DESIGNED BEAMS (DEPRESSED STRANDS)

STRUCTURE	SPAN NO	BEAM NO	BEAM TYPE	NON-STD STRAND PATTERN	PRESTRESSING STRANDS TOTAL NO	TOTAL SIZE (in)	TOTAL STRGTH f's (ksi)	TOTAL "e" ℄ (in)	TOTAL "e" END (in)	DEPRESSED NO	DEPRESSED TO (in)	CONCRETE RELEASE STRGTH f'ci (psi)	CONCRETE MINIMUM 28 DAY COMP STRGTH f'c (psi)	OPTIONAL DESIGN DESIGN LOAD COMP STRESS (TOP ℄) fct(psi)	DESIGN LOAD TENSILE STRESS (BOTT ℄) fcb(psi)	REQUIRED MINIMUM ULTIMATE MOMENT CAPACITY (ft-kips)
UNIROYAL RD	1 & 3	[redacted]	C		10	0.5	270	11.09	7.09	10	14	4000	5000	989	-1330	1545
	2	ALL [redacted]			16	0.5	270	11.34	6.84	12	18	4000	5000	1549	2009	2250

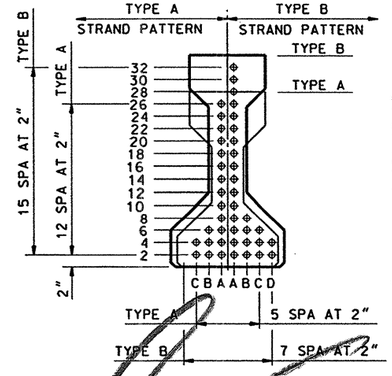

TYPE A & TYPE B BMS

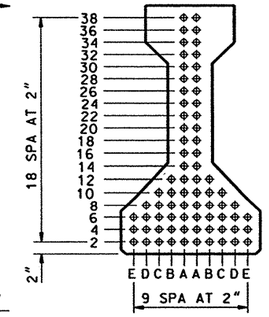

TYPE C BM

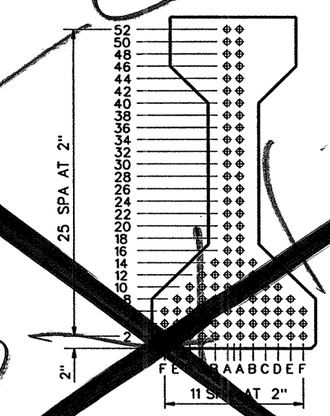

TYPE IV [redacted]
(AASHTO TYPE IV [redacted])

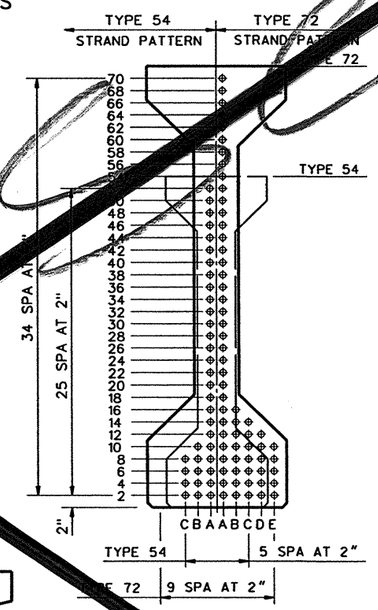

TYPE [redacted] & TYPE 72 BMS

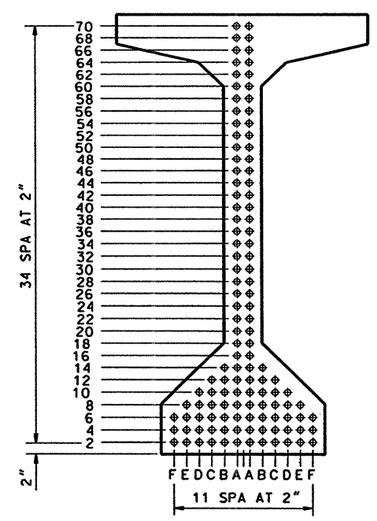

TYPE VIM BM
(AASHTO TYPE VI(MOD) BM)

NON-STANDARD STRAND PATTERNS

PATTERN	STRAND ARRANGEMENT AT ℄ OF BEAM

GENERAL NOTES:

DESIGNED IN ACCORDANCE WITH CURRENT AASHTO STANDARD SPECIFICATIONS.

ALL CONCRETE SHALL BE CLASS H. ALL REINFORCING BARS SHALL BE GRADE 60.

WHEN SHOWN ON THIS SHEET, THE FABRICATOR HAS THE OPTION OF FURNISHING EITHER THE DESIGNED DEPRESSED STRAND BEAM OR AN APPROVED OPTIONAL DESIGN. ALL OPTIONAL DESIGN SUBMITTALS AND SHOP DRAWINGS SHALL BE SIGNED, SEALED AND DATED BY A REGISTERED PROFESSIONAL ENGINEER.

OPTIONAL DESIGNS FOR BEAMS 120 FEET OR LONGER SHALL HAVE CALCULATED RESIDUAL CAMBER EQUAL TO OR GREATER THAN THAT OF THE DESIGNED BEAM.

PRESTRESS LOSSES FOR THE DESIGNED BEAMS HAVE BEEN CALCULATED FOR A RELATIVE HUMIDITY OF 65 PERCENT. OPTIONAL DESIGNS SHALL LIKEWISE CONFORM.

CERTAIN BEAMS WITH DEPRESSED STRANDS ARE SUBJECT TO CRACKING IN THE END OF THE BEAM. WHEN SUCH CRACKS OCCUR, ALL SUBSEQUENT BEAMS OF THE SAME TYPE AND STRAND PATTERN SHALL HAVE STRANDS DEBONDED IN THE FOLLOWING MANNER:

1. ALTERNATE ROWS OF DEPRESSED STRANDS SHALL BE DEBONDED FOR TWO FEET FROM EACH END OF THE BEAM.
2. ONE HALF OF THE STRAIGHT STRANDS, AS NEARLY AS POSSIBLE, SHALL BE DEBONDED FOR FOUR FEET FROM EACH END OF THE BEAM.
3. THE DEBONDING PATTERN SHALL BE SYMMETRICAL ABOUT THE VERTICAL AXIS OF THE BEAM FOR BOTH DEPRESSED AND STRAIGHT STRANDS.
4. STRANDS SHALL BE DEBONDED SO THAT THE CENTERS OF GRAVITY OF THE DEPRESSED STRANDS AND THE STRAIGHT STRANDS WILL REMAIN WITHIN ONE INCH OF THEIR ORIGINAL LOCATION.
5. STRANDS SHALL BE ENCASED IN PLASTIC TUBING ALONG ENTIRE DEBONDED LENGTH, AND ENDS OF TUBING SHALL BE SEALED WITH WATERPROOF TAPE. SPLIT PLASTIC TUBING MAY BE USED PROVIDED THE SEAM OF THE TUBING IS SUFFICIENTLY SEALED WITH WATERPROOF TAPE TO PROHIBIT GROUT INFILTRATION. WRAPPING OF STRANDS WITH TAPE TO PROVIDE DEBONDING WILL NOT BE PERMITTED.
6. REVISED SHOP DRAWINGS WILL NOT BE REQUIRED.

FOR DEPRESSED STRAND DESIGNED BEAMS, STRANDS SHALL BE LOCATED AS LOW AS POSSIBLE ON THE 2" GRID SYSTEM UNLESS A NON-STANDARD STRAND PATTERN IS INDICATED. FILL ROW "2", THEN ROW "4", THEN ROW "6", ETC., BEGINNING EACH ROW IN THE "A" POSITION AND WORKING OUTWARD UNTIL THE REQUIRED NUMBER OF STRANDS IS REACHED. ALL STRANDS IN THE "A" POSITION SHALL BE DEPRESSED, MAINTAINING THE 2" SPACING SO THAT, AT THE BEAM ENDS, THE UPPER TWO STRANDS ARE IN THE POSITION SHOWN IN THE TABLE.

STRANDS FOR THE DESIGNED BEAM SHALL BE 1/2" 270 ksi LOW RELAXATION STRANDS PRETENSIONED TO 31.0 k EACH.

HS25 LOADING — SHEET 1 OF 1

KBR
Engineered by KBR Technical Services, Inc

©2002 Texas Department of Transportation

PRESTRESSED CONCRETE BEAMS
(NON-STANDARD SPANS)

IBNS

STATE OF TEXAS — JAMES B. HORNSBY — 81485 — REGISTERED PROFESSIONAL ENGINEER

The seal appearing on this document was authorized by James B. Hornsby P.E. 81485, on January 28, 2003.

FILE:	DN: SB	CK: LAH	DW: JAG	CK: SB
ORIG DATE:	DIST	FED REG	FEDERAL AID PROJECT	SHEET
REVISIONS	22	6	NH-2002 (79)	626
	COUNTY		CONTROL	SECT	JOB	HIGHWAY
	WEBB		0018	05	062, ETC	IH 35

b70bdp04.DGN-03 HOUFILE023 \HCIVIL\CF0130\ 4/18/2003

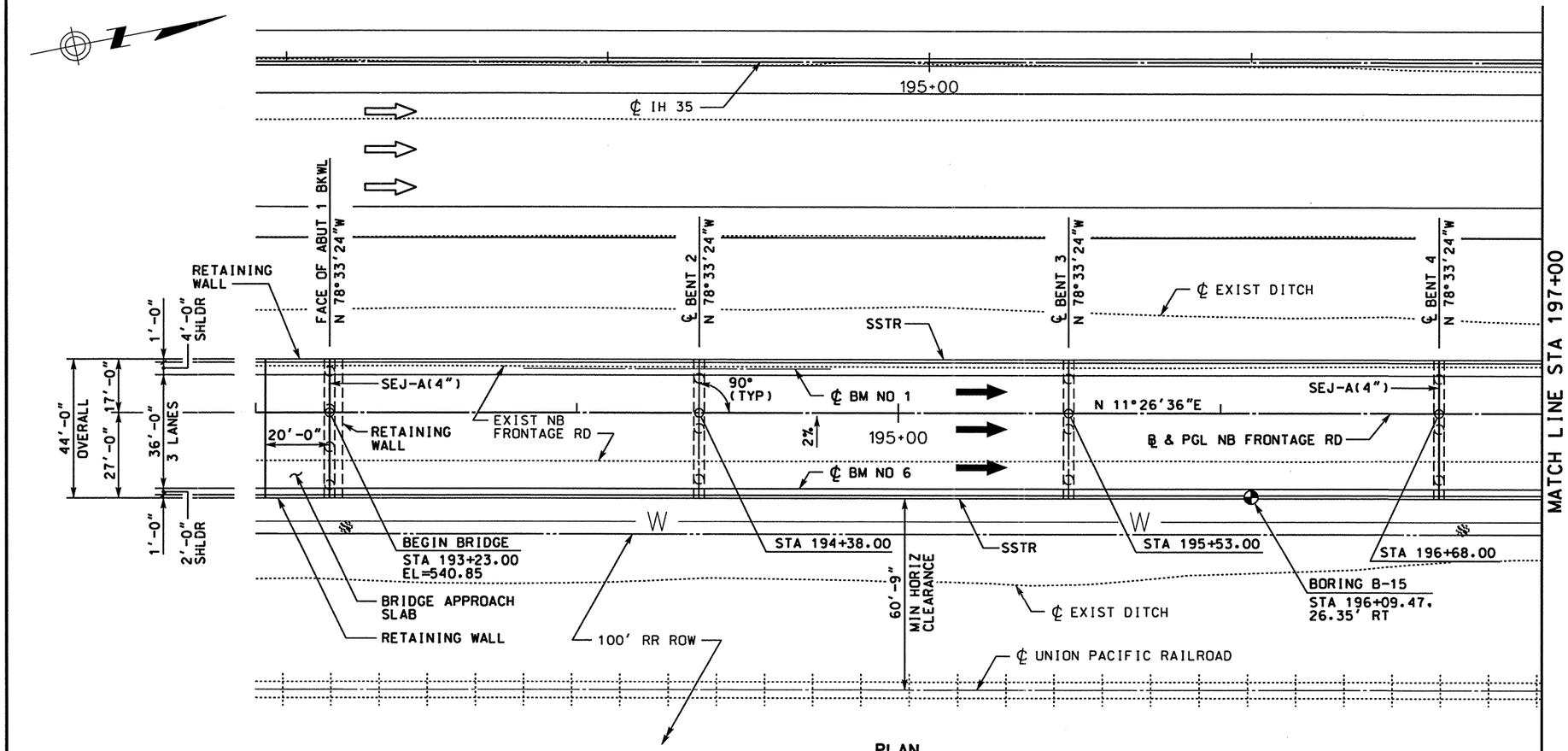

PLAN

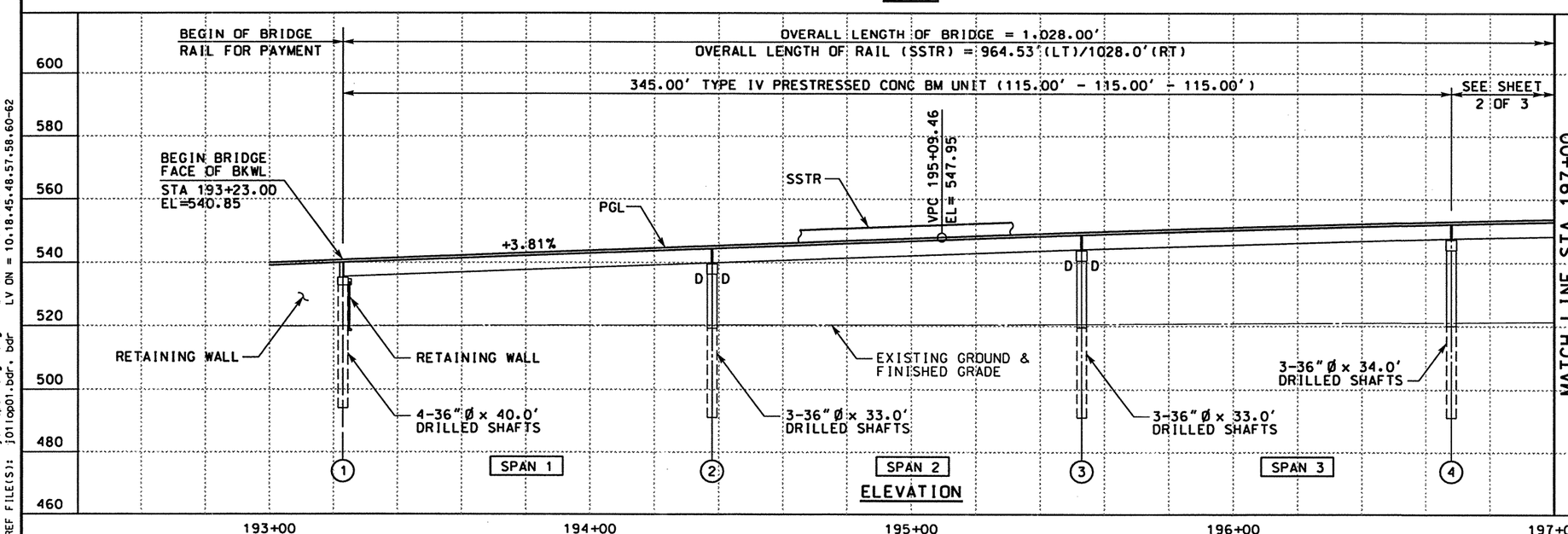

ELEVATION

GENERAL NOTES:

1. DESIGNED ACCORDING TO 1996 AASHTO STANDARD SPECIFICATION AND INTERIMS THERETO (HS25 LOADING).
2. BEAM END CONDITIONS:
   D: DENOTES A SLOTTED HOLE AT EXTERIOR BEAM END.
   BLANK: DENOTES NO HOLE AT BEAM END.
3. FOR BORING LOGS, SEE "BORING LOGS" SHEETS.
4. DRILLED SHAFTS ARE DESIGNED WITH POINT BEARING AND SKIN FRICTION.
5. SSTR FACING IH-35 TO RECEIVE CONC STAIN FINISH TO MATCH RAIL ON RETAINING WALL. (SEE SHEET 439).

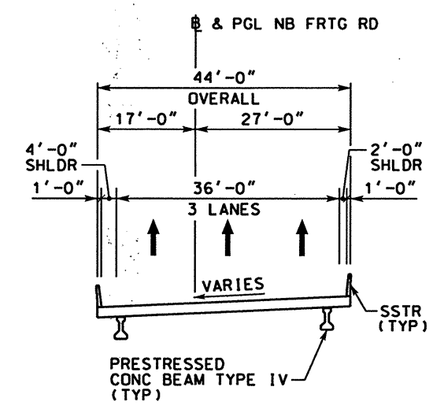

TYPICAL SUPER-STRUCTURE SECTION
SPANS 1-5 & 7-9
NTS

DESIGN SPEED: 50
ADT: 700(2003)900(2023)
RFC: URBAN FREEWAY
NBI: 22-240-0-0018-05-174

0 20 40
SCALE: 1" = 40'

STATE OF TEXAS
JAMES B. HORNSBY
81485
REGISTERED PROFESSIONAL ENGINEER

THE SEAL APPEARING ON THIS DOCUMENT WAS AUTHORIZED BY JAMES B. HORNSBY PE 81485, ON JUNE 09, 2003

KBR
Engineered by KBR Technical Services, Inc

©2003 Texas Department of Transportation

IH 35
LOOP 20 TO UNIROYAL ROAD
NB FRTG RD
@ TRES EQUIS BLVD
BRIDGE LAYOUT

SHEET 1 OF 3

FED RD DIV NO	FEDERAL AID PROJECT NO	SHEET NO
6	NH-2002 (79)	627
STATE	STATE DIST	COUNTY
TEXAS	LAREDO	WEBB
CONT	SECT / JOB	HIGHWAY NO
0018	05 / 062, ETC	IH 35

REF FILE(S): j01lop02.pro, prof LV ON = 2-9,11-43,45-63
j01lop01.bnt, bnt LV ON = 1-63
j01lop01.bck, bck LV ON = 1-22,25-63
j01lop01.alg, alg LV ON = 1-6,25-29
j01lop01.bdr, bdr LV ON = 10,18,45,48,57,58,60-62
REF FILE(S): j01lop01.uti, uti LV ON = 1-63
j01lop01.eop, eop LV ON = 1-17,19-63
j01lop01.bck, bck LV ON = 2,9,10,14,17,20,21,25,28,31
j01lop01.alg, alg LV ON = 1-6,25-29
j01lop01.bdr, bdr LV ON = 10,18,45,48,57,58,60-62

b70ppp03.dgn-12 HOUFILE023 \hcivil\cf0130\ 6/9/2003

GENERAL NOTE:

1. FOR GENERAL NOTES, SEE SHEET 1 OF 3.

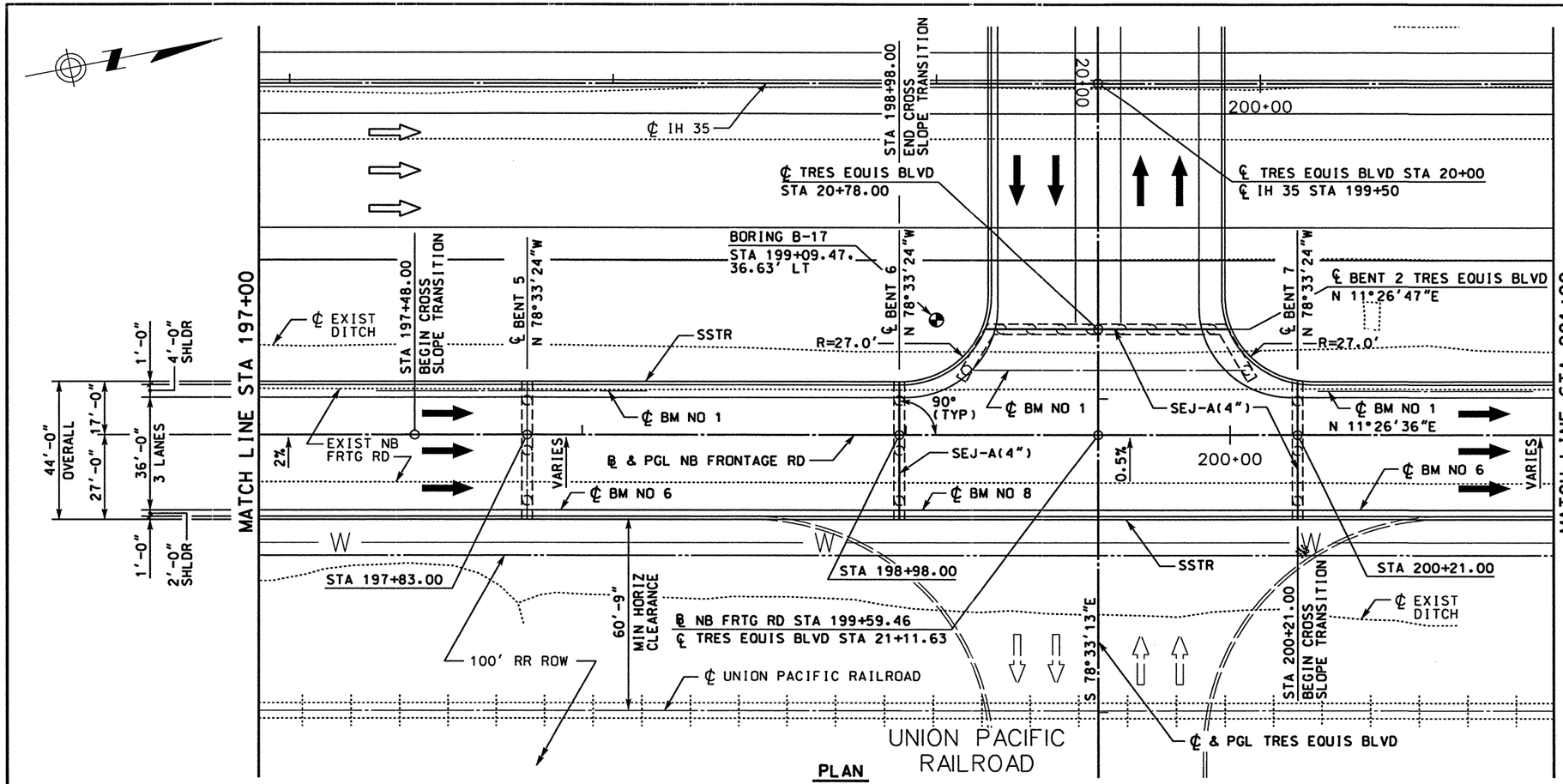

PLAN

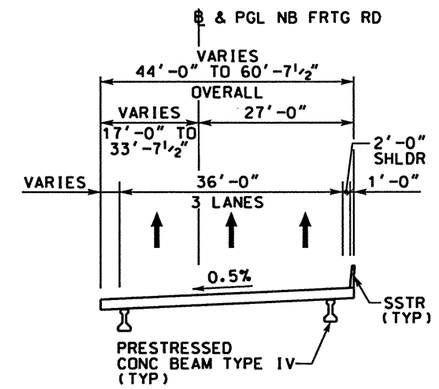

TYPICAL SUPER-STRUCTURE SECTION
SPAN 6
NTS

DESIGN SPEED: 50
ADT: 700(2003)900(2023)
RFC: URBAN FREEWAY
NBI: 22-240-0-0018-05-174

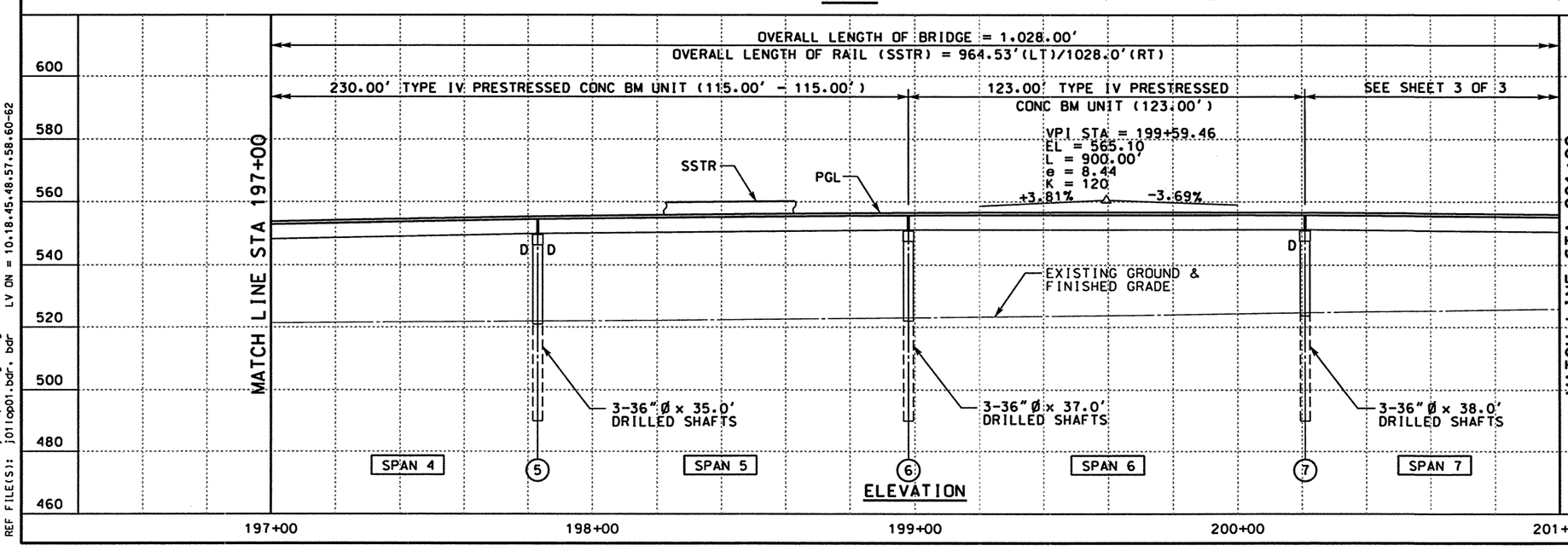

ELEVATION

SCALE: 1" = 40'

THE SEAL APPEARING ON THIS DOCUMENT WAS AUTHORIZED BY JAMES B. HORNSBY PE 81485, ON JUNE 02, 2003

STATE OF TEXAS — JAMES B. HORNSBY 81485 — REGISTERED PROFESSIONAL ENGINEER

KBR
Engineered by KBR Technical Services, Inc

©2003 Texas Department of Transportation

IH 35
LOOP 20 TO UNIROYAL ROAD
NB FRTG RD
@ TRES EQUIS BLVD
BRIDGE LAYOUT

SHEET 2 OF 3

FED RD DIV NO	FEDERAL AID PROJECT NO	SHEET NO
6	NH-2002 (79)	628
STATE	STATE DIST	COUNTY
TEXAS	LAREDO	WEBB

CONT	SECT	JOB	HIGHWAY NO
0018	05	062, ETC	IH 35

REF FILE(S): j0110p02.pro, prof LV ON = 2-9,11-43,45-63
j0110p01.bnt, bnt LV ON = 1-63
mi1oint.row, row LV ON = 1-22,25-63

REF FILE(S): j0110p01.utl, utl LV ON = 1-63
j0110p01.eop, eop LV ON = 1-17,19-63
j0110p01.bck, bck LV ON = 2,9,10,14,17,20,21,25,28,31
j0110p01.alg, alg LV ON = 1-6,25-29
j0110p01.bdr, bdr LV ON = 10,18,45,48,57,58,60-62

6/4/2003
HOUFILE023 \hcivil\cf0130\
b70ppp04.dgn-14

GENERAL NOTE:

1. FOR GENERAL NOTES, SEE SHEET 1 OF 3.

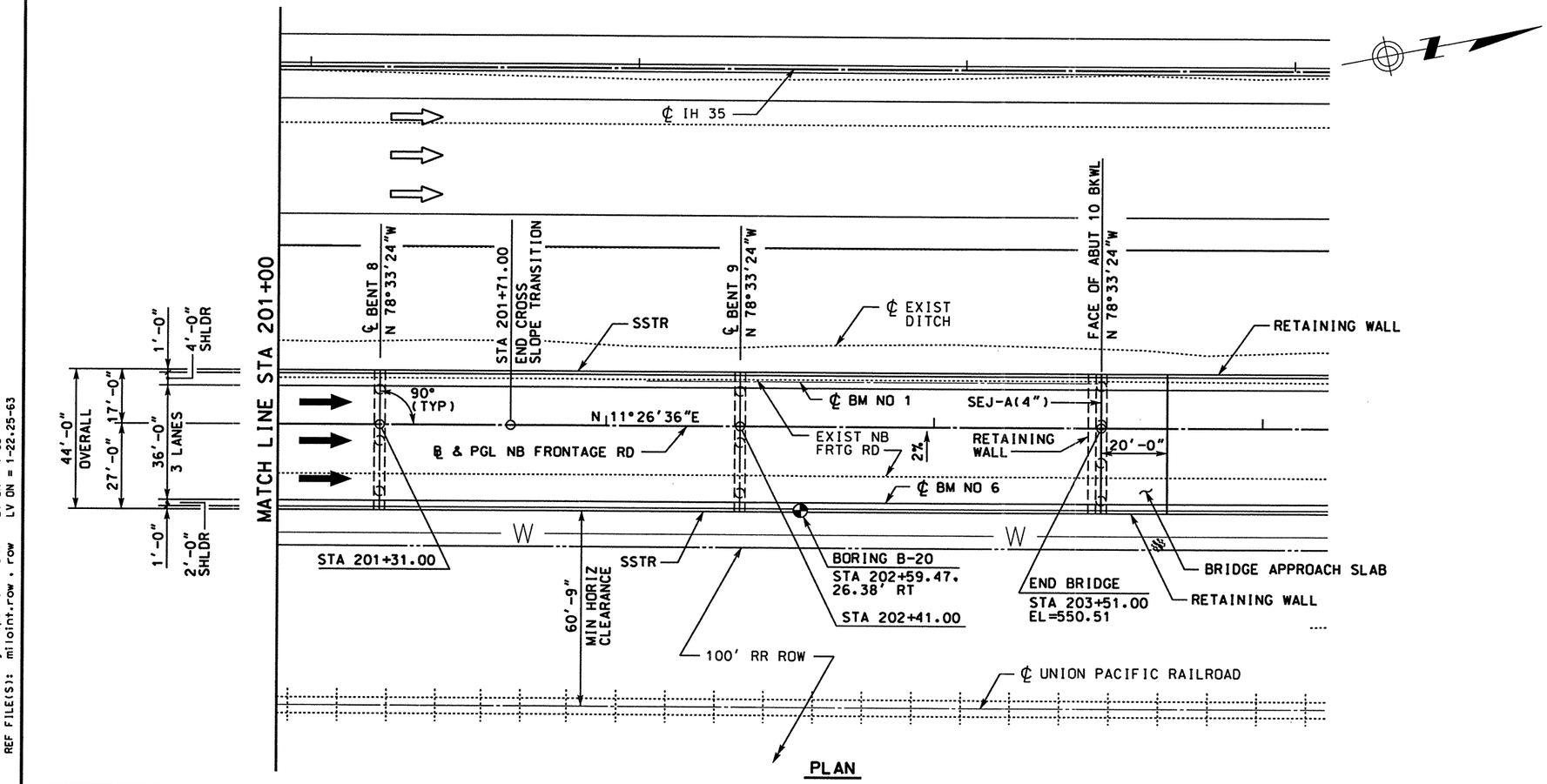

PLAN

DESIGN SPEED: 50
ADT: 700(2003)900(2023)
RFC: URBAN FREEWAY
NBI: 22-240-0-0018-05-174

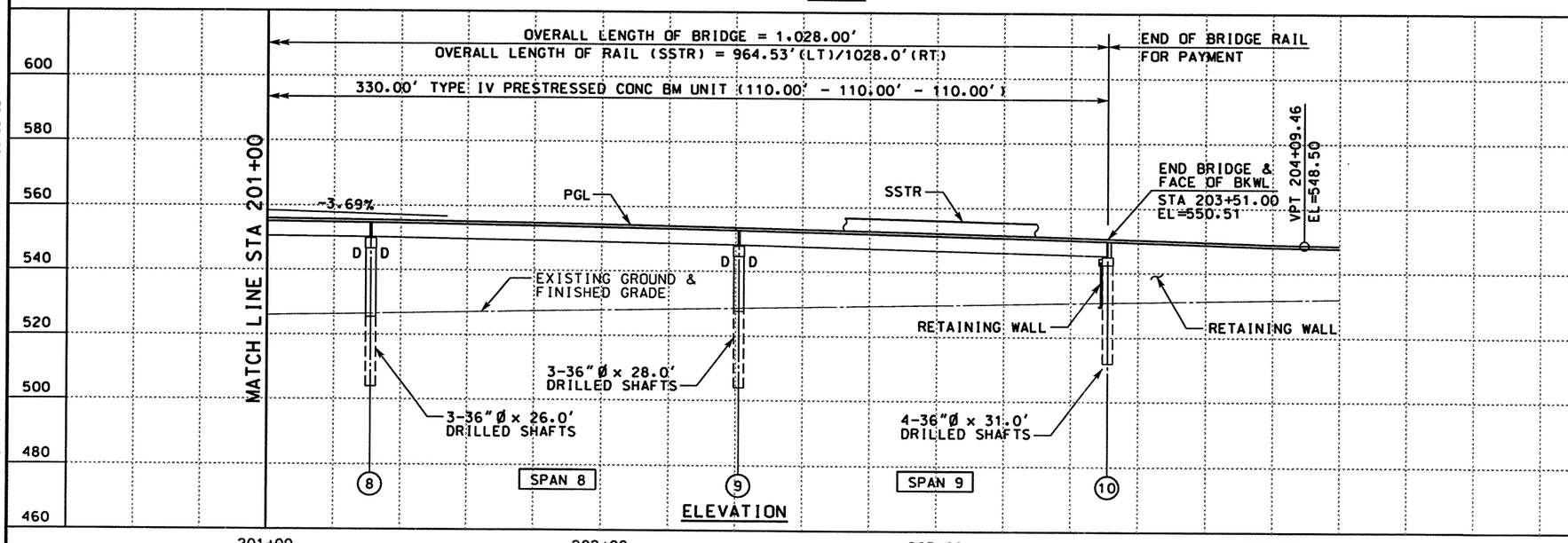

ELEVATION

0 20 40
SCALE: 1" = 40'

STATE OF TEXAS
JAMES B. HORNSBY
81485
REGISTERED PROFESSIONAL ENGINEER

THE SEAL APPEARING ON THIS DOCUMENT WAS AUTHORIZED BY JAMES B. HORNSBY PE 81485, ON JUNE 02, 2003

KBR
Engineered by KBR Technical Services, Inc

©2003 Texas Department of Transportation

IH 35
LOOP 20 TO UNIROYAL ROAD
NB FRTG RD
@ TRES EQUIS BLVD
BRIDGE LAYOUT

SHEET 3 OF 3

FED RD DIV NO	FEDERAL AID PROJECT NO		SHEET NO
6	NH-2002 (79)		629
STATE	STATE DIST		COUNTY
TEXAS	LAREDO		WEBB
CONT	SECT	JOB	HIGHWAY NO
0018	05	062, ETC	IH 35

REF FILE(S): j0110p02.pro, prof LV ON = 2-9,11-43,45-63
j0110p01.bnt, bnt LV ON = 1-63
j0110p01.row, row LV ON = 1-22,25-63
REF FILE(S): j0110p01.utl, utl LV ON = 1-63
j0110p01.eop, eop LV ON = 1-17,19-63
j0110p01.bck, bck LV ON = 2,9,10,14,17,20,21,25,28,31
j0110p01.alg, alg LV ON = 1-6,25-29
j0110p01.bdr, bdr LV ON = 10,18,45,48,57,58,60-62

b70ppp05.dgn-09 HOUFILE023 \hchvil\cf0130\ 6/4/2003

SUMMARY OF BRIDGE QUANTITIES

DESCRIPTION	416-0535 DRILLED SHAFTS (36 IN)	420-0513 CL C CONC (ABUT)	420-0514 CL C CONC (BENT)	422-0505 REINF CONC SLAB *	425-0507 PRESTR CONC BEAM (TY IV)	428-0501 CONC SURF TREAT	440-XXXX REINF STEEL *	450-0526 RAIL SSTR	454-0503 SEALED EXP JOINT (4 IN)	CONC. STAIN FINISH *
	LF	CY	CY	SF	LF	SY	LB	LF	LF	SY
2-ABUTMENTS	284	39.6					6988			
8-INTERIOR BENTS	792		235.8				85081			
9 PRESTR CONC BM UNITS				46755	6362.95	4974	303908	1992.5	289	332
TOTALS	1076	39.6	235.8	46755	6362.95	4974	395977	1992.5	289	332

* FOR CONTRACTORS INFORMATION ONLY

BEARING SEAT ELEVATIONS

	BEAM 1	BEAM 2	BEAM 3	BEAM 4	BEAM 5	BEAM 6	BEAM 7	BEAM 8
BENT 1 (FWD)	534.927	535.079	535.231	535.383	535.535	535.687		
BENT 2 (BK)	539.256	539.408	539.560	539.712	539.864	540.016		
(FWD)	539.310	539.462	539.614	539.766	539.918	540.070		
BENT 3 (BK)	543.561	543.713	543.865	544.017	544.169	544.321		
(FWD)	543.610	543.762	543.914	544.066	544.218	544.370		
BENT 4 (BK)	546.982	547.134	547.286	547.438	547.590	547.742		
(FWD)	547.142	547.294	547.446	547.598	547.750	547.902		
BENT 5 (BK)	549.474	549.600	549.726	549.852	549.977	550.103		
(FWD)	549.497	549.622	549.747	549.872	549.997	550.122		
BENT 6 (BK)	550.851	550.890	550.928	550.967	551.005	551.044		
(FWD)	550.552*	550.860	550.892	550.924	550.955	550.987	551.019	551.050
BENT 7 (BK)	550.532*	550.934	550.965	550.997	551.029	551.060	551.092	551.124
(FWD)	550.926	550.965	551.003	551.042	551.080	551.119		
BENT 8 (BK)	549.784	549.906	550.028	550.149	550.271	550.393		
(FWD)	549.763	549.886	550.009	550.131	550.254	550.377		
BENT 9 (BK)	547.725	547.877	548.029	548.181	548.333	548.485		
(FWD)	547.693	547.845	547.997	548.149	548.301	548.453		
BENT 10 (BK)	544.713	544.865	545.017	545.169	545.321	545.473		

* BEAM 1 OF SPAN 6 SITS ON BENT 2 OF TRES EQUIS BLVD BRIDGE

See next

STATE OF TEXAS
JAMES B. HORNSBY
81485
REGISTERED PROFESSIONAL ENGINEER

THE SEAL APPEARING ON THIS DOCUMENT WAS AUTHORIZED BY JAMES B. HORNSBY PE 81485, ON JUNE 02, 2003

KBR
Engineered by KBR Technical Services, Inc

©2003 Texas Department of Transportation

IH 35
LOOP 20 TO UNIROYAL ROAD
NB FRTG RD
@ TRES EQUIS BLVD
QUANTITY SUMMARY/
BEARING SEAT ELEVATIONS

SHEET 1 OF 1

FED RD DIV NO	FEDERAL AID PROJECT NO		SHEET NO
6	NH-2002 (79)		630
STATE	STATE DIST		COUNTY
TEXAS	LAREDO		WEBB
CONT	SECT	JOB	HIGHWAY NO
0018	05	062, ETC	IH 35

6/4/2003
HOUFILE023 \hcivil\cf0130\
b36qsp19.dgn-07

REF FILE(S): j011op01.bdr, bdr LV ON = 47,57,58,60-62

SUMMARY OF BRIDGE QUANTITIES

DESCRIPTION	416-0535 DRILLED SHAFTS (36 IN)	420-0513 CL C CONC (ABUT)	420-0514 CL C CONC (BENT)	422-0505 REINF CONC SLAB *	425-0507 PRESTR CONC BEAM (TY IV)	428-0501 CONC SURF TREAT	440-XXXX REINF STEEL *	450-0526 RAIL SSTR	454-0503 SEALED EXP JOINT (4 IN)	ARCH CONC STAIN FINISH *
	LF	CY	CY	SF	LF	SY	LB	LF	LF	SY
2-ABUTMENTS	284	39.6					6988			
8-INTERIOR BENTS	792		266.2				57291			
9-PRESTR CONC BM UNITS				46755	6362.95	4974	303908	1992.5	289	332
TOTALS	1076	39.6	266.2	46755	6362.95	4974	368187	1992.5	289	332

* FOR CONTRACTORS INFORMATION ONLY

1 1

BEARING SEAT ELEVATIONS

	BEAM 1	BEAM 2	BEAM 3	BEAM 4	BEAM 5	BEAM 6	BEAM 7	BEAM 8
BENT 1 (FWD)	534.927	535.079	535.231	535.383	535.535	535.687		
BENT 2 (BK)	539.256	539.408	539.560	539.712	539.864	540.016		
(FWD)	539.310	539.462	539.614	539.766	539.918	540.070		
BENT 3 (BK)	543.561	543.713	543.865	544.017	544.169	544.321		
(FWD)	543.610	543.762	543.914	544.066	544.218	544.370		
BENT 4 (BK)	546.982	547.134	547.286	547.438	547.590	547.742		
(FWD)	547.142	547.294	547.446	547.598	547.750	547.902		
BENT 5 (BK)	549.474	549.600	549.726	549.852	549.977	550.103		
(FWD)	549.497	549.622	549.747	549.872	549.997	550.122		
BENT 6 (BK)	550.851	550.890	550.928	550.967	551.005	551.044		
(FWD)	550.552*	550.860	550.892	550.924	550.955	550.987	551.019	551.050
BENT 7 (BK)	550.532*	550.934	550.965	550.997	551.029	551.060	551.092	551.124
(FWD)	550.926	550.965	551.003	551.042	551.080	551.119		
BENT 8 (BK)	549.784	549.906	550.028	550.149	550.271	550.393		
(FWD)	549.763	549.886	550.009	550.131	550.254	550.377		
BENT 9 (BK)	547.725	547.877	548.029	548.181	548.333	548.485		
(FWD)	547.693	547.845	547.997	548.149	548.301	548.453		
BENT 10 (BK)	544.713	544.865	545.017	545.169	545.321	545.473		

* BEAM 1 OF SPAN 6 SITS ON BENT 2 OF TRES EQUIS BLVD BRIDGE

DATE	BY	REV	REVISION
05/13/04	RB	1	REV BENT QUAN

STATE OF TEXAS RAYMOND C. BARKER 44988 REGISTERED PROFESSIONAL ENGINEER

THE SEAL APPEARING ON THIS DOCUMENT WAS AUTHORIZED BY RAYMOND C. BARKER PE 44988, ON MAY 13, 2004

Raymond C. Barker

KBR

Engineered by KBR Technical Services, Inc

©2003 Texas Department of Transportation

IH 35
LOOP 20 TO UNIROYAL ROAD
NB FRTG RD
@ TRES EQUIS BLVD
QUANTITY SUMMARY/
BEARING SEAT ELEVATIONS

SHEET 1 OF 1

FED RD DIV NO	FEDERAL AID PROJECT NO		SHEET NO
6	NH-2002 (79)		630
STATE	STATE DIST		COUNTY
TEXAS	LAREDO		WEBB
CONT	SECT	JOB	HIGHWAY NO
0018	05	062. ETC	IH 35

REF FILE(S): j011op01.bdr. bdr LV DN = 47.57.58.60-62

5/13/2004 HOUFILE023 \hcivil\cf0130\ b36qsp19.dgn-08

PROJECT: IH-35 MAIN LANE WIDENING, LAREDO, TEXAS BORING B-15

DATE 2/13/01 TYPE 4" FLIGHT AUGER LOCATION STA. 196+00:138'RT

SHEAR STRENGTH, TSF: ○ POCKET PENETROMETER △ CONFINED COMPRESSION ● UNCONFINED COMPRESSION □ TORVANE (0.5 1 1.5 2)

DEPTH IN FEET	DESCRIPTION Elevation:519.16'	THD 1st 6"	THD 2nd 6"	M.C. %	U.D.W. PCF	-200 MESH	LIQUID LIMIT	PLASTIC LIMIT	PLASTICITY INDEX
0	Fill: Stiff, tan sandy clay with gravel			15, 20	105	66	30	15	15
	Stiff, tan, Sandy Clay (CL), with ferrous nodules	6	6	15, 15	113				
	-soft @ 4'-6'	13	14	10		38	32	16	16
12	-very stiff @ 6'-8' -stiff @ 8'-10' -w/gravel pockets @ 9' -w/calcareous nodules & gravel & chert @ 11'	11	12	19, 20, 24, 24	106, 100	84	61, 71	22, 28	39, 43
	Stiff, light gray & tan, Clay (CH), with calcareous nodules pockets	33	50	13, 18, 19	112	91	44	22	22
24	Very stiff, light gray & tan, Sandy Clay (CL) w/ clayey sand seams	50/5"	50/4.5"	18, 17			53, 53	20, 20	33, 33
		50/2.5"	50/0.5"	16, 20		60	37	17	20
36	Hard, light gray & tan, Silty Clay (CL), with calcareous nodules & sand partings	50/0.5"	50/0"	17, 19, 17			53	21	32
	Hard, tan & light gray, Clay (CH), with ferrous nodules	50/0"	50/0"	18, 12			43	20	23
	Hard, gray Shale	50/.5"	50/0"	9, 11, 13			36	17	19
48	Hard, reddish brown, Sandy Clay (CL), with lenses of shale	50/0"	50/0"	14, 17					
	Tan Sandy Clay (CL)								
	Very hard, reddish brown & tan, Clay (CH) w/traces of shale	50/0"	50/0"	15, 21			37	17	20
60	Gray Shale, with sandy clay pockets & ferrous nodules -very hard @ 38' -very hard layer @ 42', switched to rock bit -switched back to normal bit @ 48' -hard layer @ 48'-49', switched back to rock bit @ 48'	50/0"	50/0"	15, 15					
		50/0"	50/0"	23, 23			20	12	8
72		50/0"	50/0"						
	Bottom of hole @ 70'								

BORING DRILLED TO 70 FEET (21.34) METER WITHOUT DRILLING FLUID

WATER ENCOUNTERED AT 32 FEET (9.75 METER) WHILE DRILLING

WATER LEVEL AT caved FEET (____ METER) AFTER 3 HOURS

DRILLED BY JH CHECKED BY PST LOGGED BY JH

PROJECT: IH-35: LOOP 20 TO UNIROYAL ROAD BORING B-17

DATE 2/15/01 TYPE 4" FLIGHT AUGER LOCATION STA. 199+00:75'RT

SHEAR STRENGTH, TSF: ○ POCKET PENETROMETER △ CONFINED COMPRESSION ● UNCONFINED COMPRESSION □ TORVANE (0.5 1 1.5 2)

DEPTH IN FEET	DESCRIPTION Elevation:523.4'	THD 1st 6"	THD 2nd 6"	M.C. %	U.D.W. PCF	-200 MESH	LIQUID LIMIT	PLASTIC LIMIT	PLASTICITY INDEX
0	Fill: gray clayey sand with fine gravel, clay lumps			15, 17	109	26	29	16	13
		14	16	15, 16	108	51	33	16	17
	Stiff to hard, tan, Sandy Clay (CL), with ferrous & calcareous nodules	36	50/4"	4, 10		14, 37	18, 24	12, 15	6, 9
12	Dense, tan Silty Sand with clay, cemented (SM-GM) -49% gravel; 37% sand; 14% fines	36	50/5.5"	18, 21		82	54	22	32
	Hard, tan, Sandy Clay (CL), with ferrous & calcareous nodules, with clayey sand seams	42	50/4.5"	21, 18, 20, 19	103, 103, 110	73, 84	45, 50	19, 20	26, 30
24	Hard, tan, Clay with sand (CH), with ferrous & calcareous nodules	50/5"	50/4"	16, 14		54, 80	22, 42	22, 20	32, 22
		50/4"	50/3"	19, 18	108	88	47	18	29
36	Hard, gray & tan, Sandy Clay (CL), with ferrous & calcareous nodules -w/ sand seam @ 16'-18'	50/3.5"	50/2"	20, 16		68	31	17	14
	Hard, tan, Clay, sandy (CH), with ferrous & calcareous nodules	50/2"	50/0.5"	27, 18, 18		59	34	16	18
	Hard to very hard, tan, Sandy Clay (CL), with sand seams -gray @ 30' -tan & light gray @ 34' -tan @ 36'	50/0.5"	50/0"	19, 21		75	42	20	22
48		50/0.5"	50/0.2"	12, 13					
	Very hard, dark gray, Shale	50/0"	50/0.2"	23, 27					
60		50/0"	50/0"	21					
		50/0"	50/0"	16, 6					
72		50/0"	50/0"						
	Bottom of hole @ 70'								

BORING DRILLED TO 75 FEET (22.86) METER WITHOUT DRILLING FLUID

WATER ENCOUNTERED AT ____ FEET (____ METER) WHILE DRILLING

WATER LEVEL AT ____ FEET (____ METER) AFTER ____ HOURS

DRILLED BY JH CHECKED BY PST LOGGED BY JH

STATE OF TEXAS JAMES B. HORNSBY 81485 REGISTERED PROFESSIONAL ENGINEER

THE SEAL APPEARING ON THIS DOCUMENT WAS AUTHORIZED BY JAMES B. HORNSBY PE 81485, ON APRIL 18, 2003

KBR

Engineered by KBR Technical Services, Inc

©2003 Texas Department of Transportation

IH 35
LOOP 20 TO UNIROYAL ROAD
NB FRTG RD
@ TRES EQUIS BLVD
SOIL BORINGS

SHEET 1 OF 2

FED RD DIV NO	FEDERAL AID PROJECT NO	SHEET NO
6	NH-2002 (79)	631
STATE	STATE DIST	COUNTY
TEXAS	LAREDO	WEBB
CONT / SECT / JOB		HIGHWAY NO
0018 / 05 / 062, ETC		IH 35

REF FILE(S): j01lop01.bdr, bdr LV ON = 5.45.57.60-63

b70bjp03.dgn-02 HOUFILE023 \hciviln\cf0130\ 4/18/2003

PROJECT: IH-35 MAIN LANE WIDENING, LAREDO, TEXAS BORING B-20

DATE 2/14/01 TYPE 4" FLIGHT AUGER LOCATION STA. 202+50:138'RT

SHEAR STRENGTH, TSF

○ POCKET PENETROMETER
△ CONFINED COMPRESSION
● UNCONFINED COMPRESSION
□ TORVANE

0.5 1 1.5 2

DEPTH IN FEET	SYMBOL	CORES	DESCRIPTION Elevation:527.14'	THD 1st 6"	THD 2nd 6"	M.C. %	U.D.W. PCF	-200 MESH	LIQUID LIMIT	PLASTIC LIMIT	PLASTICITY INDEX
0			Fill: tan Sandy Gravel with clay and silt (58% gravel; 26% sand; 16% fines)			10		14			
						10					
				14	21	24		46			
						25		61	47	20	27
			-slightly compact, silty, with fine gravel @ 4'	15	24	18					
12			Tan Sandy Clay (CL), with calcareous nodules			18					
						18	107				
			-stiff @ 8'-10'	50/2"	50/1"	18		86	45	20	25
			-hard, light tan, w/ traces of shale@ 10'			17	109				
						19			44	20	24
			Very hard, tan, Silty Clay (CL), w/traces of shale & mica lenses	50/4"	50/1.5"	18	116		45	20	25
						16					
24			Hard, tan & reddish brown, Sandy Clay (CL)	50/1"	50/.5"	25			47	20	27
						17	103				
			Hard, Shale	50/.5"	50/0"	27					
			Very hard, tan & reddish brown, Silty Clay (CL) with traces of shale			18			57	23	34
36			Gray Shale, with tan sandy clay pockets, light gray sandstone, mica deposits	50/0"	50/0"	18			44	20	24
						12					
				50/0"	50/0"	16					
			-very hard								
				50/.5"	50/0"	16		67	31	16	15
48						10					
				50/.5"	50/0"	17		60	31	16	15
						14					
				50/0"	50/0"	13					
						19					
60				50/0"	50/0"	22			48	20	28
						12					
				50/0"	50/0"	15		63	53	22	31
						17					
				50/0"	50/0"						
72			Bottom of hole @ 70'								

BORING DRILLED TO 70 FEET (21.34) METER WITHOUT DRILLING FLUID

WATER ENCOUNTERED AT 24 FEET (7.32 METER) WHILE DRILLING

WATER LEVEL AT 65 FEET (19.81 METER) AFTER 5 HOURS

DRILLED BY JH CHECKED BY PST LOGGED BY JH

STATE OF TEXAS
JAMES B. HORNSBY
81485
REGISTERED PROFESSIONAL ENGINEER

THE SEAL APPEARING ON THIS DOCUMENT WAS AUTHORIZED BY JAMES B. HORNSBY PE 81485, ON APRIL 18, 2003

KBR

Engineered by KBR Technical Services, Inc

©2003 Texas Department of Transportation

IH 35
LOOP 20 TO UNIROYAL ROAD
NB FRTG RD
@ TRES EQUIS BLVD
SOIL BORINGS

SHEET 2 OF 2

FED RD DIV NO	FEDERAL AID PROJECT NO	SHEET NO
6	NH-2002 (79)	632
STATE	STATE DIST	COUNTY
TEXAS	LAREDO	WEBB
CONT	SECT / JOB	HIGHWAY NO
0018	05 / 062, ETC	IH 35

REF FILE(S): j011op01.bdr, bdr LV ON = 5,45,57,60-63

b70bjp04.dgn-02 HOUFILE023 \hcivil\cf0130\ 4/18/2003

DS	TOP OF DS ELEV
1	532.322
2	532.562
3	532.802
4	533.042

TABLE OF ESTIMATED QUANTITIES

BAR	NO	SIZE	LENGTH	WEIGHT
A	8	11	41'-6"	1764
H	10	5	41'-6"	433
S	56	5	10'-10"	623
U	4	6	7'-11"	48
V	43	5	14'-1"	632
† REINFORCING STEEL			LB	3500
CLASS "C" CONCRETE (ABUT)			CY	19.9
DRILLED SHAFT (36"Ø)			FT	160

† FOR CONTRACTOR'S INFORMATION ONLY.

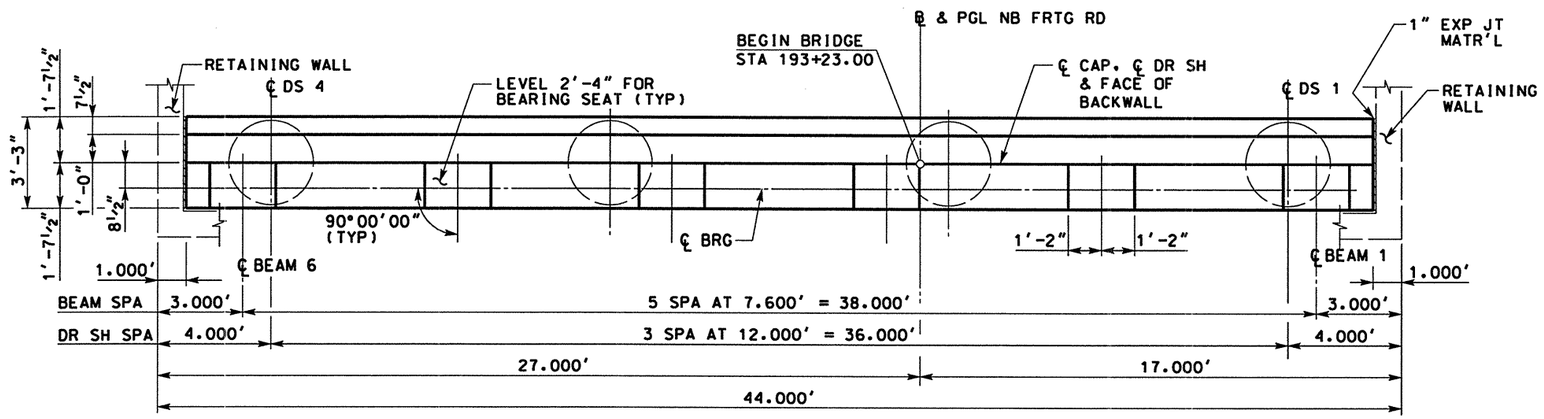

PLAN

SCALE: 3/16" = 1'-0"

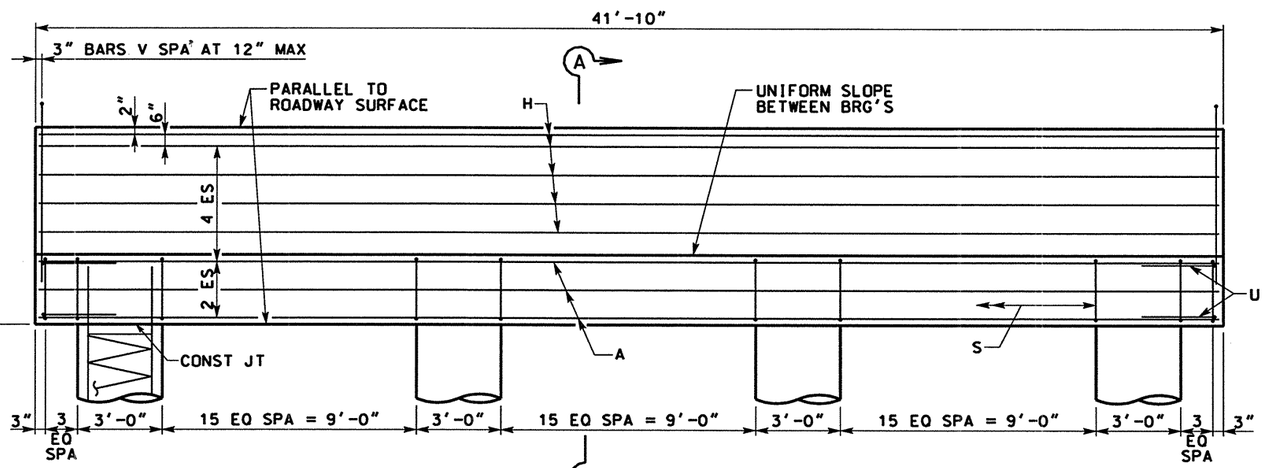

ELEVATION

SCALE: 3/16" = 1'-0"

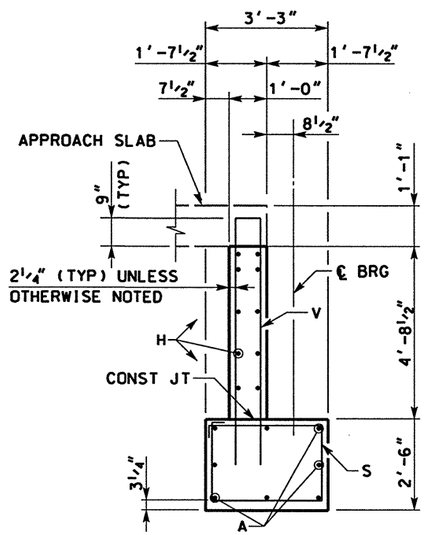

SECTION A-A

SCALE: ¼" = 1'-0"

NOTES:

1. DESIGNED ACCORDING TO AASHTO 1996 STANDARD AND CURRENT INTERIM SPECIFICATIONS.
2. CALCULATED FOUNDATION LOADS - CAP DRILLED SHAFTS = 110 TONS/DRILLED SHAFT.
3. ALL DIMENSIONS TO THE REINFORCING STEEL ARE TO THE ℄ OF THE BAR UNLESS OTHERWISE NOTED.
4. ALL REINFORCING STEEL IN DRILLED SHAFT IS INCLUDED IN PRICE BID FOR DRILLED SHAFTS.

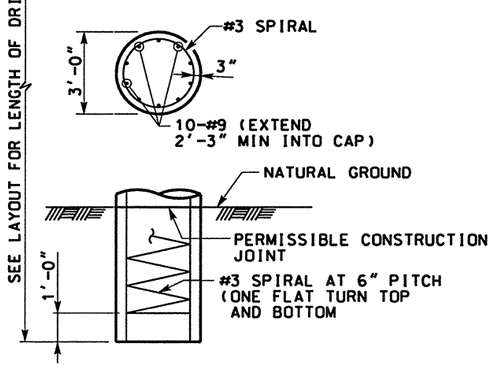

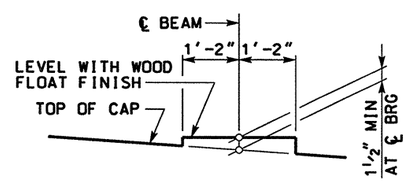

BEARING SEAT DETAIL

(BEARING SURFACE ~~SHALL BE~~ CLEAN AND FREE OF ALL LOOSE MATERIAL BEFORE PLACING BEARING PAD.)

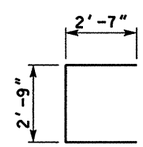

BARS U

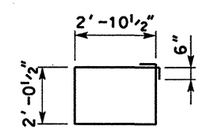

BARS S

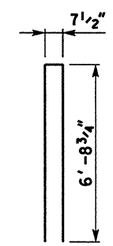

BARS V

HS25 LOADING

STATE OF TEXAS — JAMES B. HORNSBY — 81485 — REGISTERED PROFESSIONAL ENGINEER

THE SEAL APPEARING ON THIS DOCUMENT WAS AUTHORIZED BY JAMES B. HORNSBY PE 81485, ON JUNE 02, 2003

KBR

Engineered by KBR Technical Services, Inc

©2003 Texas Department of Transportation

IH 35
LOOP 20 TO UNIROYAL ROAD

NB FRTG RD @
TRES EQUIS BLVD
ABUTMENT NO 1

SHEET 1 OF 1

FED RD DIV NO	FEDERAL AID PROJECT NO		SHEET NO
6	NH-2002 (79)		633
STATE	STATE DIST		COUNTY
TEXAS	LAREDO		WEBB
CONT	SECT	JOB	HIGHWAY NO
0018	05	062, ETC	IH 35

6/5/2003

HOUFILE023 \HCIVIL\CF0130\ b70bdp05.dgn-08

REF FILE(S): J01LOP01.BDR, BDR LV ON = 48,57,58,60-62

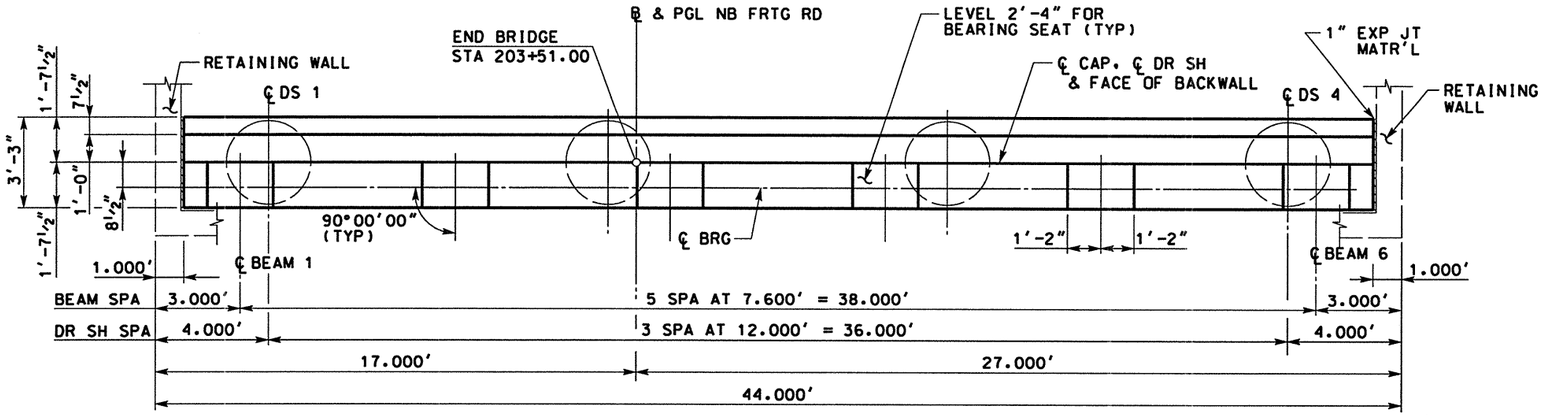

PLAN

SCALE: 3/16" = 1'-0"

DS	TOP OF DS ELEV
1	542.108
2	542.348
3	542.588
4	542.828

TABLE OF ESTIMATED QUANTITIES

BAR	NO	SIZE	LENGTH	WEIGHT
A	8	11	41'-6"	1764
H	10	5	41'-6"	433
S	56	5	10'-10"	623
U	4	6	7'-11"	48
V	43	5	13'-10"	620
† REINFORCING STEEL			LB	3488
CLASS "C" CONCRETE (ABUT)			CY	19.7
DRILLED SHAFT (36"Ø)			FT	124

† FOR CONTRACTOR'S INFORMATION ONLY.

NOTES:

1. DESIGNED ACCORDING TO AASHTO 1996 STANDARD AND CURRENT INTERIM SPECIFICATIONS.
2. CALCULATED FOUNDATION LOADS - CAP DRILLED SHAFTS = 110 TONS/DRILLED SHAFT.
3. ALL DIMENSIONS TO THE REINFORCING STEEL ARE TO THE ℄ OF THE BAR UNLESS OTHERWISE NOTED.
4. ALL REINFORCING STEEL IN DRILLED SHAFT IS INCLUDED IN PRICE BID FOR DRILLED SHAFTS.

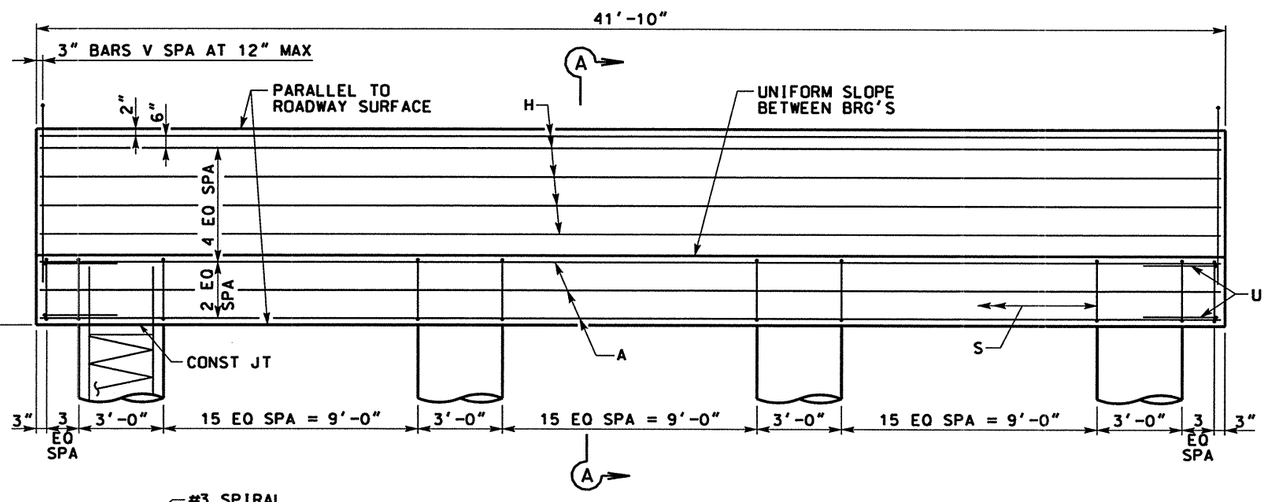

ELEVATION

SCALE: 3/16" = 1'-0"

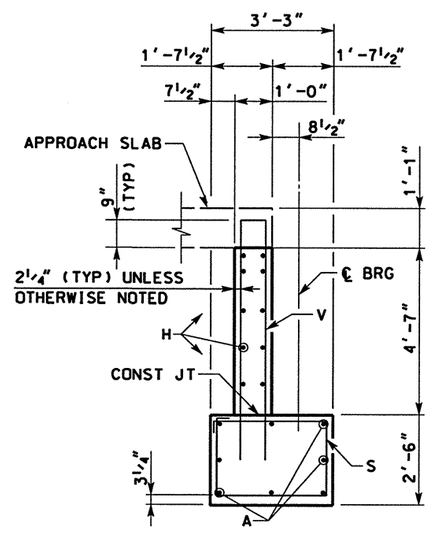

SECTION A-A

SCALE: ¼" = 1'-0"

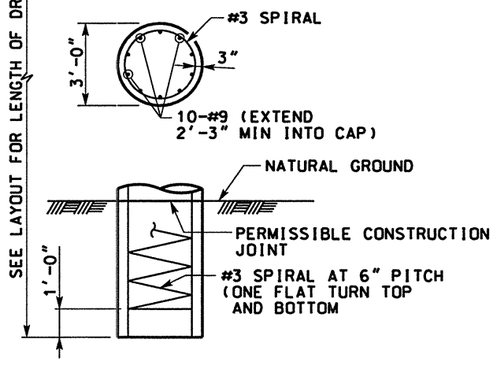

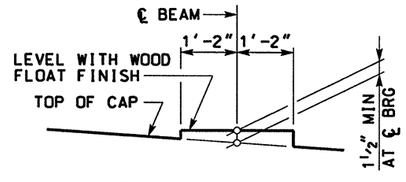

BEARING SEAT DETAIL

(BEARING SURFACE ~~SHALL BE~~ CLEAN AND FREE OF ALL LOOSE MATERIAL BEFORE PLACING BEARING PAD.)

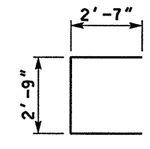

BARS U

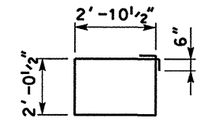

BARS S

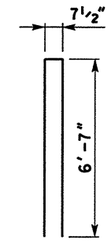

BARS V

HS25 LOADING

STATE OF TEXAS
JAMES B. HORNSBY
81485
REGISTERED PROFESSIONAL ENGINEER

THE SEAL APPEARING ON THIS DOCUMENT WAS AUTHORIZED BY JAMES B. HORNSBY PE 81485, ON JUNE 02, 2003

KBR
Engineered by KBR Technical Services, Inc

©2003 Texas Department of Transportation

IH 35
LOOP 20 TO UNIROYAL ROAD
NB FRTG RD @
TRES EQUIS BLVD
ABUTMENT NO 10

SHEET 1 OF 1

FED RD DIV NO	FEDERAL AID PROJECT NO		SHEET NO
6	NH-2002 (79)		634
STATE	STATE DIST		COUNTY
TEXAS	LAREDO		WEBB
CONT	SECT	JOB	HIGHWAY NO
0018	05	062, ETC	IH 35

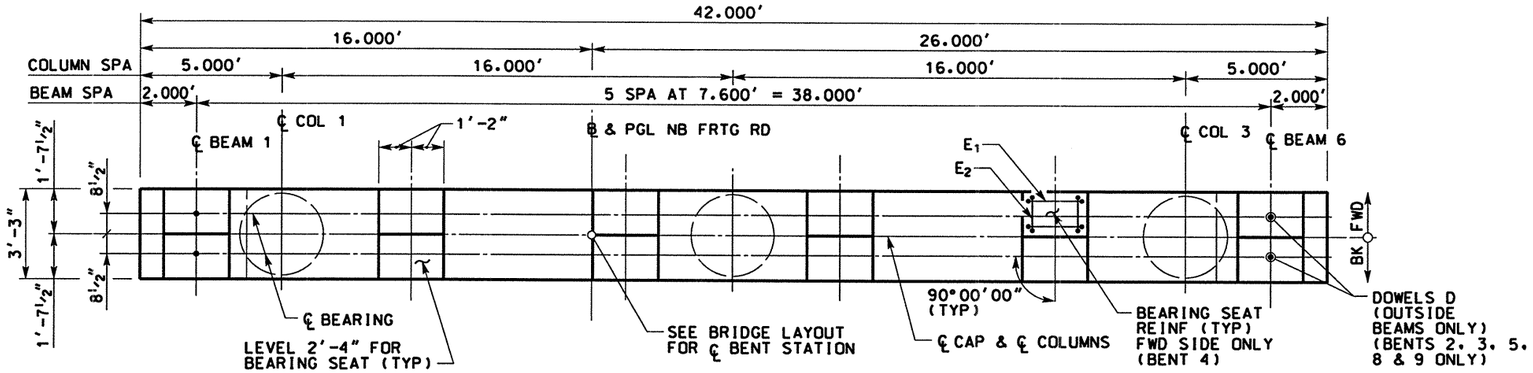

PLAN

SCALE: 3/16" = 1'-0"

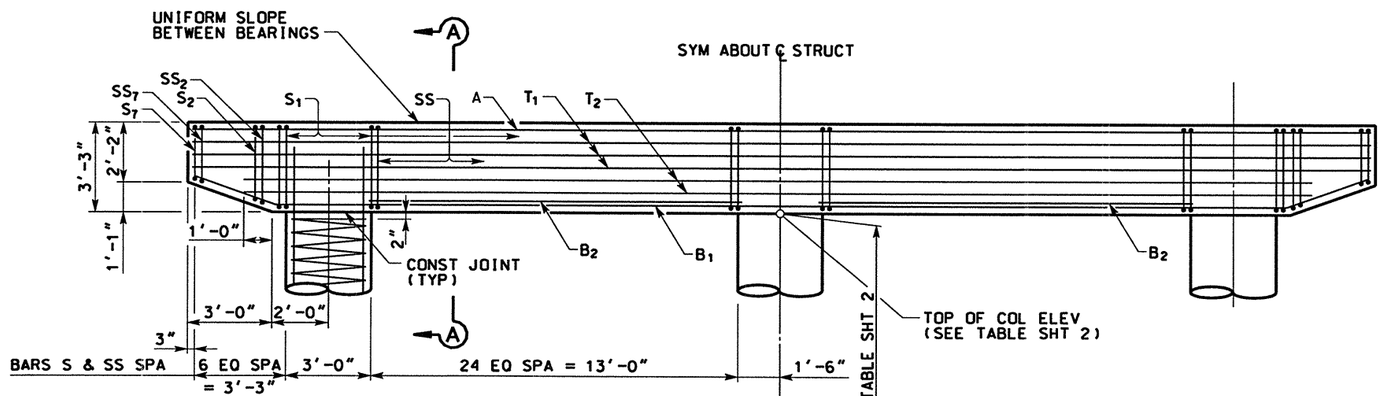

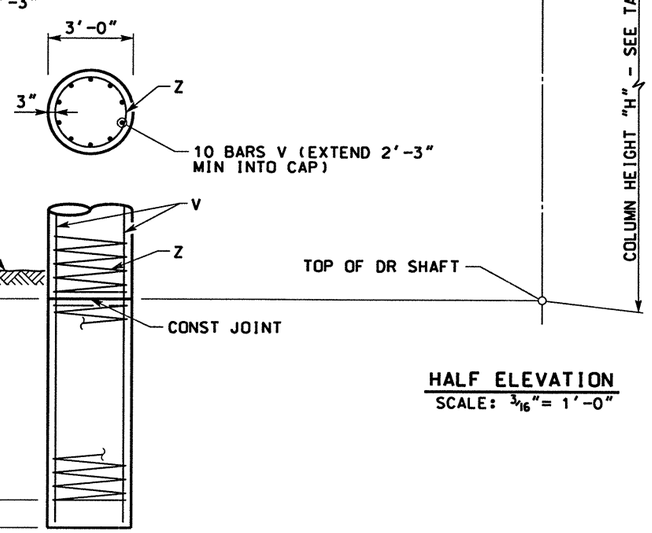

HALF ELEVATION

SCALE: 3/16" = 1'-0"

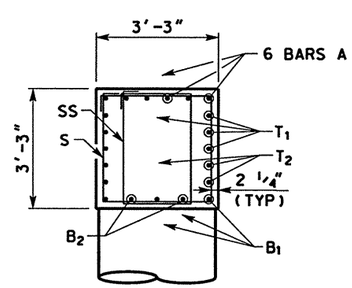

SECTION A-A

SCALE: 1/4" = 1'-0"

NOTES:

1. DESIGNED ACCORDING TO AASHTO 1996 STANDARDS AND INTERIM SPECIFICATIONS.
2. ALL DIMENSIONS TO THE REINFORCING STEEL ARE TO ℄ OF BAR UNLESS NOTED OTHERWISE.
3. CALCULATED DRILLED SHAFT LOAD = 320 TONS/DRILLED SHAFT.
4. CONCRETE STRENGTH F'c=3,600 PSI.
5. ALL REINFORCING ~~SHALL BE~~ GRADE 60.
6. FOR BEARING SEAT ELEVATIONS SEE "ESTIMATED QUANITIES AND BEARING SEAT ELEVATIONS" SHEET.
7. ALL REINFORCING STEEL IN DRILLED SHAFT INCLUDED IN PRICE BID FOR DRILLED SHAFT.

HS25 LOADING

STATE OF TEXAS
JAMES B. HORNSBY
81485
REGISTERED PROFESSIONAL ENGINEER

THE SEAL APPEARING ON THIS DOCUMENT WAS AUTHORIZED BY JAMES B. HORNSBY PE 81485, ON JUNE 02, 2003

KBR
Engineered by KBR Technical Services, Inc

©2003 Texas Department of Transportation

IH 35
LOOP 20 TO UNIROYAL ROAD
NB FRTG RD @
TRES EQUIS BLVD
INTERIOR BENTS 2-5 & 8-9

SHEET 1 OF 2

FED RD DIV NO	FEDERAL AID PROJECT NO		SHEET NO
6	NH-2002 (79)		635
STATE	STATE DIST		COUNTY
TEXAS	LAREDO		WEBB
CONT	SECT	JOB	HIGHWAY NO
0018	05	062, ETC	IH 35

6/4/2003
HOUFILE023 \HCIVIL\CF0130\
b70bdp06.dgn-06

REF FILE(S): J01LOP01.BDR, BDR LV ON = 48,57,58,60-62

TABLE OF ESTIMATED QUANTITIES FOR BENT CAP

BAR	NO	SIZE	LENGTH	WEIGHT	
A	6	11	41'-8"	1328	
B_1	3	11	42'-0"	669	
B_2	4	11	13'-0"	276	
D	4	1¼" Ø	1'-8"*	28	
E_1	12	5	5'-3"	66	**
E_2	12	5	4'-7"	57	**
S_1	52	5	12'-6"	678	
S_2-S_7	12	5	11'-5"	143	
SS_1	52	5	10'-4"	560	
SS_2-SS_7	12	5	9'-3"	116	
T_1	6	5	41'-8"	261	
T_2	4	5	38'-0"	159	
† REINFORCING STEEL			LBS	4218	**
CLASS "C" CONCRETE TOTAL			CY	15.6	

† FOR CONTRACTOR'S INFORMATION ONLY
* OMIT AT BENT 4
** AT BENT 4 ONLY BENT 4 REINF IS 4313

TABLE OF VARIABLE COLUMN QUANTITIES

BENT NO	"H"	BARS V 30 '- #9		BARS Z 3-#3 SPIRAL		ESTIMATED QUANTITIES PER BENT	
		LENGTH	WEIGHT	LENGTH	WEIGHT	REINF STEEL †	CLASS "C" CONC
	FT	FT	LB	FT	LB	LB	CY
2	12	14'-3"	1454	204'-7"	77	4593	9.3
3	17	19'-3"	1964	283'-3"	107	6213	13.5
4	19	21'-3"	2168	314'-9"	118	6858	15.0
5	22	24'-3"	2474	362'-0"	136	7830	17.4
8	17	19'-3"	1964	283'-3"	107	6213	13.5
9	13	15'-3"	1556	220'-4"	83	4917	10.[illegible]

TABLE OF ESTIMATED TOTAL QUANTITIES

BENT NO	CLASS "C" CONC	REINF STEEL †
	CY	LB
2	24.9	8811
3	29.1	10403
4	30.6	11171
5	33.0	12020
8	29.1	10431
9	25.8	9135

NOTE:

1. FOR NOTES SEE SHEET 1 OF 2.

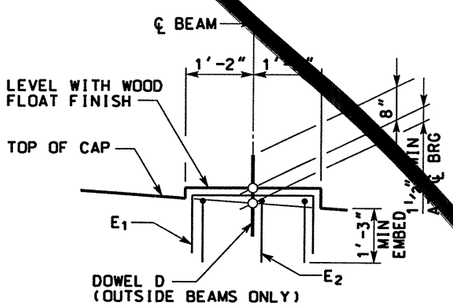

BEARING SEAT DETAIL

(BEARING SURFACE SHALL BE CLEAN AND FREE OF ALL LOOSE MATERIAL BEFORE PLACING BEARING PAD.)

TABLE OF ELEVATIONS

BENT NO	TOP OF COLUMN ELEV			"H"	TOP OF DRILLED SHAFT ELEV		
	COLUMN 1	COLUMN 2	COLUMN 3		COLUMN 1	COLUMN 2	COLUMN 3
				FT			
2	535.941	536.261	536.581	12	523.941	524.261	524.581
3	540.246	540.566	540.886	17	523.246	523.566	523.886
4	543.667	543.987	544.307	19	524.667	524.987	525.307
5	546.148	546.414	546.679	22	524.148	524.414	524.679
8	546.437	546.695	546.953	17	529.437	529.695	529.953
[illegible]	544.378	544.698	545.018	13	531.378	531.698	532.018

see next

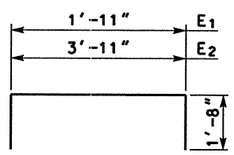

BARS E

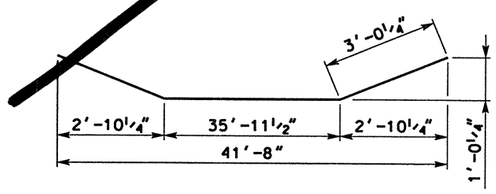

BARS B_1

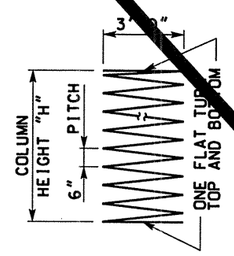

BARS Z

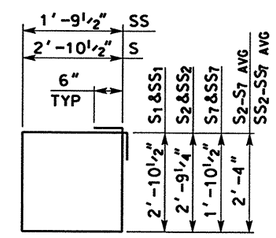

BARS S & SS

HS25 LOADING

STATE OF TEXAS
JAMES B. HORNSBY
P.E. 81485
REGISTERED PROFESSIONAL ENGINEER

THE SEAL APPEARING ON THIS DOCUMENT WAS AUTHORIZED BY JAMES B. HORNSBY PE 81485, ON JUNE 02, 2003

KBR
Engineered by KBR Technical Services, Inc

©2003 Texas Department of Transportation

IH 35
LOOP 20 TO UNIROYAL ROAD
NB FRTG RD @
TRES EQUIS BLVD
INTERIOR BENTS 2-5 & 8-9

SHEET 2 OF 2

FED RD DIV NO	FEDERAL AID PROJECT NO		SHEET NO
6	NH-2002 (79)		636
STATE	STATE DIST		COUNTY
TEXAS	LAREDO		WEBB
CONT	SECT	JOB	HIGHWAY NO
0018	05	062. ETC	IH 35

REF FILE(S): J01LOP01.BDR, BDR LV ON = 48.57.58.60-62

b70bdp07.dgn-09 HOUFILE023 \HCIVIL\CF0130\ 6/4/2003

TABLE OF ESTIMATED QUANTITIES FOR BENT CAP

BAR	NO	SIZE	LENGTH	WEIGHT	
A	6	11	41'-8"	1328	
B_1	3	11	42'-0"	669	
B_2	4	11	13'-0"	276	
D	4	1¼" Ø	1'-8"*	28	
E_1	12	5	5'-3"	66	**
E_2	12	5	4'-7"	57	**
S_1	52	5	12'-6"	678	
S_2-S_7	12	5	11'-5"	143	
SS_1	52	5	10'-4"	560	
SS_2-SS_7	12	5	9'-3"	116	
T_1	6	5	41'-8"	261	
T_2	4	5	38'-0"	159	
† REINFORCING STEEL			LBS	4218	**
CLASS "C" CONCRETE TOTAL			CY	15.6	

† FOR CONTRACTOR'S INFORMATION ONLY
* OMIT AT BENT 4
** AT BENT 4 ONLY BENT 4 REINF IS 4313

TABLE OF VARIABLE COLUMN QUANTITIES

BENT NO	"H"	BARS V 30'- #9		BARS Z 3-#3 SPIRAL		ESTIMATED QUANTITIES PER BENT	
		LENGTH	WEIGHT	LENGTH	WEIGHT	REINF STEEL †	CLASS "C" CONC
	FT	FT	LB	FT	LB	LB	CY
2	18	20'-3"	2066	293'-10"	332	2398	14.1
3	22	24'-3"	2474	356'-9"	403	2877	17.3
4	24	26'-3"	2678	388'-3"	438	3116	18.9
5	26	28'-3"	2882	419'-9"	474	3356	20.4
8	22	24'-3"	2474	356'-9"	403	2877	17.3
9	18	20'-3"	2066	293'-10"	332	2398	14.1

1

TABLE OF ESTIMATED TOTAL QUANTITIES

BENT NO	CLASS "C" CONC	REINF STEEL †
	CY	LB
2	29.7	6616
3	32.9	7095
4	34.5	7429
5	36.0	7574
8	32.9	7095
9	29.7	6616

NOTE:

1. FOR NOTES SEE SHEET 1 OF 2.

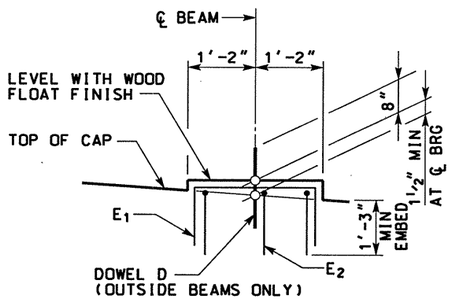

BEARING SEAT DETAIL

(BEARING SURFACE ~~SHALL BE~~ CLEAN AND FREE OF ALL LOOSE MATERIAL BEFORE PLACING BEARING PAD.)

TABLE OF ELEVATIONS

BENT NO	TOP OF COLUMN ELEV			"H"	TOP OF DRILLED SHAFT ELEV		
	COLUMN 1	COLUMN 2	COLUMN 3		COLUMN 1	COLUMN 2	COLUMN 3
				FT			
2	535.941	536.261	536.581	18	517.941	518.261	518.581
3	540.246	540.566	540.886	22	518.246	518.566	518.886
4	543.667	543.987	544.307	24	519.667	519.987	520.307
5	546.148	546.414	546.679	26	520.148	520.414	520.679
8	546.437	546.695	546.953	22	524.437	524.695	524.953
9	544.378	544.698	545.018	18	526.378	526.698	527.018

1

HS25 LOADING

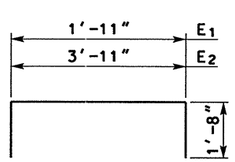

BARS E

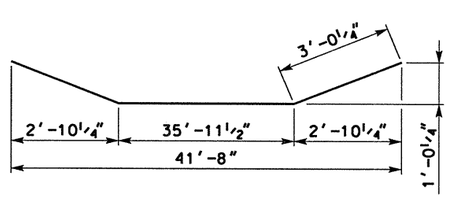

BARS B_1

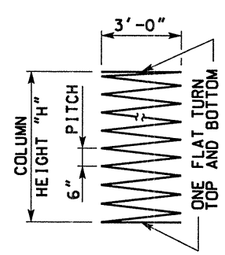

BARS Z

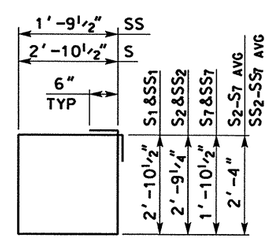

BARS S & SS

DATE	BY	REV	REVISION
05/13/04	RB	1	REV "H", DS EL & QUAN

THE SEAL APPEARING ON THIS DOCUMENT WAS AUTHORIZED BY RAYMOND C. BARKER PE 44988, ON MAY 13, 2004

STATE OF TEXAS — RAYMOND C. BARKER — P.E. 44988 — REGISTERED PROFESSIONAL ENGINEER

Raymond C. Barker

KBR

Engineered by KBR Technical Services, Inc

©2003 Texas Department of Transportation

IH 35
LOOP 20 TO UNIROYAL ROAD
NB FRTG RD @
TRES EQUIS BLVD
INTERIOR BENTS 2-5 & 8-9

SHEET 2 OF 2

FED RD DIV NO	FEDERAL AID PROJECT NO		SHEET NO
6	NH-2002 (79)		636
STATE	STATE DIST		COUNTY
TEXAS	LAREDO		WEBB
CONT	SECT	JOB	HIGHWAY NO
0018	05	062, ETC	IH 35

REF FILE(S): J01LOP01.BDR, BDR LV ON = 48,57,58,60-62

b70bdp07.dgn-10 HOUFILE023 \HCIVIL\CF0130\ 5/13/2004

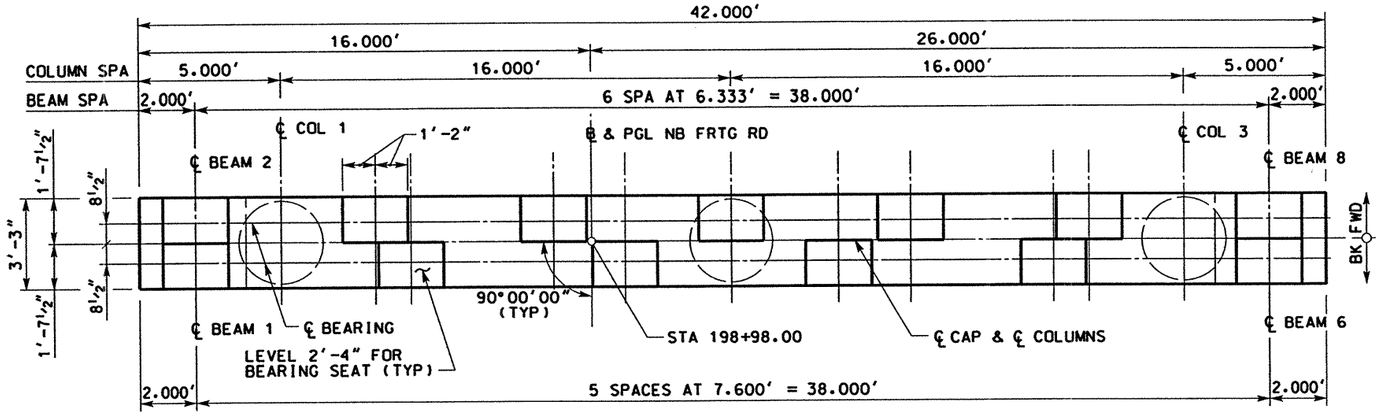

PLAN

SCALE: 3/16" = 1'-0"

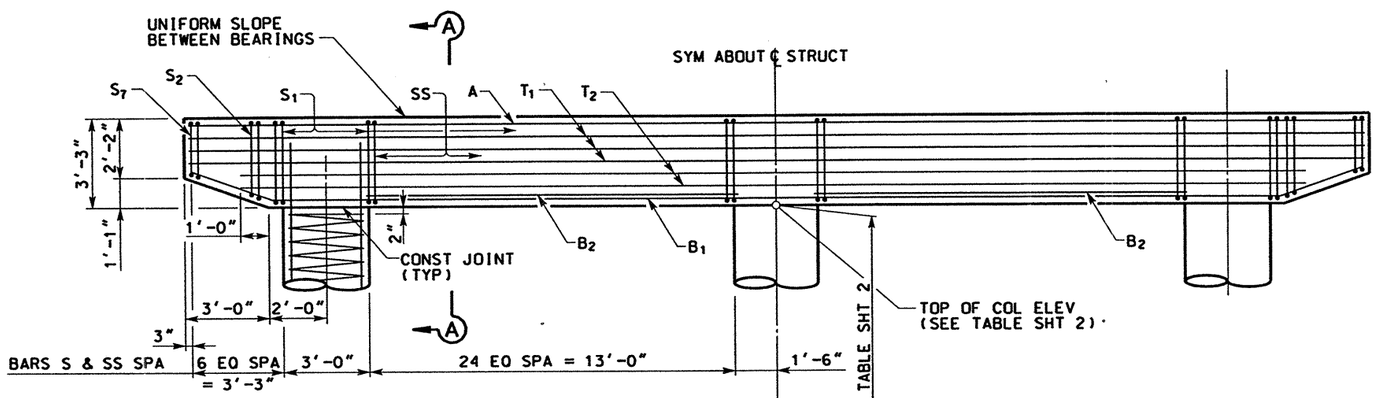

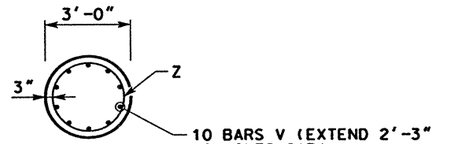

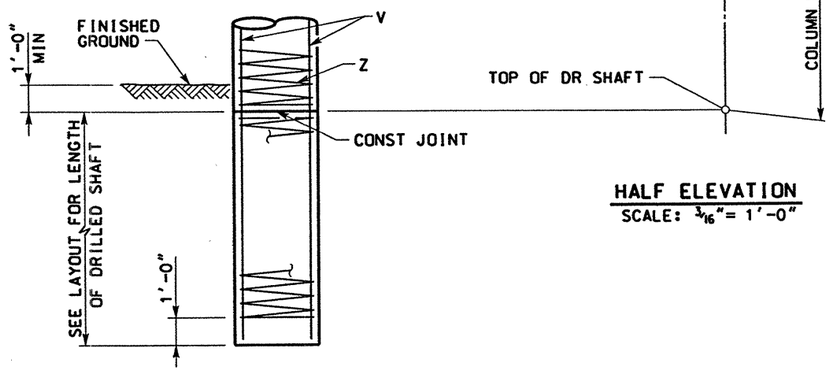

HALF ELEVATION

SCALE: 3/16" = 1'-0"

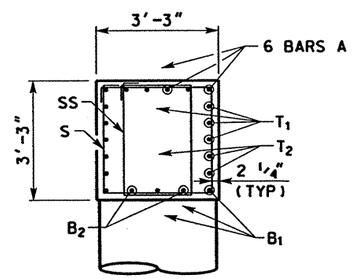

SECTION A-A

SCALE: 1/4" = 1'-0"

NOTES:

1. DESIGNED ACCORDING TO AASHTO 1996 STANDARDS AND INTERIM SPECIFICATIONS.
2. ALL DIMENSIONS TO THE REINFORCING STEEL ARE TO ℄ OF BAR UNLESS NOTED OTHERWISE.
3. CALCULATED DRILLED SHAFT LOAD = 320 TONS/DRILLED SHAFT.
4. CONCRETE STRENGTH F'c=3.600 PSI.
5. ALL REINFORCING ~~SHALL BE~~ GRADE 60.
6. FOR BEARING SEAT ELEVATIONS SEE "ESTIMATED QUANITIES AND BEARING SEAT ELEVATIONS" SHEET.
7. ALL REINFORCING STEEL IN DRILLED SHAFT INCLUDED IN PRICE BID FOR DRILLED SHAFT.

HS25 LOADING

STATE OF TEXAS — JAMES B. HORNSBY 81485 — REGISTERED PROFESSIONAL ENGINEER

THE SEAL APPEARING ON THIS DOCUMENT WAS AUTHORIZED BY JAMES B. HORNSBY PE 81485, ON APRIL 18, 2003

KBR

Engineered by KBR Technical Services, Inc

©2003 Texas Department of Transportation

IH 35
LOOP 20 TO UNIROYAL ROAD
NB FRTG RD @
TRES EQUIS BLVD
INTERIOR BENT 6

SHEET 1 OF 1

FED RD DIV NO	FEDERAL AID PROJECT NO		SHEET NO
6	NH-2002 (79)		637
STATE	STATE DIST		COUNTY
TEXAS	LAREDO		WEBB
CONT	SECT	JOB	HIGHWAY NO
0018	05	062, ETC	IH 35

REF FILE(S): J01LOP01.BDR, BDR LV ON = 48,57,58,60-62
HOUFILE023 \HCIVIL\CF0130\ 4/18/2003
b70bdp16.dgn-05

TABLE OF ESTIMATED QUANTITIES FOR BENT CAP

BAR	NO	SIZE	LENGTH	WEIGHT
A	6	11	41'-8"	1328
B_1	3	11	42'-0"	669
B_2	4	11	13'-0"	276
S_1	52	5	12'-6"	678
S_2-S_7	12	5	11'-5"	143
SS_1	52	5	10'-4"	560
SS_2-SS_7	12	5	9'-3"	116
T_1	6	5	41'-8"	261
T_2	4	5	38'-0"	159
† REINFORCING STEEL			LBS	4190
CLASS "C" CONCRETE TOTAL			CY	15.6

† FOR CONTRACTOR'S INFORMATION ONLY

TABLE OF VARIABLE COLUMN QUANTITIES

BENT NO	"H"	BARS V 30 '- #9		BARS Z 3-#3 SPIRAL		ESTIMATED QUANTITIES PER BENT: REINF STEEL †	ESTIMATED QUANTITIES PER BENT: CLASS "C" CONC
		LENGTH	WEIGHT	LENGTH	WEIGHT		
	FT	FT	LB	FT	LB	LB	CY
6	21	23'-3"	2372	346'-3"	130	7506	16.5

TABLE OF ESTIMATED TOTAL QUANTITIES

BENT NO	CLASS "C" CONC	REINF STEEL †
	CY	LB
6	32.1	11724

NOTE:

1. FOR NOTES SEE SHEET 1 OF 2.

TABLE OF ELEVATIONS

TOP OF COLUMN ELEV			"H"	TOP OF DRILLED SHAFT ELEV		
COLUMN 1	COLUMN 2	COLUMN 3		COLUMN 1	COLUMN 2	COLUMN 3
			FT			
547.491	547.573	547.654	21	526.491	526.573	526.654

SEE NEXT

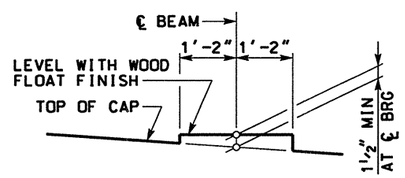

BEARING SEAT DETAIL

(BEARING SURFACE SHALL BE CLEAN AND FREE OF ALL LOOSE MATERIAL BEFORE PLACING BEARING PAD.)

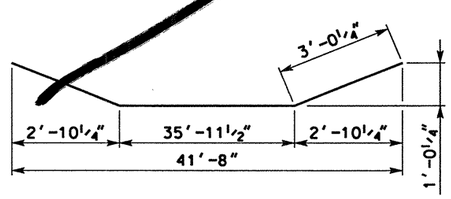

BARS B_1

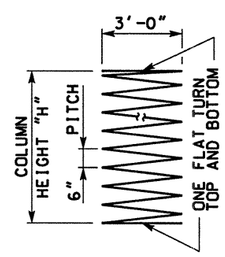

BARS Z

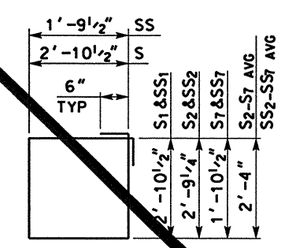

BARS S & SS

HS25 LOADING

STATE OF TEXAS — JAMES B. HORNSBY — P.E. 81485 — REGISTERED PROFESSIONAL ENGINEER

THE SEAL APPEARING ON THIS DOCUMENT WAS AUTHORIZED BY JAMES B. HORNSBY PE 81485, ON JUNE 02, 2003

KBR

Engineered by KBR Technical Services, Inc

©2003 Texas Department of Transportation

IH 35
LOOP 20 TO UNIROYAL ROAD
NB FRTG RD @
TRES EQUIS BLVD
INTERIOR BENTS 6

SHEET 2 OF 2

FED RD DIV NO	FEDERAL AID PROJECT NO		SHEET NO
6	NH-2002 (79)		638
STATE	STATE DIST		COUNTY
TEXAS	LAREDO		WEBB
CONT	SECT	JOB	HIGHWAY NO
0018	05	062, ETC	IH 35

REF FILE(S): J01LOP01.BDR, BDR LV ON = 48,57,58,60-62
HOUFILE023 \HCIVIL\CF0130\ 6/4/2003
p70bdp17.dgn-06

TABLE OF ESTIMATED QUANTITIES FOR BENT CAP

BAR	NO	SIZE	LENGTH	WEIGHT
A	6	11	41'-8"	1328
B_1	3	11	42'-0"	669
B_2	4	11	13'-0"	276
S_1	52	5	12'-6"	678
S_2-S_7	12	5	11'-5"	143
SS_1	52	5	10'-4"	560
SS_2-SS_7	12	5	9'-3"	116
T_1	6	5	41'-8"	261
T_2	4	5	38'-0"	159
† REINFORCING STEEL			LBS	4190
CLASS "C" CONCRETE TOTAL			CY	15.6

† FOR CONTRACTOR'S INFORMATION ONLY

TABLE OF VARIABLE COLUMN QUANTITIES

BENT NO	"H"	BARS V 30 - #9		BARS Z 3-#3 SPIRAL		ESTIMATED QUANTITIES PER BENT: REINF STEEL †	ESTIMATED QUANTITIES PER BENT: CLASS "C" CONC
		LENGTH	WEIGHT	LENGTH	WEIGHT		
	FT	FT	LB	FT	LB	LB	CY
6	26	28'-3"	2882	419'-9"	474	3356	20.4

1

TABLE OF ESTIMATED TOTAL QUANTITIES

BENT NO	CLASS "C" CONC	REINF STEEL †
	CY	LB
6	36.0	7546

1

NOTE:

1. FOR NOTES SEE SHEET 1 OF 2.

TABLE OF ELEVATIONS

TOP OF COLUMN ELEV			"H"	TOP OF DRILLED SHAFT ELEV		
COLUMN 1	COLUMN 2	COLUMN 3		COLUMN 1	COLUMN 2	COLUMN 3
			FT			
547.491	547.573	547.654	26	521.491	521.573	521.654

1

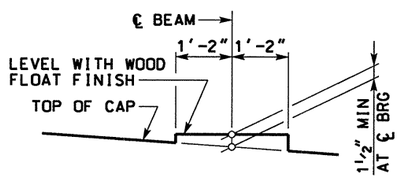

BEARING SEAT DETAIL

(BEARING SURFACE ~~SHALL BE~~ CLEAN AND FREE OF ALL LOOSE MATERIAL BEFORE PLACING BEARING PAD.)

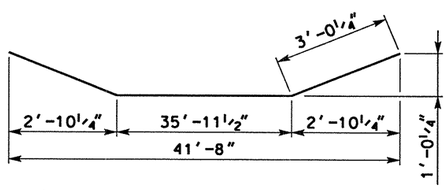

BARS B_1

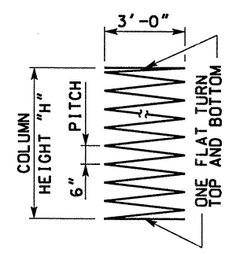

BARS Z

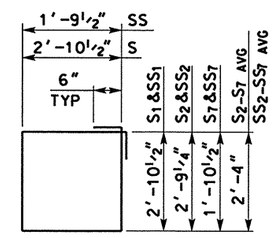

BARS S & SS

HS25 LOADING

STATE OF TEXAS — RAYMOND C. BARKER — 44988 — REGISTERED PROFESSIONAL ENGINEER

THE SEAL APPEARING ON THIS DOCUMENT WAS AUTHORIZED BY RAYMOND C. BARKER PE 44988, ON MAY 13, 2004

Raymond C. Barker

KBR

Engineered by KBR Technical Services, Inc

©2003 Texas Department of Transportation

IH 35
LOOP 20 TO UNIROYAL ROAD
NB FRTG RD @
TRES EQUIS BLVD
INTERIOR BENTS 6

SHEET 2 OF 2

FED RD DIV NO	FEDERAL AID PROJECT NO		SHEET NO
6	NH-2002 (79)		638
STATE	STATE DIST		COUNTY
TEXAS	LAREDO		WEBB
CONT	SECT	JOB	HIGHWAY NO
0018	05	062, ETC	IH 35

DATE	BY	REV	REVISION
05/13/04	RB	1	REV "H", DS EL & QUAN

REF FILE(S): J01LOP01.BDR, BDR LV ON = 48.57.58.60-62

b70bdp17.dgn-07 HOUFILE023 \HCIVIL\CF0130\ 5/13/2004

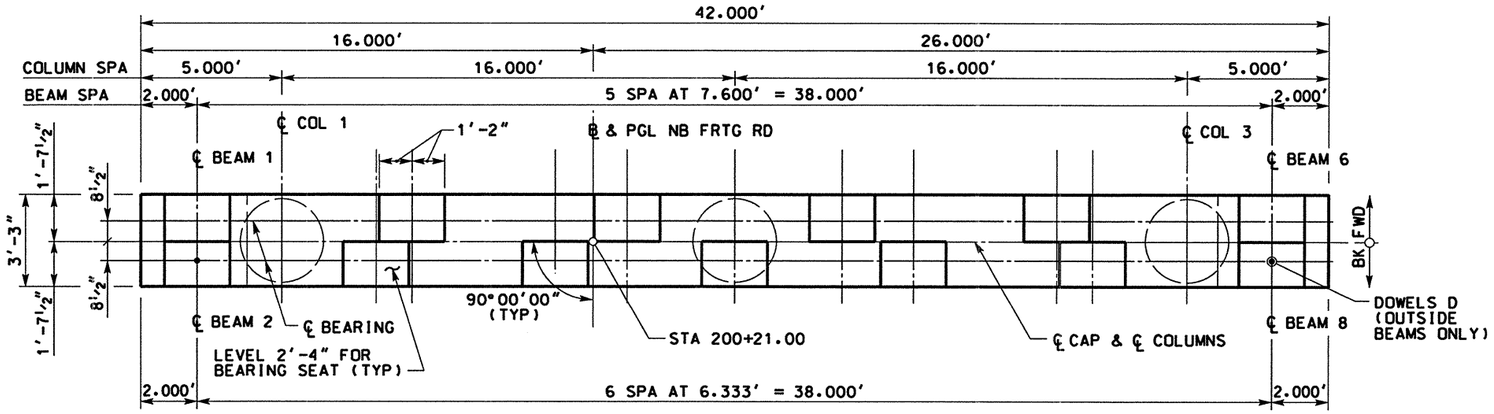

PLAN
SCALE: 3/16"= 1'-0"

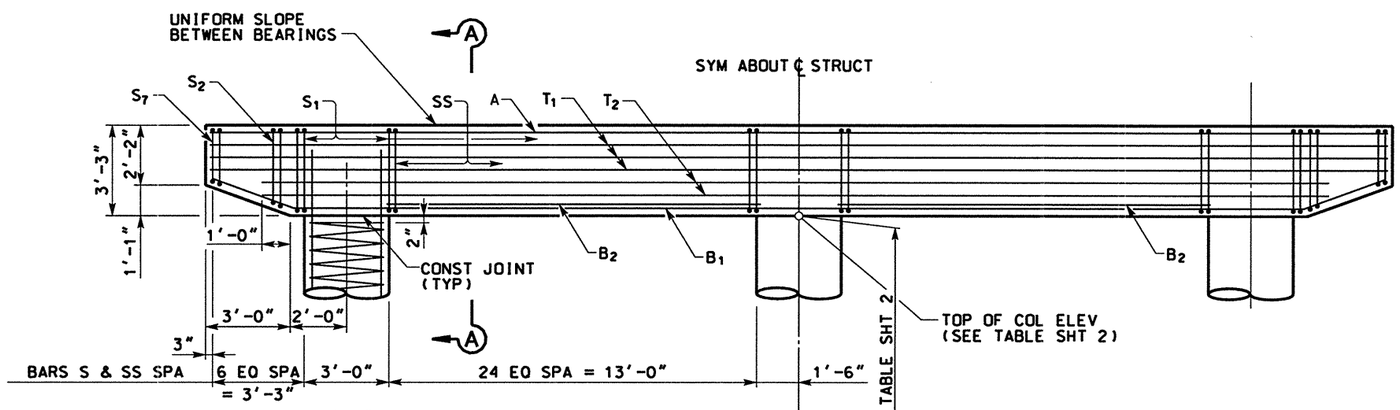

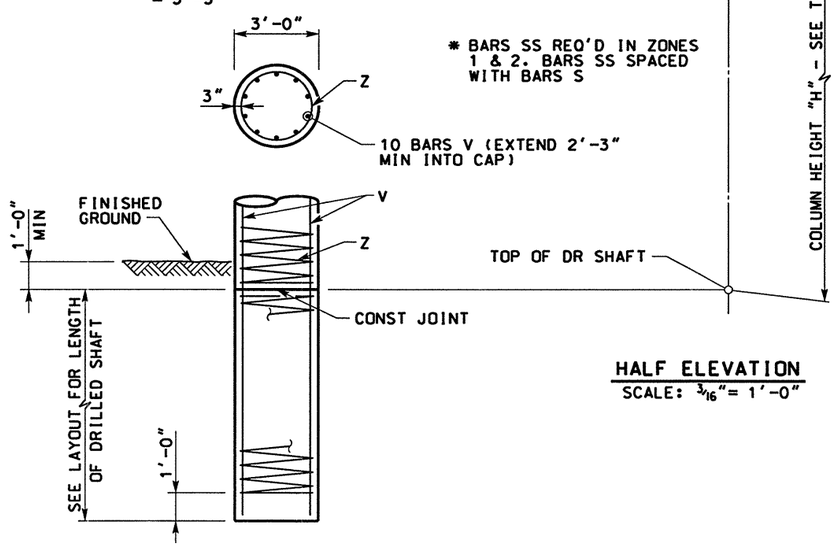

HALF ELEVATION
SCALE: 3/16"= 1'-0"

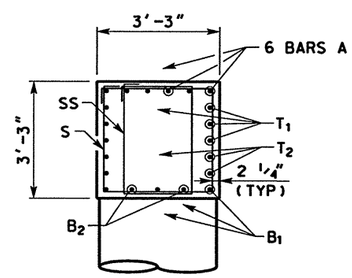

SECTION A-A
SCALE: 1/4"= 1'-0"

NOTES:

1. DESIGNED ACCORDING TO AASHTO 1996 STANDARDS AND INTERIM SPECIFICATIONS.
2. ALL DIMENSIONS TO THE REINFORCING STEEL ARE TO ℄ OF BAR UNLESS NOTED OTHERWISE.
3. CALCULATED DRILLED SHAFT LOAD = 320 TONS/DRILLED SHAFT.
4. CONCRETE STRENGTH F'c=3,600 PSI.
5. ALL REINFORCING ~~SHALL BE~~ GRADE 60.
6. FOR BEARING SEAT ELEVATIONS SEE "ESTIMATED QUANITIES AND BEARING SEAT ELEVATIONS" SHEET.
7. ALL REINFORCING STEEL IN DRILLED SHAFT INCLUDED IN PRICE BID FOR DRILLED SHAFT.

HS25 LOADING

STATE OF TEXAS — JAMES B. HORNSBY — NO. 81485 — REGISTERED PROFESSIONAL ENGINEER

THE SEAL APPEARING ON THIS DOCUMENT WAS AUTHORIZED BY JAMES B. HORNSBY PE 81485, ON JUNE 02, 2003

KBR
Engineered by KBR Technical Services, Inc

©2003 Texas Department of Transportation

IH 35
LOOP 20 TO UNIROYAL ROAD
NB FRTG RD @
TRES EQUIS BLVD
INTERIOR BENT 7

SHEET 1 OF 2

FED RD DIV NO	FEDERAL AID PROJECT NO	SHEET NO
6	NH-2002 (79)	639
STATE	STATE DIST	COUNTY
TEXAS	LAREDO	WEBB
CONT	SECT / JOB	HIGHWAY NO

REF FILE(S): J01LOP01.BDR, BDR LV ON = 48,57,58,60-62
HOUFILE023 \HCIVIL\CF0130\ 6/4/2003
70bdp19.dgn-05

TABLE OF ESTIMATED QUANTITIES FOR BENT CAP

BAR	NO	SIZE	LENGTH	WEIGHT
A	6	11	41'-8"	1328
B_1	3	11	42'-0"	669
B_2	4	11	13'-0"	276
D	2	1¼" Ø	1'-8"	14
S_1	52	5	12'-6"	678
S_2-S_7	12	5	11'-5"	143
SS_1	52	5	10'-4"	560
SS_2-SS_7	12	5	9'-3"	116
T_1	6	5	41'-8"	261
T_2	4	5	38'-0"	159
† REINFORCING STEEL			LBS	4204
CLASS "C" CONCRETE TOTAL			CY	15.6

† FOR CONTRACTOR'S INFORMATION ONLY

TABLE OF VARIABLE COLUMN QUANTITIES

BENT NO	"H"	BARS V 30 '- #9		BARS Z 3-#3 SPIRAL		ESTIMATED QUANTITIES PER BENT	
		LENGTH	WEIGHT	LENGTH	WEIGHT	REINF STEEL †	CLASS "C" CONC
	FT	FT	LB	FT	LB	LB	CY
7	20	22'-3"	2270	330'-6"	124	7182	15.6

TABLE OF ESTIMATED TOTAL QUANTITIES

BENT NO	CLASS "C" CONC	REINF STEEL †
	CY	LB
7	31.2	11386

NOTE:

1. FOR NOTES SEE SHEET 1 OF 2.

TABLE OF ELEVATIONS

TOP OF COLUMN ELEV			"H"	TOP OF DRILLED SHAFT ELEV		
COLUMN 1	COLUMN 2	COLUMN 3		COLUMN 1	COLUMN 2	COLUMN 3
			FT			
547.566	547.648	547.729	20	527.566	527.648	527.729

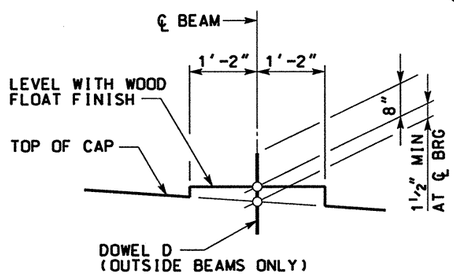

BEARING SEAT DETAIL

(BEARING SURFACE ~~SHALL BE~~ CLEAN AND FREE OF ALL LOOSE MATERIAL BEFORE PLACING BEARING PAD.)

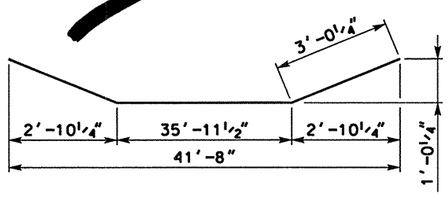

BARS B_1

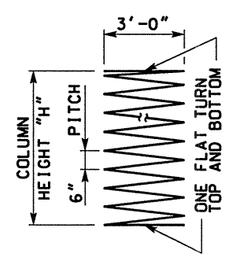

BARS Z

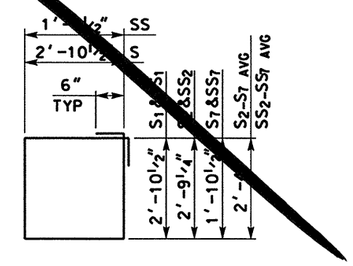

BARS S & SS

See next

HS25 LOADING

STATE OF TEXAS — JAMES B. HORNSBY — 81485 — REGISTERED PROFESSIONAL ENGINEER

THE SEAL APPEARING ON THIS DOCUMENT WAS AUTHORIZED BY JAMES B. HORNSBY PE 81485, ON JUNE 02, 2003

KBR

Engineered by KBR Technical Services, Inc

©2003 Texas Department of Transportation

IH 35
LOOP 20 TO UNIROYAL ROAD
NB FRTG RD @
TRES EQUIS BLVD
INTERIOR BENTS 7

SHEET 2 OF 2

FED RD DIV NO	FEDERAL AID PROJECT NO		SHEET NO
6	NH-2002 (79)		640
STATE	STATE DIST		COUNTY
TEXAS	LAREDO		WEBB
CONT	SECT	JOB	HIGHWAY NO
0018	05	062, ETC	IH 35

REF FILE(S): J01LOP01.BDR, BDR LV ON = 48,57,58,60-62

HOUFILE023 \HCIVIL\CF0130\ b70bdp18.dgn-06 6/4/2003

TABLE OF ESTIMATED QUANTITIES FOR BENT CAP

BAR	NO	SIZE	LENGTH	WEIGHT
A	6	11	41'-8"	1328
B_1	3	11	42'-0"	669
B_2	4	11	13'-0"	276
D	2	1¼" Ø	1'-8"	14
S_1	52	5	12'-6"	678
S_2-S_7	12	5	11'-5"	143
SS_1	52	5	10'-4"	560
SS_2-SS_7	12	5	9'-3"	116
T_1	6	5	41'-8"	261
T_2	4	5	38'-0"	159
† REINFORCING STEEL			LBS	4204
CLASS "C" CONCRETE TOTAL			CY	15.6

† FOR CONTRACTOR'S INFORMATION ONLY

TABLE OF VARIABLE COLUMN QUANTITIES

BENT NO	"H"	BARS V 30 - #9		BARS Z 3-#3 SPIRAL		ESTIMATED QUANTITIES PER BENT: REINF STEEL †	ESTIMATED QUANTITIES PER BENT: CLASS "C" CONC
		LENGTH	WEIGHT	LENGTH	WEIGHT		
	FT	FT	LB	FT	LB	LB	CY
7	24	26'-3"	2678	388'-3"	438	3116	18.9

1

TABLE OF ESTIMATED TOTAL QUANTITIES

BENT NO	CLASS "C" CONC	REINF STEEL †
	CY	LB
7	34.5	7320

1

NOTE:

1. FOR NOTES SEE SHEET 1 OF 2.

TABLE OF ELEVATIONS

TOP OF COLUMN ELEV			"H"	TOP OF DRILLED SHAFT ELEV		
COLUMN 1	COLUMN 2	COLUMN 3		COLUMN 1	COLUMN 2	COLUMN 3
			FT			
547.566	547.648	547.729	24	523.566	523.648	523.729

1

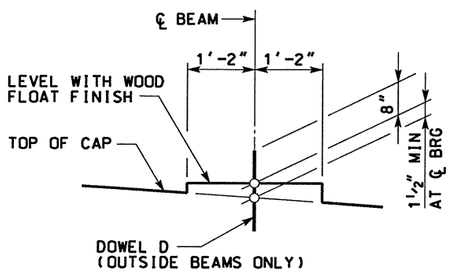

BEARING SEAT DETAIL

(BEARING SURFACE [redacted] BE CLEAN AND FREE OF ALL LOOSE MATERIAL BEFORE PLACING BEARING PAD.)

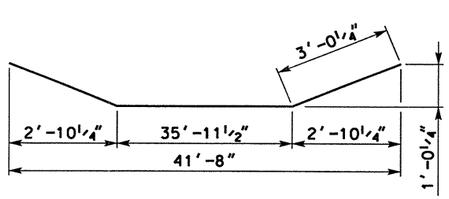

BARS B_1

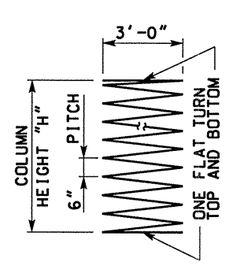

BARS Z

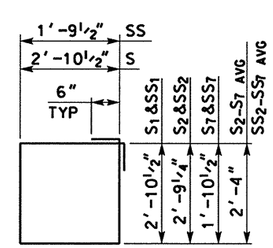

BARS S & SS

HS25 LOADING

STATE OF TEXAS — RAYMOND C. BARKER — 44988 — REGISTERED PROFESSIONAL ENGINEER

THE SEAL APPEARING ON THIS DOCUMENT WAS AUTHORIZED BY RAYMOND C. BARKER PE 44988, ON MAY 13, 2004

Raymond C. Barker

KBR

Engineered by KBR Technical Services, Inc

©2003 Texas Department of Transportation

IH 35
LOOP 20 TO UNIROYAL ROAD
NB FRTG RD @
TRES EQUIS BLVD
INTERIOR BENTS 7

SHEET 2 OF 2

FED RD DIV NO	FEDERAL AID PROJECT NO	SHEET NO
6	NH-2002 (79)	640

STATE	STATE DIST	COUNTY
TEXAS	LAREDO	WEBB

CONT	SECT	JOB	HIGHWAY NO
0018	05	062, ETC	IH 35

DATE	BY	REV	REVISION
05/13/04	RB	1	REV "H", DS EL & QUAN

REF FILE(S): J01LOP01.BDR, BDR LV ON = 48,57,58,60-62

b70bdp18.dgn-07 HOUFILE023 \HCIVIL\CF0130\ 5/13/2004

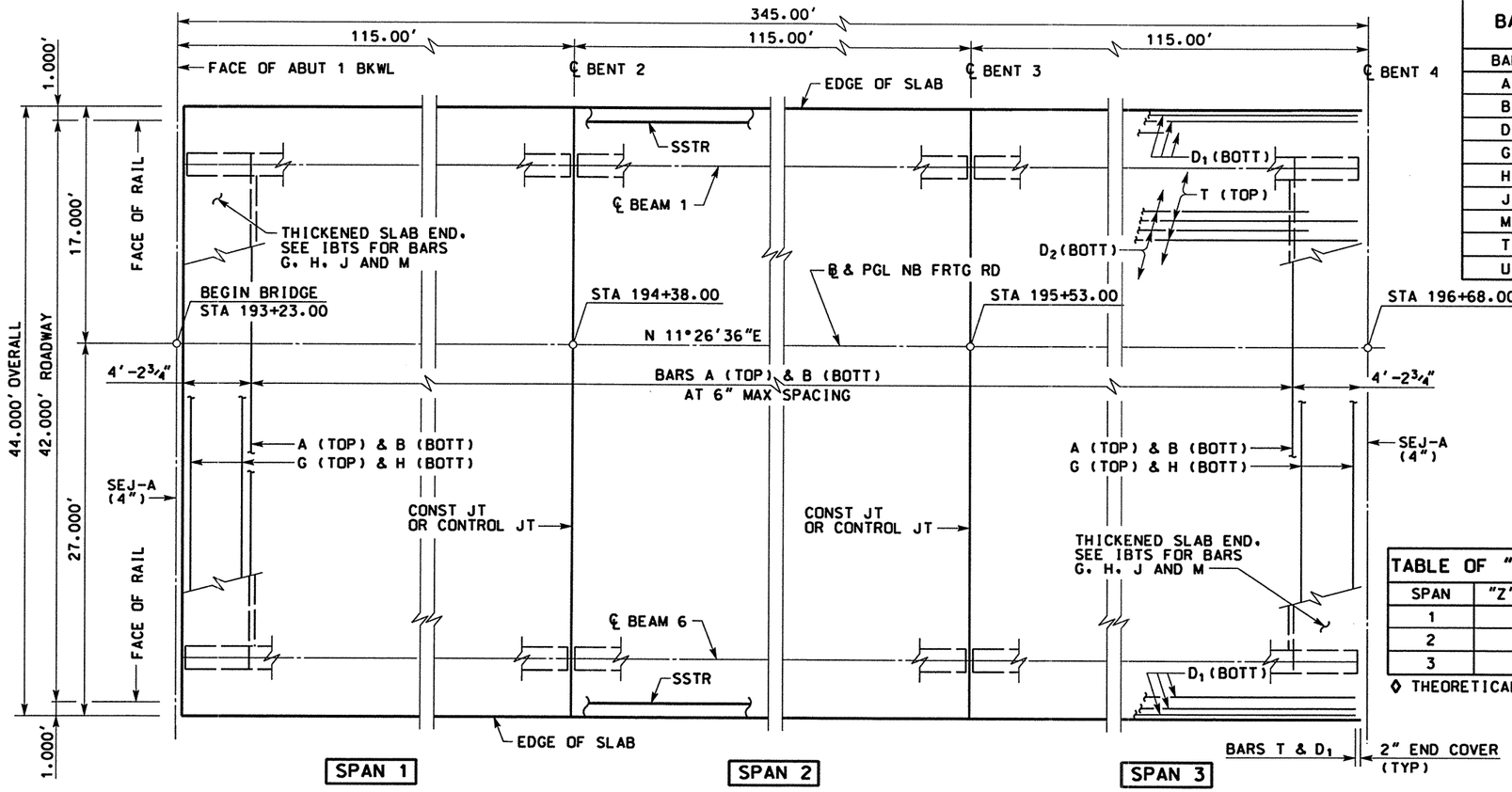

PLAN

BAR TABLE	
BAR	SIZE
A	#5
B	#5
D	#5
G	#5
H	#5
J	#5
M	#5
T	#4
U	#4

TABLE OF ESTIMATED QUANTITIES

SPAN	REINF CONCRETE SLAB	PRESTRESSED CONCRETE BEAMS (TY IV)	CLASS "S" CONCRETE †	TOTAL REINF STEEL *†
	SF	LF	CY	LB
1	5060	688.50	139.1	32.890
2	5060	688.50	139.1	32.890
3	5060	688.32	139.1	32.890

* REINFORCING STEEL WEIGHT IS CALCULATED USING AN APPROXIMATE FACTOR OF 6.5 LBS/SF.

† FOR CONTRACTOR'S INFORMATION ONLY.

BEAM REPORT

SPAN	BEAMS	HORIZONTAL DISTANCE		TRUE DISTANCE BOT BM FLG **
		C-C BENT	C-C BRG	
1	ALL	115.000	113.583	114.75
2	ALL	115.000	113.583	114.75
3	ALL	115.000	113.583	114.72

** BEAM LENGTH SHOWN IS BOTTOM BEAM FLANGE LENGTH WITH ADJUSTMENT MADE FOR BEAM SLOPE

TABLE OF "Z" DEPTHS	
SPAN	"Z"◊ AT ℄ SPAN
1	8½"
2	8¾"
3	10"

◊ THEORETICAL DIMENSION

NOTES:

1. DESIGNED ACCORDING TO CURRENT AASHTO STANDARD AND INTERIM SPECIFICATIONS.
2. SEE IBTS STANDARD FOR THICKENED SLAB END DETAILS AND QUANTITY ADJUSTMENTS.
3. SEE PCP(C) OR PMDF(C) STANDARDS FOR DETAILS AND QUANTITY ADJUSTMENTS IF EITHER OF THESE OPTIONS ARE USED.
4. ALL REINFORCING ~~SHALL BE~~ GRADE 60.
5. CONCRETE STRENGTH F'c = 4.000 PSI.
6. BAR LAPS, WHERE REQUIRED, ~~SHALL BE~~ AS FOLLOWS:

UNCOATED	'- #4	= 1'-5"
	'- #5	= 1'-9"
EPOXY COATED	'- #4	= 2'-1"
	'- #5	= 2'-7"

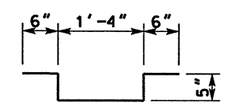

BARS U

SPAN	"A"	"B"
	FT	FT
1-3	0.1348	0.1892

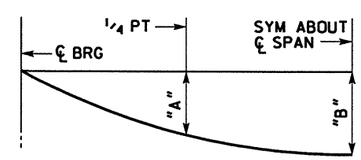

DEAD LOAD DEFLECTION DIAGRAM

NOTE: DEFLECTIONS SHOWN ARE DUE TO CONCRETE SLAB ONLY. ($E_c = 5 \times 10^6$ PSI) CALCULATED DEFLECTIONS SHOWN ARE THEORETICAL AND ACTUAL DIMENSIONS ~~MAY BE~~ LESS. DEFLECTIONS ~~SHALL BE~~ ADJUSTED BASED ON FIELD OBSERVATIONS.

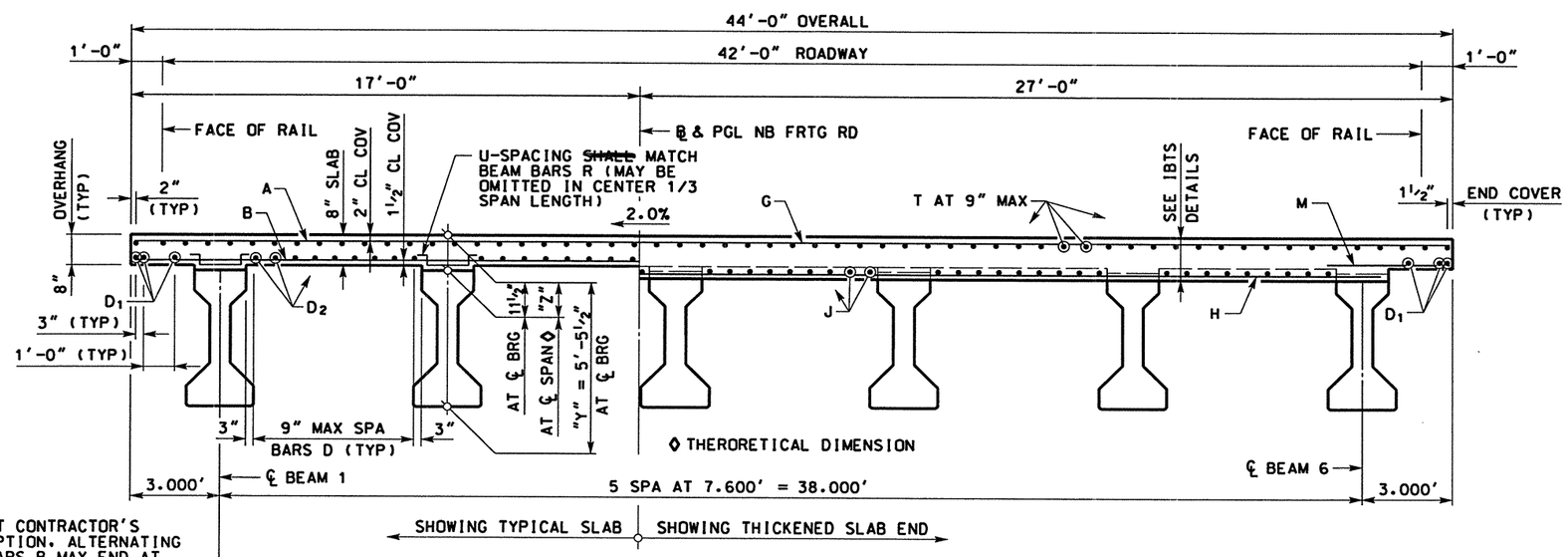

TYPICAL TRANSVERSE SECTION
SCALE: 1"= 5'

HS25 LOADING

0 5 10
SCALE: 1" = 10'

STATE OF TEXAS
JAMES B. HORNSBY
NO. 81485
REGISTERED PROFESSIONAL ENGINEER

THE SEAL APPEARING ON THIS DOCUMENT WAS AUTHORIZED BY JAMES B. HORNSBY PE 81485, ON JUNE 02, 2003

KBR
Engineered by KBR Technical Services, Inc

©2003 Texas Department of Transportation

IH 35
LOOP 20 TO UNIROYAL ROAD
NB FRONTAGE ROAD
345.00' PRESTRESSED CONC BEAM UNIT
(SPAN 1-3)

SHEET 1 OF 1

FED RD DIV NO	FEDERAL AID PROJECT NO	SHEET NO
6	NH-2002 (79)	641
STATE	STATE DIST	COUNTY
TEXAS	LAREDO	WEBB
CONT / SECT / JOB		HIGHWAY NO
0018 / 05 / 062, ETC		IH 35

REF FILE(S): J01LOP01.BDR, BDR LV ON = 14:48.57.58.60-62

b70slp02.dgn-11 HOUFILE023 \hciwi\cf0130\ 6/4/2003

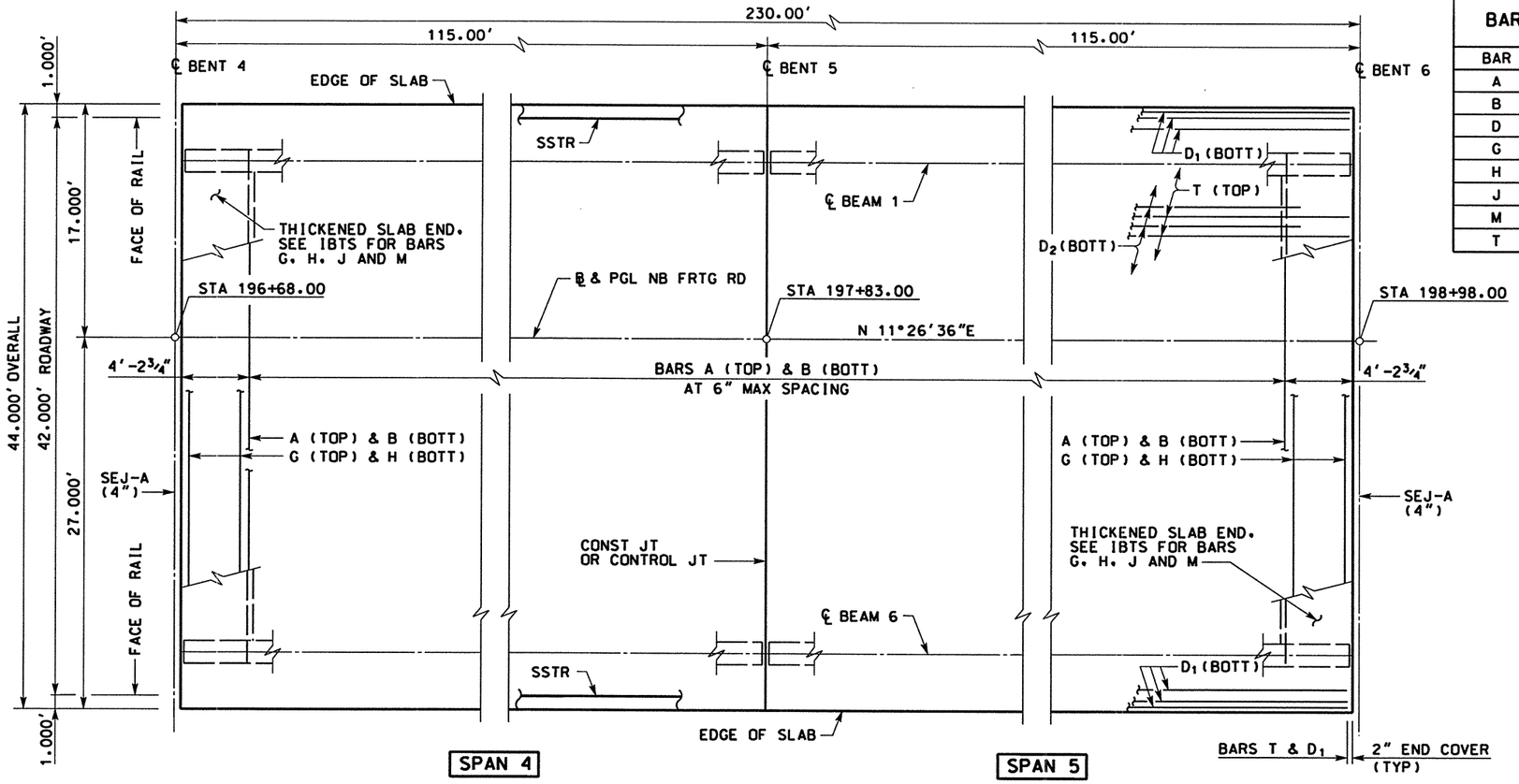

PLAN

BAR TABLE	
BAR	SIZE
A	#5
B	#5
D	#5
G	#5
H	#5
J	#5
M	#5
T	#4

TABLE OF ESTIMATED QUANTITIES				
SPAN	REINF CONCRETE SLAB	PRESTRESSED CONCRETE BEAMS (TY IV)	CLASS "S" CONCRETE †	TOTAL REINF STEEL *†
	SF	LF	CY	LB
4	5060	688.14	139.1	32.890
5	5060	688.02	139.1	32.890

*REINFORCING STEEL WEIGHT IS CALCULATED USING AN APPROXIMATE FACTOR OF 6.5 LBS/SF.

† FOR CONTRACTOR'S INFORMATION ONLY.

BEAM REPORT				
SPAN	BEAMS	HORIZONTAL DISTANCE		TRUE DISTANCE BOT BM FLG **
		C-C BENT	C-C BRG	
4	ALL	115.000	113.583	114.69
5	ALL	115.000	113.583	114.67

** BEAM LENGTH SHOWN IS BOTTOM BEAM FLANGE LENGTH WITH ADJUSTMENT MADE FOR BEAM SLOPE

NOTES:

1. DESIGNED ACCORDING TO CURRENT AASHTO STANDARD AND INTERIM SPECIFICATIONS.
2. SEE IBTS STANDARD FOR THICKENED SLAB END DETAILS AND QUANTITY ADJUSTMENTS.
3. SEE PCP(C) OR PMDF(C) STANDARDS FOR DETAILS AND QUANTITY ADJUSTMENTS IF EITHER OF THESE OPTIONS ARE USED.
4. ALL REINFORCING ~~SHALL BE~~ GRADE 60.
5. CONCRETE STRENGTH F'c = 4.000 PSI.
6. BAR LAPS. WHERE REQUIRED. ~~SHALL BE~~ AS FOLLOWS:
   UNCOATED '- #4 = 1'-5"
   '- #5 = 1'-9"
   EPOXY COATED '- #4 = 2'-1"
   '- #5 = 2'-7"

HS25 LOADING

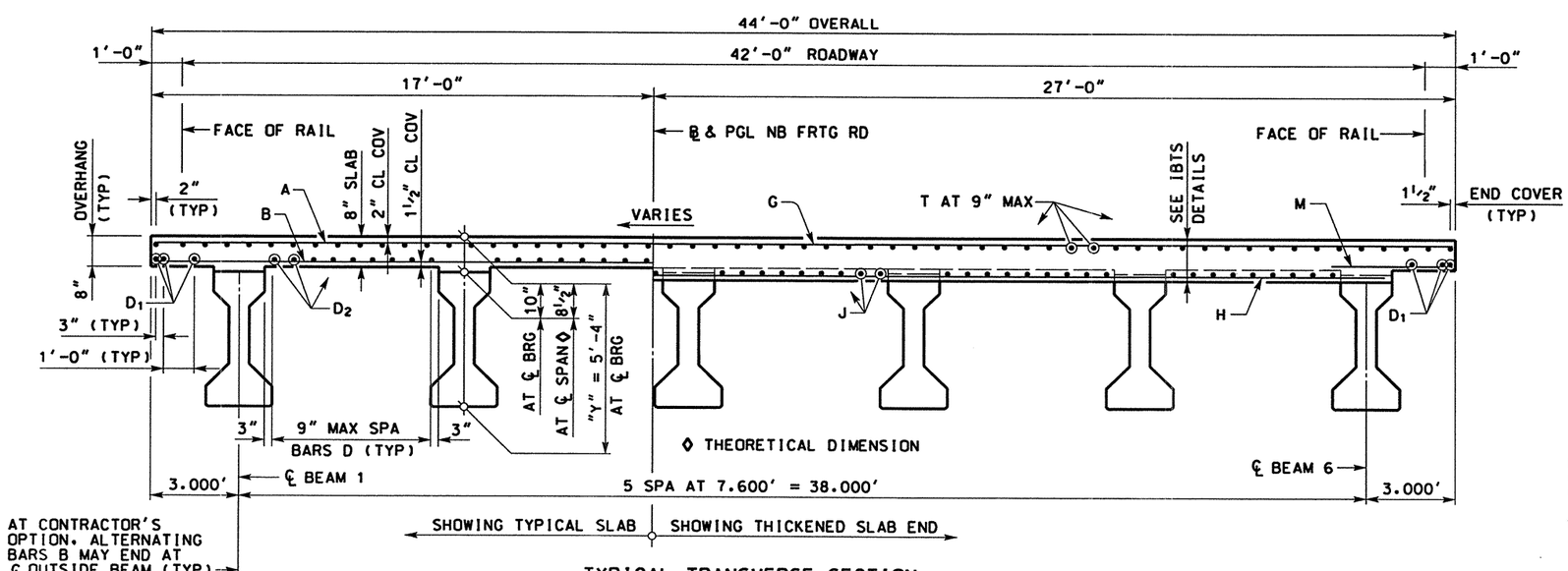

TYPICAL TRANSVERSE SECTION
SCALE: 1"= 5'

SPAN	"A"	"B"
	FT	FT
4-5	0.1348	0.1892

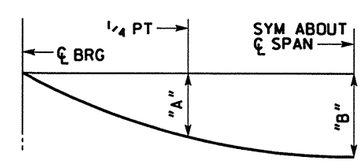

DEAD LOAD DEFLECTION DIAGRAM

NOTE: DEFLECTIONS SHOWN ARE DUE TO CONCRETE SLAB ONLY. ($E_c = 5 \times 10^6$ PSI) CALCULATED DEFLECTIONS SHOWN ARE THEORETICAL AND ACTUAL DIMENSIONS ~~MAY BE~~ LESS. DEFLECTIONS ~~SHALL BE~~ ADJUSTED BASED ON FIELD OBSERVATIONS.

0 5 10
SCALE: 1" = 10'

STATE OF TEXAS
JAMES B. HORNSBY
P. 81485
REGISTERED PROFESSIONAL ENGINEER

THE SEAL APPEARING ON THIS DOCUMENT WAS AUTHORIZED BY JAMES B. HORNSBY PE 81485, ON JUNE 02, 2003

KBR
Engineered by KBR Technical Services, Inc

©2003 Texas Department of Transportation

IH 35
LOOP 20 TO UNIROYAL ROAD
NB FRONTAGE ROAD
230.00' PRESTRESSED CONC BEAM UNIT
(SPAN 4-5)

SHEET 1 OF 1

FED RD DIV NO	FEDERAL AID PROJECT NO		SHEET NO
6	NH-2002 (79)		642
STATE	STATE DIST		COUNTY
TEXAS	LAREDO		WEBB
CONT	SECT	JOB	HIGHWAY NO
0018	05	062, ETC	IH 35

6/4/2003

REF FILE(S): J01LOP01.BDR, BDR LV ON = 14,48,57,58,60-62

b70sip03.dgn-11 HOUFILE023 \hciwh\c10130\

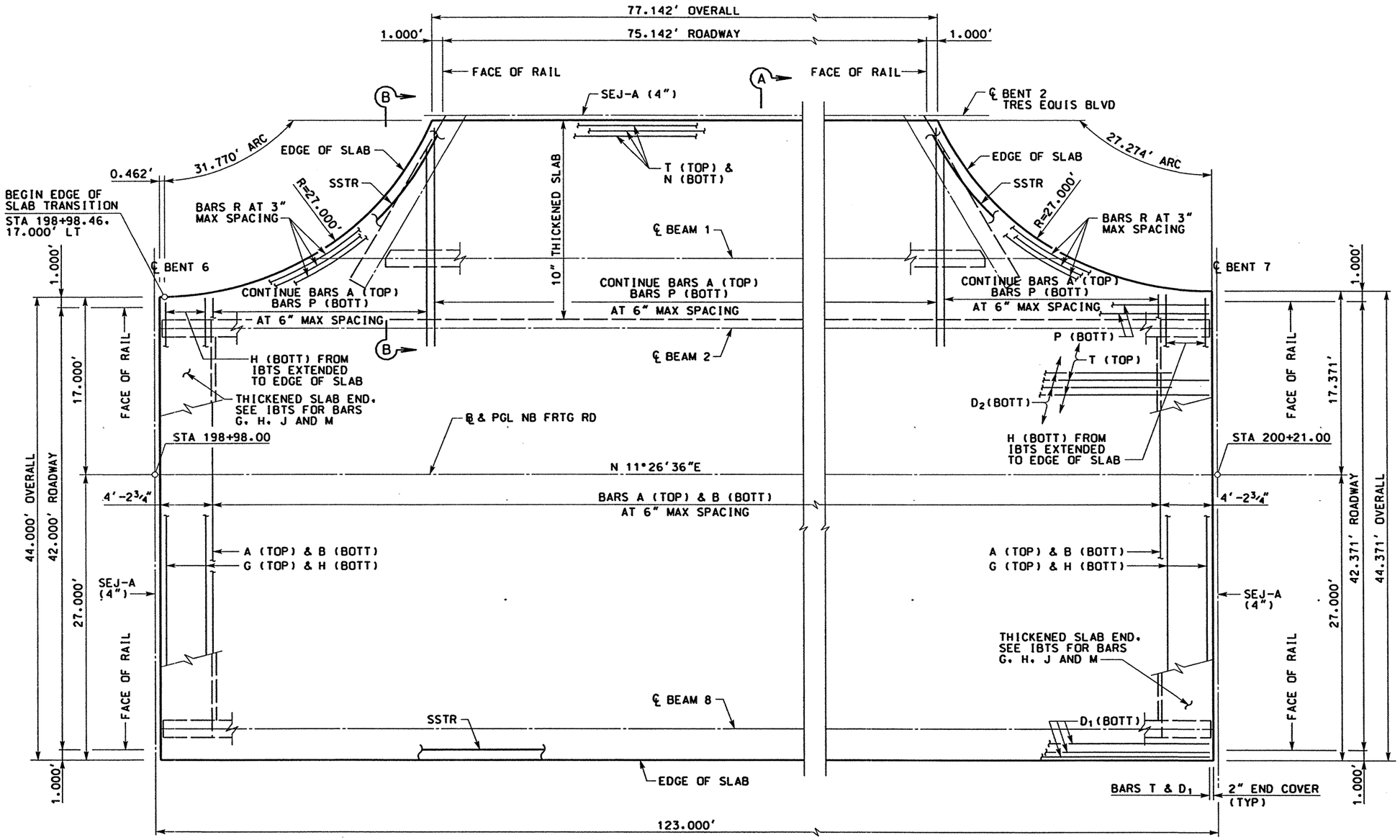

PLAN

HS25 LOADING

0 5 10
SCALE: 1" = 10'

STATE OF TEXAS
JAMES B. HORNSBY
81485
REGISTERED PROFESSIONAL ENGINEER

THE SEAL APPEARING ON THIS DOCUMENT WAS AUTHORIZED BY JAMES B. HORNSBY PE 81485, ON APRIL 18, 2003

KBR
Engineered by KBR Technical Services, Inc

©2003 Texas Department of Transportation

IH 35
LOOP 20 TO UNIROYAL ROAD
NB FRONTAGE ROAD
123.00' PRESTRESSED CONC BEAM UNIT
(SPAN 6)

SHEET 1 OF 3

FED RD DIV NO	FEDERAL AID PROJECT NO		SHEET NO
6	NH-2002 (79)		643
STATE	STATE DIST		COUNTY
TEXAS	LAREDO		WEBB
CONT	SECT	JOB	HIGHWAY NO
0018	05	062, ETC	IH 35

REF FILE(S): J01LOP01.BDR, BDR LV ON = 14,48,57,58,60-62

b70slp06.dgn-09 HOUFILE023 \hcivil\cf0130\ 4/18/2003

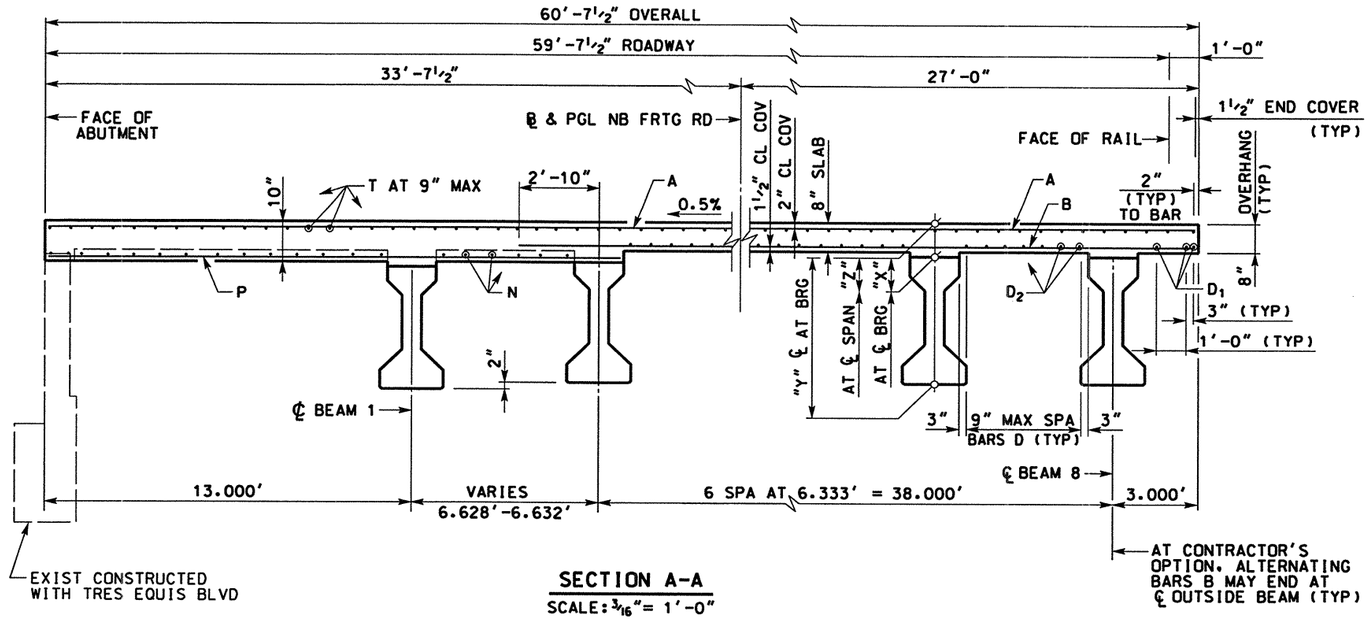

SECTION A-A

SCALE: 3/16" = 1'-0"

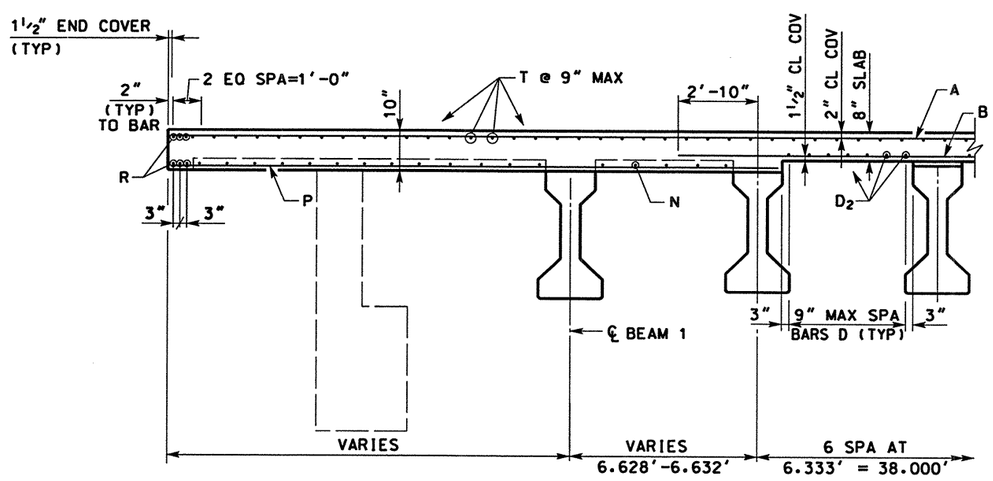

SECTION B-B

SCALE: 3/16" = 1'-0"

BAR TABLE	
BAR	SIZE
A	#5
B	#5
D	#5
G	#5
H	#5
J	#5
M	#5
T	#4
P	#5
R	#5
N	#5

TABLE OF ESTIMATED QUANTITIES				
SPAN	REINF CONCRETE SLAB	PRESTRESSED CONCRETE BEAMS (TY IV)	CLASS "S" CONCRETE †	TOTAL REINF STEEL *†
	SF	LF	CY	LB
6	6934	947.11	171.2	45.071

* REINFORCING STEEL WEIGHT IS CALCULATED USING AN APPROXIMATE FACTOR OF 6.5 LBS/SF.

† FOR CONTRACTOR'S INFORMATION ONLY.

NOTES:

1. DESIGNED ACCORDING TO CURRENT AASHTO STANDARD AND INTERIM SPECIFICATIONS.
2. SEE IBTS STANDARD FOR THICKENED SLAB END DETAILS AND QUANTITY ADJUSTMENTS.
3. SEE PCP(C) OR PMDF(C) STANDARDS FOR DETAILS AND QUANTITY ADJUSTMENTS IF EITHER OF THESE OPTIONS ARE USED. PCP(C) AND PMDF(C) ARE NOT ALLOWED BETWEEN BEAMS 1 & 2.
4. ALL REINFORCING ~~SHALL BE~~ GRADE 60.
5. CONCRETE STRENGTH F'c = 4.000 PSI.
6. BAR LAPS, WHERE REQUIRED, ~~SHALL BE~~ AS FOLLOWS:

UNCOATED	~ #4	= 1'-5"
	~ #5	= 1'-9"
EPOXY COATED	~ #4	= 2'-1"
	~ #5	= 2'-7"

TABLE OF SECTION DEPTHS			
BEAM	"X" AT ℄ BRG	"Y" AT ℄ BRG	"Z" AT ℄ BRG ◊
1	12"	5'-6"	11"
2-8	10"	5'-4"	9¼"

◊ THEORETICAL DIMENSION

SPAN	BEAM	"A"	"B"
		FT	FT
6	1	0.1240	0.1740
6	2	0.1506	0.2113
6	3-8	0.1471	0.2065

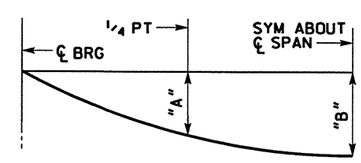

DEAD LOAD DEFLECTION DIAGRAM

NOTE: DEFLECTIONS SHOWN ARE DUE TO CONCRETE SLAB ONLY. ($E_c = 5 \times 10^6$ PSI) CALCULATED DEFLECTIONS SHOWN ARE THEORETICAL AND ACTUAL DIMENSIONS MAY BE LESS. DEFLECTIONS ~~SHALL BE~~ ADJUSTED BASED ON FIELD OBSERVATIONS.

HS25 LOADING

STATE OF TEXAS — JAMES B. HORNSBY 81485 — REGISTERED PROFESSIONAL ENGINEER

THE SEAL APPEARING ON THIS DOCUMENT WAS AUTHORIZED BY JAMES B. HORNSBY PE 81485, ON JUNE 02, 2003

KBR
Engineered by KBR Technical Services, Inc

©2003 Texas Department of Transportation

IH 35
LOOP 20 TO UNIROYAL ROAD
NB FRONTAGE ROAD
123.00' PRESTRESSED CONC BEAM UNIT
(SPAN 6)

SHEET 2 OF 3

FED RD DIV NO	FEDERAL AID PROJECT NO		SHEET NO
6	NH-2002 (79)		644
STATE	STATE DIST		COUNTY
TEXAS	LAREDO		WEBB
CONT	SECT	JOB	HIGHWAY NO
0018	05	062, ETC	IH 35

REF FILE(S): J01LOP01.BDR, BDR LV ON = 48.57.58.60-62

HOUFILE023 \hcivil\cf0130\ b70sdp01.dgn-08 6/4/2003

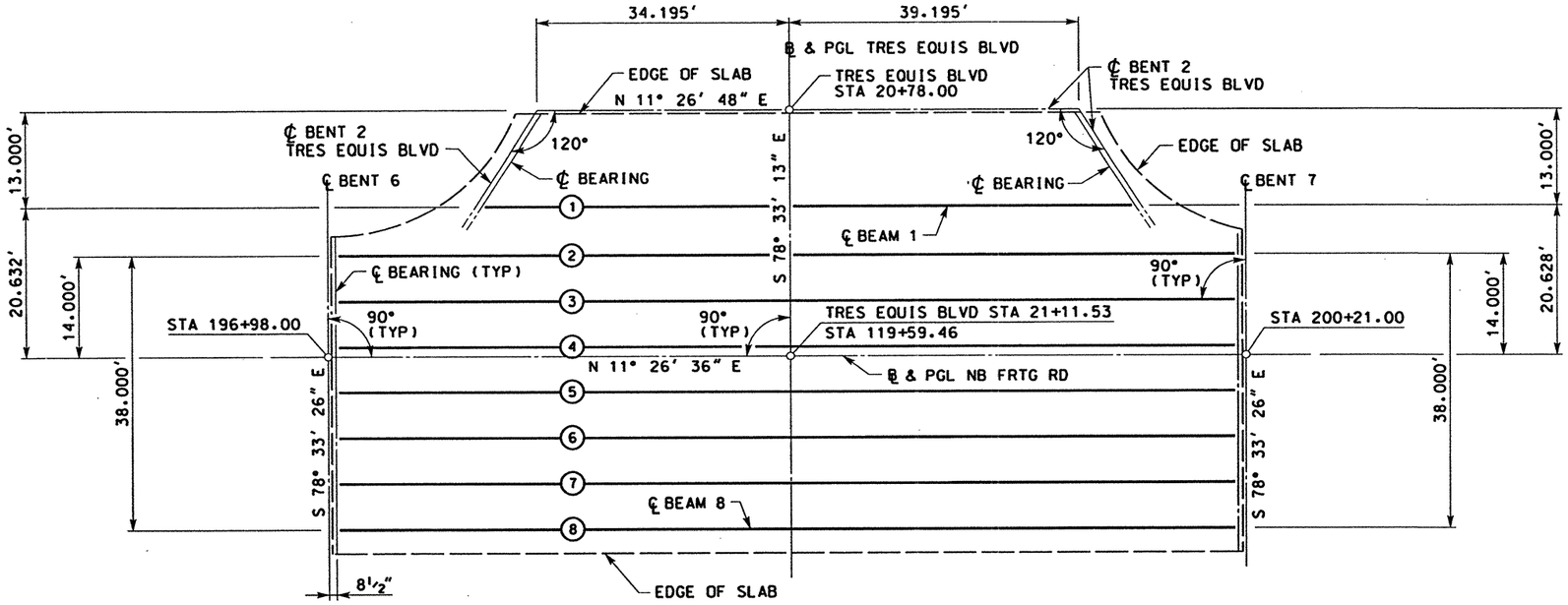

SPAN 6

TY IV BEAMS

NOTE:

BEAM 1 SITS ON BENT 2 OF TRES EQUIS BLVD BRIDGE.

BEAM REPORT				
SPAN	BEAMS	HORIZONTAL DISTANCE		TRUE DISTANCE BOT BM FLG **
		C-C BENT	C-C BRG	
6	1	88.710	87.483	88.42
6	2-8	123.000	121.583	122.67

** BEAM LENGTH SHOWN IS BOTTOM BEAM FLANGE LENGTH WITH ADJUSTMENT MADE FOR BEAM SLOPE

HS25 LOADING

STATE OF TEXAS
JAMES B. HORNSBY
81485
REGISTERED PROFESSIONAL ENGINEER

THE SEAL APPEARING ON THIS DOCUMENT WAS AUTHORIZED BY JAMES B. HORNSBY PE 81485, ON APRIL 18, 2003

KBR

Engineered by KBR Technical Services, Inc

©2003 Texas Department of Transportation

IH 35
LOOP 20 TO UNIROYAL ROAD

NB FRONTAGE RD
123.00' PRESTRESSED CONC
BEAM UNIT
(SPAN 6)

SHEET 3 OF 3

FED RD DIV NO	FEDERAL AID PROJECT NO		SHEET NO
6	NH-2002 (79)		645
STATE	STATE DIST		COUNTY
TEXAS	LAREDO		WEBB
CONT	SECT	JOB	HIGHWAY NO
0018	05	062, ETC	IH 35

REF FILE(S): j01lpp01.bdr, bdr LV ON = 5,45,57,60-63

b70fpp01.dgn-08 HOUFILE023 \hcivil\cr10130\ 4/18/2003

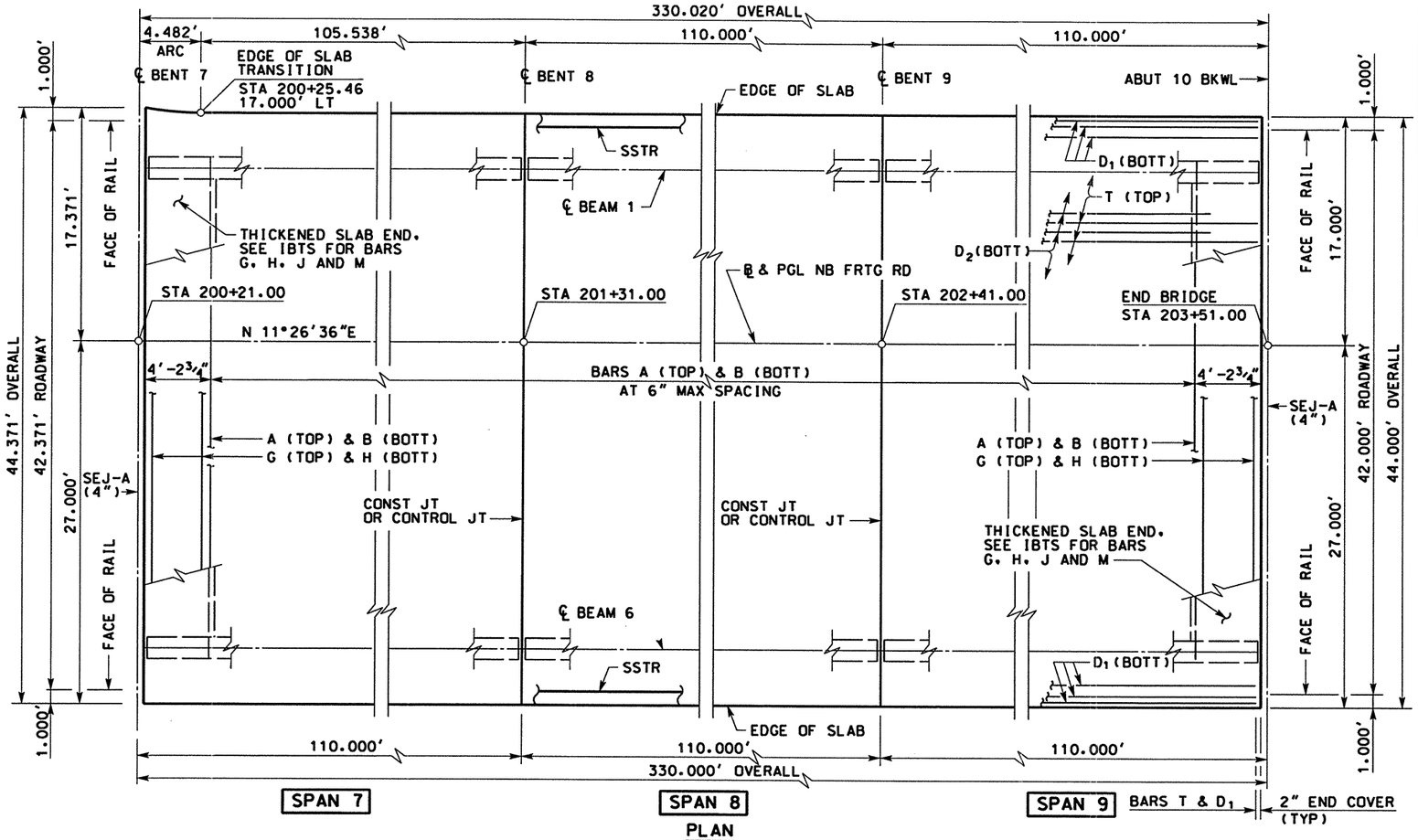

PLAN

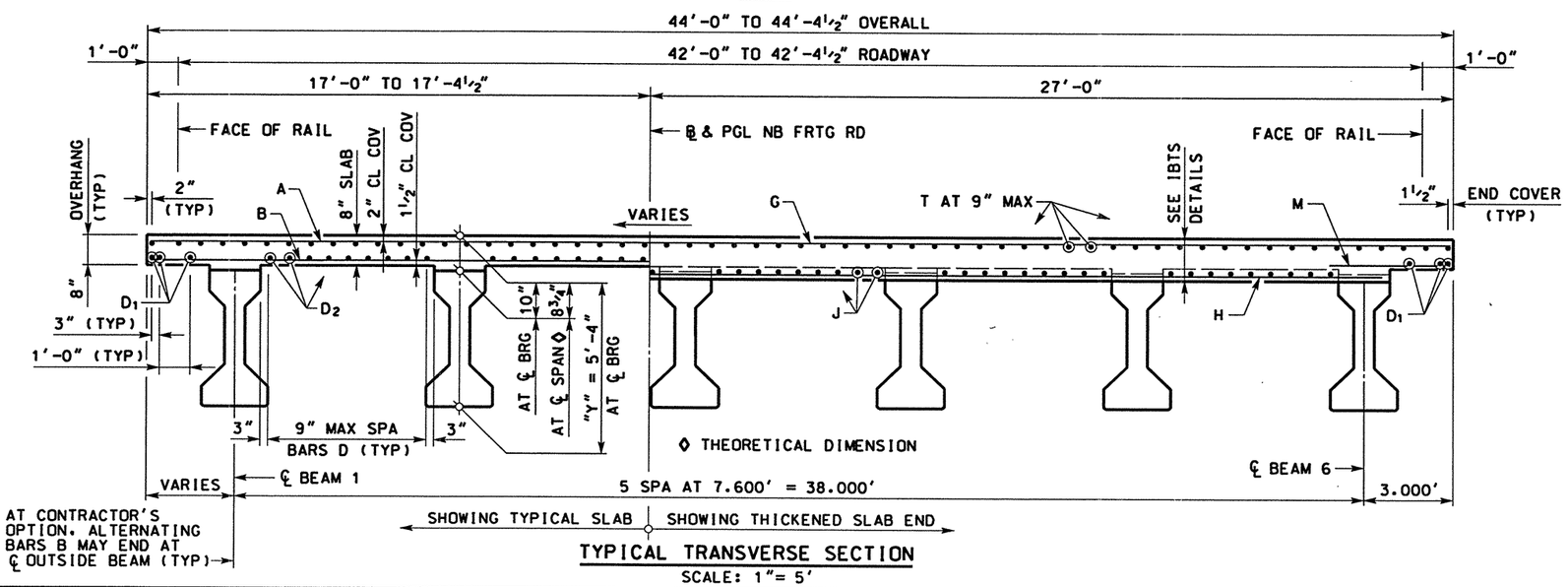

TYPICAL TRANSVERSE SECTION

SCALE: 1"= 5'

BAR TABLE

BAR	SIZE
A	#5
B	#5
D	#5
G	#5
H	#5
J	#5
M	#5
T	#4

TABLE OF ESTIMATED QUANTITIES

SPAN	REINF CONCRETE SLAB	PRESTRESSED CONCRETE BEAMS (TY IV)	CLASS "S" CONCRETE †	TOTAL REINF STEEL *†
	SF	LF	CY	LB
7	4841	658.02	133.5	31.467
8	4840	658.08	133.5	31.460
9	4840	658.26	133.5	31.460

* REINFORCING STEEL WEIGHT IS CALCULATED USING AN APPROXIMATE FACTOR OF 6.5 LBS/SF.

† FOR CONTRACTOR'S INFORMATION ONLY.

BEAM REPORT

SPAN	BEAMS	HORIZONTAL DISTANCE		TRUE DISTANCE BOT BM FLG **
		C-C BENT	C-C BRG	
7	ALL	110.000	108.583	109.67
8	ALL	110.000	108.583	109.68
9	ALL	110.000	108.583	109.71

** BEAM LENGTH SHOWN IS BOTTOM BEAM FLANGE LENGTH WITH ADJUSTMENT MADE FOR BEAM SLOPE

NOTES:

1. DESIGNED ACCORDING TO CURRENT AASHTO STANDARD AND INTERIM SPECIFICATIONS.
2. SEE IBTS STANDARD FOR THICKENED SLAB END DETAILS AND QUANTITY ADJUSTMENTS.
3. SEE PCP(C) OR PMDF(C) STANDARDS FOR DETAILS AND QUANTITY ADJUSTMENTS IF EITHER OF THESE OPTIONS ARE USED.
4. ALL REINFORCING ~~SHALL BE~~ GRADE 60.
5. CONCRETE STRENGTH F'c = 4,000 PSI.
6. BAR LAPS, WHERE REQUIRED, ~~SHALL BE~~ AS FOLLOWS:
   UNCOATED ~ #4 = 1'-5"
   ~ #5 = 1'-9"
   EPOXY COATED ~ #4 = 2'-1"
   ~ #5 = 2'-7"

HS25 LOADING

SPAN	"A"	"B"
	FT	FT
7-9	0.1128	0.1583

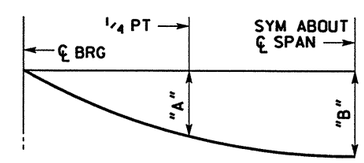

DEAD LOAD DEFLECTION DIAGRAM

NOTE: DEFLECTIONS SHOWN ARE DUE TO CONCRETE SLAB ONLY. ($E_c = 5 \times 10^6$ PSI) CALCULATED DEFLECTIONS SHOWN ARE THEORETICAL AND ACTUAL DIMENSIONS ~~MAY BE~~ LESS. DEFLECTIONS ~~SHALL BE~~ ADJUSTED BASED ON FIELD OBSERVATIONS.

0 5 10
SCALE: 1" = 10'

STATE OF TEXAS JAMES B. HORNSBY 81485 REGISTERED PROFESSIONAL ENGINEER

THE SEAL APPEARING ON THIS DOCUMENT WAS AUTHORIZED BY JAMES B. HORNSBY PE 81485, ON JUNE 02, 2003

KBR
Engineered by KBR Technical Services, Inc

©2003 Texas Department of Transportation

IH 35
LOOP 20 TO UNIROYAL ROAD
NB FRONTAGE ROAD
330.00' PRESTRESSED CONC BEAM UNIT
(SPAN 7-9)

SHEET 1 OF 1

FED RD DIV NO	FEDERAL AID PROJECT NO		SHEET NO
6	NH-2002 (79)		646
STATE	STATE DIST		COUNTY
TEXAS	LAREDO		WEBB
CONT	SECT	JOB	HIGHWAY NO
0018	05	062, ETC	IH 35

6/4/2003
HOUFILE023 \hcivil\cf0130\
b70slp04.dgn-12

REF FILE(S): J01LOP01.BDR, BDR LV ON = 14.48.57.58.60-62

DESIGNED BEAMS (DEPRESSED STRANDS)

STRUCTURE	SPAN NO	BEAM NO	BEAM TYPE	NON-STD STRAND PATTERN	PRESTRESSING STRANDS TOTAL NO	TOTAL SIZE (in)	TOTAL STRGTH f's (ksi)	TOTAL "e" ℄ (in)	TOTAL "e" END (in)	DEPRESSED NO	DEPRESSED TO (in)	CONCRETE RELEASE STRGTH f'ci (psi)	CONCRETE MINIMUM 28 DAY COMP STRGTH f'c (psi)	OPTIONAL DESIGN DESIGN LOAD COMP STRESS (TOP ℄) fct(psi)	DESIGN LOAD TENSILE STRESS (BOTT ℄) fcb(psi)	REQUIRED MINIMUM ULTIMATE MOMENT CAPACITY (ft-kips)
NB FRONTAGE RD	1-5	ALL	IV		68	0.5	270	17.40	8.93	18	50	6684	8062	4243	-4826	8273
	7-9	ALL	IV		58	0.5	270	18.68	10.41	12	52	6112	7030	3898	-4466	7724
	6	1	IV		66	0.5	270	17.72	10.93	16	44	7112	7137	3885	-4681	8514
	6	2	IV		76	0.5	270	15.75	6.86	26	52	6847	9816	4753	-5149	8402
	6	3-8	IV		68	0.5	270	17.40	8.40	18	52	6543	8682	4505	-4910	8068

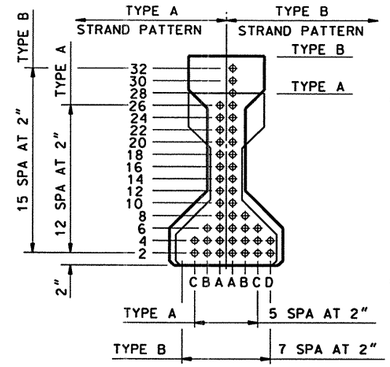

TYPE A & TYPE B BMS

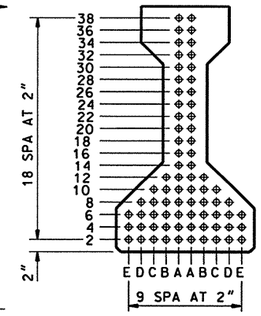

TYPE C BM

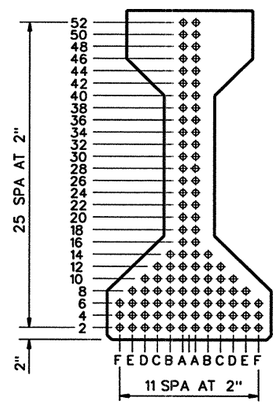

TYPE IV BM
(AASHTO TYPE IV BM)

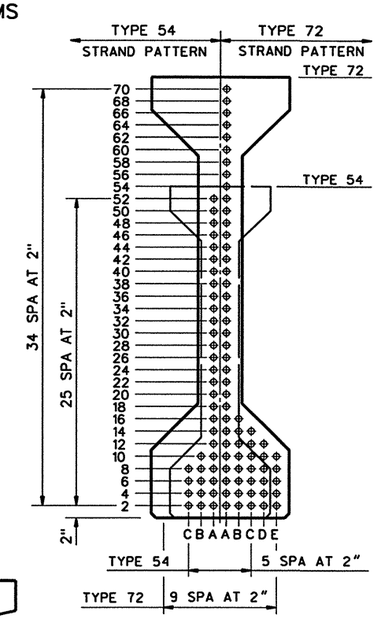

TYPE 54 & TYPE 72 BMS

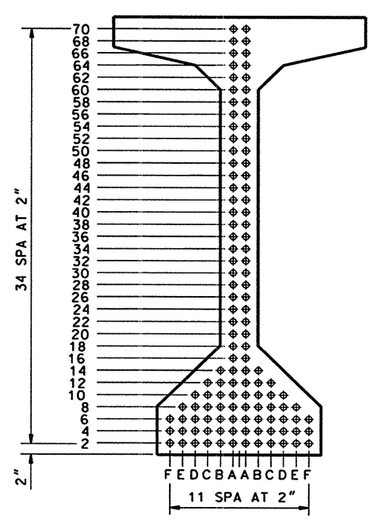

TYPE VIM BM
(AASHTO TYPE VI(MOD) BM)

OPTIONAL DESIGN

DESIGN LOAD COMP STRESS (TOP ℄) fct(psi)	DESIGN LOAD TENSILE STRESS (BOTT ℄) fcb(psi)	REQUIRED MINIMUM ULTIMATE MOMENT CAPACITY (ft-kips)
4243	-4826	8273
3898	-4466	7724
3885	-4681	8514
4753	-5149	8402
4505	-4910	8068

NON-STANDARD STRAND PATTERNS

PATTERN	STRAND ARRANGEMENT AT ℄ OF BEAM

GENERAL NOTES:

DESIGNED IN ACCORDANCE WITH CURRENT AASHTO STANDARD SPECIFICATIONS.

ALL CONCRETE ~~SHALL BE~~ CLASS H. ALL REINFORCING BARS ~~SHALL BE~~ GRADE 60.

WHEN SHOWN ON THIS SHEET, THE FABRICATOR HAS THE OPTION OF FURNISHING EITHER THE DESIGNED DEPRESSED STRAND BEAM OR AN APPROVED OPTIONAL DESIGN. ALL OPTIONAL DESIGN SUBMITTALS AND SHOP DRAWINGS ~~SHALL BE~~ SIGNED, SEALED AND DATED BY A REGISTERED PROFESSIONAL ENGINEER.

OPTIONAL DESIGNS FOR BEAMS 120 FEET OR LONGER SHALL HAVE A CALCULATED RESIDUAL CAMBER EQUAL TO OR GREATER THAN THAT OF THE DESIGNED BEAM.

PRESTRESS LOSSES FOR THE DESIGNED BEAMS HAVE BEEN CALCULATED FOR A RELATIVE HUMIDITY OF 65 PERCENT. OPTIONAL DESIGNS SHALL LIKEWISE CONFORM.

CERTAIN BEAMS WITH DEPRESSED STRANDS ARE SUBJECT TO CRACKING IN THE END OF THE BEAM. WHEN SUCH CRACKS OCCUR, ALL SUBSEQUENT BEAMS OF THE SAME TYPE AND STRAND PATTERN SHALL HAVE STRANDS DEBONDED IN THE FOLLOWING MANNER:

1. ALTERNATE ROWS OF DEPRESSED STRANDS ~~SHALL BE~~ DEBONDED FOR TWO FEET FROM EACH END OF THE BEAM.
2. ONE HALF OF THE STRAIGHT STRANDS, AS NEARLY AS POSSIBLE, ~~SHALL BE~~ DEBONDED FOR FOUR FEET FROM EACH END OF THE BEAM.
3. THE DEBONDING PATTERN ~~SHALL BE~~ SYMMETRICAL ABOUT THE VERTICAL AXIS OF THE BEAM FOR BOTH DEPRESSED AND STRAIGHT STRANDS.
4. STRANDS ~~SHALL BE~~ DEBONDED SO THAT THE CENTERS OF GRAVITY OF THE DEPRESSED STRANDS AND THE STRAIGHT STRANDS WILL REMAIN WITHIN ONE INCH OF THEIR ORIGINAL LOCATION.
5. STRANDS ~~SHALL BE~~ ENCASED IN PLASTIC TUBING ALONG ENTIRE DEBONDED LENGTH, AND ENDS OF TUBING ~~SHALL BE~~ SEALED WITH WATERPROOF TAPE. SPLIT PLASTIC TUBING MAY BE USED PROVIDED THE SEAM OF THE TUBING IS SUFFICIENTLY SEALED WITH WATERPROOF TAPE TO PROHIBIT GROUT INFILTRATION. WRAPPING OF STRANDS WITH TAPE TO PROVIDE DEBONDING WILL NOT BE PERMITTED.
6. REVISED SHOP DRAWINGS WILL NOT BE REQUIRED.

FOR DEPRESSED STRAND DESIGNED BEAMS, STRANDS ~~SHALL BE~~ LOCATED AS LOW AS POSSIBLE ON THE 2" GRID SYSTEM UNLESS A NON-STANDARD STRAND PATTERN IS INDICATED. FILL ROW "2", THEN ROW "4", THEN ROW "6", ETC., BEGINNING EACH ROW IN THE "A" POSITION AND WORKING OUTWARD UNTIL THE REQUIRED NUMBER OF STRANDS IS REACHED. ALL STRANDS IN THE "A" POSITION ~~SHALL BE~~ DEPRESSED, MAINTAINING THE 2" SPACING SO THAT, AT THE BEAM ENDS, THE UPPER TWO STRANDS ARE IN THE POSITION SHOWN IN THE TABLE.

STRANDS FOR THE DESIGNED BEAM ~~SHALL BE~~ 1/2" 270 ksi LOW RELAXATION STRANDS PRETENSIONED TO 31.0 k EACH.

THE SEAL APPEARING ON THIS DOCUMENT WAS AUTHORIZED BY JAMES B. HORNSBY P.E. 81485, ON APRIL 18, 2003

HS25 LOADING

SHEET 1 OF 1

KBR
Engineered by KBR Technical Services, Inc

©2003 Texas Department of Transportation

PRESTRESSED CONCRETE BEAMS
(NON-STANDARD SPANS)

IBNS

FILE: ibstd005.dgn	DN: SRT	CK: JBH	DW: JAM	CK: SRT
ORIG DATE:	DIST	FED REG	FEDERAL AID PROJECT	SHEET
REVISIONS	22	6	NH-2002 (79)	647

COUNTY	CONTROL	SECT	JOB	HIGHWAY
WEBB	0018	05	062, ETC	IH 35

4/21/2003 \HCIVIL\CF0130\ HOUFILE023 b70bdp15.DGN-02

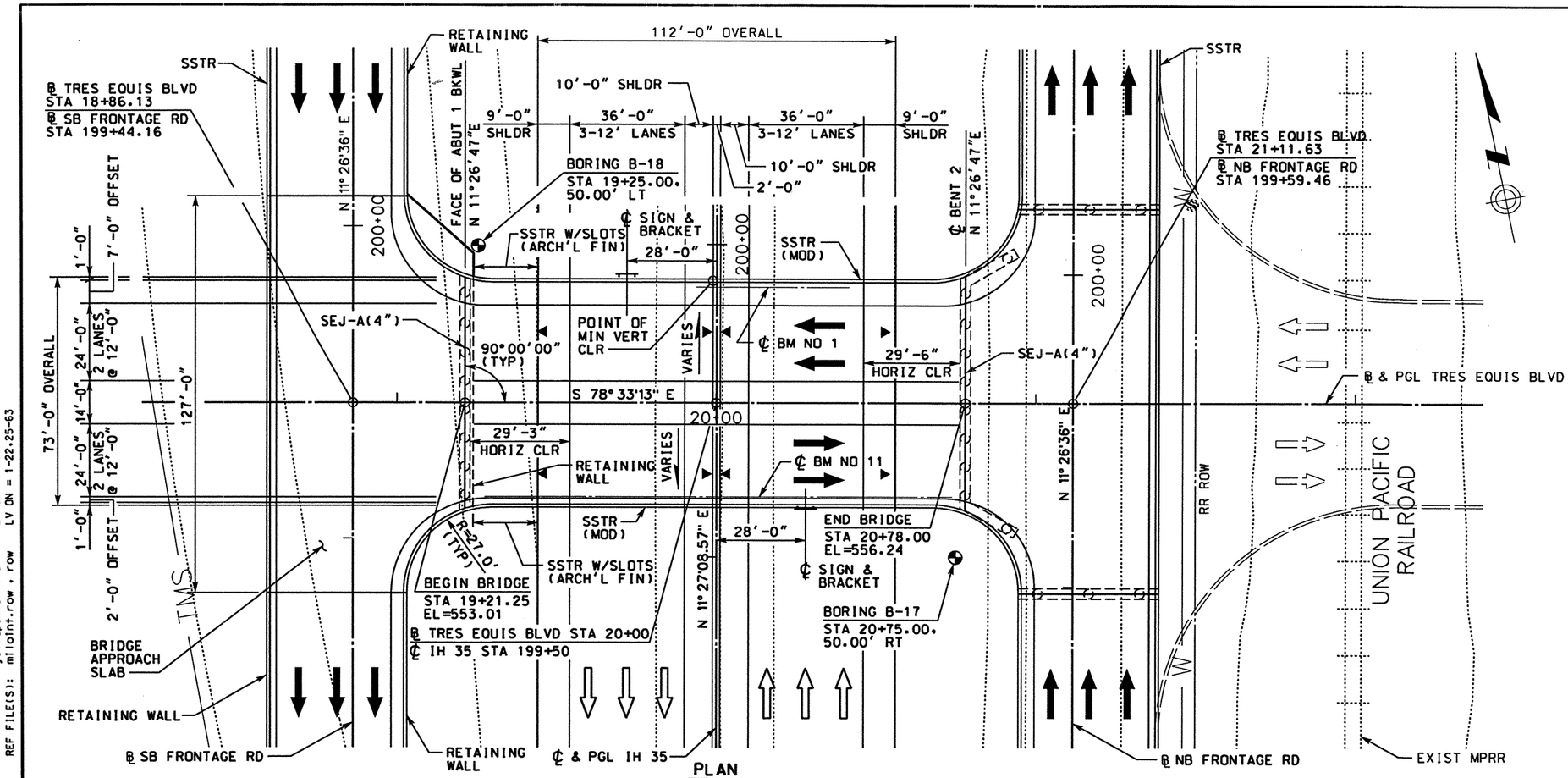

PLAN

GENERAL NOTES:

1. DESIGNED ACCORDING TO 1996 AASHTO STANDARD SPECIFICATION AND INTERIMS THERETO (HS25 LOADING).
2. BEAM END CONDITIONS:
   D: DENOTES A SLOTTED HOLE AT EXTERIOR BEAM END.
   BLANK: DENOTES NO HOLE AT BEAM END.
3. FOR BORING LOGS, SEE "BORING LOGS" SHEETS.
4. DRILLED SHAFTS ARE DESIGNED WITH POINT BEARING AND SKIN FRICTION.

▶ UNDERPASS BRIDGE LIGHTING

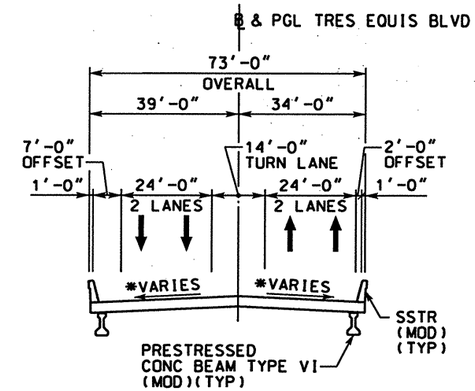

TYPICAL SUPER-STRUCTURE SECTION
NTS

*VARIES SEE TRES EQUIS BLVD CONTOUR GRADING PLAN

DESIGN SPEED: 35 MPH
ADT: 4850(2003)8400(2023)
RFC: URBAN LOCAL STREET
NBI: 22-240-0-0018-05-176

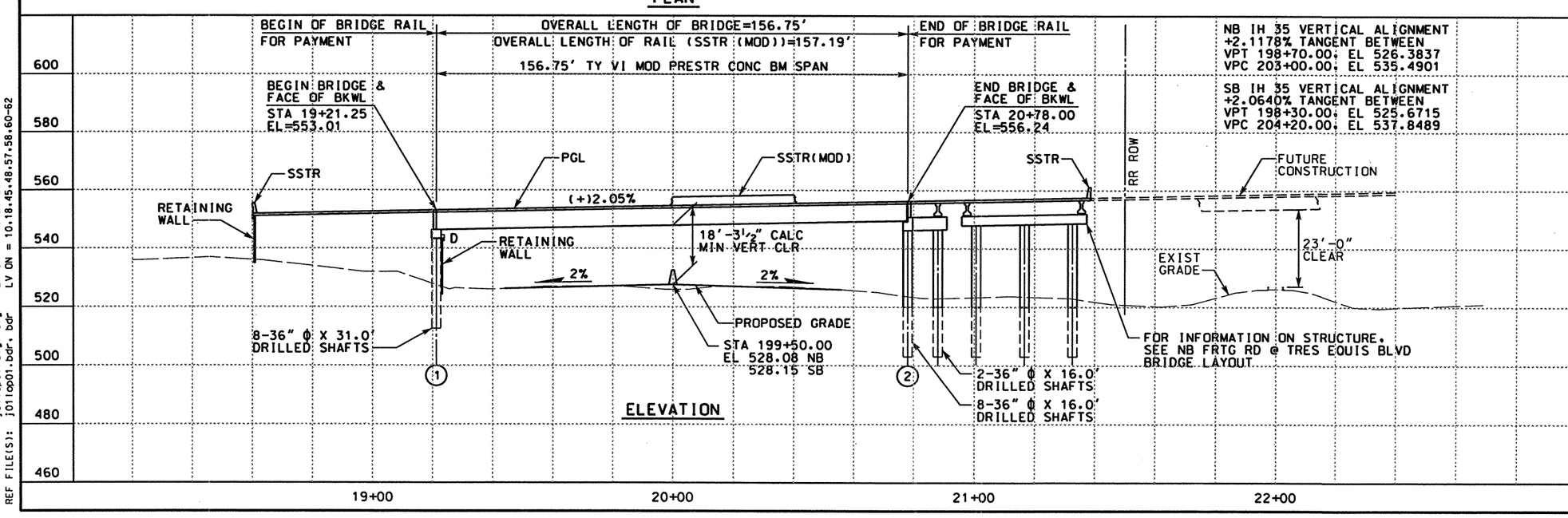

ELEVATION

0 20 40
SCALE: 1" = 40'

STATE OF TEXAS JAMES B. HORNSBY 81485 REGISTERED PROFESSIONAL ENGINEER

THE SEAL APPEARING ON THIS DOCUMENT WAS AUTHORIZED BY JAMES B. HORNSBY PE 81485, ON JUNE 09, 2003

KBR
Engineered by KBR Technical Services, Inc

©2003 Texas Department of Transportation

IH 35
LOOP 20 TO UNIROYAL ROAD
TRES EQUIS BLVD
UNDERPASS
BRIDGE LAYOUT

SHEET 1 OF 1

FED RD DIV NO	FEDERAL AID PROJECT NO		SHEET NO
6	NH-2002 (79)		648
STATE	STATE DIST		COUNTY
TEXAS	LAREDO		WEBB
CONT	SECT	JOB	HIGHWAY NO
0018	05	062, ETC	IH 35

REF FILE(S): j01lop01.bnt, bnt LV ON = 1-63
j01lop01.row, row LV ON = 1-22,25-63

REF FILE(S): j01lop01.utl, utl LV ON = 1-63
j01lop01.eop, eop LV ON = 1-17,19-63
j01lop01.bck, bck LV ON = 2,9,10,14,17,20,21,25,28,31
j01lop01.alg, alg LV ON = 1-6,25-29
j01lop01.bdr, bdr LV ON = 10,18,45,48,57,58,60-62

6/9/2003
HOUFILE023 \hcivil\c10130\
b70ppp02.dgn-16

SUMMARY OF BRIDGE QUANTITIES

DESCRIPTION	416-0535 DRILLED SHAFTS (36 IN)	420-0513 CL C CONC (ABUT)	420-0514 CL C CONC (BENT)	422-0505 REINF CONC SLAB * (CL S)	425-0522 PRESTR CONC BEAM (TY VI(MOD))	428-0501 CONC SURF TREAT	440-XXXX REINF STEEL *	444-0505 SIGN & BRACKET	450-0746 RAIL SSTR (MOD)	454-0503 SEALED EXP JOINT (4 IN)	CONC STAIN FINISH *
	LF	CY	CY	SF	LF	SY	LB	EA	LF	LF	SY
1-ABUTMENT	248	50.2					7003				
1-INTERIOR BENT	160		144.8				20590				
1-PRESTR CONC BM UNIT				11466	1719.11	1239	74529	2	314.4	150	104
TOTALS	408	50.2	144.8	11466	1719.11	1239	102122	2	314.4	150	104

* FOR CONTRACTORS INFORMATION ONLY

BEARING SEAT ELEVATIONS

	BEAM 1	BEAM 2	BEAM 3	BEAM 4	BEAM 5	BEAM 6	BEAM 7	BEAM 8	BEAM 9	BEAM 10	BEAM 11
BENT 1 (FWD)	545.517	545.592	545.573	545.678	545.784	545.889	545.784	545.678	545.573	545.467	545.361
BENT 2 (BK)	548.605	548.695	548.785	548.885	548.975	549.065	549.045	548.945	548.855	548.755	548.665

STATE OF TEXAS
JAMES B. HORNSBY
81485
REGISTERED PROFESSIONAL ENGINEER

THE SEAL APPEARING ON THIS DOCUMENT WAS AUTHORIZED BY JAMES B. HORNSBY PE 81485, ON JUNE 09, 2003

KBR
Engineered by KBR Technical Services, Inc

©2003 Texas Department of Transportation

IH 35
LOOP 20 TO UNIROYAL ROAD
TRES EQUIS BLVD
QUANTITY SUMMARY/
BEARING SEAT ELEVATIONS

SHEET 1 OF 1

FED RD DIV NO	FEDERAL AID PROJECT NO		SHEET NO
6	NH-2002 (79)		649
STATE	STATE DIST		COUNTY
TEXAS	LAREDO		WEBB
CONT	SECT	JOB	HIGHWAY NO
0018	05	062, ETC	IH 35

6/9/2003
HOUFILE023 \hcivil\cf0130\
b36qsp18.dgn-09

REF FILE(S): j01lop01.bdr, bdr LV ON = 47,57,58,60-62

PROJECT: IH-35: LOOP 20 TO UNIROYAL ROAD BORING B-17

DATE 2/15/01 TYPE 4" FLIGHT AUGER LOCATION STA. 199+00:75'RT

DEPTH IN FEET	DESCRIPTION Elevation:523.4'	THD 1st 6"	THD 2nd 6"	M.C. %	U.D.W. PCF	-200 MESH	LIQUID LIMIT	PLASTIC LIMIT	PLASTICITY INDEX
0	Fill: gray clayey sand with fine gravel, clay lumps	14	16	15 17 15	109	26 51	29 33	16 16	13 17
	Stiff to hard, tan, Sandy Clay (CL), with ferrous & calcareous nodules	36	50/ 4"	16 4 10	108	14 37	18 24	12 15	6 9
12	Dense, tan Silty Sand with clay, cemented (SM-GM) -49% gravel; 37% sand; 14% fines	36	50/ 5.5"	18 21 21	103	82 73	54 45	22 19	32 26
	Hard, tan, Sandy Clay (CL), with ferrous & calcareous nodules, with clayey sand seams	42	50/ 4.5"	18 20 19	103 110	84	50 54	20 22	30 32
24	Hard, tan, Clay with sand (CH), with ferrous & calcareous nodules	50/ 5" 50/ 4"	50/ 4" 50/ 3"	16 14 19		80 88	42 47	20 18	22 29
	Hard, gray & tan, Sandy Clay (CL), with ferrous & calcareous nodules -w/ sand seam @ 16'-18'	50/ 3.5"	50/ 2"	18 20 16	108	68	31	17	14
36	Hard, tan, Clay, sandy (CH), with ferrous & calcareous nodules	50/ 2"	50/ 0.5"	27 18 18		59	34	16	18
	Hard to very hard, tan, Sandy Clay (CL), with sand seams -gray @ 30' -tan & light gray @ 34' -tan @ 36'	50/ 0.5" 50/ 0.5"	50/ 0" 50/ 0.2"	19 21 12 13		75	42	20	22
48	Very hard, dark gray, Shale	50/ 0" 50/ 0" 50/ 0" 50/ 0"	50/ 0.2" 50/ 0" 50/ 0" 50/ 0"	23 27 21 16 6					
60									
72	Bottom of hole @ 70'								

SHEAR STRENGTH, TSF

○ POCKET PENETROMETER
△ CONFINED COMPRESSION
● UNCONFINED COMPRESSION
□ TORVANE

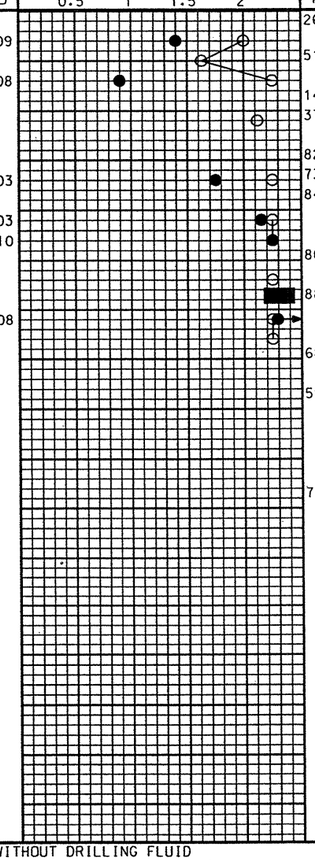

BORING DRILLED TO 75 FEET (22.86) METER WITHOUT DRILLING FLUID
WATER ENCOUNTERED AT ____ FEET (____ METER) WHILE DRILLING
WATER LEVEL AT ____ FEET (____ METER) AFTER ____ HOURS
DRILLED BY JH CHECKED BY PST LOGGED BY JH

PROJECT: IH-35 MAIN LANE WIDENING, LAREDO, TEXAS BORING B-18

DATE 2/25/01 TYPE 4" FLIGHT AUGER LOCATION STA. 200+00:75'LT

DEPTH IN FEET	DESCRIPTION Elevation:527.45'	THD 1st 6"	THD 2nd 6"	M.C. %	U.D.W. PCF	-200 MESH	LIQUID LIMIT	PLASTIC LIMIT	PLASTICITY INDEX
0	Hard, tan, Sandy Clay (CL), with ferrous & calcareous nodules, sand seams -w/roots @ surface -w/gravel @ 0'-2'	17	40	15 31 18 19	104 88	79	72 37	30 17	42 20
12	Stiff to very stiff, Clay with sand (CH), with ferrous & calcareous nodules, sand seams	42	50/ 2.5"	17 18 18	105 100	54	37	17	20
	Very stiff, tan, Sandy Clay (CL), with sand seams, calcareous nodules (0% gravel; 21% sand; 79% fines) -hard @ 6' -very stiff @ 12' -very hard @ 14'	50/ 3" 50/ 2.5" 50/ 2.5" 50/ 2.5"	50/ 1" 50/ 1.2" 50/ .5"	18 16 17 17 15 16		86 91	61	23	38
24	Gray Shale -very hard @ 18'	50/ 0" 50/ 0" 50/ 0" 50/ 0"	50/ 0" 50/ 0" 50/ 0" 50/ 0"	15 15 15 13 14 16		88 87	50 45	22 19	28 26
36		50/ 1" 50/ 0" 50/ 0" 50/ 0"	50/ 0.5" 50/ 0" 50/ 0" 50/ 0"	17 14 16 14 23 13		63 97 88	33 39 34	17 17 17	16 22 17
48		50/ 0.5" 50/ 0" 50/ 0" 50/ 0"	50/ 0" 50/ 0" 50/ 0" 50/ 0"	22 17 15 19		66 28	28 17	15 11	14
60									
72	Bottom of hole @ 70'								

SHEAR STRENGTH, TSF

○ POCKET PENETROMETER
△ CONFINED COMPRESSION
● UNCONFINED COMPRESSION
□ TORVANE

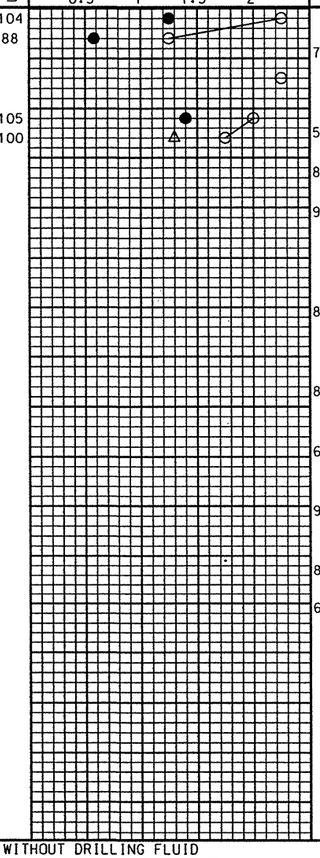

BORING DRILLED TO 70 FEET (21.34) METER WITHOUT DRILLING FLUID
WATER ENCOUNTERED AT - FEET (____ METER) WHILE DRILLING
WATER LEVEL AT - FEET (____ METER) AFTER 6 HOURS
DRILLED BY JH CHECKED BY PST LOGGED BY JH

STATE OF TEXAS
JAMES B. HORNSBY
81485
REGISTERED PROFESSIONAL ENGINEER

THE SEAL APPEARING ON THIS DOCUMENT WAS AUTHORIZED BY JAMES B. HORNSBY PE 81485, ON APRIL 18, 2003

KBR

Engineered by KBR Technical Services, Inc

©2003 Texas Department of Transportation

IH 35
LOOP 20 TO UNIROYAL ROAD

TRES EQUIS BLVD UNDERPASS SOIL BORINGS

SHEET 1 OF 1

FED RD DIV NO	FEDERAL AID PROJECT NO	SHEET NO
6	NH-2002 (79)	650
STATE	STATE DIST	COUNTY
TEXAS	LAREDO	WEBB
CONT	SECT / JOB	HIGHWAY NO
0018	05 / 062, ETC	IH 35

REF FILE(S): j01log01.bdr, bdr LV ON = 5,45,57,60-63

b70bib02.dgn-02 HOUFILE023 \hcivil\c10130\ 4/18/2003

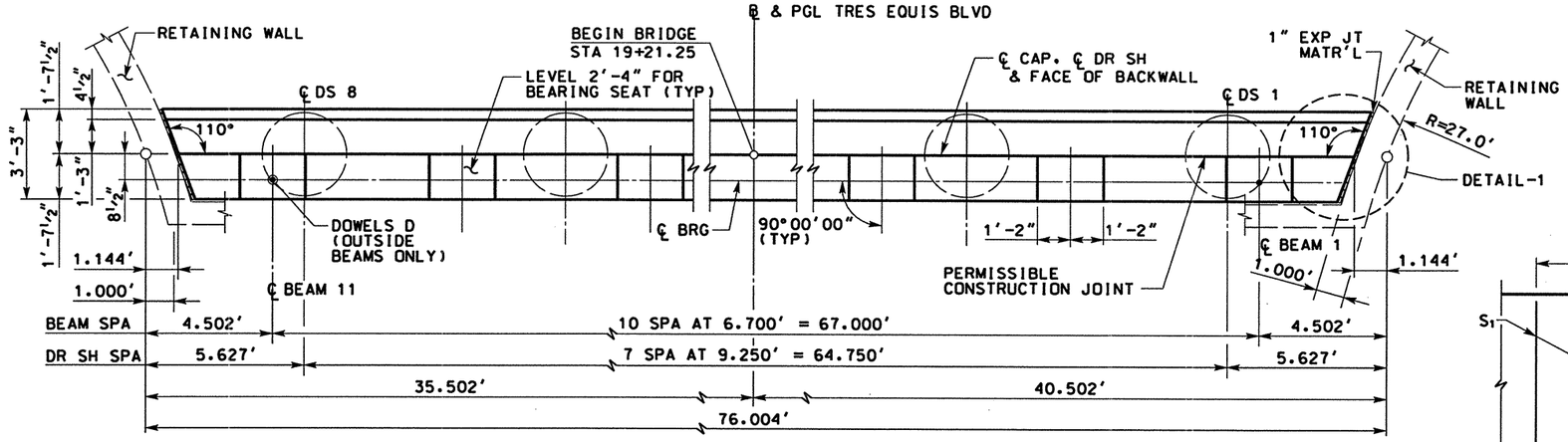

PLAN

SCALE: 3/16" = 1'-0"

DS	TOP OF DS ELEV
1	542.155
2	542.266
3	542.377
4	542.488
5	542.478
6	542.320
7	542.163
8	542.005

TABLE OF ESTIMATED QUANTITIES

BAR	NO	SIZE	LENGTH	WEIGHT
A_1	2	11	84'-4"	896
A_2	2	11	83'-5"	886
A_3	2	11	82'-5"	876
D	2	1¼ Ø	1'-8"	14
H_1	7	5	75'-7"*	552
H_2	7	5	75'-1"*	548
S_1	81	5	12'-5"	1049
S_2	2	5	12'-8"	26
S_3	2	5	12'-11"	27
T_1	5	5	75'-10"*	395
T_2	5	5	73'-11"*	385
V	75	5	17'-3"	1349
† REINFORCING STEEL			LB	7003
CLASS "C" CONC (ABUT)			CY	50.2
DRILLED SHAFT (36"Ø)			FT	248

† FOR CONTRACTOR'S INFORMATION ONLY
* INCLUDES 1'-6" LAP SPLICE

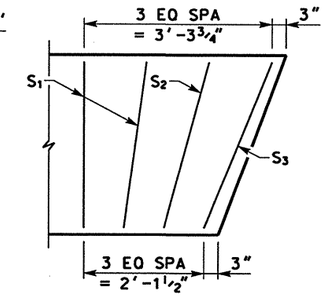

DETAIL-1

SCALE: 3/8" = 1'-0"

NOTES:

1. DESIGNED ACCORDING TO AASHTO 1996 STANDARD AND CURRENT INTERIM SPECIFICATIONS.
2. CALCULATED FOUNDATION LOADS - CAP DRILLED SHAFTS = 110 TONS/DRILLED SHAFT.
3. ALL DIMENSIONS TO THE REINFORCING STEEL ARE TO THE ℄ OF THE BAR UNLESS OTHERWISE NOTED.
4. ALL REINFORCING STEEL IN DRILLED SHAFT IS INCLUDED IN PRICE BID FOR DRILLED SHAFTS.

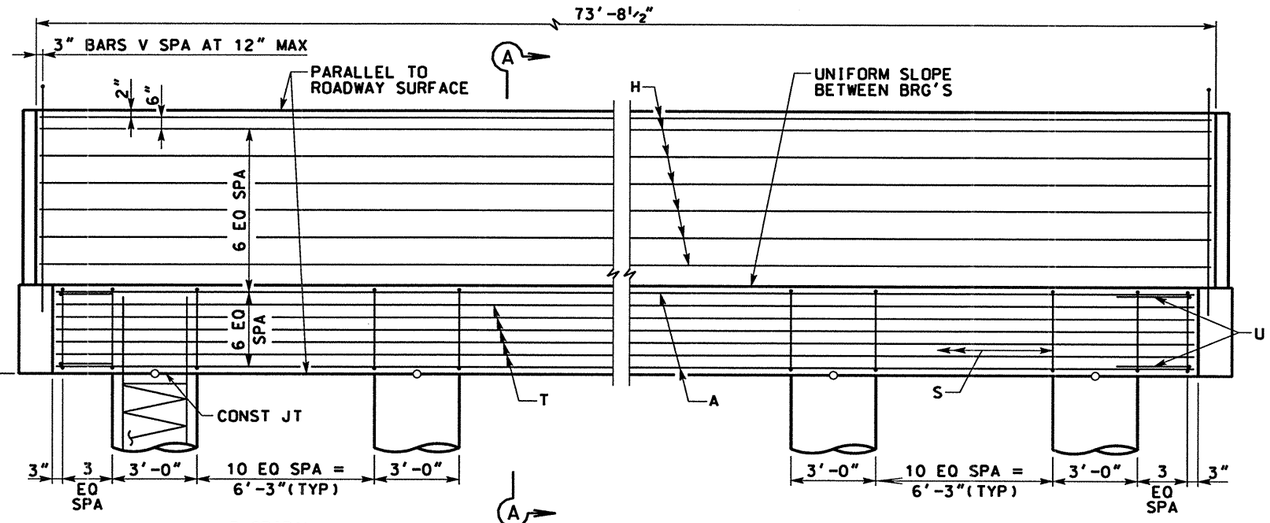

ELEVATION

SCALE: 3/16" = 1'-0"

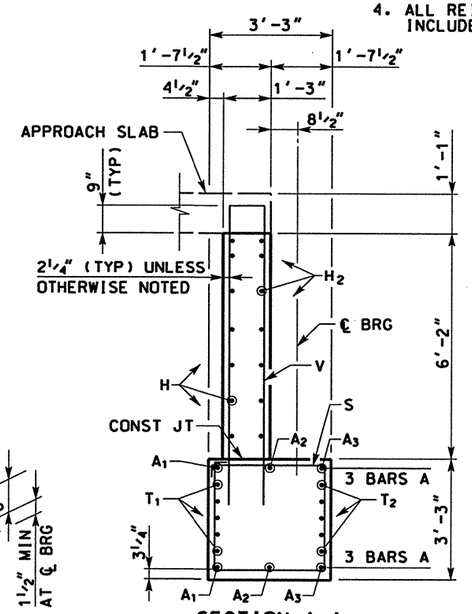

SECTION A-A

SCALE: ¼" = 1'-0"

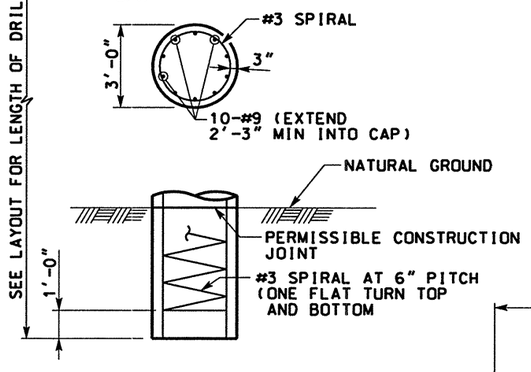

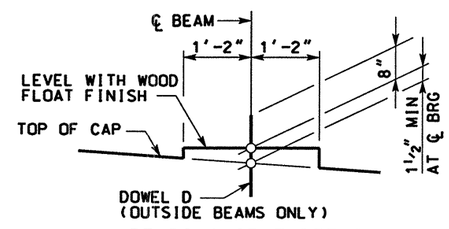

BEARING SEAT DETAIL

(BEARING SURFACE SHALL BE CLEAN AND FREE OF ALL LOOSE MATERIAL BEFORE PLACING BEARING PAD.)

	"A"	"B"
A_1	74'-4¼"	39'-4¼"
A_2	73'-4¾"	38'-4¾"
A_3	72'-5"	37'-5"

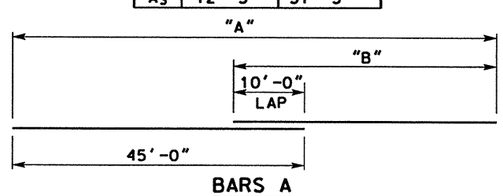

BARS A

NOTE: STAGGER LAP SPLICES

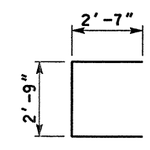

BARS U

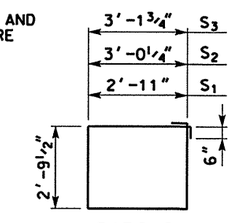

BARS S

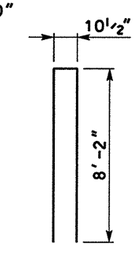

BARS V

HS25 LOADING

STATE OF TEXAS
JAMES B. HORNSBY
81485
REGISTERED PROFESSIONAL ENGINEER

THE SEAL APPEARING ON THIS DOCUMENT WAS AUTHORIZED BY JAMES B. HORNSBY PE 81485, ON JUNE 02, 2003

KBR
Engineered by KBR Technical Services, Inc

©2003 Texas Department of Transportation

IH 35
LOOP 20 TO UNIROYAL ROAD

TRES EQUIS BLVD
ABUTMENT NO 1

SHEET 1 OF 1

FED RD DIV NO	FEDERAL AID PROJECT NO	SHEET NO
6	NH-2002 (79)	651
STATE	STATE DIST	COUNTY
TEXAS	LAREDO	WEBB
CONT / SECT / JOB		HIGHWAY NO
0018 / 05 / 062, ETC		IH 35

REF FILE(S): J01LOP01.BDR, BDR LV ON = 48,57,58,60-62

b70bdp08.dgn-12 HOUFILE023 \HCIVIL\CF0130\ 6/5/2003

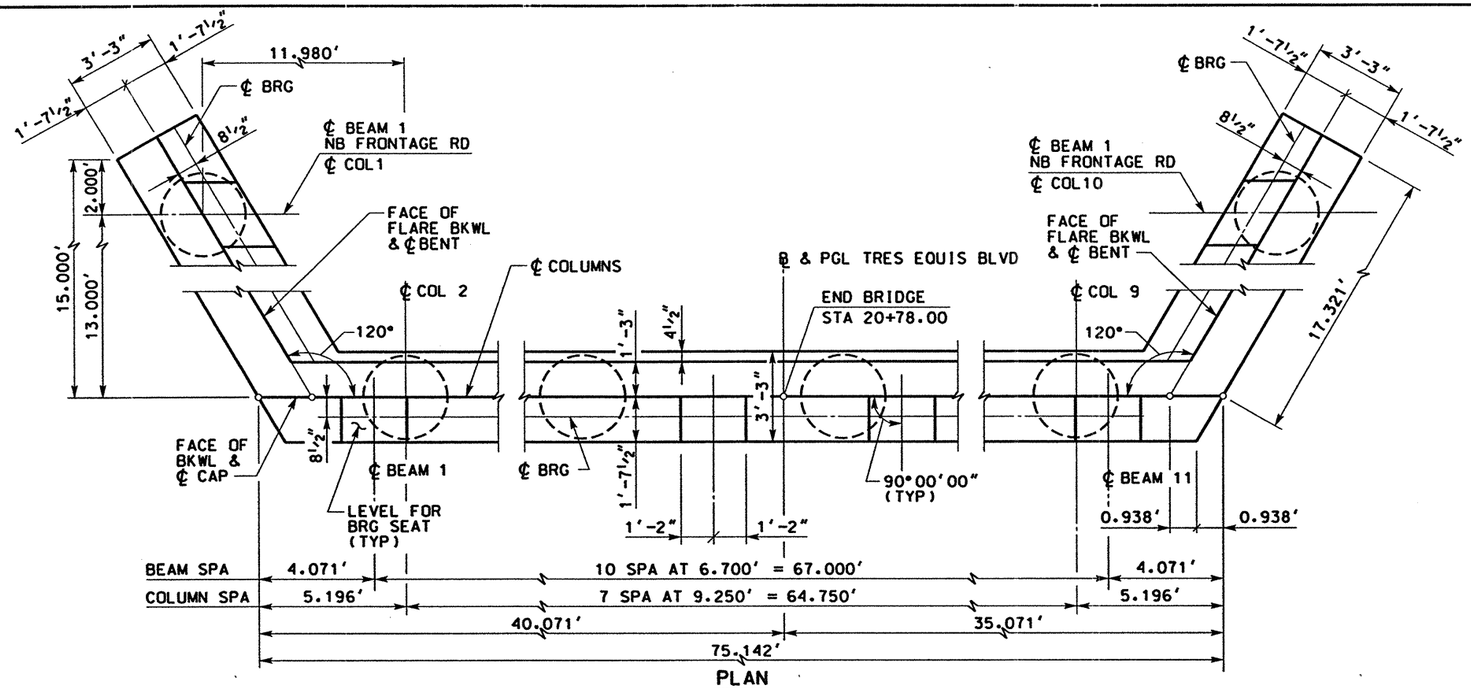

PLAN
SCALE: 3/16"=1'-0"

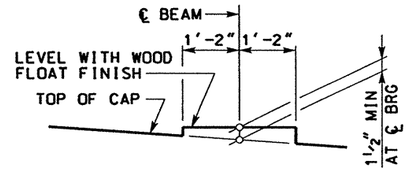

BEARING SEAT DETAIL
(BEARING SURFACE ~~SHALL BE~~ CLEAN AND FREE OF ALL LOOSE MATERIAL BEFORE PLACING BEARING PAD.)

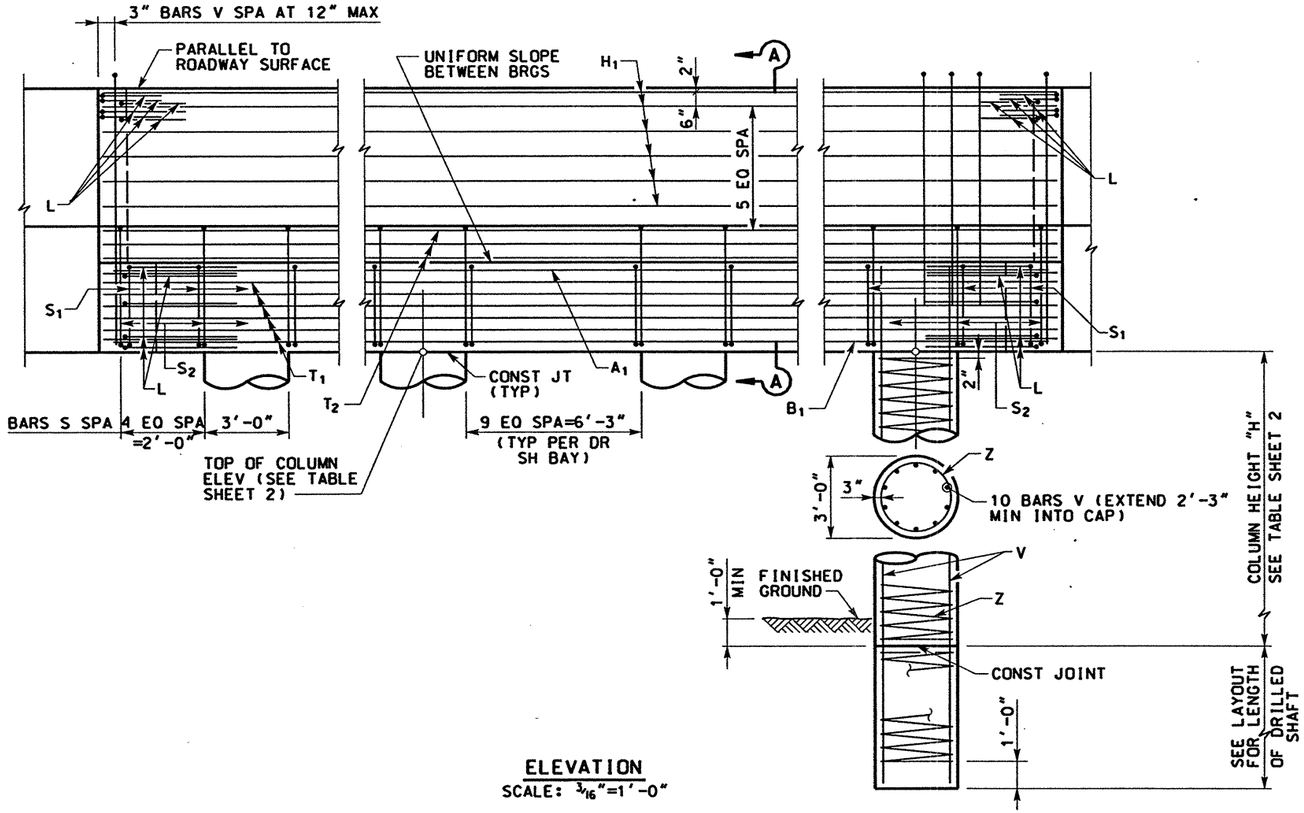

ELEVATION
SCALE: 3/16"=1'-0"

HS25 LOADING

STATE OF TEXAS
JAMES B. HORNSBY
81485
REGISTERED PROFESSIONAL ENGINEER

THE SEAL APPEARING ON THIS DOCUMENT WAS AUTHORIZED BY JAMES B. HORNSBY PE 81485, ON APRIL 18, 2003

KBR
Engineered by KBR Technical Services, Inc

©2003 Texas Department of Transportation

IH 35
LOOP 20 TO UNIROYAL ROAD
TRES EQUIS BLVD
BENT 2

SHEET 1 OF 2

FED RD DIV NO	FEDERAL AID PROJECT NO		SHEET NO
6	NH-2002 (79)		652
STATE	STATE DIST		COUNTY
TEXAS	LAREDO		WEBB
CONT	SECT	JOB	HIGHWAY NO
0018	05	062, ETC	IH 35

REF FILE(S): J01LOP01.BDR, BDR LV ON = 48.57,58.60-62

b70bdp02.dgn-07 HOUFILE023 \HCIVIL\CF0130\ 4/18/2003

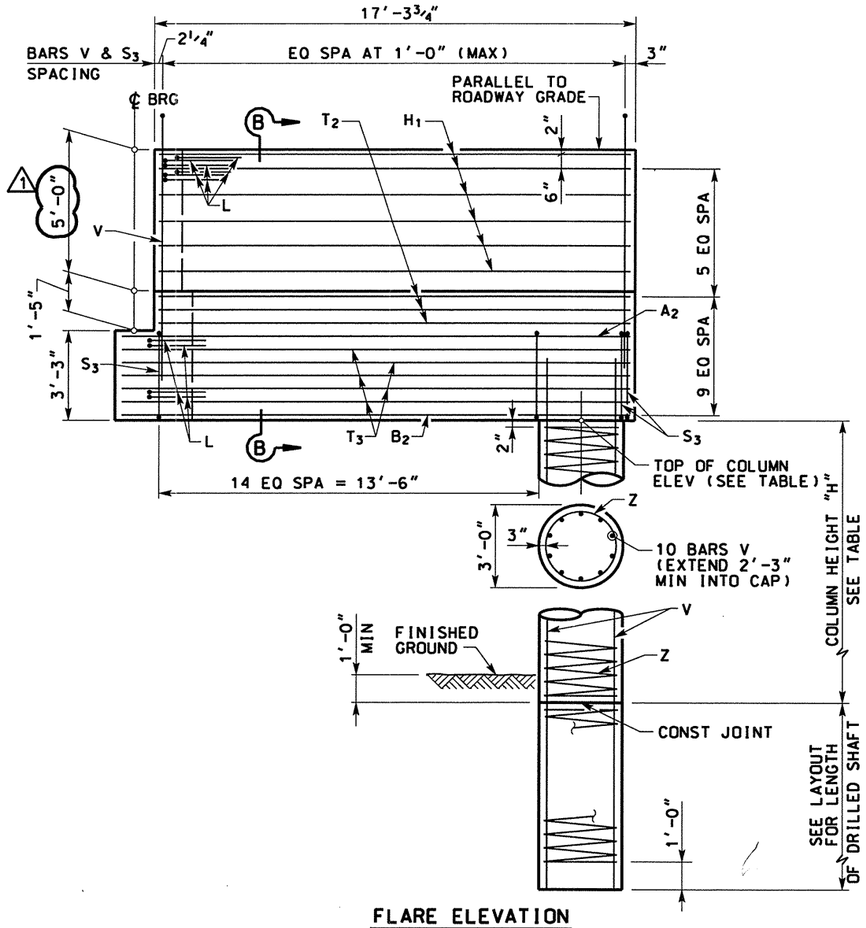

FLARE ELEVATION
SCALE: 3/16"=1'-0"

TABLE OF VARIABLE COLUMN QUANTITIES								ESTIMATED QUANTITIES PER COLUMN	
COLUMN	TOP OF COLUMN ELEVATION	"H"	TOP OF DS ELEVATION	BARS V 10 - #9		BARS Z #3 SPIRAL		REINF STEEL †	CLASS "C" CONC
				LENGTH	WEIGHT	LENGTH	WEIGHT		
		FT	FT	FT	LB	FT	LB	LB	CY
1	545.737	24	521.737	26'-3"	893	393'-6"	148	1041	6.3
2	545.245	24	521.245	26'-3"	893	393'-6"	148	1041	6.3
3	545.372	24	521.372	26'-3"	893	393'-6"	148	1041	6.3
4	545.499	24	521.499	26'-3"	893	393'-6"	148	1041	6.3
5	545.626	24	521.626	26'-3"	893	393'-6"	148	1041	6.3
6	545.753	24	521.753	26'-3"	893	393'-6"	148	1041	6.3
7	545.568	24	521.568	26'-3"	893	393'-6"	148	1041	6.3
8	545.437	24	521.437	26'-3"	893	393'-6"	148	1041	6.3
9	545.306	24	521.306	26'-3"	893	393'-6"	148	1041	6.3
10	545.723	24	521.723	26'-3"	893	393'-6"	148	1041	6.3

TABLE OF ESTIMATED QUANTITIES FOR BENT CAP				
BAR	NO	SIZE	LENGTH	WEIGHT
A_1	3	11	82'-11"	1322
A_2	3	11	18'-7"	296
B_1	3	11	81'-10"	1304
B_2	3	11	18'-7"	296
H_1	12	5	74'-5"*	931
H_2	12	5	17'-0"	213
L	20	6	4'-0"	120
S_1	80	5	12'-4"	1029
S_2	80	5	11'-11"	994
S_3	34	5	15'-2"	538
T_1	10	5	74'-5"	776
T_2	6	5	74'-5"	466
T_3	16	5	17'-0"	284
V_1	73	5	17'-4"	1320
V_2	19	5	14'-8"	291
† REINFORCING STEEL			LB	10180
CLASS "C" CONC (BENT)			CY	81.8
DRILLED SHAFT (36"Ø)			FT	160

† FOR CONTRACTOR'S INFORMATION ONLY
* INCLUDED 1'-6" LAP SPLICE

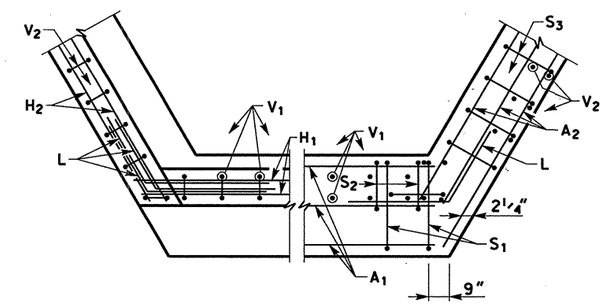

BACKWALL CAP

CORNER DETAILS

NOTES:

1. DESIGNED ACCORDING TO 1996 AASHTO STANDARD AND INTERIM SPECIFICATIONS.
2. CONCRETE STRENGTH fc' = 3,600 PSI.
3. ALL REINFORCING ~~SHALL BE~~ GRADE 60.
4. ALL DIMENSIONS TO THE REINFORCING STEEL ARE TO ℄ OF BAR UNLESS NOTED OTHERWISE.
5. ALL REINFORCING STEEL IN DRILLED SHAFTS INCLUDED IN PRICE BID FOR DRILLED SHAFTS.
6. FOR BEARING SEAT ELEVATIONS SEE "ESTIMATED QUANTITIES & BEARING SEAT ELEVATIONS" SHEET.
7. CALCULATED CAP DRILLED SHAFT LOAD=110 TONS/DRILLED SHAFT.

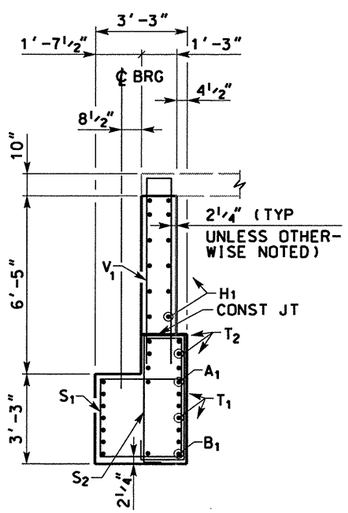

SECTION A-A
SCALE: 3/16"=1'-0"

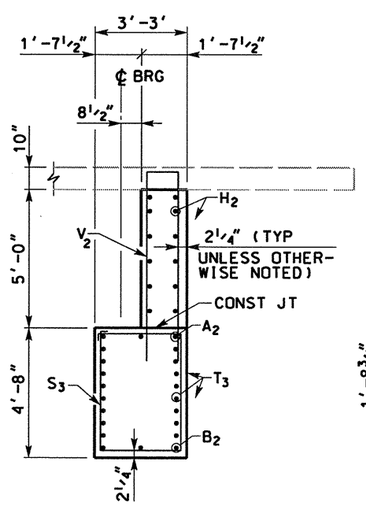

SECTION B-B
SCALE: 3/16"=1'-0"

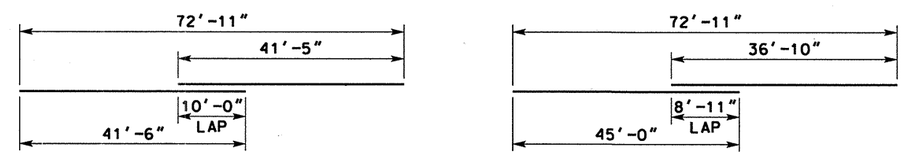

BARS A_1 BARS B_1

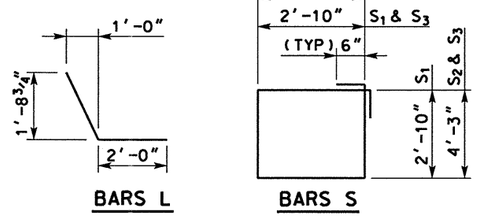

BARS L BARS S

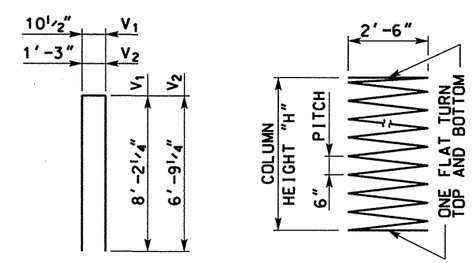

BARS V BARS Z

HS25 LOADING

STATE OF TEXAS RAYMOND C. BARKER 44988 REGISTERED PROFESSIONAL ENGINEER

THE SEAL APPEARING ON THIS DOCUMENT WAS AUTHORIZED BY RAYMOND C. BARKER PE 44988, ON OCTOBER 27, 2004

Raymond C. Barker

10/27/2004

KBR
Engineered by KBR Technical Services, Inc

©2004 Texas Department of Transportation

IH 35
LOOP 20 TO UNIROYAL ROAD
TRES EQUIS BLVD
BENT 2

SHEET 2 OF 2

FED RD DIV NO	FEDERAL AID PROJECT NO		SHEET NO
6	NH-2002 (79)		653
STATE	STATE DIST		COUNTY
TEXAS	LAREDO		WEBB
CONT	SECT	JOB	HIGHWAY NO
0018	05	062, ETC	IH 35

DATE	BY	REV	REVISION
10/27/04	EG	1	REV BKWL HT

REF FILE(S): J01LOP01.BDR. BDR LV ON = 48.57.58.60-62

b70bdp12.dgn-11 HOUFILE023 \HCIVIL\CF0130\

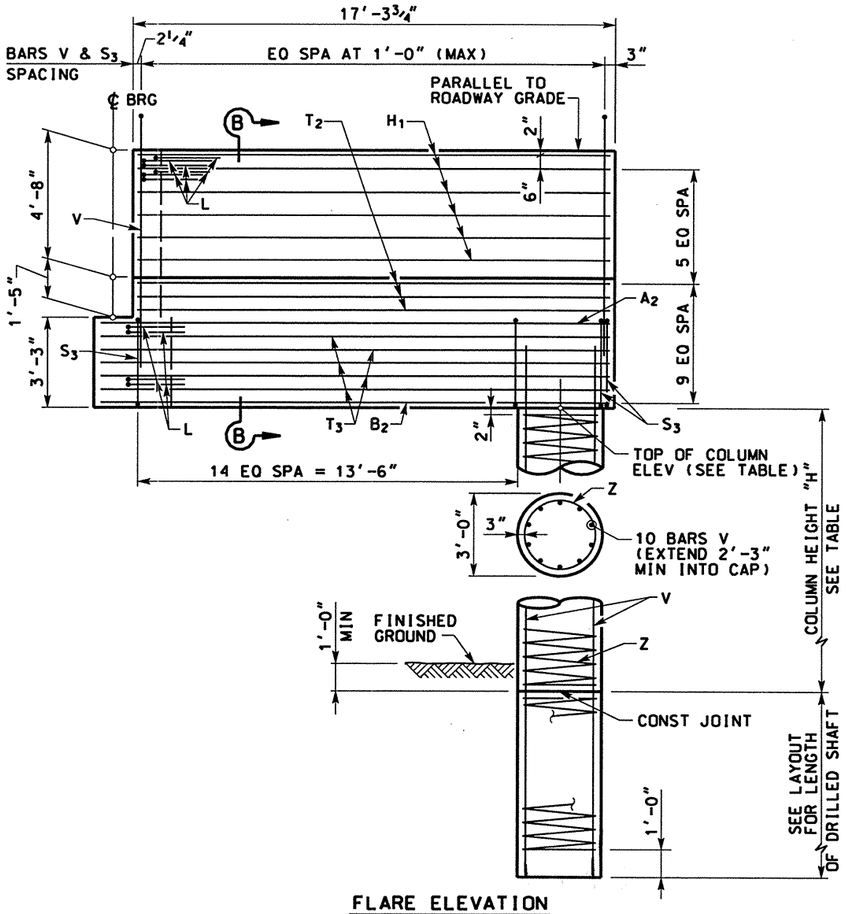

FLARE ELEVATION
SCALE: 3/16"=1'-0"

TABLE OF VARIABLE COLUMN QUANTITIES								ESTIMATED QUANTITIES PER COLUMN	
COLUMN	TOP OF COLUMN ELEVATION	"H"	TOP OF DS ELEVATION	BARS V 10 - #9		BARS Z #3 SPIRAL		REINF STEEL †	CLASS "C" CONC
				LENGTH	WEIGHT	LENGTH	WEIGHT		
		FT	FT	FT	LB	FT	LB	LB	CY
1	545.737	24	521.737	26'-3"	893	393'-6"	148	1041	6.3
2	545.245	24	521.245	26'-3"	893	393'-6"	148	1041	6.3
3	545.372	24	521.372	26'-3"	893	393'-6"	148	1041	6.3
4	545.499	24	521.499	26'-3"	893	393'-6"	148	1041	6.3
5	545.626	24	521.626	26'-3"	893	393'-6"	148	1041	6.3
6	545.753	24	521.753	26'-3"	893	393'-6"	148	1041	6.3
7	545.568	24	521.568	26'-3"	893	393'-6"	148	1041	6.3
8	545.437	24	521.437	26'-3"	893	393'-6"	148	1041	6.3
9	545.306	24	521.306	26'-3"	893	393'-6"	148	1041	6.3
10	545.723	24	521.723	26'-3"	893	393'-6"	148	1041	6.3

TABLE OF ESTIMATED QUANTITIES FOR BENT CAP				
BAR	NO	SIZE	LENGTH	WEIGHT
A_1	3	11	82'-11"	1322
A_2	3	11	18'-7"	296
B_1	3	11	81'-10"	1304
B_2	3	11	18'-7"	296
H_1	12	5	74'-5"*	931
H_2	12	5	17'-0"	213
L	20	6	4'-0"	120
S_1	80	5	12'-4"	1029
S_2	80	5	11'-11"	994
S_3	34	5	15'-2"	538
T_1	10	5	74'-5"	776
T_2	6	5	74'-5"	466
T_3	16	5	17'-0"	284
V_1	73	5	17'-4"	1320
V_2	19	5	14'-8"	291
† REINFORCING STEEL			LB	10180
CLASS "C" CONC (BENT)			CY	81.8
DRILLED SHAFT (36"Ø)			FT	160

† FOR CONTRACTOR'S INFORMATION ONLY
* INCLUDED 1'-6" LAP SPLICE

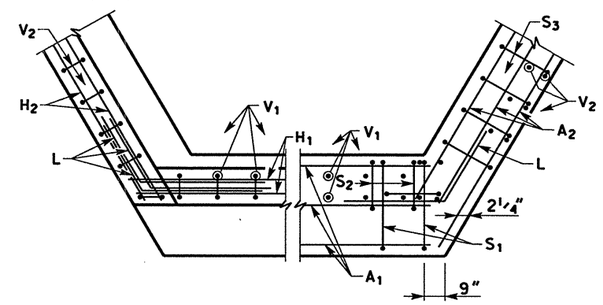

BACKWALL CAP

CORNER DETAILS

NOTES:

1. DESIGNED ACCORDING TO 1996 AASHTO STANDARD AND INTERIM SPECIFICATIONS.
2. CONCRETE STRENGTH fc' = 3,600 PSI.
3. ALL REINFORCING ~~SHALL BE~~ GRADE 60.
4. ALL DIMENSIONS TO THE REINFORCING STEEL ARE TO ℄ OF BAR UNLESS NOTED OTHERWISE.
5. ALL REINFORCING STEEL IN DRILLED SHAFTS INCLUDED IN PRICE BID FOR DRILLED SHAFTS.
6. FOR BEARING SEAT ELEVATIONS SEE "ESTIMATED QUANTITIES & BEARING SEAT ELEVATIONS" SHEET.
7. CALCULATED CAP DRILLED SHAFT LOAD=110 TONS/DRILLED SHAFT.

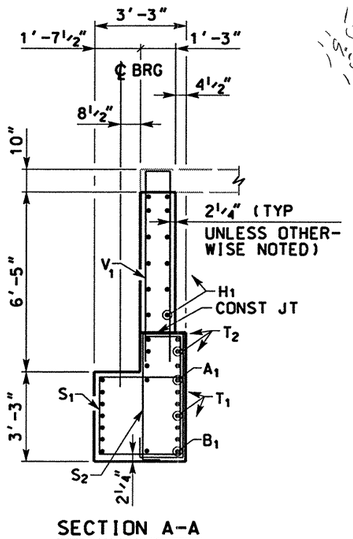

SECTION A-A
SCALE: 3/16"=1'-0"

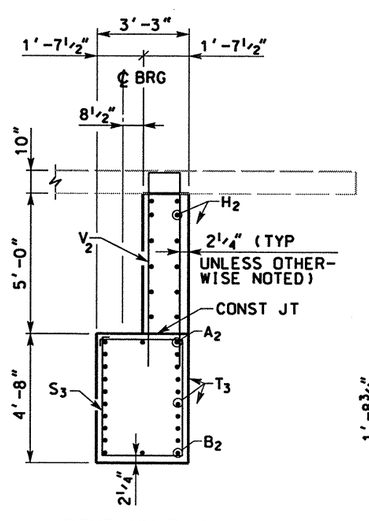

SECTION B-B
SCALE: 3/16"=1'-0"

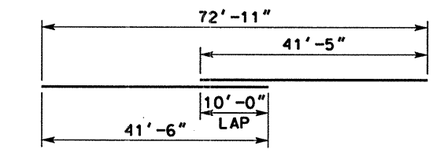

BARS A_1

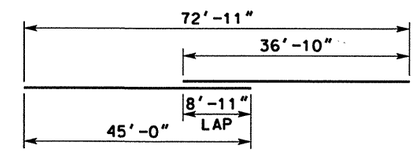

BARS B_1

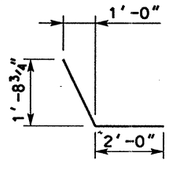

BARS L

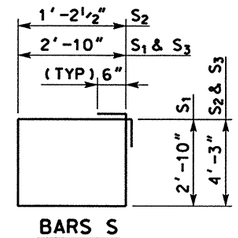

BARS S

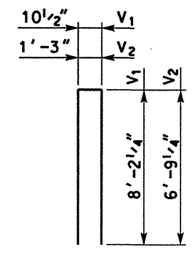

BARS V

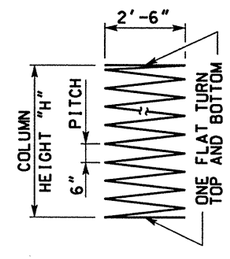

BARS Z

HS25 LOADING

STATE OF TEXAS
JAMES B. HORNSBY
No. 81485
REGISTERED PROFESSIONAL ENGINEER

THE SEAL APPEARING ON THIS DOCUMENT WAS AUTHORIZED BY JAMES B. HORNSBY PE 81485, ON JUNE 02, 2003

KBR
Engineered by KBR Technical Services, Inc

©2003 Texas Department of Transportation

IH 35
LOOP 20 TO UNIROYAL ROAD
TRES EQUIS BLVD
BENT 2

SHEET 2 OF 2

FED RD DIV NO	FEDERAL AID PROJECT NO		SHEET NO
6	NH-2002 (79)		653
STATE	STATE DIST		COUNTY
TEXAS	LAREDO		WEBB
CONT	SECT	JOB	HIGHWAY NO
0018	05	062, ETC	IH 35

REF FILE(S): J01LOP01.BDR. BDR LV ON = 48.57.58.60-62

6/4/2003 HOUFILE023 \HCIVIL\CF0130\ b70bdp12.dgn-10

◊ THEORETICAL DIMENSION

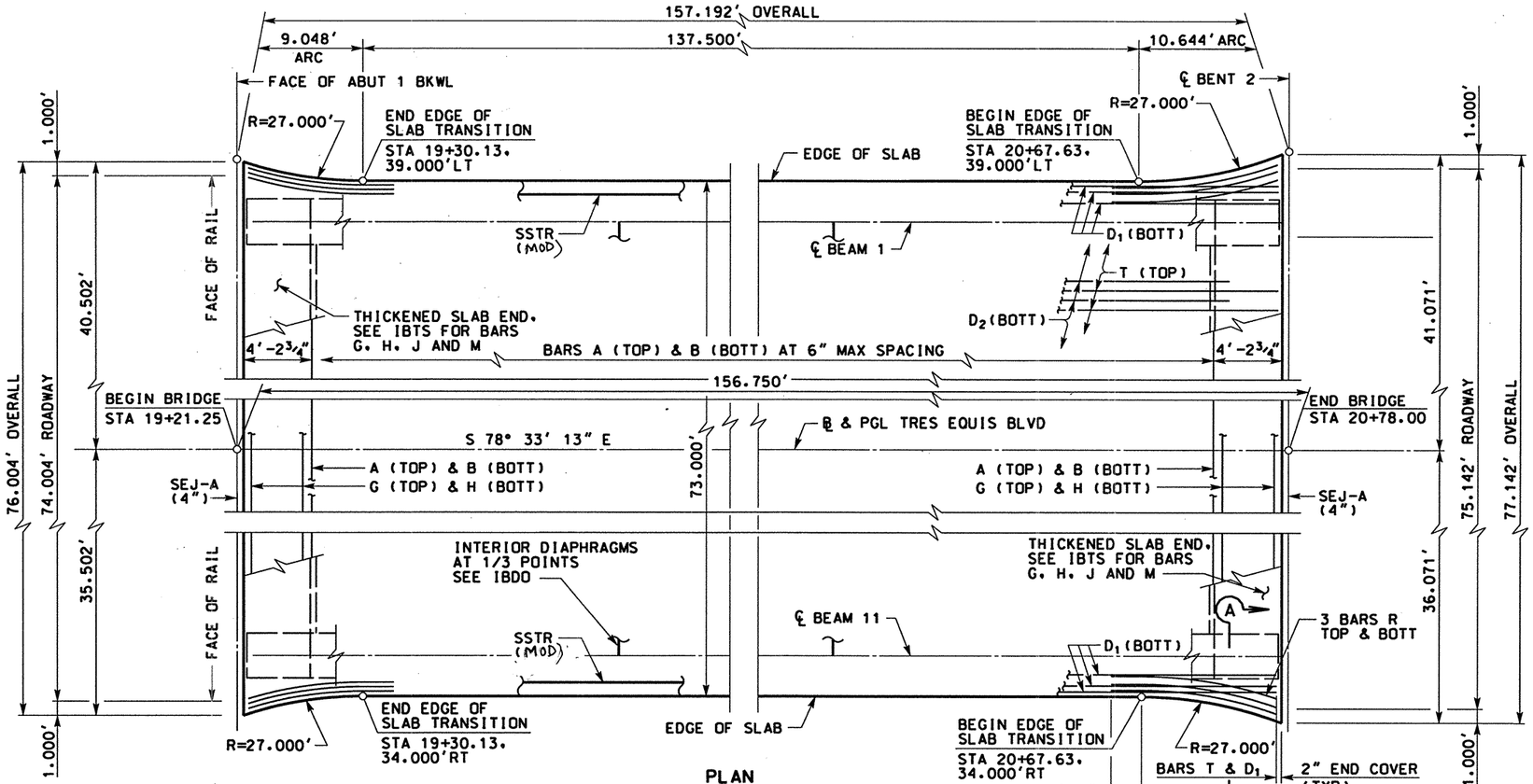

PLAN

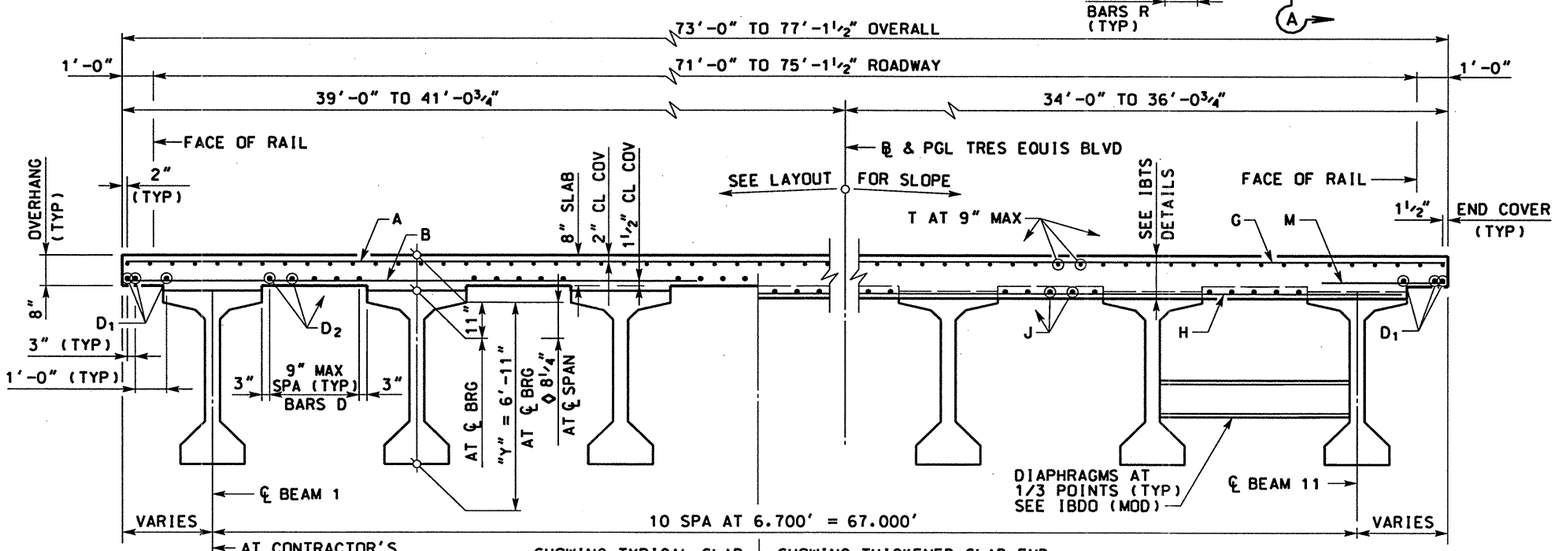

TYPICAL TRANSVERSE SECTION
SCALE: 1"= 5'

HS25 LOADING

0 5 10
SCALE: 1" = 10'

STATE OF TEXAS
JAMES B. HORNSBY
81485
REGISTERED PROFESSIONAL ENGINEER

THE SEAL APPEARING ON THIS DOCUMENT WAS AUTHORIZED BY JAMES B. HORNSBY PE 81485, ON JUNE 02, 2003

KBR
Engineered by KBR Technical Services, Inc

©2003 Texas Department of Transportation

IH 35
LOOP 20 TO UNIROYAL ROAD
TRES EQUIS BLVD
156.00' PRESTRESSED CONC BEAM UNIT

SHEET 1 OF 2

FED RD DIV NO	FEDERAL AID PROJECT NO	SHEET NO
6	NH-2002 (79)	654
STATE	STATE DIST	COUNTY
TEXAS	LAREDO	WEBB
CONT	SECT	JOB	HIGHWAY NO
0018	05	062, ETC	IH 35

REF FILE(S): J01LOP01.BDR, BDR LV ON = 14.48.57.58.60-62

6/4/2003 HOUFILE023 \hcivil\cf0130\ 70sip05.dgn-11

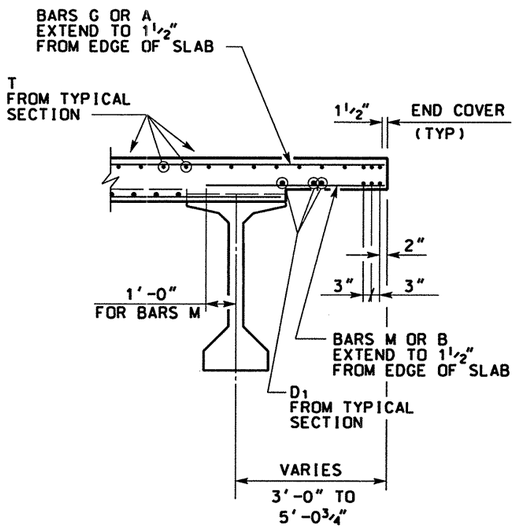

SECTION A-A

BAR TABLE	
BAR	SIZE
A	#5
B	#5
D	#5
G	#5
H	#5
J	#5
M	#5
R	#5
T	#4

TABLE OF ESTIMATED QUANTITIES			
REINF CONCRETE SLAB	PRESTRESSED CONCRETE BEAMS (TY VI (MOD))	CLASS "S" CONCRETE †	TOTAL REINF STEEL * †
SF	LF	CY	LB
11.466	1.719.11	312.0	74.529

* REINFORCING STEEL WEIGHT IS CALCULATED USING AN APPROXIMATE FACTOR OF 6.5 LBS/SF.

† FOR CONTRACTOR'S INFORMATION ONLY.

BEAM REPORT				
SPAN	BEAMS	HORIZONTAL DISTANCE		TRUE DISTANCE BOT BM FLG **
		C-C BENT	C-C BRG	
1	ALL	156.250	154.833	156.28

** BEAM LENGTH SHOWN IS BOTTOM BEAM FLANGE LENGTH WITH ADJUSTMENT MADE FOR BEAM SLOPE

NOTES:

1. DESIGNED ACCORDING TO CURRENT AASHTO STANDARD AND INTERIM SPECIFICATIONS.
2. SEE IBTS STANDARD FOR THICKENED SLAB END DETAILS AND QUANTITY ADJUSTMENTS.
3. SEE PCP(C) OR PMDF(C) STANDARDS FOR DETAILS AND QUANTITY ADJUSTMENTS IF EITHER OF THESE OPTIONS ARE USED.
4. ALL REINFORCING ~~SHALL BE~~ GRADE 60.
5. CONCRETE STRENGTH F'c = 4.000 PSI.
6. BAR LAPS. WHERE REQUIRED. ~~SHALL BE~~ AS FOLLOWS:

UNCOATED	- #4	= 1'-5"
	- #5	= 1'-9"
EPOXY COATED	- #4	= 2'-1"
	- #5	= 2'-7"

"A"	"B"
FT	FT
0.156	0.218

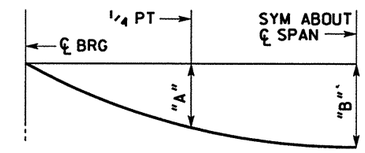

DEAD LOAD
DEFLECTION DIAGRAM

NOTE: DEFLECTIONS SHOWN ARE DUE TO CONCRETE SLAB ONLY. ($E_C = 5 \times 10^6$ PSI) CALCULATED DEFLECTIONS SHOWN ARE THEORETICAL AND ACTUAL DIMENSIONS MAY BE LESS. DEFLECTIONS SHALL BE ADJUSTED BASED ON FIELD OBSERVATIONS.

HS25 LOADING

0 5 10
SCALE: 1" = 10'

STATE OF TEXAS
JAMES B. HORNSBY
81485
REGISTERED PROFESSIONAL ENGINEER

THE SEAL APPEARING ON THIS DOCUMENT WAS AUTHORIZED BY JAMES B. HORNSBY PE 81485, ON JUNE 02, 2003

KBR
Engineered by KBR Technical Services, Inc

©2003 Texas Department of Transportation

IH 35
LOOP 20 TO UNIROYAL ROAD
TRES EQUIS BLVD
156.00' PRESTRESSED CONC
BEAM UNIT

SHEET 2 OF 2

FED RD DIV NO	FEDERAL AID PROJECT NO		SHEET NO
6	NH-2002 (79)		655
STATE	STATE DIST		COUNTY
TEXAS	LAREDO		WEBB
CONT	SECT	JOB	HIGHWAY NO
0018	05	062. ETC	IH 35

REF FILE(S): J01LOP01.BDR. BDR LV ON = 14:48:57.58.60-62
HOUFILE023 \hcivil\cf0130\ 6/4/2003
b70slp09.dgn-05

DESIGNED BEAMS (DEPRESSED STRANDS)

STRUCTURE	SPAN NO	BEAM NO	BEAM TYPE	NON-STD STRAND PATTERN	PRESTRESSING STRANDS TOTAL NO	TOTAL SIZE (in)	TOTAL STRGTH f's (ksi)	TOTAL "e" ℄ (in)	TOTAL "e" END (in)	DEPRESSED NO	DEPRESSED TO (in)	CONCRETE RELEASE STRGTH f'ci (psi)	CONCRETE MINIMUM 28 DAY COMP STRGTH f'c (psi)
TRES EQUIS BLVD	1	ALL	VIM		84	0.5	270	25.37	10.79	34	70	6447	8645

OPTIONAL DESIGN

DESIGN LOAD COMP STRESS (TOP ℄) fct(psi)	DESIGN LOAD TENSILE STRESS (BOTT ℄) fcb(psi)	REQUIRED MINIMUM ULTIMATE MOMENT CAPACITY (ft-kips)
3976	-5034	13039

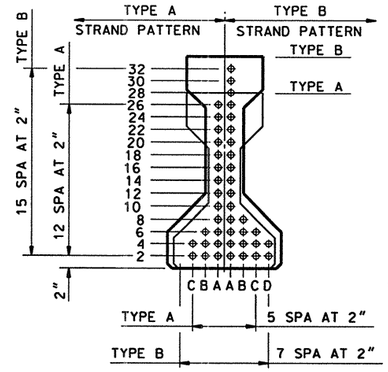

TYPE A & TYPE B BMS

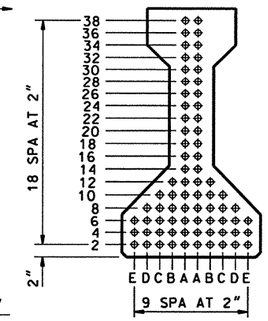

TYPE C BM

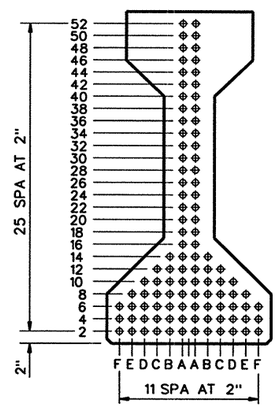

TYPE IV BM
(AASHTO TYPE IV BM)

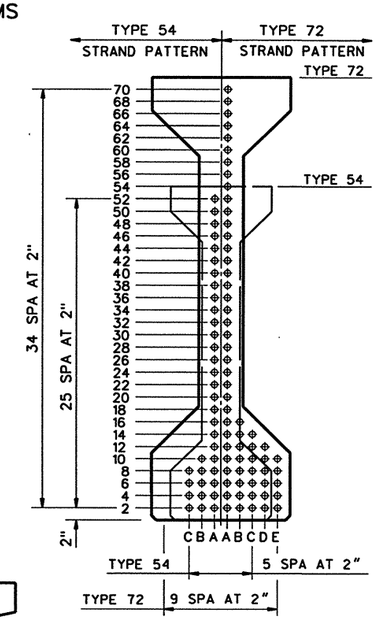

TYPE 54 & TYPE 72 BMS

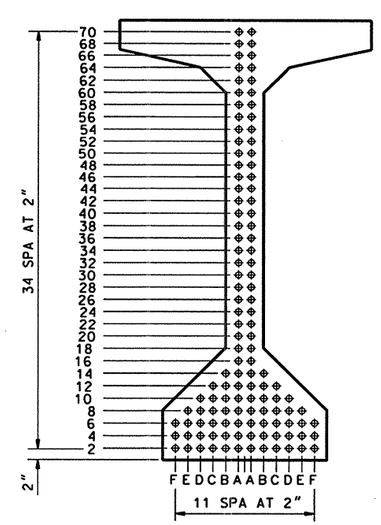

TYPE VIM BM
(AASHTO TYPE VI(MOD) BM)

NON-STANDARD STRAND PATTERNS

PATTERN	STRAND ARRANGEMENT AT ℄ OF BEAM

GENERAL NOTES:

DESIGNED IN ACCORDANCE WITH CURRENT AASHTO STANDARD SPECIFICATIONS.

ALL CONCRETE ~~SHALL BE~~ CLASS H. ALL REINFORCING BARS SHALL BE GRADE 60.

WHEN SHOWN ON THIS SHEET, THE FABRICATOR HAS THE OPTION OF FURNISHING EITHER THE DESIGNED DEPRESSED STRAND BEAM OR AN APPROVED OPTIONAL DESIGN. ALL OPTIONAL DESIGN SUBMITTALS AND SHOP DRAWINGS ~~SHALL BE~~ SIGNED, SEALED AND DATED BY A REGISTERED PROFESSIONAL ENGINEER.

OPTIONAL DESIGNS FOR BEAMS 120 FEET OR LONGER ~~SHALL~~ HAVE A CALCULATED RESIDUAL CAMBER EQUAL TO OR GREATER THAN THAT OF THE DESIGNED BEAM.

PRESTRESS LOSSES FOR THE DESIGNED BEAMS HAVE BEEN CALCULATED FOR A RELATIVE HUMIDITY OF 65 PERCENT. OPTIONAL DESIGNS ~~SHALL~~ LIKEWISE CONFORM.

CERTAIN BEAMS WITH DEPRESSED STRANDS ARE SUBJECT TO CRACKING IN THE END OF THE BEAM. WHEN SUCH CRACKS OCCUR, ALL SUBSEQUENT BEAMS OF THE SAME TYPE AND STRAND PATTERN ~~SHALL~~ HAVE STRANDS DEBONDED IN THE FOLLOWING MANNER:

1. ALTERNATE ROWS OF DEPRESSED STRANDS ~~SHALL BE~~ DEBONDED FOR TWO FEET FROM EACH END OF THE BEAM.
2. ONE HALF OF THE STRAIGHT STRANDS, AS NEARLY AS POSSIBLE, ~~SHALL BE~~ DEBONDED FOR FOUR FEET FROM EACH END OF THE BEAM.
3. THE DEBONDING PATTERN ~~SHALL BE~~ SYMMETRICAL ABOUT THE VERTICAL AXIS OF THE BEAM FOR BOTH DEPRESSED AND STRAIGHT STRANDS.
4. STRANDS ~~SHALL BE~~ DEBONDED SO THAT THE CENTERS OF GRAVITY OF THE DEPRESSED STRANDS AND THE STRAIGHT STRANDS WILL REMAIN WITHIN ONE INCH OF THEIR ORIGINAL LOCATION.
5. STRANDS ~~SHALL BE~~ ENCASED IN PLASTIC TUBING ALONG ENTIRE DEBONDED LENGTH, AND ENDS OF TUBING SHALL BE SEALED WITH WATERPROOF TAPE. SPLIT PLASTIC TUBING MAY BE USED PROVIDED THE SEAM OF THE TUBING IS SUFFICIENTLY SEALED WITH WATERPROOF TAPE TO PROHIBIT GROUT INFILTRATION. WRAPPING OF STRANDS WITH TAPE TO PROVIDE DEBONDING WILL NOT BE PERMITTED.
6. REVISED SHOP DRAWINGS WILL NOT BE REQUIRED.

FOR DEPRESSED STRAND DESIGNED BEAMS, STRANDS SHALL BE LOCATED AS LOW AS POSSIBLE ON THE 2" GRID SYSTEM UNLESS A NON-STANDARD STRAND PATTERN IS INDICATED. FILL ROW "2", THEN ROW "4", THEN ROW "6", ETC., BEGINNING EACH ROW IN THE "A" POSITION AND WORKING OUTWARD UNTIL THE REQUIRED NUMBER OF STRANDS IS REACHED. ALL STRANDS IN THE "A" POSITION ~~SHALL BE~~ DEPRESSED, MAINTAINING THE 2" SPACING SO THAT, AT THE BEAM ENDS, THE UPPER TWO STRANDS ARE IN THE POSITION SHOWN IN THE TABLE.

STRANDS FOR THE DESIGNED BEAM ~~SHALL BE~~ 1/2" 270 ksi LOW RELAXATION STRANDS PRETENSIONED TO 31.0 k EACH.

THE SEAL APPEARING ON THIS DOCUMENT WAS AUTHORIZED BY JAMES B. HORNSBY P.E. 81485, ON APRIL 18, 2003

STATE OF TEXAS · JAMES B. HORNSBY · 81485 · REGISTERED PROFESSIONAL ENGINEER

HS25 LOADING — SHEET 1 OF 1

KBR
Engineered by KBR Technical Services, Inc

©2003 Texas Department of Transportation

PRESTRESSED CONCRETE BEAMS (NON-STANDARD SPANS)

IBNS

FILE: ~~bstd006.dgn~~	DN: SRT	CK: JBH	DW: JAM	CK: SRT
ORIG DATE:	DIST	FED REG	FEDERAL AID PROJECT	SHEET
REVISIONS	22	6	NH-2002 (79)	656
	COUNTY	CONTROL	SECT	JOB	HIGHWAY
	WEBB	0018	05	062, ETC	IH 35

4/21/2003 HOUFILE023 \HCIVIL\CF0130\ b70bdp13.DGN-04

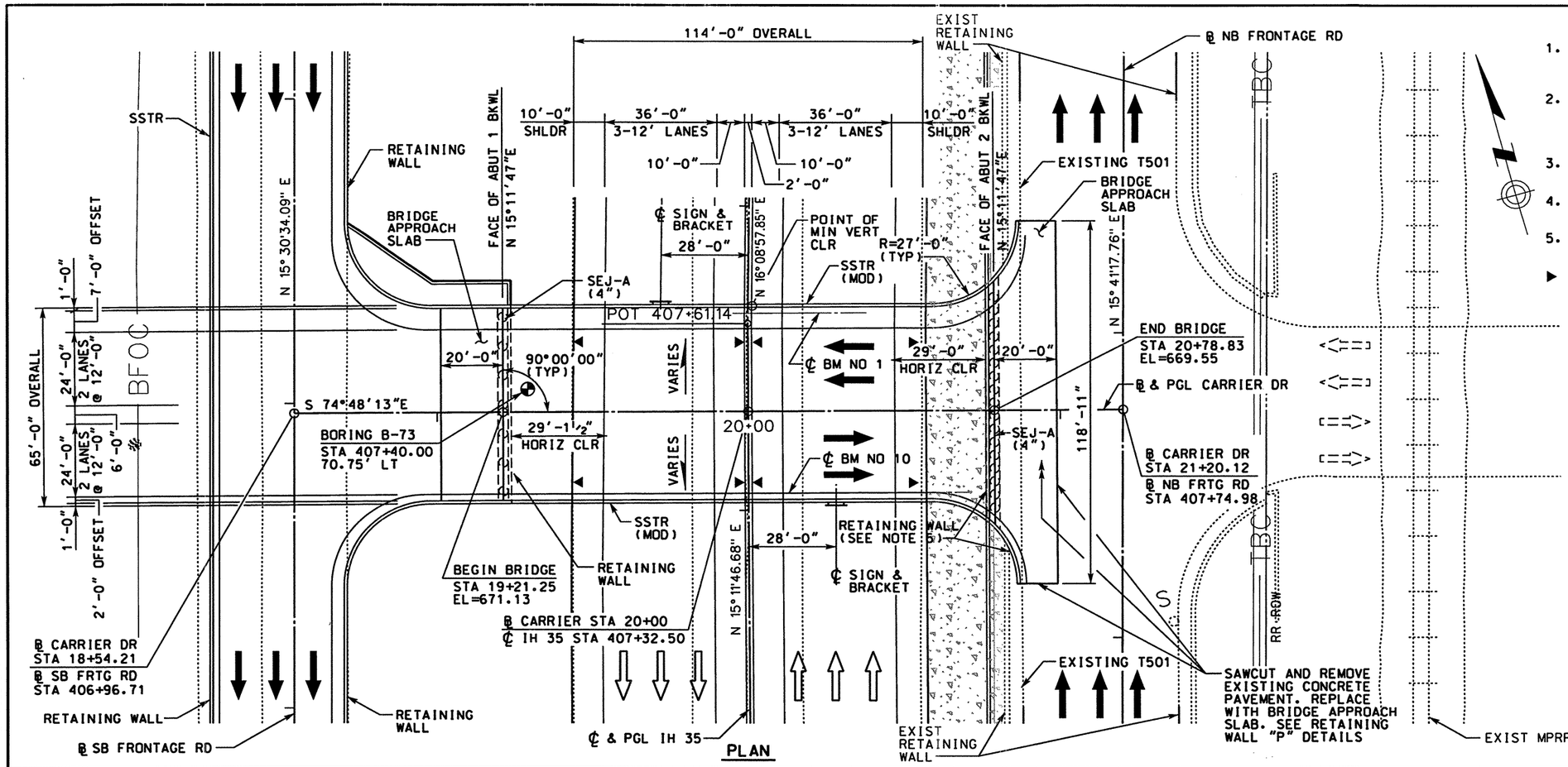

PLAN

GENERAL NOTES:

1. DESIGNED ACCORDING TO 1996 AASHTO STANDARD SPECIFICATION AND INTERIMS THERETO (HS25 LOADING).
2. BEAM END CONDITIONS:
   D: DENOTES A SLOTTED HOLE AT EXTERIOR BEAM END.
   BLANK: DENOTES NO HOLE AT BEAM END.
3. FOR BORING LOGS. SEE "BORING LOGS" SHEETS.
4. DRILLED SHAFTS ARE DESIGNED WITH POINT BEARING AND SKIN FRICTION.
5. 36" Φ DRILLED SHAFTS AT ABUTMENT 2 ARE PAID FOR AS PART OF RETAINING WALL "P".

▶ UNDERPASS BRIDGE LIGHTING

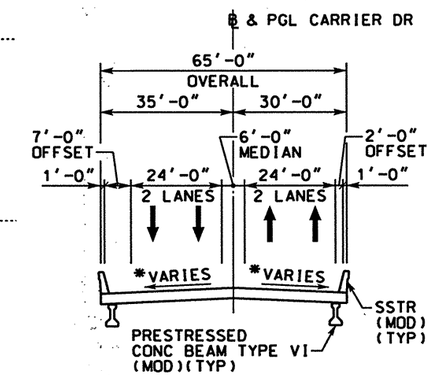

TYPICAL SUPER-STRUCTURE SECTION

NTS

*VARIES SEE CARRIER DRIVE CONTOUR GRADING PLAN

DESIGN SPEED: 35 MPH
ADT: 4850(2003)8400(2023)
RFC: URBAN LOCAL STREET
NBI: 22-240-0-0018-05-175

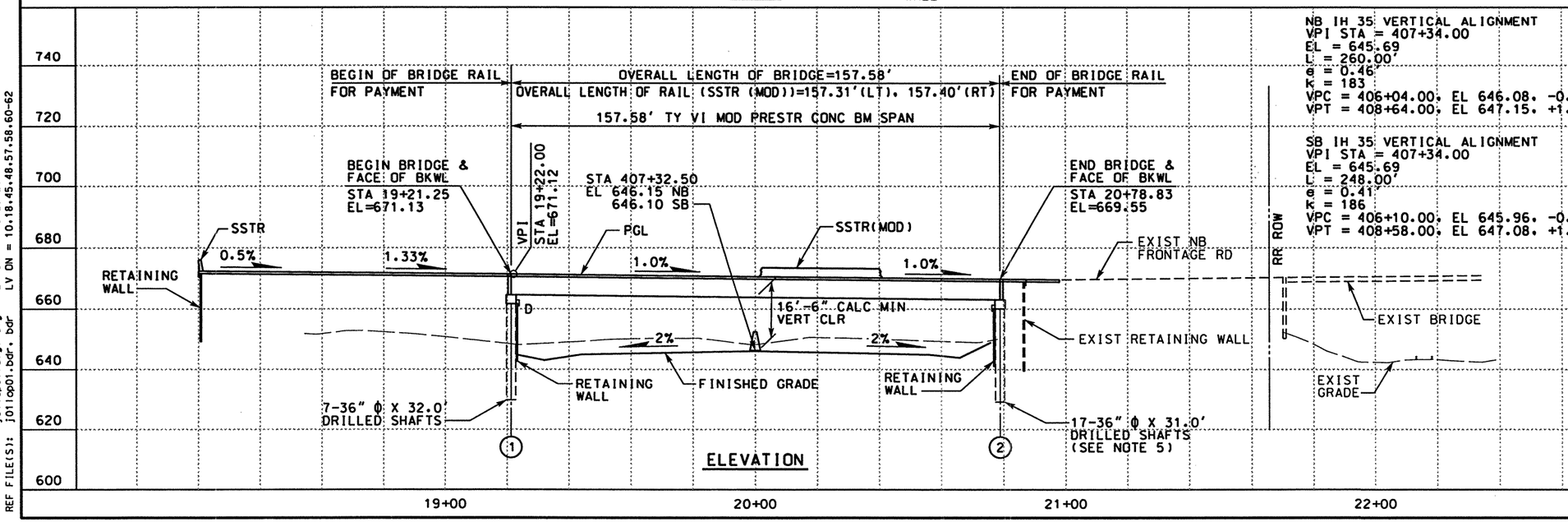

ELEVATION

NB IH 35 VERTICAL ALIGNMENT
VPI STA = 407+34.00
EL = 645.69
L = 260.00'
e = 0.46
K = 183
VPC = 406+04.00, EL 646.08, -0.3000%
VPT = 408+64.00, EL 647.15, +1.1197%

SB IH 35 VERTICAL ALIGNMENT
VPI STA = 407+34.00
EL = 645.69
L = 248.00'
e = 0.41
K = 186
VPC = 406+10.00, EL 645.96, -0.2147%
VPT = 408+58.00, EL 647.08, +1.1197%

0 20 40
SCALE: 1" = 40'

STATE OF TEXAS
JAMES B. HORNSBY
81485
REGISTERED PROFESSIONAL ENGINEER

THE SEAL APPEARING ON THIS DOCUMENT WAS AUTHORIZED BY JAMES B. HORNSBY PE 81485, ON JUNE 09, 2003

KBR
Engineered by KBR Technical Services, Inc

6/9/2003

©2003 Texas Department of Transportation

IH 35
LOOP 20 TO UNIROYAL ROAD
CARRIER DRIVE UNDERPASS
BRIDGE LAYOUT

SHEET 1 OF 1

FED RD DIV NO	FEDERAL AID PROJECT NO	SHEET NO
6	NH-2002 (79)	657
STATE	STATE DIST	COUNTY
TEXAS	LAREDO	WEBB

CONT	SECT	JOB	HIGHWAY NO
0018	05	062, ETC	IH 35

REF FILE(S): j01lop01.bnt, bnt LV ON = 1-63 LV ON = 1-22.25-63
j01lop01.row, milointi.row

REF FILE(S): j01lop01.utl, utl LV ON = 1-63 LV ON = 1-17.19-63 LV ON = 2.9.10.14.17.20.21.25.28.31 LV ON = 1-6.25-29 LV ON = 10.18.45.48.57.58.60-62
j01lop01.eop, eop
j01lop01.bck, bck
j01lop01.alg, alg
j01lop01.bdr, bdr

b70ppp06.dgn-16 HOUFILE023 \hcivil\cf0130\

SUMMARY OF BRIDGE QUANTITIES

DESCRIPTION	416-0535 DRILLED SHAFTS (36 IN) * *	420-0513 CL C CONC (ABUTMENT)	422-0505 REINF CONC SLAB * (CL S)	425-0522 PRESTR CONC BEAM (TY VI(MOD))	428-0501 CONC SURF TREAT	440-XXXX REINF STEEL *	444-0505 SIGN & BRACKET	450-0746 RAIL SSTR (MOD)	454-0503 SEALED EXP JOINT (4 IN)	CONC STAIN FINISH *
	LF	CY	SF	LF	SY	LB	EA	LF	LF	SY
2-ABUTMENTS	224	102.7				14221				
1-PRESTR CONC BM UNIT			10347	1570.90	1102	67256	2	314.7	143	106
TOTALS	224	102.7	10347	1570.90	1102	81477	2	314.7	143	106

* FOR CONTRACTORS INFORMATION ONLY

* * 36" ϕ DRILLED SHAFTS AT ABUTMENT 2 ARE PAID FOR AS PART OF RETAINING WALL "P"

BEARING SEAT ELEVATIONS

	BEAM 1	BEAM 2	BEAM 3	BEAM 4	BEAM 5	BEAM 6	BEAM 7	BEAM 8	BEAM 9	BEAM 10
BENT 1 (FWD)	663.355	663.486	663.617	663.748	663.880	663.980	663.848	663.717	663.586	663.455
BENT 2 (BK)	662.257	662.294	662.330	662.366	662.402	662.425	662.354	662.283	662.213	662.142

STATE OF TEXAS
JAMES B. HORNSBY
81485
REGISTERED PROFESSIONAL ENGINEER

THE SEAL APPEARING ON THIS DOCUMENT WAS AUTHORIZED BY JAMES B. HORNSBY PE 81485, ON JUNE 09, 2003

KBR
Engineered by KBR Technical Services, Inc

©2003 Texas Department of Transportation

IH 35
LOOP 20 TO UNIROYAL ROAD
CARRIER BLVD UNDERPASS
QUANTITY SUMMARY/
BEARING SEAT ELEVATIONS

SHEET 1 OF 1

FED RD DIV NO	FEDERAL AID PROJECT NO		SHEET NO
6	NH-2002 (79)		658
STATE	STATE DIST		COUNTY
TEXAS	LAREDO		WEBB
CONT	SECT	JOB	HIGHWAY NO
0018	05	062, ETC	IH 35

REF FILE(S): j011cp01.bdr, bdr LV ON = 47,57,58,60-62

b36qsp17.dgn-13 HOUFILE023 \hcivil\cf0130\ 6/9/2003

PROJECT: IH-35 AT CARRIER DR., LAREDO, TEXAS. BORING B-73

DATE 5/22 & 6/13/02 TYPE 4" Flight Auger LOCATION Stg 407+40: 75' L. of SB frtg. rd.

SHEAR STRENGTH, TSF: ○ POCKET PENETROMETER △ CONFINED COMPRESSION ● UNCONFINED COMPRESSION □ TORVANE (0.5 1 1.5 2)

DEPTH IN FEET	DESCRIPTION (Elevation: Ap. 649)	THD 1st 6"	THD 2nd 6"	M.C. %	U.D.W. PCF	-200 MESH	LIQUID LIMIT	PLASTIC LIMIT	PLASTICITY INDEX
0	Very hard, tan, tan & light gray, Sandy Lean Clay (CL), with ferrous & calcareous nodules, reactive with hydrochloric acid (HCL),	37	45	4		84	37	17	20
				6		46	39	19	20
				8		93	33	16	17
		50/3"	50/2"	6					
				6		96			
				5		97	29	15	14
				5					
12		50/2"	50/1"						
	possible weathered limestone -w/calcareous nodules pockets @ 1.5'-3'	50/1"	50/1"	9		98	42	19	23
	Very hard, tan & light gray, Silty Lean Clay (CL), with calcareou nodules, reactive with HCL	50/1"	50/1"	10					
24		50/1"	50/1"	10		94	47	20	27
	-very hard cemented sandstone layer @ 27'-28.5'	50/1"	50/1"	9		97	47	20	27
	-w/sandstone lenses below 27'			17		81	70	27	43
	Very hard, tan & light gray, Sandy Fat Clay (CH), with sandstone fragments	40	50/ .75"	14					
36				17		72	53	23	30
				15		66	43	20	23
	Very hard, tan & light gray, Sandy Lean Clay (CL), with sandstone fragments	50/ .75"	50/ 0.5"	16		59	40	18	22
		50/2"	50/ 0.5"	12					
				14					
	Very hard, gray, Shale			9		60	37	18	19
48		50/0"	50/0"	16					
				14					
		50/ 0.5"	50/0"	15					
				15		84	51	20	31
		50/ .25"	50/0"						
60				13					
		50/0"	50/0"						
				17		80	56	23	33
		50/0"	50/0"						
72	Bottom of hole @ 70'								
84									

BORING DRILLED TO 70 FEET ( ) METER WITHOUT DRILLING FLUID

WATER ENCOUNTERED AT - FEET (METER) WHILE DRILLING

WATER LEVEL AT - FEET (METER) AFTER 3 HOURS

DRILLED BY JH CHECKED BY PST LOGGED BY JH

STATE OF TEXAS JAMES B. HORNSBY 81485 REGISTERED PROFESSIONAL ENGINEER

THE SEAL APPEARING ON THIS DOCUMENT WAS AUTHORIZED BY JAMES B. HORNSBY PE 81485, ON APRIL 18, 2003

KBR

Engineered by KBR Technical Services, Inc

©2003 Texas Department of Transportation

IH 35
LOOP 20 TO UNIROYAL ROAD
CARRIER DRIVE UNDERPASS
SOIL BORINGS

SHEET 1 OF 1

FED RD DIV NO	FEDERAL AID PROJECT NO		SHEET NO
6	NH-2002 (79)		659
STATE	STATE DIST		COUNTY
TEXAS	LAREDO		WEBB
CONT	SECT	JOB	HIGHWAY NO
0018	05	062, ETC	IH 35

4/18/2003

b70bjp05.dgn-01 HOUFILE023 \hcivil\cf0130\

REF FILE(S): j011op01.bdr, bdr LV ON = 5:45:57,60-63

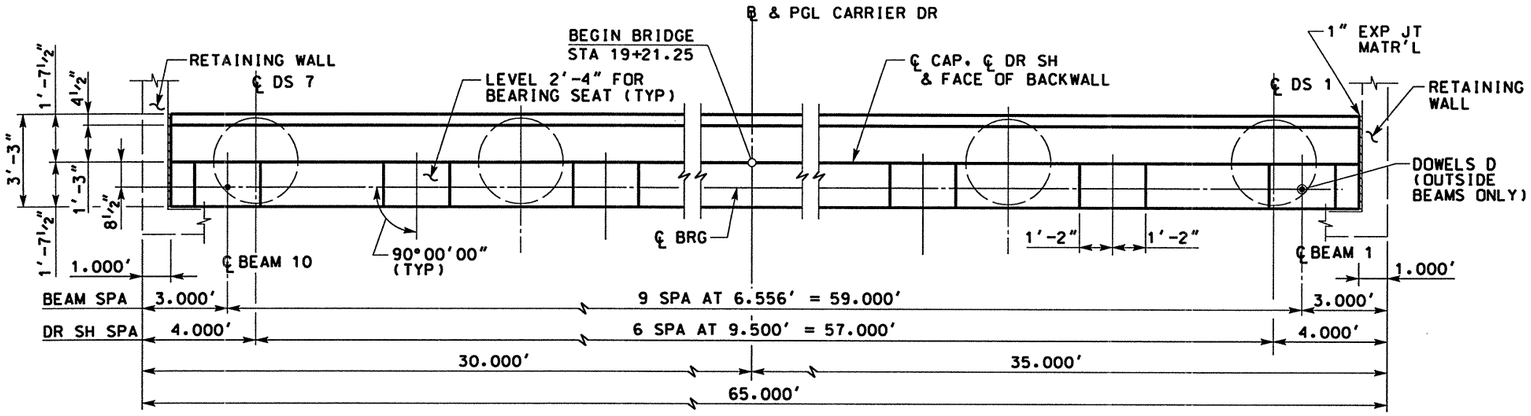

PLAN

SCALE: 3/16"= 1'-0"

DS	TOP OF DS ELEV
1	660.000
2	660.190
3	660.380
4	660.570
5	660.480
6	660.290
7	660.100

TABLE OF ESTIMATED QUANTITIES

	BAR	NO	SIZE	LENGTH	WEIGHT
	A	6	11	72'-6"	2311
	D	2	1¼ Ø	1'-8"	14
	H	14	5	64'-0"*	935
	S	60	5	12'-4"	772
	T	10	5	64'-0"*	668
	U	4	6	7'-11"	48
	V	64	5	17'-3"	1151
†	REINFORCING STEEL			LB	5899
	CLASS "C" CONCRETE (ABUT)			CY	42.7
	DRILLED SHAFT (36"Ø)			FT	224

† FOR CONTRACTOR'S INFORMATION ONLY.
* INCLUDED 1'6" LAP SPLICE

NOTES:

1. DESIGNED ACCORDING TO AASHTO 1996 STANDARD AND CURRENT INTERIM SPECIFICATIONS.
2. CALCULATED FOUNDATION LOADS - CAP DRILLED SHAFTS = 110 TONS/DRILLED SHAFT.
3. ALL DIMENSIONS TO THE REINFORCING STEEL ARE TO THE ℄ OF THE BAR UNLESS OTHERWISE NOTED.
4. ALL REINFORCING STEEL IN DRILLED SHAFT IS INCLUDED IN PRICE BID FOR DRILLED SHAFTS.

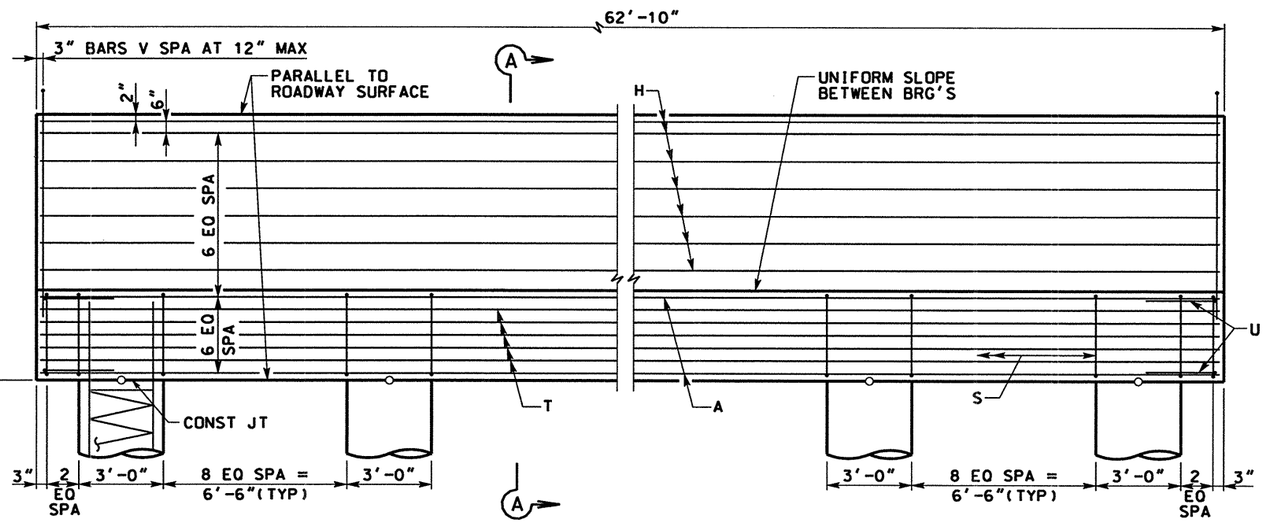

ELEVATION

SCALE: 3/16"= 1'-0"

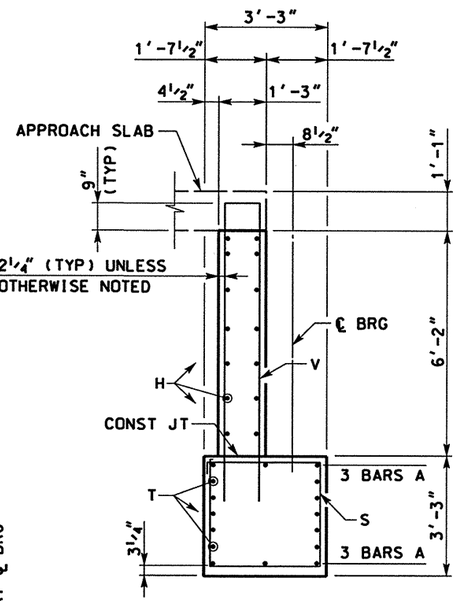

SECTION A-A

SCALE: ¼"= 1'-0"

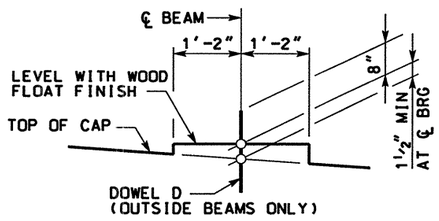

BEARING SEAT DETAIL

(BEARING SURFACE ~~SHALL BE~~ CLEAN AND FREE OF ALL LOOSE MATERIAL BEFORE PLACING BEARING PAD.)

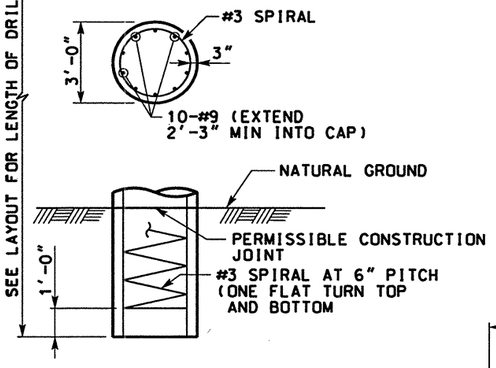

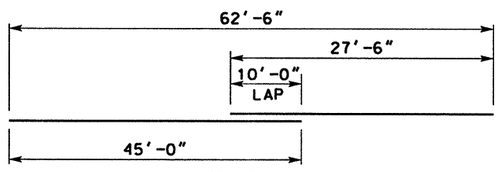

BARS A

NOTE: STAGGER LAP SPLICES

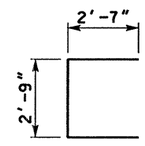

BARS U

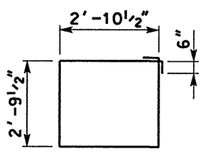

BARS S

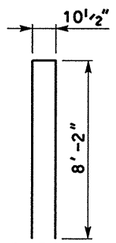

BARS V

HS25 LOADING

STATE OF TEXAS
JAMES B. HORNSBY
81485
REGISTERED PROFESSIONAL ENGINEER

THE SEAL APPEARING ON THIS DOCUMENT WAS AUTHORIZED BY JAMES B. HORNSBY PE 81485, ON JUNE 02, 2003

KBR
Engineered by KBR Technical Services, Inc

©2003 Texas Department of Transportation

IH 35
LOOP 20 TO UNIROYAL ROAD

CARRIER DR
ABUTMENT NO 1

SHEET 1 OF 1

FED RD DIV NO	FEDERAL AID PROJECT NO		SHEET NO
6	NH-2002 (79)		660
STATE	STATE DIST		COUNTY
TEXAS	LAREDO		WEBB
CONT	SECT	JOB	HIGHWAY NO
0018	05	062, ETC	IH 35

6/5/2003
HOUFILE023 \HCIVIL\CF0130\
b70bdp10.dgn-10

REF FILE(S): J01LOP01.BDR, BDR LV ON = 48.57,58.60-62

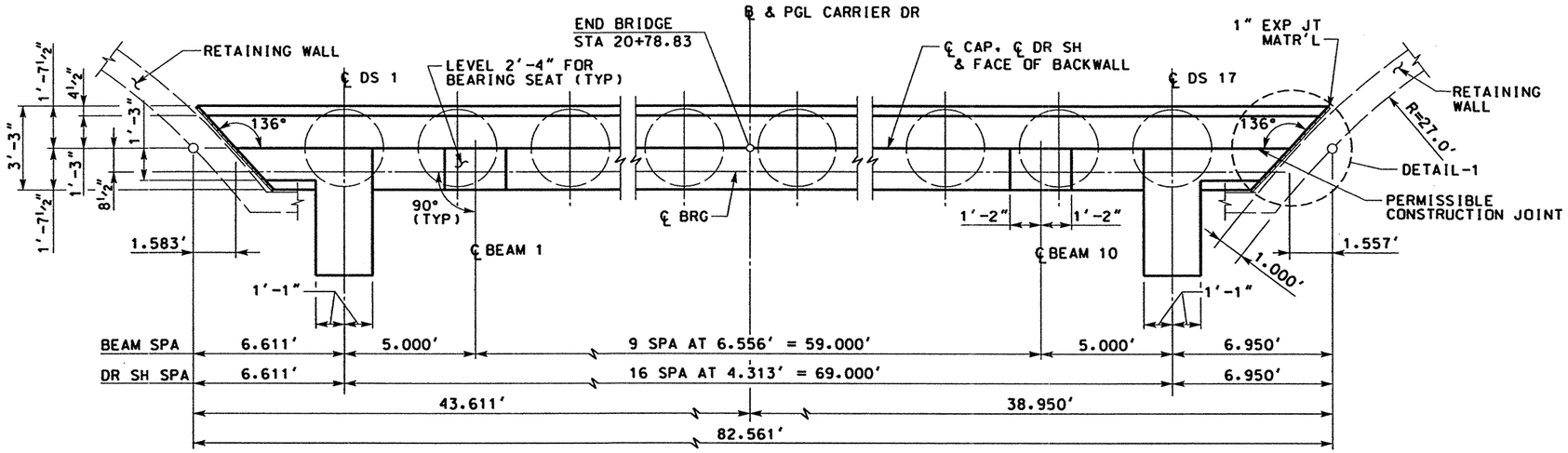

PLAN
SCALE: 3/16" = 1'-0"

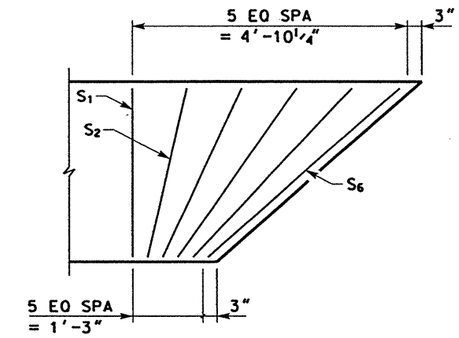

DETAIL-1
SCALE: 3/8" = 1'-0"

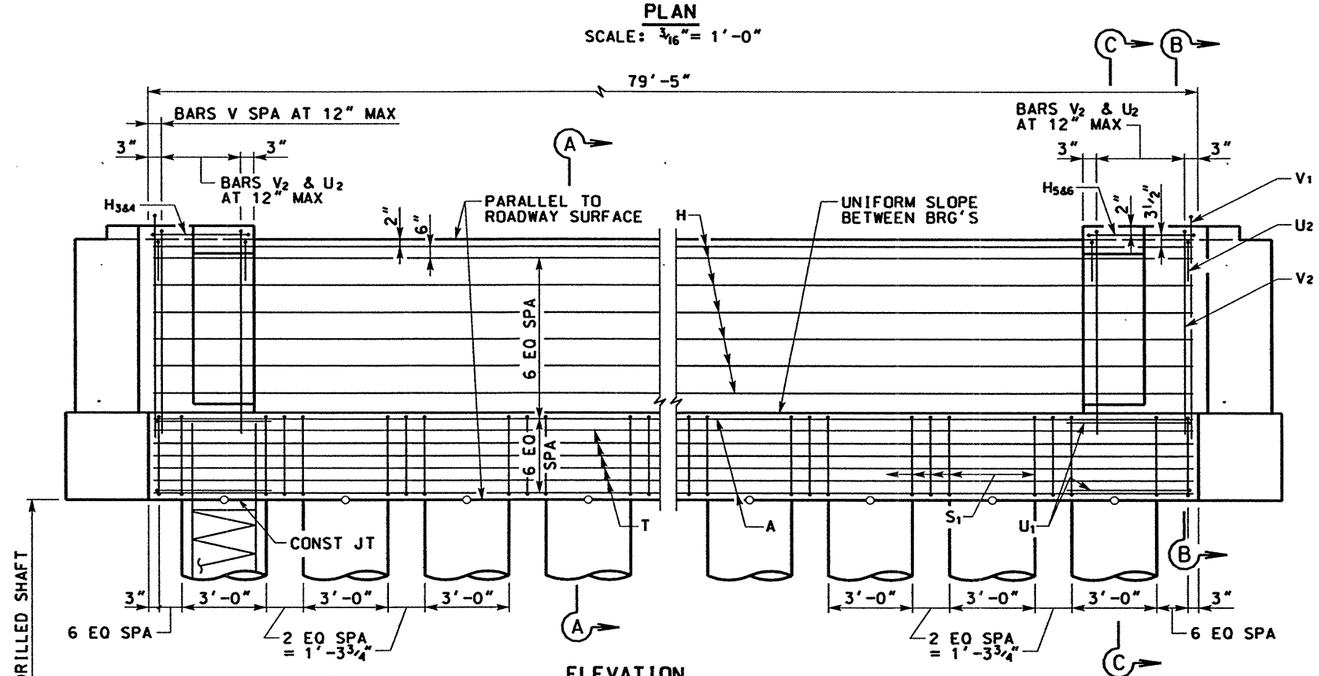

ELEVATION
SCALE: 3/16" = 1'-0"

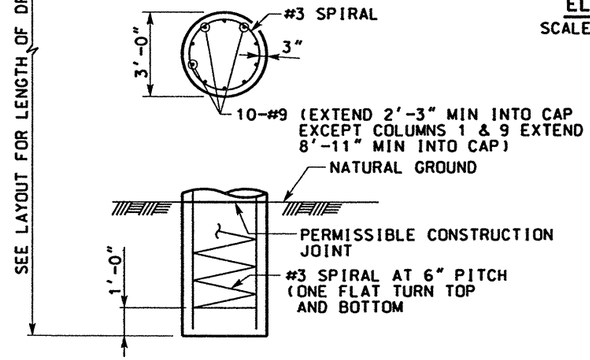

HS25 LOADING

STATE OF TEXAS
JAMES B. HORNSBY
81485
REGISTERED PROFESSIONAL ENGINEER

THE SEAL APPEARING ON THIS DOCUMENT WAS AUTHORIZED BY JAMES B. HORNSBY PE 81485, ON APRIL 18, 2003

KBR
Engineered by KBR Technical Services, Inc

©2003 Texas Department of Transportation

IH 35
LOOP 20 TO UNIROYAL ROAD

CARRIER DR
ABUTMENT NO 2

SHEET 1 OF 2

FED RD DIV NO	FEDERAL AID PROJECT NO		SHEET NO
6	NH-2002 (79)		661
STATE	STATE DIST		COUNTY
TEXAS	LAREDO		WEBB
CONT	SECT	JOB	HIGHWAY NO
0018	05	062, ETC	IH 35

REF FILE(S): J01LOP01.BDR, BDR LV ON = 48,57,58,60-62

b70bdp11.dgn-13 HOUFILE023 \HCIVIL\CF0130\ 4/18/2003

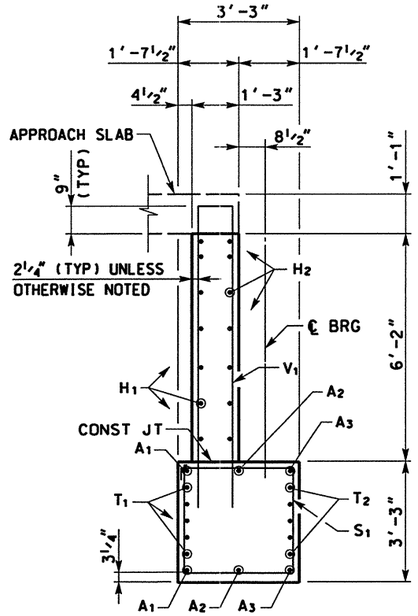

SECTION A-A
SCALE: ¼"= 1'-0"

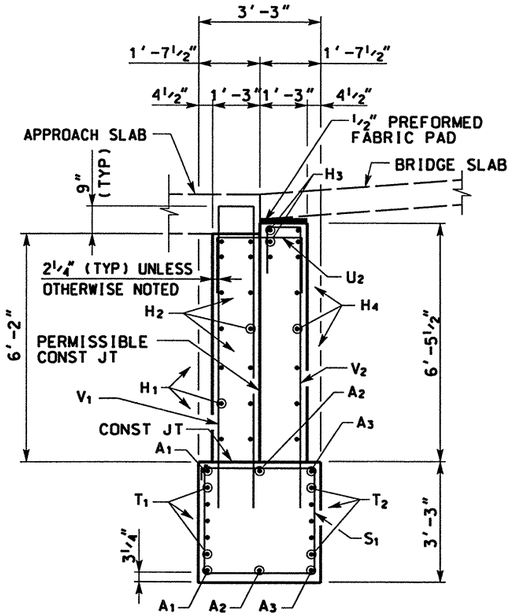

SECTION B-B
SCALE: ¼"= 1'-0"

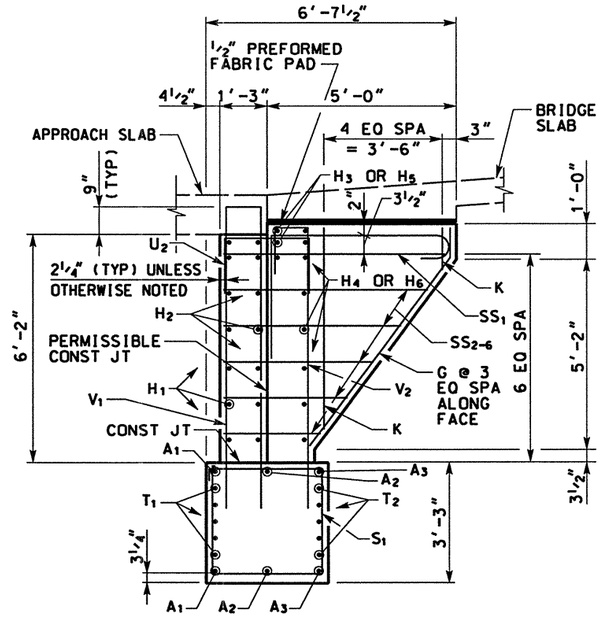

SECTION C-C
SCALE: ¼"= 1'-0"

DS	TOP OF DS ELEV
1	658.855
2	658.879
3	658.902
4	658.926
5	658.950
6	658.974
7	658.997
8	659.021
9	659.045
10	659.019
11	658.992
12	658.946
13	658.899
14	658.853
15	658.806
16	658.760
17	658.713

TABLE OF ESTIMATED QUANTITIES

	BAR	NO	SIZE	LENGTH	WEIGHT
	A_1	2	11	91'-5"	971
	A_2	2	11	89'-0"	946
	A_3	2	11	86'-7"	920
	C	8	9	9'-11"	270
	G	8	9	7'-3"	197
	H_1	7	5	82'-3" *	601
	H_2	7	5	81'-0" *	591
	H_3	3	5	6'-11"	22
	H_4	8	5	5'-7"	47
	H_5	3	5	7'-3"	23
	H_6	8	5	5'-11"	49
	K_1	4	5	1'-0"	4
	$K_{2-4\ AVG}$	12	5	3'-3"	41
	K_5	4	5	5'-6"	23
	S_1	52	5	12'-4"	669
	$S_{2-6\ AVG}$	10	5	14'-0"	146
	SS_1	2	5	16'-3"	34
	$SS_{2-6\ AVG}$	10	5	12'-8"	132
	T_1	5	5	82'-11" *	432
	T_2	5	5	78'-1" *	407
	U_1	4	6	8'-2"	49
	U_2	16	6	5'-2"	124
	V_1	81	5	17'-1"	1443
	V_2	18	5	9'-8"	181
†	REINFORCING STEEL			LB	8322
	CLASS "C" CONCRETE (ABUT)			CY	60.0
* * †	DRILLED SHAFT (36"Ø)			FT	527

† FOR CONTRACTOR'S INFORMATION ONLY.
* INCLUDES 1'-6" LAP SPLICE
* * SEE NOTE 5

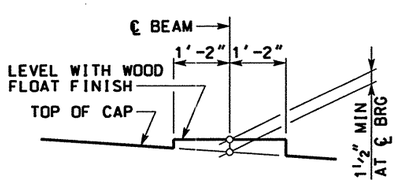

BEARING SEAT DETAIL

(BEARING SURFACE ~~SHALL BE~~ CLEAN AND FREE OF ALL LOOSE MATERIAL BEFORE PLACING BEARING PAD.)

BARS	A	B
A_1	81'-4¾"	46'-4¾"
A_2	79'-0"	44'-0"
A_3	76'-7¼"	41'-7¼"

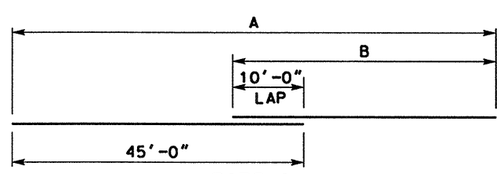

BARS A
NOTE: STAGGER LAP SPLICES

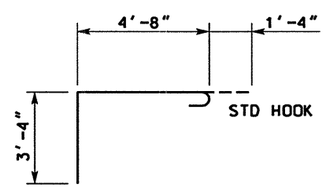

BARS C

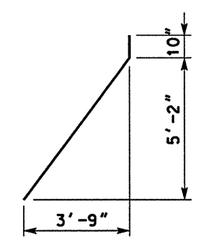

BARS G

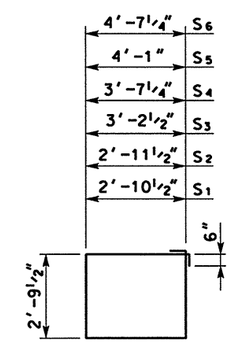

BARS S

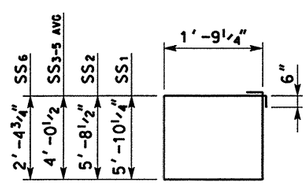

BARS SS

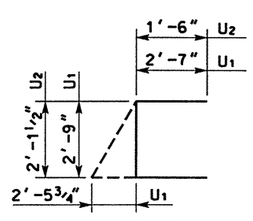

BARS U

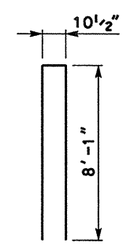

BARS V_1

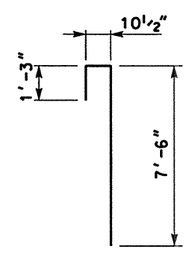

BARS V_2

NOTES:

1. DESIGNED ACCORDING TO AASHTO 1996 STANDARD AND CURRENT INTERIM SPECIFICATIONS.
2. CALCULATED FOUNDATION LOADS - CAP DRILLED SHAFTS = 110 TONS/DRILLED SHAFT.
3. ALL DIMENSIONS TO THE REINFORCING STEEL ARE TO THE ℄ OF THE BAR UNLESS OTHERWISE NOTED.
4. ALL REINFORCING STEEL IN DRILLED SHAFT IS INCLUDED IN PRICE BID FOR DRILLED SHAFTS.
5. 36" Ø DRILLED SHAFTS FOR THIS ABUTMENT ARE PAID FOR AS PART OF RETAINING WALL "P". SEE RETAINING WALL "P" DETAILS FOR ATTACHMENT OF PANELS TO DRILLED SHAFTS.

HS25 LOADING

STATE OF TEXAS
JAMES B. HORNSBY
81485
REGISTERED PROFESSIONAL ENGINEER

THE SEAL APPEARING ON THIS DOCUMENT WAS AUTHORIZED BY JAMES B. HORNSBY PE 81485, ON JUNE 02, 2003

KBR
Engineered by KBR Technical Services, Inc

©2003 Texas Department of Transportation

IH 35
LOOP 20 TO UNIROYAL ROAD

CARRIER DR
ABUTMENT NO 2

SHEET 2 OF 2

FED RD DIV NO	FEDERAL AID PROJECT NO		SHEET NO
6	NH-2002 (79)		662
STATE	STATE DIST		COUNTY
TEXAS	LAREDO		WEBB
CONT	SECT	JOB	HIGHWAY NO
0018	05	062, ETC	IH 35

REF FILE(S): J01LOP01.BDR, BDR LV ON = 48.57.58.60-62

b70bdp20.dgn-12 HOUFILE023 \HCIVIL\CF0130\ 6/5/2003

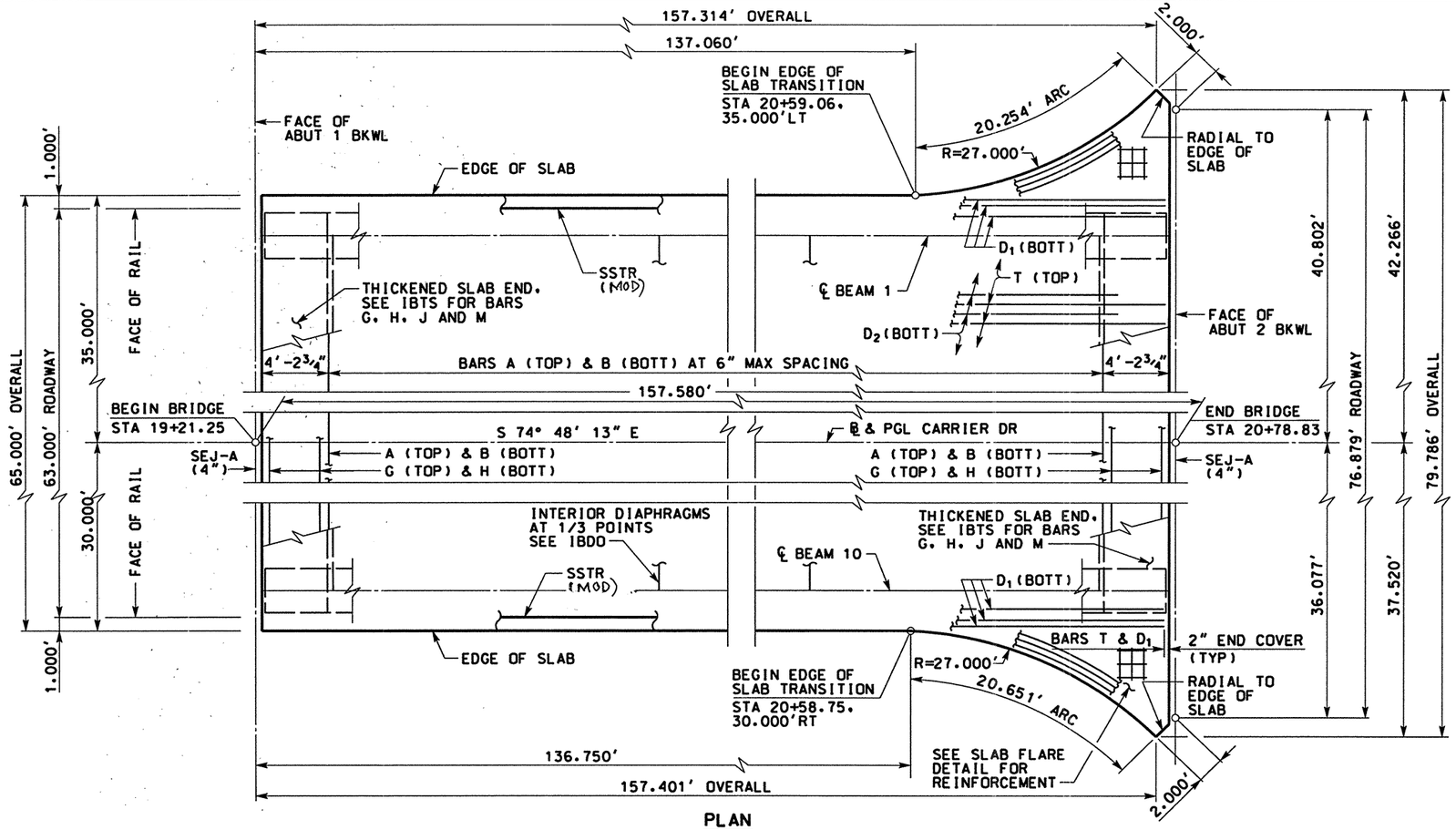

PLAN

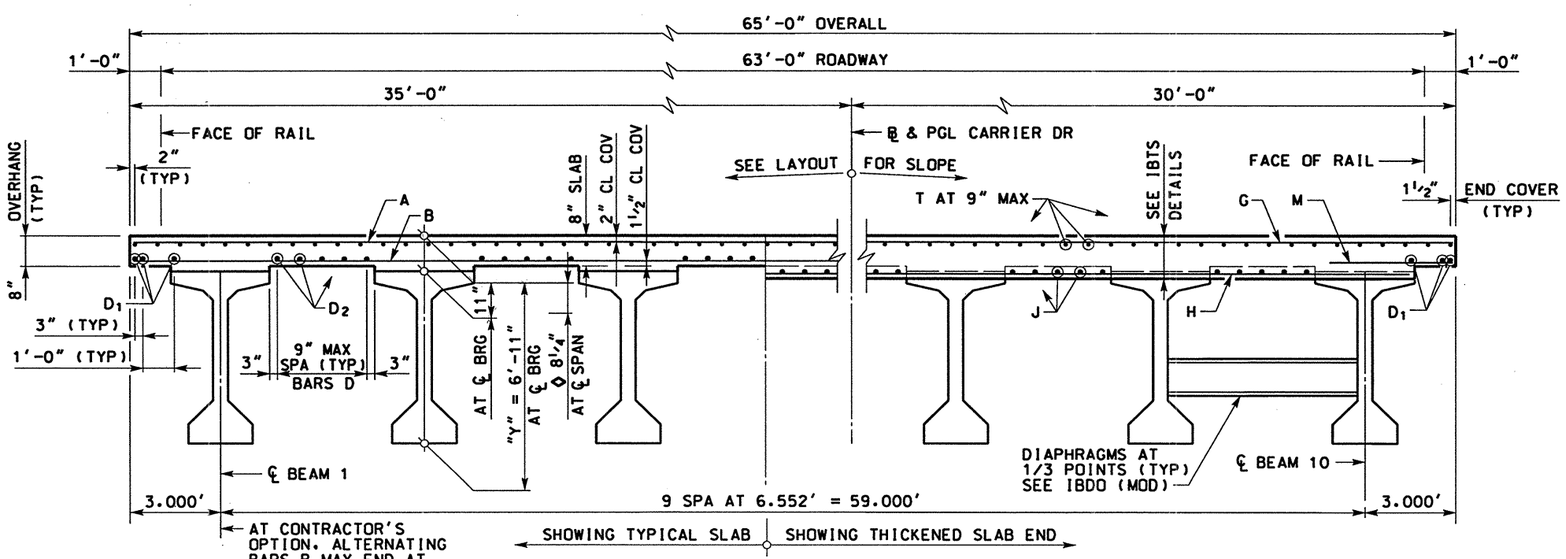

TYPICAL TRANSVERSE SECTION BEGIN BRIDGE TO STA 20+58.75

SCALE: 1"= 5'

BAR TABLE

BAR	SIZE
A	#5
B	#5
D	#5
G	#5
H	#5
J	#5
M	#5
R	#5
T	#4

TABLE OF ESTIMATED QUANTITIES

REINF CONCRETE SLAB	PRESTRESSED CONCRETE BEAMS (TY VI)(MOD)	CLASS "S" CONCRETE †	TOTAL REINF STEEL * †
SF	LF	CY	LB
10.347	1570.90	282.0	67.256

* REINFORCING STEEL WEIGHT IS CALCULATED USING AN APPROXIMATE FACTOR OF 6.5 LBS/SF.

† FOR CONTRACTOR'S INFORMATION ONLY.

◊ THEORETICAL DIMENSION

BEAM REPORT

SPAN	BEAMS	HORIZONTAL DISTANCE		TRUE DISTANCE BOT BM FLG **
		C-C BENT	C-C BRG	
1	ALL	157.580	156.163	157.09

** BEAM LENGTH SHOWN IS BOTTOM BEAM FLANGE LENGTH WITH ADJUSTMENT MADE FOR BEAM SLOPE

NOTES:

1. DESIGNED ACCORDING TO CURRENT AASHTO STANDARD AND INTERIM SPECIFICATIONS.
2. SEE IBTS STANDARD FOR THICKENED SLAB END DETAILS AND QUANTITY ADJUSTMENTS.
3. SEE PCP(C) OR PMDF(C) STANDARDS FOR DETAILS AND QUANTITY ADJUSTMENTS IF EITHER OF THESE OPTIONS ARE USED.
4. ALL REINFORCING ~~SHALL BE~~ GRADE 60.
5. CONCRETE STRENGTH F'c = 4,000 PSI.
6. BAR LAPS, WHERE REQUIRED, ~~SHALL BE~~ AS FOLLOWS:
   UNCOATED ~#4 = 1'-5"
   ~#5 = 1'-9"
   EPOXY COATED ~#4 = 2'-1"
   ~#5 = 2'-7"

HS25 LOADING

0 5 10
SCALE: 1" = 10'

STATE OF TEXAS
JAMES B. HORNSBY
PE 81485
REGISTERED PROFESSIONAL ENGINEER

THE SEAL APPEARING ON THIS DOCUMENT WAS AUTHORIZED BY JAMES B. HORNSBY PE 81485, ON JUNE 02, 2003

KBR
Engineered by KBR Technical Services, Inc

©2003 Texas Department of Transportation

IH 35
LOOP 20 TO UNIROYAL ROAD
CARRIER DR
156.00' PRESTRESSED CONC BEAM UNIT

SHEET 1 OF 2

FED RD DIV NO	FEDERAL AID PROJECT NO	SHEET NO
6	NH-2002 (79)	663
STATE	STATE DIST	COUNTY
TEXAS	LAREDO	WEBB
CONT	SECT / JOB	HIGHWAY NO

6/4/2003
HOUFILE023 \hciwl\c10130\
70sip08.dgn-09
REF FILE(S): J01LOP01.BDR, BDR LV ON = 14:48:57:58:60-62

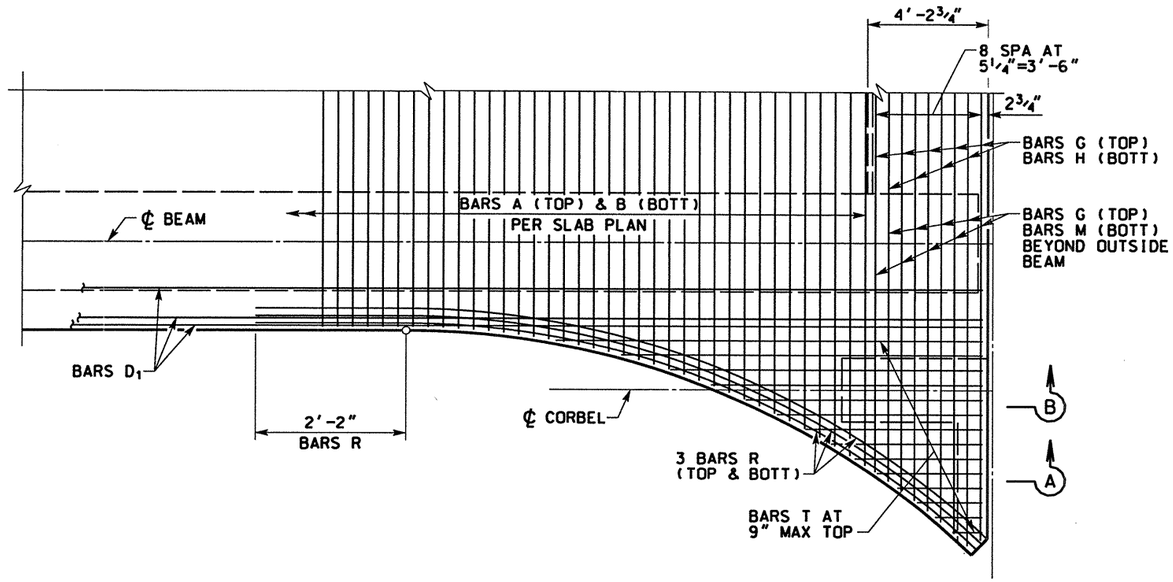

SLAB FLARE DETAIL

"A"	"B"
FT	FT
0.160	0.225

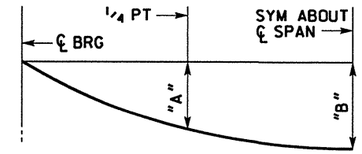

DEAD LOAD DEFLECTION DIAGRAM

NOTE: DEFLECTIONS SHOWN ARE DUE TO CONCRETE SLAB ONLY. ($E_C = 5 \times 10^6$ PSI) CALCULATED DEFLECTIONS SHOWN ARE THEORETICAL AND ACTUAL DIMENSIONS MAY BE LESS. DEFLECTIONS ~~SHALL BE~~ ADJUSTED BASED ON FIELD OBSERVATIONS.

NOTE:

1. PREFORMED FABRIC BEARING PADS ON TOP OF ABUTMENT ~~SHALL BE~~ MANUFACTURED IN ACCORDANCE WITH THE REQUIREMENTS OF ITEM 434. COST OF FURNISHING AND INSTALLING PREFORMED FABRIC BEARING PADS IS INCIDENTAL TO REINF CONC SLAB.

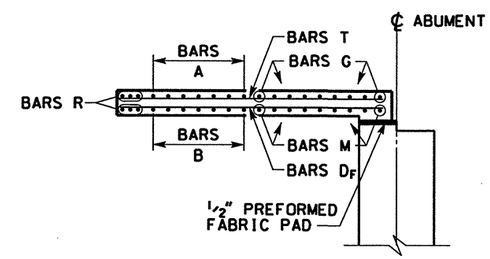

SECTION A

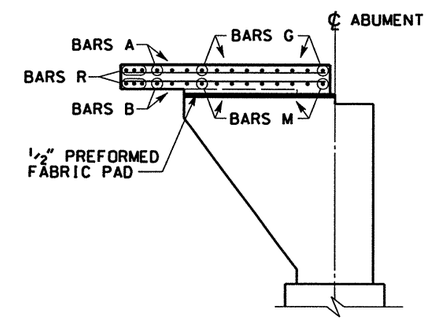

SECTION B

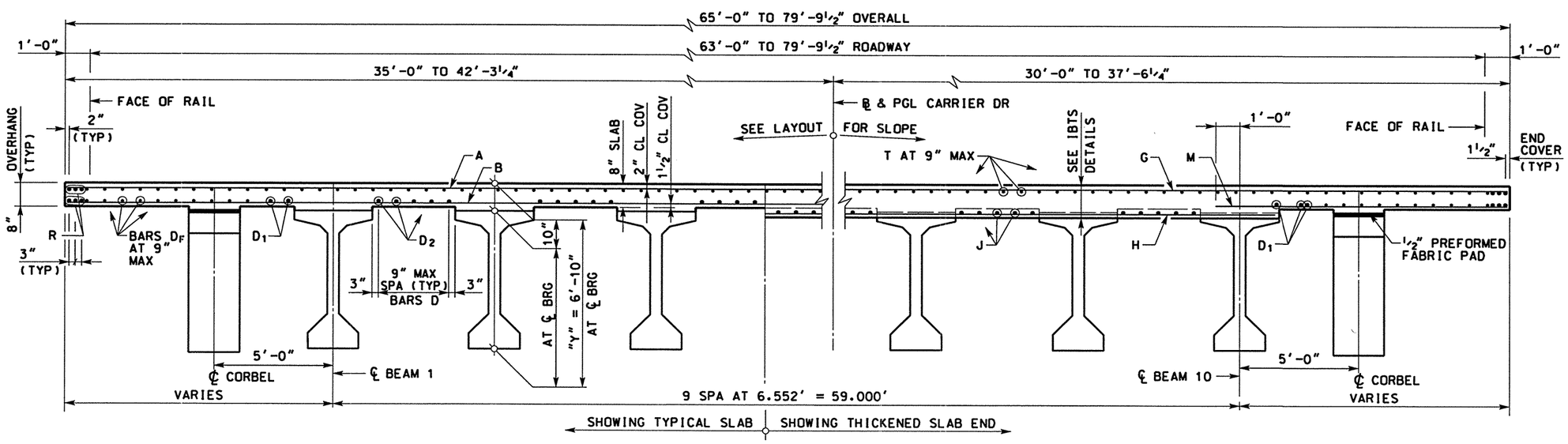

TYPICAL TRANSVERSE SECTION WITH RADIUS

SCALE: 1"= 5'

HS25 LOADING

0 5 10

SCALE: 1" = 10'

STATE OF TEXAS
JAMES B. HORNSBY
81485
REGISTERED PROFESSIONAL ENGINEER

THE SEAL APPEARING ON THIS DOCUMENT WAS AUTHORIZED BY JAMES B. HORNSBY PE 81485, ON JUNE 02, 2003

KBR

Engineered by KBR Technical Services, Inc

©2003 Texas Department of Transportation

IH 35
LOOP 20 TO UNIROYAL ROAD
CARRIER DR
156.00' PRESTRESSED CONC BEAM UNIT

SHEET 2 OF 2

FED RD DIV NO	FEDERAL AID PROJECT NO		SHEET NO
6	NH-2002 (79)		664
STATE	STATE DIST		COUNTY
TEXAS	LAREDO		WEBB
CONT	SECT	JOB	HIGHWAY NO
0018	05	062, ETC	IH 35

REF FILE(S): J01LOP01.BDR, BDR LV ON = 14,48,57,58,60-62

b70slp10.dgn-08 HOUFILE023 \hcivil\cf0130\ 6/4/2003

DESIGNED BEAMS (DEPRESSED STRANDS)

STRUCTURE	SPAN NO	BEAM NO	BEAM TYPE	NON-STD STRAND PATTERN	PRESTRESSING STRANDS TOTAL NO	TOTAL SIZE (in)	TOTAL STRGTH f's (ksi)	TOTAL "e" ℄ (in)	TOTAL "e" END (in)	DEPRESSED NO	DEPRESSED TO (in)	CONCRETE RELEASE STRGTH f'ci (psi)	CONCRETE MINIMUM 28 DAY COMP STRGTH f'c (psi)
CARRIER DR	1	ALL	VIM		86	0.5	270	24.79	10.55	36	70	6549	8886

OPTIONAL DESIGN

DESIGN LOAD COMP STRESS (TOP ℄) fct(psi)	DESIGN LOAD TENSILE STRESS (BOTT ℄) fcb(psi)	REQUIRED MINIMUM ULTIMATE MOMENT CAPACITY (ft-kips)
4026	-5097	13214

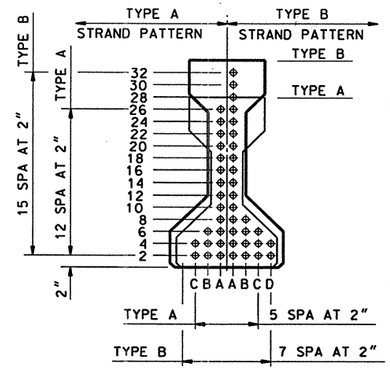

TYPE A & TYPE B BMS

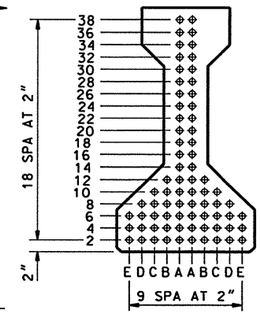

TYPE C BM

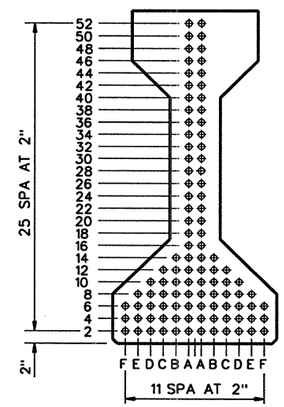

TYPE IV BM
(AASHTO TYPE IV BM)

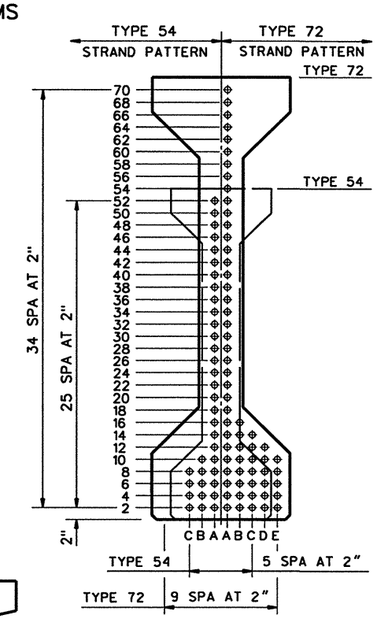

TYPE 54 & TYPE 72 BMS

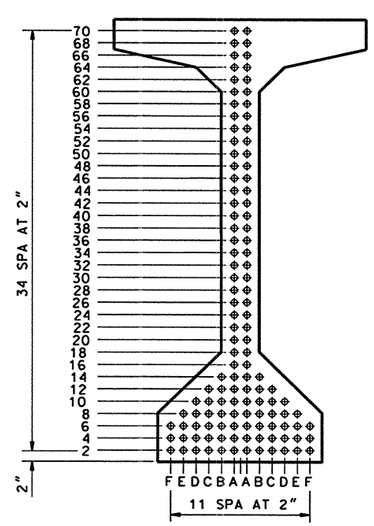

TYPE VIM BM
(AASHTO TYPE VI(MOD) BM)

NON-STANDARD STRAND PATTERNS

PATTERN	STRAND ARRANGEMENT AT ℄ OF BEAM

GENERAL NOTES:

DESIGNED IN ACCORDANCE WITH CURRENT AASHTO STANDARD SPECIFICATIONS.

ALL CONCRETE ~~SHALL BE~~ CLASS H. ALL REINFORCING BARS SHALL BE GRADE 60.

WHEN SHOWN ON THIS SHEET, THE FABRICATOR HAS THE OPTION OF FURNISHING EITHER THE DESIGNED DEPRESSED STRAND BEAM OR AN APPROVED OPTIONAL DESIGN. ALL OPTIONAL DESIGN SUBMITTALS AND SHOP DRAWINGS ~~SHALL BE~~ SIGNED, SEALED AND DATED BY A REGISTERED PROFESSIONAL ENGINEER.

OPTIONAL DESIGNS FOR BEAMS 120 FEET OR LONGER ~~SHALL~~ HAVE A CALCULATED RESIDUAL CAMBER EQUAL TO OR GREATER THAN THAT OF THE DESIGNED BEAM.

PRESTRESS LOSSES FOR THE DESIGNED BEAMS HAVE BEEN CALCULATED FOR A RELATIVE HUMIDITY OF 65 PERCENT. OPTIONAL DESIGNS ~~SHALL~~ LIKEWISE CONFORM.

CERTAIN BEAMS WITH DEPRESSED STRANDS ARE SUBJECT TO CRACKING IN THE END OF THE BEAM. WHEN SUCH CRACKS OCCUR, ALL SUBSEQUENT BEAMS OF THE SAME TYPE AND STRAND PATTERN ~~SHALL~~ HAVE STRANDS DEBONDED IN THE FOLLOWING MANNER:

1. ALTERNATE ROWS OF DEPRESSED STRANDS ~~SHALL BE~~ DEBONDED FOR TWO FEET FROM EACH END OF THE BEAM.
2. ONE HALF OF THE STRAIGHT STRANDS, AS NEARLY AS POSSIBLE, ~~SHALL BE~~ DEBONDED FOR FOUR FEET FROM EACH END OF THE BEAM.
3. THE DEBONDING PATTERN ~~SHALL BE~~ SYMMETRICAL ABOUT THE VERTICAL AXIS OF THE BEAM FOR BOTH DEPRESSED AND STRAIGHT STRANDS.
4. STRANDS ~~SHALL BE~~ DEBONDED SO THAT THE CENTERS OF GRAVITY OF THE DEPRESSED STRANDS AND THE STRAIGHT STRANDS WILL REMAIN WITHIN ONE INCH OF THEIR ORIGINAL LOCATION.
5. STRANDS ~~SHALL BE~~ ENCASED IN PLASTIC TUBING ALONG ENTIRE DEBONDED LENGTH, AND ENDS OF TUBING SHALL BE SEALED WITH WATERPROOF TAPE. SPLIT PLASTIC TUBING MAY BE USED PROVIDED THE SEAM OF THE TUBING IS SUFFICIENTLY SEALED WITH WATERPROOF TAPE TO PROHIBIT GROUT INFILTRATION. WRAPPING OF STRANDS WITH TAPE TO PROVIDE DEBONDING WILL NOT BE PERMITTED.
6. REVISED SHOP DRAWINGS WILL NOT BE REQUIRED.

FOR DEPRESSED STRAND DESIGNED BEAMS, STRANDS ~~SHALL BE~~ LOCATED AS LOW AS POSSIBLE ON THE 2" GRID SYSTEM UNLESS A NON-STANDARD STRAND PATTERN IS INDICATED. FILL ROW "2", THEN ROW "4", THEN ROW "6", ETC., BEGINNING EACH ROW IN THE "A" POSITION AND WORKING OUTWARD UNTIL THE REQUIRED NUMBER OF STRANDS IS REACHED. ALL STRANDS IN THE "A" POSITION ~~SHALL BE~~ DEPRESSED, MAINTAINING THE 2" SPACING SO THAT, AT THE BEAM ENDS, THE UPPER TWO STRANDS ARE IN THE POSITION SHOWN IN THE TABLE.

STRANDS FOR THE DESIGNED BEAM ~~SHALL BE~~ 1/2" 270 ksi LOW RELAXATION STRANDS PRETENSIONED TO 31.0 k EACH.

HS25 LOADING

SHEET 1 OF 1

KBR
Engineered by KBR Technical Services, Inc

©2003 Texas Department of Transportation

PRESTRESSED CONCRETE BEAMS
(NON-STANDARD SPANS)

IBNS

STATE OF TEXAS
JAMES B. HORNSBY
81485
REGISTERED PROFESSIONAL ENGINEER

THE SEAL APPEARING ON THIS DOCUMENT WAS AUTHORIZED BY JAMES B. HORNSBY P.E. 81485, ON APRIL 18, 2003

FILE: ibstd005.dgn	DN: SRT	CK: JBH	DW: JAM	CK: SRT
ORIG DATE:	DIST	FED REG	FEDERAL AID PROJECT	SHEET
REVISIONS	22	6	NH-2002 (79)	665

COUNTY	CONTROL	SECT	JOB	HIGHWAY
WEBB	0018	05	062, ETC	IH 35

b70bdp14.DGN-03 HOUFILE023 \HCIVIL\CF0130\ 4/21/2003

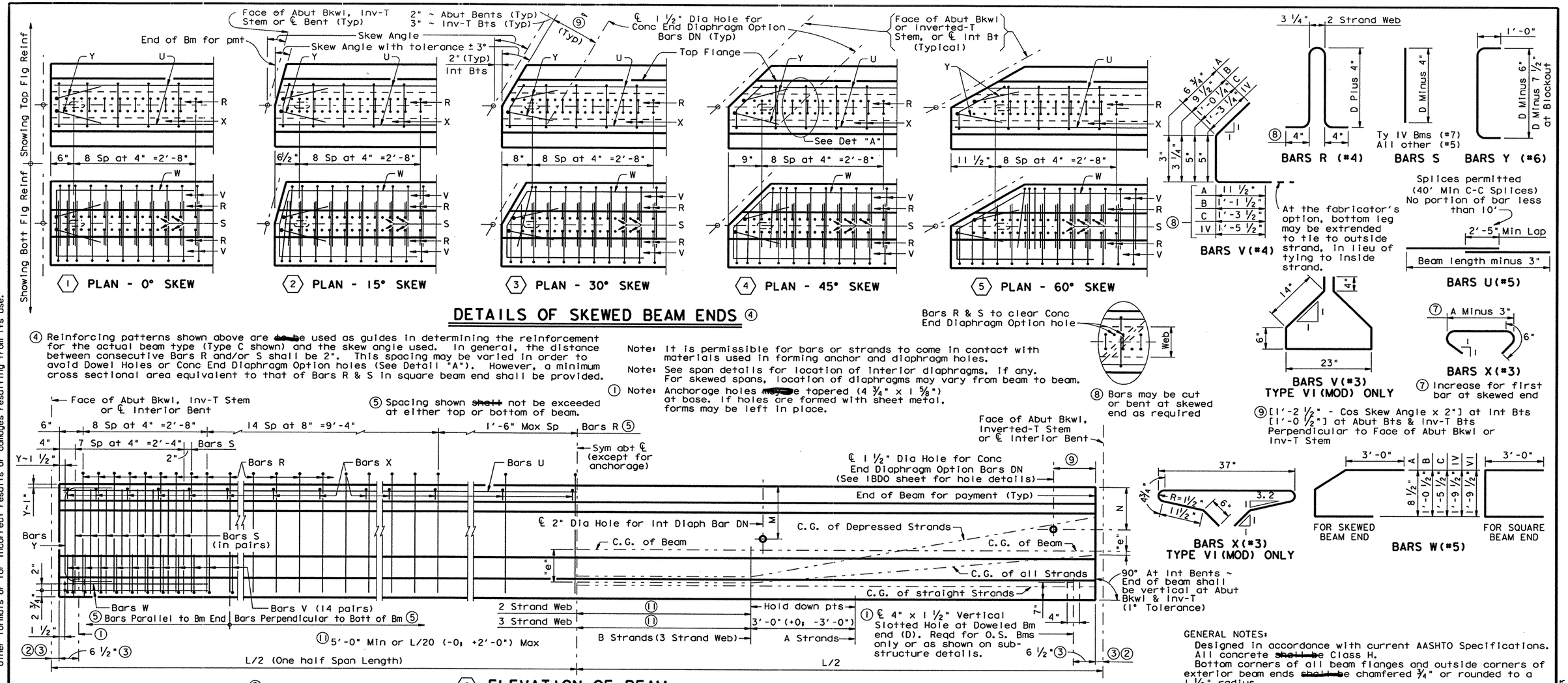

DETAILS OF SKEWED BEAM ENDS ④

④ Reinforcing patterns shown above are ~~to be~~ used as guides in determining the reinforcement for the actual beam type (Type C shown) and the skew angle used. In general, the distance between consecutive Bars R and/or S shall be 2". This spacing may be varied in order to avoid Dowel Holes or Conc End Diaphragm Option holes (See Detail "A"). However, a minimum cross sectional area equivalent to that of Bars R & S in square beam end shall be provided.

Note: It is permissible for bars or strands to come in contact with materials used in forming anchor and diaphragm holes.

Note: See span details for location of interior diaphragms, if any. For skewed spans, location of diaphragms may vary from beam to beam.

① Note: Anchorage holes ~~may be~~ tapered (4 3/4" x 1 5/8") at base. If holes are formed with sheet metal, forms may be left in place.

⑥ ELEVATION OF BEAM

② 3" ~ Inv-T Stem
2" ~ Abut Bkwl & Int Bts

③ Measured along ℄ beam at Int Bts, perpendicular to Abut Bkwl or Inv-T Stem

⑥ $\frac{4'-0"}{\text{Cosine of Skew Angle}}$

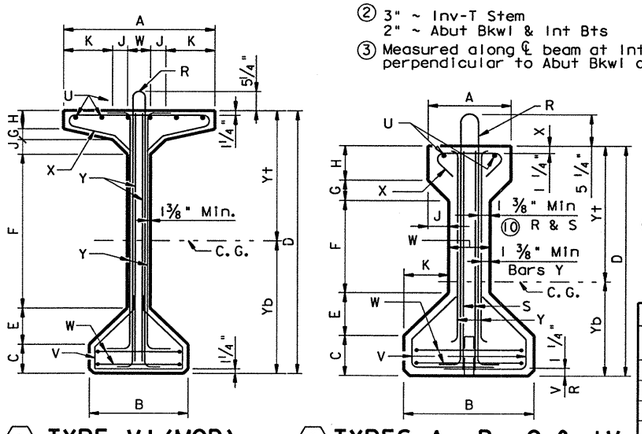

⑦ TYPE VI (MOD) BEAM

⑧ TYPES A, B, C & IV BEAMS

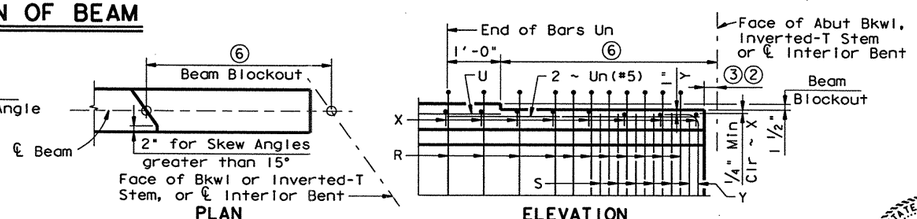

⑨ BLOCKOUT DETAIL FOR THICKENED SLAB END

Note: Beam blockout required only when beam haunch at ℄ Brg is less than 2".

BEAM DIMENSIONS AND SECTION PROPERTIES

BEAM TYPE	A In.	B In.	C In.	D In.	E In.	F In.	G In.	H In.	J In.	K In.	M In.	N In.	W In.	Yt In.	Yb In.	AREA In.²	I In.⁴	Wt/LF Lb.
~~A~~	~~12~~	~~16~~	~~5~~	~~28~~	~~5~~	~~11~~	~~3~~	~~4~~	~~3~~	~~5~~	~~13~~	~~15~~	~~6~~	~~15.39~~	~~12.61~~	~~275.4~~	~~22,658~~	~~287~~
~~B~~	~~12~~	~~18~~	~~6~~	~~34~~	~~5 3/4~~	~~14~~	~~2 3/4~~	~~5 1/2~~	~~2 3/4~~	~~5 3/4~~	~~17~~	~~15~~	~~6 1/2~~	~~19.07~~	~~14.93~~	~~360.3~~	~~43,177~~	~~375~~
C	14	22	7	40	7 1/2	16	3 1/2	6	3 1/2	7 1/2	21	15	7	22.91	17.09	494.9	82,602	516
IV	20	26	8	54	9	23	6	8	6	9	33	18	8	29.25	24.75	788.4	260,403	821
VI (MOD)	40	26	8	72	10	42	3	5	4	13	46	15	6	35.54	36.46	940.4	670,351	980

Note: Tolerance for Dimensions M & N = (+ 1/2" ; -1") (Same tolerance to be applied to all holes for a given Diaphragm Bar DN).

GENERAL NOTES:

Designed in accordance with current AASHTO Specifications.
All concrete ~~shall be~~ Class H.
Bottom corners of all beam flanges and outside corners of exterior beam ends ~~shall be~~ chamfered 3/4" or rounded to a 1 1/2" radius.
Diaphragm holes in ends of beam only for use with concrete end diaphragm option.
The use of diaphragm holes for lifting purposes will not be permitted.
All reinforcing bars for beams ~~shall be~~ Grade 60.
An equal area of welded wire fabric may be substituted for Bars R, V, S or X if approved by the Engineer.

HS25 LOADING

STATE OF TEXAS — JAMES B. HORNSBY — 81485 — REGISTERED PROFESSIONAL ENGINEER

THE SEAL APPEARING ON THIS DOCUMENT WAS AUTHORIZED BY JAMES B. HORNSBY P.E. 81485, ON JUNE 02, 2003

MODIFIED FOR HS25 LOADING

Texas Department of Transportation
Design Division (Bridge)

PRESTRESSED CONCRETE I-BEAM DETAILS

IBA (MOD)

FILE: tbas4del.dgn	DN: THD	CK: MLR	DW: DRG	CK: LDS	STD: B207
©TxDOT September 1998	DIST	FED REG	FEDERAL AID PROJECT •		
REVISIONS	22	6	NH-2002 (79)		666
	COUNTY		CONTROL	SECT	JOB	HIGHWAY
	WEBB		0018	05	062, ETC	IH 35

DISCLAIMER:
The use of this standard is governed by the "Texas Engineering Practice Act". No warranty of any kind is made by TxDOT for any purpose whatsoever. TxDOT assumes no responsibility for the conversion of this standard to other formats or for incorrect results or damages resulting from its use.

LEVELS DISPLAYED (LV=1,2 for English)
1 2 | 14 15 16 17 18 19 10 11 12 13 14 15 16
17 18 19 20 21 22 23 24 25 26 27 28 29 30 31 32
33 34 35 36 37 38 39 40 41 42 43 44 45 46 47 48
49 50 51 52 53 54 55 56 57 58 59 60 61 62 63

ACC:

6/4/2003
HOUFILE023 \hcl\ilcf0130\
b34mpo07.dgn-02

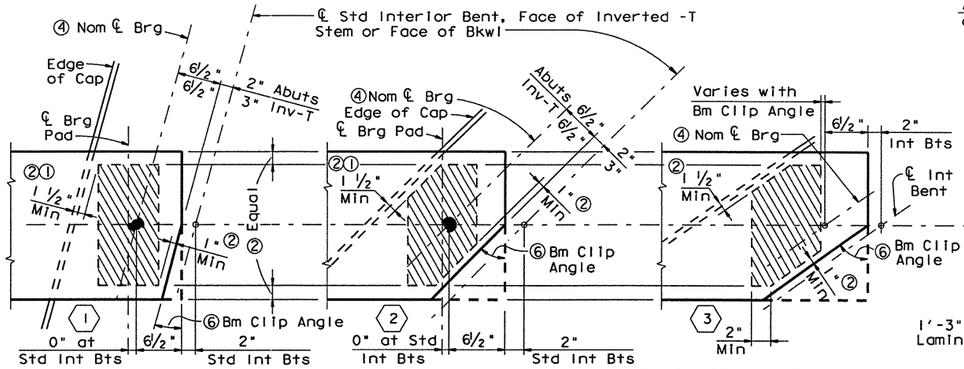

(CONFLICTING BEAMS ONLY)

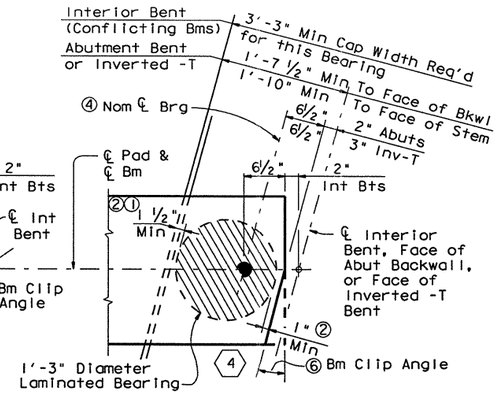

(TYPE IV & TYPE 72 BEAMS ONLY)

ELASTOMERIC BEARING PLACEMENT DIAGRAMS

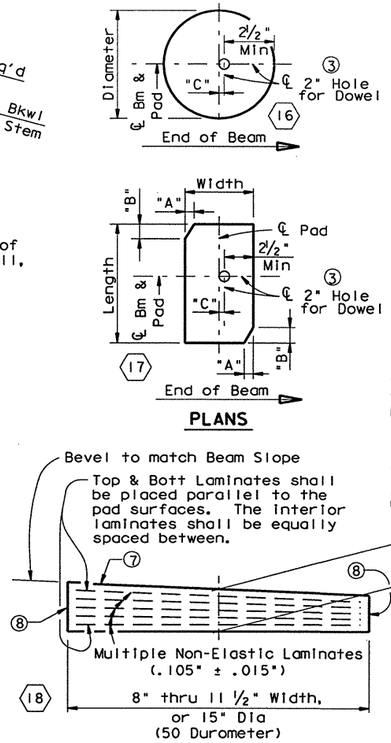

PLANS

ELEVATION

FABRICATION DETAILS

GENERAL NOTES:

Beams ~~shall be~~ seated on elastomeric bearings of the dimensions shown.

Constant thickness bearings may be used for moderate beam slopes if the variation is within the allowable dimensional tolerances given in the specifications.

Shop drawings ~~will be~~ required for all pads not shown or modified in the table.

Cost of furnishing and installing elastomeric bearings ~~shall be~~ included in unit price bid for "Prestressed Concrete Beams".

Note: The use of Polyisoprene (natural rubber), for the manufacture of bearing pads, shall not be permitted.

ELASTOMERIC BEARING FABRICATION DATA TABLE

	Loc	Beam Type	Brg Type	Bm End Clip Angle Range	Pad Size Wdth x Lgth	"A"	"B"	"C" ③
AT ABUTMENTS, INVERTED - T & TRANSITION BENTS WITH BACKWALLS		A	A-1	0° thru 15°	8" x 14"	—	—	½"
		A	A-2	15° + thru 45°	8" x 14"	2¾"	2¾"	½"
		A	A-3	45° + thru 60°	8" x 14"	4¾"	2¾"	½"
		B	B-1	0° thru 10°	8" x 16"	—	—	½"
		B	B-2	10° + thru 45°	8" x 16"	3¾"	3¾"	½"
		B	B-3	45° + thru 60°	9" x 16"	7"	4¼"	½"
		C	C-1	0° thru 5°	9" x 19"	—	—	½"
		C	C-2	5° + thru 15°	9" x 19"	1½"	4½"	½"
		C	C-3	15° + thru 45°	10" x 19"	6¼"	6¼"	½"
		C	C-4	45° + thru 60°	11½" x 19"	10½"	7"	¾"
		54	54-1	0° thru 10°	9" x 14"	—	—	½"
		54	54-2	10° + thru 20°	9" x 14"	1"	2½"	½"
		54	54-3	20° + thru 45°	9" x 14"	3¼"	3¼"	½"
		54	54-4	45° + thru 60°	9" x 14"	5¼"	3¼"	½"
		IV	IV-1	0° thru 15°	9" x 22"	—	—	2"
		IV	IV-2	15° + thru 29°	9" x 22"	2½"	4½"	2"
		IV & 72	IV-3	⑤ 30°	15" Dia	—	—	2⅜"
		IV & 72	IV-4	⑤ 40°	15" Dia	—	—	2⅝"
		IV & 72	IV-5	⑤ 50°	15" Dia	—	—	3⅛"
		IV & 72	IV-6	⑤ 60°	15" Dia	—	—	4"
		72	72-1	0° thru 15°	9" x 20"	—	—	2"
		72	72-2	15° + thru 29°	9" x 20"	2"	3½"	2"
AT INTERIOR BENTS ~ See ⑨ & ⑮	Square Bm Ends	A	A-4	ALL	8" x 14"	—	—	0
		B	B-4	ALL	8" x 16"	—	—	0
		C	C-5	0° thru 10°	9" x 19"	—	—	0
		C	C-6	10° + thru 58°	9" x 19"	1½"	2¼"	0
		C	C-7	58° + thru 60°	9" x 19"	—	—	0
		54	54-5	ALL	9" x 14"	—	—	0
		IV	IV-7	ALL	9" x 22"	—	—	0
		72	72-3	ALL	9" x 20"	—	—	0
		VI (M)	VI-1	ALL	9" x 22"	—	—	0
	Clipped Bm Ends	A	A-5	0° thru 15°	8" x 14"	—	—	¾"
		A	A-6	15° + thru 45°	8" x 14"	2¼"	2¼"	—
		A	A-7	45° + thru 60°	8" x 14"	3½"	2¼"	—
		B	B-5	0° thru 15°	8" x 16"	—	—	¾"
		B	B-6	15° + thru 45°	8" x 16"	3¼"	3¼"	—
		B	B-7	45° + thru 60°	8" x 16"	5"	3¼"	—
		C	C-8	0° thru 5°	9" x 19"	—	—	¾"
		C	C-9	5° + thru 20°	9" x 19"	1¾"	4¾"	1"
		C	C-10	20° + thru 45°	10" x 19"	6"	6"	—
		C	C-11	45° + thru 60°	11½" x 19"	9¼"	6½"	—
		54	54-6	0° thru 13°	9" x 14"	—	—	¾"
		54	54-7	13° + thru 45°	9" x 14"	2¾"	2¾"	—
		54	54-8	45° + thru 60°	9" x 14"	3¾"	2¾"	—
		IV	IV-8	0° thru 15°	9" x 22"	—	—	2"
		IV	IV-9	15° + thru 29°	9" x 22"	2¼"	4"	—
		IV & 72	IV-10	30° thru 60°	15" Dia	—	—	—
		72	72-4	0° thru 15°	9" x 20"	—	—	1¾"
		72	72-5	15° + thru 29°	9" x 20"	1½"	2¾"	—

Table based on 3'-3" cap width for Type 72 and IV and VI (M) Beams; 2'-9" cap width for all other type beams.

Table based on 1'-10" Inverted - T corbel width for Type 72 and IV Beams; 1'-8" corbel width for all other type beams.

6/4/2003

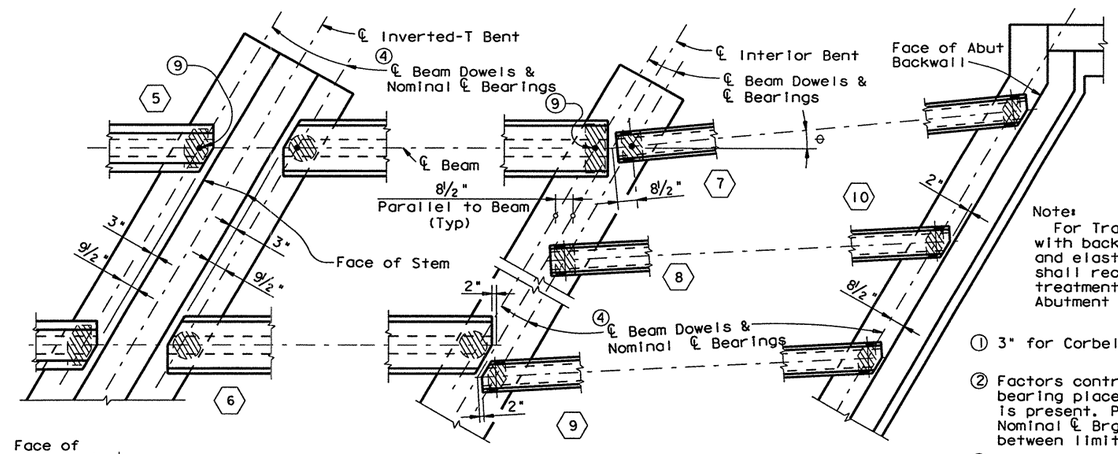

Note:
For Transition Bents with backwall, beams and elastomeric bearings shall receive the same treatment as shown for Abutment Bents

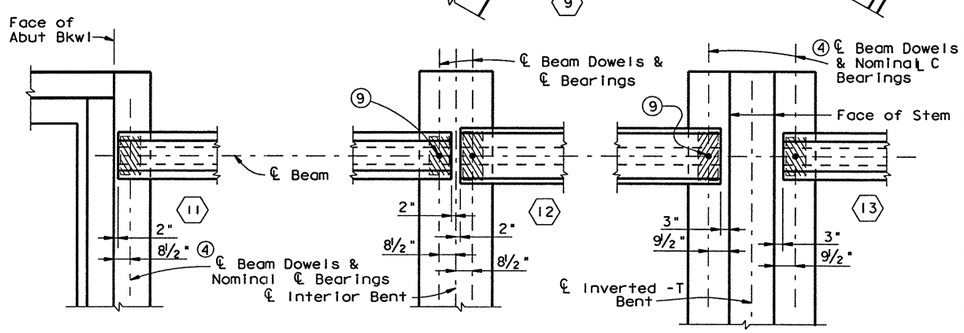

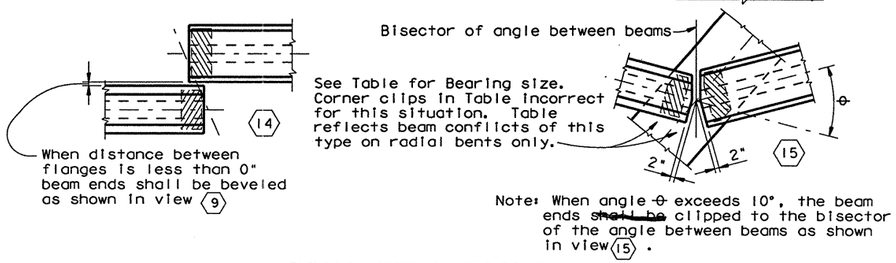

Note: When angle θ exceeds 10°, the beam ends ~~shall be~~ clipped to the bisector of the angle between beams as shown in view ⑮.

BEAM END DETAILS

① 3" for Corbels of Inverted -T.

② Factors controlling laminated bearing placement if no dowel is present. Place ℄ Pad as near Nominal ℄ Brg as possible between limits shown.

③ Provide 2" Dia Hole (always on beam end side of centerline pad) only at locations required. See substructure details for location.

④ For purposes of computing Bearing Seat Elevations, nominal centerline of bearing ~~shall be~~ defined as shown. The actual center of bearing pad may vary from this line, according to the "C" value shown in Table. If table shows no "C" value, See ②

⑤ Interpolate "C" values for angles not shown between 30° & 40°, 40° & 50°, 50° & 60°.

⑥ Complement of Beam Angle except at some conflicting beams. See ⑮

⑦ Locate "BRG TYPE" identification here

⑧ Locate Permanent Mark here

⑨ Provide Beam Dowels for outside beams only when shown (D) on Layout (Beams adjacent to a longitudinal joint at the median are considered as outside beams).

HS25 LOADING

STATE OF TEXAS JAMES B. HORNSBY 81485 REGISTERED PROFESSIONAL ENGINEER

THE SEAL APPEARING ON THIS DOCUMENT WAS AUTHORIZED BY JAMES B. HORNSBY P.E. 81485, ON JUNE 02, 2003

MODIFIED FOR HS25 LOADING AND TO INCLUDE TY VI BEAMS (MOD)

Texas Department of Transportation
Design Division (Bridge)

ELASTOMERIC BEARING AND BEAM END DETAILS

(FOR PRESTR CONC I-BEAMS)

IBB (MOD)

FILE: ~~ibbstd1.dgn~~	DN: TxDOT	CK: JMH	DW: TxDOT	CK: LDS	STD: B208
©TxDOT September 1998	DIST	FED REG	FEDERAL AID PROJECT		SHEET
REVISIONS	22	6	NH-2002 (79)		667
	COUNTY		CONTROL	SECT	JOB	HIGHWAY
	WEBB		0018	05	062, ETC	IH 35

DISCLAIMER:
The use of this standard is governed by the "Texas Engineering Practice Act". No warranty of any kind is made by TxDOT for any purpose whatsoever. TxDOT assumes no responsibility for the conversion of this standard to other formats or for incorrect results or damages resulting from its use.

LEVELS DISPLAYED 1 2 3 4 5 6 7 8 9 10 11 12 13 14 15 16 17 18 19 20 21 22 23 24 25 26 27 28 29 30 31 32 33 34 35 36 37 38 39 40 41 42 43 44 45 46 47 48 49 50 51 52 53 54 55 56 57 58 59 60 61 62 63

ACC: (LV=1,2 for English)

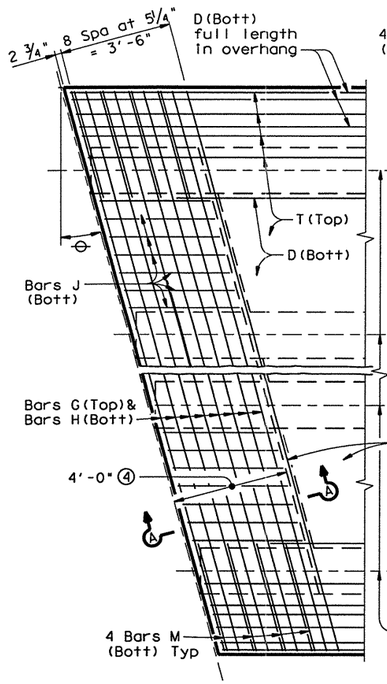

PARTIAL PLAN FOR SLABS WITHOUT BREAKBACK

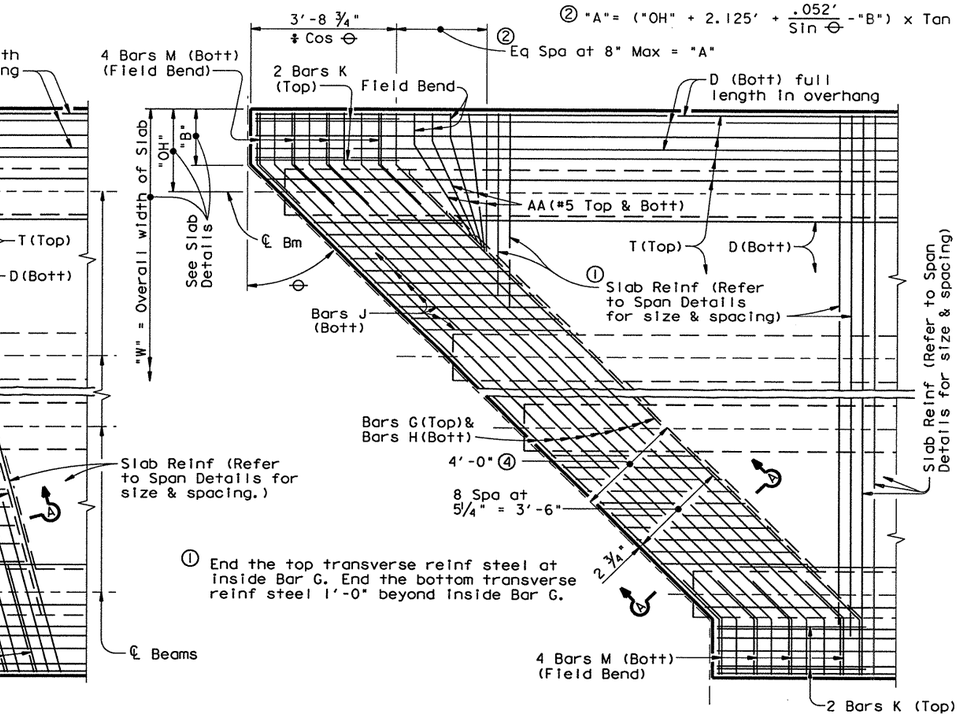

PARTIAL PLAN FOR SLABS WITH BREAKBACK

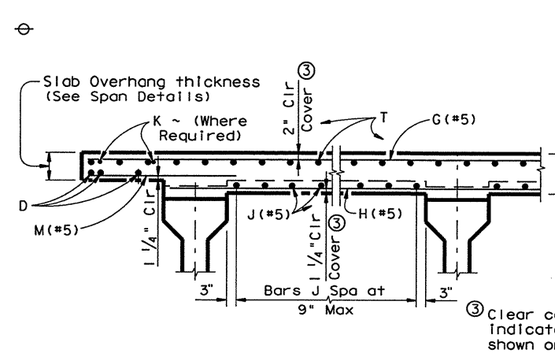

TYPICAL TRANSVERSE SECTION

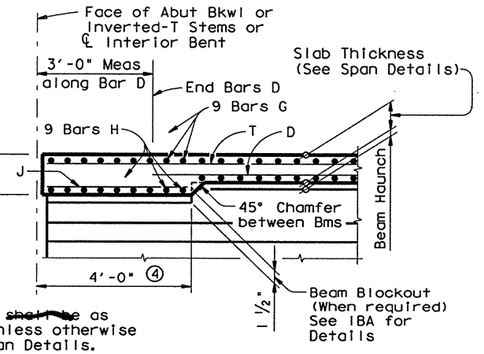

SECTION A-A

③ Clear cover ~~shall be~~ as indicated unless otherwise shown on Span Details.

④ Thickened Slab End dimensioned perpendicular to Face of Abutment Backwall or Inverted-T Stems or ℄ Interior Bents.

GENERAL NOTES:

Designed according to current AASHTO Standard Specifications for Highway Bridges.

All reinforcing bars ~~shall be~~ Grade 60 steel.

Unless otherwise shown or noted hereon, all Span Details remain unchanged.

If the top and/or bottom layer of reinforcing steel is shown on the Slab Details to be epoxy coated, then the G & K and/or H, J & M bars shall be epoxy coated.

Bar laps, where required, ~~shall be~~ as follows:

Uncoated ~ #4 = 1'-5"
~ #5 = 1'-9"
Epoxy Coated ~ #4 = 2'-1"
~ #5 = 2'-7"

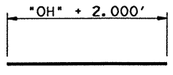

BARS AA (#5)

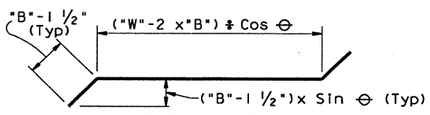

BARS G (#5)
(For Slabs With Breakbacks)

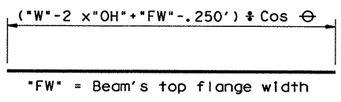

BARS H (#5)

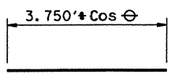

BARS J (#5)

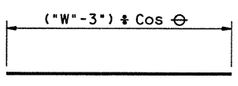

BARS G (#5)
(For Slabs Without Breakbacks)

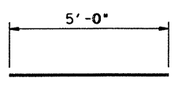

BARS K (#5)

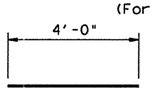

BARS M (#5)

HS25 LOADING

STATE OF TEXAS
JAMES B. HORNSBY
81485
REGISTERED PROFESSIONAL ENGINEER

THE SEAL APPEARING ON THIS DOCUMENT WAS AUTHORIZED BY JAMES B. HORNSBY P.E. 81485, ON JUNE 02, 2003

MODIFIED FOR HS25 LOADING

Texas Department of Transportation
Design Division (Bridge)

THICKENED SLAB END DETAILS FOR PRESTR I-BEAM SPANS

IBTS (MOD)

FILE: ~~ibstd006.dgn~~	DN: THD	CK: DWM	DW: DRG	CK: LDS	STD: B212
© TxDOT September 1998	DIST	FED REG	FEDERAL AID PROJECT		SHEET
REVISIONS	22	6	NH-2002 (79)		668
	COUNTY		CONTROL	SECT	JOB	HIGHWAY
	WEBB		0018	05	062, ETC	IH 35

DISCLAIMER:
The use of this standard is governed by the "Texas Engineering Practice Act". No warranty of any kind is made by TxDOT for any purpose whatsoever. TxDOT assumes no responsibility for the conversion of this standard to other formats or for incorrect results or damages resulting from its use.

LEVELS DISPLAYED
1 2 3 4 5 6 7 8 9 10 11 21 31 41 51 61
17 18 19 32 12 22 32 42 52 62 72 82 92 103 113 132
33 43 53 63 73 83 94 104 114 124 134 144 154 164 174 184
95 105 115 125 135 145 155 165 176 186 196 206 216 226 236 246
ACC: (LV=1,2 for English)

6/4/2003
H:\MFIL F023 \bstvrll\ibt0130\
HDLIFIL F023 \bstvrll\ibt0130\ibstd006.dgn 02-

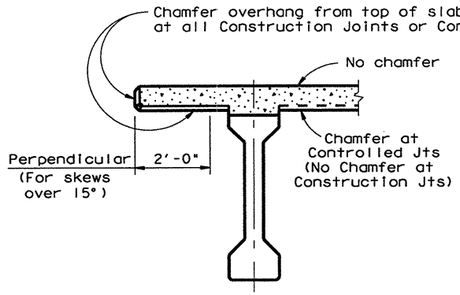

CHAMFER LIMITS DETAIL

Note: See Span details for type of joint and joint locations.

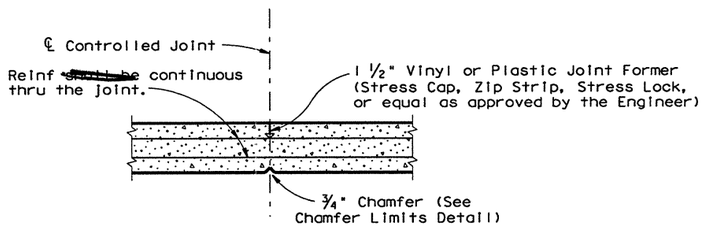

CONTROLLED JOINT DETAIL

(Controlled Joints ~~shall~~ not be used for simple spans)

Note: For continuous placement, the minimum rate of concrete placing and finishing ~~shall~~ not be less than 30 linear feet of bridge deck per hour.

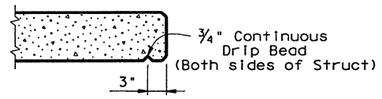

DRIP BEAD DETAIL

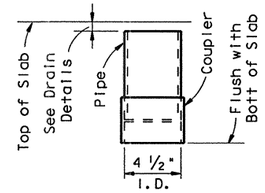

C.I.P. DRAIN DETAIL

Note: Roughen outside of PVC with coarse rasp or equal to ensure bond with cast-in-place concrete.

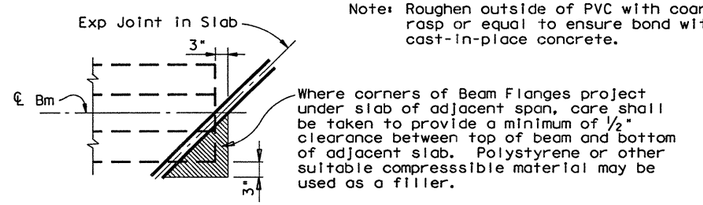

TREATMENT AT BEAM END FOR SKEWED SPANS

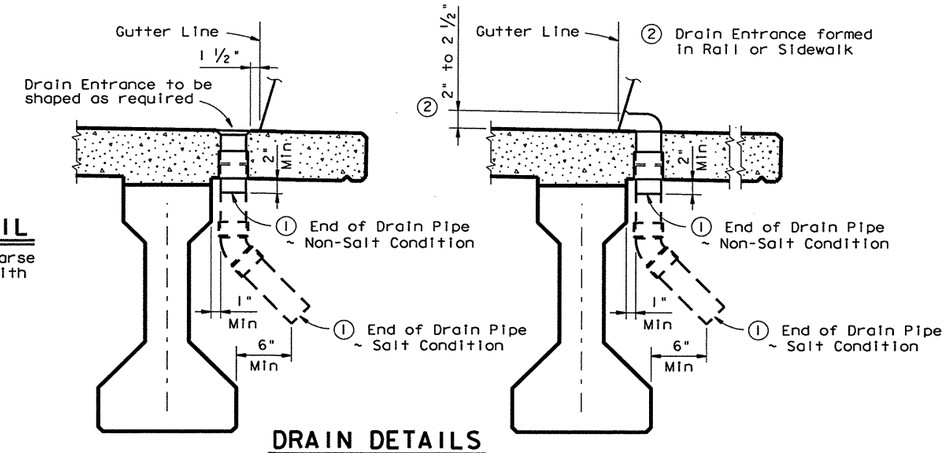

DRAIN DETAILS

① The longer drain length shown ~~shall be~~ used on structures where the use of deicing salts is anticipated.

Note: All drain pipe and fittings to be 4" diameter (Sch 40) PVC. See item 481 "PVC Pipe for Bridge Drains" for pipe, connections and solent welding. Bend reinforcing steel to clear PVC 1". Drain length and location ~~shall be~~ as directed by the Engineer. No drains ~~shall be~~ permitted over roadways or railways, or within 10'-0" of Bent Caps. Degrease outside of exposed PVC, apply acrylic water base primer, then coat with same surface finishing material as used for outside girder face. Variations of the above designs, as required for the type of rail used and it's location on the structure, ~~shall be~~ installed with the approval and direction of the Engineer. No water ~~shall be~~ discharged onto girders.

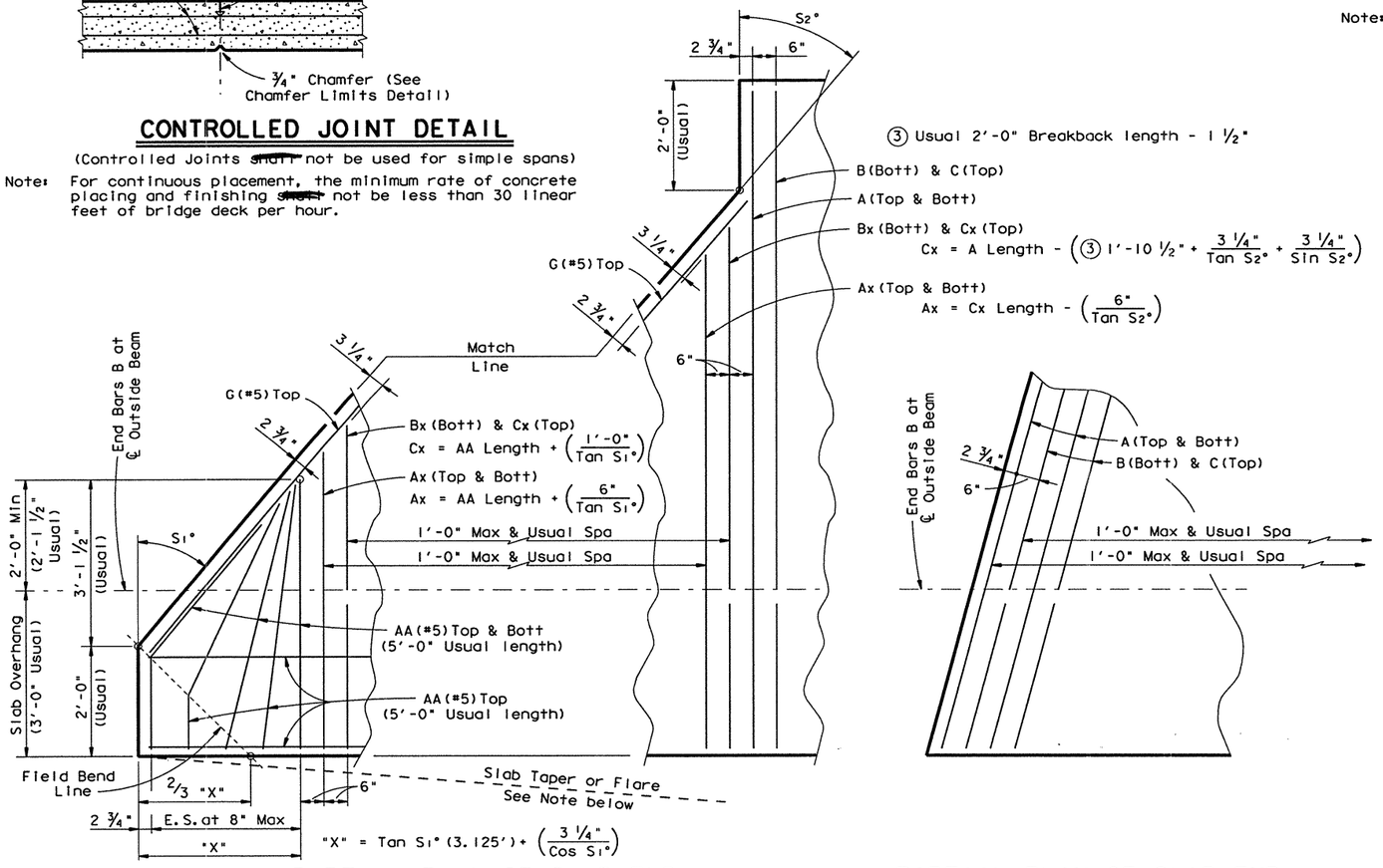

PARTIAL PLAN OF SLAB END WITH BREAKBACK

(For use with Concrete End Diafram Option ~ See IBDO Standard)

Note: Bar length formulas shown for constant width slabs. Adjustment ~~shall be~~ made for slab taper or flare.

PARTIAL PLAN OF SLAB END WITHOUT BREAKBACK

(For use with Concrete End Diafram Option ~ See IBDO Standard)

GENERAL NOTES:

Designed in accordance with current AASHTO Specifications.

All cast-in-place concrete ~~shall be~~ Class S unless otherwise shown on span details.

All reinforcing steel ~~shall be~~ Grade 60.

See Span Detail sheet for epoxy coating requirements and lap lengths, if required.

HS25 LOADING

STATE OF TEXAS — JAMES B. HORNSBY — 81485 — REGISTERED PROFESSIONAL ENGINEER

THE SEAL APPEARING ON THIS DOCUMENT WAS AUTHORIZED BY JAMES B. HORNSBY P.E. 81485, ON JUNE 02, 2003

MODIFIED FOR HS25 LOADING

Texas Department of Transportation
Design Division (Bridge)

MISCELLANEOUS SLAB DETAILS FOR PRESTRESSED I-BEAMS

IBMS (MOD)

FILE: ibmsslder.dgn	DN: THD	CK: THD	DW: DRG	CK: LDS	STD: B210
©TxDOT September 1998	DIST	FED REG	FEDERAL AID PROJECT		SHEET
REVISIONS	22	6	NH-2002 (79)		669
	COUNTY		CONTROL	SECT	JOB	HIGHWAY
	WEBB		0018	05	062, ETC	IH 35

DISCLAIMER:
The use of this standard is governed by the "Texas Engineering Practice Act". No warranty of any kind is made by TxDOT for any purpose whatsoever. TxDOT assumes no responsibility for the conversion of this standard to other formats or for incorrect results or damages resulting from its use.

ACC: (LV=1,2 for English)

LEVELS DISPLAYED 1 2

6/4/2003

HDIFIIF023 \bridlib\cfd130\ b34mpl10.dgn-02

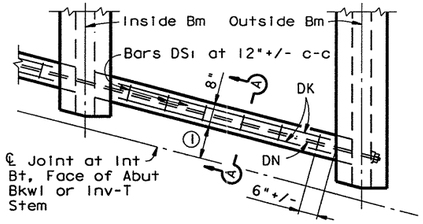

PLAN OF END DIAPHRAGMS

① 11 ½" ~ Inv-T Bts
10 ½" ~ Abut Bts & Int Bts

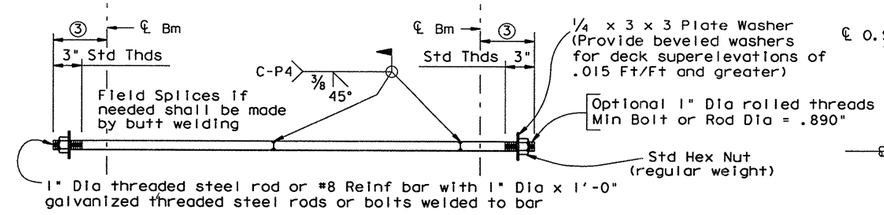

Note: After fabrication, the nuts, plates, sleeves, and not less than 10" of each end of the threaded bar ~~shall be~~ galvanized. Plate washers, nuts, and pipe sleeves are ~~to be~~ considered subsidiary to reinforcing steel.

BARS DN

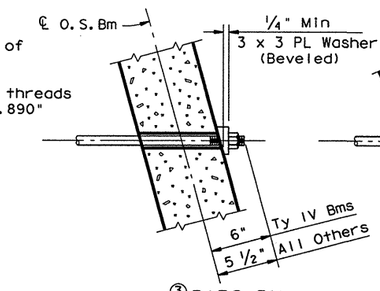

③ BARS DN (SKEWS THRU 15°)

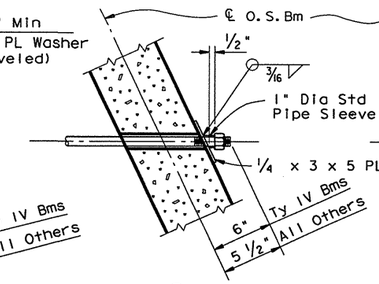

③ BARS DN (SKEWS OVER 15°)

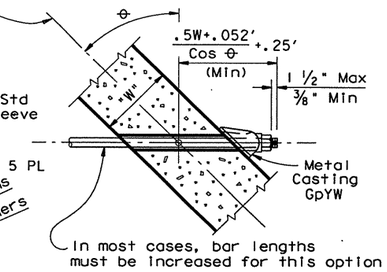

③ BARS DN WITH OPTIONAL CASTING FOR ALL SKEWS

Note: Details of metal casting GpYW are available upon request from the Texas Department of Transportation. No additional payment will made for castings or extra bar length furnished under this option. Castings are ~~to be~~ considered subsidiary to reinforcing steel.

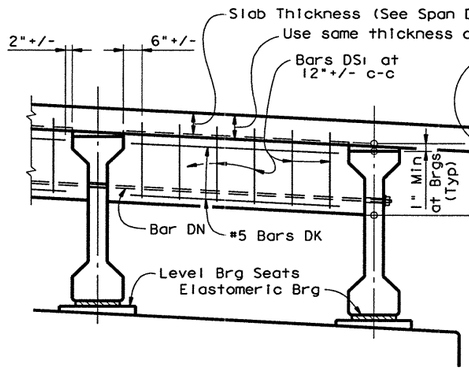

ELEVATION - END DIAPHRAGMS

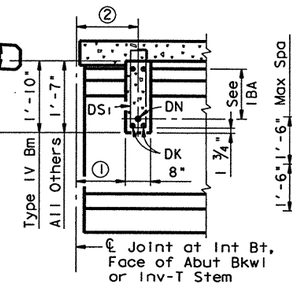

SECTION A-A

② 1'-3 ½" ~ Inv-T Bts
1'-2 ½" ~ Abut Bts & Int Bts

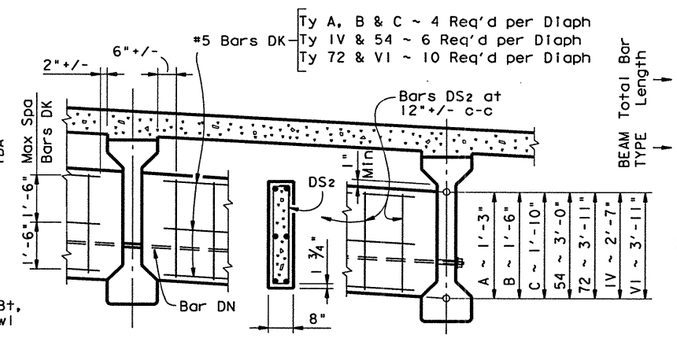

ELEVATION - INTERIOR DIAPHRAGMS

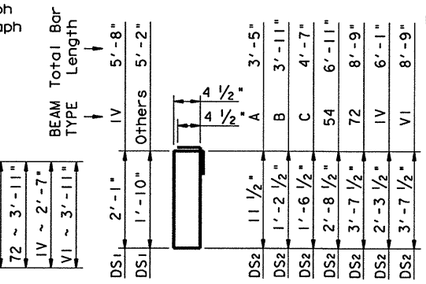

#4 BARS DS1 & DS2

Note: Details of metal casting GpYW are available upon request from the Texas Department of Transportation. No additional payment will made for castings or extra bar length furnished under this option. Castings are ~~to be~~ considered subsidiary to reinforcing steel.

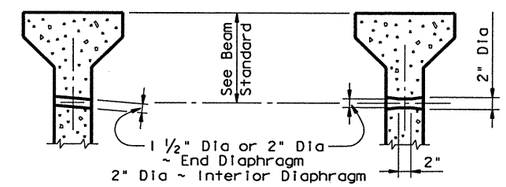

Form holes parallel to roadway slope if superelevation is greater than .03'/Ft for 1 ½" Dia holes or .06'/Ft for 2" Dia holes.

DIAPHRAGM HOLE LOCATIONS

CONCRETE DIAPHRAGM OPTION

CONCRETE DIAPHRAGM NOTES:

All Cast-in-place concrete ~~shall be~~ Class S unless otherwise shown on span details.

No concrete ~~shall be~~ placed in the bridge slab until the diaphragms are in place, the diaphragm concrete has reached a minimum flexural strength of 300 psi, and the nuts of bars DN have subsequently been firmly tightened.

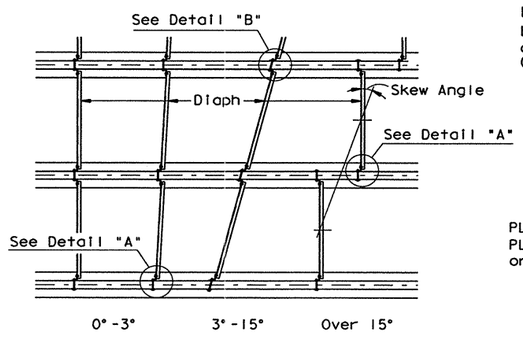

PLAN OF DIAPHRAGM FRAMING

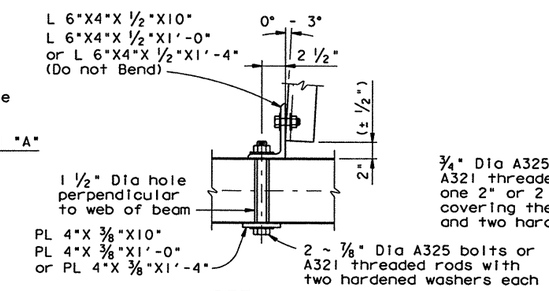

DETAIL "A"

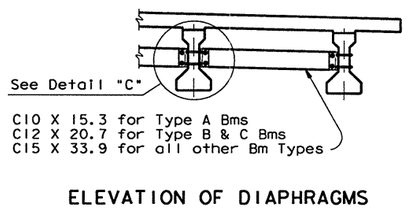

ELEVATION OF DIAPHRAGMS

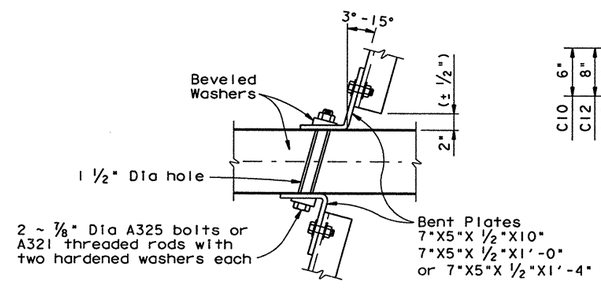

DETAIL "B"

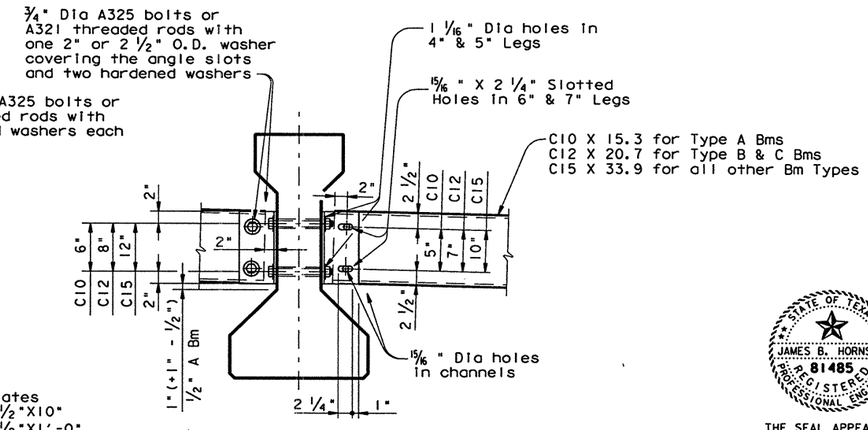

DETAIL "C"

STEEL INTERIOR DIAPHRAGM OPTION

STEEL DIAPHRAGM NOTES:

All parts of steel diaphragms ~~shall be~~ galvanized after fabrication. After erection, all scratched or otherwise damaged galvanized parts ~~shall be~~ repaired in accordance with item "Galvanizing".

GENERAL NOTES:

Designed in accordance with current Specifications.

End Diaphragm options hereon may be used in lieu of the Thickened Slab Ends shown on the IBTS Sheet or Span Details.

Number and location of interior Diaphragms ~~shall be~~ shown elsewhere in the plans.

Contractor shall notify prestressed beam fabricator as to which diaphragm option he intends to use. Option selected ~~shall be~~ incorporated in shop drawings.

Payment for any diaphragm option used ~~shall be~~ included in the price bid for Reinforced Concrete Slab.

All reinforcing ~~shall be~~ Grade 60.

HS25 LOADING

STATE OF TEXAS
JAMES B. HORNSBY
81485
REGISTERED PROFESSIONAL ENGINEER

THE SEAL APPEARING ON THIS DOCUMENT WAS AUTHORIZED BY JAMES B. HORNSBY P.E. 81485, ON JUNE 02, 2003

MODIFIED FOR HS25 LOADING AND TO INCLUDE TY VI BEAMS (MOD)

Texas Department of Transportation
Design Division (Bridge)

DIAPHRAGM OPTIONS FOR PRESTRESSED I-BEAMS

IBDO (MOD)

FILE: IBdoSlder.dgn	DN: THD	CK: THD	DW: DRG	CK: LDS	STD: B209
©TxDOT September 1998	DIST	FED REG	FEDERAL AID PROJECT		SHEET
REVISIONS	22	6	NH-2002 (79)		670
	COUNTY		CONTROL	SECT	JOB	HIGHWAY
	WEBB		0018	05	062, ETC	IH 35

DISCLAIMER:
The use of this standard is governed by the "Texas Engineering Practice Act". No warranty of any kind is made by TxDOT for any purpose whatsoever. TxDOT assumes no responsibility for the conversion of this standard to other formats or for incorrect results or damages resulting from its use.

LEVELS DISPLAYED
1 2 3 4 5 6 7 8 9 10 11 12 13 14 15 16
17 18 19 20 21 22 23 24 25 26 27 28 29 30 31 32
33 34 35 36 37 38 39 40 41 42 43 44 45 46 47 48
49 50 51 52 53 54 55 56 57 58 59 60 61 62 63

ACC:
(LV=1,2 for English)

6/4/2003
HOUFILE023 \ncivil\ncf0130\
b34mp120.dgn-03

SUMMIT
WEBB
#25091-2

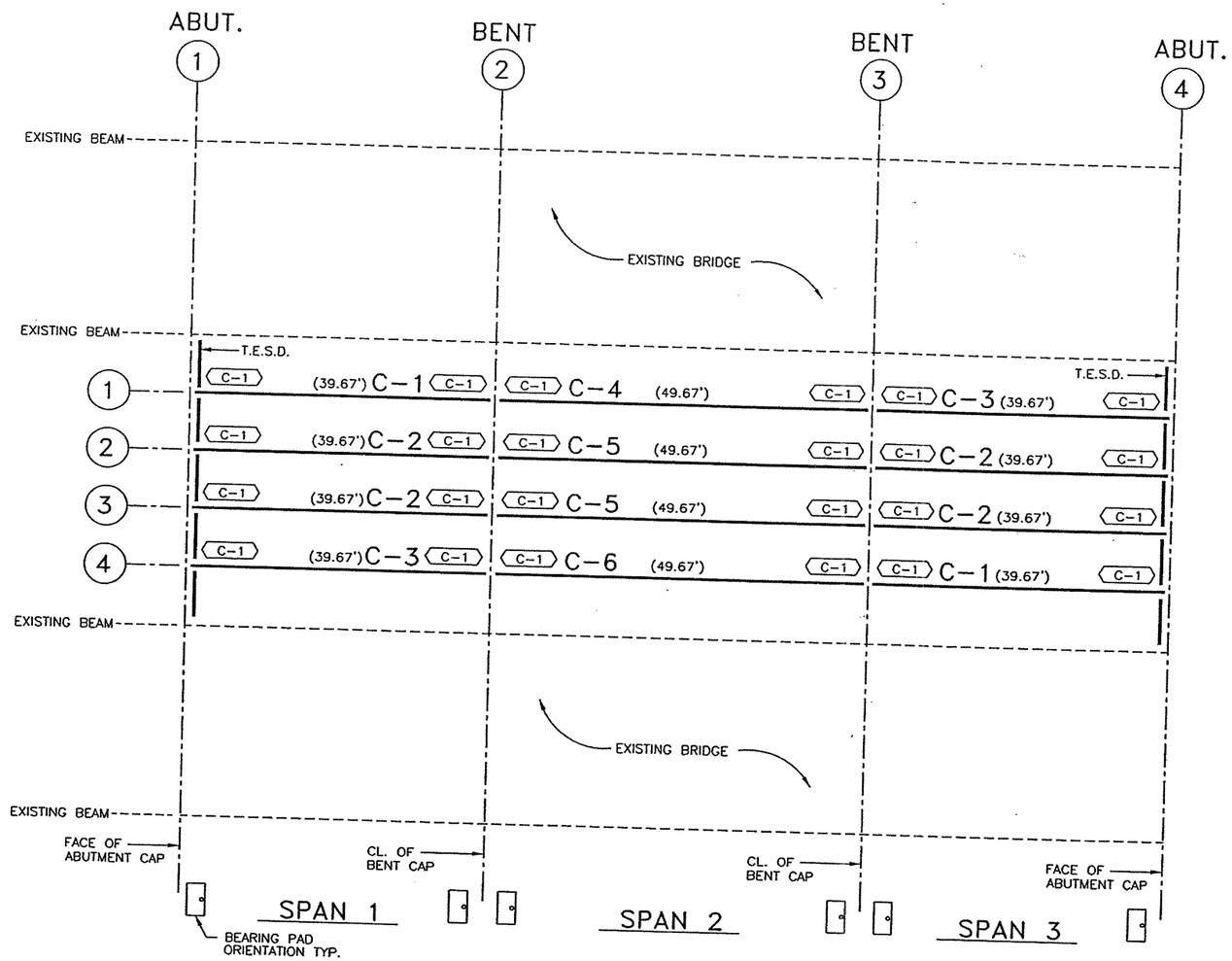

RECEIVED
MAR 18 2004
LAREDO AREA OFFICE

RECEIVED
MAR 03 2004
LAREDO AREA OFFICE

NOTES:

1) BEAM DESIGN LENGTH SHOWN IN PARENTHESES, THUS ( ) .
2) BEARING PAD MARK IS SHOWN THUS (P-XX) .
3) ANCHOR HOLES, SEE FABRICATION SHEETS FOR LOCATION.
   - ● BEAM REQUIRES ROUND ANCHOR HOLE.
   - ▬ BEAM REQUIRES SLOTTED ANCHOR HOLE.
4) CONTRACTOR TO FORM BEARING SEATS AT SKEWED REGULAR BENTS SO THAT BEAMS AND PADS DON'T HAVE TO BE BEVELED, UNLESS BEAMS CONFLICT. IF DONE OTHERWISE CONTRACTOR IS TO INFORM BEAM FABRICATOR PRIOR TO SUBMITTAL OF PLANS FOR APPROVAL.
5) ALL UNANSWERED VERIFIES ARE CONSIDERED CORRECT.
6) T.E.S.D. = THICKENED END SLAB DIAPHRAGM.

INDEX OF SHEETS

E-1 - E-8	ERECTION SHEETS
I-1	INDEX SHEET
C-1 - C-6 IV-1 - IV-22	FABRICATION SHEETS
BP-1	BEARING PAD SHEET
S-"C" S-"IV"	STANDARD SHEETS

UNIROYAL ROAD OVERPASS

N

☒ NO EXCEPTIONS
☐ EXCEPTIONS AS NOTED
☐ REJECTED - RESUBMIT

KBR

Reviewed as to general compliance with the Contract Documents. This review does not relieve the Contractor/Supplier of his responsibility for adequacy of design correctness of dimensions, and accuracy of detail.

By: [signature] Date: 3/16/04

PARTIAL SUBMITTAL NUMBER 1 OF 2

FABRICATOR: BEXAR CONCRETE WORKS I, LTD.

CONTRACTOR: SUMMIT CONTRACTING, INC.

CONTRACTOR'S OPTIONS :	SLAB FORMED BY:	END DIAPHRAGM:	INTERIOR DIAPHRAGM:
	PANELS	THICKEN SLAB	NONE

SHOP PLANS WERE PREPARED BY: BEXAR CONCRETE WORKS I, LTD.

STATE DISTRICT	FEDERAL REGION	STATE	FEDERAL AID PROJECT NO.			
LAREDO	6	TEXAS	NH-2002 (79)			
COUNTY			CONTROL	SECTION	JOB	HIGHWAY
WEBB			0018	05	062,ETC.	IH 35

JOB. NO.	DRAWN BY	CHECKED BY	DATE OUT	SHEET NO.
2509	MJR	JDH	02-20-04	E-1

ERECTION SHEET

2509E1.DWG

SHEET NO. 670 A

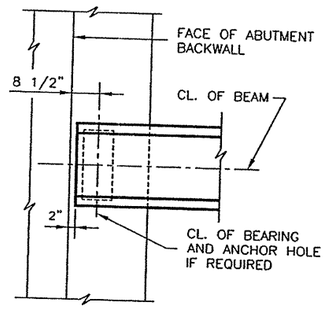

PLAN AT ABUTMENT 1
(ABUTMENT 4 SIMILAR)

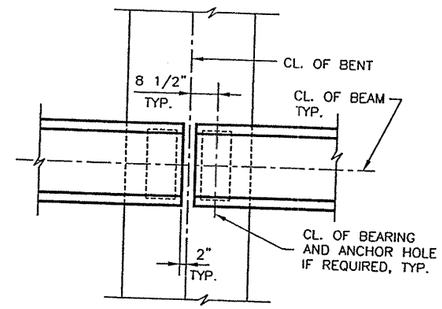

PLAN AT BENTS 2 & 3

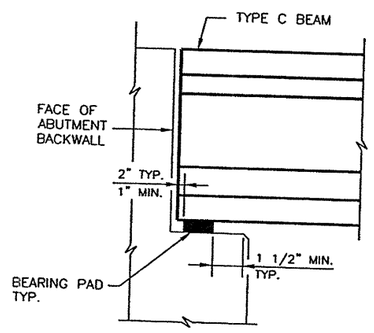

ELEVATION AT ABUTMENT 1
(ABUTMENT 4 SIMILAR)

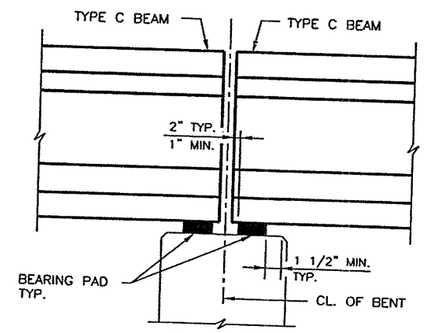

ELEVATION AT BENTS 2 & 3

X NO EXCEPTIONS
☐ EXCEPTIONS AS NOTED
☐ REJECTED - RESUBMIT
KBR
Reviewed as to general compliance with the Contract Documents. This review does not relieve the Contractor/Supplier of his responsibility for adequacy of design correctness of dimensions, and accuracy of detail.
By: [signature] Date: 3/16/04

UNIROYAL ROAD
OVERPASS

NOTES:

1) CONTRACTOR TO FORM BEARING SEATS AT SKEWED REGULAR BENTS SO THAT BEAMS AND PADS DON'T HAVE TO BE BEVELED, UNLESS BEAMS CONFLICT. IF DONE OTHERWISE CONTRACTOR IS TO INFORM BEAM FABRICATOR PRIOR TO SUBMITTAL OF PLANS FOR APPROVAL.
2) ALL UNANSWERED VERIFIES ARE CONSIDERED CORRECT.
3) PAD LOCATION PROVIDED WAS BASED ON CONTRACT PLANS "ELASTOMERIC BEARING AND BEAM END DETAILS" SHEET.

2509E2.DWG

FABRICATOR: BEXAR CONCRETE WORKS I, LTD.				
CONTRACTOR: SUMMIT CONTRACTING, INC.				
CONTRACTOR'S OPTIONS :	SLAB FORMED BY:	END DIAPHRAGM:	INTERIOR DIAPHRAGM:	
	PANELS	THICKEN SLAB	NONE	
SHOP PLANS WERE PREPARED BY: BEXAR CONCRETE WORKS I, LTD.				
STATE DISTRICT	FEDERAL REGION	STATE	FEDERAL AID PROJECT NO.	
LAREDO	6	TEXAS	NH-2002 (79)	
COUNTY		CONTROL	SECTION	JOB	HIGHWAY
WEBB		0018	05	062,ETC.	IH 35
JOB. NO.	DRAWN BY	CHECKED BY	DATE OUT	SHEET NO.
2509	MJR	JDH	02-20-04	E-2
ERECTION SHEET				

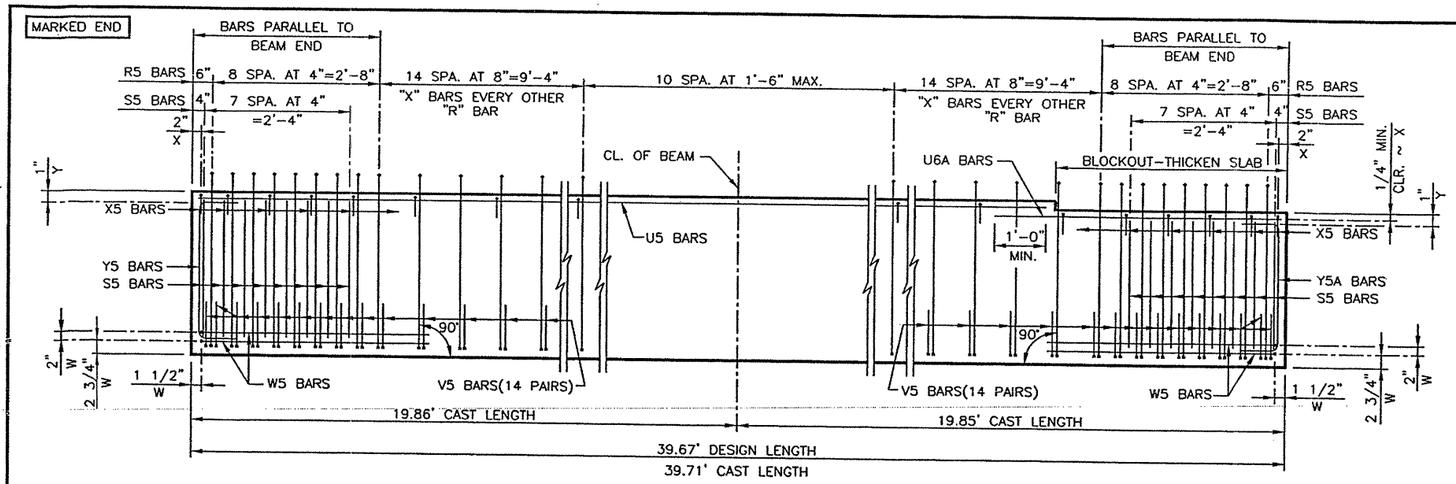

BEAM ELEVATION (REINF.)

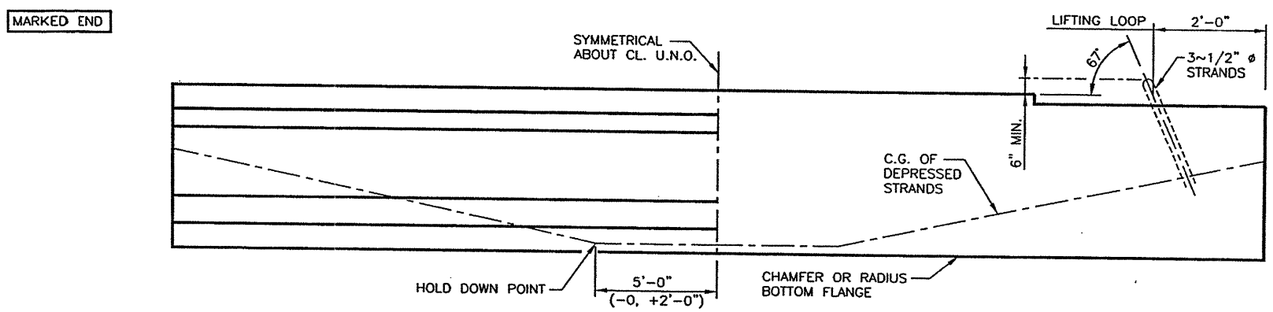

BEAM ELEVATION (MISC.)

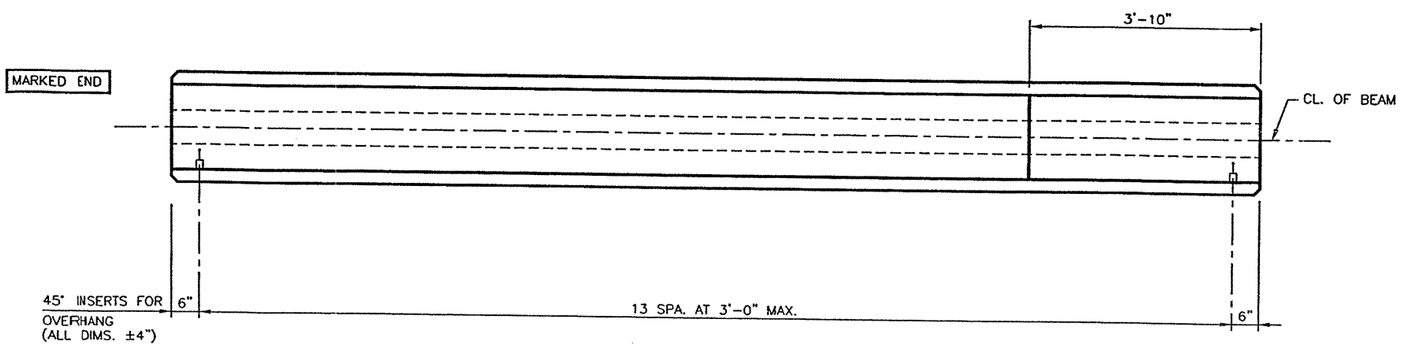

BEAM PLAN

REINFORCING STEEL TABLE

BAR MARK	BAR SIZE	TOTAL QUANTITY PER BM.	TOTAL QUANTITY PER SHT.	BAR LENGTH
R5	#4	55	110	SEE SHT. S-"C"
S5	#5	32	64	SEE SHT. S-"C"
U5	#5	2	4	35'-8"
U6A	#5	2	4	6'-6"
V5	#4	56	112	SEE SHT. S-"C"
W5	#5	4	8	SEE SHT. S-"C"
X5	#3	35	70	SEE SHT. S-"C"
Y5	#6	2	4	SEE SHT. S-"C"
Y5A	#6	2	4	SEE SHT. S-"C"

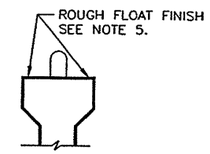

BEAM FINISH

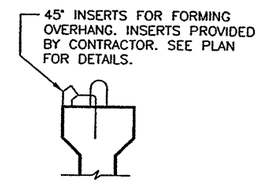

TOP FLANGE INSERTS
(SUPPLIED BY CONTRACTOR)

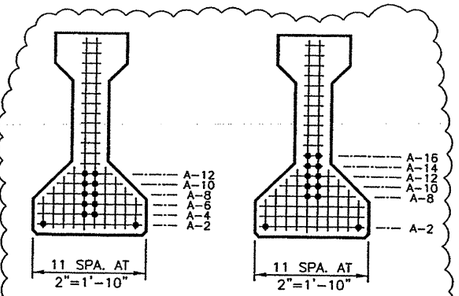

CL. SECTION END SECTION

LO-LAX STRAND PATTERN

DESIGN REF. NO.	: SHEET 626 REV.
TOTAL STRAND QUANTITY	: 12
STRAND SIZE AND TYPE :	1/2" ø 270 ksi TO 31.0k
ECCENTRICITY AT CL. (IN.)	: 10.09
ECCENTRICITY AT END (IN.)	: 6.76
DEPRESSED QUANTITY AND LOC. (IN.)	: 10 AT A-16
RELEASE STRENGTH (PSI)	: 4000
MIN. 28 DAY STRENGTH (PSI)	: 5000
APPROX. UPLIFT FORCE (kips)	: 12.06

NOTES:

1) ALL UNANSWERED VERIFIES ARE CONSIDERED CORRECT.
2) ALL DIMENSIONS PERTAINING TO STRANDS AND REINFORCING BARS WILL BE CENTER TO CENTER.
3) FOR ALL DIMENSIONS AND DETAILS NOT SHOWN SEE STANDARD SHEET S-"C".
4) CONTRACTOR TO CUT LIFTING LOOPS TO 2" AFTER ERECTION.
5) ALL BEAMS SHALL HAVE A ROUGH FLOATED FINISH AS SPECIFIED IN TxDOT'S "TEXAS STANDARD SPECIFICATIONS" ITEM 424.4.5.o.
6) ON BRIDGE, BEAMS TO BE PLACED AS MARKS ARE SHOW ON ERECTION SHEETS. ON FABRICATION SHEETS, BEAMS ARE DETAILED WITH MARKS ON LEFT SIDE.

X NO EXCEPTIONS
☐ EXCEPTIONS AS NOTED
☐ REJECTED - RESUBMIT
KBR
Reviewed as to general compliance with the Contract Documents. This review does not relieve the Contractor/Supplier of his responsibility for adequacy of design correctness of dimensions, and accuracy of detail.
By: Gilbert Date: 3/16/04

TOTAL QUANTITY OF 45° INSERTS FOR OVERHANG, SUPPLIED BY CONTRACTOR, ON THIS SHEET = 28

BEAM TYPE = "C"
BEAM MARK = C-1
TOTAL BEAMS ON THIS SHEET = 2
TOTAL LINEAR FOOTAGE THIS SHEET = 79.34'

FABRICATOR: BEXAR CONCRETE WORKS I, LTD.

CONTRACTOR: SUMMIT CONTRACTING, INC.

SHOP PLANS WERE PREPARED BY: BEXAR CONCRETE WORKS I, LTD.

STATE DISTRICT	FEDERAL REGION	STATE	FEDERAL AID PROJECT NO.			
LAREDO	6	TEXAS	NH-2002 (79)			
COUNTY			CONTROL	SECTION	JOB	HIGHWAY
WEBB			0018	05	062,ETC.	IH 35
JOB. NO.	DRAWN BY	CHECKED BY	DATE OUT	SHEET NO.		
2509	MJR	JDH	02-20-04	C-1		

FABRICATION SHEET

1 REVISED: 02-27-04 DESIGN

2509C1.DWG

SHEET NO. 670C

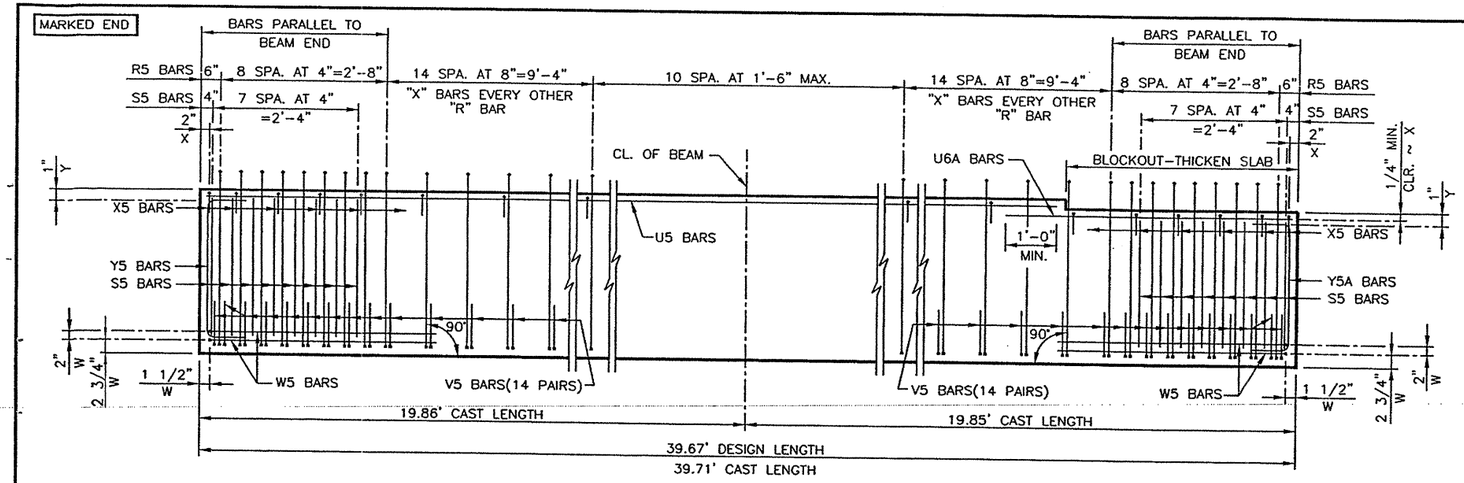

BEAM ELEVATION (REINF.)

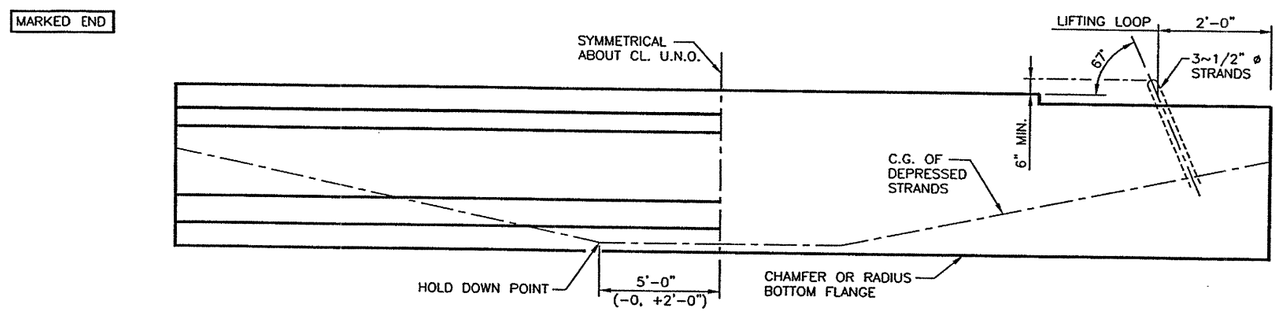

BEAM ELEVATION (MISC.)

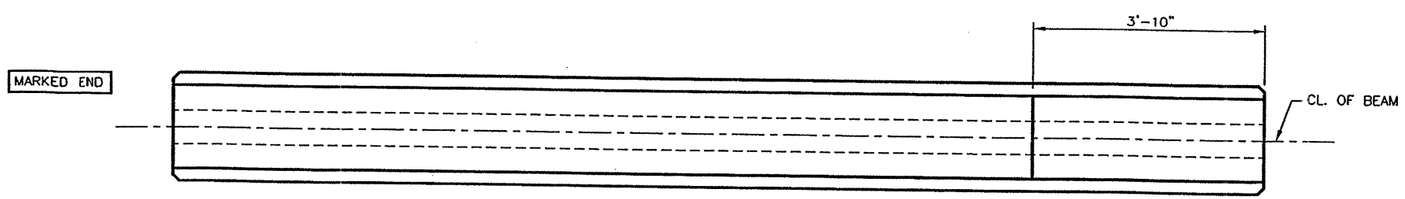

NO SKEW

BEAM PLAN

NO SKEW

REINFORCING STEEL TABLE				
BAR MARK	BAR SIZE	TOTAL QUANTITY PER BM.	TOTAL QUANTITY PER SHT.	BAR LENGTH
R5	#4	55	220	SEE SHT. S-"C"
S5	#5	32	128	SEE SHT. S-"C"
U5	#5	2	8	35'-8"
U6A	#5	2	8	6'-6"
V5	#4	56	224	SEE SHT. S-"C"
W5	#5	4	16	SEE SHT. S-"C"
X5	#3	35	140	SEE SHT. S-"C"
Y5	#6	2	8	SEE SHT. S-"C"
Y5A	#6	2	8	SEE SHT. S-"C"

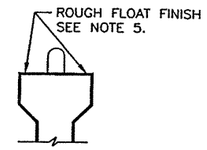

BEAM FINISH

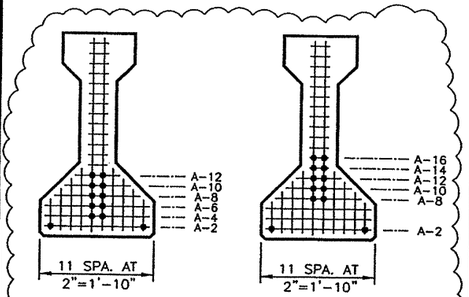

CL. SECTION END SECTION

LO-LAX STRAND PATTERN	
DESIGN REF. NO.	: SHEET 626 REV.
TOTAL STRAND QUANTITY	: 12
STRAND SIZE AND TYPE : 1/2" ø 270 ksi TO 31.0k	
ECCENTRICITY AT CL. (IN.)	: 10.09
ECCENTRICITY AT END (IN.)	: 6.76
DEPRESSED QUANTITY AND LOC. (IN.)	: 10 AT A-16
RELEASE STRENGTH (PSI)	: 4000
MIN. 28 DAY STRENGTH (PSI)	: 5000
APPROX. UPLIFT FORCE (kips)	: 12.06

NOTES:

1) ALL UNANSWERED VERIFIES ARE CONSIDERED CORRECT.
2) ALL DIMENSIONS PERTAINING TO STRANDS AND REINFORCING BARS WILL BE CENTER TO CENTER.
3) FOR ALL DIMENSIONS AND DETAILS NOT SHOWN SEE STANDARD SHEET S-"C".
4) CONTRACTOR TO CUT LIFTING LOOPS TO 2" AFTER ERECTION.
5) ALL BEAMS SHALL HAVE A ROUGH FLOATED FINISH AS SPECIFIED IN TxDOT'S "TEXAS STANDARD SPECIFICATIONS" ITEM 424.4.5.a.
6) ON BRIDGE, BEAMS TO BE PLACED AS MARKS ARE SHOW ON ERECTION SHEETS. ON FABRICATION SHEETS, BEAMS ARE DETAILED WITH MARKS ON LEFT SIDE.

1 REVISED: 02-27-04 DESIGN

2509C2.DWG

BEAM TYPE = "C"
BEAM MARK = C-2
TOTAL BEAMS ON THIS SHEET = 4
TOTAL LINEAR FOOTAGE THIS SHEET = 158.68'

FABRICATOR: BEXAR CONCRETE WORKS I, LTD.

CONTRACTOR: SUMMIT CONTRACTING, INC.

SHOP PLANS WERE PREPARED BY: BEXAR CONCRETE WORKS I, LTD.

STATE DISTRICT	FEDERAL REGION	STATE	FEDERAL AID PROJECT NO.			
LAREDO	6	TEXAS	NH-2002 (79)			
COUNTY			CONTROL	SECTION	JOB	HIGHWAY
WEBB			0018	05	062,ETC.	IH 35

JOB. NO.	DRAWN BY	CHECKED BY	DATE OUT	SHEET NO.
2509	MJR	JDH	02-20-04	C-2

FABRICATION SHEET

SHEET NO. 670D

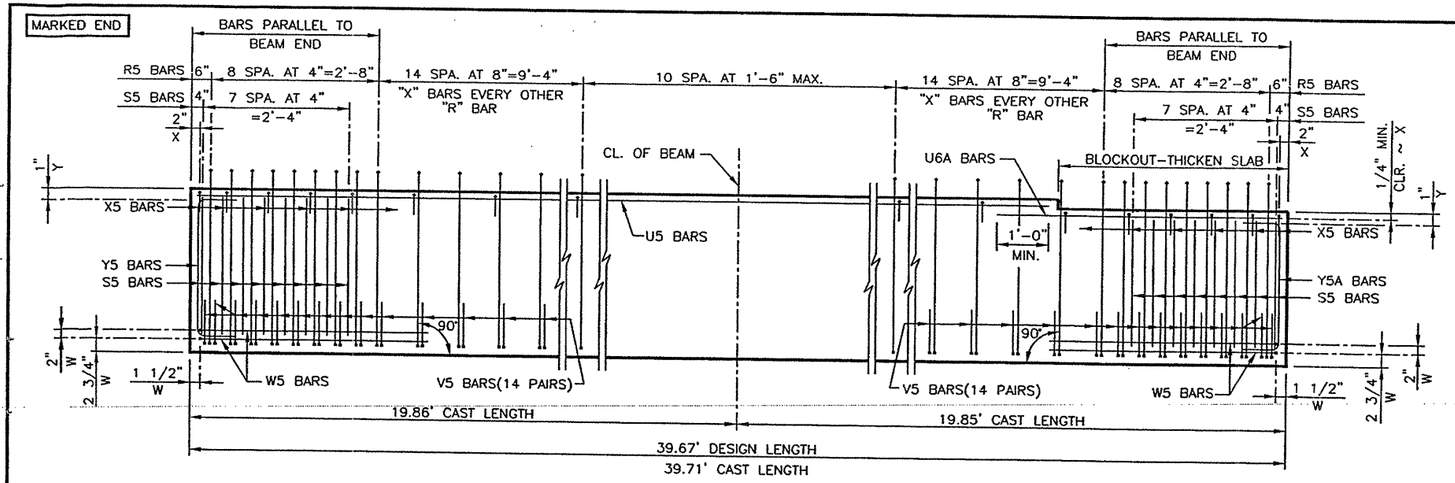

BEAM ELEVATION (REINF.)

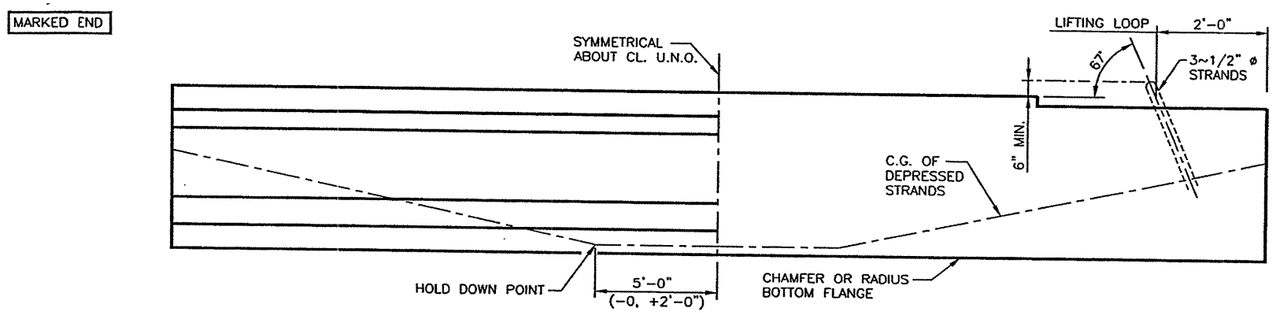

BEAM ELEVATION (MISC.)

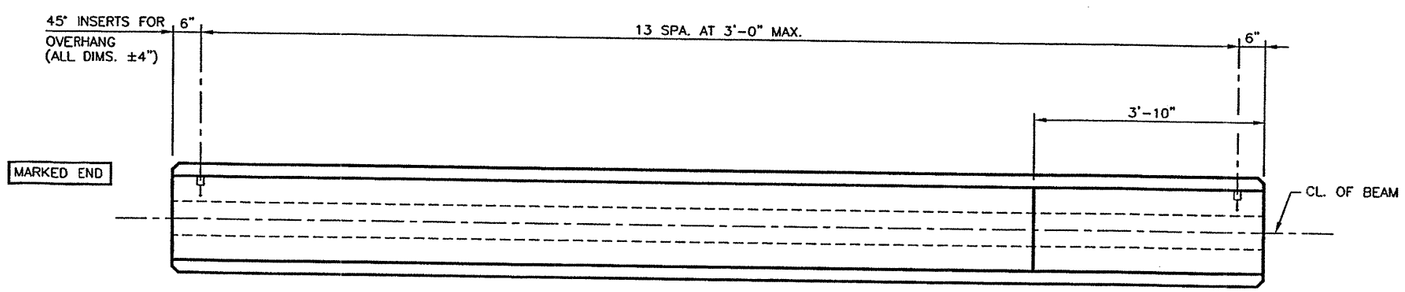

NO SKEW

BEAM PLAN

NO SKEW

REINFORCING STEEL TABLE

BAR MARK	BAR SIZE	TOTAL QUANTITY PER BM.	TOTAL QUANTITY PER SHT.	BAR LENGTH
R5	#4	55	110	SEE SHT. S-"C"
S5	#5	32	64	SEE SHT. S-"C"
U5	#5	2	4	35'-8"
U6A	#5	2	4	6'-6"
V5	#4	56	112	SEE SHT. S-"C"
W5	#5	4	8	SEE SHT. S-"C"
X5	#3	35	70	SEE SHT. S-"C"
Y5	#6	2	4	SEE SHT. S-"C"
Y5A	#6	2	4	SEE SHT. S-"C"

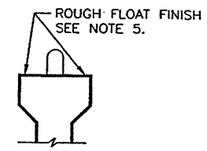

BEAM FINISH

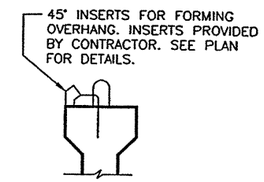

TOP FLANGE INSERTS
(SUPPLIED BY CONTRACTOR)

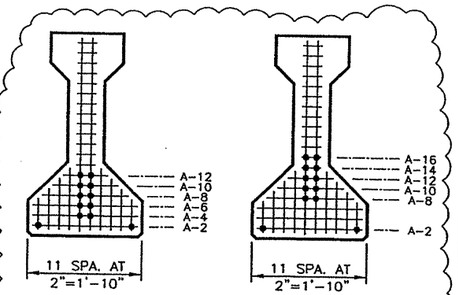

CL. SECTION END SECTION

LO-LAX STRAND PATTERN

DESIGN REF. NO.	: SHEET 626 REV.
TOTAL STRAND QUANTITY	: 12
STRAND SIZE AND TYPE : 1/2" ø 270 ksi TO 31.0k	
ECCENTRICITY AT CL. (IN.)	: 10.09
ECCENTRICITY AT END (IN.)	: 6.76
DEPRESSED QUANTITY AND LOC. (IN.)	: 10 AT A-16
RELEASE STRENGTH (PSI)	: 4000
MIN. 28 DAY STRENGTH (PSI)	: 5000
APPROX. UPLIFT FORCE (kips)	: 12.06

NOTES:

1) ALL UNANSWERED VERIFIES ARE CONSIDERED CORRECT.
2) ALL DIMENSIONS PERTAINING TO STRANDS AND REINFORCING BARS WILL BE CENTER TO CENTER.
3) FOR ALL DIMENSIONS AND DETAILS NOT SHOWN SEE STANDARD SHEET S-"C".
4) CONTRACTOR TO CUT LIFTING LOOPS TO 2" AFTER ERECTION.
5) ALL BEAMS SHALL HAVE A ROUGH FLOATED FINISH AS SPECIFIED IN TxDOT'S "TEXAS STANDARD SPECIFICATIONS" ITEM 424.4.5.a.
6) ON BRIDGE, BEAMS TO BE PLACED AS MARKS ARE SHOW ON ERECTION SHEETS. ON FABRICATION SHEETS, BEAMS ARE DETAILED WITH MARKS ON LEFT SIDE.

TOTAL QUANTITY OF 45° INSERTS FOR OVERHANG, SUPPLIED BY CONTRACTOR, ON THIS SHEET = 28

BEAM TYPE = "C"
BEAM MARK = C-3
TOTAL BEAMS ON THIS SHEET = 2
TOTAL LINEAR FOOTAGE THIS SHEET = 79.34'

FABRICATOR: BEXAR CONCRETE WORKS I, LTD.

CONTRACTOR: SUMMIT CONTRACTING, INC.

SHOP PLANS WERE PREPARED BY: BEXAR CONCRETE WORKS I, LTD.

STATE DISTRICT	FEDERAL REGION	STATE	FEDERAL AID PROJECT NO.			
LAREDO	6	TEXAS	NH-2002 (79)			
COUNTY			CONTROL	SECTION	JOB	HIGHWAY
WEBB			0018	05	062,ETC.	IH 35

JOB. NO.	DRAWN BY	CHECKED BY	DATE OUT	SHEET NO.
2509	MJR	JDH	02-20-04	C-3

FABRICATION SHEET

1 REVISED: 02-27-04 DESIGN

2509C3.DWG

SHEET NO. 670 E

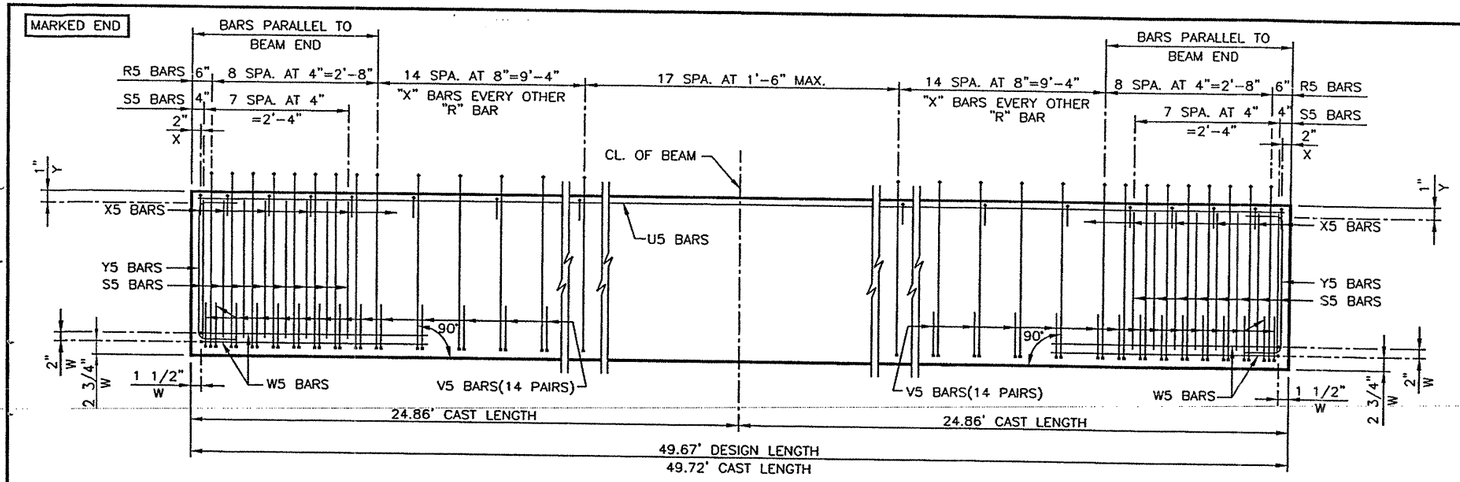

BEAM ELEVATION (REINF.)

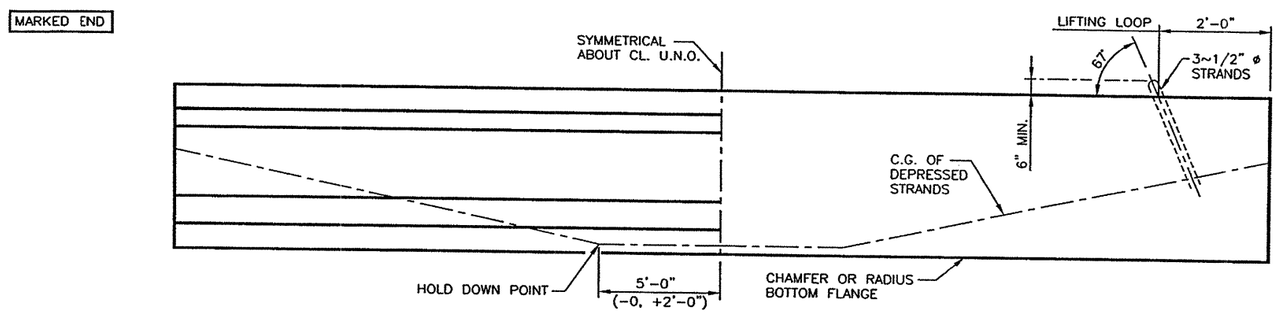

BEAM ELEVATION (MISC.)

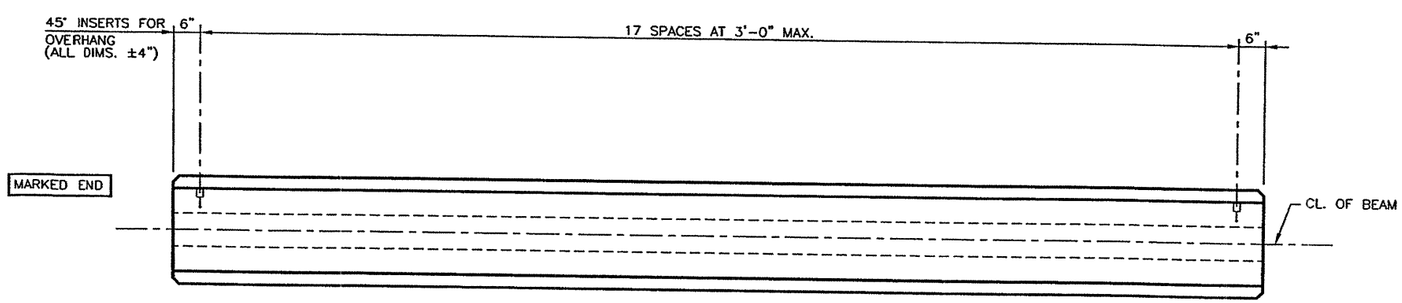

BEAM PLAN

NO SKEW

NO SKEW

REINFORCING STEEL TABLE

BAR MARK	BAR SIZE	TOTAL QUANTITY PER BM.	TOTAL QUANTITY PER SHT.	BAR LENGTH
R5	#4	62	62	SEE SHT. S-"C"
S5	#5	32	32	SEE SHT. S-"C"
U5	#5	2	2	49'-6"
V5	#4	56	56	SEE SHT. S-"C"
W5	#5	4	4	SEE SHT. S-"C"
X5	#3	42	42	SEE SHT. S-"C"
Y5	#6	4	4	SEE SHT. S-"C"

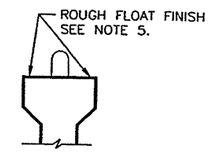

BEAM FINISH

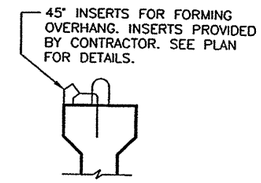

TOP FLANGE INSERTS
(SUPPLIED BY CONTRACTOR)

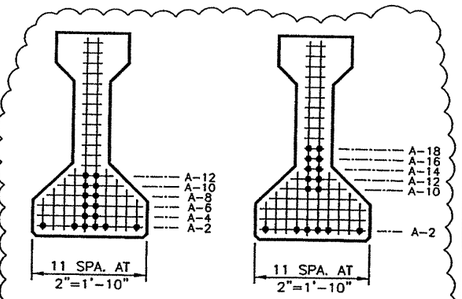

CL. SECTION END SECTION

LO-LAX STRAND PATTERN

DESIGN REF. NO.	: SHEET 626 REV.
TOTAL STRAND QUANTITY	: 16
STRAND SIZE AND TYPE	: 1/2" ø 270 ksi TO 31.0k
ECCENTRICITY AT CL. (IN.)	: 11.34
ECCENTRICITY AT END (IN.)	: 7.59
DEPRESSED QUANTITY AND LOC. (IN.)	: 10 AT A-18
RELEASE STRENGTH (PSI)	: 4000
MIN. 28 DAY STRENGTH (PSI)	: 5000
APPROX. UPLIFT FORCE (kips)	: 11.57

NOTES:

1) ALL UNANSWERED VERIFIES ARE CONSIDERED CORRECT.
2) ALL DIMENSIONS PERTAINING TO STRANDS AND REINFORCING BARS WILL BE CENTER TO CENTER.
3) FOR ALL DIMENSIONS AND DETAILS NOT SHOWN SEE STANDARD SHEET S-"C".
4) CONTRACTOR TO CUT LIFTING LOOPS TO 2" AFTER ERECTION.
5) ALL BEAMS SHALL HAVE A ROUGH FLOATED FINISH AS SPECIFIED IN TxDOT'S "TEXAS STANDARD SPECIFICATIONS" ITEM 424.4.5.a.
6) ON BRIDGE, BEAMS TO BE PLACED AS MARKS ARE SHOW ON ERECTION SHEETS. ON FABRICATION SHEETS, BEAMS ARE DETAILED WITH MARKS ON LEFT SIDE.

TOTAL QUANTITY OF 45° INSERTS FOR OVERHANG, SUPPLIED BY CONTRACTOR, ON THIS SHEET = 18

BEAM TYPE = "C"
BEAM MARK = C-4
TOTAL BEAMS ON THIS SHEET = 1
TOTAL LINEAR FOOTAGE THIS SHEET = 49.67'

FABRICATOR: BEXAR CONCRETE WORKS I, LTD.

CONTRACTOR: SUMMIT CONTRACTING, INC.

SHOP PLANS WERE PREPARED BY: BEXAR CONCRETE WORKS I, LTD.

STATE DISTRICT	FEDERAL REGION	STATE	FEDERAL AID PROJECT NO.			
LAREDO	6	TEXAS	NH-2002 (79)			
COUNTY			CONTROL	SECTION	JOB	HIGHWAY
WEBB			0018	05	062,ETC.	IH 35
JOB. NO.	DRAWN BY		CHECKED BY	DATE OUT		SHEET NO.
2509	MJR		JDH	02-20-04		C-4

FABRICATION SHEET

1 REVISED: 02-27-04 DESIGN

2509C4.DWG

SHEET NO. 6 OF

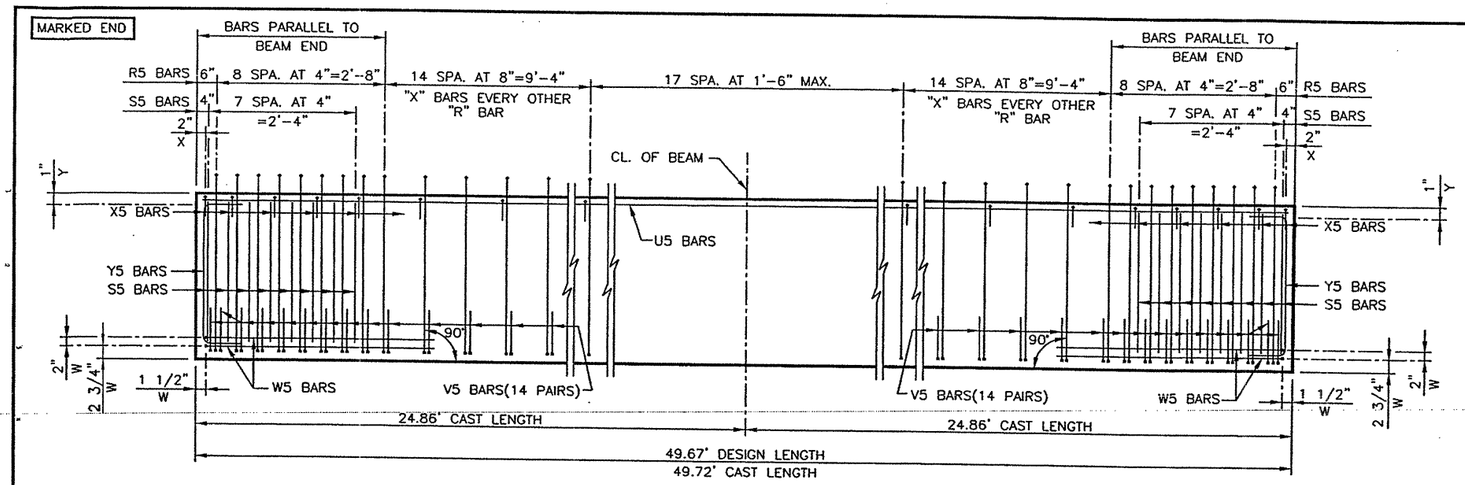

BEAM ELEVATION (REINF.)

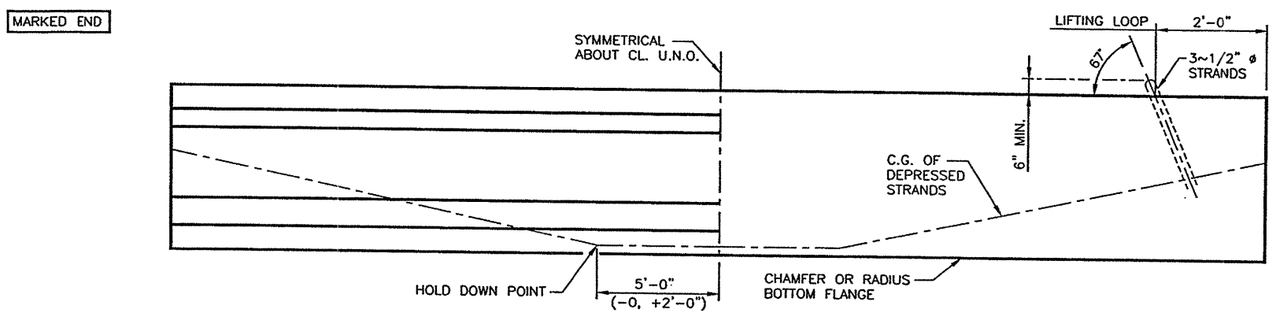

BEAM ELEVATION (MISC.)

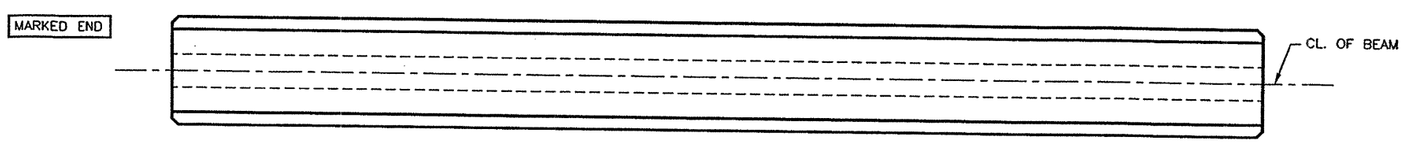

NO SKEW

BEAM PLAN

NO SKEW

REINFORCING STEEL TABLE				
BAR MARK	BAR SIZE	TOTAL QUANTITY PER BM.	TOTAL QUANTITY PER SHT.	BAR LENGTH
R5	#4	62	124	SEE SHT. S-"C"
S5	#5	32	64	SEE SHT. S-"C"
U5	#5	2	4	49'-6"
V5	#4	56	112	SEE SHT. S-"C"
W5	#5	4	8	SEE SHT. S-"C"
X5	#3	42	84	SEE SHT. S-"C"
Y5	#6	4	8	SEE SHT. S-"C"

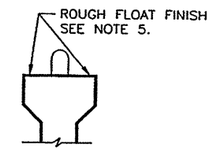

BEAM FINISH

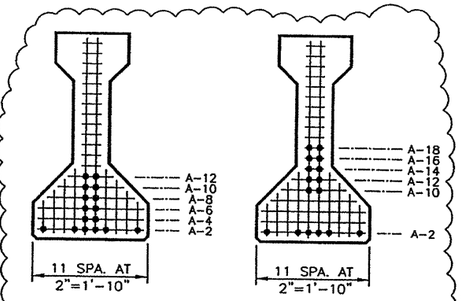

CL. SECTION END SECTION

LO-LAX STRAND PATTERN	
DESIGN REF. NO.	: SHEET 626 REV.
TOTAL STRAND QUANTITY	: 16
STRAND SIZE AND TYPE : 1/2" ø 270 ksi TO 31.0k	
ECCENTRICITY AT CL. (IN.)	: 11.34
ECCENTRICITY AT END (IN.)	: 7.59
DEPRESSED QUANTITY AND LOC. (IN.)	: 10 AT A-18
RELEASE STRENGTH (PSI)	: 4000
MIN. 28 DAY STRENGTH (PSI)	: 5000
APPROX. UPLIFT FORCE (kips)	: 11.57

NOTES:

1) ALL UNANSWERED VERIFIES ARE CONSIDERED CORRECT.
2) ALL DIMENSIONS PERTAINING TO STRANDS AND REINFORCING BARS WILL BE CENTER TO CENTER.
3) FOR ALL DIMENSIONS AND DETAILS NOT SHOWN SEE STANDARD SHEET S-"C".
4) CONTRACTOR TO CUT LIFTING LOOPS TO 2" AFTER ERECTION.
5) ALL BEAMS SHALL HAVE A ROUGH FLOATED FINISH AS SPECIFIED IN TxDOT'S "TEXAS STANDARD SPECIFICATIONS" ITEM 424.4.5.a.
6) ON BRIDGE, BEAMS TO BE PLACED AS MARKS ARE SHOW ON ERECTION SHEETS. ON FABRICATION SHEETS, BEAMS ARE DETAILED WITH MARKS ON LEFT SIDE.

1 REVISED: 02-27-04 DESIGN

2509C5.DWG

BEAM TYPE = "C"
BEAM MARK = C-5
TOTAL BEAMS ON THIS SHEET = 2
TOTAL LINEAR FOOTAGE THIS SHEET = 99.34'

FABRICATOR: BEXAR CONCRETE WORKS I, LTD.

CONTRACTOR: SUMMIT CONTRACTING, INC.

SHOP PLANS WERE PREPARED BY: BEXAR CONCRETE WORKS I, LTD.

STATE DISTRICT	FEDERAL REGION	STATE	FEDERAL AID PROJECT NO.
LAREDO	6	TEXAS	NH-2002 (79)

COUNTY	CONTROL	SECTION	JOB	HIGHWAY
WEBB	0018	05	062,ETC.	IH 35

JOB. NO.	DRAWN BY	CHECKED BY	DATE OUT	SHEET NO.
2509	MJR	JDH	02-20-04	C-5

FABRICATION SHEET

SHEET NO. 670G

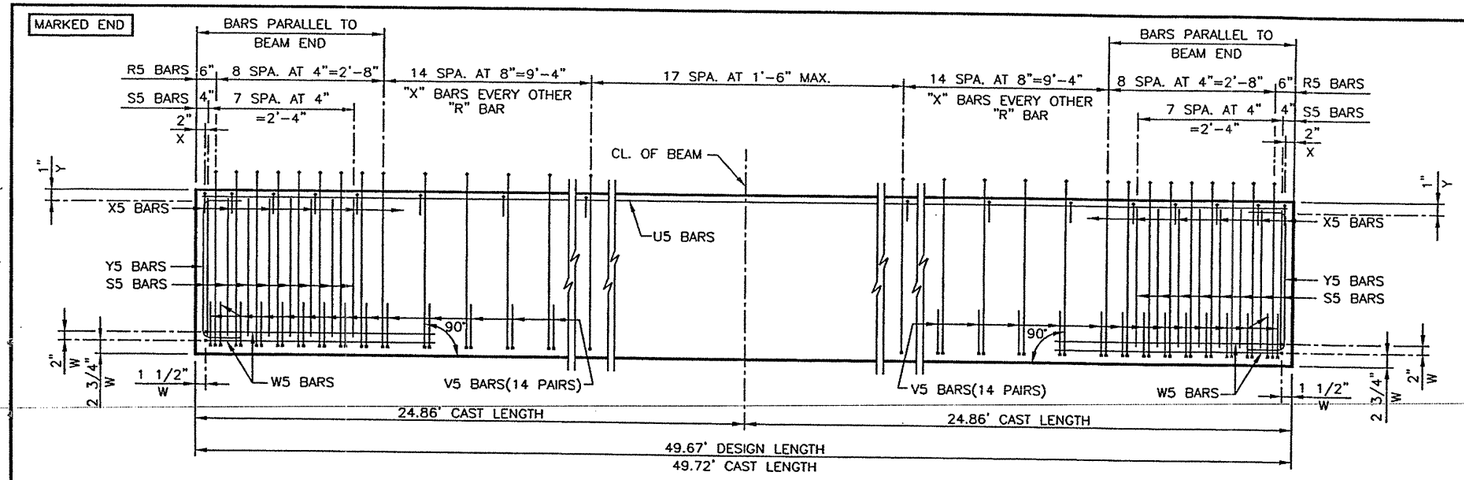

BEAM ELEVATION (REINF.)

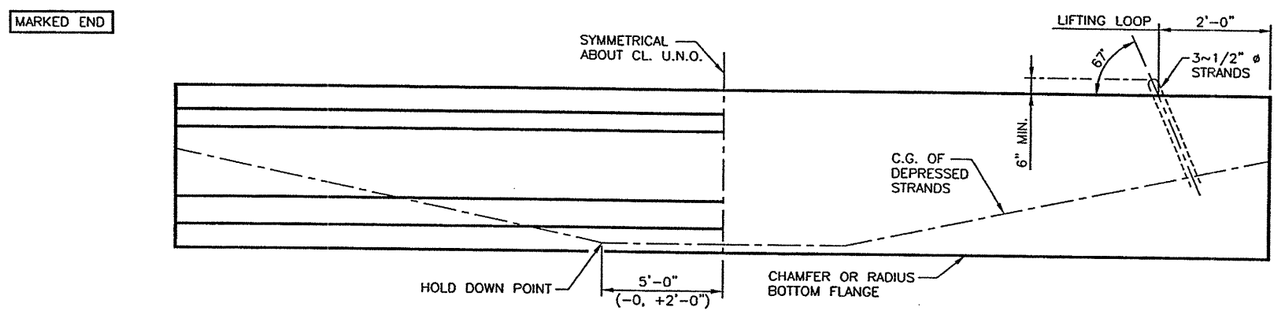

BEAM ELEVATION (MISC.)

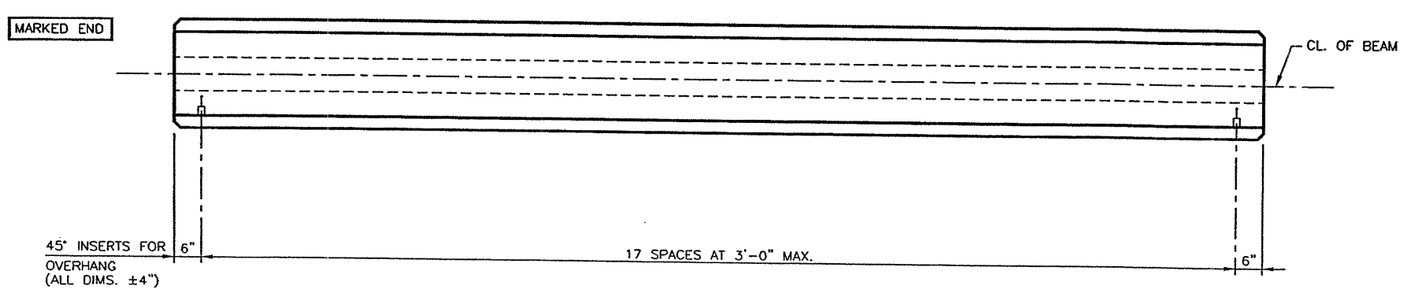

BEAM PLAN

REINFORCING STEEL TABLE				
BAR MARK	BAR SIZE	TOTAL QUANTITY PER BM.	TOTAL QUANTITY PER SHT.	BAR LENGTH
R5	#4	62	62	SEE SHT. S-"C"
S5	#5	32	32	SEE SHT. S-"C"
U5	#5	2	2	49'-6"
V5	#4	56	56	SEE SHT. S-"C"
W5	#5	4	4	SEE SHT. S-"C"
X5	#3	42	42	SEE SHT. S-"C"
Y5	#6	4	4	SEE SHT. S-"C"

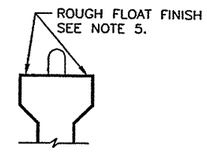

BEAM FINISH

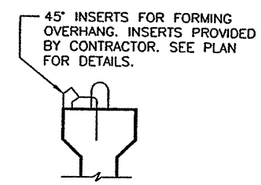

TOP FLANGE INSERTS
(SUPPLIED BY CONTRACTOR)

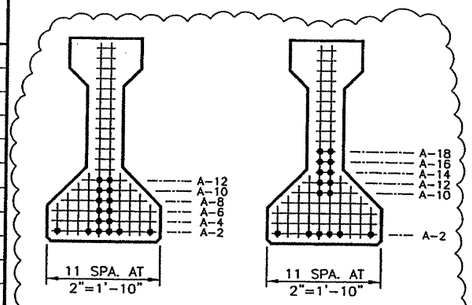

CL. SECTION END SECTION

LO-LAX STRAND PATTERN	
DESIGN REF. NO.	: SHEET 626 REV.
TOTAL STRAND QUANTITY	: 16
STRAND SIZE AND TYPE : 1/2" ø 270 ksi TO 31.0k	
ECCENTRICITY AT CL. (IN.)	: 11.34
ECCENTRICITY AT END (IN.)	: 7.59
DEPRESSED QUANTITY AND LOC. (IN.)	: 10 AT A-18
RELEASE STRENGTH (PSI)	: 4000
MIN. 28 DAY STRENGTH (PSI)	: 5000
APPROX. UPLIFT FORCE (kips)	: 11.57

NOTES:

1) ALL UNANSWERED VERIFIES ARE CONSIDERED CORRECT.
2) ALL DIMENSIONS PERTAINING TO STRANDS AND REINFORCING BARS WILL BE CENTER TO CENTER.
3) FOR ALL DIMENSIONS AND DETAILS NOT SHOWN SEE STANDARD SHEET S-"C".
4) CONTRACTOR TO CUT LIFTING LOOPS TO 2" AFTER ERECTION.
5) ALL BEAMS SHALL HAVE A ROUGH FLOATED FINISH AS SPECIFIED IN TxDOT'S "TEXAS STANDARD SPECIFICATIONS" ITEM 424.4.5.a.
6) ON BRIDGE, BEAMS TO BE PLACED AS MARKS ARE SHOW ON ERECTION SHEETS. ON FABRICATION SHEETS, BEAMS ARE DETAILED WITH MARKS ON LEFT SIDE.

TOTAL QUANTITY OF 45° INSERTS FOR OVERHANG, SUPPLIED BY CONTRACTOR, ON THIS SHEET = 18

BEAM TYPE = "C"
BEAM MARK = C-6
TOTAL BEAMS ON THIS SHEET = 1
TOTAL LINEAR FOOTAGE THIS SHEET = 49.67'

FABRICATOR: BEXAR CONCRETE WORKS I, LTD.

CONTRACTOR: SUMMIT CONTRACTING, INC.

SHOP PLANS WERE PREPARED BY: BEXAR CONCRETE WORKS I, LTD.

STATE DISTRICT	FEDERAL REGION	STATE	FEDERAL AID PROJECT NO.
LAREDO	6	TEXAS	NH-2002 (79)

COUNTY	CONTROL	SECTION	JOB	HIGHWAY
WEBB	0018	05	062,ETC.	IH 35

JOB. NO.	DRAWN BY	CHECKED BY	DATE OUT	SHEET NO.
2509	MJR	JDH	02-20-04	C-6

FABRICATION SHEET

1 REVISED: 02-27-04 DESIGN

2509C6.DWG

SHEET NO. 670 H

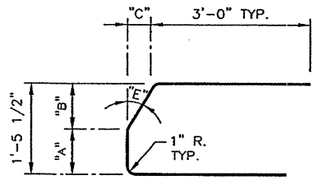

W6A – W6AG BARS
(#5)

BAR MARK NO.	"A"	"B"	"C"	SKEW ANGLE "E"
W6A	8 3/4"	8 3/4"	3/8"	2.50°
W6B	8 5/8"	8 7/8"	3/4"	5.00°
W6C	8 5/8"	8 7/8"	1 1/8"	7.50°
W6E	8 5/8"	8 7/8"	1 5/8"	10.00°
W6F	8 5/8"	8 7/8"	2"	12.50°
W6G	8 1/2"	9"	2 3/8"	15.00°
W6H	8 1/2"	9"	2 7/8"	17.50°
W6J	8 1/2"	9"	3 1/4"	20.00°
W6K	8 1/2"	9"	3 3/4"	22.50°
W6L	8 3/8"	9 1/8"	4 1/4"	25.00°
W6M	8 3/8"	9 1/8"	4 3/4"	27.50°
W6N	8 3/8"	9 1/8"	5 1/4"	30.00°
W6P	8 3/8"	9 1/8"	5 7/8"	32.50°
W6R	8 1/4"	9 1/4"	6 1/2"	35.00°
W6S	8 1/4"	9 1/4"	7 1/8"	37.50°
W6T	8 1/4"	9 1/4"	7 3/4"	40.00°
W6W	8 1/8"	9 3/8"	8 5/8"	42.50°
W6X	8 1/8"	9 3/8"	9 3/8"	45.00°
W6Y	8 1/8"	9 3/8"	10 1/4"	47.50°
W6Z	8"	9 1/2"	11 1/4"	50.00°
W6AA	8"	9 1/2"	1'-0 3/8"	52.50°
W6AB	8"	9 1/2"	1'-1 5/8"	55.00°
W6AC	7 7/8"	9 5/8"	1'-3"	57.50°
W6AE	7 7/8"	9 5/8"	1'-4 5/8"	60.00°
W6AF	7 7/8"	9 5/8"	1'-6 1/2"	62.50°
W6AG	7 3/4"	9 3/4"	1'-8 7/8"	65.00°

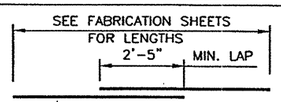

U5 BARS
(#5)

SPLICES PERMITTED AT 40'-0" C-C MIN. BETWEEN SPLICES. NO PORTION OF BAR WILL BE LESS THAN 10'-0". BAR LENGTH DOESN'T INCLUDE SPLICE.

SEE FABRICATION SHEET
FOR LENGTHS

BAR MARK NO.	LENGTH
U6A	6'-6"
U6B	7'-6"
U6C	9'-6"
U6E	12'-6"
U6F	15'-6"
U6G	18'-6"

U6A – U6G BARS
(#5)

① BEND BAR AS NEEDED AT SKEWED BEAM END.

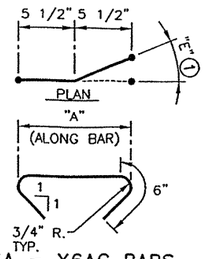

X6A – X6AG BARS
(#3)

BAR MARK NO.	"A" (ALONG BAR)	SKEW ANGLE "E"
X6A	11"	2.50°
X6B	11"	5.00°
X6C	11"	7.50°
X6E	11 1/8"	10.00°
X6F	11 1/8"	12.50°
X6G	11 1/4"	15.00°
X6H	11 1/4"	17.50°
X6J	11 3/8"	20.00°
X6K	11 1/2"	22.50°
X6L	11 5/8"	25.00°
X6M	11 3/4"	27.50°
X6N	11 7/8"	30.00°
X6P	1'-0"	32.50°
X6R	1'-0 1/4"	35.00°
X6S	1'-0 3/8"	37.50°
X6T	1'-0 5/8"	40.00°
X6W	1'-1"	42.50°
X6X	1'-1 1/4"	45.00°
X6Y	1'-1 5/8"	47.50°
X6Z	1'-2"	50.00°
X6AA	1'-2 1/2"	52.50°
X6AB	1'-3 1/8"	55.00°
X6AC	1'-3 3/4"	57.50°
X6AE	1'-4 1/2"	60.00°
X6AF	1'-5 3/8"	62.50°
X6AG	1'-6 1/2"	65.00°

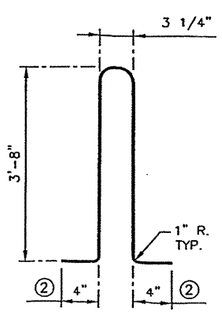

R5 BARS
(#4)

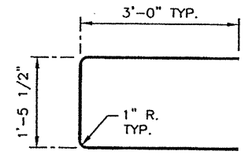

W5 BARS
(#5)

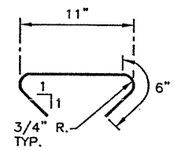

X5 BARS
(#3)

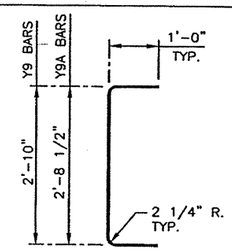

Y5 OR Y5A BARS
(#6)

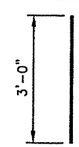

S5 BARS
(#5)

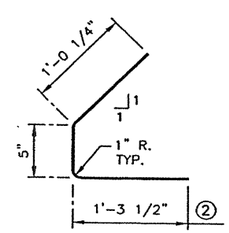

V5 BARS
(#4)

② BARS MAY BE CUT OR BENT AT SKEWED END AS REQUIRED.

③ AT FABRICATOR'S OPTION ANCHOR HOLES MAY BE SUPPLIED ON ALL BEAMS. FOR ADDITIONAL NOTES ON ANCHOR HOLES SEE CONTRACT PLANS.

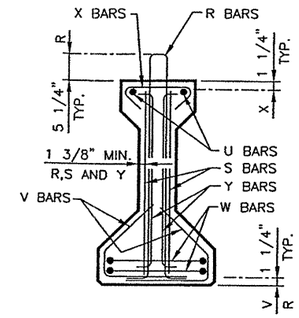

END SECTION

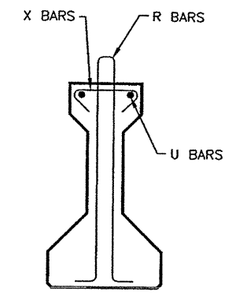

CL. SECTION

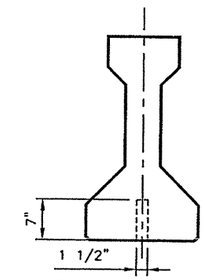

③ ANCHOR HOLE

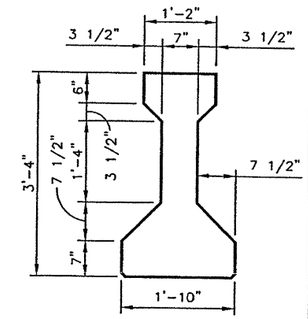

TYPE "C" BEAM

BEAM SECTION PROPERTIES
APROXIMATE WEIGHT : 516.0 LBS/FT
APROXIMATE VOLUME : 0.127 CY/FT

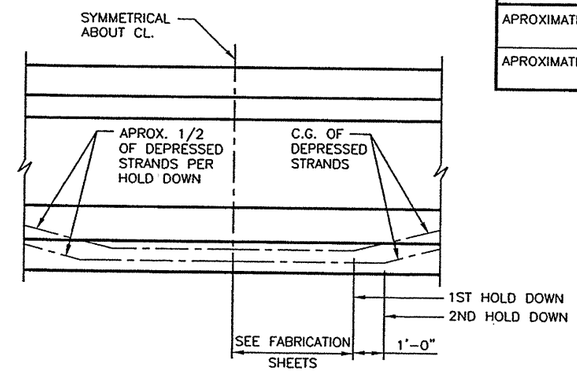

OPTIONAL HOLD DOWN POINT

AT FABRICATOR'S OPTION, OPTIONAL HOLD DOWN MAY BE USED IF UPLIFT EXCEEDS BED CAPACITY.

NOTES:

1) ALL REINFORCING STEEL SHALL BE ASTM A-615, GRADE 60.

2) ALL CONCRETE SHALL BE CLASS "H", SEE FABRICATION SHEETS FOR CONCRETE STRENGTH.

3) ALL DETAILS ON ATTACHED PLANS SHALL BE USED AS A GUIDELINE IN PLACING REINFORCING. ON SKEWED BEAMS, IN GENERAL, THE DISTANCE BETWEEN "R" AND/OR "S" BARS SHALL BE 2". THIS SPACING MAY VARY TO AVOID DOWEL HOLES OR END DIAPHRAGMS. AT SKEWED ENDS MAINTAIN REINFORCING AREA EQUIVALENT TO THAT OF SQUARE BEAMS.

4) ALL REINFORCING MAY BE TILTED OR BENT SLIGHTLY AS REQUIRED TO MAINTAIN MINIMUM CLEARANCES AS LONG AS MINIMUM STEEL REQUIREMENTS ARE MAINTAINED.

5) ALL UNANSWERED VERIFIES ARE CONSIDERED CORRECT.

6) STRANDS AND/OR REINFORCING BARS MAY BE SPREAD TO MISS OR COME IN CONTACT WITH MATERIALS USED TO FORM ANCHOR HOLES AND DIAPHRAGMS.

7) ALL DIMENSIONS PERTAINING TO STRANDS AND REINFORCING BARS WILL BE CENTER TO CENTER.

8) STRANDS AT BEAM ENDS SHALL BE CUT OFF AND TREATED AS SPECIFIED IN TxDOT'S "TEXAS STANDARD SPECIFICATIONS" ITEM 424.4.5.a.

9) ALL BEAMS SHALL HAVE A ROUGH FLOATED FINISH AS SPECIFIED IN TxDOT'S "TEXAS STANDARD SPECIFICATIONS" ITEM 424.4.5.a.

10) BOTTOM CORNERS OF ALL BEAM FLANGES AND OUTSIDE CORNERS OF EXTERIOR BEAM ENDS SHALL BE CHAMFERED 3/4" OR ROUNDED TO 1 1/2" RADIUS. AT FABRICATOR'S OPTION ALL VERTICAL EDGES MAY BE CHAMFERED.

11) ON BRIDGE, BEAMS TO BE PLACED AS MARKS ARE SHOWN ON ERECTION SHEETS. ON FABRICATION SHEETS, BEAMS ARE DETAILED WITH MARKS ON LEFT SIDE.

12) ALL DIMENSIONS MEASURED ALONG BOTTOM FLANGE CENTERLINE, UNLESS NOTED OTHERWISE.

2509SIV.DWG

STANDARDS FOR BOTH SUBMITTALS 1 AND 2

FABRICATOR: BEXAR CONCRETE WORKS I, LTD.

CONTRACTOR: SUMMIT CONTRACTING, INC.

SHOP PLANS WERE PREPARED BY: BEXAR CONCRETE WORKS I, LTD.

STATE DISTRICT	FEDERAL REGION	STATE	FEDERAL AID PROJECT NO.			
LAREDO	6	TEXAS	NH-2002 (79)			
COUNTY			CONTROL	SECTION	JOB	HIGHWAY
WEBB			0018	05	062,ETC.	IH 35

JOB. NO.	DRAWN BY	CHECKED BY	DATE OUT	SHEET NO.
2509	MJR	JDH	02-20-04	S-"C"

STANDARD BEAM DETAIL SHEET

SHEET NO. 670 I

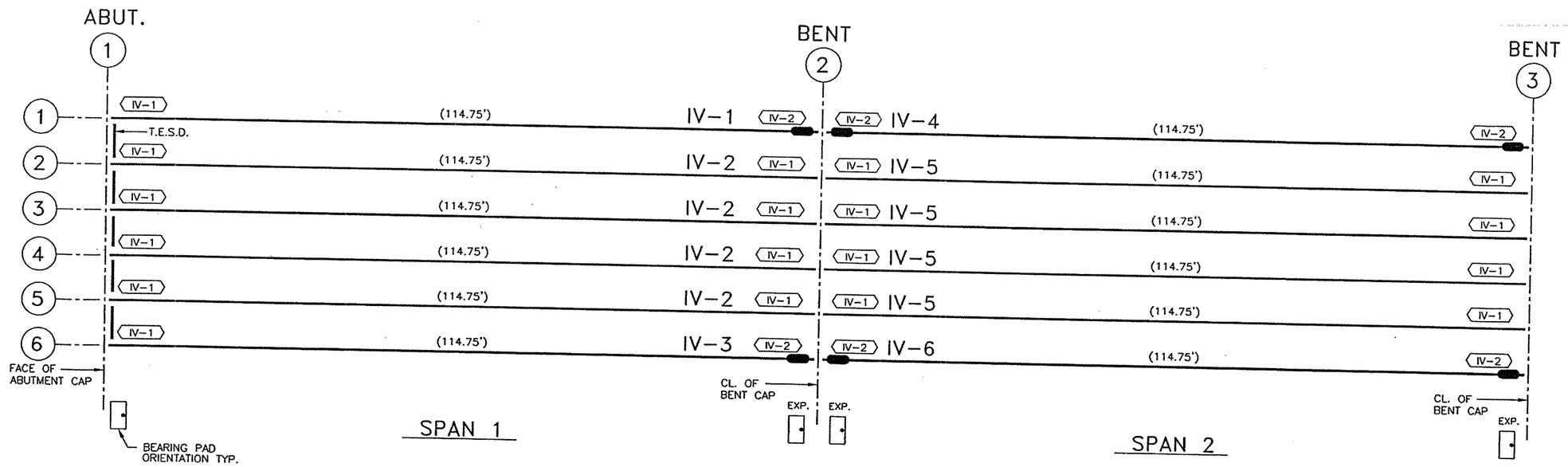

NOTES:

1) BEAM DESIGN LENGTH SHOWN IN PARENTHESES, THUS ( ) .
2) BEARING PAD MARK IS SHOWN THUS (P-XX) .
3) ANCHOR HOLES, SEE FABRICATION SHEETS FOR LOCATION.
   - ● BEAM REQUIRES ROUND ANCHOR HOLE.
   - ▬ BEAM REQUIRES SLOTTED ANCHOR HOLE.
4) CONTRACTOR TO FORM BEARING SEATS AT SKEWED REGULAR BENTS SO THAT BEAMS AND PADS DON'T HAVE TO BE BEVELED, UNLESS BEAMS CONFLICT. IF DONE OTHERWISE CONTRACTOR IS TO INFORM BEAM FABRICATOR PRIOR TO SUBMITTAL OF PLANS FOR APPROVAL.
5) ALL UNANSWERED VERIFIES ARE CONSIDERED CORRECT.
6) T.E.S.D. = THICKENED END SLAB DIAPHRAGM.

NB FRONTAGE ROAD @
TRES EQUIS BLVD.

N

☒ NO EXCEPTIONS
☐ EXCEPTIONS AS NOTED
☐ REJECTED - RESUBMIT

KBR

Reviewed as to general compliance with the Contract Documents. This review does not relieve the Contractor/Supplier of his responsibility for adequacy of design correctness of dimensions, and accuracy of detail.

By [signature] Date: 3/16/04

FABRICATOR: BEXAR CONCRETE WORKS I, LTD.					
CONTRACTOR: SUMMIT CONTRACTING, INC.					
CONTRACTOR'S OPTIONS :	SLAB FORMED BY: PANELS	END DIAPHRAGM: THICKEN SLAB	INTERIOR DIAPHRAGM: NONE		
SHOP PLANS WERE PREPARED BY: BEXAR CONCRETE WORKS I, LTD.					
STATE DISTRICT	FEDERAL REGION	STATE	FEDERAL AID PROJECT NO.		
LAREDO	6	TEXAS	NH-2002 (79)		
COUNTY		CONTROL	SECTION	JOB	HIGHWAY
WEBB		0018	05	062,ETC.	IH 35
JOB. NO.	DRAWN BY	CHECKED BY	DATE OUT	SHEET NO.	
2509	MJR	JDH	02-20-04	E-3	
ERECTION SHEET					

2509E3.DWG

SHEET NO. 670 d

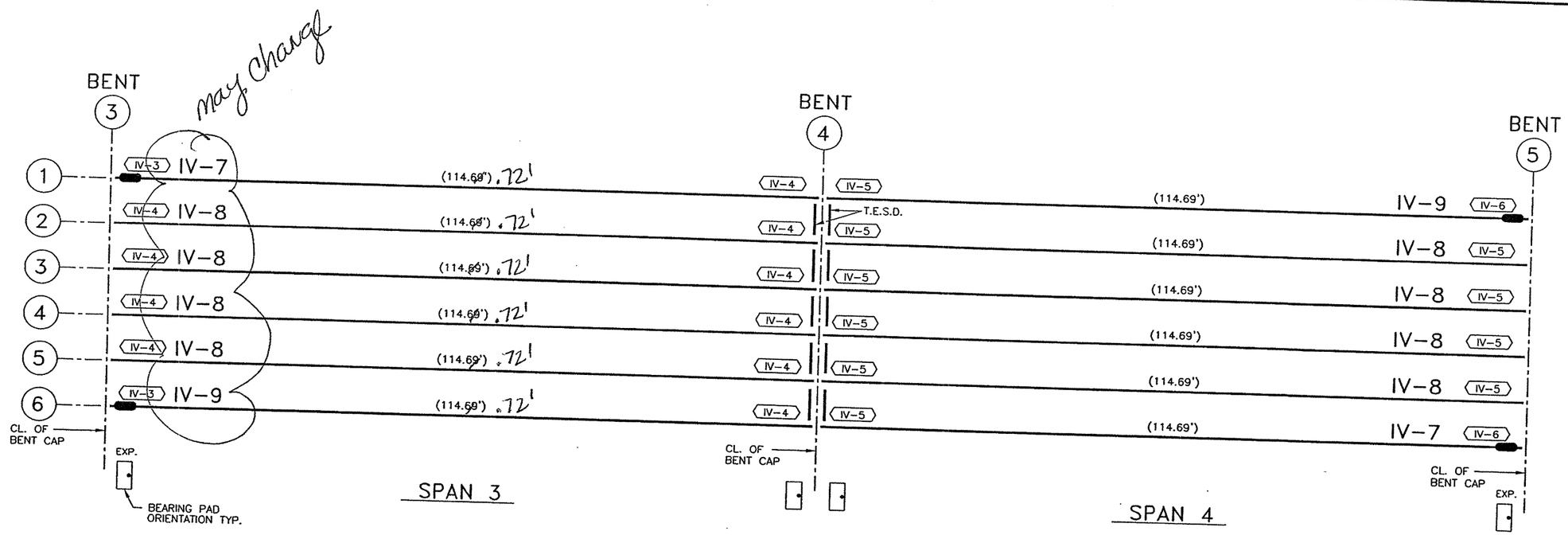

NOTES:

1) BEAM DESIGN LENGTH SHOWN IN PARENTHESES, THUS ( ) .
2) BEARING PAD MARK IS SHOWN THUS (P-XX) .
3) ANCHOR HOLES, SEE FABRICATION SHEETS FOR LOCATION.
   - ● BEAM REQUIRES ROUND ANCHOR HOLE.
   - ▬ BEAM REQUIRES SLOTTED ANCHOR HOLE.
4) CONTRACTOR TO FORM BEARING SEATS AT SKEWED REGULAR BENTS SO THAT BEAMS AND PADS DON'T HAVE TO BE BEVELED, UNLESS BEAMS CONFLICT. IF DONE OTHERWISE CONTRACTOR IS TO INFORM BEAM FABRICATOR PRIOR TO SUBMITTAL OF PLANS FOR APPROVAL.
5) ALL UNANSWERED VERIFIES ARE CONSIDERED CORRECT.
6) T.E.S.D. = THICKENED END SLAB DIAPHRAGM.

NB FRONTAGE ROAD @
TRES EQUIS BLVD.

☐ NO EXCEPTIONS
☒ EXCEPTIONS AS NOTED
☐ REJECTED - RESUBMIT
KBR
Reviewed as to general compliance with the Contract Documents. This review does not relieve the Contractor/Supplier of his responsibility for adequacy of design correctness of dimensions, and accuracy of detail.
By _____ Date: 3/16/04

FABRICATOR: BEXAR CONCRETE WORKS I, LTD.				
CONTRACTOR: SUMMIT CONTRACTING, INC.				
CONTRACTOR'S OPTIONS :	SLAB FORMED BY:	END DIAPHRAGM:	INTERIOR DIAPHRAGM:	
	PANELS	THICKEN SLAB	NONE	
SHOP PLANS WERE PREPARED BY: BEXAR CONCRETE WORKS I, LTD.				
STATE DISTRICT	FEDERAL REGION	STATE	FEDERAL AID PROJECT NO.	
LAREDO	6	TEXAS	NH-2002 (79)	
COUNTY		CONTROL	SECTION	JOB	HIGHWAY
WEBB		0018	05	062.ETC.	IH 35
JOB. NO.	DRAWN BY	CHECKED BY	DATE OUT	SHEET NO.
2509	MJR	JDH	02-20-04	E-4
ERECTION SHEET				

2509E4.DWG

SHEET NO. G70 K

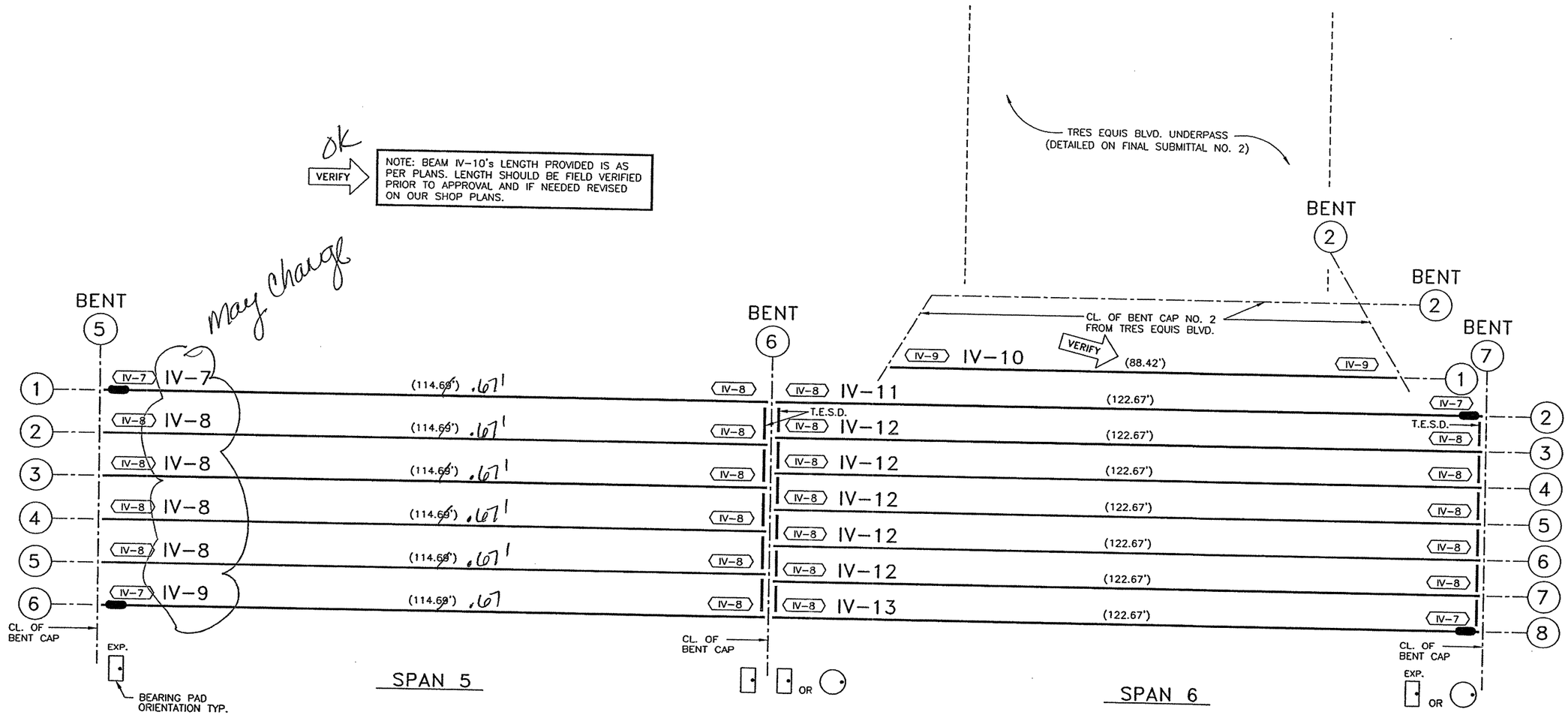

NB FRONTAGE ROAD @
TRES EQUIS BLVD.

☐ NO EXCEPTIONS
☒ EXCEPTIONS AS NOTED
☐ REJECTED - RESUBMIT

KBR

Reviewed as to general compliance with the Contract Documents. This review does not relieve the Contractor/Supplier of his responsibility for adequacy of design correctness of dimensions, and accuracy of detail.

By: [signature] Date: 3/15/04

NOTES:

1) BEAM DESIGN LENGTH SHOWN IN PARENTHESES, THUS ( ).
2) BEARING PAD MARK IS SHOWN THUS (P-XX).
3) ANCHOR HOLES, SEE FABRICATION SHEETS FOR LOCATION.
   - ● BEAM REQUIRES ROUND ANCHOR HOLE.
   - ▬ BEAM REQUIRES SLOTTED ANCHOR HOLE.
4) CONTRACTOR TO FORM BEARING SEATS AT SKEWED REGULAR BENTS SO THAT BEAMS AND PADS DON'T HAVE TO BE BEVELED, UNLESS BEAMS CONFLICT. IF DONE OTHERWISE CONTRACTOR IS TO INFORM BEAM FABRICATOR PRIOR TO SUBMITTAL OF PLANS FOR APPROVAL.
5) ALL UNANSWERED VERIFIES ARE CONSIDERED CORRECT.
6) T.E.S.D. = THICKENED END SLAB DIAPHRAGM.

2509E5.DWG

FABRICATOR: BEXAR CONCRETE WORKS I, LTD.				
CONTRACTOR: SUMMIT CONTRACTING, INC.				
CONTRACTOR'S OPTIONS :	SLAB FORMED BY: PANELS	END DIAPHRAGM: THICKEN SLAB	INTERIOR DIAPHRAGM: NONE	
SHOP PLANS WERE PREPARED BY: BEXAR CONCRETE WORKS I, LTD.				
STATE DISTRICT	FEDERAL REGION	STATE	FEDERAL AID PROJECT NO.	
LAREDO	6	TEXAS	NH-2002 (79)	
COUNTY		CONTROL	SECTION	JOB	HIGHWAY
WEBB		0018	05	062,ETC.	IH 35
JOB. NO.	DRAWN BY	CHECKED BY	DATE OUT	SHEET NO.
2509	MJR	JDH	02-20-04	E-5
ERECTION SHEET				

SHEET NO. 670 L

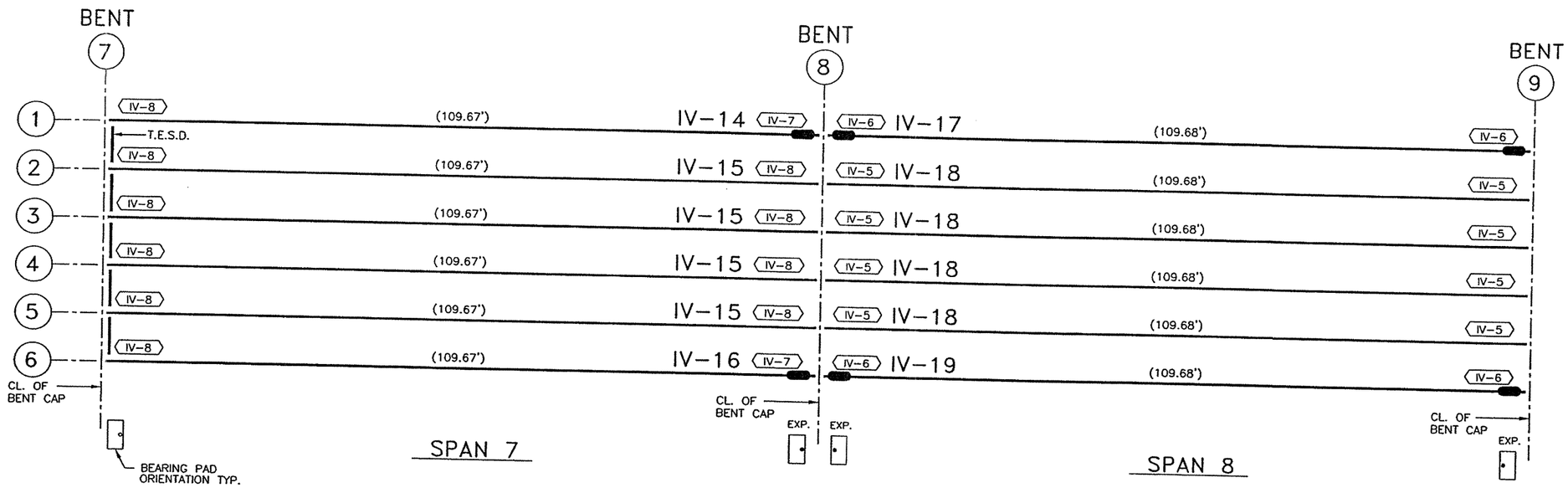

NOTES:

1) BEAM DESIGN LENGTH SHOWN IN PARENTHESES, THUS ( ) .
2) BEARING PAD MARK IS SHOWN THUS ⟨P-XX⟩ .
3) ANCHOR HOLES, SEE FABRICATION SHEETS FOR LOCATION.
   - ● BEAM REQUIRES ROUND ANCHOR HOLE.
   - ▬ BEAM REQUIRES SLOTTED ANCHOR HOLE.
4) CONTRACTOR TO FORM BEARING SEATS AT SKEWED REGULAR BENTS SO THAT BEAMS AND PADS DON'T HAVE TO BE BEVELED, UNLESS BEAMS CONFLICT. IF DONE OTHERWISE CONTRACTOR IS TO INFORM BEAM FABRICATOR PRIOR TO SUBMITTAL OF PLANS FOR APPROVAL.
5) ALL UNANSWERED VERIFIES ARE CONSIDERED CORRECT.
6) T.E.S.D. = THICKENED END SLAB DIAPHRAGM.

NB FRONTAGE ROAD @
TRES EQUIS BLVD.

N

[X] NO EXCEPTIONS
[ ] EXCEPTIONS AS NOTED
[ ] REJECTED - RESUBMIT
KBR
Reviewed as to general compliance with the Contract Documents. This review does not relieve the Contractor/Supplier of his responsibility for adequacy of design correctness of dimensions, and accuracy of detail.
By: Date: 3/16/04

2509E6.DWG

FABRICATOR: BEXAR CONCRETE WORKS I, LTD.				
CONTRACTOR: SUMMIT CONTRACTING, INC.				
CONTRACTOR'S OPTIONS :	SLAB FORMED BY:	END DIAPHRAGM:	INTERIOR DIAPHRAGM:	
	PANELS	THICKEN SLAB	NONE	
SHOP PLANS WERE PREPARED BY: BEXAR CONCRETE WORKS I, LTD.				
STATE DISTRICT	FEDERAL REGION	STATE	FEDERAL AID PROJECT NO.	
LAREDO	6	TEXAS	NH-2002 (79)	
COUNTY	CONTROL	SECTION	JOB	HIGHWAY
WEBB	0018	05	062,ETC.	IH 35
JOB. NO.	DRAWN BY	CHECKED BY	DATE OUT	SHEET NO.
2509	MJR	JDH	02-20-04	E-6
ERECTION SHEET				

SHEET NO. 670M

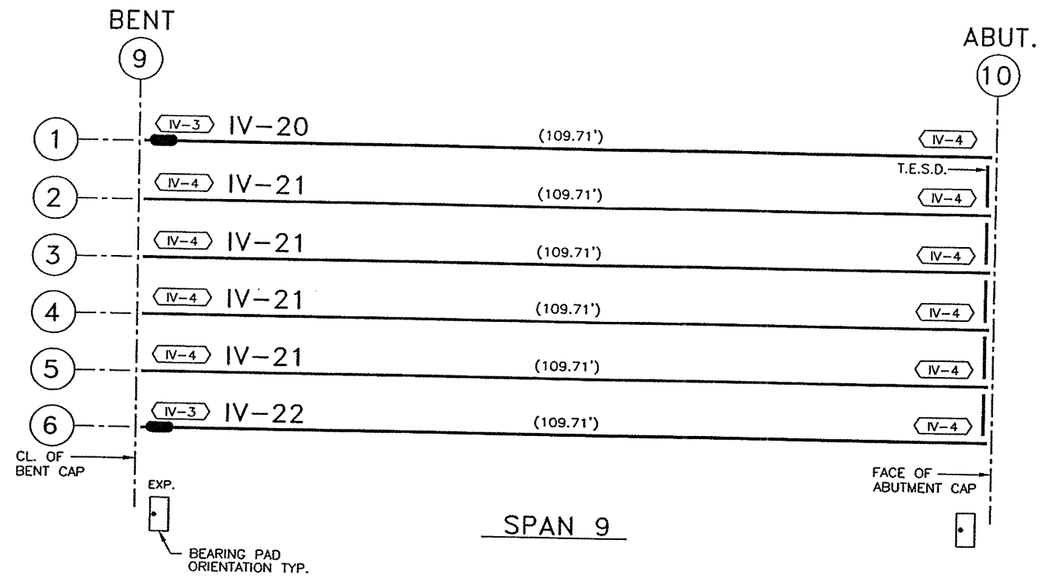

SPAN 9

NB FRONTAGE ROAD @
TRES EQUIS BLVD.

NOTES:

1) BEAM DESIGN LENGTH SHOWN IN PARENTHESES, THUS ( ) .
2) BEARING PAD MARK IS SHOWN THUS ⟨P-XX⟩ .
3) ANCHOR HOLES, SEE FABRICATION SHEETS FOR LOCATION.
   - ● BEAM REQUIRES ROUND ANCHOR HOLE.
   - ▬ BEAM REQUIRES SLOTTED ANCHOR HOLE.
4) CONTRACTOR TO FORM BEARING SEATS AT SKEWED REGULAR BENTS SO THAT BEAMS AND PADS DON'T HAVE TO BE BEVELED, UNLESS BEAMS CONFLICT. IF DONE OTHERWISE CONTRACTOR IS TO INFORM BEAM FABRICATOR PRIOR TO SUBMITTAL OF PLANS FOR APPROVAL.
5) ALL UNANSWERED VERIFIES ARE CONSIDERED CORRECT.
6) T.E.S.D. = THICKENED END SLAB DIAPHRAGM.

☒ NO EXCEPTIONS
☐ EXCEPTIONS AS NOTED
☐ REJECTED - RESUBMIT
KBR
Reviewed as to general compliance with the Contract Documents. This review does not relieve the Contractor/Supplier of his responsibility for adequacy of design correctness of dimensions, and accuracy of detail.
By: Date: 3/16/04

FABRICATOR: BEXAR CONCRETE WORKS I, LTD.

CONTRACTOR: SUMMIT CONTRACTING, INC.

CONTRACTOR'S OPTIONS :	SLAB FORMED BY:	END DIAPHRAGM:	INTERIOR DIAPHRAGM:
	PANELS	THICKEN SLAB	NONE

SHOP PLANS WERE PREPARED BY: BEXAR CONCRETE WORKS I, LTD.

STATE DISTRICT	FEDERAL REGION	STATE	FEDERAL AID PROJECT NO.
LAREDO	6	TEXAS	NH-2002 (79)

COUNTY	CONTROL	SECTION	JOB	HIGHWAY
WEBB	0018	05	062,ETC.	IH 35

JOB. NO.	DRAWN BY	CHECKED BY	DATE OUT	SHEET NO.
2509	MJR	JDH	02-20-04	E-7

ERECTION SHEET

2509E7.DWG

SHEET NO. 67D N

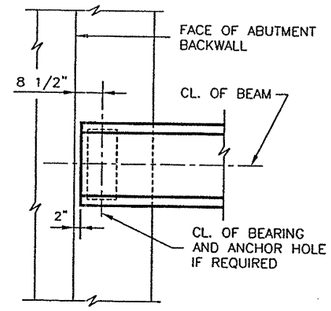

PLAN AT ABUTMENT 1
(ABUTMENT 10 SIMILAR)

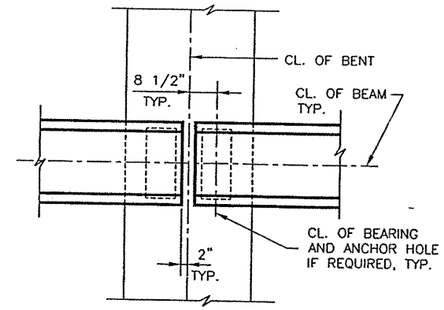

PLAN AT BENTS 2 – 9

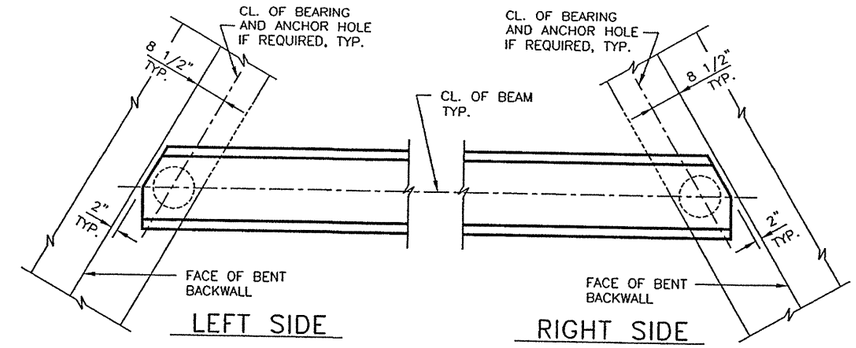

PLAN AT BENT 2
(FROM TRES EQUIS BLVD. UNDERPASS)

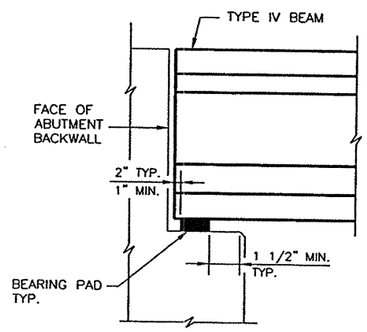

ELEVATION AT ABUTMENT 1
(ABUTMENT 10 SIMILAR)

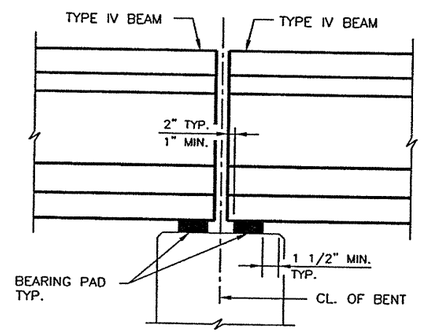

ELEVATION AT BENTS 2 – 9

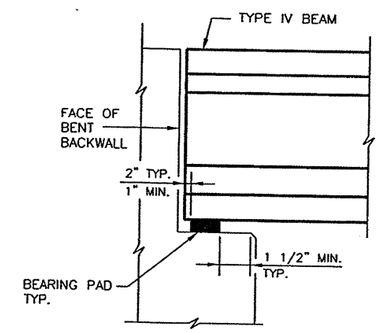

ELEVATION AT BENT 2
(FROM TRES EQUIS BLVD. UNDERPASS)
SHOWING LEFT SIDE, RIGHT SIDE OPPOSITE HAND

☒ NO EXCEPTIONS
☐ EXCEPTIONS AS NOTED
☐ REJECTED - RESUBMIT
KBR
Reviewed as to general compliance with the Contract Documents. This review does not relieve the Contractor/Supplier of his responsibility for adequacy of design correctness of dimensions, and accuracy of detail.
By: [signature] Date: 3/16/04

NB FRONTAGE ROAD @
TRES EQUIS BLVD.

NOTES:

1) CONTRACTOR TO FORM BEARING SEATS AT SKEWED REGULAR BENTS SO THAT BEAMS AND PADS DON'T HAVE TO BE BEVELED, UNLESS BEAMS CONFLICT. IF DONE OTHERWISE CONTRACTOR IS TO INFORM BEAM FABRICATOR PRIOR TO SUBMITTAL OF PLANS FOR APPROVAL.
2) ALL UNANSWERED VERIFIES ARE CONSIDERED CORRECT.
3) PAD LOCATION PROVIDED WAS BASED ON CONTRACT PLANS "ELASTOMERIC BEARING AND BEAM END DETAILS" SHEET.

2509E8.DWG

FABRICATOR: BEXAR CONCRETE WORKS I, LTD.					
CONTRACTOR: SUMMIT CONTRACTING, INC.					
CONTRACTOR'S OPTIONS :	SLAB FORMED BY: PANELS	END DIAPHRAGM: THICKEN SLAB	INTERIOR DIAPHRAGM: NONE		
SHOP PLANS WERE PREPARED BY: BEXAR CONCRETE WORKS I, LTD.					
STATE DISTRICT	FEDERAL REGION	STATE	FEDERAL AID PROJECT NO.		
LAREDO	6	TEXAS	NH-2002 (79)		
COUNTY		CONTROL	SECTION	JOB	HIGHWAY
WEBB		0018	05	062,ETC.	IH 35
JOB. NO.	DRAWN BY	CHECKED BY	DATE OUT	SHEET NO.	
2509	MJR	JDH	02-20-04	E-8	
ERECTION SHEET					

SHEET NO. G70 0

SUMMIT

WEBB

#250902-2

ENGINEER PLEASE NOTE BEAM CLEARANCE OF 3" WAS USED BASED ON CONTRACT PLANS BEAM LENGTH. CONSIDERING "VIM" BEAMS ARE SO LONG, 3" BEAM CLEARANCE IS PREFERRED AND SHOWN ON OUR PLANS.

VERIFY

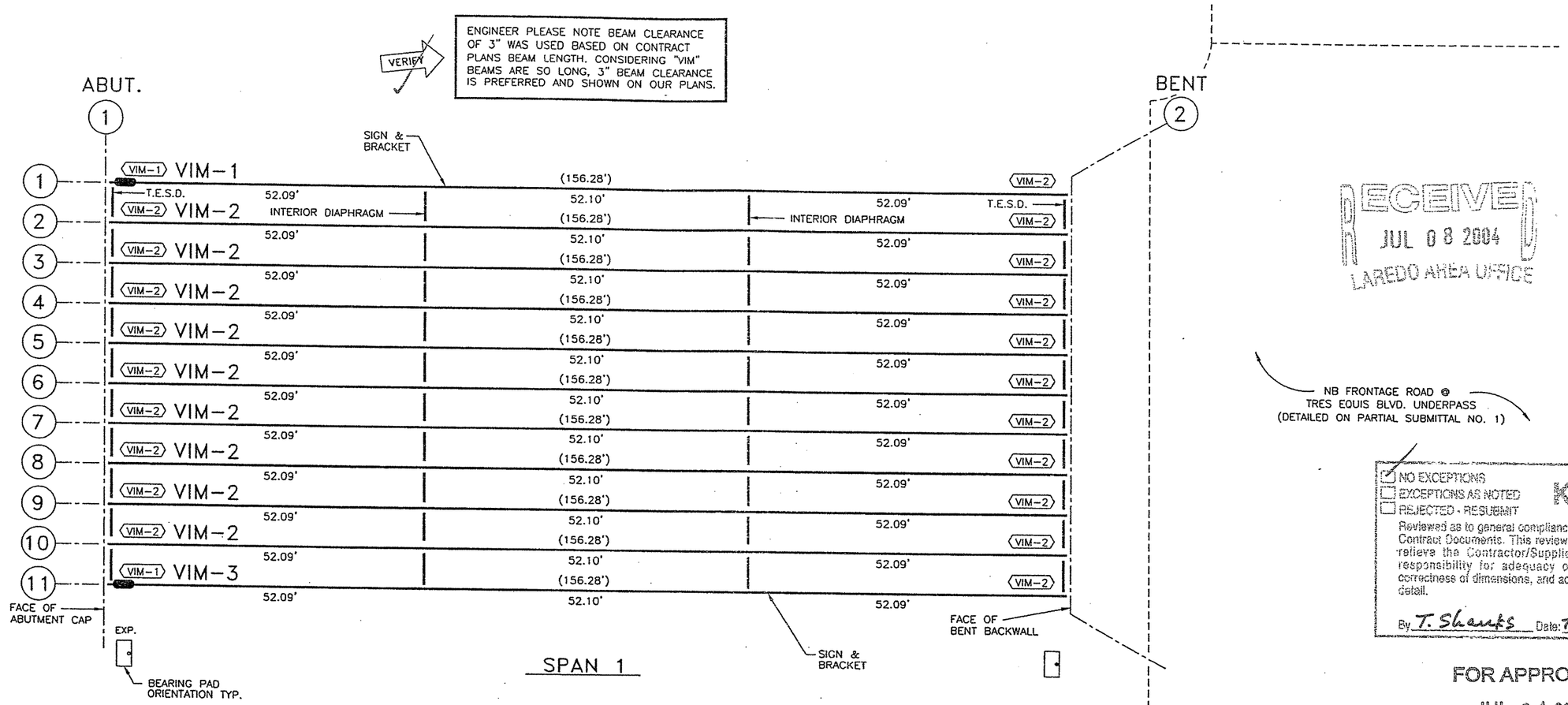

RECEIVED
JUL 08 2004
LAREDO AREA OFFICE

NB FRONTAGE ROAD @
TRES EQUIS BLVD. UNDERPASS
(DETAILED ON PARTIAL SUBMITTAL NO. 1)

☑ NO EXCEPTIONS
☐ EXCEPTIONS AS NOTED
☐ REJECTED - RESUBMIT

KBR

Reviewed as to general compliance with the Contract Documents. This review does not relieve the Contractor/Supplier of his responsibility for adequacy of design correctness of dimensions, and accuracy of detail.

By T. Shaufs Date: 7-23-04

FOR APPROVAL

JUL 01 2004

Bexar Concrete Works I, LTD.

RECEIVED
JUL 29 2004
LAREDO AREA OFFICE

TRES EQUIS BLVD.
UNDERPASS

N

INDEX OF SHEETS

E-9 - E-12	ERECTION SHEETS
I-2	INDEX SHEET
VIM-1 - VIM-6	FABRICATION SHEETS
BP-1	BEARING PAD SHEET
S-"VIM"	STANDARD SHEET

NOTES:

1) BEAM DESIGN LENGTH SHOWN IN PARENTHESES, THUS ( ) .
2) BEARING PAD MARK IS SHOWN THUS ⟨VIM-XX⟩ .
3) ANCHOR HOLES, SEE FABRICATION SHEETS FOR LOCATION.
   - ● BEAM REQUIRES ROUND ANCHOR HOLE.
   - ▬ BEAM REQUIRES SLOTTED ANCHOR HOLE.
4) ALL UNANSWERED VERIFIES ARE CONSIDERED CORRECT.
5) T.E.S.D. = THICKENED END SLAB DIAPHRAGM.

2509E9.DWG

FINAL SUBMITTAL NUMBER 2 OF 2

FABRICATOR: BEXAR CONCRETE WORKS I, LTD.

CONTRACTOR: SUMMIT CONTRACTING, INC.

CONTRACTOR'S OPTIONS :	SLAB FORMED BY:	END DIAPHRAGM:	INTERIOR DIAPHRAGM:
	PANELS	THICKEN SLAB	STEEL

SHOP PLANS WERE PREPARED BY: BEXAR CONCRETE WORKS I, LTD.

STATE DISTRICT	FEDERAL REGION	STATE	FEDERAL AID PROJECT NO.
LAREDO	6	TEXAS	NH-2002 (79)

COUNTY	CONTROL	SECTION	JOB	HIGHWAY
WEBB	0018	05	062,ETC.	IH 35

JOB. NO.	DRAWN BY	CHECKED BY	DATE OUT	SHEET NO.
2509	MJR	JDH	07-02-04	E-9

ERECTION SHEET

SHEET NO. 670 P

(1) ENGINEER PLEASE NOTE BEAM CLEARANCE OF 3" WAS BASED ON CONTRACT PLANS BEAM LENGTH. CONSIDERING "VIM" BEAMS ARE SO LONG, 3" BEAM CLEARANCE IS PREFERRED AND SHOWN ON OUR PLANS.

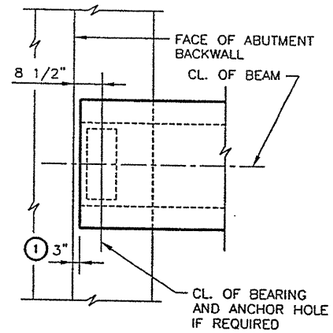

PLAN AT ABUTMENT 1

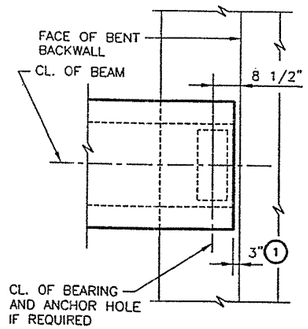

PARTIAL PLAN AT BENT 2

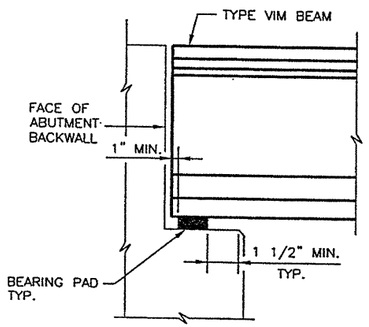

ELEVATION AT ABUTMENT 1

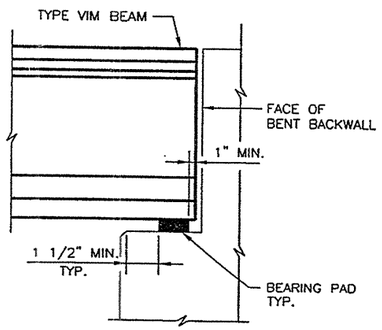

PARTIAL ELEVATION AT BENT 2

☑ NO EXCEPTIONS
☐ EXCEPTIONS AS NOTED
☐ REJECTED - RESUBMIT

KBR

Reviewed as to general compliance with the Contract Documents. This review does not relieve the Contractor/Supplier of his responsibility for adequacy of design correctness of dimensions, and accuracy of detail.

By T. Shanks Date: 7-23-04

FOR APPROVAL

JUL 01 2004

Bexar Concrete Works I, LTD.

TRES EQUIS BLVD.
UNDERPASS

NOTES:

1) ALL UNANSWERED VERIFIES ARE CONSIDERED CORRECT.
2) PAD LOCATION PROVIDED WAS BASED ON CONTRACT PLANS "ELASTOMERIC BEARING AND BEAM END DETAILS" SHEET.

2509E10.DWG

FABRICATOR: BEXAR CONCRETE WORKS I, LTD.

CONTRACTOR: SUMMIT CONTRACTING, INC.

CONTRACTOR'S OPTIONS :	SLAB FORMED BY:	END DIAPHRAGM:	INTERIOR DIAPHRAGM:
	PANELS	THICKEN SLAB	STEEL

SHOP PLANS WERE PREPARED BY: BEXAR CONCRETE WORKS I, LTD.

STATE DISTRICT	FEDERAL REGION	STATE	FEDERAL AID PROJECT NO.
LAREDO	6	TEXAS	NH-2002 (79)

COUNTY	CONTROL	SECTION	JOB	HIGHWAY
WEBB	0018	05	062,ETC.	IH 35

JOB. NO.	DRAWN BY	CHECKED BY	DATE OUT	SHEET NO.
2509	MJR	JDH	07-02-04	E-10

ERECTION SHEET

SHEET NO. 670 Q

ENGINEER PLEASE NOTE BEAM CLEARANCE OF 3" WAS USED BASED ON CONTRACT PLANS BEAM LENGTH. CONSIDERING "VIM" BEAMS ARE SO LONG, 3" BEAM CLEARANCE IS PREFERRED AND SHOWN ON OUR PLANS.

VERIFY

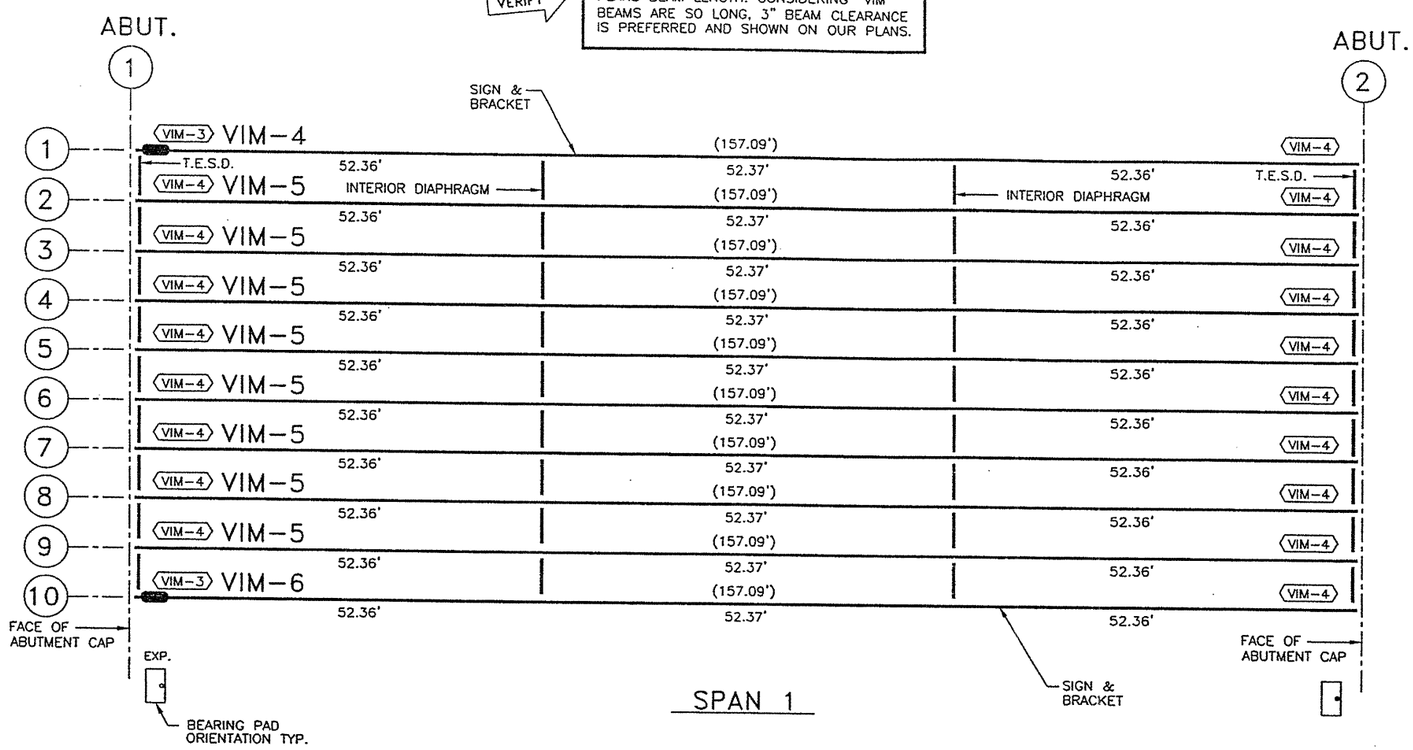

SPAN 1

CARRIER DRIVE UNDERPASS

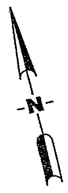

NOTES:

1) BEAM DESIGN LENGTH SHOWN IN PARENTHESES, THUS ( ) .
2) BEARING PAD MARK IS SHOWN THUS (VIM-XX) .
3) ANCHOR HOLES, SEE FABRICATION SHEETS FOR LOCATION.
   - ● BEAM REQUIRES ROUND ANCHOR HOLE.
   - ▬ BEAM REQUIRES SLOTTED ANCHOR HOLE.
4) ALL UNANSWERED VERIFIES ARE CONSIDERED CORRECT.
5) T.E.S.D. = THICKENED END SLAB DIAPHRAGM.

☑ NO EXCEPTIONS
☐ EXCEPTIONS AS NOTED
☐ REJECTED - RESUBMIT

KBR

Reviewed as to general compliance with the Contract Documents. This review does not relieve the Contractor/Supplier of his responsibility for adequacy of design correctness of dimensions, and accuracy of detail.

By T. Shanks Date: 7-23-04

FOR APPROVAL
JUL 01 2004
Bexar Concrete Works I, LTD.

FABRICATOR: BEXAR CONCRETE WORKS I, LTD.

CONTRACTOR: SUMMIT CONTRACTING, INC.

CONTRACTOR'S OPTIONS :	SLAB FORMED BY:	END DIAPHRAGM:	INTERIOR DIAPHRAGM:
	PANELS	THICKEN SLAB	STEEL

SHOP PLANS WERE PREPARED BY: BEXAR CONCRETE WORKS I, LTD.

STATE DISTRICT	FEDERAL REGION	STATE	FEDERAL AID PROJECT NO.
LAREDO	6	TEXAS	NH-2002 (79)

COUNTY	CONTROL	SECTION	JOB	HIGHWAY
WEBB	0018	05	062,ETC.	IH 35

JOB. NO.	DRAWN BY	CHECKED BY	DATE OUT	SHEET NO.
2509	MJR	JDH	07-02-04	E-11

ERECTION SHEET

2509E11.DWG

SHEET NO. 670 R

(1) ENGINEER PLEASE NOTE BEAM CLEARANCE OF 3" WAS BASED ON CONTRACT PLANS BEAM LENGTH. CONSIDERING "VIM" BEAMS ARE SO LONG, 3" BEAM CLEARANCE IS PREFERRED AND SHOWN ON OUR PLANS.

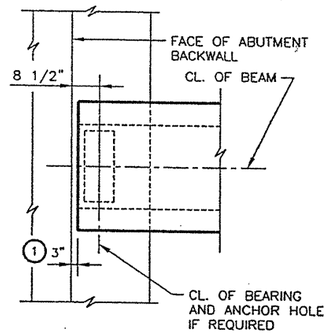

PLAN AT ABUTMENT 1

(ABUTMENT 2 SIMILAR)

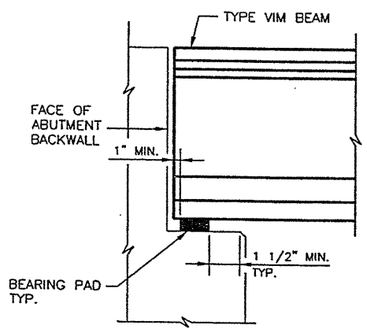

ELEVATION AT ABUTMENT 1

(ABUTMENT 2 SIMILAR)

CARRIER DRIVE
UNDERPASS

NOTES:

1) ALL UNANSWERED VERIFIES ARE CONSIDERED CORRECT.
2) PAD LOCATION PROVIDED WAS BASED ON CONTRACT PLANS "ELASTOMERIC BEARING AND BEAM END DETAILS" SHEET.

2509E12.DWG

☑ NO EXCEPTIONS
☐ EXCEPTIONS AS NOTED
☐ REJECTED - RESUBMIT

KBR

Reviewed as to general compliance with the Contract Documents. This review does not relieve the Contractor/Supplier of his responsibility for adequacy of design correctness of dimensions, and accuracy of detail.

By T. Shanks Date: 7-23-04

FOR APPROVAL

JUL 01 2004

Bexar Concrete Works I, LTD.

FABRICATOR: BEXAR CONCRETE WORKS I, LTD.

CONTRACTOR: SUMMIT CONTRACTING, INC.

CONTRACTOR'S OPTIONS :	SLAB FORMED BY:	END DIAPHRAGM:	INTERIOR DIAPHRAGM:
	PANELS	THICKEN SLAB	STEEL

SHOP PLANS WERE PREPARED BY: BEXAR CONCRETE WORKS I, LTD.

STATE DISTRICT	FEDERAL REGION	STATE	FEDERAL AID PROJECT NO.
LAREDO	6	TEXAS	NH-2002 (79)

COUNTY	CONTROL	SECTION	JOB	HIGHWAY
WEBB	0018	05	062,ETC.	IH 35

JOB. NO.	DRAWN BY	CHECKED BY	DATE OUT	SHEET NO.
2509	MJR	JDH	07-02-04	E-12

ERECTION SHEET

SHEET NO. 670 S

BEAM INDEX

LOCATION		BEAM			LENGTH		BEAM ENDS		LO-LAX STRANDS (270ksi)					CONCRETE			
BRIDGE	SPAN	TYPE	MARK	QUANTITY	DESIGN LENGTH (FEET)	CAST LENGTH (FEET)	SKEWED	BATTERED	TOTAL STRAND QUANTITY	STRAND SIZE (IN.)	APPROX. UPLIFT FORCE (kips)	DEPRESSED QUANTITY	DEPRESSED AT END (IN.)	RELEASE STRENGTH (PSI)	MIN. 28 DAY STRENGTH (PSI)	FABRICATION DETAIL SHEET NUMBER	OPTIONAL DESIGN NUMBER (IF REQ'D.)
UNIROYAL ROAD OVERPASS	1, 3	C	C-1	2	39.67	*39.71*	NO	~~NO~~	12	1/2	12.06	10	16	4000	5000	C-1	
	1, 3	C	C-2	4	39.67	*39.71*	NO	~~NO~~	12	1/2	12.06	10	16	4000	5000	C-2	
	1, 3	C	C-3	2	39.67	*39.71*	NO	~~NO~~	12	1/2	12.06	10	16	4000	5000	C-3	
	2	C	C-4	1	49.67	*49.72*	NO	NO	16	1/2	11.57	10	18	4000	5000	C-4	
	2	C	C-5	2	49.67	*49.72*	NO	NO	16	1/2	11.57	10	18	4000	5000	C-5	
	2	C	C-6	1	49.67	*49.72*	NO	NO	16	1/2	11.57	10	18	4000	5000	C-6	
NB FRONTAGE ROAD @ TRES EQUIS BLVD.	1	IV	IV-1	1	114.75	*114.81*	NO	YES	68	1/2	30.12	18	50	6684	8062	IV-1	
	1	IV	IV-2	4	114.75	*114.81*	NO	YES	68	1/2	30.12	18	50	6684	8062	IV-2	
	1	IV	IV-3	1	114.75	*114.81*	NO	YES	68	1/2	30.12	18	50	6684	8062	IV-3	
	2	IV	IV-4	1	114.75	*114.81*	NO	NO	68	1/2	30.12	18	50	6684	8062	IV-4	
	2	IV	IV-5	4	114.75	*114.81*	NO	NO	68	1/2	30.12	18	50	6684	8062	IV-5	
	2	IV	IV-6	1	114.75	*114.81*	NO	NO	68	1/2	30.12	18	50	6684	8062	IV-6	
	3, 4, 5	IV	IV-7	3	114.69	*114.75*	NO	NO	68	1/2	30.14	18	50	6684	8062	IV-7	
	3, 4, 5	IV	IV-8	12	114.69	*114.75*	NO	NO	68	1/2	30.14	18	50	6684	8062	IV-8	
	3, 4, 5	IV	IV-9	3	114.69	*114.75*	NO	NO	68	1/2	30.14	18	50	6684	8062	IV-9	
	6	IV	IV-10	1	88.42	*88.46*	YES	NO	66	1/2	31.09	16	44	7112	7137	IV-10	
	6	IV	IV-11	1	122.67	*122.73*	NO	NO	76	1/2	33.03	26	52	6847	9816	IV-11	
	6	IV	IV-12	5	122.67	*122.73*	NO	NO	68	1/2	29.91	18	52	6543	8682	IV-12	
	6	IV	IV-13	1	122.67	*122.73*	NO	NO	68	1/2	29.91	18	52	6543	8682	IV-13	
	7	IV	IV-14	1	109.67	*109.72*	NO	NO	58	1/2	26.18	12	52	6112	7030	IV-14	
	7	IV	IV-15	4	109.67	*109.72*	NO	NO	58	1/2	26.18	12	52	6112	7030	IV-15	
	7	IV	IV-16	1	109.67	*109.72*	NO	NO	58	1/2	26.18	12	52	6112	7030	IV-16	
	8	IV	IV-17	1	109.68	*109.73*	NO	NO	58	1/2	26.18	12	52	6112	7030	IV-17	
	8	IV	IV-18	4	109.68	*109.73*	NO	NO	58	1/2	26.18	12	52	6112	7030	IV-18	
	8	IV	IV-19	1	109.68	*109.73*	NO	NO	58	1/2	26.18	12	52	6112	7030	IV-19	
	9	IV	IV-20	1	109.71	*109.76*	NO	YES	58	1/2	26.17	12	52	6112	7030	IV-20	
	9	IV	IV-21	4	109.71	*109.76*	NO	YES	58	1/2	26.17	12	52	6112	7030	IV-21	
	9	IV	IV-22	1	109.71	*109.76*	NO	YES	58	1/2	26.17	12	52	6112	7030	IV-22	

VERIFY

NOTE: BEAM IV-10's LENGTH PROVIDED IS AS PER PLANS. LENGTH SHOULD BE FIELD VERIFIED PRIOR TO APPROVAL AND IF NEEDED REVISED ON OUR SHOP PLANS.

OK

may need to separate out due to varying design length

NOTES:

1) CONTRACTOR TO FORM BEARING SEATS AT SKEWED REGULAR BENTS SO THAT BEAMS AND PADS DON'T HAVE TO BE BEVELED, UNLESS BEAMS CONFLICT. IF DONE OTHERWISE CONTRACTOR IS TO INFORM BEAM FABRICATOR PRIOR TO SUBMITTAL OF PLANS FOR APPROVAL.

2) CONTRACTOR TO VERIFY ALL INSERT SPACING, LOCATION AND QUANTITIES PRIOR TO SUBMITAL OF PLANS FOR APPROVAL.

3) ALL UNANSWERED VERIFIES ARE CONSIDERED CORRECT.

PROJECT INSERT QUANTITIES

TOTAL QUANTITY OF 45° INSERTS FOR OVERHANG, SUPPLIED BY CONTRACTOR, ON THIS PARTIAL SUBMITTAL = 782

PER BRIDGE LINEAR FOOTAGE

BRIDGE	BEAM = FOOTAGE
UNIROYAL ROAD OVERPASS	TYPE "C" = 516.04'
NB FRONTAGE ROAD @ TRES EQUIS BLVD.	TYPE "IV" = 6,362.89'

TOTAL LINEAR FOOTAGE ON THIS PARTIAL SUBMITTAL:
ALL TYPE OF BEAMS = 6,878.93'

☐ NO EXCEPTIONS
☒ EXCEPTIONS AS NOTED
☐ REJECTED - RESUBMIT

KBR

Reviewed as to general compliance with the Contract Documents. This review does not relieve the Contractor/Supplier of his responsibility for adequacy of design correctness of dimensions, and accuracy of detail.

By [signature] Date 3/16/04

△1 REVISED: 02-27-04 "C" BEAM DESIGNS
250911.DWG

PARTIAL SUBMITTAL NUMBER 1 OF 2

FABRICATOR: BEXAR CONCRETE WORKS I, LTD.

CONTRACTOR: SUMMIT CONTRACTING, INC.

SHOP PLANS WERE PREPARED BY: BEXAR CONCRETE WORKS I, LTD.

STATE DISTRICT	FEDERAL REGION	STATE	FEDERAL AID PROJECT NO.
LAREDO	6	TEXAS	NH-2002 (79)

COUNTY	CONTROL	SECTION	JOB	HIGHWAY
WEBB	0018	05	062,ETC.	IH 35

JOB. NO.	DRAWN BY	CHECKED BY	DATE OUT	SHEET NO.
2509	MJR	JDH	02-20-04	I-1

BEAM INDEX SHEET

SHEET NO. 670T

BEAM INDEX

LOCATION		BEAM			LENGTH		BEAM ENDS		LO-LAX STRANDS (270ksi)					CONCRETE			
BRIDGE	SPAN	TYPE	MARK	QUANTITY	DESIGN LENGTH (FEET)	CAST LENGTH (FEET)	SKEWED	BATTERED	TOTAL STRAND QUANTITY	STRAND SIZE (IN.)	APPROX. UPLIFT FORCE (kips) (FOR FABRICATOR'S USE ONLY)	DEPRESSED QUANTITY	DEPRESSED AT END (IN.)	RELEASE STRENGTH (PSI)	MIN. 28 DAY STRENGTH (PSI)	FABRICATION DETAIL SHEET NUMBER	OPTIONAL DESIGN NUMBER (IF REQ'D.)
TRES EQUIS BLVD. UNDERPASS	1	VIM	VIM-1	1	156.28	*156.36*	NO	YES	84	1/2	46.38	34	70	6447	8645	VIM-1	
	1	VIM	VIM-2	9	156.28	*156.36*	NO	YES	84	1/2	46.38	34	70	6447	8645	VIM-2	
	1	VIM	VIM-3	1	156.28	*156.36*	NO	YES	84	1/2	46.38	34	70	6447	8645	VIM-3	
CARRIER DRIVE UNDERPASS	1	VIM	VIM-4	1	157.09	*157.17*	NO	YES	86	1/2	46.10	36	70	6549	8886	VIM-4	
	1	VIM	VIM-5	8	157.09	*157.17*	NO	YES	86	1/2	46.10	36	70	6549	8886	VIM-5	
	1	VIM	VIM-6	1	157.09	*157.17*	NO	YES	86	1/2	46.10	36	70	6549	8886	VIM-6	

VERIFY

NOTES:

1) CONTRACTOR TO VERIFY ALL INSERT SPACING, LOCATION AND QUANTITIES PRIOR TO SUBMITTAL OF PLANS FOR APPROVAL. CONTRACTOR TO VERIFY OVERHANG INSERTS FOR STRUCTURAL INTEGRITY IN TOP FLANGE OF "VIM" BEAM.

2) ALL UNANSWERED VERIFIES ARE CONSIDERED CORRECT.

PROJECT INSERT QUANTITIES

TOTAL QUANTITY OF 45° INSERTS FOR OVERHANG, SUPPLIED BY CONTRACTOR, ON THIS PARTIAL SUBMITTAL = 214

TOTAL QUANTITY OF RICHMOND LF. 5/8" ø INSERTS, OR EQUAL, ON THIS PARTIAL SUBMITTAL = 8

FOR APPROVAL
JUL 01 2004
Bexar Concrete Works I, LTD.

PER BRIDGE LINEAR FOOTAGE

BRIDGE	BEAM = FOOTAGE
TRES EQUIS BLVD. UNDERPASS	TYPE "VIM" = 1,719.08'
CARRIER DRIVE UNDERPASS	TYPE "VIM" = 1,570.90'

TOTAL LINEAR FOOTAGE ON THIS FINAL SUBMITTAL:
TYPE "VIM" = 3,289.98'

☑ NO EXCEPTIONS
☐ EXCEPTIONS AS NOTED
☐ REJECTED - RESUBMIT
KBR
Reviewed as to general compliance with the Contract Documents. This review does not relieve the Contractor/Supplier of his responsibility for adequacy of design correctness of dimensions, and accuracy of detail.
By T. Shanks Date: 7-23-04

FINAL SUBMITTAL NUMBER 2 OF 2

FABRICATOR: BEXAR CONCRETE WORKS I, LTD.

CONTRACTOR: SUMMIT CONTRACTING, INC.

SHOP PLANS WERE PREPARED BY: BEXAR CONCRETE WORKS I, LTD.

STATE DISTRICT	FEDERAL REGION	STATE	FEDERAL AID PROJECT NO.			
LAREDO	6	TEXAS	NH-2002 (79)			
COUNTY			CONTROL	SECTION	JOB	HIGHWAY
WEBB			0018	05	062,ETC.	IH 35

JOB. NO.	DRAWN BY	CHECKED BY	DATE OUT	SHEET NO.
2509	MJR	JDH	07-02-04	1-2

BEAM INDEX SHEET

250912.DWG

SHEET NO. G70 U

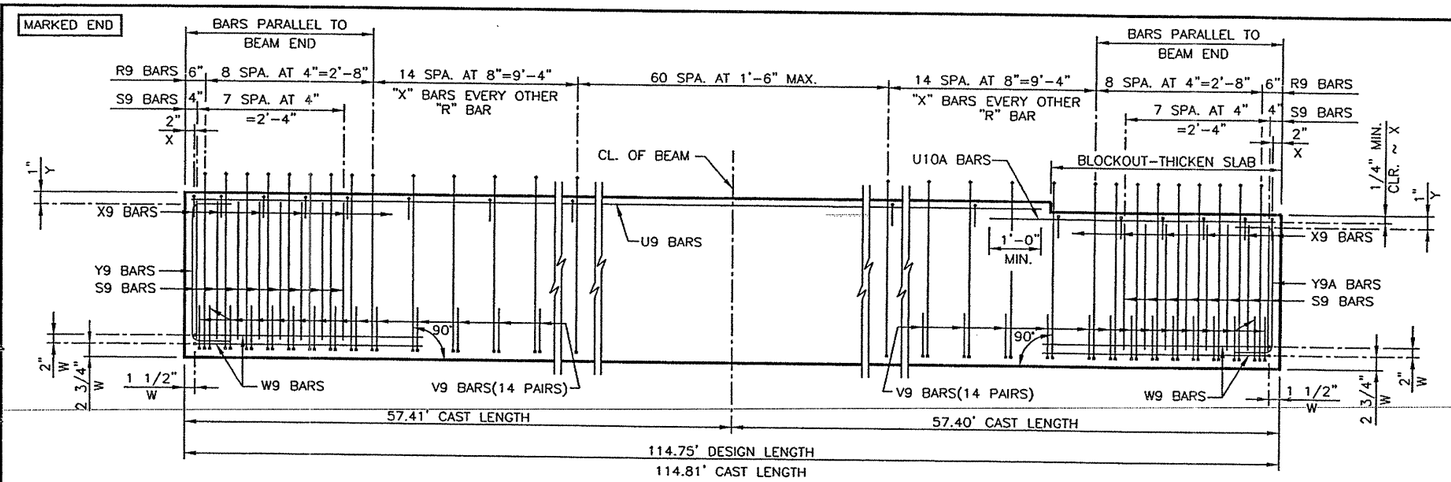

BEAM ELEVATION (REINF.)

REINFORCING STEEL TABLE				
BAR MARK	BAR SIZE	TOTAL QUANTITY PER BM.	TOTAL QUANTITY PER SHT.	BAR LENGTH
R9	#4	105	105	SEE SHT. S-"IV"
S9	#7	32	32	SEE SHT. S-"IV"
U9	#5	2	2	110'-9"
U10A	#5	2	2	6'-6"
V9	#4	56	56	SEE SHT. S-"IV"
W9	#5	4	4	SEE SHT. S-"IV"
X9	#3	85	85	SEE SHT. S-"IV"
Y9	#6	2	2	SEE SHT. S-"IV"
Y9A	#6	2	2	SEE SHT. S-"IV"

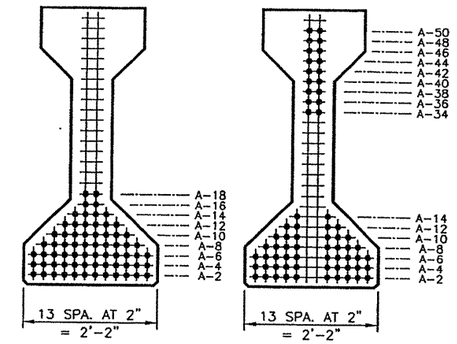

CL. SECTION END SECTION

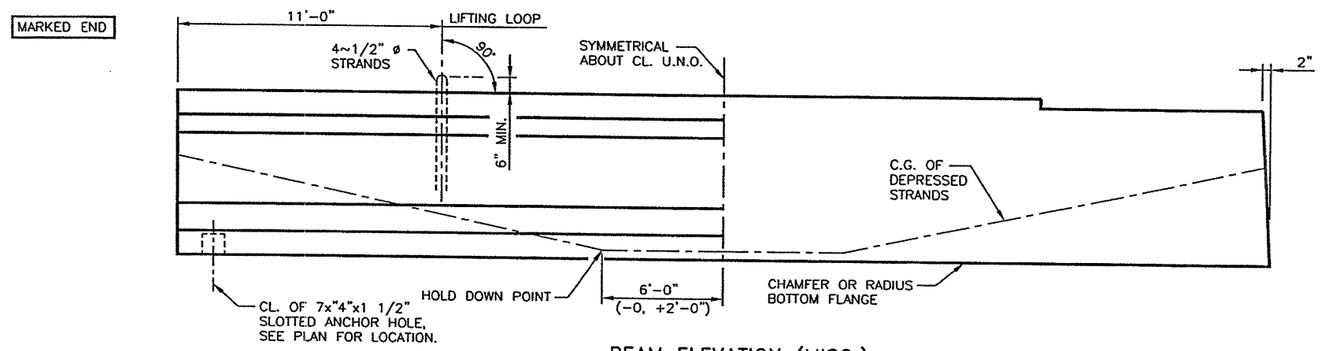

BEAM ELEVATION (MISC.)

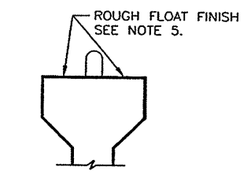

BEAM FINISH

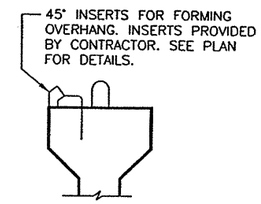

TOP FLANGE INSERTS
(SUPPLIED BY CONTRACTOR)

LO-LAX STRAND PATTERN	
DESIGN REF. NO.	: SHEET 647
TOTAL STRAND QUANTITY	: 68
STRAND SIZE AND TYPE : 1/2" ø 270 ksi TO 31.0k	
ECCENTRICITY AT CL. (IN.)	: 17.40
ECCENTRICITY AT END (IN.)	: 8.93
DEPRESSED QUANTITY AND LOC. (IN.)	: 18 AT A-50
RELEASE STRENGTH (PSI)	: 6684
MIN. 28 DAY STRENGTH (PSI)	: 8062
APPROX. UPLIFT FORCE (kips)	: 30.12

NOTES:

1) ALL UNANSWERED VERIFIES ARE CONSIDERED CORRECT.
2) ALL DIMENSIONS PERTAINING TO STRANDS AND REINFORCING BARS WILL BE CENTER TO CENTER.
3) FOR ALL DIMENSIONS AND DETAILS NOT SHOWN SEE STANDARD SHEET S-"IV".
4) CONTRACTOR TO CUT LIFTING LOOPS TO 2" AFTER ERECTION.
5) ALL BEAMS SHALL HAVE A ROUGH FLOATED FINISH AS SPECIFIED IN TxDOT'S "TEXAS STANDARD SPECIFICATIONS" ITEM 424.4.5.a.
6) ON BRIDGE, BEAMS TO BE PLACED AS MARKS ARE SHOW ON ERECTION SHEETS. ON FABRICATION SHEETS, BEAMS ARE DETAILED WITH MARKS ON LEFT SIDE.

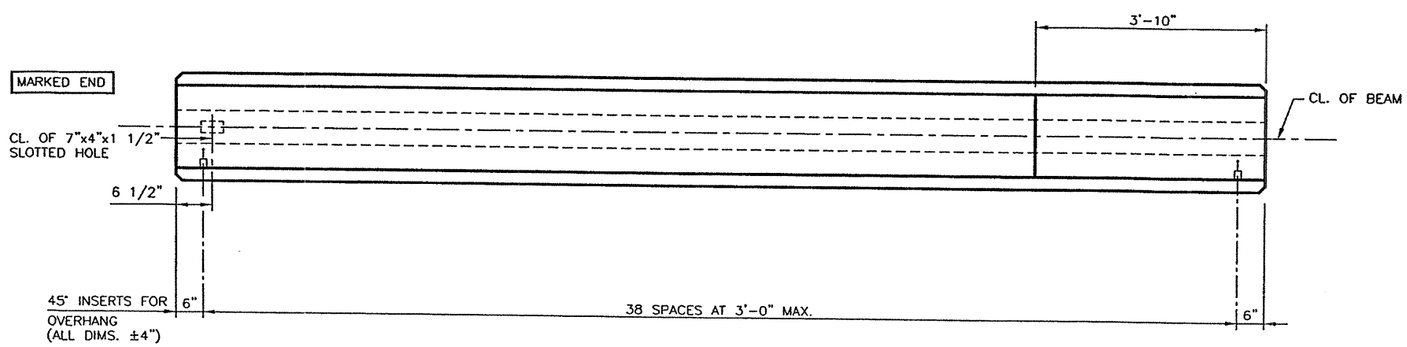

BEAM PLAN

TOTAL QUANTITY OF 45° INSERTS FOR OVERHANG, SUPPLIED BY CONTRACTOR, ON THIS SHEET = 39

BEAM TYPE = "IV"
BEAM MARK = IV-1
TOTAL BEAMS ON THIS SHEET = 1
TOTAL LINEAR FOOTAGE THIS SHEET = 114.75'

FABRICATOR: BEXAR CONCRETE WORKS I, LTD.

CONTRACTOR: SUMMIT CONTRACTING, INC.

SHOP PLANS WERE PREPARED BY: BEXAR CONCRETE WORKS I, LTD.

STATE DISTRICT	FEDERAL REGION	STATE	FEDERAL AID PROJECT NO.			
LAREDO	6	TEXAS	NH-2002 (79)			
COUNTY			CONTROL	SECTION	JOB	HIGHWAY
WEBB			0018	05	062,ETC.	IH 35
JOB. NO.	DRAWN BY		CHECKED BY	DATE OUT		SHEET NO.
2509	MJR		JDH	02-20-04		IV-1
FABRICATION SHEET						

2509IV1.DWG

SHEET NO. 670 V

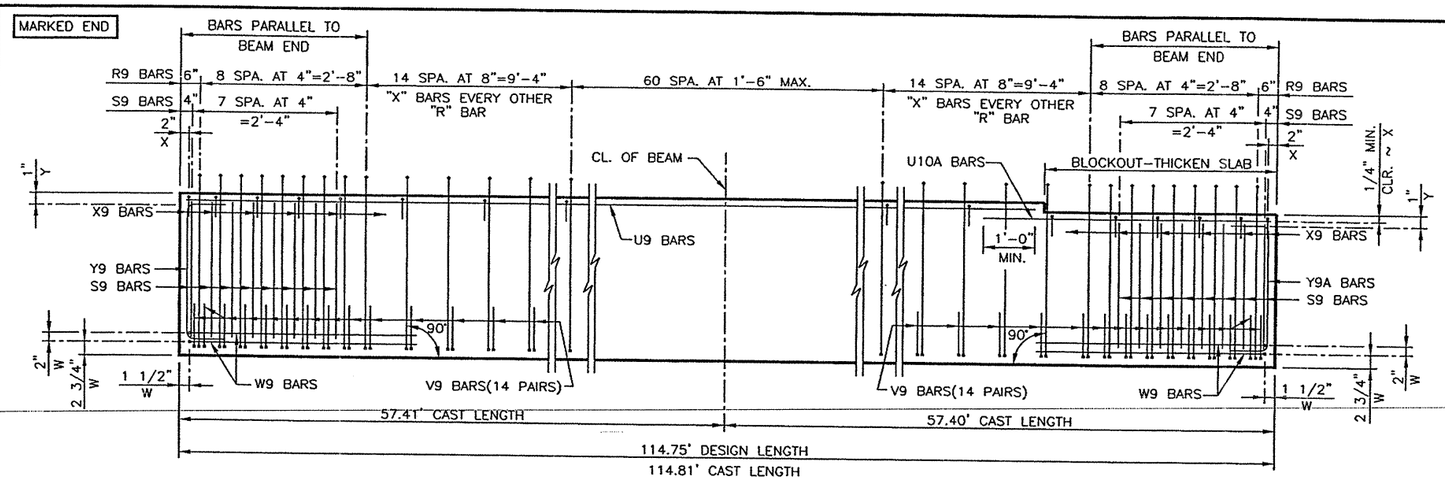

BEAM ELEVATION (REINF.)

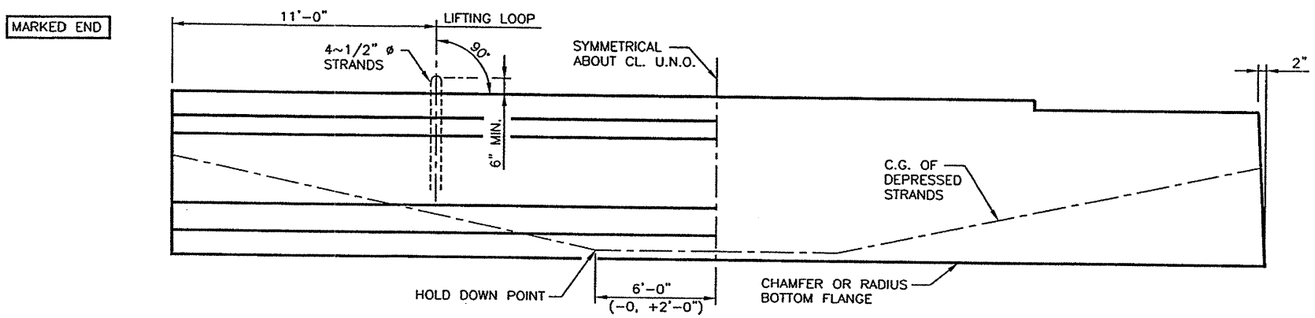

BEAM ELEVATION (MISC.)

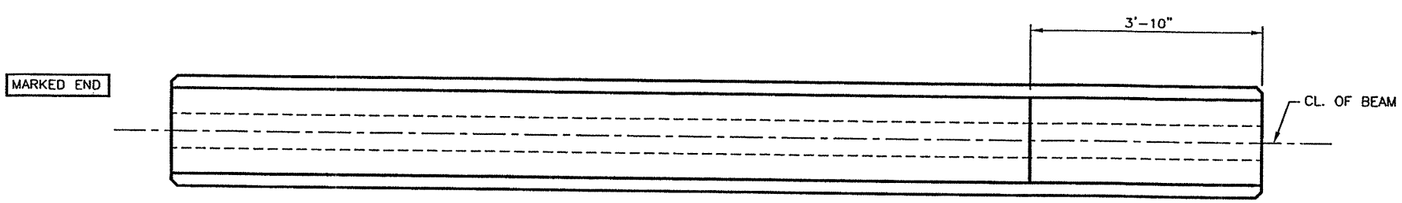

NO SKEW

BEAM PLAN

NO SKEW

REINFORCING STEEL TABLE

BAR MARK	BAR SIZE	TOTAL QUANTITY PER BM.	TOTAL QUANTITY PER SHT.	BAR LENGTH
R9	#4	105	420	SEE SHT. S-"IV"
S9	#7	32	128	SEE SHT. S-"IV"
U9	#5	2	8	110'-9"
U10A	#5	2	8	6'-6"
V9	#4	56	224	SEE SHT. S-"IV"
W9	#5	4	16	SEE SHT. S-"IV"
X9	#3	85	340	SEE SHT. S-"IV"
Y9	#6	2	8	SEE SHT. S-"IV"
Y9A	#6	2	8	SEE SHT. S-"IV"

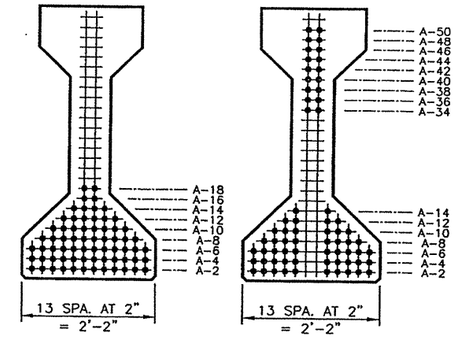

CL. SECTION END SECTION

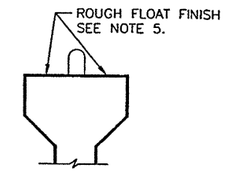

BEAM FINISH

LO-LAX STRAND PATTERN

DESIGN REF. NO.	: SHEET 647
TOTAL STRAND QUANTITY	: 68
STRAND SIZE AND TYPE	: 1/2" ø 270 ksi TO 31.0k
ECCENTRICITY AT CL. (IN.)	: 17.40
ECCENTRICITY AT END (IN.)	: 8.93
DEPRESSED QUANTITY AND LOC. (IN.)	: 18 AT A-50
RELEASE STRENGTH (PSI)	: 6684
MIN. 28 DAY STRENGTH (PSI)	: 8062
APPROX. UPLIFT FORCE (kips)	: 30.12

NOTES:

1) ALL UNANSWERED VERIFIES ARE CONSIDERED CORRECT.
2) ALL DIMENSIONS PERTAINING TO STRANDS AND REINFORCING BARS WILL BE CENTER TO CENTER.
3) FOR ALL DIMENSIONS AND DETAILS NOT SHOWN SEE STANDARD SHEET S-"IV".
4) CONTRACTOR TO CUT LIFTING LOOPS TO 2" AFTER ERECTION.
5) ALL BEAMS SHALL HAVE A ROUGH FLOATED FINISH AS SPECIFIED IN TxDOT'S "TEXAS STANDARD SPECIFICATIONS" ITEM 424.4.5.a.
6) ON BRIDGE, BEAMS TO BE PLACED AS MARKS ARE SHOW ON ERECTION SHEETS. ON FABRICATION SHEETS, BEAMS ARE DETAILED WITH MARKS ON LEFT SIDE.

BEAM TYPE = "IV"
BEAM MARK = IV-2
TOTAL BEAMS ON THIS SHEET = 4
TOTAL LINEAR FOOTAGE THIS SHEET = 459.00'

FABRICATOR: BEXAR CONCRETE WORKS I, LTD.

CONTRACTOR: SUMMIT CONTRACTING, INC.

SHOP PLANS WERE PREPARED BY: BEXAR CONCRETE WORKS I, LTD.

STATE DISTRICT	FEDERAL REGION	STATE	FEDERAL AID PROJECT NO.			
LAREDO	6	TEXAS	NH-2002 (79)			
COUNTY			CONTROL	SECTION	JOB	HIGHWAY
WEBB			0018	05	062,ETC.	IH 35
JOB. NO.	DRAWN BY	CHECKED BY	DATE OUT			SHEET NO.
2509	MJR	JDH	02-20-04			IV-2

FABRICATION SHEET

2509IV2.DWG

SHEET NO. 670W

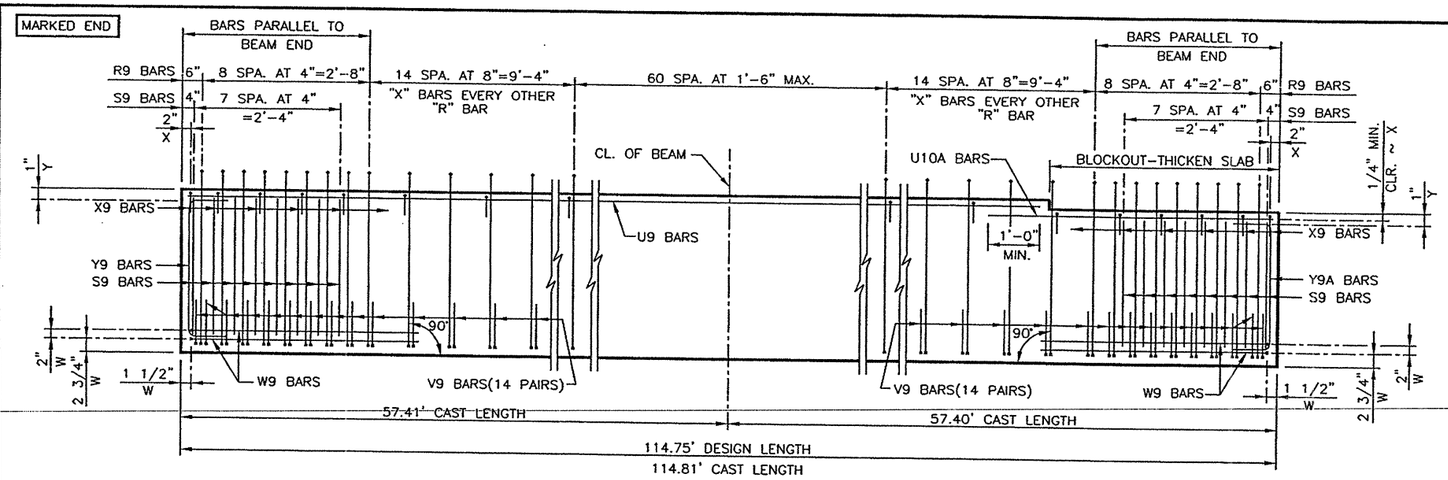

BEAM ELEVATION (REINF.)

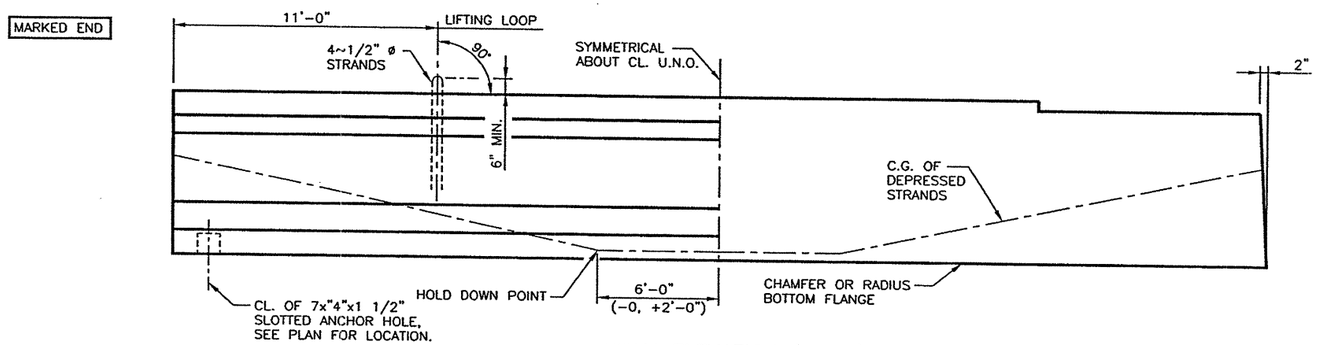

BEAM ELEVATION (MISC.)

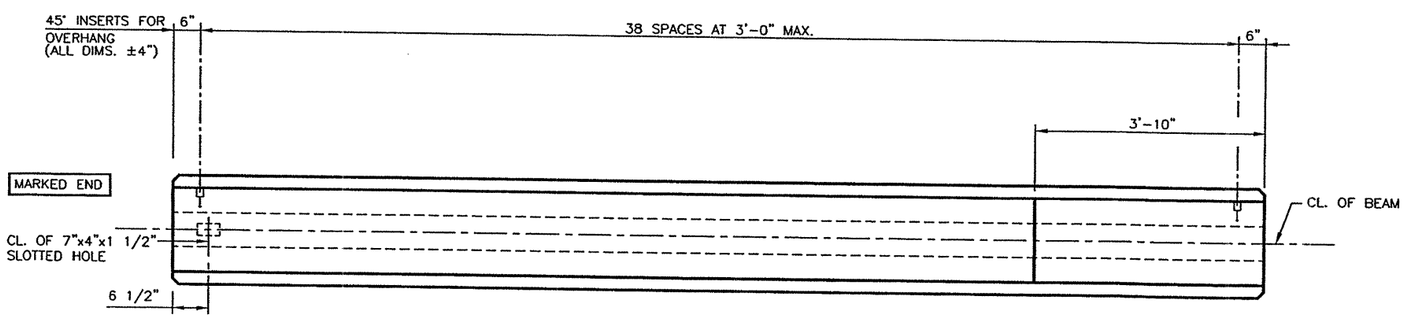

NO SKEW

BEAM PLAN

NO SKEW

REINFORCING STEEL TABLE

BAR MARK	BAR SIZE	TOTAL QUANTITY PER BM.	TOTAL QUANTITY PER SHT.	BAR LENGTH
R9	#4	105	105	SEE SHT. S-"IV"
S9	#7	32	32	SEE SHT. S-"IV"
U9	#5	2	2	110'-9"
U10A	#5	2	2	6'-6"
V9	#4	56	56	SEE SHT. S-"IV"
W9	#5	4	4	SEE SHT. S-"IV"
X9	#3	85	85	SEE SHT. S-"IV"
Y9	#6	2	2	SEE SHT. S-"IV"
Y9A	#6	2	2	SEE SHT. S-"IV"

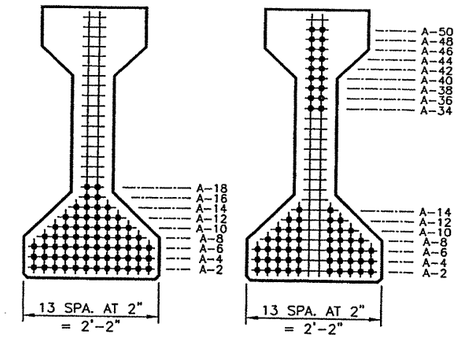

CL. SECTION END SECTION

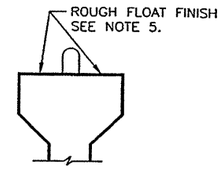

BEAM FINISH

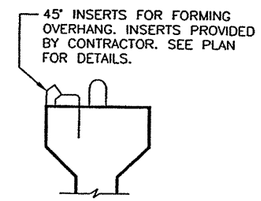

TOP FLANGE INSERTS
(SUPPLIED BY CONTRACTOR)

LO-LAX STRAND PATTERN

DESIGN REF. NO.	: SHEET 647
TOTAL STRAND QUANTITY	: 68
STRAND SIZE AND TYPE : 1/2" ø 270 ksi TO 31.0k	
ECCENTRICITY AT CL. (IN.)	: 17.40
ECCENTRICITY AT END (IN.)	: 8.93
DEPRESSED QUANTITY AND LOC. (IN.)	: 18 AT A-50
RELEASE STRENGTH (PSI)	: 6684
MIN. 28 DAY STRENGTH (PSI)	: 8062
APPROX. UPLIFT FORCE (kips)	: 30.12

NOTES:

1) ALL UNANSWERED VERIFIES ARE CONSIDERED CORRECT.
2) ALL DIMENSIONS PERTAINING TO STRANDS AND REINFORCING BARS WILL BE CENTER TO CENTER.
3) FOR ALL DIMENSIONS AND DETAILS NOT SHOWN SEE STANDARD SHEET S-"IV".
4) CONTRACTOR TO CUT LIFTING LOOPS TO 2" AFTER ERECTION.
5) ALL BEAMS SHALL HAVE A ROUGH FLOATED FINISH AS SPECIFIED IN TxDOT'S "TEXAS STANDARD SPECIFICATIONS" ITEM 424.4.5.a.
6) ON BRIDGE, BEAMS TO BE PLACED AS MARKS ARE SHOW ON ERECTION SHEETS. ON FABRICATION SHEETS, BEAMS ARE DETAILED WITH MARKS ON LEFT SIDE.

TOTAL QUANTITY OF 45° INSERTS FOR OVERHANG, SUPPLIED BY CONTRACTOR, ON THIS SHEET = 39

BEAM TYPE = "IV"
BEAM MARK = IV-3
TOTAL BEAMS ON THIS SHEET = 1
TOTAL LINEAR FOOTAGE THIS SHEET = 114.75'

FABRICATOR: BEXAR CONCRETE WORKS I, LTD.

CONTRACTOR: SUMMIT CONTRACTING, INC.

SHOP PLANS WERE PREPARED BY: BEXAR CONCRETE WORKS I, LTD.

STATE DISTRICT	FEDERAL REGION	STATE	FEDERAL AID PROJECT NO.			
LAREDO	6	TEXAS	NH-2002 (79)			
COUNTY			CONTROL	SECTION	JOB	HIGHWAY
WEBB			0018	05	062,ETC.	IH 35

JOB. NO.	DRAWN BY	CHECKED BY	DATE OUT	SHEET NO.
2509	MJR	JDH	02-20-04	IV-3

FABRICATION SHEET

2509IV3.DWG

SHEET NO. 670 X

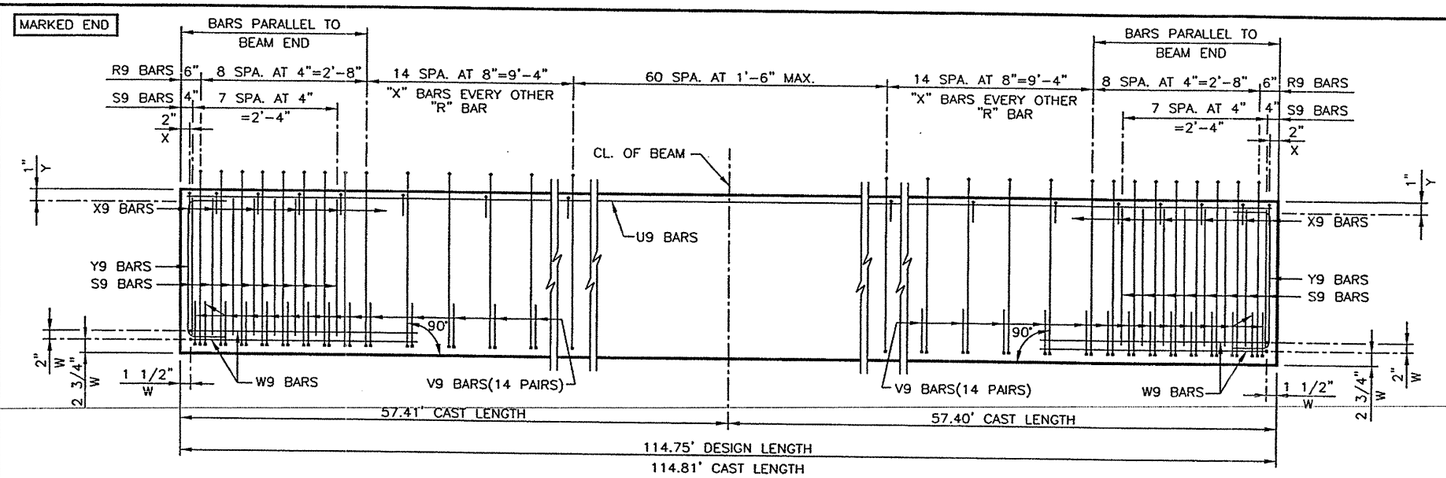

BEAM ELEVATION (REINF.)

REINFORCING STEEL TABLE				
BAR MARK	BAR SIZE	TOTAL QUANTITY PER BM.	TOTAL QUANTITY PER SHT.	BAR LENGTH
R9	#4	105	105	SEE SHT. S-"IV"
S9	#7	32	32	SEE SHT. S-"IV"
U9	#5	2	2	114'-7"
V9	#4	56	56	SEE SHT. S-"IV"
W9	#5	4	4	SEE SHT. S-"IV"
X9	#3	85	85	SEE SHT. S-"IV"
Y9	#6	4	4	SEE SHT. S-"IV"

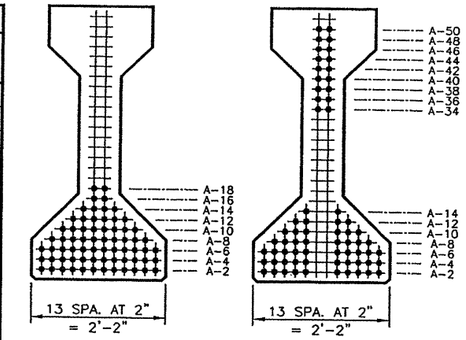

CL. SECTION END SECTION

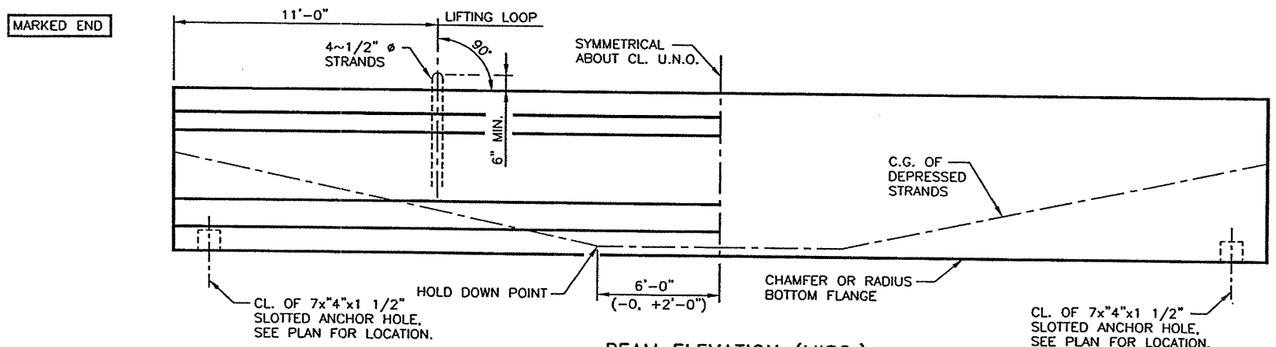

BEAM ELEVATION (MISC.)

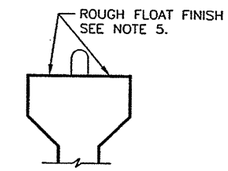

BEAM FINISH

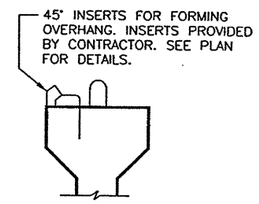

TOP FLANGE INSERTS
(SUPPLIED BY CONTRACTOR)

LO-LAX STRAND PATTERN	
DESIGN REF. NO.	: SHEET 647
TOTAL STRAND QUANTITY	: 68
STRAND SIZE AND TYPE : 1/2" ø 270 ksi TO 31.0k	
ECCENTRICITY AT CL. (IN.)	: 17.40
ECCENTRICITY AT END (IN.)	: 8.93
DEPRESSED QUANTITY AND LOC. (IN.)	: 18 AT A-50
RELEASE STRENGTH (PSI)	: 6684
MIN. 28 DAY STRENGTH (PSI)	: 8062
APPROX. UPLIFT FORCE (kips)	: 30.12

NOTES:

1) ALL UNANSWERED VERIFIES ARE CONSIDERED CORRECT.
2) ALL DIMENSIONS PERTAINING TO STRANDS AND REINFORCING BARS WILL BE CENTER TO CENTER.
3) FOR ALL DIMENSIONS AND DETAILS NOT SHOWN SEE STANDARD SHEET S-"IV".
4) CONTRACTOR TO CUT LIFTING LOOPS TO 2" AFTER ERECTION.
5) ALL BEAMS SHALL HAVE A ROUGH FLOATED FINISH AS SPECIFIED IN TxDOT'S "TEXAS STANDARD SPECIFICATIONS" ITEM 424.4.5.a.
6) ON BRIDGE, BEAMS TO BE PLACED AS MARKS ARE SHOW ON ERECTION SHEETS. ON FABRICATION SHEETS, BEAMS ARE DETAILED WITH MARKS ON LEFT SIDE.

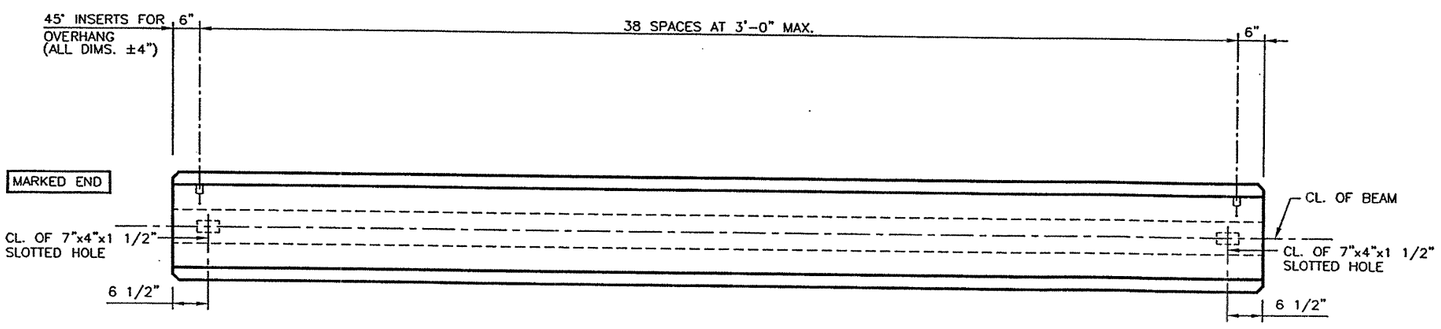

NO SKEW

BEAM PLAN

NO SKEW

TOTAL QUANTITY OF 45° INSERTS FOR OVERHANG, SUPPLIED BY CONTRACTOR, ON THIS SHEET = 39

BEAM TYPE = "IV"
BEAM MARK = IV-4
TOTAL BEAMS ON THIS SHEET = 1
TOTAL LINEAR FOOTAGE THIS SHEET = 114.75'

FABRICATOR: BEXAR CONCRETE WORKS I, LTD.

CONTRACTOR: SUMMIT CONTRACTING, INC.

SHOP PLANS WERE PREPARED BY: BEXAR CONCRETE WORKS I, LTD.

STATE DISTRICT	FEDERAL REGION	STATE	FEDERAL AID PROJECT NO.			
LAREDO	6	TEXAS	NH-2002 (79)			
COUNTY			CONTROL	SECTION	JOB	HIGHWAY
WEBB			0018	05	062,ETC.	IH 35

JOB. NO.	DRAWN BY	CHECKED BY	DATE OUT	SHEET NO.
2509	MJR	JDH	02-20-04	IV-4

FABRICATION SHEET

2509IV4.DWG

SHEET NO. 670 Y

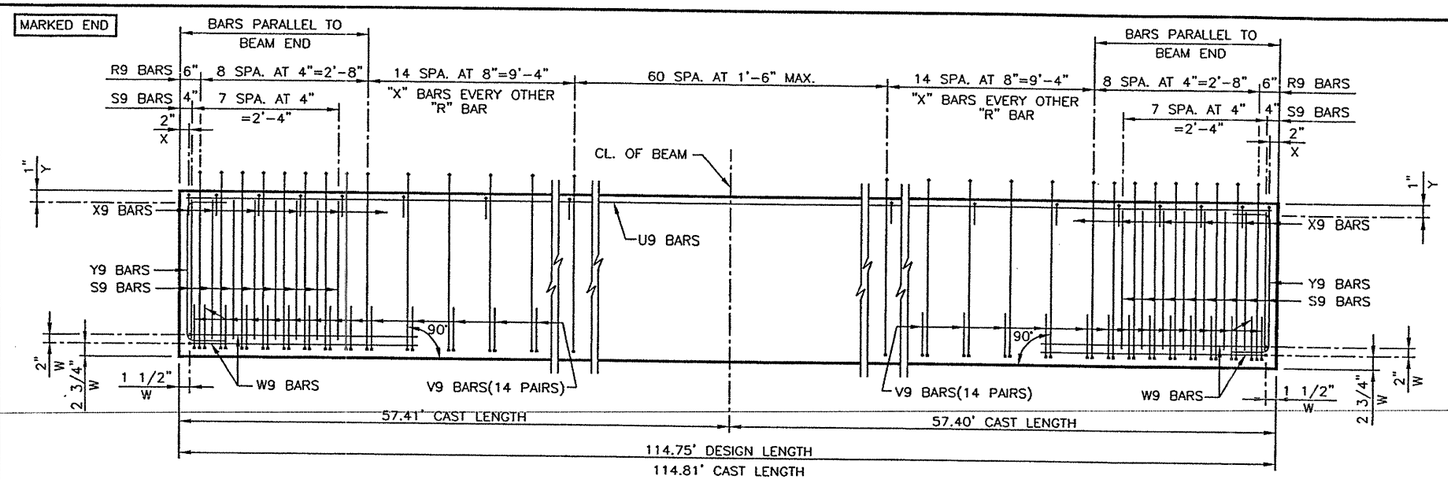

BEAM ELEVATION (REINF.)

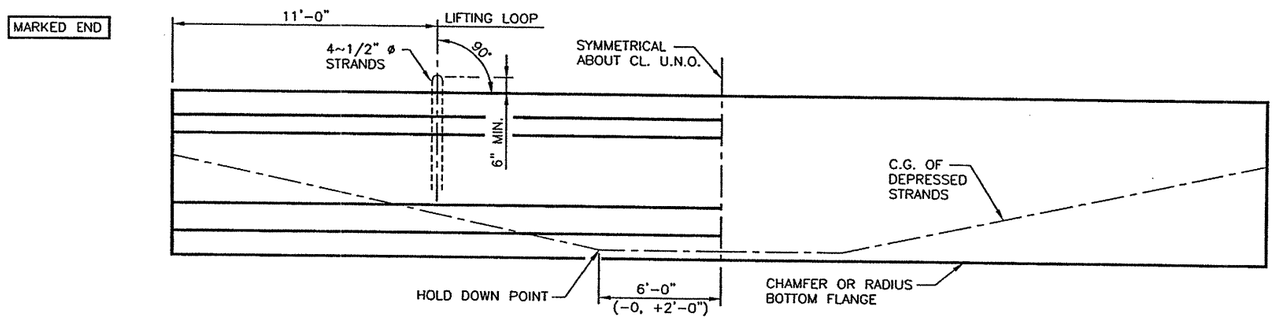

BEAM ELEVATION (MISC.)

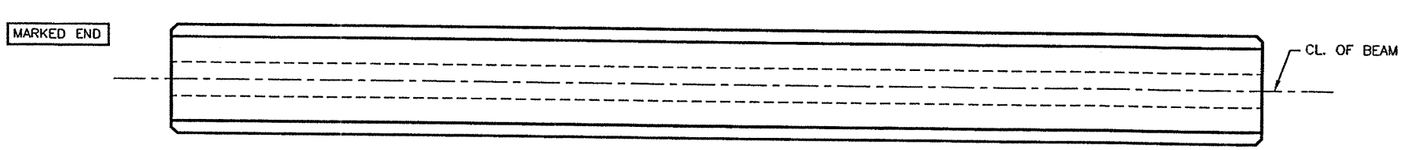

NO SKEW

BEAM PLAN

NO SKEW

REINFORCING STEEL TABLE				
BAR MARK	BAR SIZE	TOTAL QUANTITY PER BM.	TOTAL QUANTITY PER SHT.	BAR LENGTH
R9	#4	105	420	SEE SHT. S-"IV"
S9	#7	32	128	SEE SHT. S-"IV"
U9	#5	2	8	114'-7"
V9	#4	56	224	SEE SHT. S-"IV"
W9	#5	4	16	SEE SHT. S-"IV"
X9	#3	85	340	SEE SHT. S-"IV"
Y9	#6	4	16	SEE SHT. S-"IV"

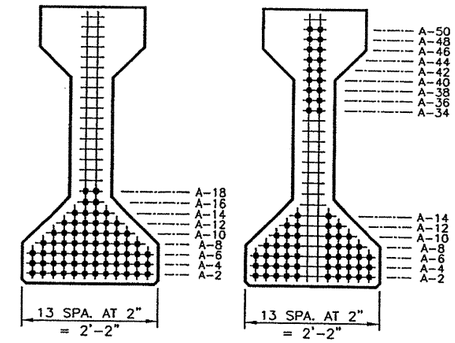

CL. SECTION END SECTION

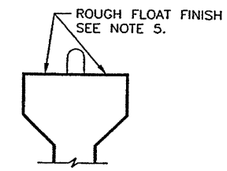

BEAM FINISH

LO-LAX STRAND PATTERN	
DESIGN REF. NO.	: SHEET 647
TOTAL STRAND QUANTITY	: 68
STRAND SIZE AND TYPE	: 1/2" ø 270 ksi TO 31.0k
ECCENTRICITY AT CL. (IN.)	: 17.40
ECCENTRICITY AT END (IN.)	: 8.93
DEPRESSED QUANTITY AND LOC. (IN.)	: 18 AT A-50
RELEASE STRENGTH (PSI)	: 6684
MIN. 28 DAY STRENGTH (PSI)	: 8062
APPROX. UPLIFT FORCE (kips)	: 30.12

NOTES:

1) ALL UNANSWERED VERIFIES ARE CONSIDERED CORRECT.
2) ALL DIMENSIONS PERTAINING TO STRANDS AND REINFORCING BARS WILL BE CENTER TO CENTER.
3) FOR ALL DIMENSIONS AND DETAILS NOT SHOWN SEE STANDARD SHEET S-"IV".
4) CONTRACTOR TO CUT LIFTING LOOPS TO 2" AFTER ERECTION.
5) ALL BEAMS SHALL HAVE A ROUGH FLOATED FINISH AS SPECIFIED IN TxDOT'S "TEXAS STANDARD SPECIFICATIONS" ITEM 424.4.5.a.
6) ON BRIDGE, BEAMS TO BE PLACED AS MARKS ARE SHOW ON ERECTION SHEETS. ON FABRICATION SHEETS, BEAMS ARE DETAILED WITH MARKS ON LEFT SIDE.

BEAM TYPE = "IV"
BEAM MARK = IV-5
TOTAL BEAMS ON THIS SHEET = 4
TOTAL LINEAR FOOTAGE THIS SHEET = 459.00'

FABRICATOR: BEXAR CONCRETE WORKS I, LTD.

CONTRACTOR: SUMMIT CONTRACTING, INC.

SHOP PLANS WERE PREPARED BY: BEXAR CONCRETE WORKS I, LTD.

STATE DISTRICT	FEDERAL REGION	STATE	FEDERAL AID PROJECT NO.			
LAREDO	6	TEXAS	NH-2002 (79)			
COUNTY			CONTROL	SECTION	JOB	HIGHWAY
WEBB			0018	05	062,ETC.	IH 35
JOB. NO.	DRAWN BY	CHECKED BY	DATE OUT	SHEET NO.		
2509	MJR	JDH	02-20-04	IV-5		

FABRICATION SHEET

2509IV5.DWG

SHEET NO. 6702

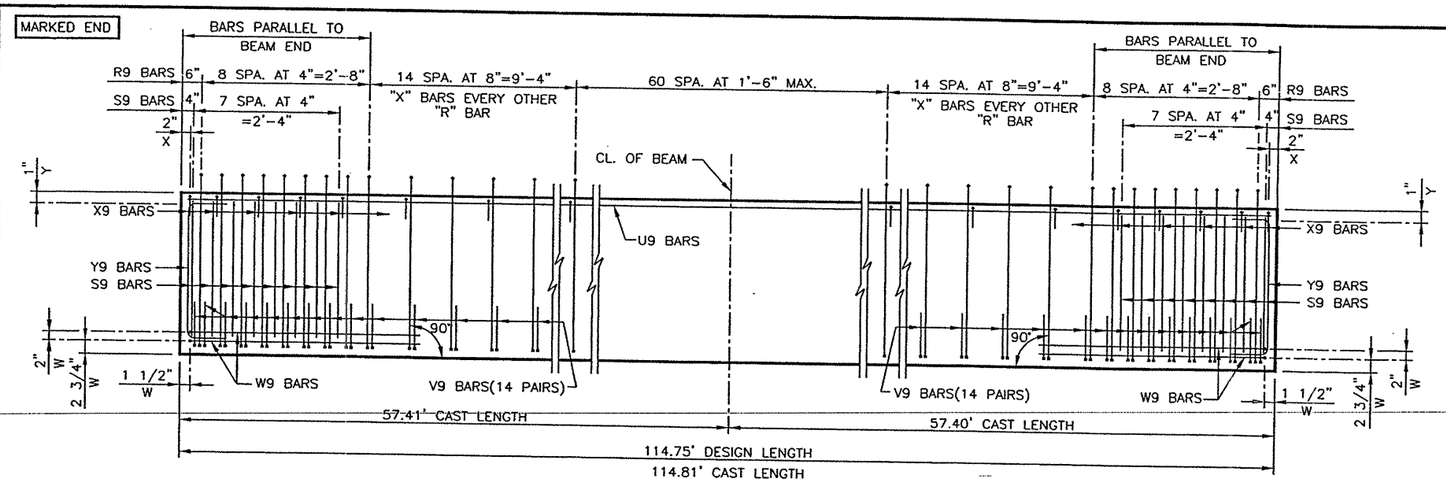

BEAM ELEVATION (REINF.)

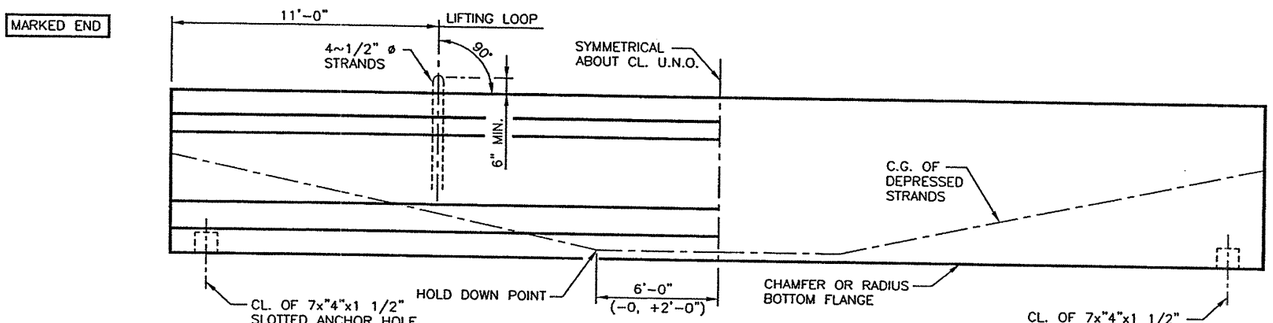

BEAM ELEVATION (MISC.)

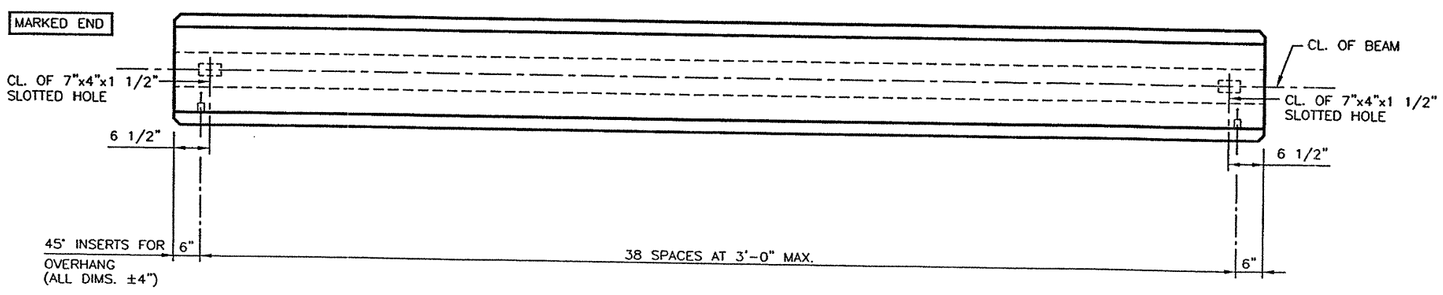

BEAM PLAN

REINFORCING STEEL TABLE

BAR MARK	BAR SIZE	TOTAL QUANTITY PER BM.	TOTAL QUANTITY PER SHT.	BAR LENGTH
R9	#4	105	105	SEE SHT. S-"IV"
S9	#7	32	32	SEE SHT. S-"IV"
U9	#5	2	2	114'-7"
V9	#4	56	56	SEE SHT. S-"IV"
W9	#5	4	4	SEE SHT. S-"IV"
X9	#3	85	85	SEE SHT. S-"IV"
Y9	#6	4	4	SEE SHT. S-"IV"

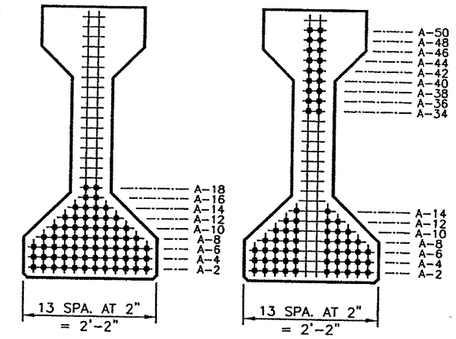

CL. SECTION END SECTION

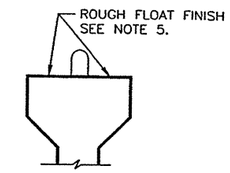

BEAM FINISH

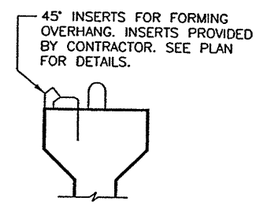

TOP FLANGE INSERTS
(SUPPLIED BY CONTRACTOR)

LO-LAX STRAND PATTERN

DESIGN REF. NO.	: SHEET 647
TOTAL STRAND QUANTITY	: 68
STRAND SIZE AND TYPE	: 1/2" ø 270 ksi TO 31.0k
ECCENTRICITY AT CL. (IN.)	: 17.40
ECCENTRICITY AT END (IN.)	: 8.93
DEPRESSED QUANTITY AND LOC. (IN.)	: 18 AT A-50
RELEASE STRENGTH (PSI)	: 6684
MIN. 28 DAY STRENGTH (PSI)	: 8062
APPROX. UPLIFT FORCE (kips)	: 30.12

NOTES:

1) ALL UNANSWERED VERIFIES ARE CONSIDERED CORRECT.
2) ALL DIMENSIONS PERTAINING TO STRANDS AND REINFORCING BARS WILL BE CENTER TO CENTER.
3) FOR ALL DIMENSIONS AND DETAILS NOT SHOWN SEE STANDARD SHEET S-"IV".
4) CONTRACTOR TO CUT LIFTING LOOPS TO 2" AFTER ERECTION.
5) ALL BEAMS SHALL HAVE A ROUGH FLOATED FINISH AS SPECIFIED IN TxDOT'S "TEXAS STANDARD SPECIFICATIONS" ITEM 424.4.5.a.
6) ON BRIDGE, BEAMS TO BE PLACED AS MARKS ARE SHOW ON ERECTION SHEETS. ON FABRICATION SHEETS, BEAMS ARE DETAILED WITH MARKS ON LEFT SIDE.

TOTAL QUANTITY OF 45° INSERTS FOR OVERHANG, SUPPLIED BY CONTRACTOR, ON THIS SHEET = 39

BEAM TYPE = "IV"
BEAM MARK = IV-6
TOTAL BEAMS ON THIS SHEET = 1
TOTAL LINEAR FOOTAGE THIS SHEET = 114.75'

FABRICATOR: BEXAR CONCRETE WORKS I, LTD.

CONTRACTOR: SUMMIT CONTRACTING, INC.

SHOP PLANS WERE PREPARED BY: BEXAR CONCRETE WORKS I, LTD.

STATE DISTRICT	FEDERAL REGION	STATE	FEDERAL AID PROJECT NO.			
LAREDO	6	TEXAS	NH-2002 (79)			
COUNTY			CONTROL	SECTION	JOB	HIGHWAY
WEBB			0018	05	062,ETC.	IH 35

JOB. NO.	DRAWN BY	CHECKED BY	DATE OUT	SHEET NO.
2509	MJR	JDH	02-20-04	IV-6

FABRICATION SHEET

2509IV6.DWG

SHEET NO. 670AA

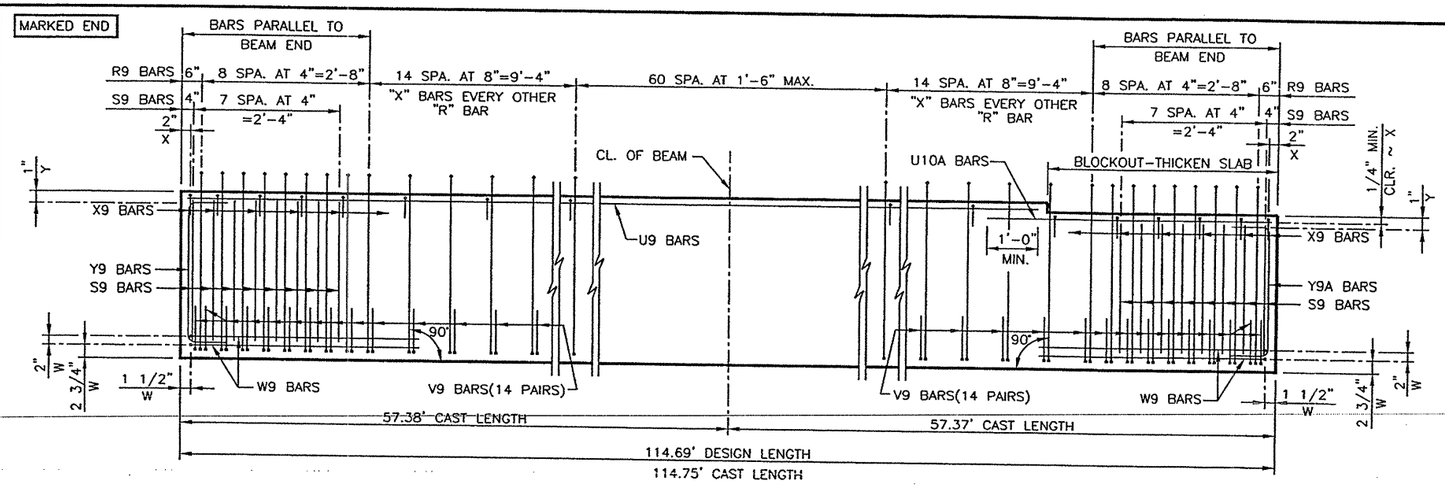

BEAM ELEVATION (REINF.)

REINFORCING STEEL TABLE				
BAR MARK	BAR SIZE	TOTAL QUANTITY PER BM.	TOTAL QUANTITY PER SHT.	BAR LENGTH
R9	#4	105	315	SEE SHT. S-"IV"
S9	#7	32	96	SEE SHT. S-"IV"
U9	#5	2	6	110'-8"
U10A	#5	2	6	6'-6"
V9	#4	56	168	SEE SHT. S-"IV"
W9	#5	4	12	SEE SHT. S-"IV"
X9	#3	85	255	SEE SHT. S-"IV"
Y9	#6	2	6	SEE SHT. S-"IV"
Y9A	#6	2	6	SEE SHT. S-"IV"

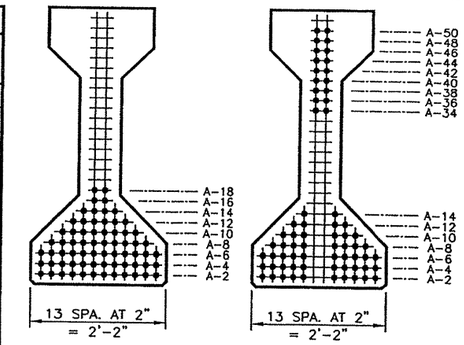

CL. SECTION END SECTION

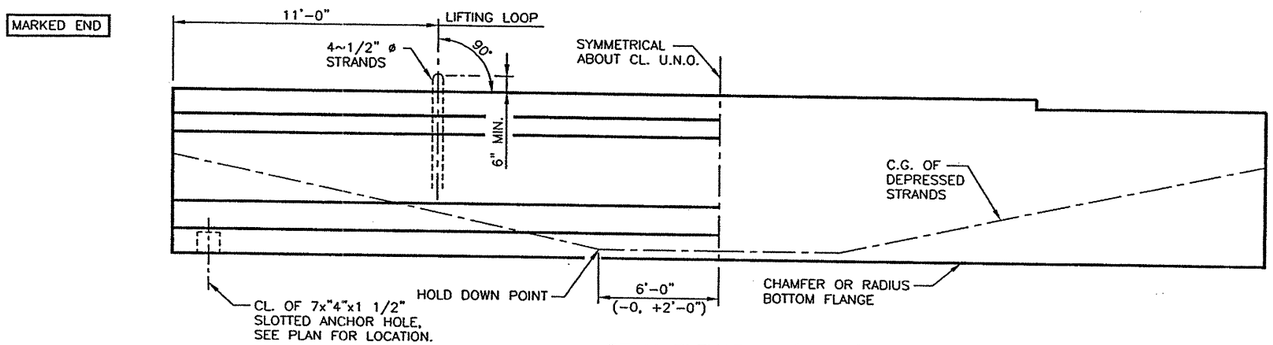

BEAM ELEVATION (MISC.)

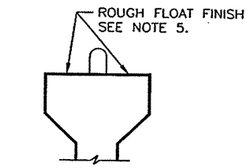

BEAM FINISH

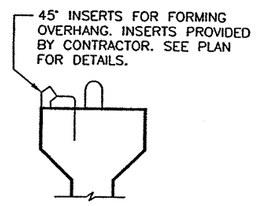

TOP FLANGE INSERTS
(SUPPLIED BY CONTRACTOR)

LO-LAX STRAND PATTERN	
DESIGN REF. NO.	: SHEET 647
TOTAL STRAND QUANTITY	: 68
STRAND SIZE AND TYPE : 1/2" ø 270 ksi TO 31.0k	
ECCENTRICITY AT CL. (IN.)	: 17.40
ECCENTRICITY AT END (IN.)	: 8.93
DEPRESSED QUANTITY AND LOC. (IN.)	: 18 AT A-50
RELEASE STRENGTH (PSI)	: 6684
MIN. 28 DAY STRENGTH (PSI)	: 8062
APPROX. UPLIFT FORCE (kips)	: 30.14

NOTES:

1) ALL UNANSWERED VERIFIES ARE CONSIDERED CORRECT.
2) ALL DIMENSIONS PERTAINING TO STRANDS AND REINFORCING BARS WILL BE CENTER TO CENTER.
3) FOR ALL DIMENSIONS AND DETAILS NOT SHOWN SEE STANDARD SHEET S-"IV".
4) CONTRACTOR TO CUT LIFTING LOOPS TO 2" AFTER ERECTION.
5) ALL BEAMS SHALL HAVE A ROUGH FLOATED FINISH AS SPECIFIED IN TxDOT'S "TEXAS STANDARD SPECIFICATIONS" ITEM 424.4.5.a.
6) ON BRIDGE, BEAMS TO BE PLACED AS MARKS ARE SHOW ON ERECTION SHEETS. ON FABRICATION SHEETS, BEAMS ARE DETAILED WITH MARKS ON LEFT SIDE.

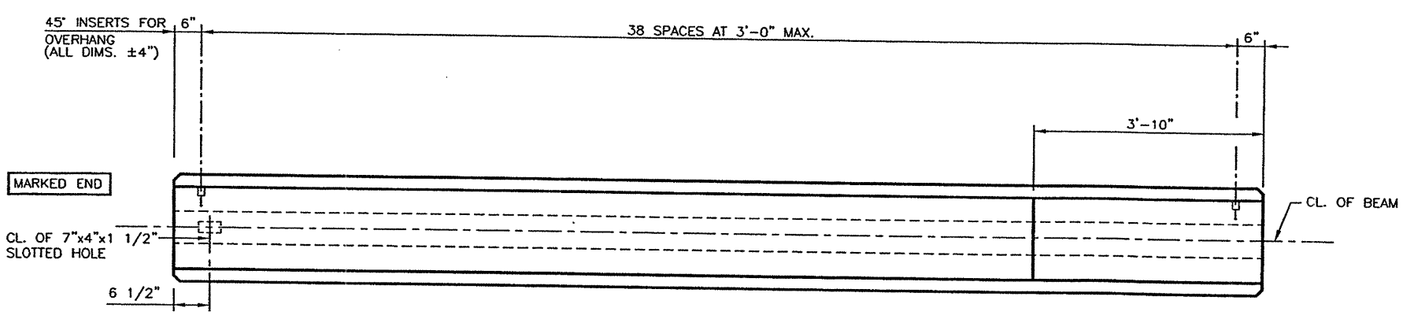

NO SKEW

BEAM PLAN

NO SKEW

TOTAL QUANTITY OF 45° INSERTS FOR OVERHANG, SUPPLIED BY CONTRACTOR, ON THIS SHEET = 117

BEAM TYPE = "IV"
BEAM MARK = IV-7
TOTAL BEAMS ON THIS SHEET = 3
TOTAL LINEAR FOOTAGE THIS SHEET = 344.07'

FABRICATOR: BEXAR CONCRETE WORKS I, LTD.

CONTRACTOR: SUMMIT CONTRACTING, INC.

SHOP PLANS WERE PREPARED BY: BEXAR CONCRETE WORKS I, LTD.

STATE DISTRICT	FEDERAL REGION	STATE	FEDERAL AID PROJECT NO.			
LAREDO	6	TEXAS	NH-2002 (79)			
COUNTY			CONTROL	SECTION	JOB	HIGHWAY
WEBB			0018	05	062,ETC.	IH 35

JOB. NO.	DRAWN BY	CHECKED BY	DATE OUT	SHEET NO.
2509	MJR	JDH	02-20-04	IV-7

FABRICATION SHEET

2509IV7.DWG

SHEET NO. 67088

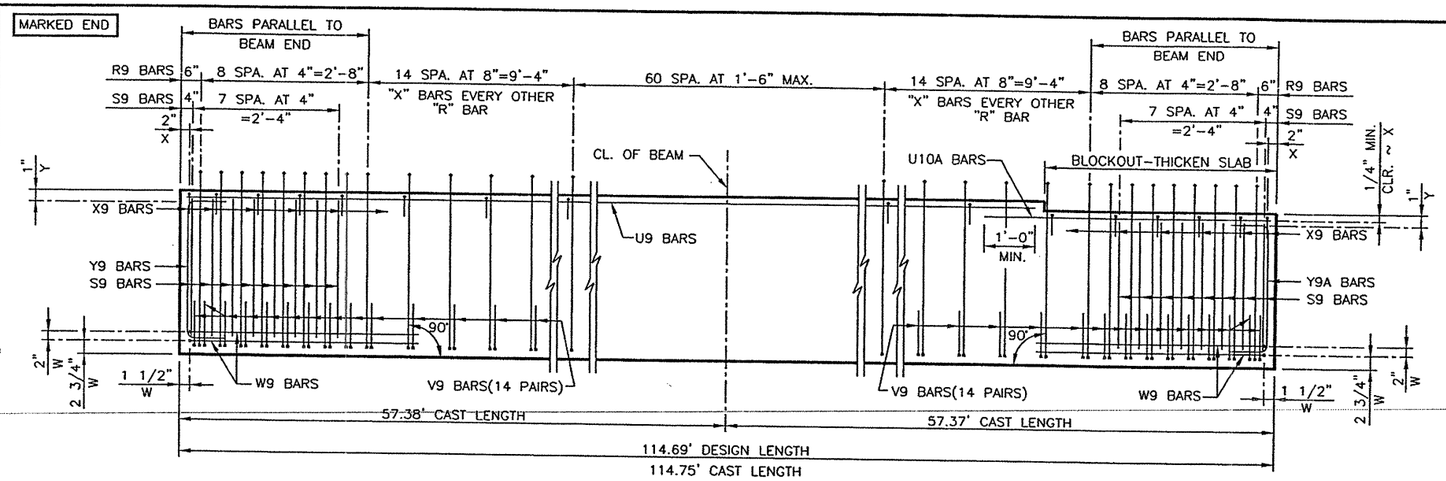

BEAM ELEVATION (REINF.)

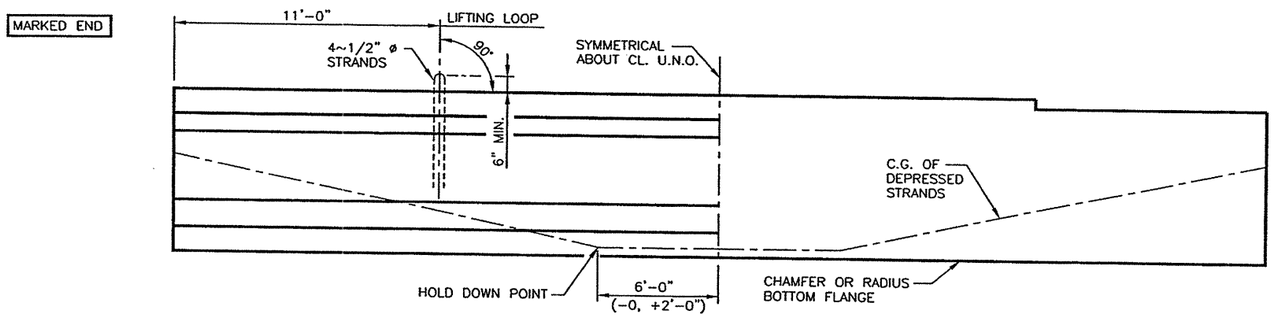

BEAM ELEVATION (MISC.)

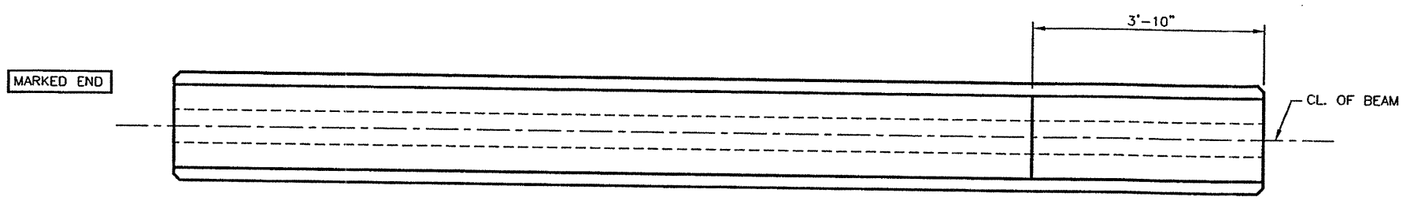

NO SKEW

BEAM PLAN

NO SKEW

REINFORCING STEEL TABLE

BAR MARK	BAR SIZE	TOTAL QUANTITY PER BM.	TOTAL QUANTITY PER SHT.	BAR LENGTH
R9	#4	105	1260	SEE SHT. S-"IV"
S9	#7	32	384	SEE SHT. S-"IV"
U9	#5	2	24	110'-8"
U10A	#5	2	24	6'-6"
V9	#4	56	672	SEE SHT. S-"IV"
W9	#5	4	48	SEE SHT. S-"IV"
X9	#3	85	1020	SEE SHT. S-"IV"
Y9	#6	2	24	SEE SHT. S-"IV"
Y9A	#6	2	24	SEE SHT. S-"IV"

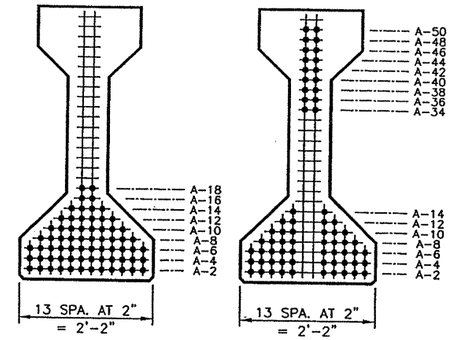

CL. SECTION END SECTION

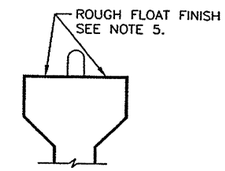

BEAM FINISH

LO-LAX STRAND PATTERN

DESIGN REF. NO.	: SHEET 647
TOTAL STRAND QUANTITY	: 68
STRAND SIZE AND TYPE : 1/2" ø 270 ksi TO 31.0k	
ECCENTRICITY AT CL. (IN.)	: 17.40
ECCENTRICITY AT END (IN.)	: 8.93
DEPRESSED QUANTITY AND LOC. (IN.)	: 18 AT A-50
RELEASE STRENGTH (PSI)	: 6684
MIN. 28 DAY STRENGTH (PSI)	: 8062
APPROX. UPLIFT FORCE (kips)	: 30.14

NOTES:

1) ALL UNANSWERED VERIFIES ARE CONSIDERED CORRECT.
2) ALL DIMENSIONS PERTAINING TO STRANDS AND REINFORCING BARS WILL BE CENTER TO CENTER.
3) FOR ALL DIMENSIONS AND DETAILS NOT SHOWN SEE STANDARD SHEET S-"IV".
4) CONTRACTOR TO CUT LIFTING LOOPS TO 2" AFTER ERECTION.
5) ALL BEAMS SHALL HAVE A ROUGH FLOATED FINISH AS SPECIFIED IN TxDOT'S "TEXAS STANDARD SPECIFICATIONS" ITEM 424.4.5.a.
6) ON BRIDGE, BEAMS TO BE PLACED AS MARKS ARE SHOW ON ERECTION SHEETS. ON FABRICATION SHEETS, BEAMS ARE DETAILED WITH MARKS ON LEFT SIDE.

BEAM TYPE = "IV"
BEAM MARK = IV-8
TOTAL BEAMS ON THIS SHEET = 12
TOTAL LINEAR FOOTAGE THIS SHEET = 1,376.28'

FABRICATOR: BEXAR CONCRETE WORKS I, LTD.

CONTRACTOR: SUMMIT CONTRACTING, INC.

SHOP PLANS WERE PREPARED BY: BEXAR CONCRETE WORKS I, LTD.

STATE DISTRICT	FEDERAL REGION	STATE	FEDERAL AID PROJECT NO.
LAREDO	6	TEXAS	NH-2002 (79)

COUNTY	CONTROL	SECTION	JOB	HIGHWAY
WEBB	0018	05	062,ETC.	IH 35

JOB. NO.	DRAWN BY	CHECKED BY	DATE OUT	SHEET NO.
2509	MJR	JDH	02-20-04	IV-8

FABRICATION SHEET

2509IV8.DWG

SHEET NO. 670 CC

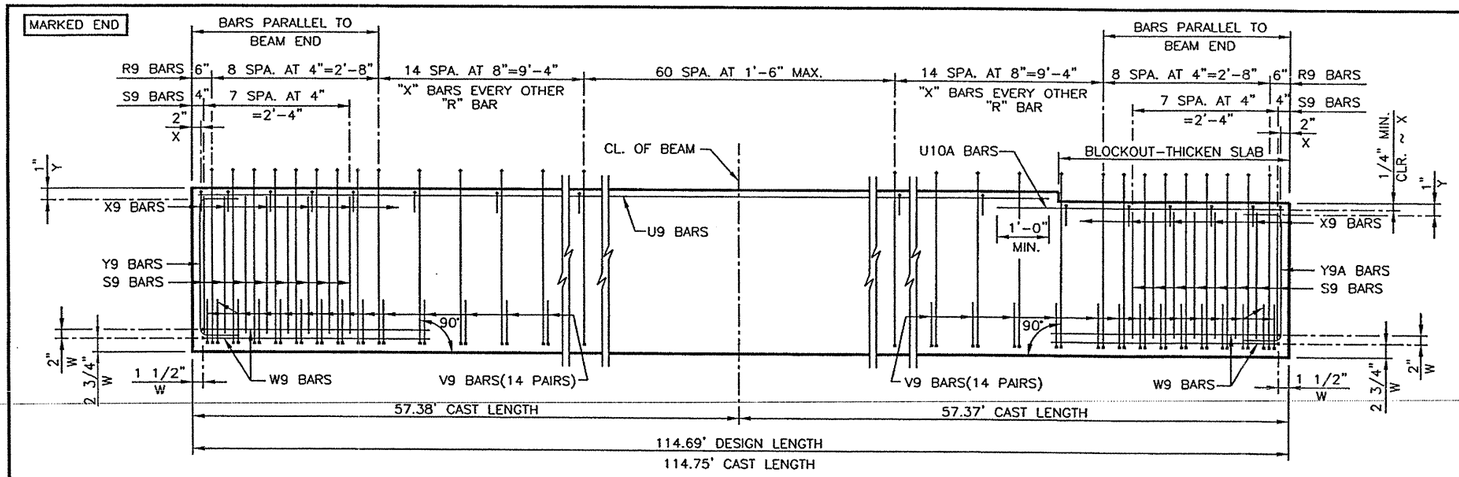

BEAM ELEVATION (REINF.)

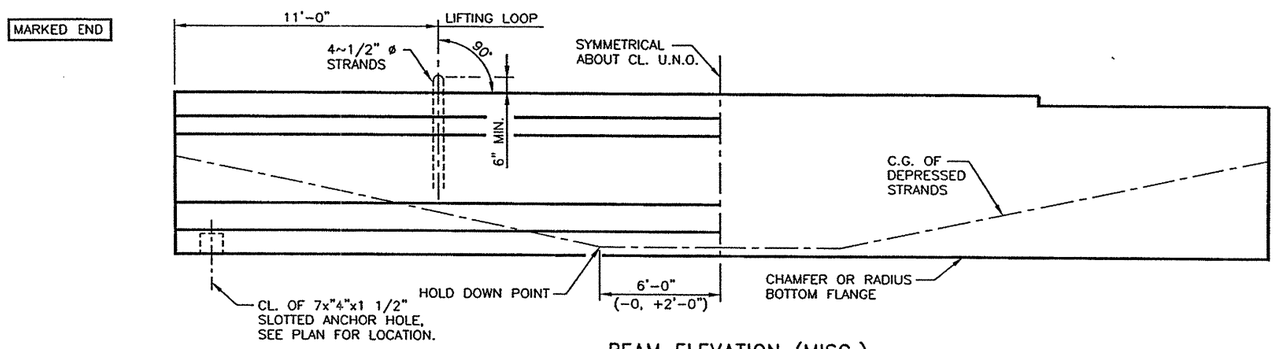

BEAM ELEVATION (MISC.)

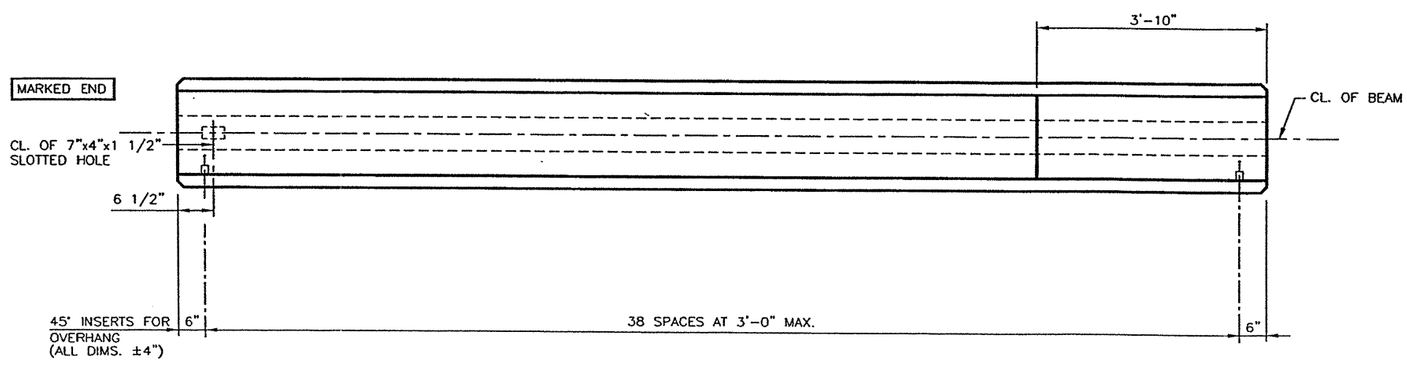

BEAM PLAN

REINFORCING STEEL TABLE

BAR MARK	BAR SIZE	TOTAL QUANTITY PER BM.	TOTAL QUANTITY PER SHT.	BAR LENGTH
R9	#4	105	315	SEE SHT. S-"IV"
S9	#7	32	96	SEE SHT. S-"IV"
U9	#5	2	6	110'-8"
U10A	#5	2	6	6'-6"
V9	#4	56	168	SEE SHT. S-"IV"
W9	#5	4	12	SEE SHT. S-"IV"
X9	#3	85	255	SEE SHT. S-"IV"
Y9	#6	2	6	SEE SHT. S-"IV"
Y9A	#6	2	6	SEE SHT. S-"IV"

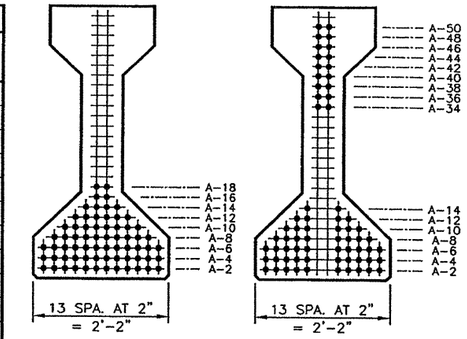

CL. SECTION END SECTION

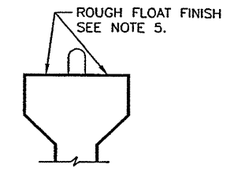

BEAM FINISH

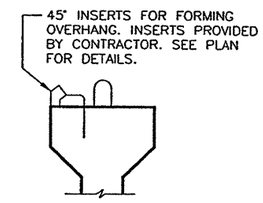

TOP FLANGE INSERTS
(SUPPLIED BY CONTRACTOR)

LO-LAX STRAND PATTERN

DESIGN REF. NO.	: SHEET 647
TOTAL STRAND QUANTITY	: 68
STRAND SIZE AND TYPE : 1/2" ø 270 ksi TO 31.0k	
ECCENTRICITY AT CL. (IN.)	: 17.40
ECCENTRICITY AT END (IN.)	: 8.93
DEPRESSED QUANTITY AND LOC. (IN.)	: 18 AT A-50
RELEASE STRENGTH (PSI)	: 6684
MIN. 28 DAY STRENGTH (PSI)	: 8062
APPROX. UPLIFT FORCE (kips)	: 30.14

NOTES:

1) ALL UNANSWERED VERIFIES ARE CONSIDERED CORRECT.
2) ALL DIMENSIONS PERTAINING TO STRANDS AND REINFORCING BARS WILL BE CENTER TO CENTER.
3) FOR ALL DIMENSIONS AND DETAILS NOT SHOWN SEE STANDARD SHEET S-"IV".
4) CONTRACTOR TO CUT LIFTING LOOPS TO 2" AFTER ERECTION.
5) ALL BEAMS SHALL HAVE A ROUGH FLOATED FINISH AS SPECIFIED IN TxDOT'S "TEXAS STANDARD SPECIFICATIONS" ITEM 424.4.5.a.
6) ON BRIDGE, BEAMS TO BE PLACED AS MARKS ARE SHOW ON ERECTION SHEETS. ON FABRICATION SHEETS, BEAMS ARE DETAILED WITH MARKS ON LEFT SIDE.

TOTAL QUANTITY OF 45° INSERTS FOR OVERHANG, SUPPLIED BY CONTRACTOR, ON THIS SHEET = 117

BEAM TYPE = "IV"
BEAM MARK = IV-9
TOTAL BEAMS ON THIS SHEET = 3
TOTAL LINEAR FOOTAGE THIS SHEET = 344.07'

FABRICATOR:
BEXAR CONCRETE WORKS I, LTD.

CONTRACTOR:
SUMMIT CONTRACTING, INC.

SHOP PLANS WERE PREPARED BY:
BEXAR CONCRETE WORKS I, LTD.

STATE DISTRICT	FEDERAL REGION	STATE	FEDERAL AID PROJECT NO.			
LAREDO	6	TEXAS	NH-2002 (79)			
COUNTY			CONTROL	SECTION	JOB	HIGHWAY
WEBB			0018	05	062,ETC.	IH 35

JOB. NO.	DRAWN BY	CHECKED BY	DATE OUT	SHEET NO.
2509	MJR	JDH	02-20-04	IV-9

FABRICATION SHEET

2509IV9.DWG

SHEET NO. 670 DD

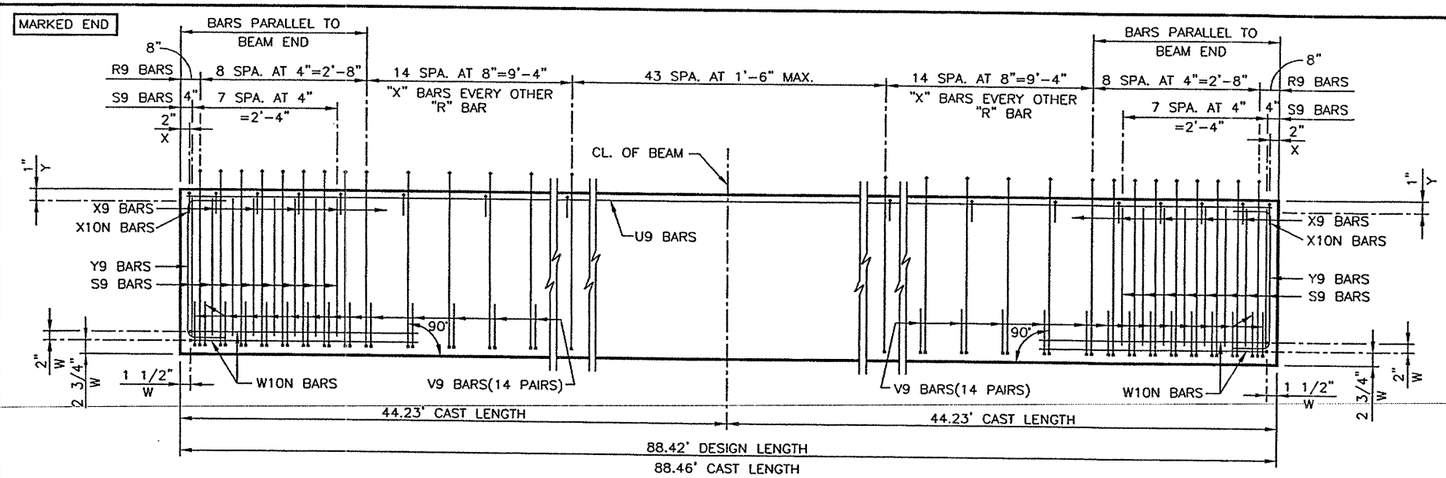

BEAM ELEVATION (REINF.)

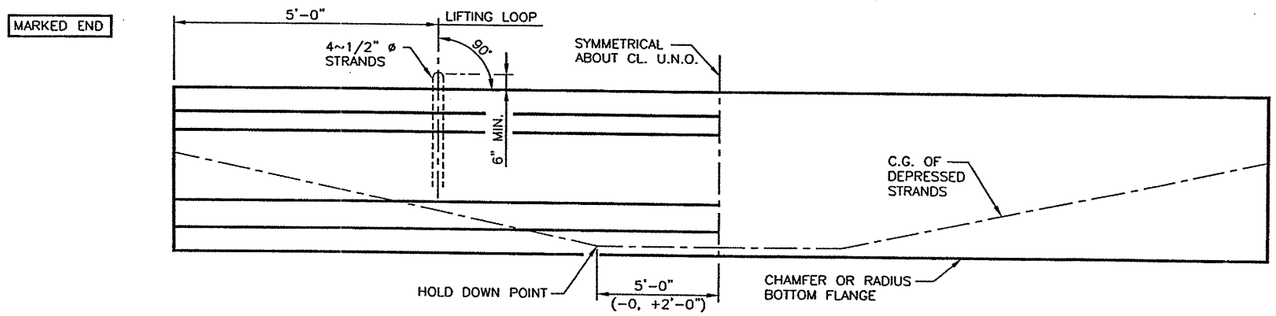

BEAM ELEVATION (MISC.)

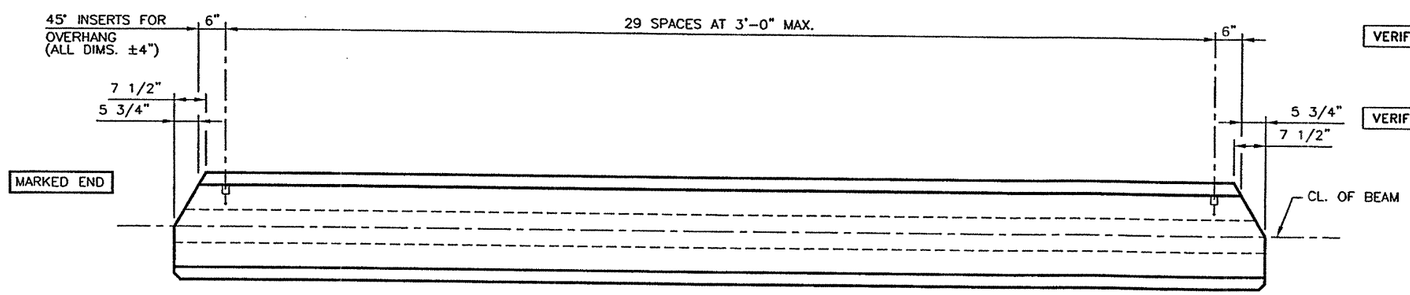

+30.00 DEGREE SKEW

BEAM PLAN

-30.00 DEGREE SKEW

REINFORCING STEEL TABLE

BAR MARK	BAR SIZE	TOTAL QUANTITY PER BM.	TOTAL QUANTITY PER SHT.	BAR LENGTH
R9	#4	88	88	SEE SHT. S-"IV"
S9	#7	32	32	SEE SHT. S-"IV"
U9	#5	2	2	88'-3"
V9	#4	56	56	SEE SHT. S-"IV"
W10N	#5	4	4	SEE SHT. S-"IV"
X9	#3	66	66	SEE SHT. S-"IV"
X10N	#3	2	2	SEE SHT. S-"IV"
Y9	#6	4	4	SEE SHT. S-"IV"

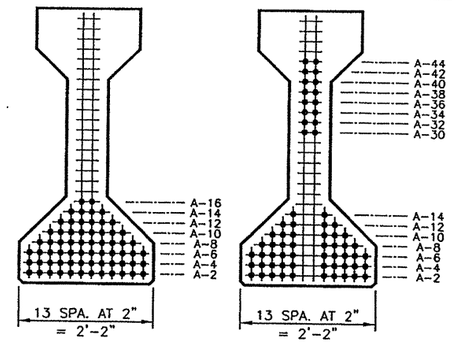

CL. SECTION END SECTION

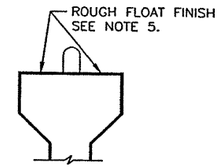

BEAM FINISH

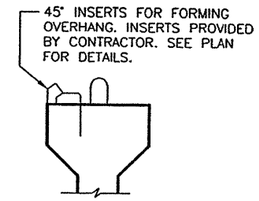

TOP FLANGE INSERTS
(SUPPLIED BY CONTRACTOR)

LO-LAX STRAND PATTERN

DESIGN REF. NO.	: SHEET 647
TOTAL STRAND QUANTITY	: 66
STRAND SIZE AND TYPE : 1/2" ø 270 ksi TO 31.0k	
ECCENTRICITY AT CL. (IN.)	: 17.72
ECCENTRICITY AT END (IN.)	: 10.93
DEPRESSED QUANTITY AND LOC. (IN.)	: 16 AT A-44
RELEASE STRENGTH (PSI)	: 7112
MIN. 28 DAY STRENGTH (PSI)	: 7137
APPROX. UPLIFT FORCE (kips)	: 31.09

NOTES:

1) ALL UNANSWERED VERIFIES ARE CONSIDERED CORRECT.
2) ALL DIMENSIONS PERTAINING TO STRANDS AND REINFORCING BARS WILL BE CENTER TO CENTER.
3) FOR ALL DIMENSIONS AND DETAILS NOT SHOWN SEE STANDARD SHEET S-"IV".
4) CONTRACTOR TO CUT LIFTING LOOPS TO 2" AFTER ERECTION.
5) ALL BEAMS SHALL HAVE A ROUGH FLOATED FINISH AS SPECIFIED IN TxDOT'S "TEXAS STANDARD SPECIFICATIONS" ITEM 424.4.5.a.
6) ON BRIDGE, BEAMS TO BE PLACED AS MARKS ARE SHOW ON ERECTION SHEETS. ON FABRICATION SHEETS, BEAMS ARE DETAILED WITH MARKS ON LEFT SIDE.

VERIFY — NOTE: BEAM LENGTH PROVIDED IS AS PER PLANS. LENGTH SHOULD BE FIELD VERIFIED PRIOR TO APPROVAL AND IF NEEDED REVISED ON OUR SHOP PLANS.

VERIFY — NOTE: THIS BEAM WASN'T DETAILED WITH AN END DIAPHRAGM. PLANS SHOW BEAM TO BE LOWERED 2 INCHES INSTEAD, PLEASE VERIFY.

TOTAL QUANTITY OF 45° INSERTS FOR OVERHANG, SUPPLIED BY CONTRACTOR, ON THIS SHEET = 30

BEAM TYPE = "IV"
BEAM MARK = IV-10
TOTAL BEAMS ON THIS SHEET = 1
TOTAL LINEAR FOOTAGE THIS SHEET = 88.42'

FABRICATOR: BEXAR CONCRETE WORKS I, LTD.

CONTRACTOR: SUMMIT CONTRACTING, INC.

SHOP PLANS WERE PREPARED BY: BEXAR CONCRETE WORKS I, LTD.

STATE DISTRICT	FEDERAL REGION	STATE	FEDERAL AID PROJECT NO.			
LAREDO	6	TEXAS	NH-2002 (79)			
COUNTY			CONTROL	SECTION	JOB	HIGHWAY
WEBB			0018	05	062,ETC.	IH 35

JOB. NO.	DRAWN BY	CHECKED BY	DATE OUT	SHEET NO.
2509	MJR	JDH	02-20-04	IV-10

FABRICATION SHEET

2509IV10.DWG

SHEET NO. 670 EE

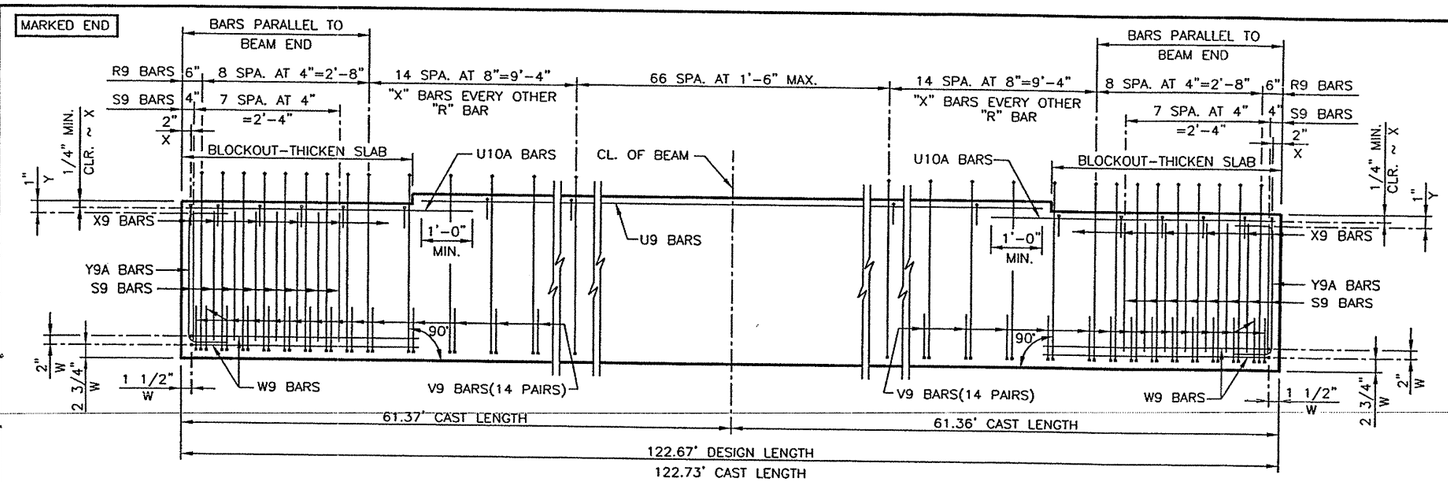

BEAM ELEVATION (REINF.)

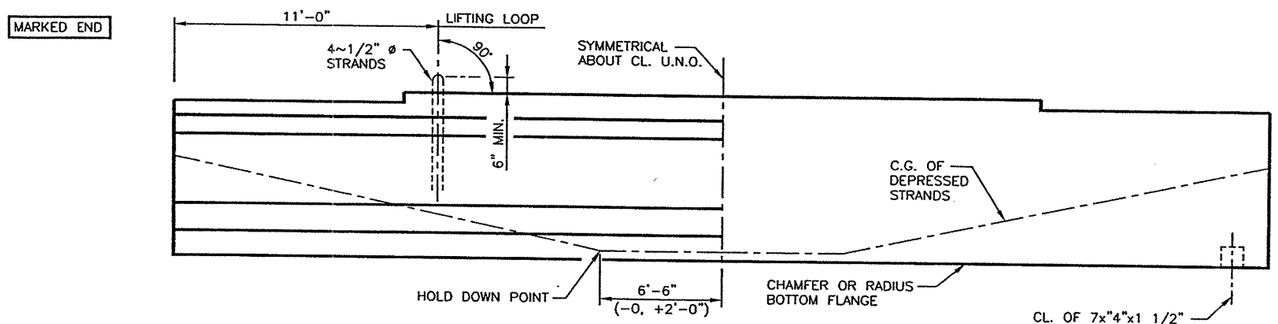

BEAM ELEVATION (MISC.)

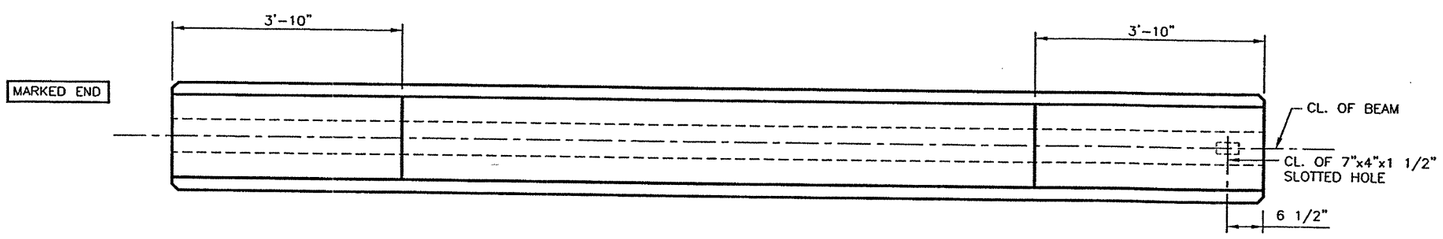

BEAM PLAN

REINFORCING STEEL TABLE

BAR MARK	BAR SIZE	TOTAL QUANTITY PER BM.	TOTAL QUANTITY PER SHT.	BAR LENGTH
R9	#4	111	111	SEE SHT. S-"IV"
S9	#7	32	32	SEE SHT. S-"IV"
U9	#5	2	2	114'-10"
U10A	#5	4	4	6'-6"
V9	#4	56	56	SEE SHT. S-"IV"
W9	#5	4	4	SEE SHT. S-"IV"
X9	#3	91	91	SEE SHT. S-"IV"
Y9A	#6	4	4	SEE SHT. S-"IV"

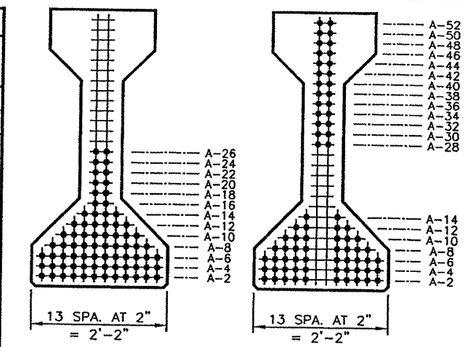

CL. SECTION END SECTION

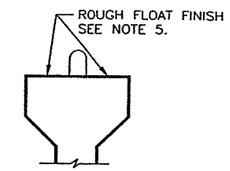

BEAM FINISH

LO-LAX STRAND PATTERN

DESIGN REF. NO.	: SHEET 647
TOTAL STRAND QUANTITY	: 76
STRAND SIZE AND TYPE : 1/2" ø 270 ksi TO 31.0k	
ECCENTRICITY AT CL. (IN.)	: 15.75
ECCENTRICITY AT END (IN.)	: 6.86
DEPRESSED QUANTITY AND LOC. (IN.)	: 26 AT A-52
RELEASE STRENGTH (PSI)	: 6847
MIN. 28 DAY STRENGTH (PSI)	: 9816
APPROX. UPLIFT FORCE (kips)	: 33.03

NOTES:

1) ALL UNANSWERED VERIFIES ARE CONSIDERED CORRECT.
2) ALL DIMENSIONS PERTAINING TO STRANDS AND REINFORCING BARS WILL BE CENTER TO CENTER.
3) FOR ALL DIMENSIONS AND DETAILS NOT SHOWN SEE STANDARD SHEET S-"IV".
4) CONTRACTOR TO CUT LIFTING LOOPS TO 2" AFTER ERECTION.
5) ALL BEAMS SHALL HAVE A ROUGH FLOATED FINISH AS SPECIFIED IN TxDOT'S "TEXAS STANDARD SPECIFICATIONS" ITEM 424.4.5.a.
6) ON BRIDGE, BEAMS TO BE PLACED AS MARKS ARE SHOW ON ERECTION SHEETS. ON FABRICATION SHEETS, BEAMS ARE DETAILED WITH MARKS ON LEFT SIDE.

BEAM TYPE = "IV"
BEAM MARK = IV-11
TOTAL BEAMS ON THIS SHEET = 1
TOTAL LINEAR FOOTAGE THIS SHEET = 122.67'

FABRICATOR: BEXAR CONCRETE WORKS I, LTD.

CONTRACTOR: SUMMIT CONTRACTING, INC.

SHOP PLANS WERE PREPARED BY: BEXAR CONCRETE WORKS I, LTD.

STATE DISTRICT	FEDERAL REGION	STATE	FEDERAL AID PROJECT NO.
LAREDO	6	TEXAS	NH-2002 (79)

COUNTY	CONTROL	SECTION	JOB	HIGHWAY
WEBB	0018	05	062,ETC.	IH 35

JOB. NO.	DRAWN BY	CHECKED BY	DATE OUT	SHEET NO.
2509	MJR	JDH	02-20-04	IV-11

FABRICATION SHEET

2509IV11.DWG

SHEET NO. 670 FF

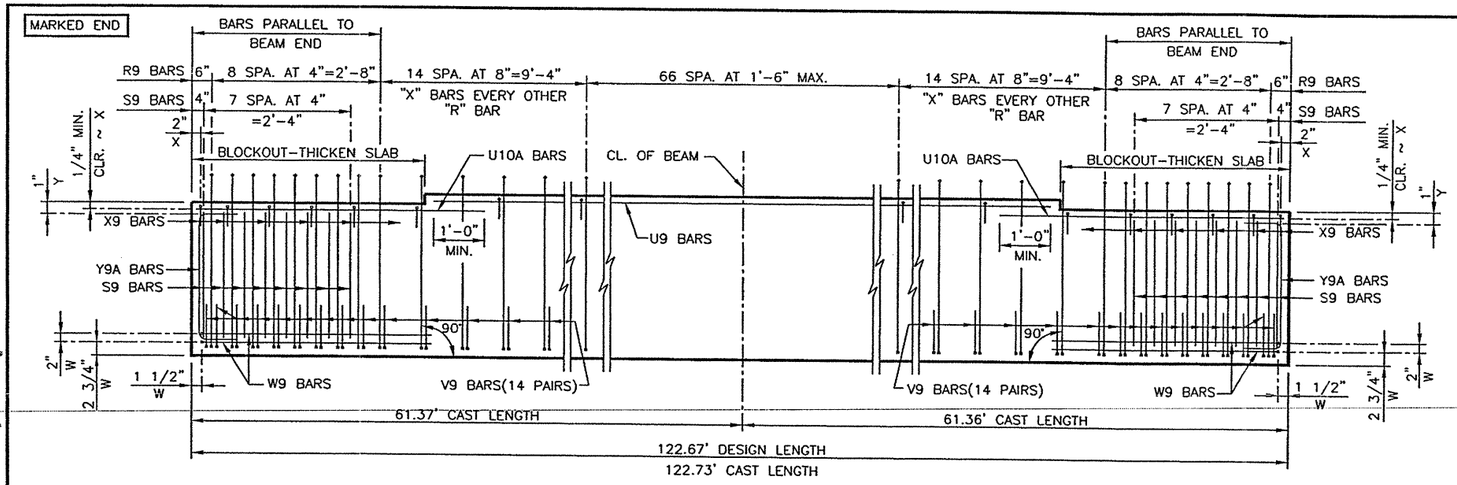

BEAM ELEVATION (REINF.)

REINFORCING STEEL TABLE				
BAR MARK	BAR SIZE	TOTAL QUANTITY PER BM.	TOTAL QUANTITY PER SHT.	BAR LENGTH
R9	#4	111	555	SEE SHT. S-"IV"
S9	#7	32	160	SEE SHT. S-"IV"
U9	#5	2	10	114'-10"
U10A	#5	4	20	6'-6"
V9	#4	56	280	SEE SHT. S-"IV"
W9	#5	4	20	SEE SHT. S-"IV"
X9	#3	91	455	SEE SHT. S-"IV"
Y9A	#6	4	20	SEE SHT. S-"IV"

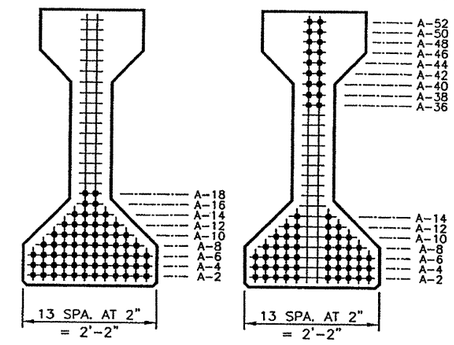

CL. SECTION END SECTION

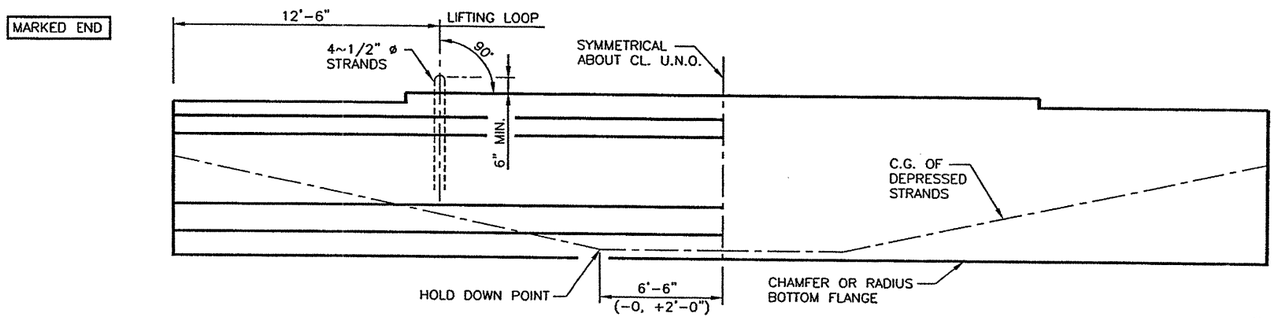

BEAM ELEVATION (MISC.)

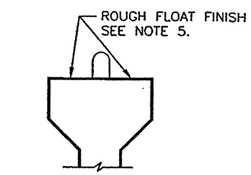

BEAM FINISH

LO-LAX STRAND PATTERN	
DESIGN REF. NO.	: SHEET 647
TOTAL STRAND QUANTITY	: 68
STRAND SIZE AND TYPE : 1/2" ø 270 ksi TO 31.0k	
ECCENTRICITY AT CL. (IN.)	: 17.40
ECCENTRICITY AT END (IN.)	: 8.40
DEPRESSED QUANTITY AND LOC. (IN.)	: 18 AT A-52
RELEASE STRENGTH (PSI)	: 6543
MIN. 28 DAY STRENGTH (PSI)	: 8682
APPROX. UPLIFT FORCE (kips)	: 29.91

NOTES:

1) ALL UNANSWERED VERIFIES ARE CONSIDERED CORRECT.
2) ALL DIMENSIONS PERTAINING TO STRANDS AND REINFORCING BARS WILL BE CENTER TO CENTER.
3) FOR ALL DIMENSIONS AND DETAILS NOT SHOWN SEE STANDARD SHEET S-"IV".
4) CONTRACTOR TO CUT LIFTING LOOPS TO 2" AFTER ERECTION.
5) ALL BEAMS SHALL HAVE A ROUGH FLOATED FINISH AS SPECIFIED IN TxDOT'S "TEXAS STANDARD SPECIFICATIONS" ITEM 424.4.5.a.
6) ON BRIDGE, BEAMS TO BE PLACED AS MARKS ARE SHOW ON ERECTION SHEETS. ON FABRICATION SHEETS, BEAMS ARE DETAILED WITH MARKS ON LEFT SIDE.

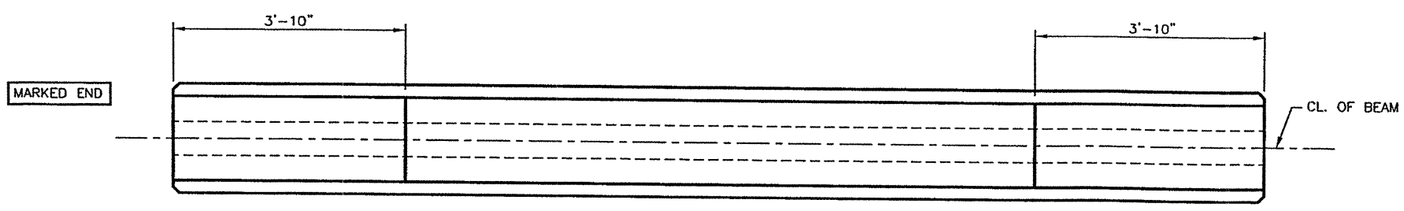

NO SKEW

BEAM PLAN

NO SKEW

2509IV12.DWG

BEAM TYPE = "IV"
BEAM MARK = IV-12
TOTAL BEAMS ON THIS SHEET = 5
TOTAL LINEAR FOOTAGE THIS SHEET = 613.35'

FABRICATOR: BEXAR CONCRETE WORKS I, LTD.

CONTRACTOR: SUMMIT CONTRACTING, INC.

SHOP PLANS WERE PREPARED BY: BEXAR CONCRETE WORKS I, LTD.

STATE DISTRICT	FEDERAL REGION	STATE	FEDERAL AID PROJECT NO.			
LAREDO	6	TEXAS	NH-2002 (79)			
COUNTY			CONTROL	SECTION	JOB	HIGHWAY
WEBB			0018	05	062,ETC.	IH 35

JOB. NO.	DRAWN BY	CHECKED BY	DATE OUT	SHEET NO.
2509	MJR	JDH	02-20-04	IV-12

FABRICATION SHEET

SHEET NO. 670 GG

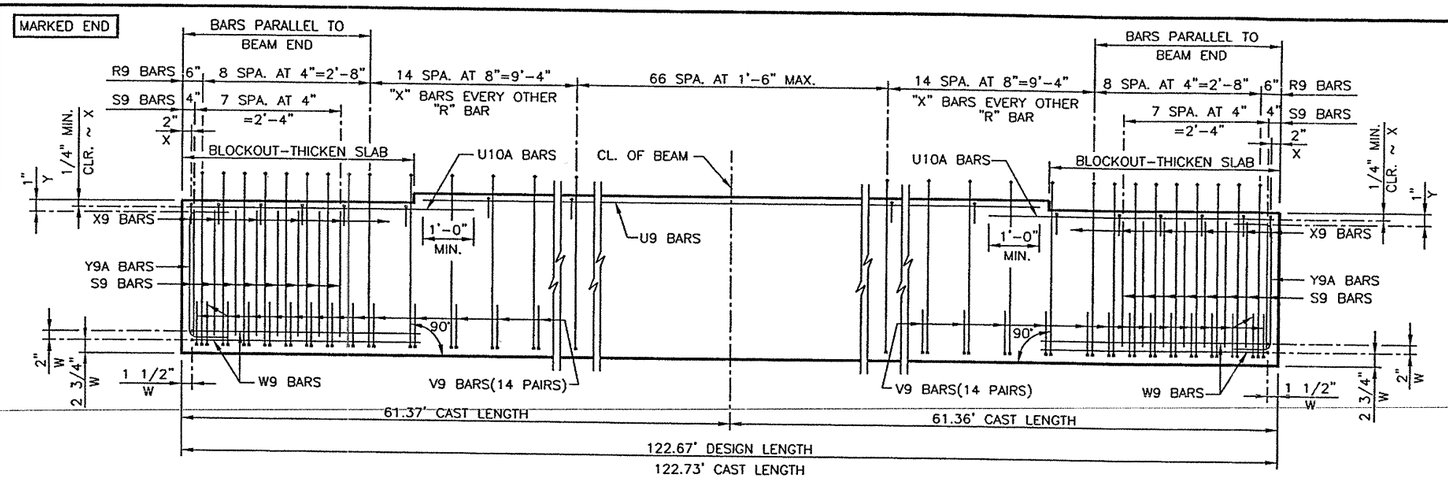

BEAM ELEVATION (REINF.)

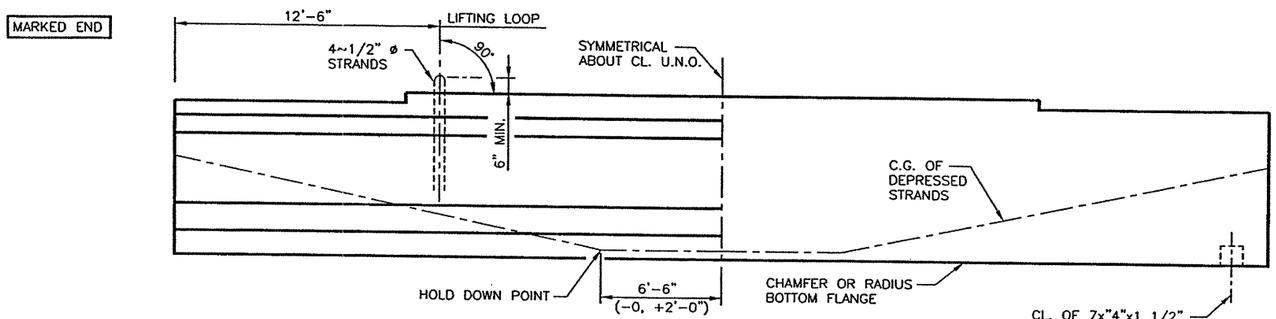

BEAM ELEVATION (MISC.)

REINFORCING STEEL TABLE				
BAR MARK	BAR SIZE	TOTAL QUANTITY PER BM.	TOTAL QUANTITY PER SHT.	BAR LENGTH
R9	#4	111	111	SEE SHT. S-"IV"
S9	#7	32	32	SEE SHT. S-"IV"
U9	#5	2	2	114'-10"
U10A	#5	4	4	6'-6"
V9	#4	56	56	SEE SHT. S-"IV"
W9	#5	4	4	SEE SHT. S-"IV"
X9	#3	91	91	SEE SHT. S-"IV"
Y9A	#6	4	4	SEE SHT. S-"IV"

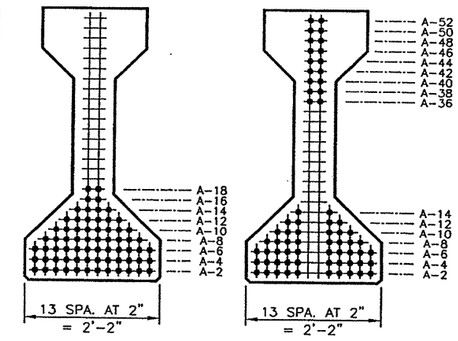

CL. SECTION END SECTION

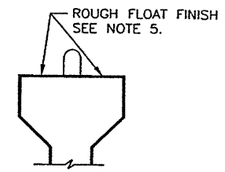

BEAM FINISH

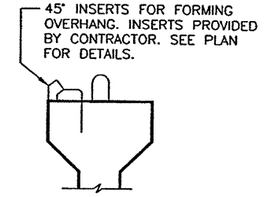

TOP FLANGE INSERTS
(SUPPLIED BY CONTRACTOR)

LO-LAX STRAND PATTERN	
DESIGN REF. NO.	: SHEET 647
TOTAL STRAND QUANTITY	: 68
STRAND SIZE AND TYPE	: 1/2" ø 270 ksi TO 31.0k
ECCENTRICITY AT CL. (IN.)	: 17.40
ECCENTRICITY AT END (IN.)	: 8.40
DEPRESSED QUANTITY AND LOC. (IN.)	: 18 AT A-52
RELEASE STRENGTH (PSI)	: 6543
MIN. 28 DAY STRENGTH (PSI)	: 8682
APPROX. UPLIFT FORCE (kips)	: 29.91

NOTES:

1) ALL UNANSWERED VERIFIES ARE CONSIDERED CORRECT.
2) ALL DIMENSIONS PERTAINING TO STRANDS AND REINFORCING BARS WILL BE CENTER TO CENTER.
3) FOR ALL DIMENSIONS AND DETAILS NOT SHOWN SEE STANDARD SHEET S-"IV".
4) CONTRACTOR TO CUT LIFTING LOOPS TO 2" AFTER ERECTION.
5) ALL BEAMS SHALL HAVE A ROUGH FLOATED FINISH AS SPECIFIED IN TxDOT'S "TEXAS STANDARD SPECIFICATIONS" ITEM 424.4.5.a.
6) ON BRIDGE, BEAMS TO BE PLACED AS MARKS ARE SHOW ON ERECTION SHEETS. ON FABRICATION SHEETS, BEAMS ARE DETAILED WITH MARKS ON LEFT SIDE.

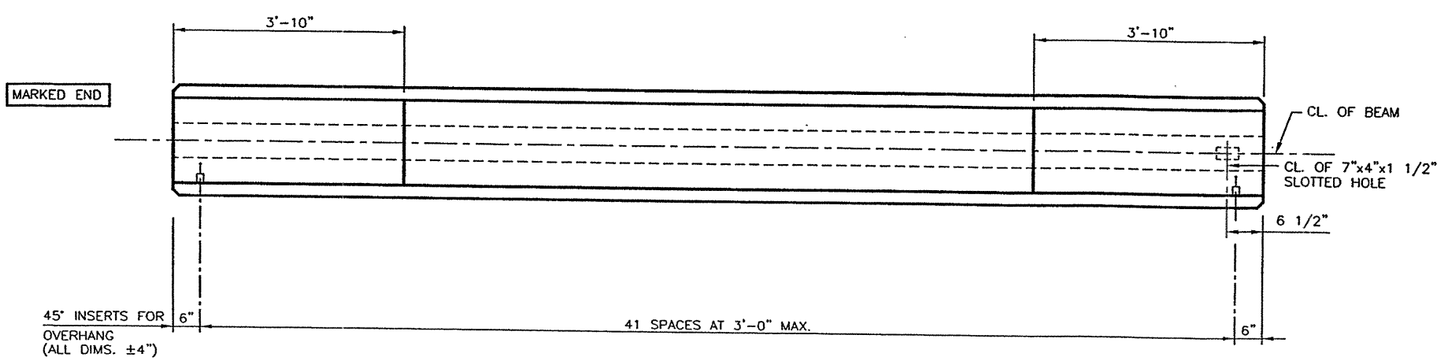

NO SKEW BEAM PLAN NO SKEW

TOTAL QUANTITY OF 45° INSERTS FOR OVERHANG, SUPPLIED BY CONTRACTOR, ON THIS SHEET = 42

BEAM TYPE = "IV"
BEAM MARK = IV-13
TOTAL BEAMS ON THIS SHEET = 1
TOTAL LINEAR FOOTAGE THIS SHEET = 122.67'

FABRICATOR: BEXAR CONCRETE WORKS I, LTD.

CONTRACTOR: SUMMIT CONTRACTING, INC.

SHOP PLANS WERE PREPARED BY: BEXAR CONCRETE WORKS I, LTD.

STATE DISTRICT	FEDERAL REGION	STATE	FEDERAL AID PROJECT NO.			
LAREDO	6	TEXAS	NH-2002 (79)			
COUNTY			CONTROL	SECTION	JOB	HIGHWAY
WEBB			0018	05	062,ETC.	IH 35

JOB. NO.	DRAWN BY	CHECKED BY	DATE OUT	SHEET NO.
2509	MJR	JDH	02-20-04	IV-13

FABRICATION SHEET

2509IV13.DWG

SHEET NO. 670 HH

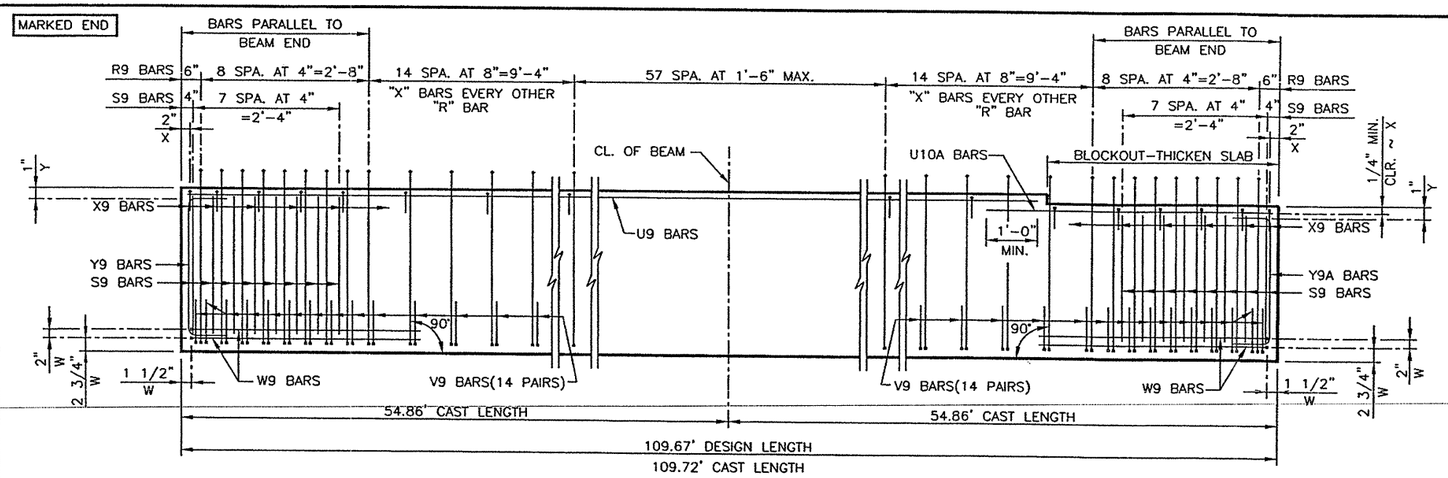

BEAM ELEVATION (REINF.)

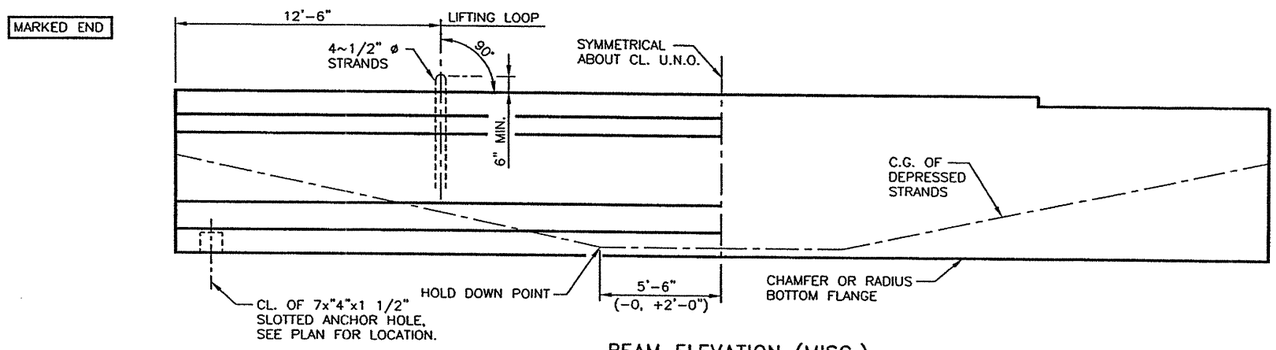

BEAM ELEVATION (MISC.)

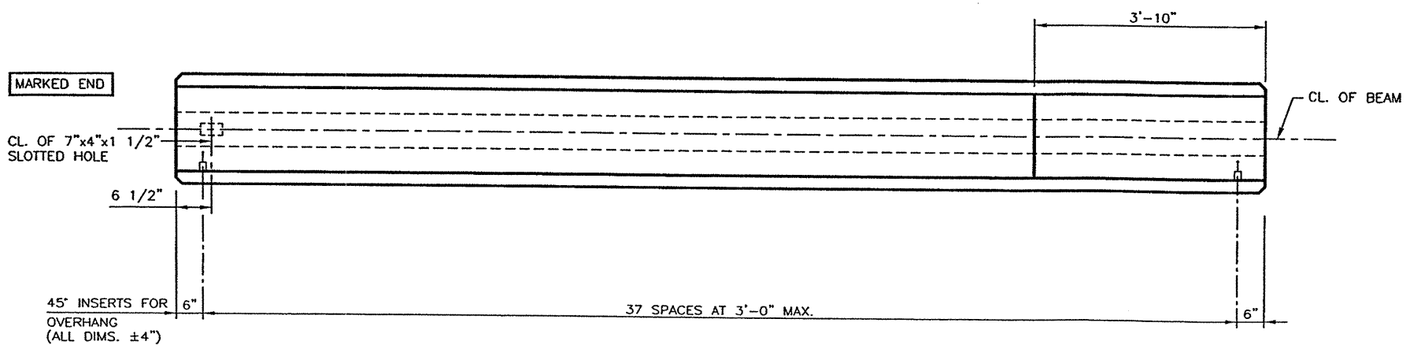

BEAM PLAN

REINFORCING STEEL TABLE

BAR MARK	BAR SIZE	TOTAL QUANTITY PER BM.	TOTAL QUANTITY PER SHT.	BAR LENGTH
R9	#4	102	102	SEE SHT. S-"IV"
S9	#7	32	32	SEE SHT. S-"IV"
U9	#5	2	2	105'-8"
U10A	#5	2	2	6'-6"
V9	#4	56	56	SEE SHT. S-"IV"
W9	#5	4	4	SEE SHT. S-"IV"
X9	#3	82	82	SEE SHT. S-"IV"
Y9	#6	2	2	SEE SHT. S-"IV"
Y9A	#6	2	2	SEE SHT. S-"IV"

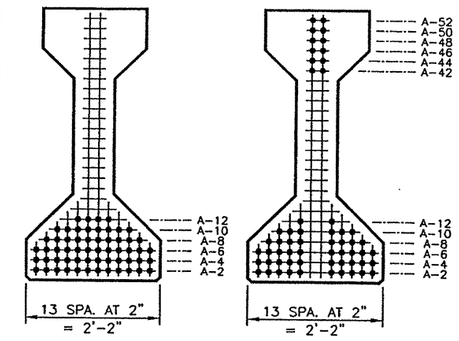

CL. SECTION END SECTION

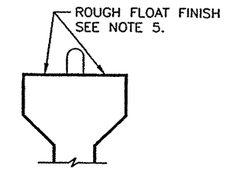

BEAM FINISH

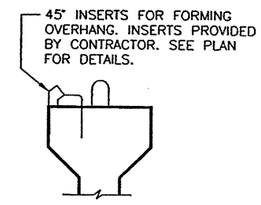

TOP FLANGE INSERTS
(SUPPLIED BY CONTRACTOR)

LO-LAX STRAND PATTERN

DESIGN REF. NO.	: SHEET 647
TOTAL STRAND QUANTITY	: 58
STRAND SIZE AND TYPE : 1/2" ø 270 ksi TO 31.0k	
ECCENTRICITY AT CL. (IN.)	: 18.68
ECCENTRICITY AT END (IN.)	: 10.41
DEPRESSED QUANTITY AND LOC. (IN.)	: 12 AT A-52
RELEASE STRENGTH (PSI)	: 6112
MIN. 28 DAY STRENGTH (PSI)	: 7030
APPROX. UPLIFT FORCE (kips)	: 26.18

NOTES:

1) ALL UNANSWERED VERIFIES ARE CONSIDERED CORRECT.
2) ALL DIMENSIONS PERTAINING TO STRANDS AND REINFORCING BARS WILL BE CENTER TO CENTER.
3) FOR ALL DIMENSIONS AND DETAILS NOT SHOWN SEE STANDARD SHEET S-"IV".
4) CONTRACTOR TO CUT LIFTING LOOPS TO 2" AFTER ERECTION.
5) ALL BEAMS SHALL HAVE A ROUGH FLOATED FINISH AS SPECIFIED IN TxDOT'S "TEXAS STANDARD SPECIFICATIONS" ITEM 424.4.5.a.
6) ON BRIDGE, BEAMS TO BE PLACED AS MARKS ARE SHOW ON ERECTION SHEETS. ON FABRICATION SHEETS, BEAMS ARE DETAILED WITH MARKS ON LEFT SIDE.

TOTAL QUANTITY OF 45° INSERTS FOR OVERHANG, SUPPLIED BY CONTRACTOR, ON THIS SHEET = 38

BEAM TYPE = "IV"
BEAM MARK = IV-14
TOTAL BEAMS ON THIS SHEET = 1
TOTAL LINEAR FOOTAGE THIS SHEET = 109.67'

FABRICATOR: BEXAR CONCRETE WORKS I, LTD.

CONTRACTOR: SUMMIT CONTRACTING, INC.

SHOP PLANS WERE PREPARED BY: BEXAR CONCRETE WORKS I, LTD.

STATE DISTRICT	FEDERAL REGION	STATE	FEDERAL AID PROJECT NO.			
LAREDO	6	TEXAS	NH-2002 (79)			
COUNTY			CONTROL	SECTION	JOB	HIGHWAY
WEBB			0018	05	062,ETC.	IH 35

JOB. NO.	DRAWN BY	CHECKED BY	DATE OUT	SHEET NO.
2509	MJR	JDH	02-20-04	IV-14

FABRICATION SHEET

2509IV14.DWG

SHEET NO. 670 II

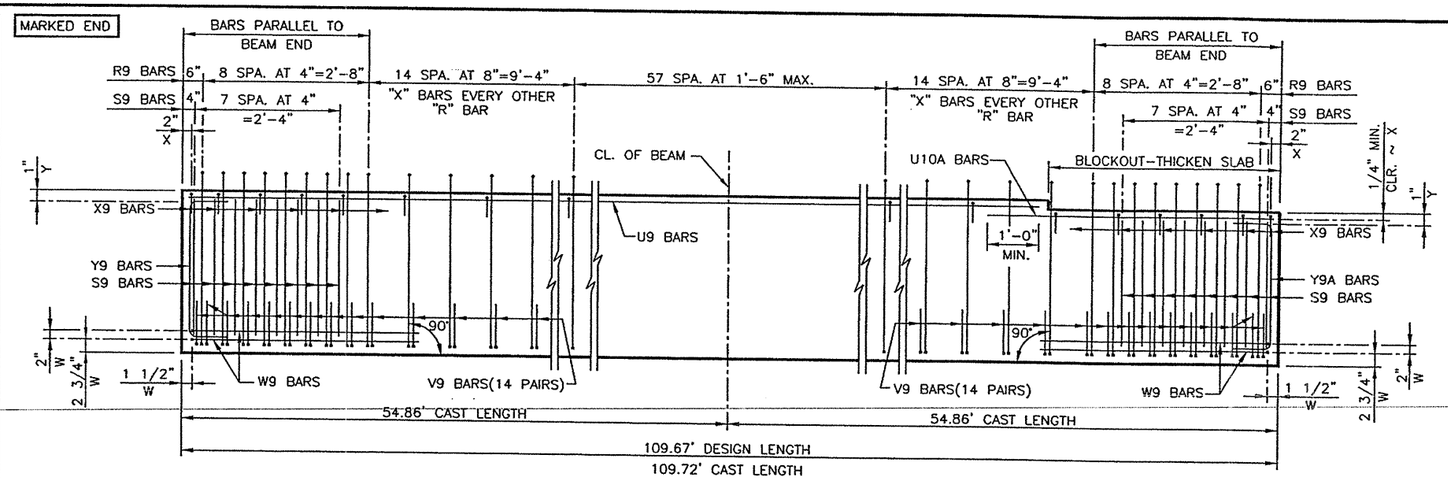

BEAM ELEVATION (REINF.)

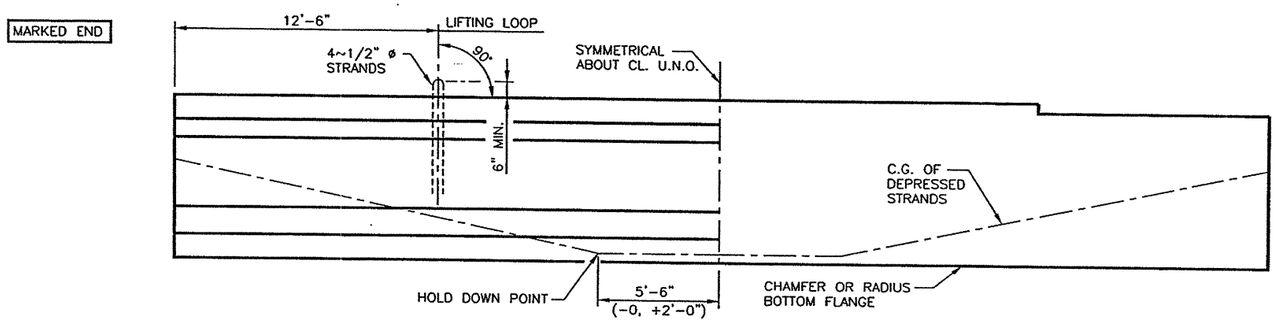

BEAM ELEVATION (MISC.)

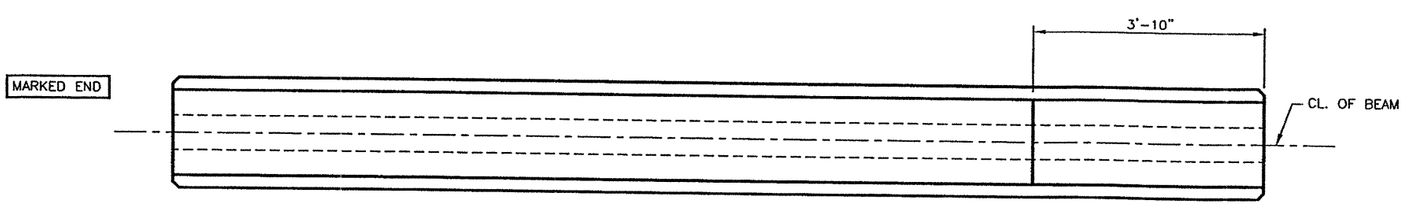

NO SKEW

BEAM PLAN

NO SKEW

REINFORCING STEEL TABLE

BAR MARK	BAR SIZE	TOTAL QUANTITY PER BM.	TOTAL QUANTITY PER SHT.	BAR LENGTH
R9	#4	102	408	SEE SHT. S-"IV"
S9	#7	32	128	SEE SHT. S-"IV"
U9	#5	2	8	105'-8"
U10A	#5	2	8	6'-6"
V9	#4	56	224	SEE SHT. S-"IV"
W9	#5	4	16	SEE SHT. S-"IV"
X9	#3	82	328	SEE SHT. S-"IV"
Y9	#6	2	8	SEE SHT. S-"IV"
Y9A	#6	2	8	SEE SHT. S-"IV"

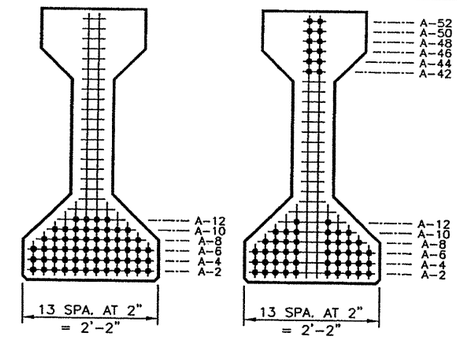

CL. SECTION END SECTION

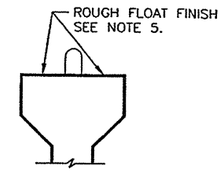

BEAM FINISH

LO-LAX STRAND PATTERN

DESIGN REF. NO.	: SHEET 647
TOTAL STRAND QUANTITY	: 58
STRAND SIZE AND TYPE : 1/2" ø 270 ksi TO 31.0k	
ECCENTRICITY AT CL. (IN.)	: 18.68
ECCENTRICITY AT END (IN.)	: 10.41
DEPRESSED QUANTITY AND LOC. (IN.)	: 12 AT A-52
RELEASE STRENGTH (PSI)	: 6112
MIN. 28 DAY STRENGTH (PSI)	: 7030
APPROX. UPLIFT FORCE (kips)	: 26.18

NOTES:

1) ALL UNANSWERED VERIFIES ARE CONSIDERED CORRECT.
2) ALL DIMENSIONS PERTAINING TO STRANDS AND REINFORCING BARS WILL BE CENTER TO CENTER.
3) FOR ALL DIMENSIONS AND DETAILS NOT SHOWN SEE STANDARD SHEET S-"IV".
4) CONTRACTOR TO CUT LIFTING LOOPS TO 2" AFTER ERECTION.
5) ALL BEAMS SHALL HAVE A ROUGH FLOATED FINISH AS SPECIFIED IN TxDOT'S "TEXAS STANDARD SPECIFICATIONS" ITEM 424.4.5.a.
6) ON BRIDGE, BEAMS TO BE PLACED AS MARKS ARE SHOW ON ERECTION SHEETS. ON FABRICATION SHEETS, BEAMS ARE DETAILED WITH MARKS ON LEFT SIDE.

BEAM TYPE = "IV"
BEAM MARK = IV-15
TOTAL BEAMS ON THIS SHEET = 4
TOTAL LINEAR FOOTAGE THIS SHEET = 438.68'

FABRICATOR: BEXAR CONCRETE WORKS I, LTD.

CONTRACTOR: SUMMIT CONTRACTING, INC.

SHOP PLANS WERE PREPARED BY: BEXAR CONCRETE WORKS I, LTD.

STATE DISTRICT	FEDERAL REGION	STATE	FEDERAL AID PROJECT NO.			
LAREDO	6	TEXAS	NH-2002 (79)			
COUNTY			CONTROL	SECTION	JOB	HIGHWAY
WEBB			0018	05	062,ETC.	IH 35

JOB. NO.	DRAWN BY	CHECKED BY	DATE OUT	SHEET NO.
2509	MJR	JDH	02-20-04	IV-15

FABRICATION SHEET

2509IV15.DWG

SHEET NO. 670 JJ

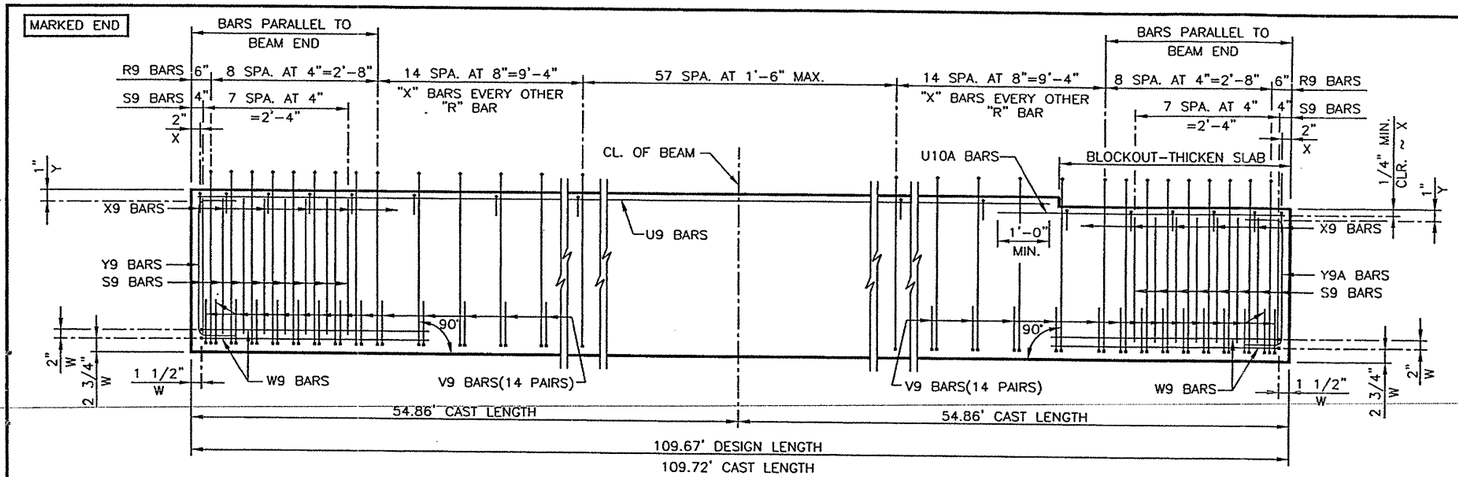

BEAM ELEVATION (REINF.)

REINFORCING STEEL TABLE				
BAR MARK	BAR SIZE	TOTAL QUANTITY PER BM.	TOTAL QUANTITY PER SHT.	BAR LENGTH
R9	#4	102	102	SEE SHT. S-"IV"
S9	#7	32	32	SEE SHT. S-"IV"
U9	#5	2	2	105'-8"
U10A	#5	2	2	6'-6"
V9	#4	56	56	SEE SHT. S-"IV"
W9	#5	4	4	SEE SHT. S-"IV"
X9	#3	82	82	SEE SHT. S-"IV"
Y9	#6	2	2	SEE SHT. S-"IV"
Y9A	#6	2	2	SEE SHT. S-"IV"

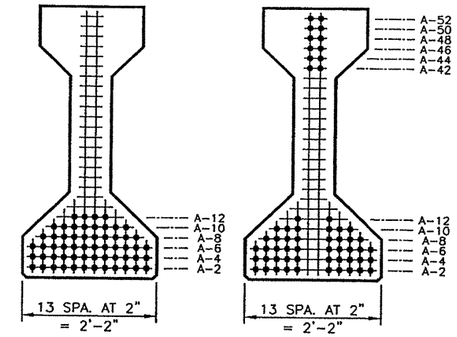

CL. SECTION END SECTION

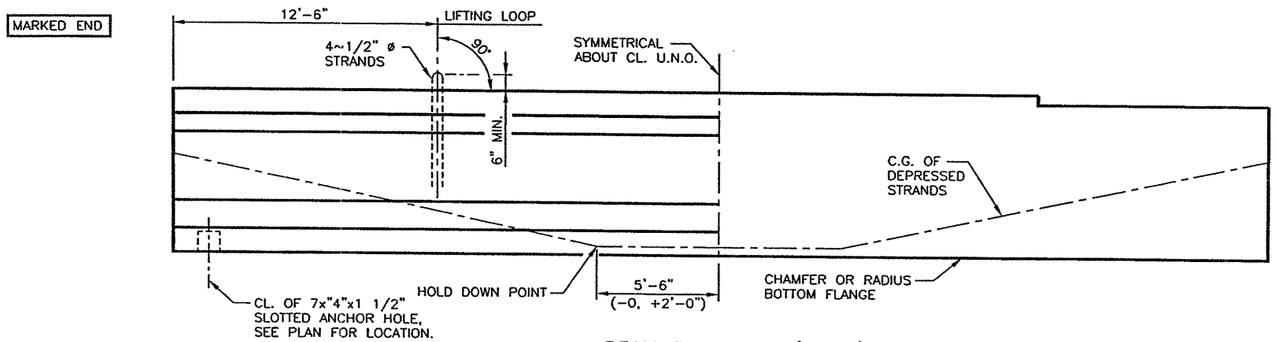

BEAM ELEVATION (MISC.)

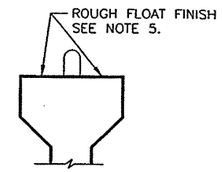

BEAM FINISH

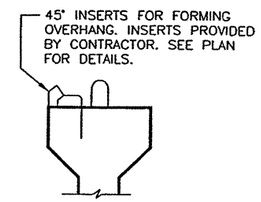

TOP FLANGE INSERTS
(SUPPLIED BY CONTRACTOR)

LO-LAX STRAND PATTERN	
DESIGN REF. NO.	: SHEET 647
TOTAL STRAND QUANTITY	: 58
STRAND SIZE AND TYPE : 1/2" ø 270 ksi TO 31.0k	
ECCENTRICITY AT CL. (IN.)	: 18.68
ECCENTRICITY AT END (IN.)	: 10.41
DEPRESSED QUANTITY AND LOC. (IN.)	: 12 AT A-52
RELEASE STRENGTH (PSI)	: 6112
MIN. 28 DAY STRENGTH (PSI)	: 7030
APPROX. UPLIFT FORCE (kips)	: 26.18

NOTES:

1) ALL UNANSWERED VERIFIES ARE CONSIDERED CORRECT.
2) ALL DIMENSIONS PERTAINING TO STRANDS AND REINFORCING BARS WILL BE CENTER TO CENTER.
3) FOR ALL DIMENSIONS AND DETAILS NOT SHOWN SEE STANDARD SHEET S-"IV".
4) CONTRACTOR TO CUT LIFTING LOOPS TO 2" AFTER ERECTION.
5) ALL BEAMS SHALL HAVE A ROUGH FLOATED FINISH AS SPECIFIED IN TxDOT'S "TEXAS STANDARD SPECIFICATIONS" ITEM 424.4.5.a.
6) ON BRIDGE, BEAMS TO BE PLACED AS MARKS ARE SHOW ON ERECTION SHEETS. ON FABRICATION SHEETS, BEAMS ARE DETAILED WITH MARKS ON LEFT SIDE.

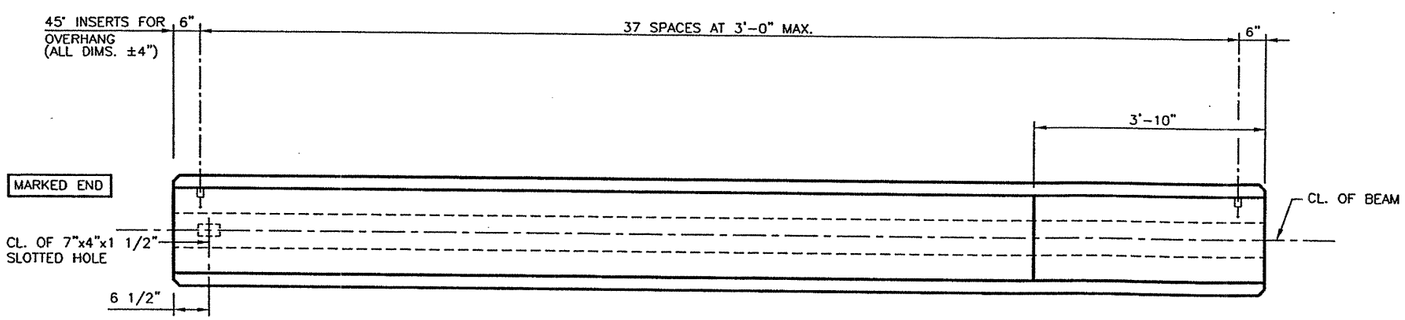

NO SKEW

BEAM PLAN

NO SKEW

TOTAL QUANTITY OF 45° INSERTS FOR OVERHANG, SUPPLIED BY CONTRACTOR, ON THIS SHEET = 38

BEAM TYPE = "IV"
BEAM MARK = IV-16
TOTAL BEAMS ON THIS SHEET = 1
TOTAL LINEAR FOOTAGE THIS SHEET = 109.67'

FABRICATOR: BEXAR CONCRETE WORKS I, LTD.

CONTRACTOR: SUMMIT CONTRACTING, INC.

SHOP PLANS WERE PREPARED BY: BEXAR CONCRETE WORKS I, LTD.

STATE DISTRICT	FEDERAL REGION	STATE	FEDERAL AID PROJECT NO.			
LAREDO	6	TEXAS	NH-2002 (79)			
COUNTY			CONTROL	SECTION	JOB	HIGHWAY
WEBB			0018	05	062,ETC.	IH 35

JOB. NO.	DRAWN BY	CHECKED BY	DATE OUT	SHEET NO.
2509	MJR	JDH	02-20-04	IV-16

FABRICATION SHEET

2509IV16.DWG

SHEET NO. 670 KK

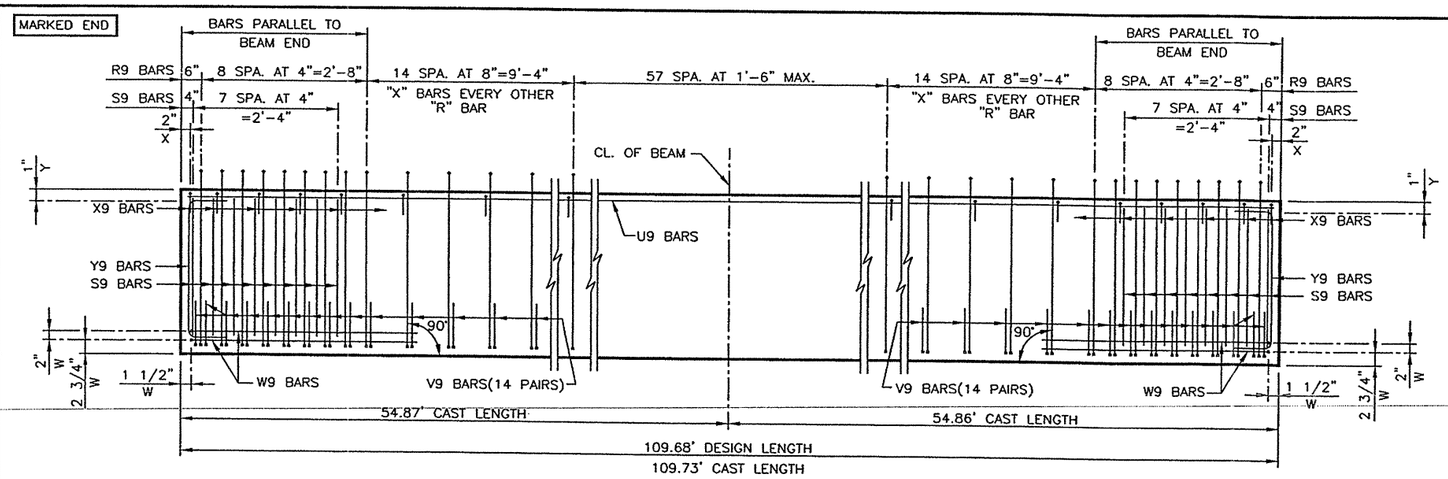

BEAM ELEVATION (REINF.)

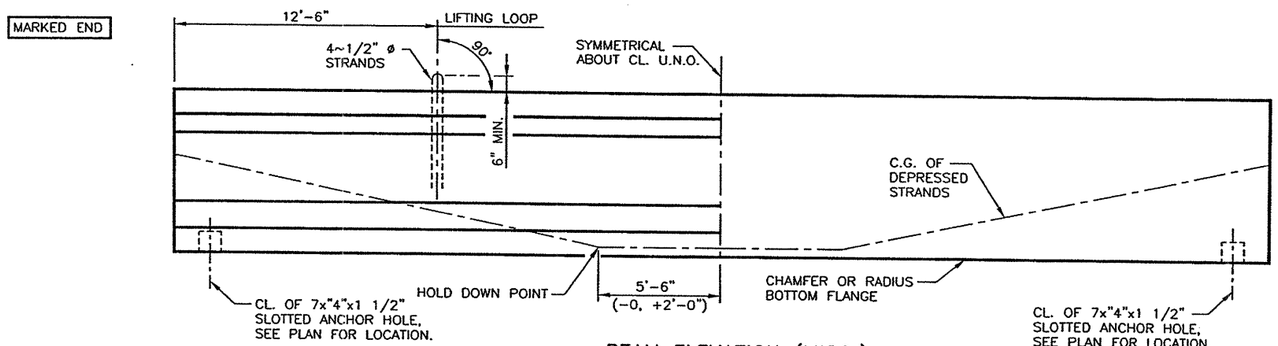

BEAM ELEVATION (MISC.)

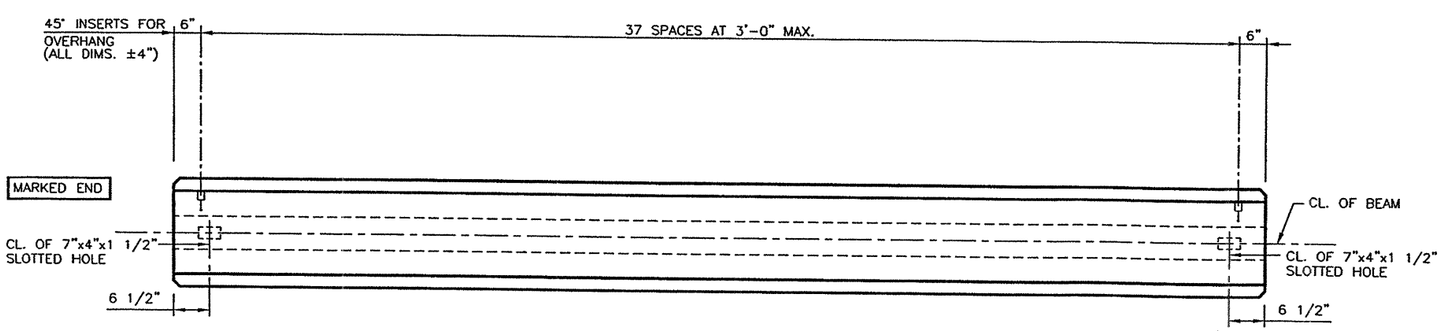

NO SKEW

BEAM PLAN

NO SKEW

REINFORCING STEEL TABLE

BAR MARK	BAR SIZE	TOTAL QUANTITY PER BM.	TOTAL QUANTITY PER SHT.	BAR LENGTH
R9	#4	102	102	SEE SHT. S-"IV"
S9	#7	32	32	SEE SHT. S-"IV"
U9	#5	2	2	109'-6"
V9	#4	56	56	SEE SHT. S-"IV"
W9	#5	4	4	SEE SHT. S-"IV"
X9	#3	82	82	SEE SHT. S-"IV"
Y9	#6	4	4	SEE SHT. S-"IV"

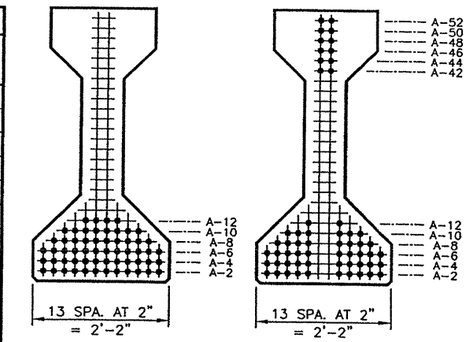

CL. SECTION END SECTION

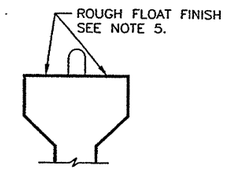

BEAM FINISH

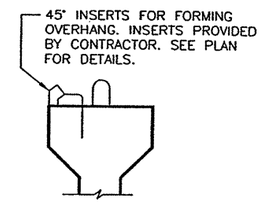

TOP FLANGE INSERTS
(SUPPLIED BY CONTRACTOR)

LO-LAX STRAND PATTERN

DESIGN REF. NO.	: SHEET 647
TOTAL STRAND QUANTITY	: 58
STRAND SIZE AND TYPE : 1/2" ø 270 ksi TO 31.0k	
ECCENTRICITY AT CL. (IN.)	: 18.68
ECCENTRICITY AT END (IN.)	: 10.41
DEPRESSED QUANTITY AND LOC. (IN.)	: 12 AT A-52
RELEASE STRENGTH (PSI)	: 6112
MIN. 28 DAY STRENGTH (PSI)	: 7030
APPROX. UPLIFT FORCE (kips)	: 26.18

NOTES:

1) ALL UNANSWERED VERIFIES ARE CONSIDERED CORRECT.
2) ALL DIMENSIONS PERTAINING TO STRANDS AND REINFORCING BARS WILL BE CENTER TO CENTER.
3) FOR ALL DIMENSIONS AND DETAILS NOT SHOWN SEE STANDARD SHEET S-"IV".
4) CONTRACTOR TO CUT LIFTING LOOPS TO 2" AFTER ERECTION.
5) ALL BEAMS SHALL HAVE A ROUGH FLOATED FINISH AS SPECIFIED IN TxDOT'S "TEXAS STANDARD SPECIFICATIONS" ITEM 424.4.5.o.
6) ON BRIDGE, BEAMS TO BE PLACED AS MARKS ARE SHOW ON ERECTION SHEETS. ON FABRICATION SHEETS, BEAMS ARE DETAILED WITH MARKS ON LEFT SIDE.

TOTAL QUANTITY OF 45° INSERTS FOR OVERHANG, SUPPLIED BY CONTRACTOR, ON THIS SHEET = 38

BEAM TYPE = "IV"
BEAM MARK = IV-17
TOTAL BEAMS ON THIS SHEET = 1
TOTAL LINEAR FOOTAGE THIS SHEET = 109.68'

FABRICATOR: BEXAR CONCRETE WORKS I, LTD.

CONTRACTOR: SUMMIT CONTRACTING, INC.

SHOP PLANS WERE PREPARED BY: BEXAR CONCRETE WORKS I, LTD.

STATE DISTRICT	FEDERAL REGION	STATE	FEDERAL AID PROJECT NO.			
LAREDO	6	TEXAS	NH-2002 (79)			
COUNTY			CONTROL	SECTION	JOB	HIGHWAY
WEBB			0018	05	062,ETC.	IH 35

JOB. NO.	DRAWN BY	CHECKED BY	DATE OUT	SHEET NO.
2509	MJR	JDH	02-20-04	IV-17

FABRICATION SHEET

2509IV17.DWG

SHEET NO. 67OLL

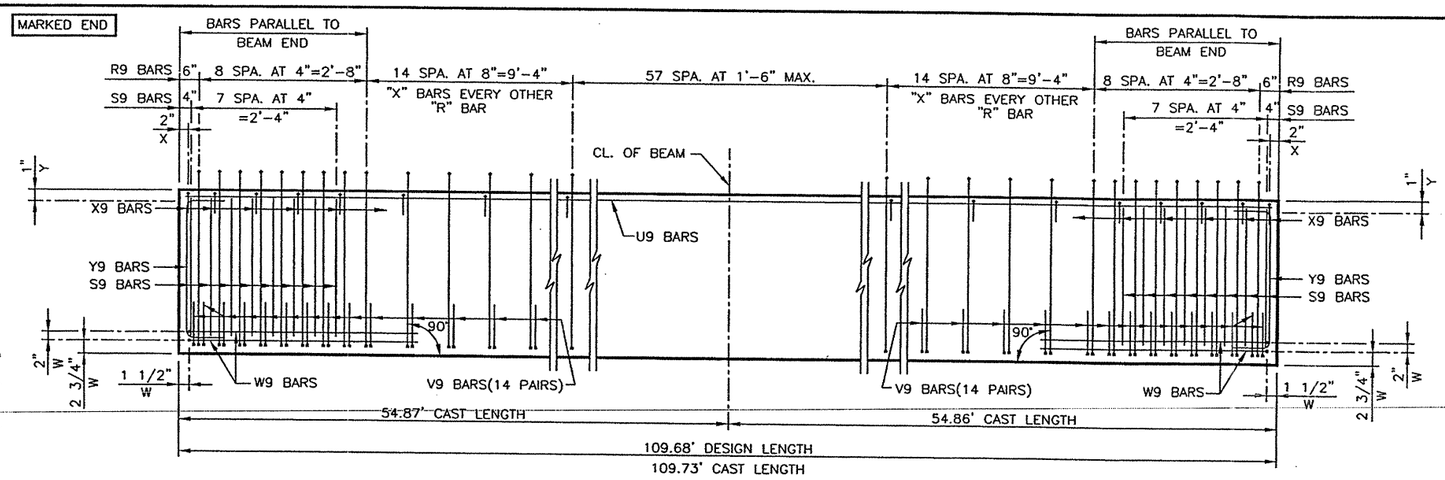

BEAM ELEVATION (REINF.)

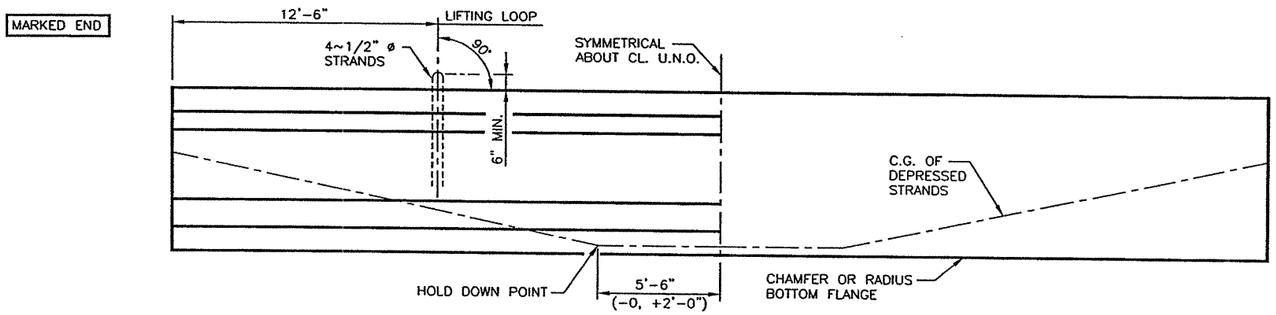

BEAM ELEVATION (MISC.)

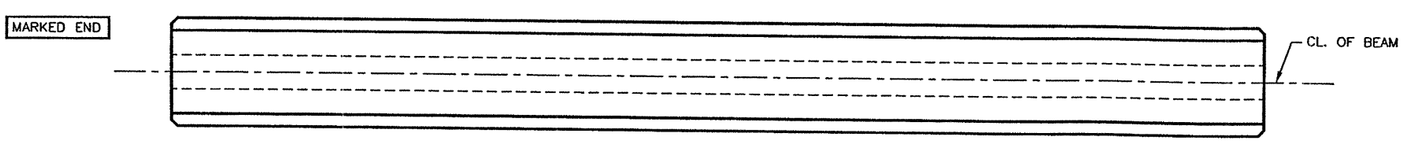

NO SKEW

BEAM PLAN

NO SKEW

REINFORCING STEEL TABLE

BAR MARK	BAR SIZE	TOTAL QUANTITY PER BM.	TOTAL QUANTITY PER SHT.	BAR LENGTH
R9	#4	102	408	SEE SHT. S-"IV"
S9	#7	32	128	SEE SHT. S-"IV"
U9	#5	2	8	109'-6"
V9	#4	56	224	SEE SHT. S-"IV"
W9	#5	4	16	SEE SHT. S-"IV"
X9	#3	82	328	SEE SHT. S-"IV"
Y9	#6	4	16	SEE SHT. S-"IV"

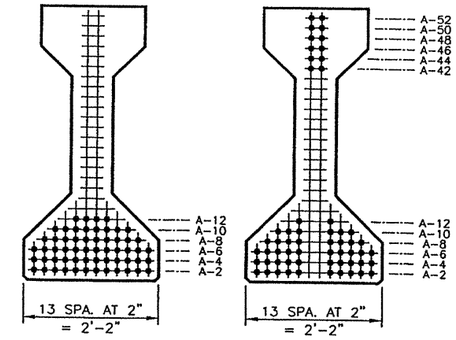

CL. SECTION END SECTION

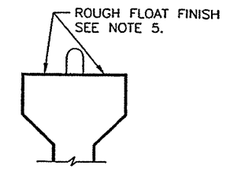

BEAM FINISH

LO-LAX STRAND PATTERN

DESIGN REF. NO.	: SHEET 647
TOTAL STRAND QUANTITY	: 58
STRAND SIZE AND TYPE : 1/2" ø 270 ksi TO 31.0k	
ECCENTRICITY AT CL. (IN.)	: 18.68
ECCENTRICITY AT END (IN.)	: 10.41
DEPRESSED QUANTITY AND LOC. (IN.)	: 12 AT A-52
RELEASE STRENGTH (PSI)	: 6112
MIN. 28 DAY STRENGTH (PSI)	: 7030
APPROX. UPLIFT FORCE (kips)	: 26.18

NOTES:

1) ALL UNANSWERED VERIFIES ARE CONSIDERED CORRECT.
2) ALL DIMENSIONS PERTAINING TO STRANDS AND REINFORCING BARS WILL BE CENTER TO CENTER.
3) FOR ALL DIMENSIONS AND DETAILS NOT SHOWN SEE STANDARD SHEET S-"IV".
4) CONTRACTOR TO CUT LIFTING LOOPS TO 2" AFTER ERECTION.
5) ALL BEAMS SHALL HAVE A ROUGH FLOATED FINISH AS SPECIFIED IN TxDOT'S "TEXAS STANDARD SPECIFICATIONS" ITEM 424.4.5.a.
6) ON BRIDGE, BEAMS TO BE PLACED AS MARKS ARE SHOW ON ERECTION SHEETS. ON FABRICATION SHEETS, BEAMS ARE DETAILED WITH MARKS ON LEFT SIDE.

BEAM TYPE = "IV"
BEAM MARK = IV-18
TOTAL BEAMS ON THIS SHEET = 4
TOTAL LINEAR FOOTAGE THIS SHEET = 438.72'

FABRICATOR: BEXAR CONCRETE WORKS I, LTD.

CONTRACTOR: SUMMIT CONTRACTING, INC.

SHOP PLANS WERE PREPARED BY: BEXAR CONCRETE WORKS I, LTD.

STATE DISTRICT	FEDERAL REGION	STATE	FEDERAL AID PROJECT NO.			
LAREDO	6	TEXAS	NH-2002 (79)			
COUNTY			CONTROL	SECTION	JOB	HIGHWAY
WEBB			0018	05	062,ETC.	IH 35

JOB. NO.	DRAWN BY	CHECKED BY	DATE OUT	SHEET NO.
2509	MJR	JDH	02-20-04	IV-18

FABRICATION SHEET

2509IV18.DWG

SHEET NO. 670 MM

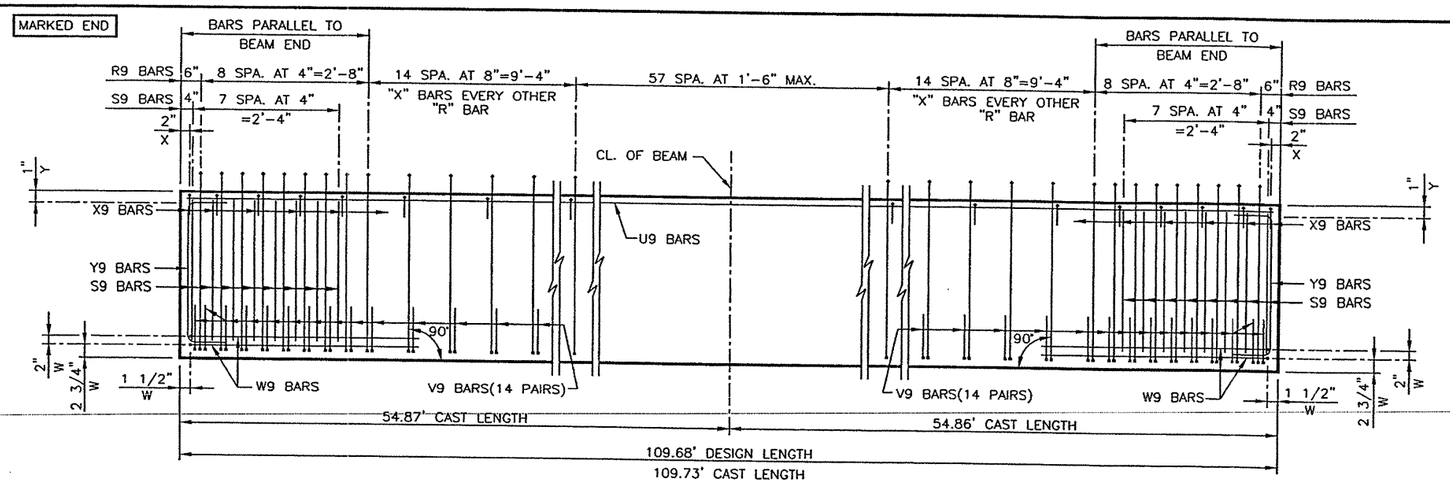

BEAM ELEVATION (REINF.)

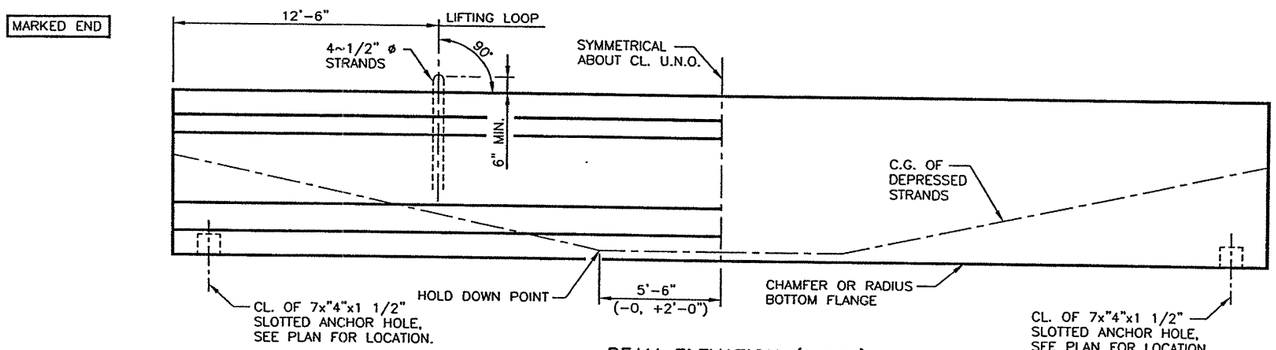

BEAM ELEVATION (MISC.)

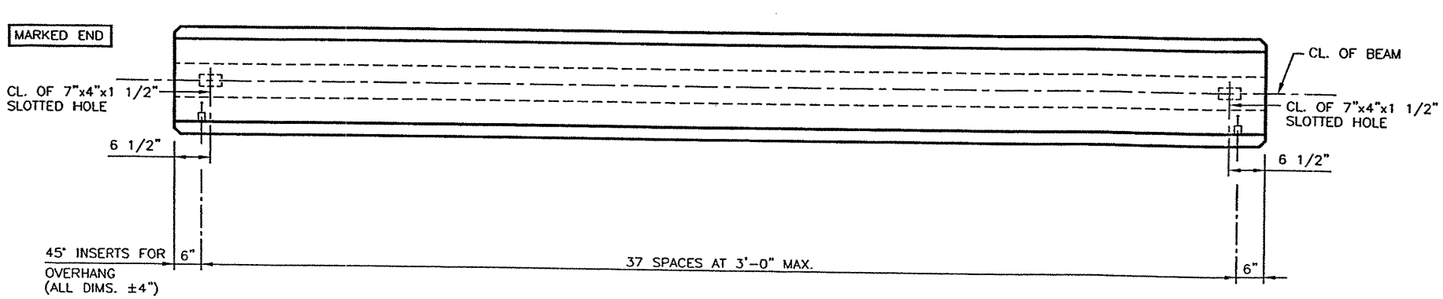

BEAM PLAN

REINFORCING STEEL TABLE

BAR MARK	BAR SIZE	TOTAL QUANTITY PER BM.	TOTAL QUANTITY PER SHT.	BAR LENGTH
R9	#4	102	102	SEE SHT. S-"IV"
S9	#7	32	32	SEE SHT. S-"IV"
U9	#5	2	2	109'-6"
V9	#4	56	56	SEE SHT. S-"IV"
W9	#5	4	4	SEE SHT. S-"IV"
X9	#3	82	82	SEE SHT. S-"IV"
Y9	#6	4	4	SEE SHT. S-"IV"

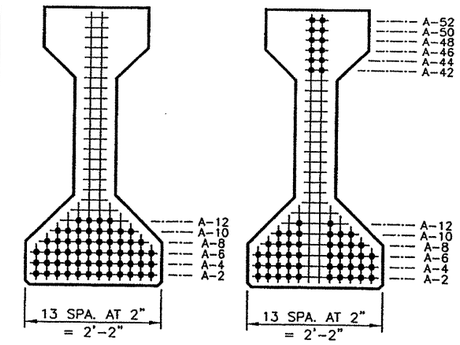

CL. SECTION END SECTION

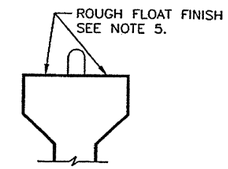

BEAM FINISH

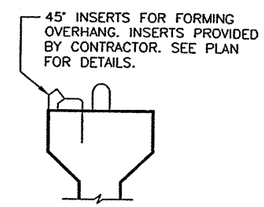

TOP FLANGE INSERTS
(SUPPLIED BY CONTRACTOR)

LO-LAX STRAND PATTERN

DESIGN REF. NO.	: SHEET 647
TOTAL STRAND QUANTITY	: 58
STRAND SIZE AND TYPE : 1/2" ø 270 ksi TO 31.0k	
ECCENTRICITY AT CL. (IN.)	: 18.68
ECCENTRICITY AT END (IN.)	: 10.41
DEPRESSED QUANTITY AND LOC. (IN.)	: 12 AT A-52
RELEASE STRENGTH (PSI)	: 6112
MIN. 28 DAY STRENGTH (PSI)	: 7030
APPROX. UPLIFT FORCE (kips)	: 26.18

NOTES:

1) ALL UNANSWERED VERIFIES ARE CONSIDERED CORRECT.
2) ALL DIMENSIONS PERTAINING TO STRANDS AND REINFORCING BARS WILL BE CENTER TO CENTER.
3) FOR ALL DIMENSIONS AND DETAILS NOT SHOWN SEE STANDARD SHEET S-"IV".
4) CONTRACTOR TO CUT LIFTING LOOPS TO 2" AFTER ERECTION.
5) ALL BEAMS SHALL HAVE A ROUGH FLOATED FINISH AS SPECIFIED IN TxDOT'S "TEXAS STANDARD SPECIFICATIONS" ITEM 424.4.5.a.
6) ON BRIDGE, BEAMS TO BE PLACED AS MARKS ARE SHOW ON ERECTION SHEETS. ON FABRICATION SHEETS, BEAMS ARE DETAILED WITH MARKS ON LEFT SIDE.

TOTAL QUANTITY OF 45° INSERTS FOR OVERHANG, SUPPLIED BY CONTRACTOR, ON THIS SHEET = 38

BEAM TYPE = "IV"
BEAM MARK = IV-19
TOTAL BEAMS ON THIS SHEET = 1
TOTAL LINEAR FOOTAGE THIS SHEET = 109.68'

FABRICATOR: BEXAR CONCRETE WORKS I, LTD.

CONTRACTOR: SUMMIT CONTRACTING, INC.

SHOP PLANS WERE PREPARED BY: BEXAR CONCRETE WORKS I, LTD.

STATE DISTRICT	FEDERAL REGION	STATE	FEDERAL AID PROJECT NO.			
LAREDO	6	TEXAS	NH-2002 (79)			
COUNTY			CONTROL	SECTION	JOB	HIGHWAY
WEBB			0018	05	062,ETC.	IH 35
JOB. NO.	DRAWN BY		CHECKED BY	DATE OUT		SHEET NO.
2509	MJR		JDH	02-20-04		IV-19
FABRICATION SHEET						

2509IV19.DWG

SHEET NO. 670 NN

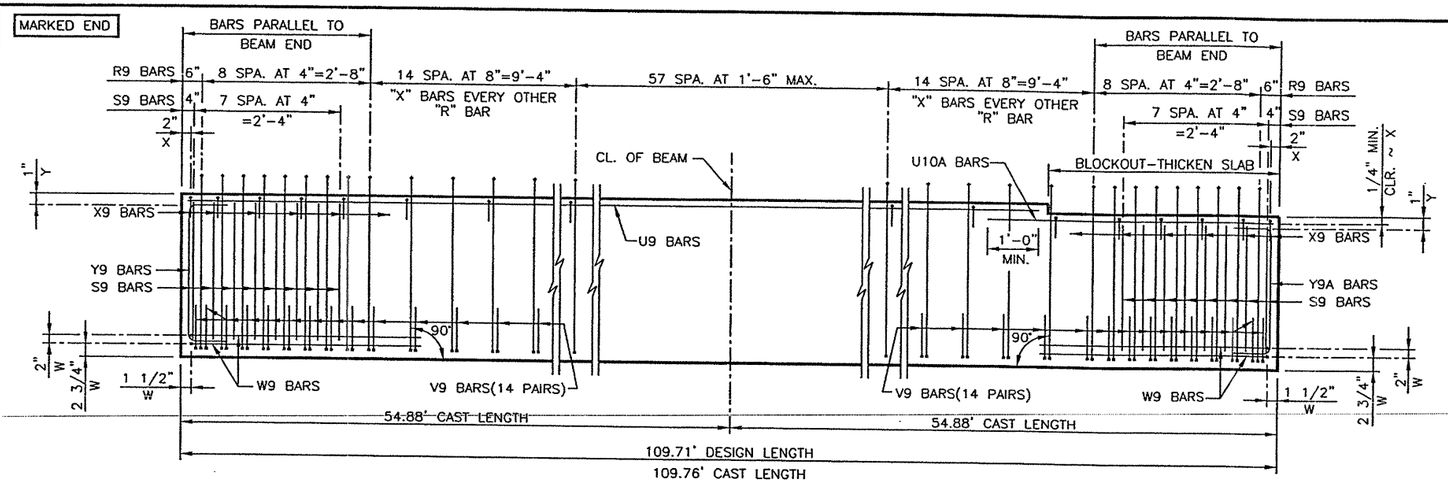

BEAM ELEVATION (REINF.)

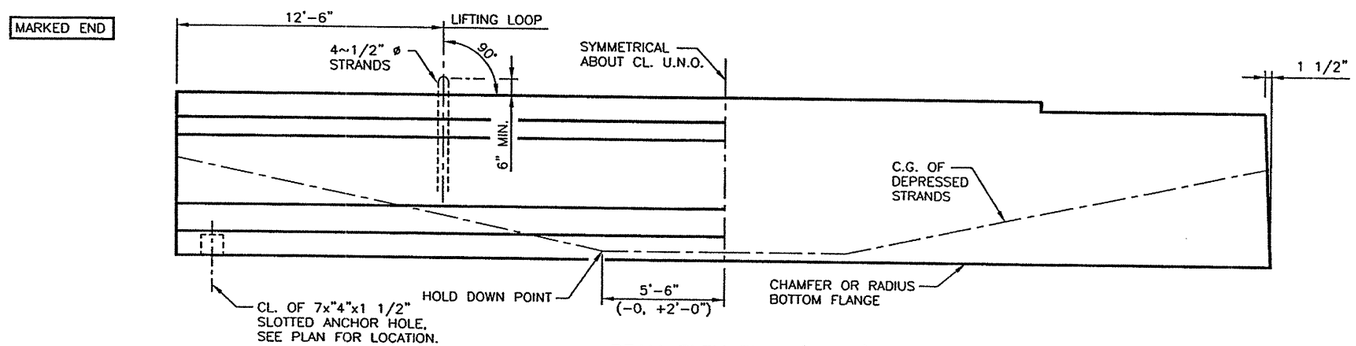

BEAM ELEVATION (MISC.)

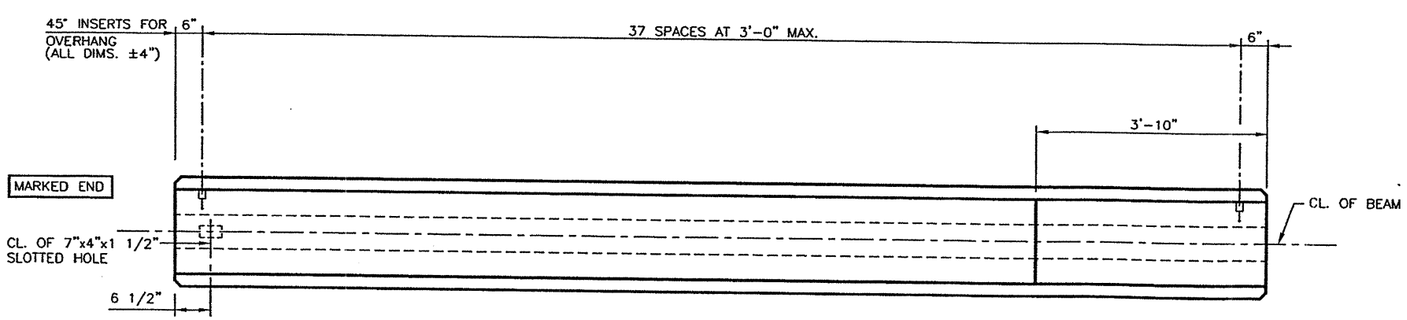

NO SKEW

BEAM PLAN

NO SKEW

REINFORCING STEEL TABLE

BAR MARK	BAR SIZE	TOTAL QUANTITY PER BM.	TOTAL QUANTITY PER SHT.	BAR LENGTH
R9	#4	102	102	SEE SHT. S-"IV"
S9	#7	32	32	SEE SHT. S-"IV"
U9	#5	2	2	105'-8"
U10A	#5	2	2	6'-6"
V9	#4	56	56	SEE SHT. S-"IV"
W9	#5	4	4	SEE SHT. S-"IV"
X9	#3	82	82	SEE SHT. S-"IV"
Y9	#6	2	2	SEE SHT. S-"IV"
Y9A	#6	2	2	SEE SHT. S-"IV"

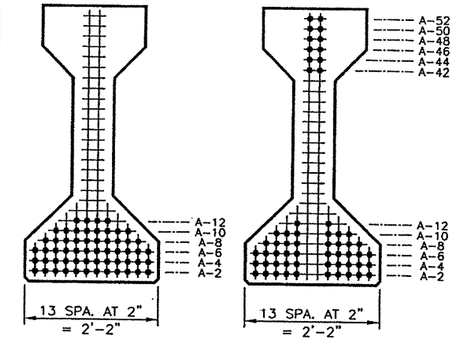

CL. SECTION END SECTION

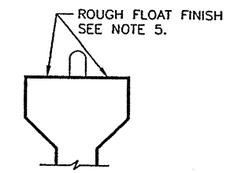

BEAM FINISH

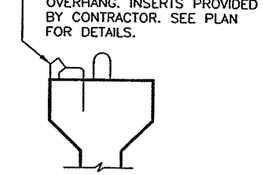

TOP FLANGE INSERTS
(SUPPLIED BY CONTRACTOR)

LO-LAX STRAND PATTERN

DESIGN REF. NO.	: SHEET 647
TOTAL STRAND QUANTITY	: 58
STRAND SIZE AND TYPE	: 1/2" ø 270 ksi TO 31.0k
ECCENTRICITY AT CL. (IN.)	: 18.68
ECCENTRICITY AT END (IN.)	: 10.41
DEPRESSED QUANTITY AND LOC. (IN.)	: 12 AT A-52
RELEASE STRENGTH (PSI)	: 6112
MIN. 28 DAY STRENGTH (PSI)	: 7030
APPROX. UPLIFT FORCE (kips)	: 26.17

NOTES:

1) ALL UNANSWERED VERIFIES ARE CONSIDERED CORRECT.
2) ALL DIMENSIONS PERTAINING TO STRANDS AND REINFORCING BARS WILL BE CENTER TO CENTER.
3) FOR ALL DIMENSIONS AND DETAILS NOT SHOWN SEE STANDARD SHEET S-"IV".
4) CONTRACTOR TO CUT LIFTING LOOPS TO 2" AFTER ERECTION.
5) ALL BEAMS SHALL HAVE A ROUGH FLOATED FINISH AS SPECIFIED IN TxDOT'S "TEXAS STANDARD SPECIFICATIONS" ITEM 424.4.5.a.
6) ON BRIDGE, BEAMS TO BE PLACED AS MARKS ARE SHOW ON ERECTION SHEETS. ON FABRICATION SHEETS, BEAMS ARE DETAILED WITH MARKS ON LEFT SIDE.

TOTAL QUANTITY OF 45° INSERTS FOR OVERHANG, SUPPLIED BY CONTRACTOR, ON THIS SHEET = 38

BEAM TYPE = "IV"
BEAM MARK = IV-20
TOTAL BEAMS ON THIS SHEET = 1
TOTAL LINEAR FOOTAGE THIS SHEET = 109.71'

FABRICATOR: BEXAR CONCRETE WORKS I, LTD.

CONTRACTOR: SUMMIT CONTRACTING, INC.

SHOP PLANS WERE PREPARED BY: BEXAR CONCRETE WORKS I, LTD.

STATE DISTRICT	FEDERAL REGION	STATE	FEDERAL AID PROJECT NO.
LAREDO	6	TEXAS	NH-2002 (79)

COUNTY	CONTROL	SECTION	JOB	HIGHWAY
WEBB	0018	05	062,ETC.	IH 35

JOB. NO.	DRAWN BY	CHECKED BY	DATE OUT	SHEET NO.
2509	MJR	JDH	02-20-04	IV-20

FABRICATION SHEET

2509IV20.DWG

SHEET NO. 610 00

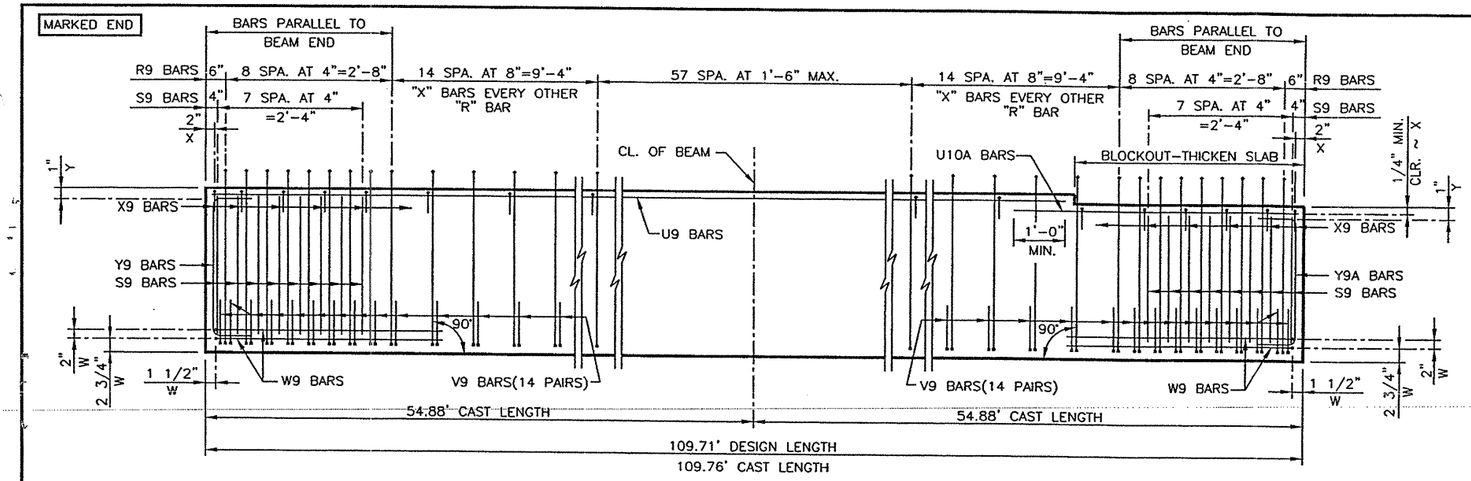

BEAM ELEVATION (REINF.)

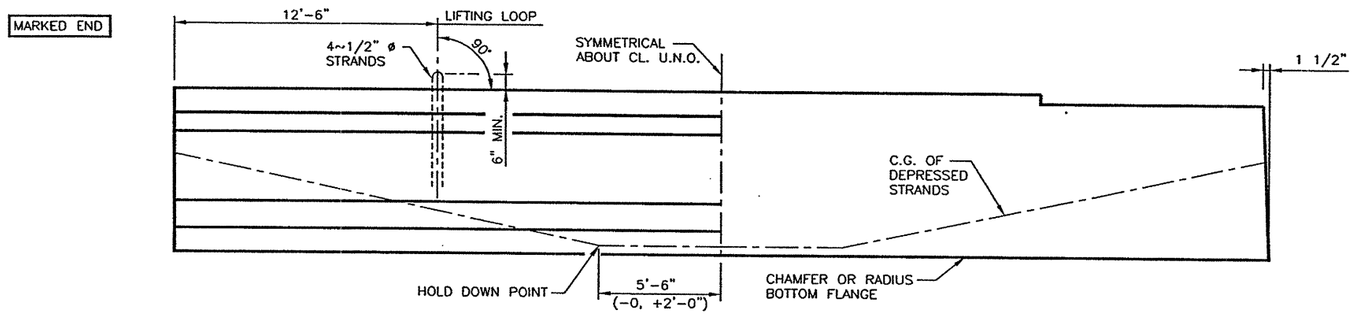

BEAM ELEVATION (MISC.)

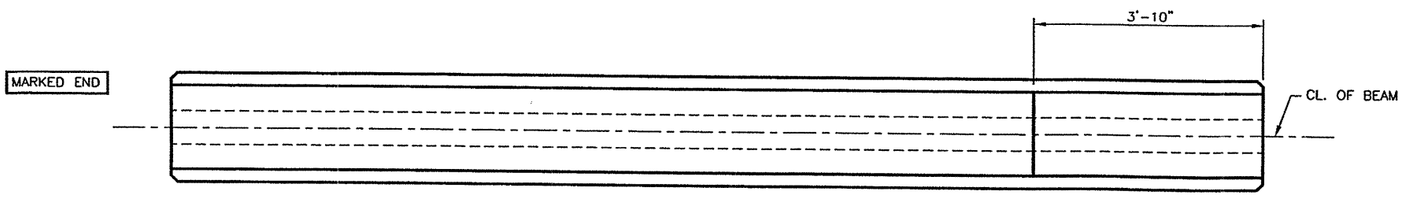

NO SKEW

BEAM PLAN

NO SKEW

REINFORCING STEEL TABLE

BAR MARK	BAR SIZE	TOTAL QUANTITY PER BM.	TOTAL QUANTITY PER SHT.	BAR LENGTH
R9	#4	102	408	SEE SHT. S-"IV"
S9	#7	32	128	SEE SHT. S-"IV"
U9	#5	2	8	105'-8"
U10A	#5	2	8	6'-6"
V9	#4	56	224	SEE SHT. S-"IV"
W9	#5	4	16	SEE SHT. S-"IV"
X9	#3	82	328	SEE SHT. S-"IV"
Y9	#6	2	8	SEE SHT. S-"IV"
Y9A	#6	2	8	SEE SHT. S-"IV"

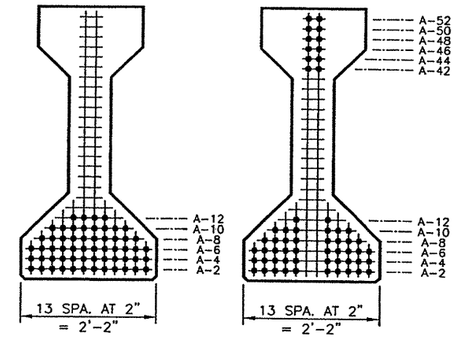

CL. SECTION END SECTION

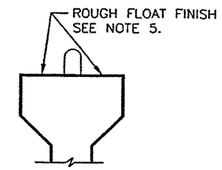

BEAM FINISH

LO-LAX STRAND PATTERN

DESIGN REF. NO.	: SHEET 647
TOTAL STRAND QUANTITY	: 58
STRAND SIZE AND TYPE : 1/2" ø 270 ksi TO 31.0k	
ECCENTRICITY AT CL. (IN.)	: 18.68
ECCENTRICITY AT END (IN.)	: 10.41
DEPRESSED QUANTITY AND LOC. (IN.)	: 12 AT A-52
RELEASE STRENGTH (PSI)	: 6112
MIN. 28 DAY STRENGTH (PSI)	: 7030
APPROX. UPLIFT FORCE (kips)	: 26.17

NOTES:

1) ALL UNANSWERED VERIFIES ARE CONSIDERED CORRECT.
2) ALL DIMENSIONS PERTAINING TO STRANDS AND REINFORCING BARS WILL BE CENTER TO CENTER.
3) FOR ALL DIMENSIONS AND DETAILS NOT SHOWN SEE STANDARD SHEET S-"IV".
4) CONTRACTOR TO CUT LIFTING LOOPS TO 2" AFTER ERECTION.
5) ALL BEAMS SHALL HAVE A ROUGH FLOATED FINISH AS SPECIFIED IN TxDOT'S "TEXAS STANDARD SPECIFICATIONS" ITEM 424.4.5.a.
6) ON BRIDGE, BEAMS TO BE PLACED AS MARKS ARE SHOW ON ERECTION SHEETS. ON FABRICATION SHEETS, BEAMS ARE DETAILED WITH MARKS ON LEFT SIDE.

BEAM TYPE = "IV"
BEAM MARK = IV-21
TOTAL BEAMS ON THIS SHEET = 4
TOTAL LINEAR FOOTAGE THIS SHEET = 438.84'

FABRICATOR: BEXAR CONCRETE WORKS I, LTD.

CONTRACTOR: SUMMIT CONTRACTING, INC.

SHOP PLANS WERE PREPARED BY: BEXAR CONCRETE WORKS I, LTD.

STATE DISTRICT	FEDERAL REGION	STATE	FEDERAL AID PROJECT NO.			
LAREDO	6	TEXAS	NH-2002 (79)			
COUNTY			CONTROL	SECTION	JOB	HIGHWAY
WEBB			0018	05	062,ETC.	IH 35

JOB. NO.	DRAWN BY	CHECKED BY	DATE OUT	SHEET NO.
2509	MJR	JDH	02-20-04	IV-21

FABRICATION SHEET

2509IV21.DWG

SHEET NO. 670 PP

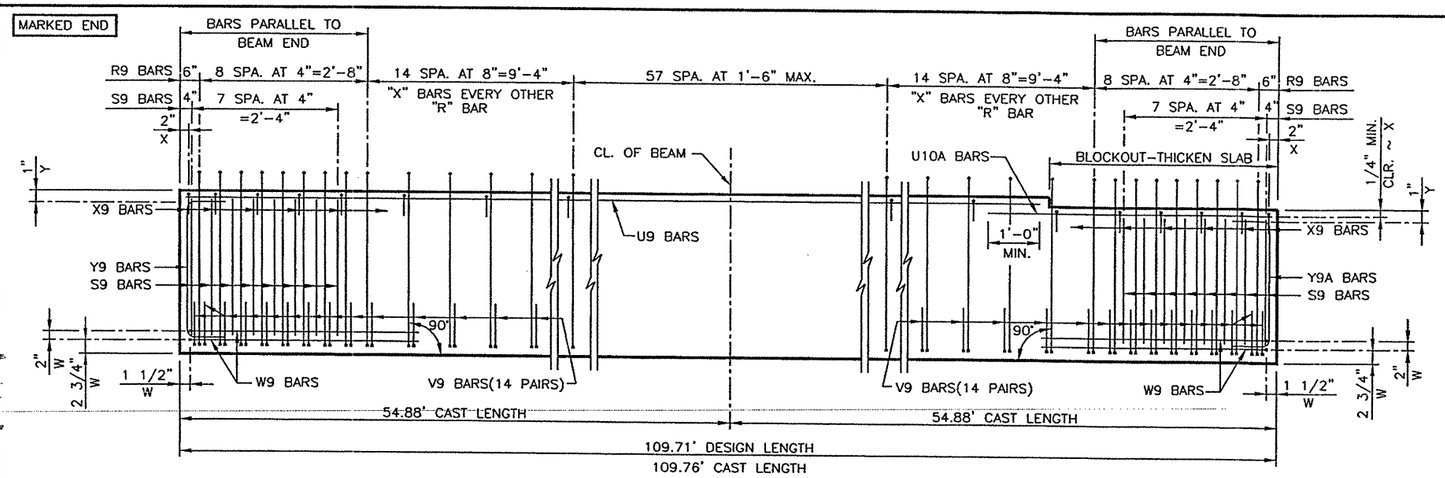

BEAM ELEVATION (REINF.)

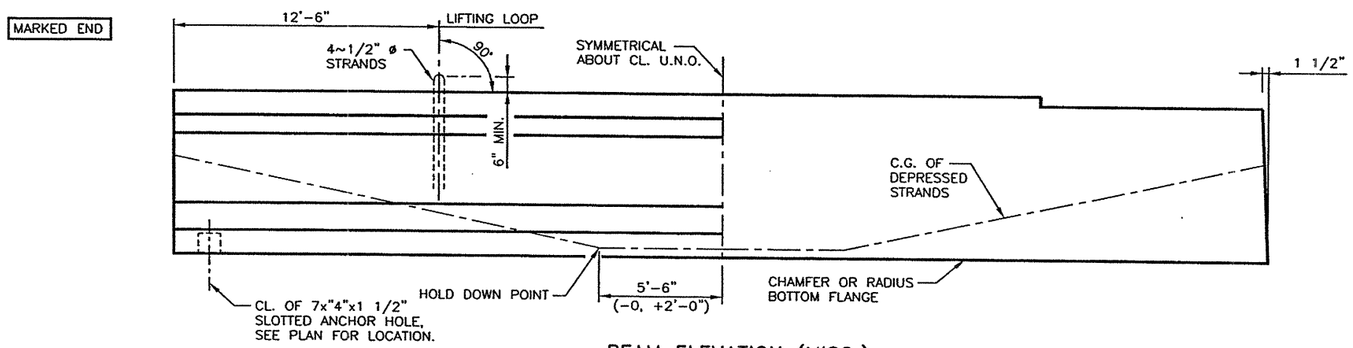

BEAM ELEVATION (MISC.)

REINFORCING STEEL TABLE				
BAR MARK	BAR SIZE	TOTAL QUANTITY PER BM.	TOTAL QUANTITY PER SHT.	BAR LENGTH
R9	#4	102	102	SEE SHT. S-"IV"
S9	#7	32	32	SEE SHT. S-"IV"
U9	#5	2	2	105'-8"
U10A	#5	2	2	6'-6"
V9	#4	56	56	SEE SHT. S-"IV"
W9	#5	4	4	SEE SHT. S-"IV"
X9	#3	82	82	SEE SHT. S-"IV"
Y9	#6	2	2	SEE SHT. S-"IV"
Y9A	#6	2	2	SEE SHT. S-"IV"

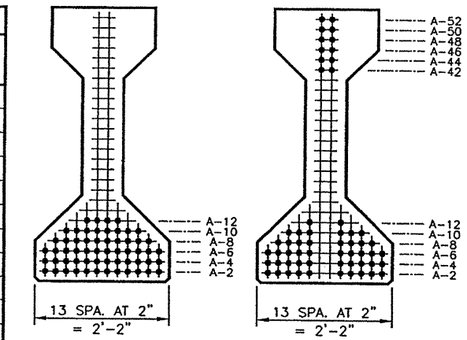

CL. SECTION END SECTION

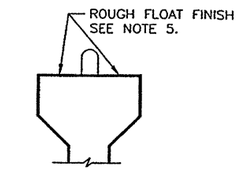

BEAM FINISH

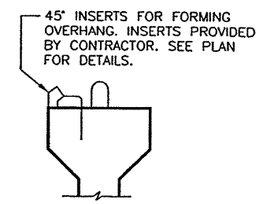

TOP FLANGE INSERTS
(SUPPLIED BY CONTRACTOR)

LO-LAX STRAND PATTERN	
DESIGN REF. NO.	: SHEET 647
TOTAL STRAND QUANTITY	: 58
STRAND SIZE AND TYPE : 1/2" ø 270 ksi TO 31.0k	
ECCENTRICITY AT CL. (IN.)	: 18.68
ECCENTRICITY AT END (IN.)	: 10.41
DEPRESSED QUANTITY AND LOC. (IN.)	: 12 AT A-52
RELEASE STRENGTH (PSI)	: 6112
MIN. 28 DAY STRENGTH (PSI)	: 7030
APPROX. UPLIFT FORCE (kips)	: 26.17

NOTES:

1) ALL UNANSWERED VERIFIES ARE CONSIDERED CORRECT.
2) ALL DIMENSIONS PERTAINING TO STRANDS AND REINFORCING BARS WILL BE CENTER TO CENTER.
3) FOR ALL DIMENSIONS AND DETAILS NOT SHOWN SEE STANDARD SHEET S-"IV".
4) CONTRACTOR TO CUT LIFTING LOOPS TO 2" AFTER ERECTION.
5) ALL BEAMS SHALL HAVE A ROUGH FLOATED FINISH AS SPECIFIED IN TxDOT'S "TEXAS STANDARD SPECIFICATIONS" ITEM 424.4.5.a.
6) ON BRIDGE, BEAMS TO BE PLACED AS MARKS ARE SHOW ON ERECTION SHEETS. ON FABRICATION SHEETS, BEAMS ARE DETAILED WITH MARKS ON LEFT SIDE.

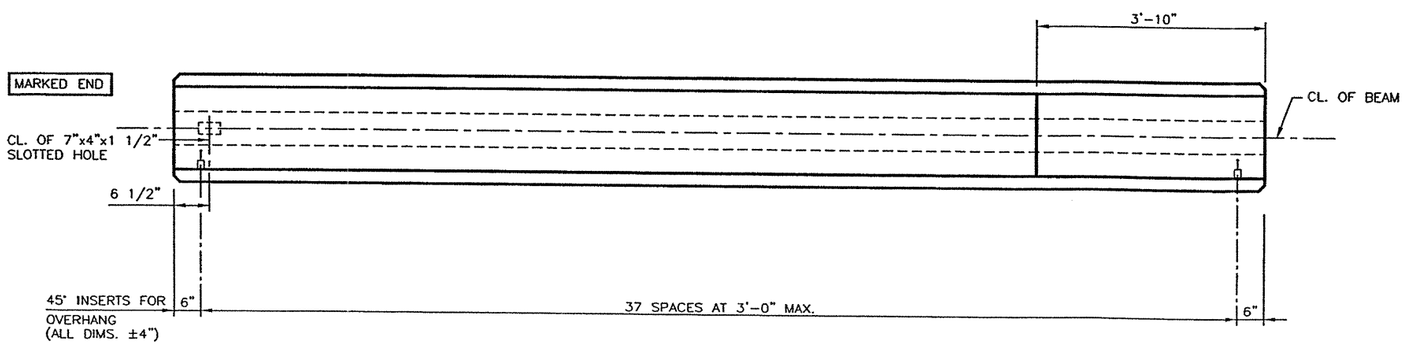

NO SKEW BEAM PLAN NO SKEW

TOTAL QUANTITY OF 45° INSERTS FOR OVERHANG, SUPPLIED BY CONTRACTOR, ON THIS SHEET = 38

BEAM TYPE = "IV"
BEAM MARK = IV-22
TOTAL BEAMS ON THIS SHEET = 1
TOTAL LINEAR FOOTAGE THIS SHEET = 109.71'

FABRICATOR: BEXAR CONCRETE WORKS I, LTD.

CONTRACTOR: SUMMIT CONTRACTING, INC.

SHOP PLANS WERE PREPARED BY: BEXAR CONCRETE WORKS I, LTD.

STATE DISTRICT	FEDERAL REGION	STATE	FEDERAL AID PROJECT NO.			
LAREDO	6	TEXAS	NH-2002 (79)			
COUNTY			CONTROL	SECTION	JOB	HIGHWAY
WEBB			0018	05	062,ETC.	IH 35

JOB. NO.	DRAWN BY	CHECKED BY	DATE OUT	SHEET NO.
2509	MJR	JDH	02-20-04	IV-22

FABRICATION SHEET

2509IV22.DWG

SHEET NO. 670 QQ

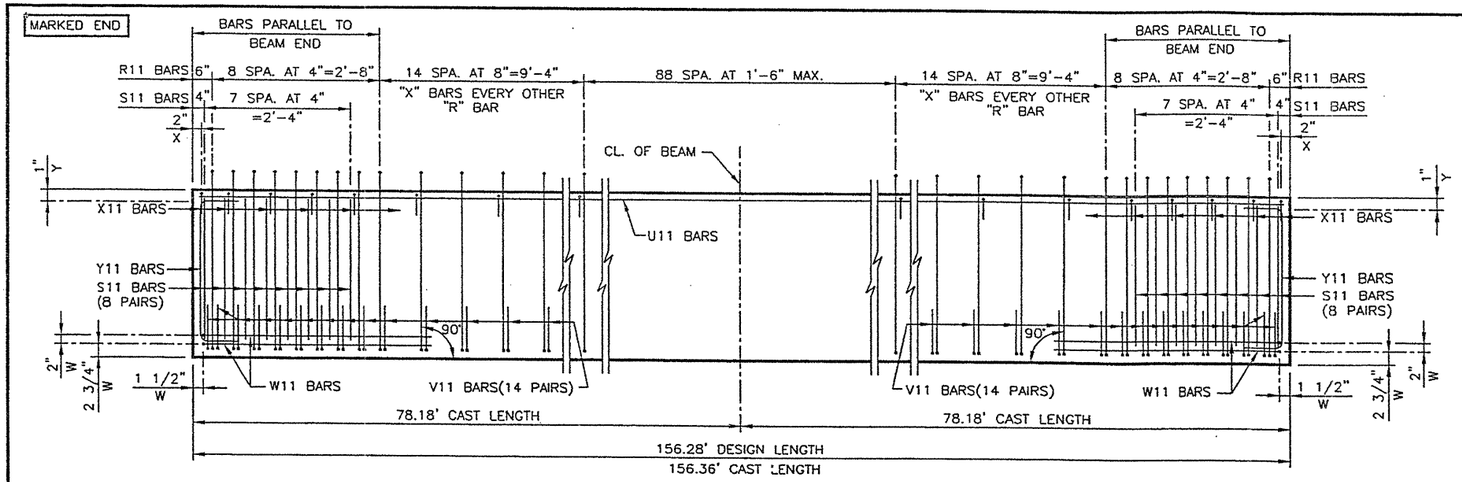

BEAM ELEVATION (REINF.)

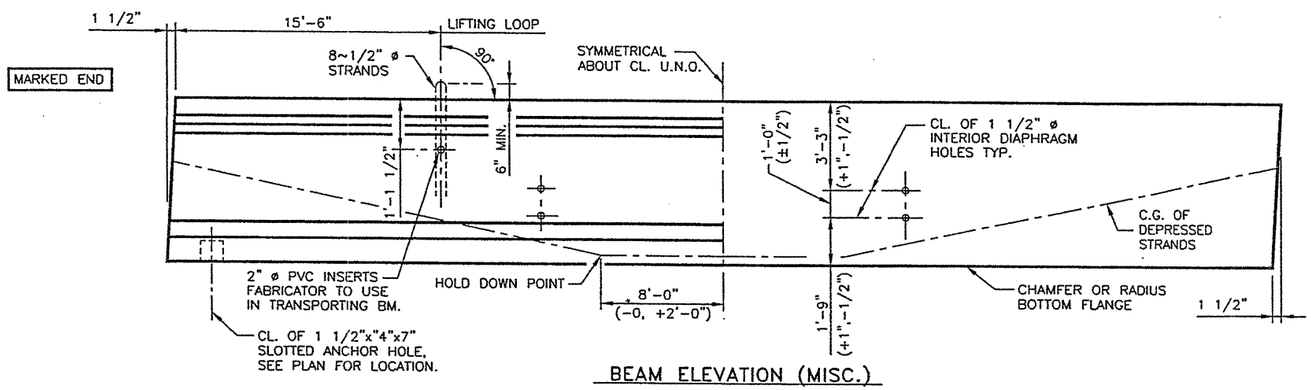

BEAM ELEVATION (MISC.)

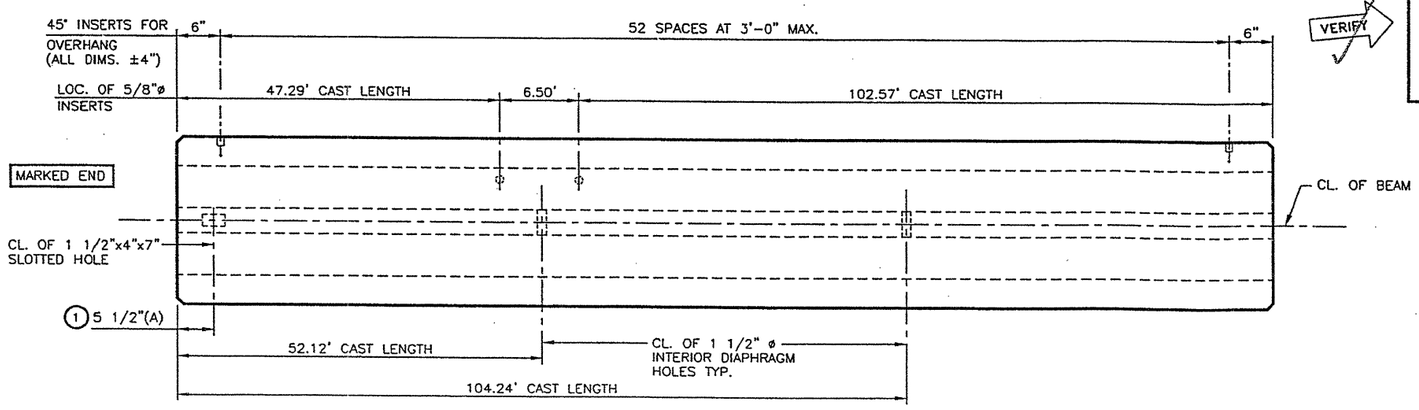

NO SKEW

BEAM PLAN

NO SKEW

REINFORCING STEEL TABLE

BAR MARK	BAR SIZE	TOTAL QUANTITY PER BM.	TOTAL QUANTITY PER SHT.	BAR LENGTH
R11	#4	133	133	SEE SHT. S-"VIM"
S11	#3	32	32	SEE SHT. S-"VIM"
U11	#5	76	76	156'-2"
V11	#3	56	56	SEE SHT. S-"VIM"
W11	#5	4	4	SEE SHT. S-"VIM"
X11	#3	113	113	SEE SHT. S-"VIM"
Y11	#6	4	4	SEE SHT. S-"VIM"

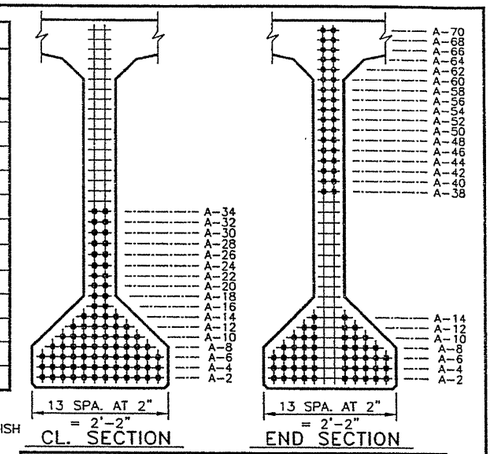

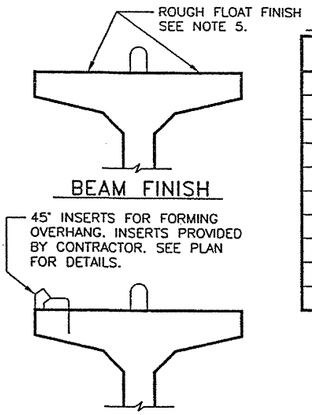

BEAM FINISH

TOP FLANGE INSERTS
(SUPPLIED BY CONTRACTOR)

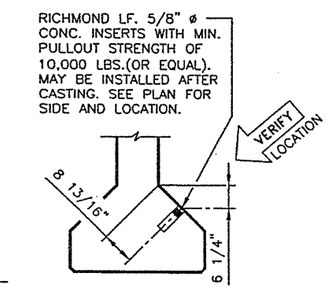

SIGN & BRACKET INSERTS

LO-LAX STRAND PATTERN

DESIGN REF. NO.	: SHEET 656
TOTAL STRAND QUANTITY	: 84
STRAND SIZE AND TYPE	: 1/2" ø 270 ksi TO 31.0k
ECCENTRICITY AT CL. (IN.)	: 25.37
ECCENTRICITY AT END (IN.)	: 10.79
DEPRESSED QUANTITY AND LOC. (IN.)	: 34 AT A-70
TOTAL OF STRAIGHT STRANDS	: 50
RELEASE STRENGTH (PSI)	: 6447
MIN. 28 DAY STRENGTH (PSI)	: 8645
APPROX. UPLIFT FORCE (kips)	: 46.38

NOTES:

1) ALL UNANSWERED VERIFIES ARE CONSIDERED CORRECT.
2) ALL DIMENSIONS PERTAINING TO STRANDS AND REINFORCING BARS WILL BE CENTER TO CENTER.
3) FOR ALL DIMENSIONS AND DETAILS NOT SHOWN SEE STANDARD SHEET S-"VIM".
4) CONTRACTOR TO CUT LIFTING LOOPS TO 2" AFTER ERECTION.
5) ALL BEAMS SHALL HAVE A ROUGH FLOATED FINISH AS SPECIFIED IN TxDOT'S "TEXAS STANDARD SPECIFICATIONS" ITEM 424.4.5.a.
6) ON BRIDGE, BEAMS TO BE PLACED AS MARKS ARE SHOW ON ERECTION SHEETS. ON FABRICATION SHEETS, BEAMS ARE DETAILED WITH MARKS ON LEFT SIDE.

VERIFY

ENGINEER'S NOTES:

1 BEAM CLEARANCE OF 3" WAS USED BASED ON CONTRACT PLANS BEAM LENGTH.

BEAM BLOCKOUT WAS OMITTED, AS PER CONTRACT PLANS SHEET 666, DUE TO BEAM HAUNCH GREATER THAN 2" AT CL. OF BEARING.

TOTAL QUANTITY OF RICHMOND LF. 5/8" ø INSERTS, OR EQUAL, ON THIS SHEET = 2

TOTAL QUANTITY OF 45° INSERTS FOR OVERHANG, SUPPLIED BY CONTRACTOR, ON THIS SHEET = 53

BEAM TYPE = "VIM"
BEAM MARK = VIM-1
TOTAL BEAMS ON THIS SHEET = 1
TOTAL LINEAR FOOTAGE THIS SHEET = 156.28'

FABRICATOR: BEXAR CONCRETE WORKS I, LTD.

CONTRACTOR: SUMMIT CONTRACTING, INC.

SHOP PLANS WERE PREPARED BY: BEXAR CONCRETE WORKS I, LTD.

☐ NO EXCEPTIONS
☑ EXCEPTIONS AS NOTED
☐ REJECTED - RESUBMIT

KBR

Reviewed as to general compliance with the Contract Documents. This review does not relieve the Contractor/Supplier of his responsibility for adequacy of design correctness of dimensions, and accuracy of detail.

By T. Shanks Date: 7-23-04

STATE DISTRICT	FEDERAL REGION	STATE	FEDERAL AID PROJECT NO.			
LAREDO	6	TEXAS	NH-2002 (79)			
COUNTY			CONTROL	SECTION	JOB	HIGHWAY
WEBB			0018	05	062,ETC.	IH 35

JOB. NO.	DRAWN BY	CHECKED BY	DATE OUT	SHEET NO.
2509	MJR	JDH	07-02-04	VIM-1

FABRICATION SHEET

2509VIM1.DWG

SHEET NO. 670 RR

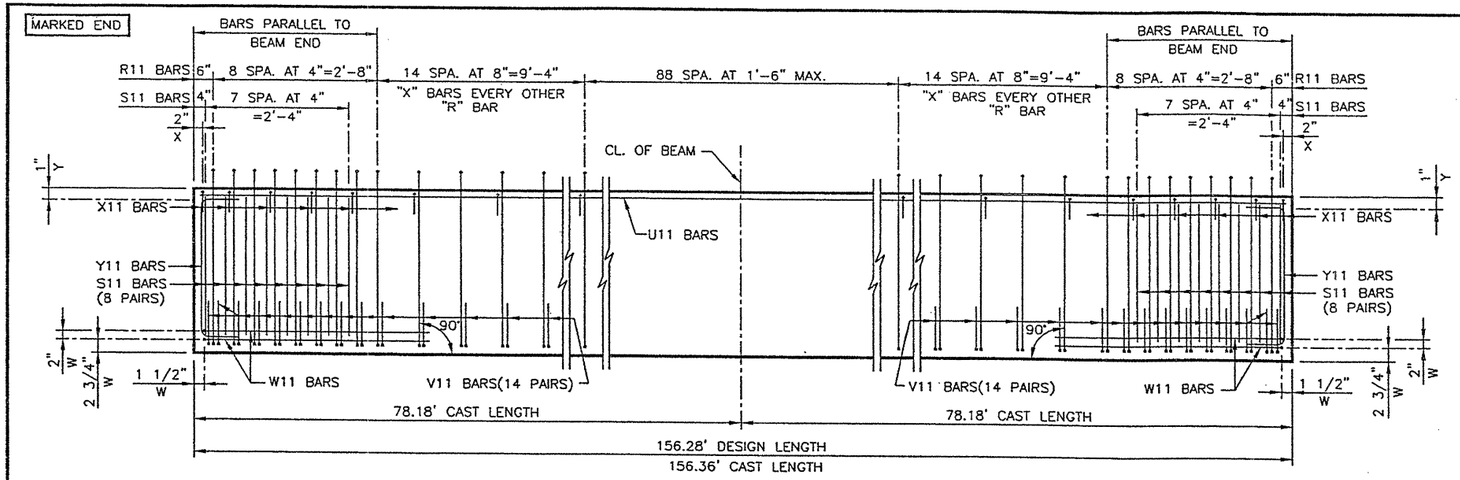

BEAM ELEVATION (REINF.)

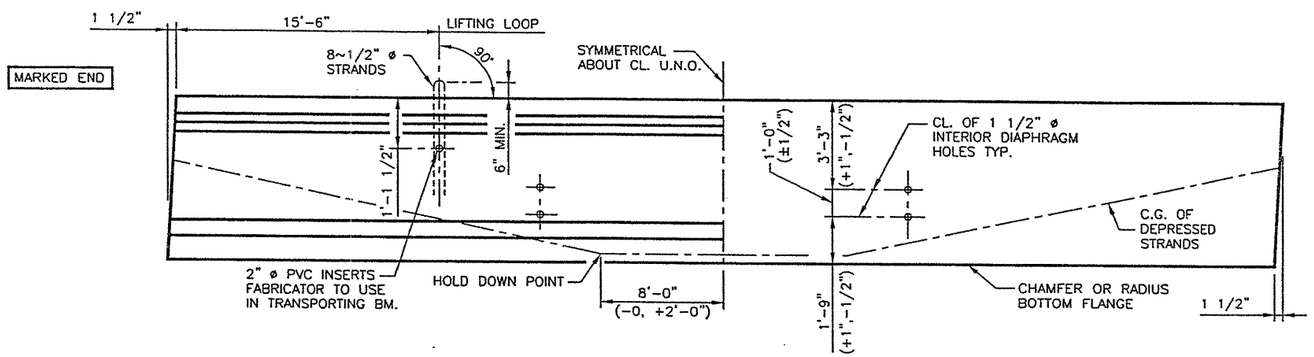

BEAM ELEVATION (MISC.)

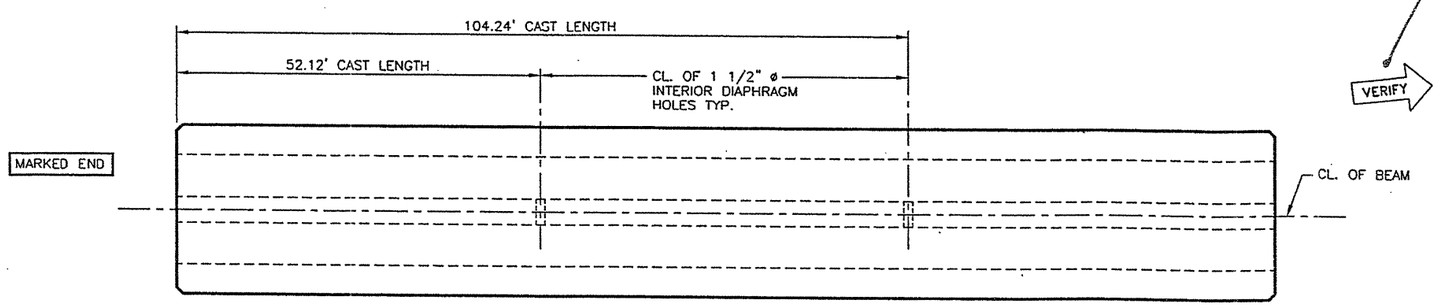

NO SKEW

BEAM PLAN

NO SKEW

REINFORCING STEEL TABLE

BAR MARK	BAR SIZE	TOTAL QUANTITY PER BM.	TOTAL QUANTITY PER SHT.	BAR LENGTH
R11	#4	133	1197	SEE SHT. S-"VIM"
S11	#5 7	32	288	SEE SHT. S-"VIM"
U11	#5	2 18	18 54	156'-2"
V11	#3	56	504	SEE SHT. S-"VIM"
W11	#5	4	36	SEE SHT. S-"VIM"
X11	#3	113	1017	SEE SHT. S-"VIM"
Y11	#6	4	36	SEE SHT. S-"VIM"

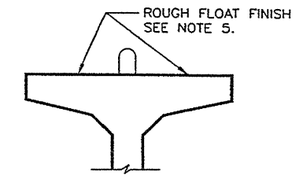

BEAM FINISH

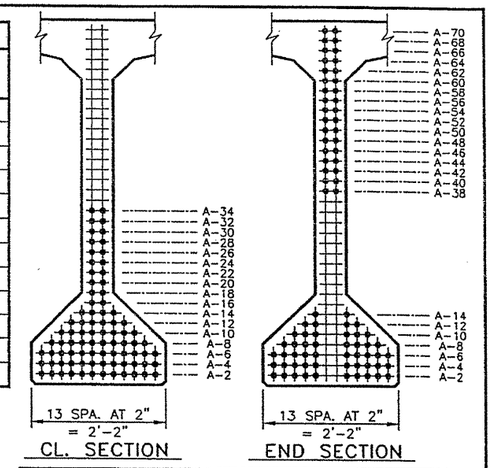

CL. SECTION END SECTION

LO-LAX STRAND PATTERN

DESIGN REF. NO.	: SHEET 656
TOTAL STRAND QUANTITY	: 84
STRAND SIZE AND TYPE : 1/2" ø 270 ksi TO 31.0k	
ECCENTRICITY AT CL. (IN.)	: 25.37
ECCENTRICITY AT END (IN.)	: 10.79
DEPRESSED QUANTITY AND LOC. (IN.)	: 34 AT A-70
TOTAL OF STRAIGHT STRANDS	: 50
RELEASE STRENGTH (PSI)	: 6447
MIN. 28 DAY STRENGTH (PSI)	: 8645
APPROX. UPLIFT FORCE (kips)	: 46.38

NOTES:

1) ALL UNANSWERED VERIFIES ARE CONSIDERED CORRECT.
2) ALL DIMENSIONS PERTAINING TO STRANDS AND REINFORCING BARS WILL BE CENTER TO CENTER.
3) FOR ALL DIMENSIONS AND DETAILS NOT SHOWN SEE STANDARD SHEET S-"VIM".
4) CONTRACTOR TO CUT LIFTING LOOPS TO 2" AFTER ERECTION.
5) ALL BEAMS SHALL HAVE A ROUGH FLOATED FINISH AS SPECIFIED IN TxDOT'S "TEXAS STANDARD SPECIFICATIONS" ITEM 424.4.5.a.
6) ON BRIDGE, BEAMS TO BE PLACED AS MARKS ARE SHOW ON ERECTION SHEETS. ON FABRICATION SHEETS, BEAMS ARE DETAILED WITH MARKS ON LEFT SIDE.

VERIFY

ENGINEER'S NOTES:

BEAM CLEARANCE OF 3" WAS USED BASED ON CONTRACT PLANS BEAM LENGTH.

BEAM BLOCKOUT WAS OMITTED, AS PER CONTRACT PLANS SHEET 666, DUE TO BEAM HAUNCH GREATER THAN 2" AT CL. OF BEARING.

☐ NO EXCEPTIONS
☑ EXCEPTIONS AS NOTED
☐ REJECTED - RESUBMIT

KBR

Reviewed as to general compliance with the Contract Documents. This review does not relieve the Contractor/Supplier of his responsibility for adequacy of design correctness of dimensions, and accuracy of detail.

By T. Shanks Date: 7-23-04

BEAM TYPE	= "VIM"
BEAM MARK	= VIM-2
TOTAL BEAMS ON THIS SHEET	= 9
TOTAL LINEAR FOOTAGE THIS SHEET	= 1406.52

FABRICATOR: BEXAR CONCRETE WORKS I, LTD.

CONTRACTOR: SUMMIT CONTRACTING, INC.

SHOP PLANS WERE PREPARED BY: BEXAR CONCRETE WORKS I, LTD.

STATE DISTRICT	FEDERAL REGION	STATE	FEDERAL AID PROJECT NO.			
LAREDO	6	TEXAS	NH-2002 (79)			
COUNTY			CONTROL	SECTION	JOB	HIGHWAY
WEBB			0018	05	062,ETC.	IH 35

JOB. NO.	DRAWN BY	CHECKED BY	DATE OUT	SHEET NO.
2509	MJR	JDH	07-02-04	VIM-2

FABRICATION SHEET

2509VIM2.DWG

SHEET NO. 670 SS

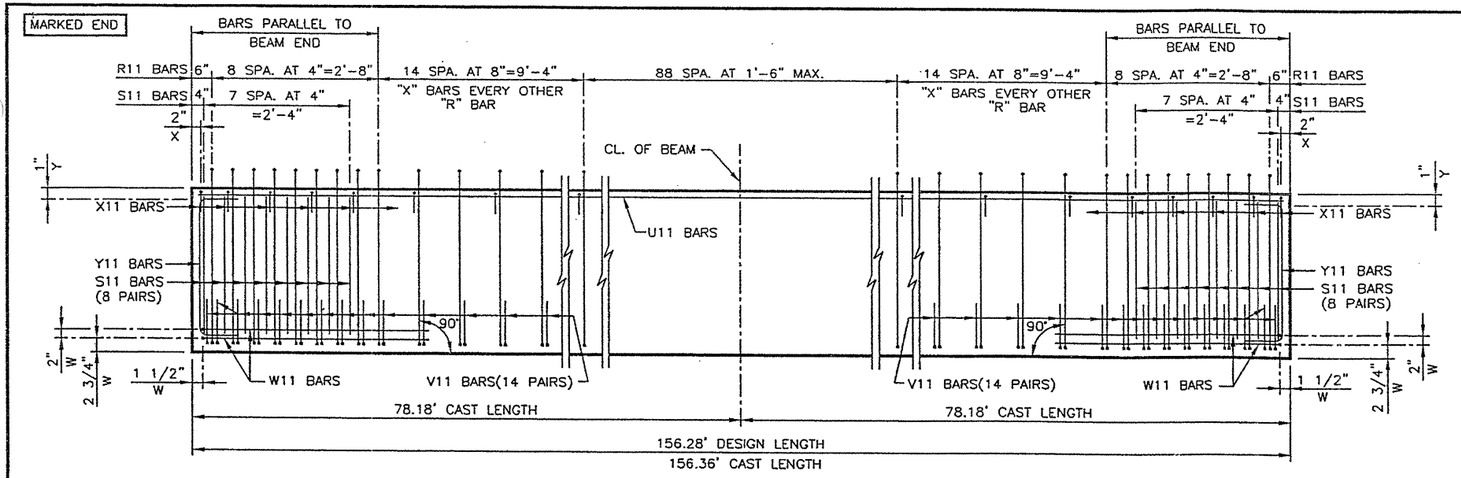

BEAM ELEVATION (REINF.)

REINFORCING STEEL TABLE				
BAR MARK	BAR SIZE	TOTAL QUANTITY PER BM.	TOTAL QUANTITY PER SHT.	BAR LENGTH
R11	#4	133	133	SEE SHT. S-"VIM"
S11	#5	32	32	SEE SHT. S-"VIM"
U11	#5	26	26	156'-2"
V11	#3	56	56	SEE SHT. S-"VIM"
W11	#5	4	4	SEE SHT. S-"VIM"
X11	#3	113	113	SEE SHT. S-"VIM"
Y11	#6	4	4	SEE SHT. S-"VIM"

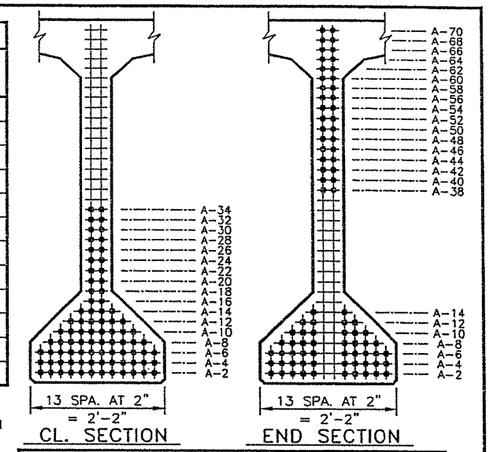

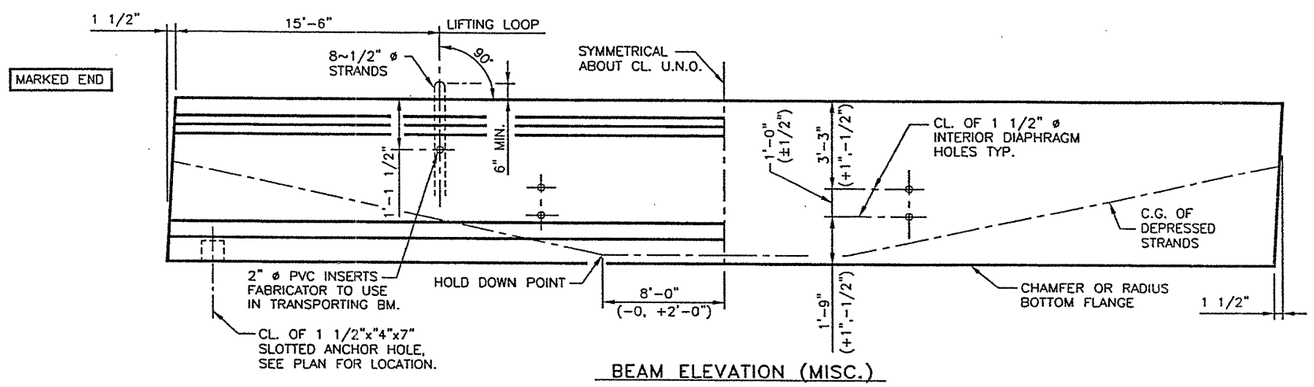

BEAM ELEVATION (MISC.)

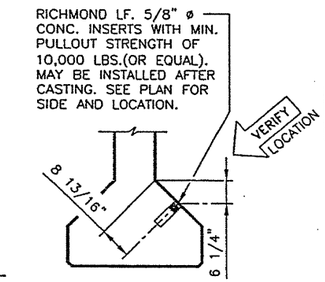

SIGN & BRACKET INSERTS

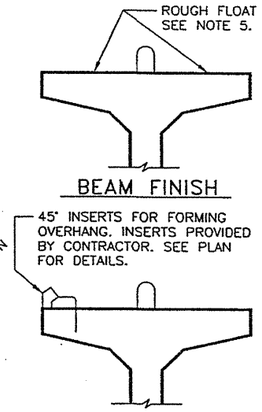

BEAM FINISH

TOP FLANGE INSERTS
(SUPPLIED BY CONTRACTOR)

LO-LAX STRAND PATTERN	
DESIGN REF. NO.	: SHEET 656
TOTAL STRAND QUANTITY	: 84
STRAND SIZE AND TYPE : 1/2" ø 270 ksi TO 31.0k	
ECCENTRICITY AT CL. (IN.)	: 25.37
ECCENTRICITY AT END (IN.)	: 10.79
DEPRESSED QUANTITY AND LOC. (IN.)	: 34 AT A-70
TOTAL OF STRAIGHT STRANDS	: 50
RELEASE STRENGTH (PSI)	: 6447
MIN. 28 DAY STRENGTH (PSI)	: 8645
APPROX. UPLIFT FORCE (kips)	: 46.38

NOTES:

1) ALL UNANSWERED VERIFIES ARE CONSIDERED CORRECT.
2) ALL DIMENSIONS PERTAINING TO STRANDS AND REINFORCING BARS WILL BE CENTER TO CENTER.
3) FOR ALL DIMENSIONS AND DETAILS NOT SHOWN SEE STANDARD SHEET S-"VIM".
4) CONTRACTOR TO CUT LIFTING LOOPS TO 2" AFTER ERECTION.
5) ALL BEAMS SHALL HAVE A ROUGH FLOATED FINISH AS SPECIFIED IN TxDOT'S "TEXAS STANDARD SPECIFICATIONS" ITEM 424.4.5.a.
6) ON BRIDGE, BEAMS TO BE PLACED AS MARKS ARE SHOW ON ERECTION SHEETS. ON FABRICATION SHEETS, BEAMS ARE DETAILED WITH MARKS ON LEFT SIDE.

VERIFY

ENGINEER'S NOTES:

(1) BEAM CLEARANCE OF 3" WAS USED BASED ON CONTRACT PLANS BEAM LENGTH.

BEAM BLOCKOUT WAS OMITTED, AS PER CONTRACT PLANS SHEET 666, DUE TO BEAM HAUNCH GREATER THAN 2" AT CL. OF BEARING.

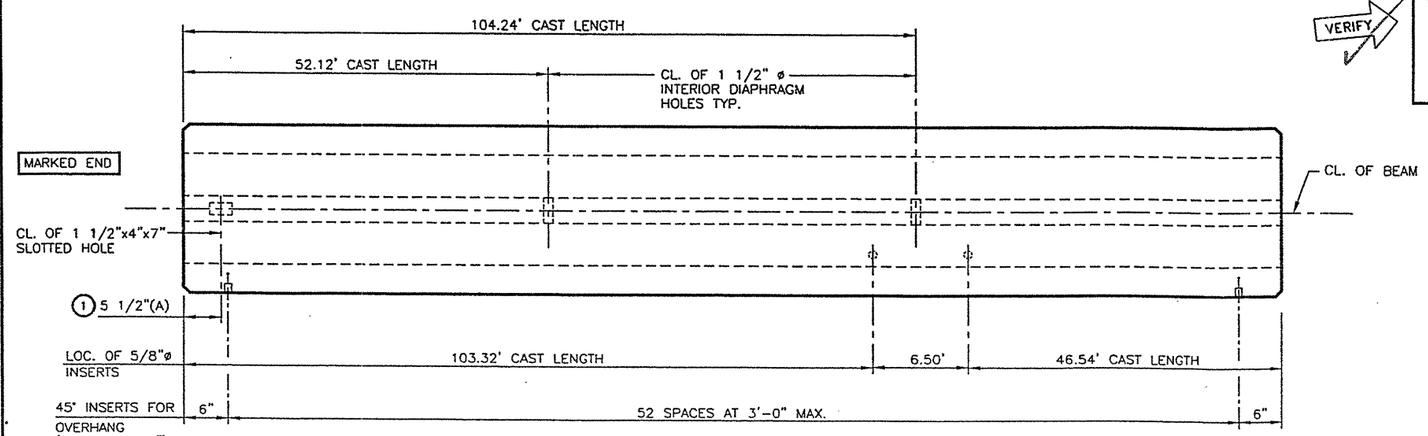

BEAM PLAN

☐ NO EXCEPTIONS
☑ EXCEPTIONS AS NOTED
☐ REJECTED - RESUBMIT
KBR
Reviewed as to general compliance with the Contract Documents. This review does not relieve the Contractor/Supplier of his responsibility for adequacy of design correctness of dimensions, and accuracy of detail.
By T. Slanks Date: 7-23-04

TOTAL QUANTITY OF RICHMOND LF. 5/8" ø INSERTS, OR EQUAL, ON THIS SHEET = 2

TOTAL QUANTITY OF 45° INSERTS FOR OVERHANG, SUPPLIED BY CONTRACTOR, ON THIS SHEET = 53

BEAM TYPE = "VIM"
BEAM MARK = VIM-3
TOTAL BEAMS ON THIS SHEET = 1
TOTAL LINEAR FOOTAGE THIS SHEET = 156.28'

FABRICATOR: BEXAR CONCRETE WORKS I, LTD.

CONTRACTOR: SUMMIT CONTRACTING, INC.

SHOP PLANS WERE PREPARED BY: BEXAR CONCRETE WORKS I, LTD.

STATE DISTRICT	FEDERAL REGION	STATE	FEDERAL AID PROJECT NO.			
LAREDO	6	TEXAS	NH-2002 (79)			
COUNTY			CONTROL	SECTION	JOB	HIGHWAY
WEBB			0018	05	062,ETC.	IH 35
JOB. NO.	DRAWN BY	CHECKED BY	DATE OUT	SHEET NO.		
2509	MJR	JDH	07-02-04	VIM-3		

FABRICATION SHEET

2509VIM3.DWG

SHEET NO. 670 TT

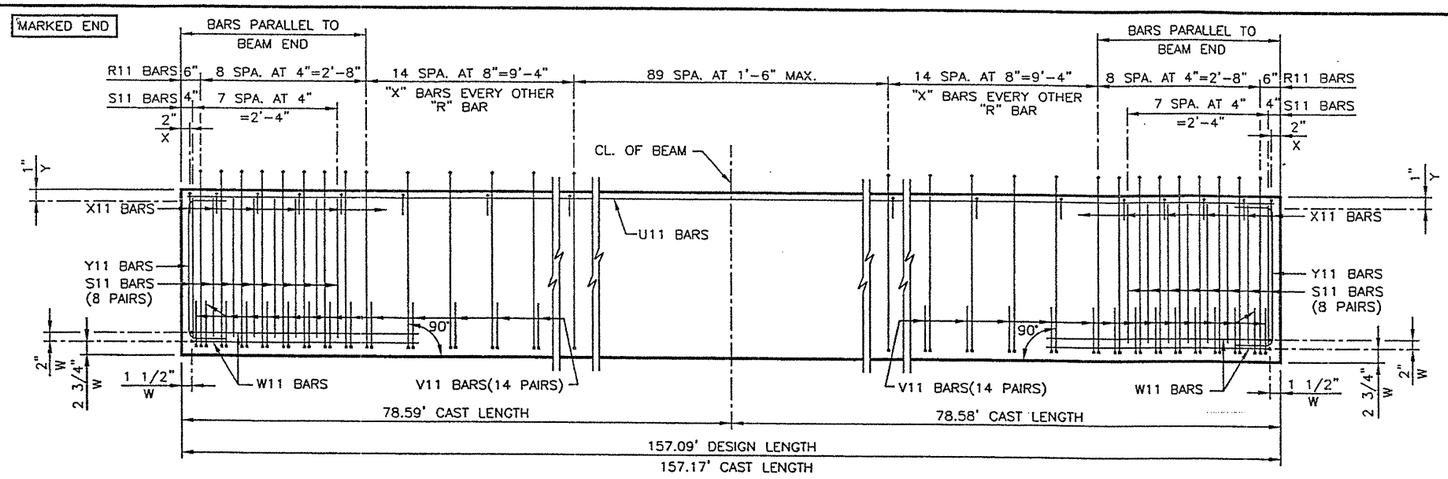

BEAM ELEVATION (REINF.)

REINFORCING STEEL TABLE				
BAR MARK	BAR SIZE	TOTAL QUANTITY PER BM.	TOTAL QUANTITY PER SHT.	BAR LENGTH
R11	#4	134	134	SEE SHT. S-"VIM"
S11	#5	32	32	SEE SHT. S-"VIM"
U11	#5	26	26	156'-11"
V11	#3	56	56	SEE SHT. S-"VIM"
W11	#5	4	4	SEE SHT. S-"VIM"
X11	#3	114	114	SEE SHT. S-"VIM"
Y11	#6	4	4	SEE SHT. S-"VIM"

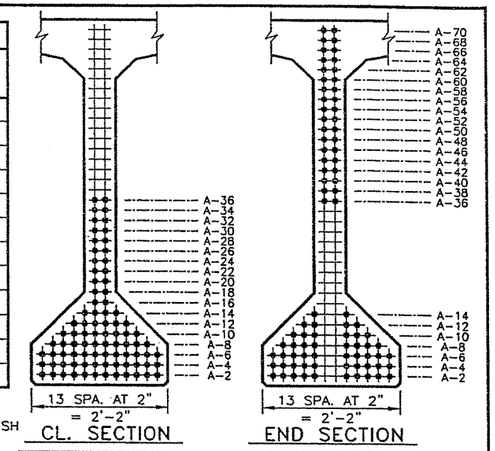

CL. SECTION END SECTION

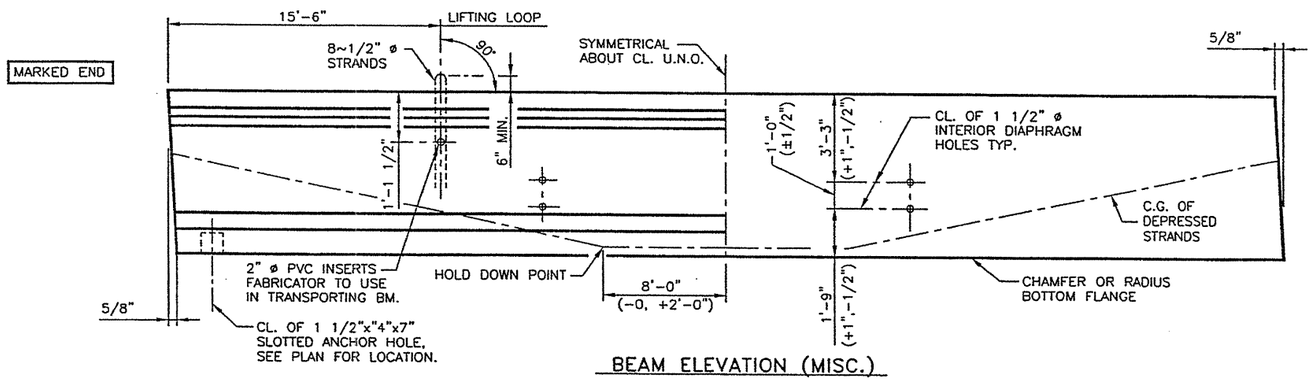

BEAM ELEVATION (MISC.)

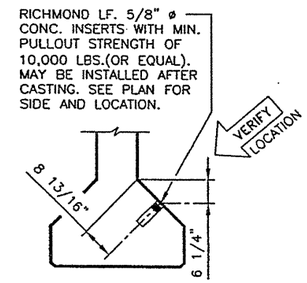

SIGN & BRACKET INSERTS

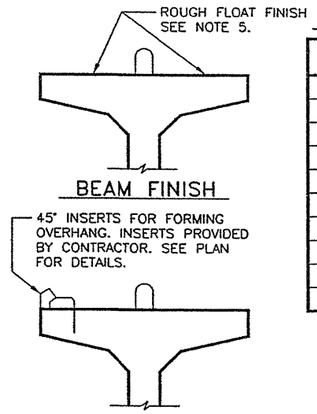

BEAM FINISH

TOP FLANGE INSERTS
(SUPPLIED BY CONTRACTOR)

LO-LAX STRAND PATTERN	
DESIGN REF. NO.	: SHEET 665
TOTAL STRAND QUANTITY	: 86
STRAND SIZE AND TYPE : 1/2" ø 270 ksi TO 31.0k	
ECCENTRICITY AT CL. (IN.)	: 24.79
ECCENTRICITY AT END (IN.)	: 10.55
DEPRESSED QUANTITY AND LOC. (IN.)	: 36 AT A-70
TOTAL OF STRAIGHT STRANDS	: 50
RELEASE STRENGTH (PSI)	: 6549
MIN. 28 DAY STRENGTH (PSI)	: 8886
APPROX. UPLIFT FORCE (kips)	: 46.10

NOTES:

1) ALL UNANSWERED VERIFIES ARE CONSIDERED CORRECT.
2) ALL DIMENSIONS PERTAINING TO STRANDS AND REINFORCING BARS WILL BE CENTER TO CENTER.
3) FOR ALL DIMENSIONS AND DETAILS NOT SHOWN SEE STANDARD SHEET S-"VIM".
4) CONTRACTOR TO CUT LIFTING LOOPS TO 2" AFTER ERECTION.
5) ALL BEAMS SHALL HAVE A ROUGH FLOATED FINISH AS SPECIFIED IN TxDOT'S "TEXAS STANDARD SPECIFICATIONS" ITEM 424.4.5.a.
6) ON BRIDGE, BEAMS TO BE PLACED AS MARKS ARE SHOW ON ERECTION SHEETS. ON FABRICATION SHEETS, BEAMS ARE DETAILED WITH MARKS ON LEFT SIDE.

VERIFY

ENGINEER'S NOTES:

(1) BEAM CLEARANCE OF 3" WAS USED BASED ON CONTRACT PLANS BEAM LENGTH.

BEAM BLOCKOUT WAS OMITTED, AS PER CONTRACT PLANS SHEET 666, DUE TO BEAM HAUNCH GREATER THAN 2" AT CL. OF BEARING.

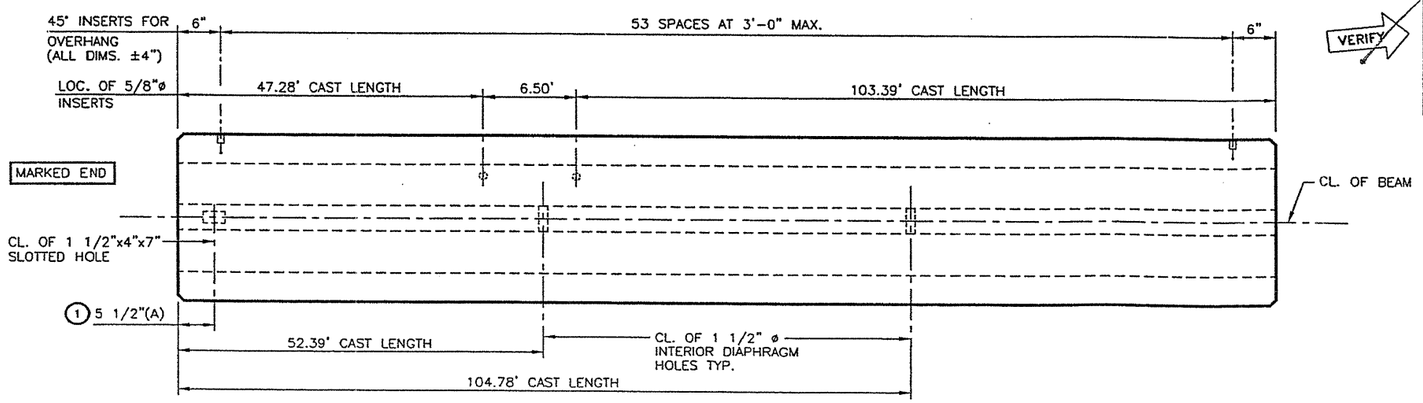

NO SKEW

BEAM PLAN

NO SKEW

☐ NO EXCEPTIONS
☑ EXCEPTIONS AS NOTED
☐ REJECTED - RESUBMIT

KBR

Reviewed as to general compliance with the Contract Documents. This review does not relieve the Contractor/Supplier of his responsibility for adequacy of design correctness of dimensions, and accuracy of detail.

By T. Shanks Date: 7-23-04

TOTAL QUANTITY OF RICHMOND LF. 5/8" ø INSERTS, OR EQUAL, ON THIS SHEET = 2

TOTAL QUANTITY OF 45° INSERTS FOR OVERHANG, SUPPLIED BY CONTRACTOR, ON THIS SHEET = 54

BEAM TYPE = "VIM"
BEAM MARK = VIM-4
TOTAL BEAMS ON THIS SHEET = 1
TOTAL LINEAR FOOTAGE THIS SHEET = 157.09'

FABRICATOR: BEXAR CONCRETE WORKS I, LTD.

CONTRACTOR: SUMMIT CONTRACTING, INC.

SHOP PLANS WERE PREPARED BY: BEXAR CONCRETE WORKS I, LTD.

STATE DISTRICT	FEDERAL REGION	STATE	FEDERAL AID PROJECT NO.
LAREDO	6	TEXAS	NH-2002 (79)

COUNTY	CONTROL	SECTION	JOB	HIGHWAY
WEBB	0018	05	062,ETC.	IH 35

JOB. NO.	DRAWN BY	CHECKED BY	DATE OUT	SHEET NO.
2509	MJR	JDH	07-02-04	VIM-4

FABRICATION SHEET

2509VIM4.DWG

SHEET NO. 670 UU

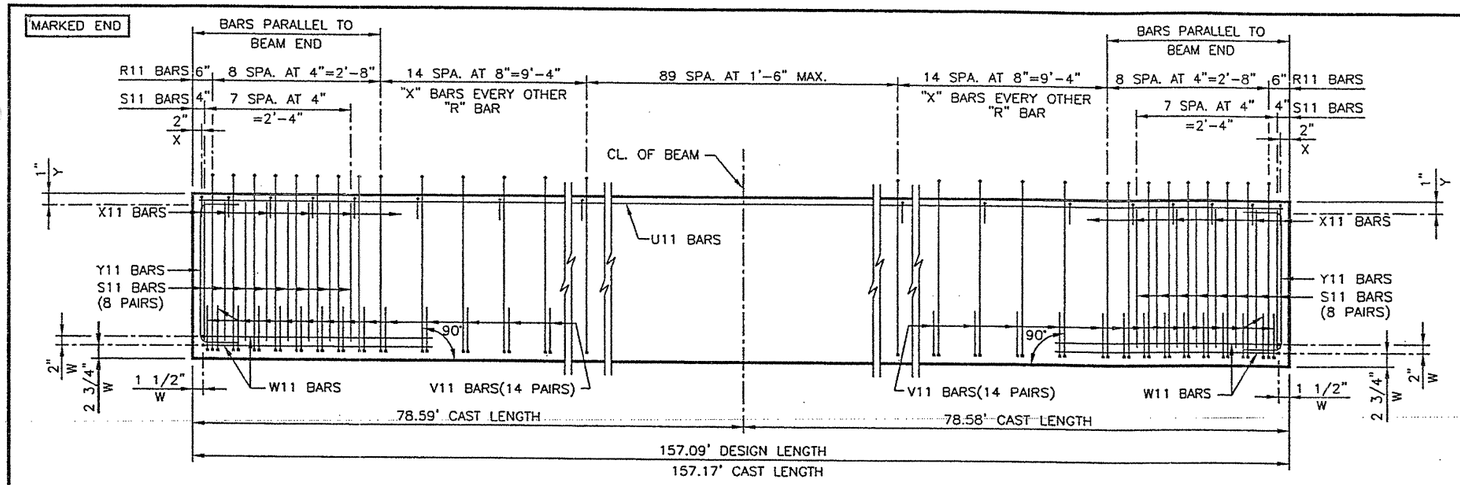

BEAM ELEVATION (REINF.)

REINFORCING STEEL TABLE				
BAR MARK	BAR SIZE	TOTAL QUANTITY PER BM.	TOTAL QUANTITY PER SHT.	BAR LENGTH
R11	#4	134	1072	SEE SHT. S-"VIM"
S11	#5	32	256	SEE SHT. S-"VIM"
U11	#5	24	192	156'-11"
V11	#3	56	448	SEE SHT. S-"VIM"
W11	#5	4	32	SEE SHT. S-"VIM"
X11	#3	114	912	SEE SHT. S-"VIM"
Y11	#6	4	32	SEE SHT. S-"VIM"

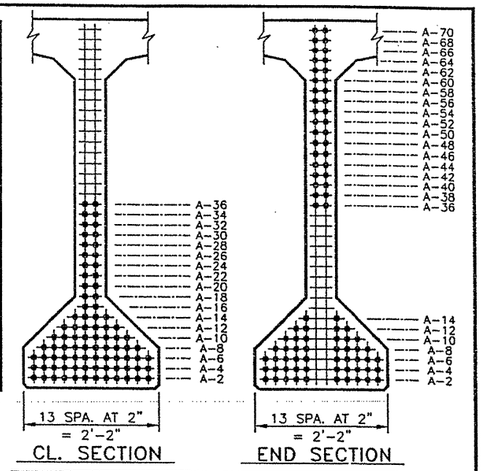

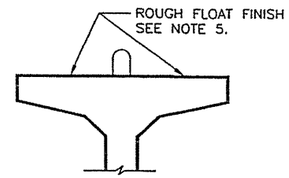

BEAM FINISH

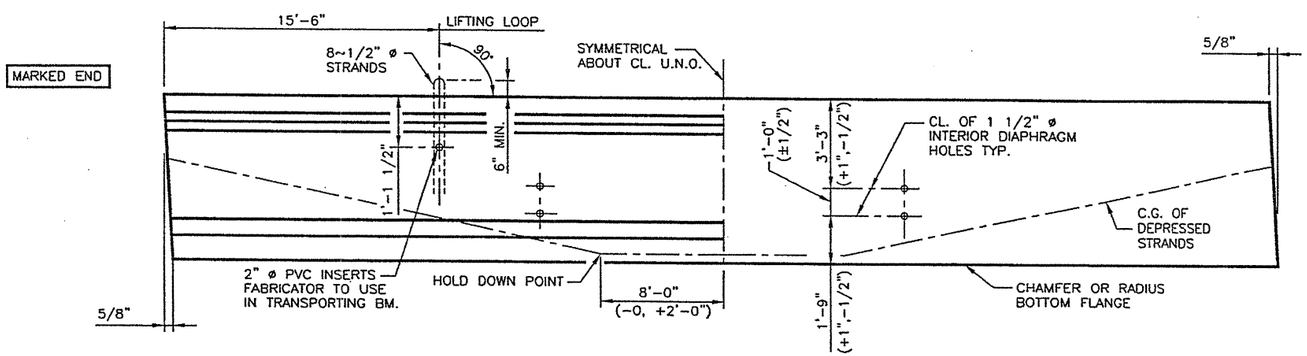

BEAM ELEVATION (MISC.)

LO-LAX STRAND PATTERN	
DESIGN REF. NO.	: SHEET 665
TOTAL STRAND QUANTITY	: 86
STRAND SIZE AND TYPE : 1/2" ø 270 ksi TO 31.0k	
ECCENTRICITY AT CL. (IN.)	: 24.79
ECCENTRICITY AT END (IN.)	: 10.55
DEPRESSED QUANTITY AND LOC. (IN.)	: 36 AT A-70
TOTAL OF STRAIGHT STRANDS	: 50
RELEASE STRENGTH (PSI)	: 6549
MIN. 28 DAY STRENGTH (PSI)	: 8886
APPROX. UPLIFT FORCE (kips)	: 46.10

NOTES:

1) ALL UNANSWERED VERIFIES ARE CONSIDERED CORRECT.
2) ALL DIMENSIONS PERTAINING TO STRANDS AND REINFORCING BARS WILL BE CENTER TO CENTER.
3) FOR ALL DIMENSIONS AND DETAILS NOT SHOWN SEE STANDARD SHEET S-"VIM".
4) CONTRACTOR TO CUT LIFTING LOOPS TO 2" AFTER ERECTION.
5) ALL BEAMS SHALL HAVE A ROUGH FLOATED FINISH AS SPECIFIED IN TxDOT'S "TEXAS STANDARD SPECIFICATIONS" ITEM 424.4.5.a.
6) ON BRIDGE, BEAMS TO BE PLACED AS MARKS ARE SHOW ON ERECTION SHEETS. ON FABRICATION SHEETS, BEAMS ARE DETAILED WITH MARKS ON LEFT SIDE.

VERIFY

ENGINEER'S NOTES:

BEAM CLEARANCE OF 3" WAS USED BASED ON CONTRACT PLANS BEAM LENGTH.

BEAM BLOCKOUT WAS OMITTED, AS PER CONTRACT PLANS SHEET 666, DUE TO BEAM HAUNCH GREATER THAN 2" AT CL. OF BEARING.

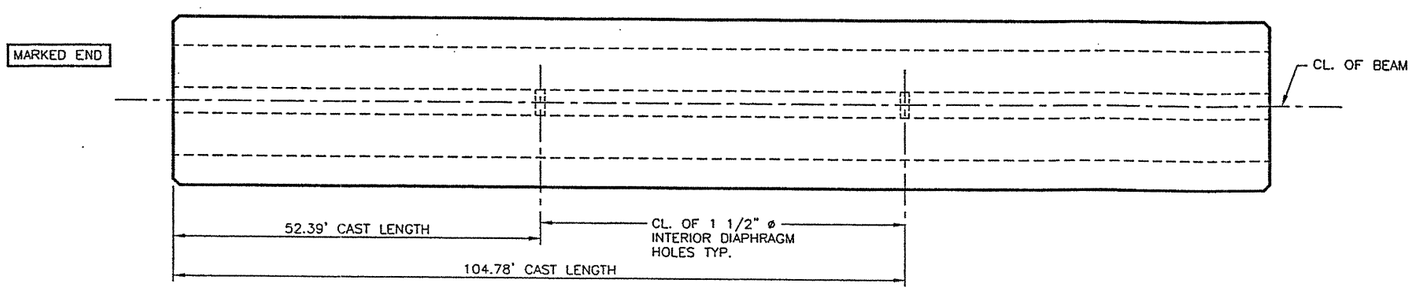

NO SKEW

BEAM PLAN

NO SKEW

☐ NO EXCEPTIONS
☑ EXCEPTIONS AS NOTED
☐ REJECTED - RESUBMIT

KBR

Reviewed as to general compliance with the Contract Documents. This review does not relieve the Contractor/Supplier of his responsibility for adequacy of design correctness of dimensions, and accuracy of detail.

By T. Shanks Date: 7-23-04

2509VIM5.DWG

BEAM TYPE	= "VIM"
BEAM MARK	= VIM-5
TOTAL BEAMS ON THIS SHEET	= 8
TOTAL LINEAR FOOTAGE THIS SHEET	= 1256.72'

FABRICATOR: BEXAR CONCRETE WORKS I, LTD.

CONTRACTOR: SUMMIT CONTRACTING, INC.

SHOP PLANS WERE PREPARED BY: BEXAR CONCRETE WORKS I, LTD.

STATE DISTRICT	FEDERAL REGION	STATE	FEDERAL AID PROJECT NO.			
LAREDO	6	TEXAS	NH-2002 (79)			
COUNTY			CONTROL	SECTION	JOB	HIGHWAY
WEBB			0018	05	062,ETC.	IH 35
JOB. NO.	DRAWN BY	CHECKED BY	DATE OUT	SHEET NO.		
2509	MJR	JDH	07-02-04	VIM-5		

FABRICATION SHEET

SHEET NO. 670 VV

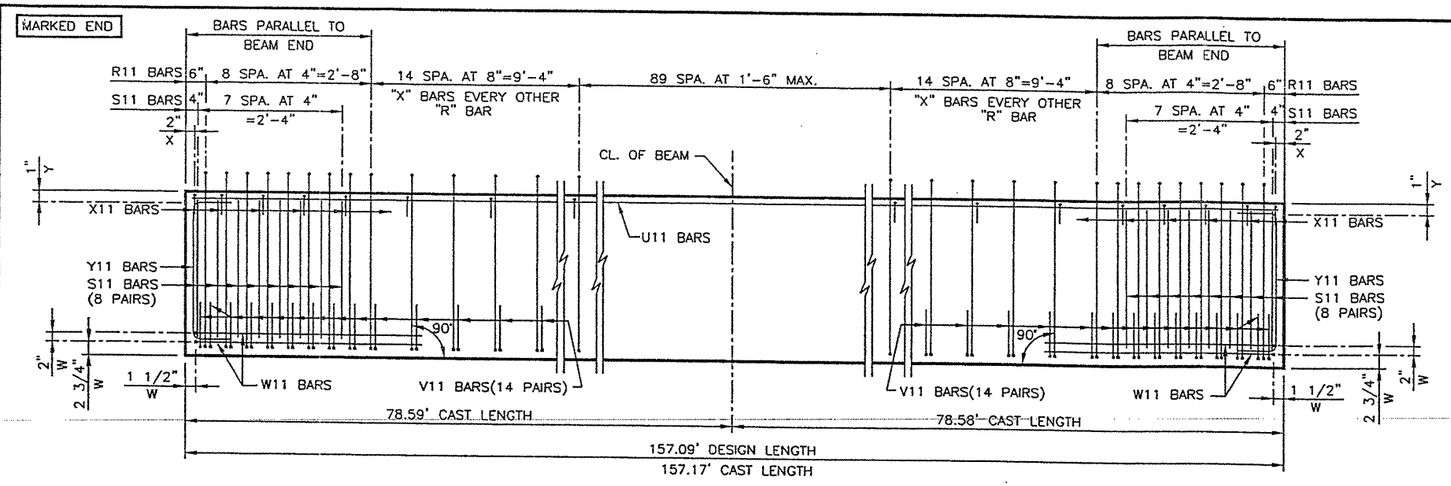

BEAM ELEVATION (REINF.)

REINFORCING STEEL TABLE				
BAR MARK	BAR SIZE	TOTAL QUANTITY PER BM.	TOTAL QUANTITY PER SHT.	BAR LENGTH
R11	#4	134	134	SEE SHT. S-"VIM"
S11	#5	32	32	SEE SHT. S-"VIM"
U11	#5	2 @	2 @	156'-11"
V11	#3	56	56	SEE SHT. S-"VIM"
W11	#5	4	4	SEE SHT. S-"VIM"
X11	#3	114	114	SEE SHT. S-"VIM"
Y11	#6	4	4	SEE SHT. S-"VIM"

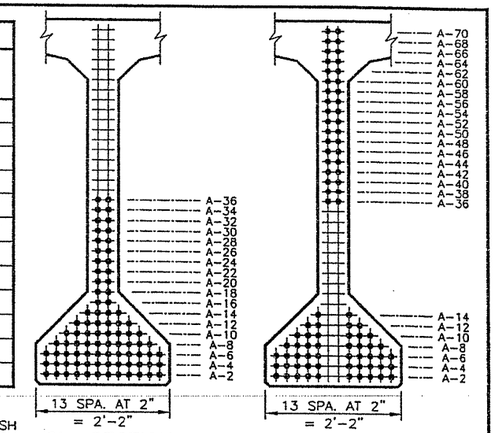

CL. SECTION

END SECTION

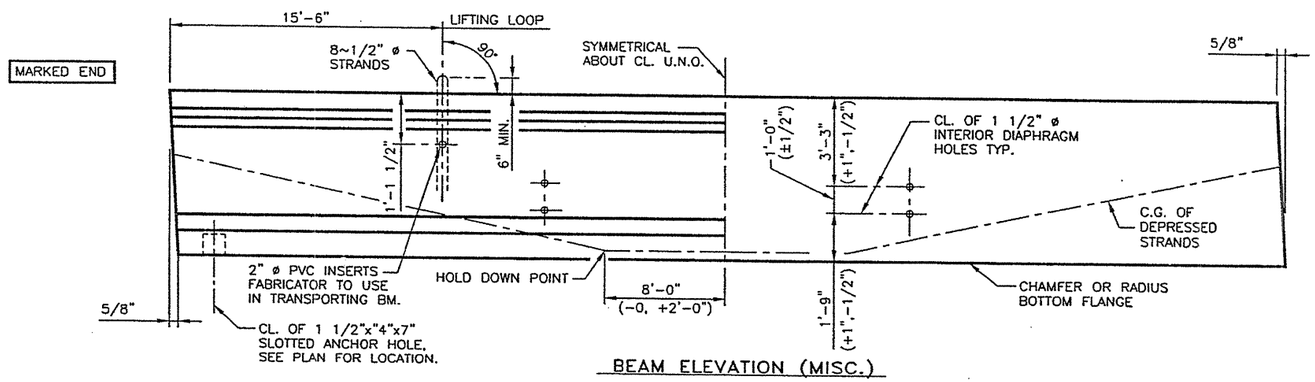

BEAM ELEVATION (MISC.)

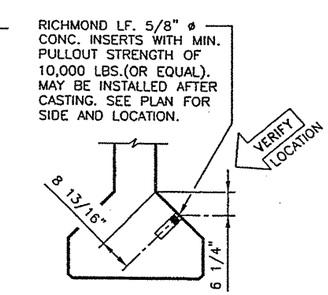

SIGN & BRACKET INSERTS

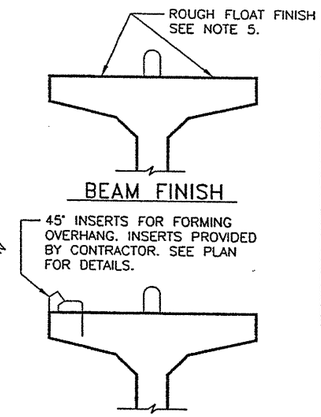

BEAM FINISH

TOP FLANGE INSERTS
(SUPPLIED BY CONTRACTOR)

LO-LAX STRAND PATTERN	
DESIGN REF. NO.	: SHEET 665
TOTAL STRAND QUANTITY	: 86
STRAND SIZE AND TYPE : 1/2" ø 270 ksi TO 31.0k	
ECCENTRICITY AT CL. (IN.)	: 24.79
ECCENTRICITY AT END (IN.)	: 10.55
DEPRESSED QUANTITY AND LOC. (IN.)	: 36 AT A-70
TOTAL OF STRAIGHT STRANDS	: 50
RELEASE STRENGTH (PSI)	: 6549
MIN. 28 DAY STRENGTH (PSI)	: 8886
APPROX. UPLIFT FORCE (kips)	: 46.10

NOTES:

1) ALL UNANSWERED VERIFIES ARE CONSIDERED CORRECT.
2) ALL DIMENSIONS PERTAINING TO STRANDS AND REINFORCING BARS WILL BE CENTER TO CENTER.
3) FOR ALL DIMENSIONS AND DETAILS NOT SHOWN SEE STANDARD SHEET S-"VIM".
4) CONTRACTOR TO CUT LIFTING LOOPS TO 2" AFTER ERECTION.
5) ALL BEAMS SHALL HAVE A ROUGH FLOATED FINISH AS SPECIFIED IN TxDOT'S "TEXAS STANDARD SPECIFICATIONS" ITEM 424.4.5.a.
6) ON BRIDGE, BEAMS TO BE PLACED AS MARKS ARE SHOW ON ERECTION SHEETS. ON FABRICATION SHEETS, BEAMS ARE DETAILED WITH MARKS ON LEFT SIDE.

VERIFY

ENGINEER'S NOTES:

(1) BEAM CLEARANCE OF 3" WAS USED BASED ON CONTRACT PLANS BEAM LENGTH.

BEAM BLOCKOUT WAS OMITTED, AS PER CONTRACT PLANS SHEET 666, DUE TO BEAM HAUNCH GREATER THAN 2" AT CL. OF BEARING.

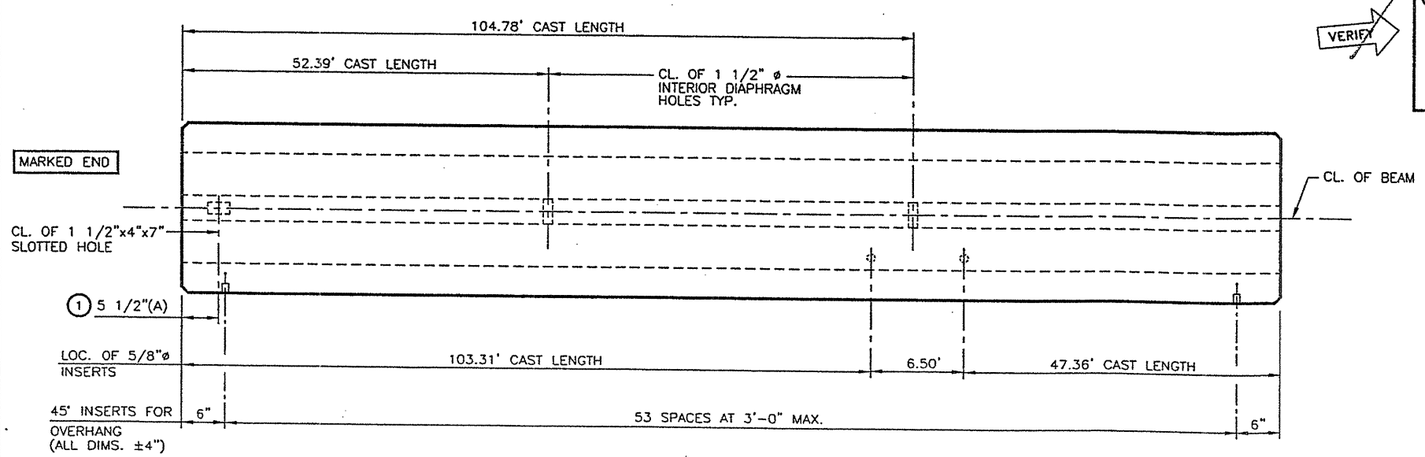

BEAM PLAN

TOTAL QUANTITY OF RICHMOND LF. 5/8" ø INSERTS, OR EQUAL, ON THIS SHEET = 2

TOTAL QUANTITY OF 45° INSERTS FOR OVERHANG, SUPPLIED BY CONTRACTOR, ON THIS SHEET = 54

BEAM TYPE = "VIM"
BEAM MARK = VIM-6
TOTAL BEAMS ON THIS SHEET = 1
TOTAL LINEAR FOOTAGE THIS SHEET = 157.09'

FABRICATOR: BEXAR CONCRETE WORKS I, LTD.

CONTRACTOR: SUMMIT CONTRACTING, INC.

SHOP PLANS WERE PREPARED BY: BEXAR CONCRETE WORKS I, LTD.

☐ NO EXCEPTIONS
☑ EXCEPTIONS AS NOTED
☐ REJECTED - RESUBMIT

KBR

Reviewed as to general compliance with the Contract Documents. This review does not relieve the Contractor/Supplier of his responsibility for adequacy of design correctness of dimensions, and accuracy of detail.

By T. Shanks Date: 7-23-04

STATE DISTRICT	FEDERAL REGION	STATE	FEDERAL AID PROJECT NO.			
LAREDO	6	TEXAS	NH-2002 (79)			
COUNTY			CONTROL	SECTION	JOB	HIGHWAY
WEBB			0018	05	062,ETC.	IH 35
JOB. NO.	DRAWN BY	CHECKED BY	DATE OUT	SHEET NO.		
2509	MJR	JDH	07-02-04	VIM-6		

FABRICATION SHEET

2509VIM6.DWG

SHEET NO. 670 WW

ELASTOMERIC BEARING FABRICATION TABLE

PAD MARK	QUANTITY PER SUBMITTAL SUB. 1	QUANTITY PER SUBMITTAL FINAL SUB. 2	DETAIL NO. FOR PAD	"BRG. TYPE" MARK	DUROMETER	THICKNESS LEFT & RIGHT "X" LOW SIDE	THICKNESS LEFT & RIGHT "Y" HIGH SIDE	OVERALL DIMENSIONS "L" LENGTH	OVERALL DIMENSIONS "W" WIDTH	CLIPPED DIMENSIONS "A"	CLIPPED DIMENSIONS "B"	CLIPPED DIMENSIONS "C"	CLIPPED DIMENSIONS "D"	ANCHOR HOLE DIMENSIONS "E"	ANCHOR HOLE DIMENSIONS "F"
C-1	24	--	DET-1	C-1	50	2 1/2"	2 1/2"	19"	9"	---	---	---	---	---	---
IV-1	18	--	DET-1	IV-1	50	2 5/16"	2 11/16"	22"	9"	---	---	---	---	---	---
IV-2	6	--	DET-1H	IV-7	50	2 5/16"	2 11/16"	22"	9"	---	---	---	---	4 1/2"	11"
IV-3	4	--	DET-1H	IV-7	50	2 3/8"	2 5/8"	22"	9"	---	---	---	---	4 1/2"	11"
IV-4	20	--	DET-1	IV-7	50	2 3/8"	2 5/8"	22"	9"	---	---	---	---	---	---
IV-5	18	--	DET-1	IV-7	50	2 7/16"	2 9/16"	22"	9"	---	---	---	---	---	---
IV-6	6	--	DET-1H	IV-7	50	2 7/16"	2 9/16"	22"	9"	---	---	---	---	4 1/2"	11"
IV-7	6	--	DET-1H	IV-7	50	2 1/2"	2 1/2"	22"	9"	---	---	---	---	4 1/2"	11"
IV-8	32	--	DET-1	IV-7	50	2 1/2"	2 1/2"	22"	9"	---	---	---	---	---	---
IV-9	2	--	DET-4	IV-10	50	2 1/2"	2 1/2"	---	15"	---	---	---	---	---	---
VIM-1	--	2	DET-1H	VI-1	50	2 7/16"	2 9/16"	22"	9"	---	---	---	---	4 1/2"	11"
VIM-2	--	20	DET-1	VI-1	50	2 7/16"	2 9/16"	22"	9"	---	---	---	---	---	---
VIM-3	--	2	DET-1H	VI-1	50	2 1/2"	2 1/2"	22"	9"	---	---	---	---	4 1/2"	11"
VIM-4	--	18	DET-1	VI-1	50	2 1/2"	2 1/2"	22"	9"	---	---	---	---	---	---

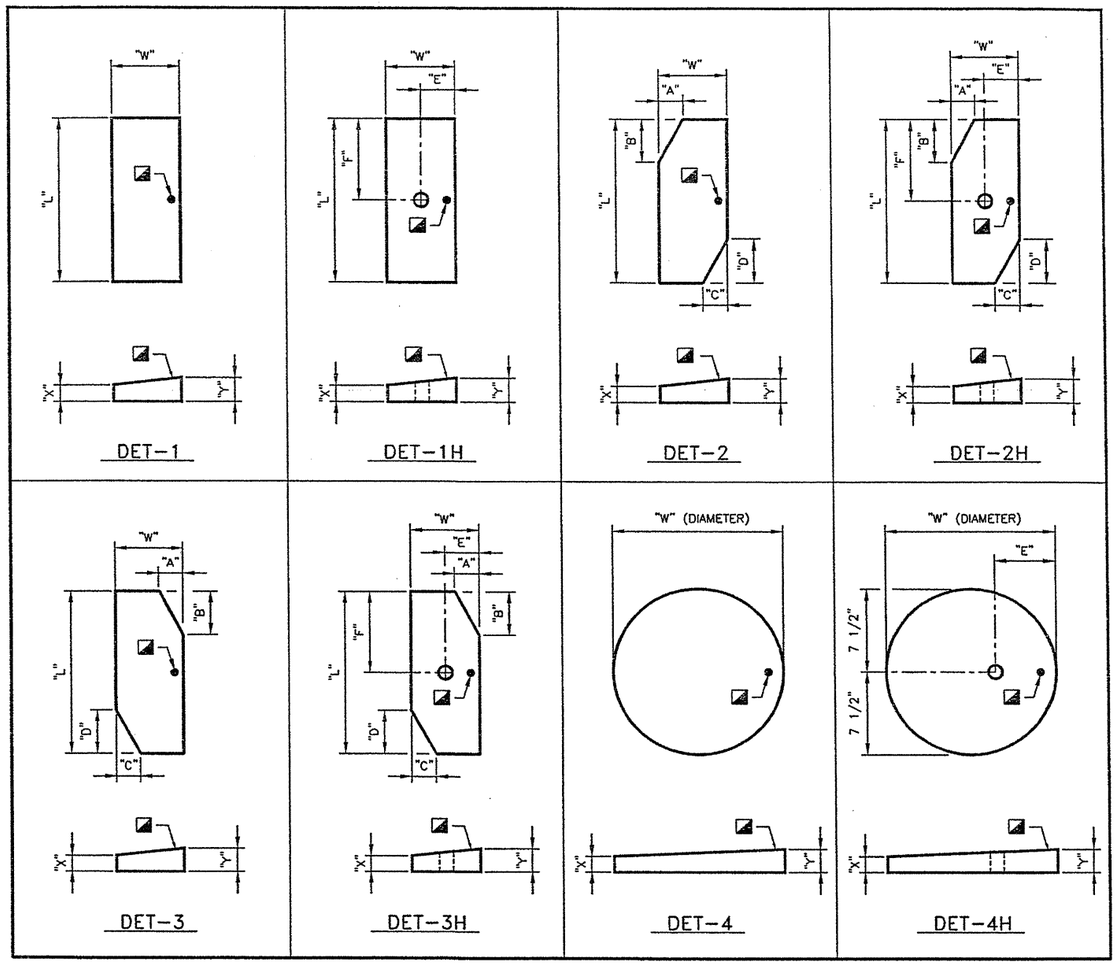

☑ NO EXCEPTIONS
☐ EXCEPTIONS AS NOTED
☐ REJECTED - RESUBMIT
KBR
Reviewed as to general compliance with the Contract Documents. This review does not relieve the Contractor/Supplier of his responsibility for adequacy of design correctness of dimensions, and accuracy of detail.
By T. Shanks Date: 7-23-04

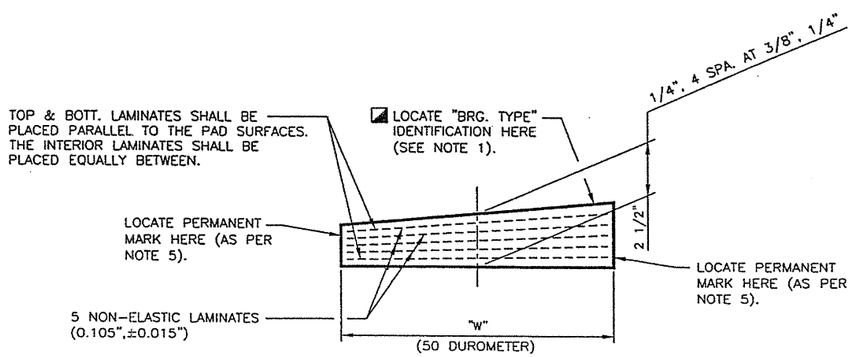

ELEVATION
LAMINATED BEARING

NOTES:

1) ◪ DENOTES HIGH SLOPE SIDE OF PAD TO HAVE ERECTION MARK AND "BRG. TYPE" IDENTIFICATION LOCATED.
2) ● DENOTES PAD ERECTION MARK.
3) ○ DENOTES 2" ROUND HOLE.
4) THE USE OF POLYISOPRENE (NATURAL RUBBER), FOR PAD MANUFACTURING, SHALL NOT BE PERMITTED.
5) PERMANENT PAD MARK PROVIDED AS PER TxDOT "TEXAS STANDARD SPECIFICATIONS" ITEM 435.2.1.d.
6) PADS ON THIS COPY ARE FOR FINAL SUBMITTAL NO. 2. PLEASE CHECK PADS FOR THIS SUBMITTAL ONLY.

2509BP1.DWG

FABRICATOR: BEXAR CONCRETE WORKS I, LTD.

CONTRACTOR: SUMMIT CONTRACTING, INC.

SHOP PLANS WERE PREPARED BY: BEXAR CONCRETE WORKS I, LTD.

STATE DISTRICT	FEDERAL REGION	STATE	FEDERAL AID PROJECT NO.
LAREDO	6	TEXAS	NH-2002 (79)

COUNTY	CONTROL	SECTION	JOB	HIGHWAY
WEBB	0018	05	062,ETC.	IH 35

JOB. NO.	DRAWN BY	CHECKED BY	DATE OUT	SHEET NO.
2509	MJR	JDH	07-02-04	BP-1

BEARING PAD SHEET

SHEET NO. 670 XX

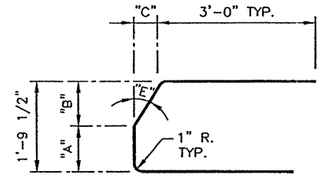

W10A – W10AG BARS
(#5)

BAR MARK NO.	"A"	"B"	"C"	SKEW ANGLE "E"
W10A	10 3/4"	10 3/4"	1/2"	2.50°
W10B	10 5/8"	10 7/8"	1"	5.00°
W10C	10 5/8"	10 7/8"	1 3/8"	7.50°
W10E	10 5/8"	10 7/8"	1 7/8"	10.00°
W10F	10 5/8"	10 7/8"	2 3/8"	12.50°
W10G	10 1/2"	11"	2 7/8"	15.00°
W10H	10 1/2"	11"	3 1/2"	17.50°
W10J	10 1/2"	11"	4"	20.00°
W10K	10 1/2"	11"	4 5/8"	22.50°
W10L	10 3/8"	11 1/8"	5 1/8"	25.00°
W10M	10 3/8"	11 1/8"	5 3/4"	27.50°
W10N	10 3/8"	11 1/8"	6 1/2"	30.00°
W10P	10 3/8"	11 1/8"	7 1/8"	32.50°
W10R	10 1/4"	11 1/4"	7 7/8"	35.00°
W10S	10 1/4"	11 1/4"	8 5/8"	37.50°
W10T	10 1/4"	11 1/4"	9 1/2"	40.00°
W10W	10 1/8"	11 3/8"	10 3/8"	42.50°
W10X	10 1/8"	11 3/8"	11 3/8"	45.00°
W10Y	10 1/8"	11 3/8"	1'-0 1/2"	47.50°
W10Z	10"	11 1/2"	1'-1 5/8"	50.00°
W10AA	10"	11 1/2"	1'-3"	52.50°
W10AB	10"	11 1/2"	1'-4 1/2"	55.00°
W10AC	9 7/8"	11 5/8"	1'-6 1/8"	57.50°
W10AE	9 7/8"	11 5/8"	1'-8 1/8"	60.00°
W10AF	9 7/8"	11 5/8"	1'-10 3/8"	62.50°
W10AG	9 3/4"	11 3/4"	2'-1 1/8"	65.00°

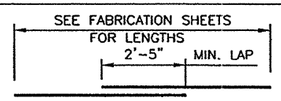

U9 BARS
(#5)

SPLICES PERMITTED AT 40'-0" C-C MIN. BETWEEN SPLICES. NO PORTION OF BAR WILL BE LESS THAN 10'-0". BAR LENGTH DOESN'T INCLUDE SPLICE.

SEE FABRICATION SHEET
FOR LENGTHS

BAR MARK NO.	LENGTH
U 10A	6'-6"
U 10B	7'-6"
U 10C	9'-6"
U 10E	12'-6"
U 10F	15'-6"
U 10G	18'-6"

U10A – U10G BARS
(#5)

OPTIONAL BARS AT FABRICATOR'S OPTION ON BEAMS AROUND 60' OR SHORTER.

BAR MARK NO.	LENGTH
P9	10'-0"

P9 BARS
(#6)

① BEND BAR AS NEEDED AT SKEWED BEAM END.

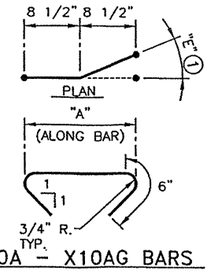

X10A – X10AG BARS
(#3)

BAR MARK NO.	"A" (ALONG BAR)	SKEW ANGLE "E"
X10A	1'-5"	2.50°
X10B	1'-5"	5.00°
X10C	1'-5 1/8"	7.50°
X10E	1'-5 1/8"	10.00°
X10F	1'-5 1/4"	12.50°
X10G	1'-5 1/4"	15.00°
X10H	1'-5 3/8"	17.50°
X10J	1'-5 1/2"	20.00°
X10K	1'-5 3/4"	22.50°
X10L	1'-5 7/8"	25.00°
X10M	1'-6 1/8"	27.50°
X10N	1'-6 3/8"	30.00°
X10P	1'-6 5/8"	32.50°
X10R	1'-6 7/8"	35.00°
X10S	1'-7 1/4"	37.50°
X10T	1'-7 5/8"	40.00°
X10W	1'-8"	42.50°
X10X	1'-8 1/2"	45.00°
X10Y	1'-9 1/8"	47.50°
X10Z	1'-9 3/4"	50.00°
X10AA	1'-10 1/2"	52.50°
X10AB	1'-11 3/8"	55.00°
X10AC	2'-0 3/8"	57.50°
X10AE	2'-1 1/2"	60.00°
X10AF	2'-2 7/8"	62.50°
X10AG	2'-4 5/8"	65.00°

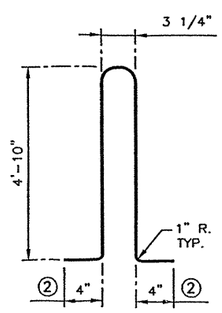

R9 BARS
(#4)

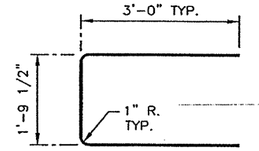

W9 BARS
(#5)

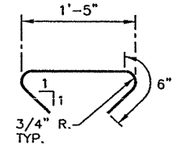

X9 BARS
(#3)

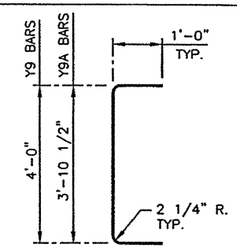

Y9 OR Y9A BARS
(#6)

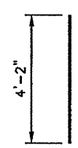

S9 BARS
(#7)

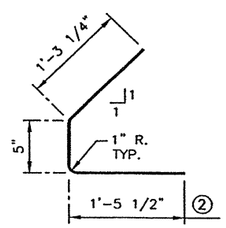

V9 BARS
(#4)

② BARS MAY BE CUT OR BENT AT SKEWED END AS REQUIRED.

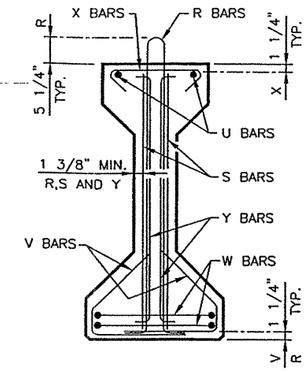

END SECTION

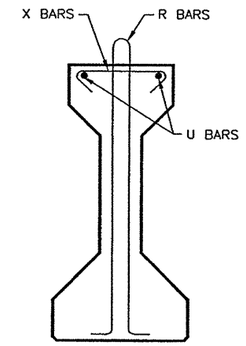

CL. SECTION

③ AT FABRICATOR'S OPTION ANCHOR HOLES MAY BE SUPPLIED ON ALL BEAMS. FOR ADDITIONAL NOTES ON ANCHOR HOLES SEE CONTRACT PLANS.

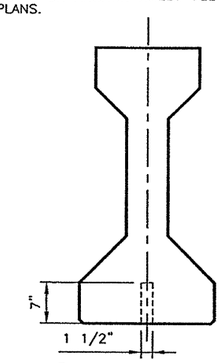

③ ANCHOR HOLE

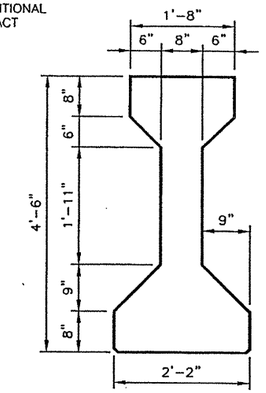

TYPE "IV" BEAM

BEAM SECTION PROPERTIES
APROXIMATE WEIGHT : 821.0 LBS/FT
APROXIMATE VOLUME : 0.203 CY/FT

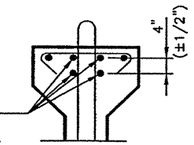

OPTIONAL P BARS, TOTAL 4 PER SIDE ~ #6 x 10'-0". BARS AT FABRICATOR'S OPTION ON BEAMS AROUND 60' OR SHORTER.

OPTIONAL REINFORCING

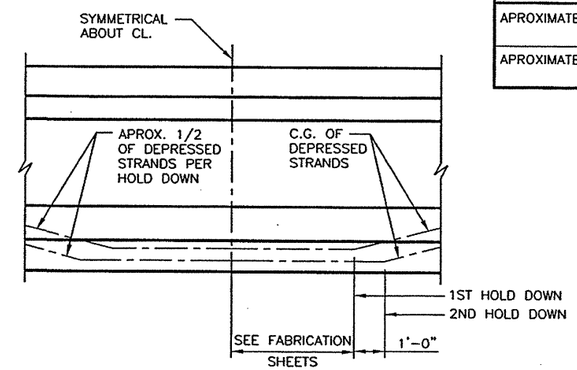

OPTIONAL HOLD DOWN POINT

AT FABRICATOR'S OPTION, OPTIONAL HOLD DOWN MAY BE USED IF UPLIFT EXCEEDS BED CAPACITY.

NOTES:

1) ALL REINFORCING STEEL SHALL BE ASTM A-615, GRADE 60.

2) ALL CONCRETE SHALL BE CLASS "H", SEE FABRICATION SHEETS FOR CONCRETE STRENGTH.

3) ALL DETAILS ON ATTACHED PLANS SHALL BE USED AS A GUIDELINE IN PLACING REINFORCING. ON SKEWED BEAMS, IN GENERAL, THE DISTANCE BETWEEN "R" AND/OR "S" BARS SHALL BE 2". THIS SPACING MAY VARY TO AVOID DOWEL HOLES OR END DIAPHRAGMS. AT SKEWED ENDS MAINTAIN REINFORCING AREA EQUIVALENT TO THAT OF SQUARE BEAMS.

4) ALL REINFORCING MAY BE TILTED OR BENT SLIGHTLY AS REQUIRED TO MAINTAIN MINIMUM CLEARANCES AS LONG AS MINIMUM STEEL REQUIREMENTS ARE MAINTAINED.

5) ALL UNANSWERED VERIFIES ARE CONSIDERED CORRECT.

6) STRANDS AND/OR REINFORCING BARS MAY BE SPREAD TO MISS OR COME IN CONTACT WITH MATERIALS USED TO FORM ANCHOR HOLES AND DIAPHRAGMS.

7) ALL DIMENSIONS PERTAINING TO STRANDS AND REINFORCING BARS WILL BE CENTER TO CENTER.

8) STRANDS AT BEAM ENDS SHALL BE CUT OFF AND TREATED AS SPECIFIED IN TxDOT'S "TEXAS STANDARD SPECIFICATIONS" ITEM 424.4.5.a.

9) ALL BEAMS SHALL HAVE A ROUGH FLOATED FINISH AS SPECIFIED IN TxDOT'S "TEXAS STANDARD SPECIFICATIONS" ITEM 424.4.5.a.

10) BOTTOM CORNERS OF ALL BEAM FLANGES AND OUTSIDE CORNERS OF EXTERIOR BEAM ENDS SHALL BE CHAMFERED 3/4" OR ROUNDED TO 1 1/2" RADIUS. AT FABRICATOR'S OPTION ALL VERTICAL EDGES MAY BE CHAMFERED.

11) ON BRIDGE, BEAMS TO BE PLACED AS MARKS ARE SHOWN ON ERECTION SHEETS. ON FABRICATION SHEETS, BEAMS ARE DETAILED WITH MARKS ON LEFT SIDE.

12) ALL DIMENSIONS MEASURED ALONG BOTTOM FLANGE CENTERLINE, UNLESS NOTED OTHERWISE.

STANDARDS FOR BOTH SUBMITTALS 1 AND 2

FABRICATOR:
BEXAR CONCRETE WORKS I, LTD.

CONTRACTOR:
SUMMIT CONTRACTING, INC.

SHOP PLANS WERE PREPARED BY:
BEXAR CONCRETE WORKS I, LTD.

STATE DISTRICT	FEDERAL REGION	STATE	FEDERAL AID PROJECT NO.			
LAREDO	6	TEXAS	NH-2002 (79)			
COUNTY			CONTROL	SECTION	JOB	HIGHWAY
WEBB			0018	05	062,ETC.	IH 35

JOB. NO.	DRAWN BY	CHECKED BY	DATE OUT	SHEET NO.
2509	MJR	JDH	02-20-04	S-"IV"

STANDARD BEAM DETAIL SHEET

2509SIV.DWG

SHEET NO. YY

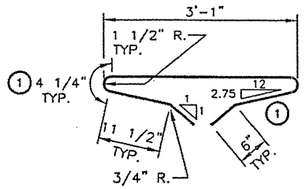

① X11 BARS
(#3)

① ENGINEER PLEASE NOTE ONE BAR DIMENSION AND ONE SLOPE OF X11 BAR HAS BEEN REVISED SO BAR FITS INTO BEAM.

VERIFY

② AT FABRICATOR'S OPTION, V11 BARS MAY BE ONE CONTINUOUS BAR, NO SPLICE. QUANTITIES PROVIDED FOR V11 BARS ARE FOR ONE COMPLETE BAR WITH SPLICE, AS DETAILED.

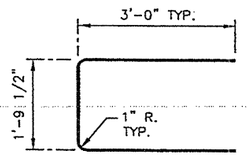

W11 BARS
(#5)

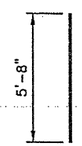

S11 BARS
(#5) 1

VERIFY BAR SIZE

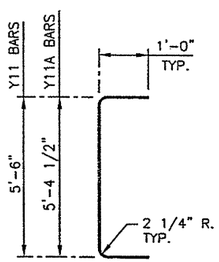

Y11 OR Y11A BARS
(#6)

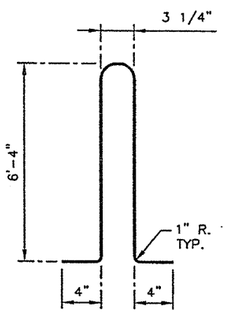

R11 BARS
(#4)

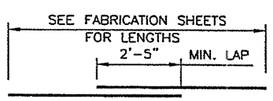

U11 BARS
(#5)

SPLICES PERMITTED AT 40'-0" C-C MIN. BETWEEN SPLICES. NO PORTION OF BAR WILL BE LESS THAN 10'-0". BAR LENGTH DOESN'T INCLUDE SPLICE.

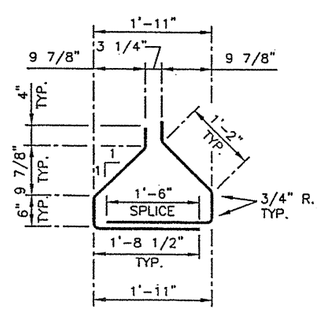

② V11 BARS
(#3)
(ONE COMPLETE BAR SHOWN)

SEE FABRICATION SHEET FOR LENGTHS

BAR MARK NO.	LENGTH
U12A	6'-6"

U12A BARS
(#5)

NOTES:

1) ALL REINFORCING STEEL SHALL BE ASTM A-615, GRADE 60.

2) ALL CONCRETE SHALL BE CLASS "H", SEE FABRICATION SHEETS FOR CONCRETE STRENGTH.

3) ALL DETAILS ON ATTACHED PLANS SHALL BE USED AS A GUIDELINE IN PLACING REINFORCING. ON SKEWED BEAMS, IN GENERAL, THE DISTANCE BETWEEN "R" AND/OR "S" BARS SHALL BE 2". THIS SPACING MAY VARY TO AVOID DOWEL HOLES OR END DIAPHRAGMS. AT SKEWED ENDS MAINTAIN REINFORCING AREA EQUIVALENT TO THAT OF SQUARE BEAMS.

4) ALL REINFORCING MAY BE TILTED OR BENT SLIGHTLY AS REQUIRED TO MAINTAIN MINIMUM CLEARANCES AS LONG AS MINIMUM STEEL REQUIREMENTS ARE MAINTAINED.

5) ALL UNANSWERED VERIFIES ARE CONSIDERED CORRECT.

6) STRANDS AND/OR REINFORCING BARS MAY BE SPREAD TO MISS OR COME IN CONTACT WITH MATERIALS USED TO FORM ANCHOR HOLES AND DIAPHRAGMS.

7) ALL DIMENSIONS PERTAINING TO STRANDS AND REINFORCING BARS WILL BE CENTER TO CENTER.

8) STRANDS AT BEAM ENDS SHALL BE CUT OFF AND TREATED AS SPECIFIED IN TxDOT'S "TEXAS STANDARD SPECIFICATIONS" ITEM 424.4.5.a.

9) ALL BEAMS SHALL HAVE A ROUGH FLOATED FINISH AS SPECIFIED IN TxDOT'S "TEXAS STANDARD SPECIFICATIONS" ITEM 424.4.5.a.

10) BOTTOM CORNERS OF ALL BEAM FLANGES AND OUTSIDE CORNERS OF EXTERIOR BEAM ENDS SHALL BE CHAMFERED 3/4" OR ROUNDED TO 1 1/2" RADIUS. AT FABRICATOR'S OPTION ALL VERTICAL EDGES MAY BE CHAMFERED.

11) ON BRIDGE, BEAMS TO BE PLACED AS MARKS ARE SHOWN ON ERECTION SHEETS. ON FABRICATION SHEETS, BEAMS ARE DETAILED WITH MARKS ON LEFT SIDE.

12) ALL DIMENSIONS MEASURED ALONG BOTTOM FLANGE CENTERLINE, UNLESS NOTED OTHERWISE.

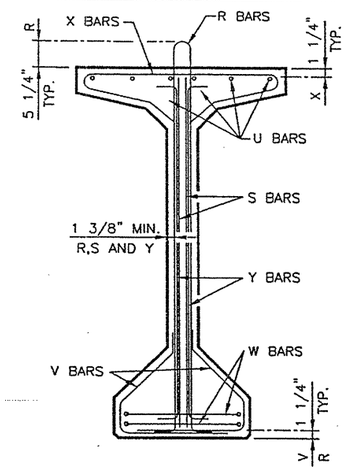

END SECTION

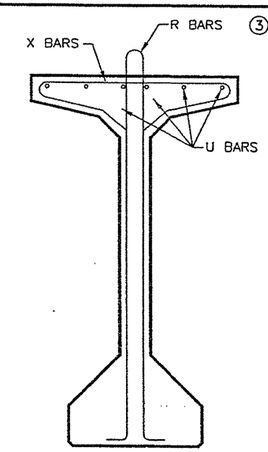

CL. SECTION

③ AT FABRICATOR'S OPTION ANCHOR HOLES MAY BE SUPPLIED ON ALL BEAMS.

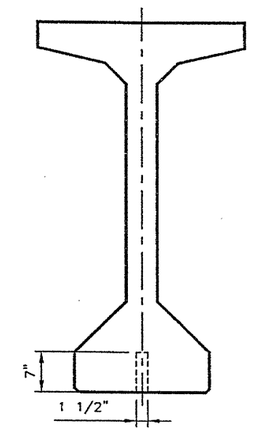

③ ANCHOR HOLE

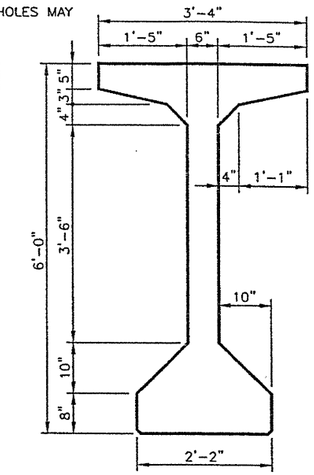

TYPE "VIM" BEAM

BEAM SECTION PROPERTIES
APROXIMATE WEIGHT : 980.0 LBS/FT
APROXIMATE VOLUME : 0.242 CY/FT

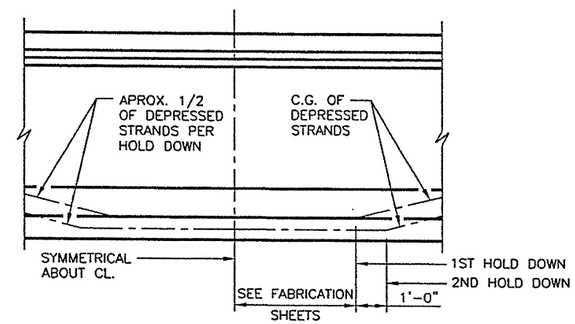

OPTIONAL HOLD DOWN POINT

AT FABRICATOR'S OPTION, OPTIONAL HOLD DOWN MAY BE USED IF UPLIFT EXCEEDS BED CAPACITY.

☐ NO EXCEPTIONS
☑ EXCEPTIONS AS NOTED
☐ REJECTED - RESUBMIT

KBR

Reviewed as to general compliance with the Contract Documents. This review does not relieve the Contractor/Supplier of his responsibility for adequacy of design correctness of dimensions, and accuracy of detail.

By T. Shaw KB Date 7-23-04

STANDARD FOR FINAL SUBMITTAL 2

FABRICATOR: BEXAR CONCRETE WORKS I, LTD.

CONTRACTOR: SUMMIT CONTRACTING, INC.

SHOP PLANS WERE PREPARED BY: BEXAR CONCRETE WORKS I, LTD.

STATE DISTRICT	FEDERAL REGION	STATE	FEDERAL AID PROJECT NO.			
LAREDO	6	TEXAS	NH-2002 (79)			
COUNTY			CONTROL	SECTION	JOB	HIGHWAY
WEBB			0018	05	062,ETC.	IH 35

JOB. NO.	DRAWN BY	CHECKED BY	DATE OUT	SHEET NO.
2509	MJR	JDH	07-02-04	S-"VIM"

STANDARD BEAM DETAIL SHEET

2509SIV.DWG

SHEET NO. 670 22

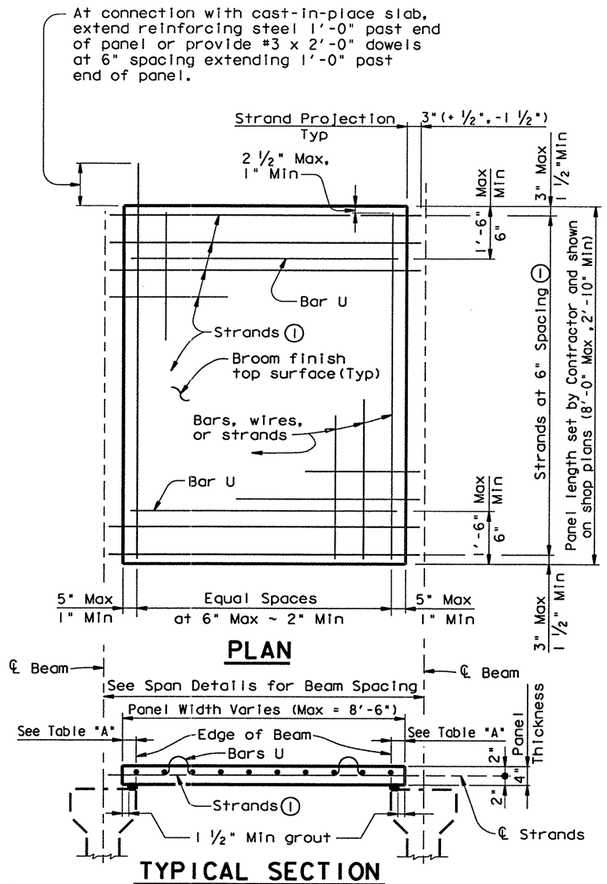

(1) Reinforcing steel #4 (Gr 60) at 6" spacing ~~may be~~ substituted for strands in panels 5'-0" in width or less and ~~shall be~~ required in panels 3'-6" in width or less.

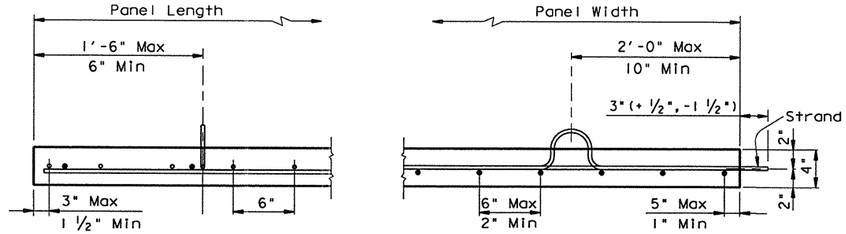

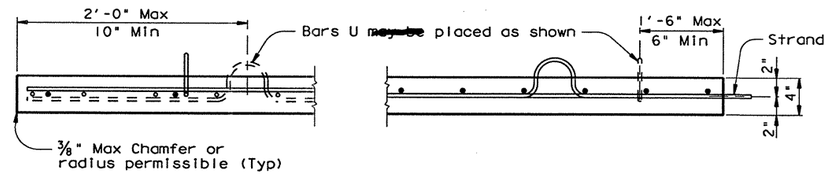

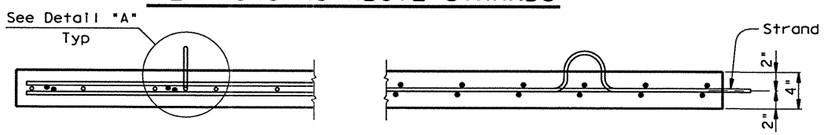

Reinforcing steel ~~may be~~ deformed reinforcing bars, welded wire fabric or welded deformed bar mats. Minimum area of reinforcing perpendicular to strands ~~shall be~~ 0.22 sq inches per foot. Prestressing strands may also be used, spaced at 6" for 1/2" strands and 4 1/2" for 3/8" strands. Individual bars or wires ~~shall be~~ no larger than #3. Reinforcing parallel to strands ~~shall be~~ as required to ensure proper handling of the fabric or bar mat. A reasonable amount of form oil will be permitted on welded fabric or bar mats.

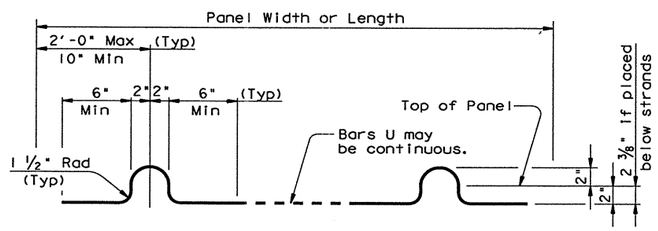

BARS U (#3)
Note: Four loops required per panel.

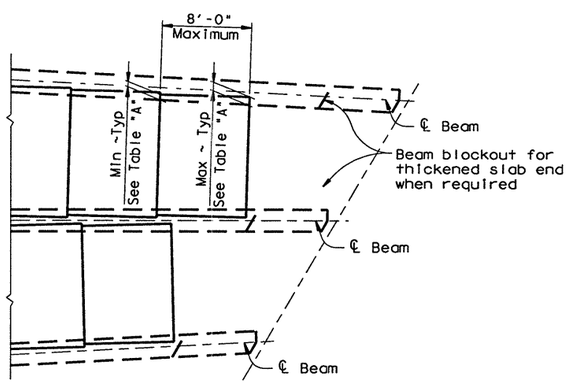

FLARED BEAM SPANS

PART PLAN
(Showing thickened slab end condition)

TABLE "A"			
Beam Type	Normal (In.)	Min (In.)	Max (In.)
A	3	2 1/2	3 1/2
B	3	2 1/2	3 1/2
C	3 1/2	2 1/2	4
54	4	3	5
IV	5 1/2	3 1/2	7
72	5 1/2	3 1/2	8

Normal dimensions ~~shall be~~ used on spans with parallel beams. Maximum and Minimum dimensions ~~shall~~ apply only to spans with flared beams.

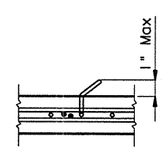

For Panels used with Epoxy Coated slab reinforcing, the loops of Bars U ~~shall be~~ field bent as shown. Bars U may be field bent to clear slab reinforcing.

DETAIL "A"

PRESTRESSED PANEL DETAILS

GENERAL NOTES:

Designed for HS25 Loading in accordance with AASHTO 1992 Standard and Interim Specifications.

See Span Details for possible restrictions on the use of Prestressed Concrete Panels.

All concrete for panels ~~to be~~ Class H. Release strength f'ci=4000 psi. Minimum 28 day strength f'c=5000 psi.

Prestressing strands ~~to be~~ 3/8" Dia (270k) with an initial tension of 16.1 kips per strand. Larger strands may be used with the same spacing and initial tension.

Suitable holes or anchorage devices for lifting panels ~~may be~~ cast in the panels provided they are shown on the shop plans and approved by the Engineer.

Erected panels ~~shall~~ bear uniformly on bedding strips of fiberboard or expanded polystyrene placed along the outer edge of each beam. A 1/4" gap ~~shall be~~ left at 4'-0" intervals to permit escape of trapped air in the cast-in-place concrete. If additional blocking is needed, special grading details for supporting the panels and extra reinforcing between beam and slab ~~will be~~ required. The cost of this additional blocking ~~will be~~ considered subsidiary to deck construction.

Care must be taken to ensure proper cleaning of construction debris and consolidation of concrete mortar under the edges of the panels. It is also important that the bedding strips be placed at the edges of beams so that adequate space is provided for the mortar to flow a minimum of 1 1/2" under the panels as the slab concrete is placed. Roadway cross-slope reduces the opening required for proper entry of the mortar. Bedding strips varying in thickness across the beam are therefore required. To allow the proper amount of mortar to flow under the panel, the minimum opening ~~shall be~~ 1/4".

All reinforcing steel in the cast-in-place slab ~~shall be~~ Grade 60. See Table on Sheet 2 of 3 for size and spacing of reinforcement. Orientation of reinforcement (normal or skewed) ~~shall~~ match that shown on the Span Details.

If the top and/or bottom layer of reinforcing steel is shown on the Span Details ~~to be~~ epoxy coated, then the OT, OC, OA, & OM and/or OD, OB, & OE bars ~~shall be~~ epoxy coated.

Bar laps, where required, ~~shall be~~ as follows:

Uncoated ~ #4 = 1'-5"
~ #5 = 1'-9"
Epoxy Coated ~ #4 = 2'-1"
~ #5 = 2'-7"

Contractor Note: Details as shown on the PCP Standard sheet are ~~to be~~ used in conjunction with the Span Details and applicable Standard sheets.

DISCLAIMER:
The use of this standard is governed by the "Texas Engineering Practice Act". No warranty of any kind is made by TxDOT for any purpose whatsoever. TxDOT assumes no responsibility for the conversion of this standard to other formats or for incorrect results or damages resulting from its use.

LEVELS DISPLAYED
1 2 3 4 5 6 7 8 9 10 11 21 31 41 51 61
71 81 91 92 93 94 95 96 97 98 99 91 92
93 94 95 96 97 98 99 91 92 93 94 95 96
99 95 95 95 95 95 95 95 95 95 95 95 95
ACC:
(LV=1,2 for English)

HS25 LOADING — SHEET 1 OF 3

THE SEAL APPEARING ON THIS DOCUMENT WAS AUTHORIZED BY JAMES B. HORNSBY P.E. 81485, ON JUNE 02, 2003

MODIFIED FOR HS25 LOADING AND TO INCLUDE TY VI BEAMS (MOD)

Texas Department of Transportation
Design Division (Bridge)

PRESTRESSED CONCRETE PANELS
OPTIONAL DECK DETAILS FOR PRESTRESSED CONC BEAM SPANS

PCP(C) (MOD)

FILE: pcpestds.dgn	DN: TxDOT	CK: MSM	DW: JAG	CK: DWM	STD: B489
© TxDOT September 1998	DIST	FED REG	FEDERAL AID PROJECT		SHEET
REVISIONS	22	6	NH-2002 (79)		671
	COUNTY		CONTROL	SECT	JOB	HIGHWAY
	WEBB		0018	05	062, ETC	IH 35

6/4/2003

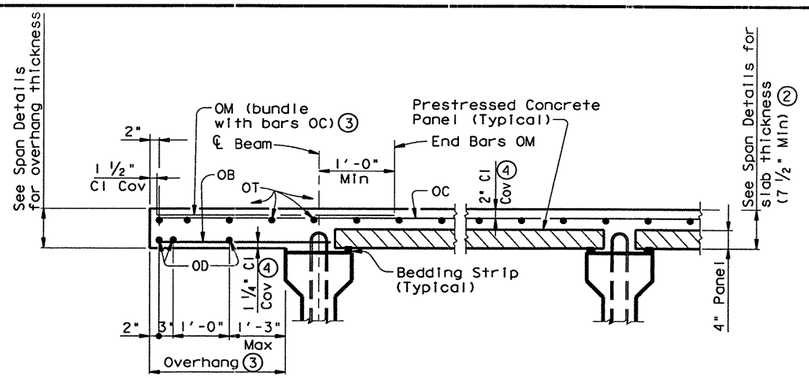

PART TRANSVERSE SECTION~TYPICAL

② The actual thickness constructed may exceed the slab thickness shown on Span Details but, at mid-span of beams the extra thickness ~~shall be~~ no more than 2". Bearing Seat Elevations or finished grade may be adjusted.

③ Bars OM required where slab overhang exceeds the following: 8 in slab ~ 3'-0"

④ Clear cover ~~shall be~~ as indicated unless otherwise shown on Span Details. Bars OT may rest on top of prestressed concrete panels if necessary to maintain clear cover.

TABLE OF REINFORCING STEEL		
BAR	SIZE	MAX SPA (in.)
OA	#5	~
OB	#4	18
OC	#5	5 1/2
OD	#5	9
OE	#5	5 1/2
OM	#4	~
OT	#4	9

Max Spa as listed unless otherwise shown.

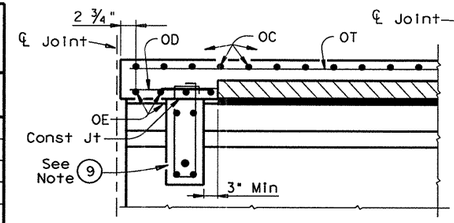

SECTION AT END DIAPHRAGM

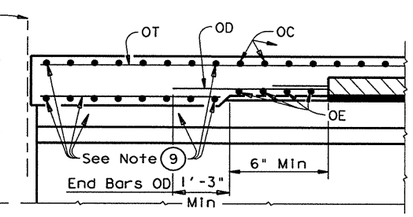

SECTION AT THICKENED SLAB ENDS

⑨ For size and spacing of reinforcing steel, see appropriate details elsewhere in plans.

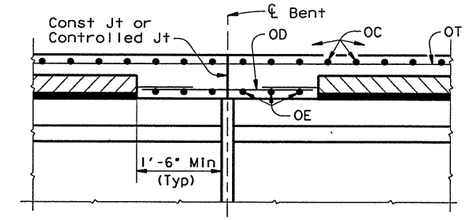

SECTION AT CONVENTIONAL INTERIOR BENT w/o DIAPHRAGM

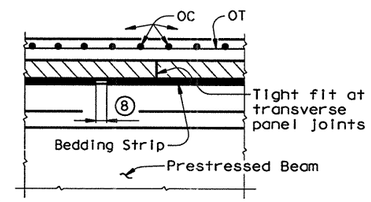

⑧ ¼" Open Joint in bedding strip at 4'-0"c/c ±. Place 6" long piece of bedding strip ¼" behind opening if necessary to reduce grout leakage.

SECTION AT TRANSVERSE PANEL JOINTS

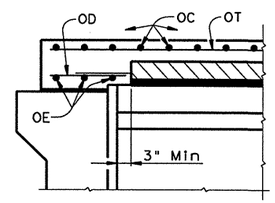

SECTION AT ABUTMENT WITH SLAB OVER BACKWALL

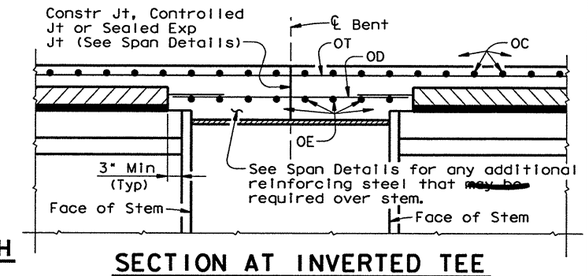

SECTION AT INVERTED TEE INTERIOR BENT

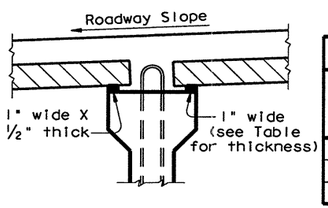

BEDDING STRIP THICKNESS (INCHES)				
	MAXIMUM ROADWAY SLOPE			
BEAM	.08'/ft	.06'/ft	.04'/ft	.02'/ft
A, B, C	1	¾	¾	¾
54	1	1	¾	¾
IV, 72	1 ¼	1	1	¾

NORMAL GRADING DETAIL

Minimum bedding strip dimensions ~~shall be~~ as shown above. To reduce the quantity of cast-in-place concrete, thickness shown may ~~may be~~ increased by ¼" increments to a maximum of 1 ½". Strips ~~may be~~ comprised of one layer or two, except that no layer ~~shall be~~ less than ½" thick. All layers of bedding strips ~~shall be~~ bonded to the beam and to each other with an approved adhesive. The same thickness strip ~~shall be~~ used under any one panel edge and the maximum change in thickness between adjacent panels ~~shall be~~ ¼". Panels ~~may be~~ supported by an alternate method, using a commercial product, if approved by the Engineer of Bridge Design, Design Division.

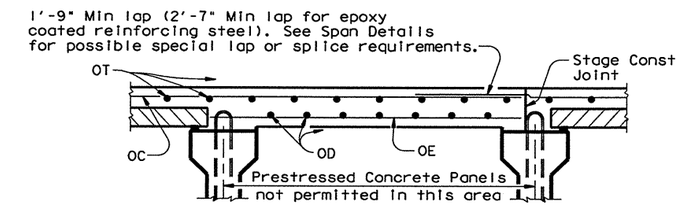

STAGE CONSTRUCTION

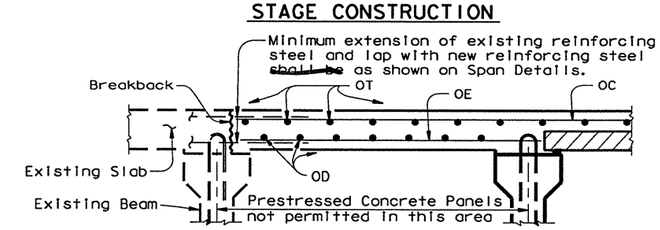

BRIDGE WIDENINGS

PART TRANSVERSE SECTIONS

Examples of potential situations where prestressed concrete panels ~~may not be~~ permitted. Refer to Span Details for limitations on their use.

HS25 LOADING — SHEET 2 OF 3

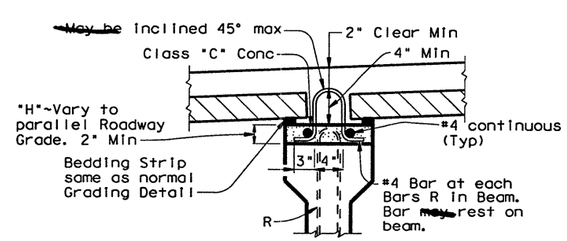

⑤ Concrete blocks used for special grading ~~shall be~~ any convenient plan dimension with a minimum of 2" x 4" and a maximum of 4" x 8". Heights ~~may be~~ from 1 ⅛" to 5 ½".

⑥ Concrete blocks from 1 ⅛" high to 2" high ~~may be~~ used without the additional R bar extensions or longitudinal No. 4 bars.

⑦ For blocks up to 3 ½" high, Use 1" x 6" 16 gage galvanized sheet metal angle and for blocks 3 ½" to 5 ½" high, use 1" x 8" 16 gage galvanized sheet metal angle. Tie sheet metal thru holes in angle at 12" centers with 14 gage minimum galvanized wire. Sheet metal angles are ~~to be~~ overlapped at splices and left in place. Vent holes ⅜" in diameter are ~~to be~~ placed in angles within the upper 1", spaced at 36" centers.

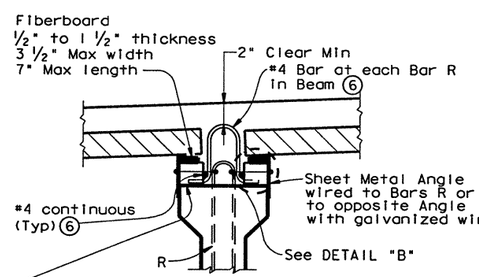

Place concrete blocks at ⑤ ¼ pts of panel edges (± 2" along beam). For panels 4 ft long and less the blocks ~~may be~~ at panel corners and common to two panels. Blocks not ~~to be~~ used with Types A and B beams. Expanded polystyrene ~~shall not be~~ used for panel bedding with concrete blocks.

SPECIAL GRADING DETAILS

For use where the distance between top of beam and finished grade can ~~not be~~ achieved within tolerances on cast-in-place slab thickness and thickness of bedding strips. Panels ~~may be~~ supported by an alternate method, using a commercial product, if approved by the Engineer of Bridge Design, Design Division.

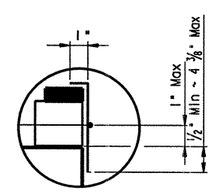

DETAIL "B"

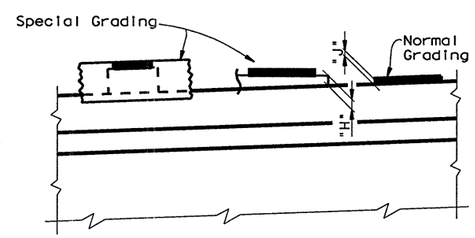

At grading method changes along the beam, the special grading "H" dimension may be reduced to 1 ¾" and the normal grading "J" dimension may be increased to 2". Some cross-slope conditions may require further H and J adjustments as directed by the Engineer.

STATE OF TEXAS — JAMES B. HORNSBY — 81485 — REGISTERED PROFESSIONAL ENGINEER

THE SEAL APPEARING ON THIS DOCUMENT WAS AUTHORIZED BY JAMES B. HORNSBY P.E. 81485, ON JUNE 02, 2003

MODIFIED FOR HS25 LOADING

Texas Department of Transportation
Design Division (Bridge)

PRESTRESSED CONCRETE PANELS
OPTIONAL DECK DETAILS FOR PRESTRESSED CONC BEAM SPANS

PCP (C) (MOD)

FILE: pcpestds.dgn	DN: TxDOT	CK: DWM	DW: RNP	CK: DWM	STD: B489
© TxDOT September 1998	DIST	FED REG	FEDERAL AID PROJECT		SHEET
REVISIONS	22	6	NH-2002 (79)		672
	COUNTY		CONTROL	SECT	JOB	HIGHWAY
	WEBB		0018	05	062, ETC	IH 35

DISCLAIMER: The use of this standard is governed by the "Texas Engineering Practice Act". No warranty of any kind is made by TxDOT for any purpose whatsoever. TxDOT assumes no responsibility for the conversion of this standard to other formats or for incorrect results or damages resulting from its use.

LEVELS DISPLAYED — ACC: (LV=1.2 for English)

6/4/2003 — HDWF11F023 \hcivil\cefd13\01 — b:dmmon03.dgn-03

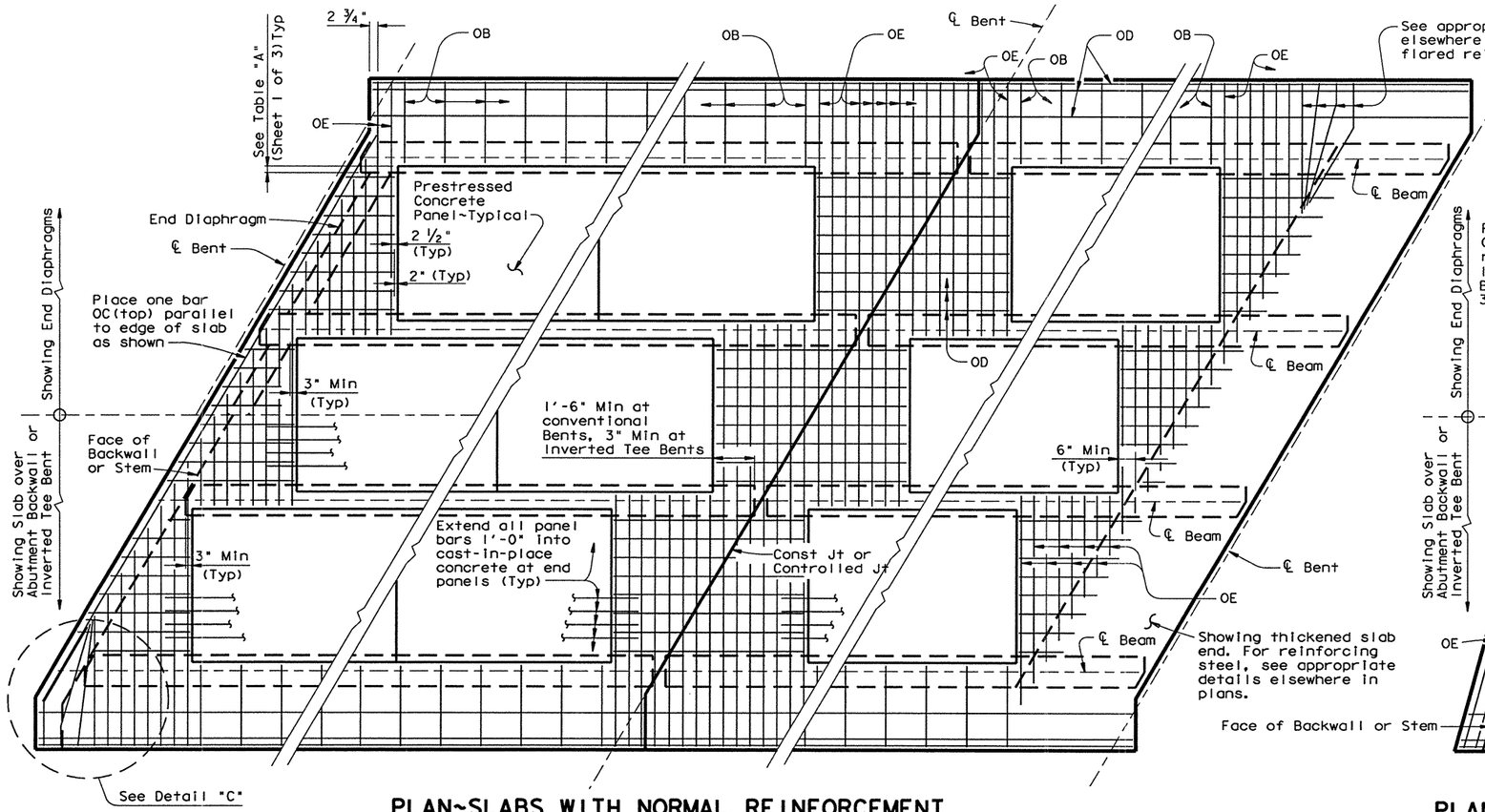

PLAN~SLABS WITH NORMAL REINFORCEMENT

(Showing bottom reinforcing steel. For top reinforcement see Transverse Sections on Sheet 2 of 3 and Detail "A".)

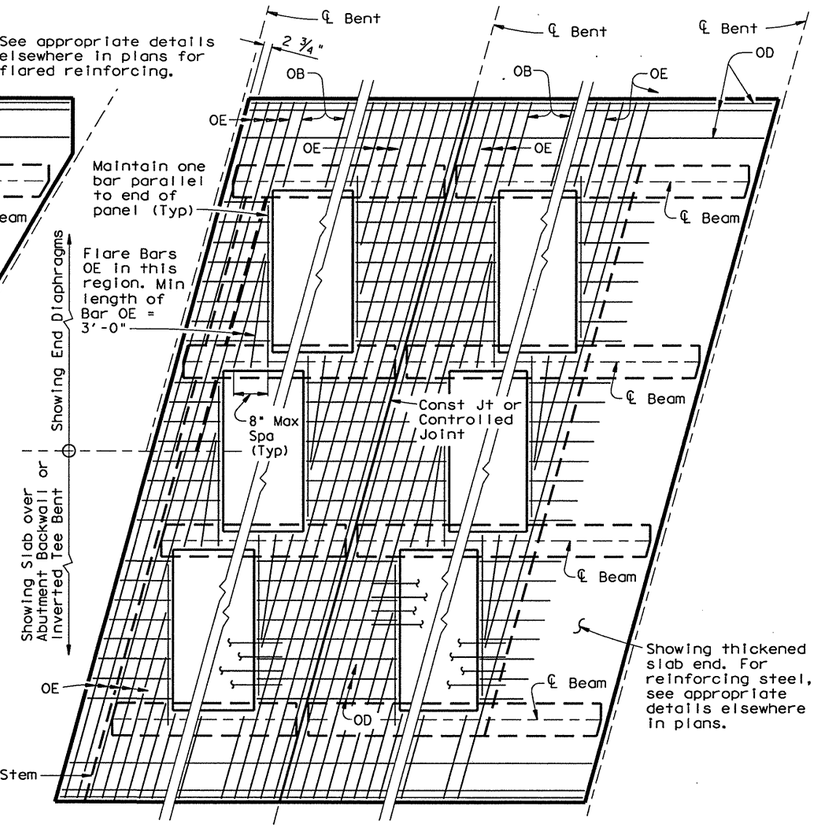

PLAN~SLABS WITH SKEWED REINFORCEMENT

(Showing bottom reinforcing steel. For top reinforcement see Transverse Sections on Sheet 2 of 3.)

APPROXIMATE QUANTITIES FOR ONE SQUARE FOOT OF SLAB

(FOR CONTRACTOR'S INFORMATION ONLY)

Slab Thickness (in.)	Reinf Steel (Lb)	Class S Concrete (CY)
7 ¼	3.17	0.0100
7 ½	3.17	0.0108
7 ¾	3.17	0.0116
8	3.17	0.0123
8 ¼	3.17	0.0131

These approximate quantities are for a typical square foot of cast-in-place slab over the PCP. They do not include an allowance for slab overhangs, thickened ends or diaframs, or the portion between panels over the beams.

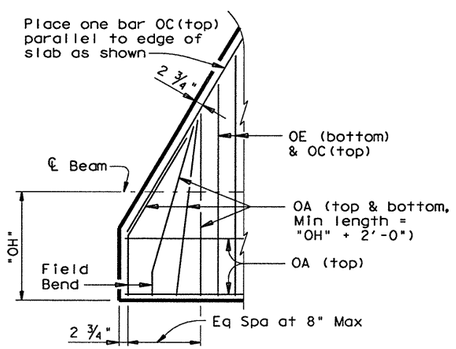

DETAIL "C"

DISCLAIMER: The use of this standard is governed by the "Texas Engineering Practice Act". No warranty of any kind is made by TxDOT for any purpose whatsoever. TxDOT assumes no responsibility for the conversion of this standard to other formats or for incorrect results or damages resulting from its use.

LEVELS DISPLAYED 1 2 3 4 5 6 7 8 9 10 11 12 13 14 15 16 17 18 19 20 21 22 23 24 25 26 27 28 29 30 31 32 33 34 35 36 37 38 39 40 41 42 43 44 45 46 47 48 49 50 51 52 53 54 55 56 57 58 59 60 61 62 63

ACC: (LV=1,2 for English)

STATE OF TEXAS — JAMES B. HORNSBY — 81485 — REGISTERED PROFESSIONAL ENGINEER

THE SEAL APPEARING ON THIS DOCUMENT WAS AUTHORIZED BY JAMES B. HORNSBY P.E. 81485, ON JUNE 02, 2003

MODIFIED FOR HS25 LOADING

HS25 LOADING — SHEET 3 OF 3

Texas Department of Transportation
Design Division (Bridge)

PRESTRESSED CONCRETE PANELS
OPTIONAL DECK DETAILS FOR PRESTRESSED CONC BEAM SPANS

PCP(C) (MOD)

FILE: pcpestde.dgn	DN: TxDOT	CK: DWM	DW: RNP	CK: DWM	STD: B489
©TxDOT September 1998	DIST	FED REG	FEDERAL AID PROJECT		SHEET
REVISIONS	22	6	NH-2002 (79)		673
	COUNTY		CONTROL	SECT	JOB	HIGHWAY
	WEBB		0018	05	062, ETC	IH 35

6/4/2003 H:\Pif\023 \hsl\pif01\01\ b:\dmnn04.dgn-03

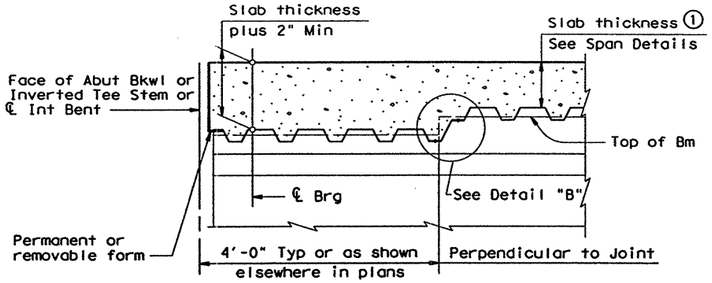

THICKENED SLAB END AT ABUTMENT OR INTERIOR BENT

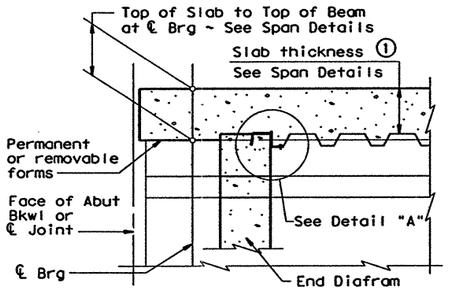

SLAB END WITH CONC END DIAF OPTION AT ABUTMENT OR INTERIOR BENT

① Slab thickness minus 5/8" if corrugations match reinforcing bars

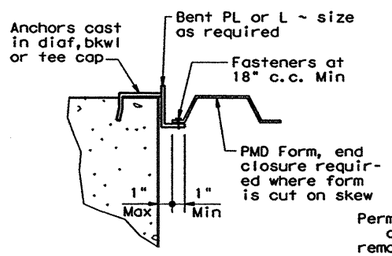

DETAIL "A"

DETAILS AT BEAM ENDS

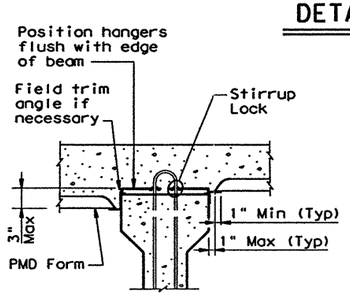

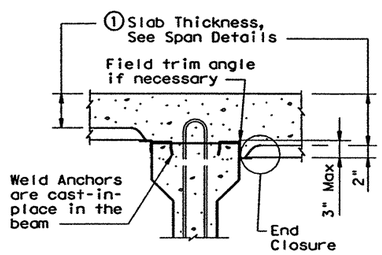

TYPICAL TRANSVERSE SECTIONS

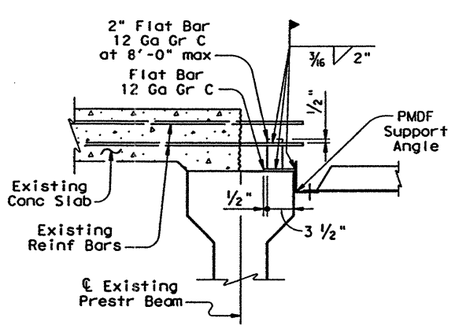

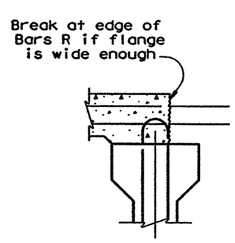

SECTION THRU BREAKBACK FOR WIDENING

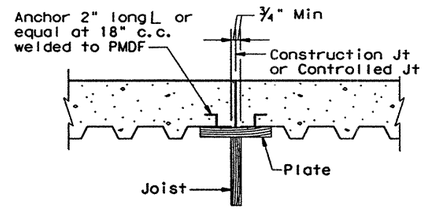

SECTION THRU CONSTRUCTION JOINT

Note: In spans where PMD forms are used, timber forms shall be used at construction joints.

Adequate provision ~~shall be~~ made to support edge of metal form and to provide anchorage of metal form to slab concrete where joined to wood forms.

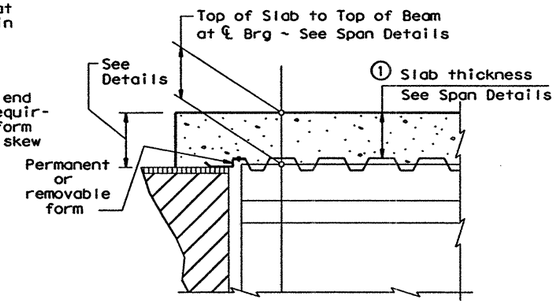

SECTION THRU SLAB OVER ABUTMENT BACKWALL OR INVERTED TEE STEM

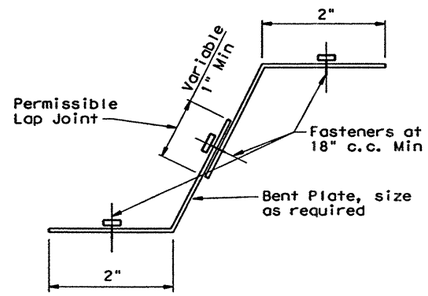

DETAIL "B"

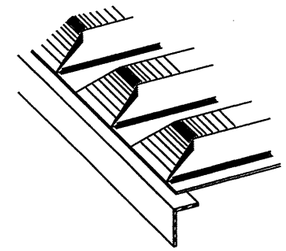

PRECLOSED

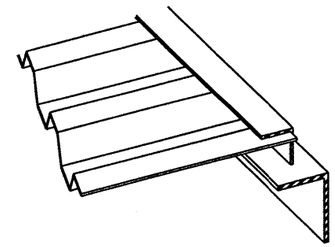

ANGLE HEADER

NOTE: This type is ~~to be~~ used for skewed ends only.

TYPES OF END CLOSURES

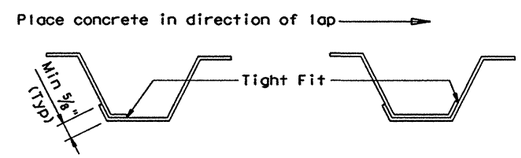

SIDE LAP DETAILS

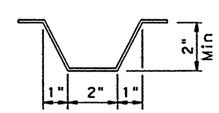

TYPICAL CORRUGATION

APPROXIMATE QUANTITIES FOR ONE SQUARE FOOT OF SLAB (for Contractors information only)

Slab Thickness inches	Reinf Steel Lb/SF	Class S Concrete CY/SF
7.25	6.66	0.0255
7.50	6.66	0.0262
7.75	6.66	0.0270
8.00	6.66	0.0278
8.25	6.66	0.0285

These approximate quantities are for a typical square foot of cast-in-place slab over the average PMDF with corrugations not matching bars. The quantities do not include an allowance for slab overhangs, thickened slab ends, or possible haunch over beams.

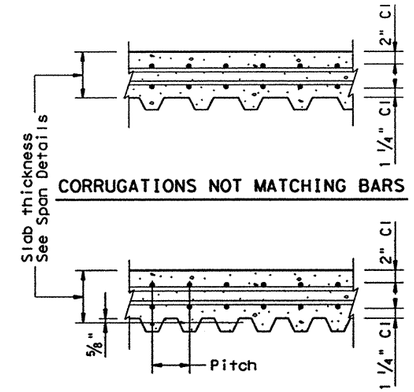

The Contractor has the option of furnishing either system, if practical.

TYPICAL LONGITUDINAL SLAB SECTIONS

GENERAL NOTES:

Permenant Metal Deck Forms (PMDF) ~~shall be~~ designed for the dead load of form, reinforcement and concrete plus 50 pounds per square foot for construction loads. The following allowable stresses ~~shall be~~ used in the design:

ASTM A653, Grade	Yield (psi)	Allowable Stress (psi)
33	33,000	23,900
37	37,000	26,800
40	40,000	29,000
50	50,000	36,000
80	80,000	36,000
Weld Metal		12,400

Maximum deflection under the weight of forms, reinforcement and concrete, or a minimum of 120 pounds per square foot ~~shall not~~ exceed 1/180 of the form span or 1/2 inch, whichever is less. The design span for forms ~~shall be~~ clear distance between beam flanges measured parallel to the form flutes minus 2 inches. The minimum thickness of the forms ~~shall be~~ 20 gage and that of the support angles ~~shall be~~ 14 gage. All forms ~~shall be~~ securely fastened to supports.

This Standard ~~shall be~~ used as a guide in the preparation of shop detail drawings.

Texas Department of Transportation
Design Division (Bridge)

PERMANENT METAL DECK FORMS (CONCRETE)

PMDF (C)

FILE: ~~pmfcotde.dgn~~	DN: THD	CK: THD	DW: LW	CK: LDS	STD: B488
©TxDOT September 1998	DIST	FED REG	FEDERAL AID PROJECT		SHEET
REVISIONS	22	6	NH-2002 (79)		674
	COUNTY		CONTROL	SECT	JOB	HIGHWAY
	WEBB		0018	05	062, ETC	IH 35

DISCLAIMER:
The use of this standard is governed by the "Texas Engineering Practice Act". No warranty of any kind is made by TxDOT for any purpose whatsoever. TxDOT assumes no responsibility for the conversion of this standard to other formats or for incorrect results or damages resulting from its use.

LEVELS USED: 1 2 4 5 6 7 8 9 10 11 12 31 41 51 61 ACC: 17 18 19 20 21 22 23 24 25 26 27 28 29 30 31 32 33 34 35 36 37 38 39 40 41 42 43 44 45 46 47 48 49 50 51 52 53 54 55 56 57 58 59 60 61 62 63 (LV=1,2 for English)

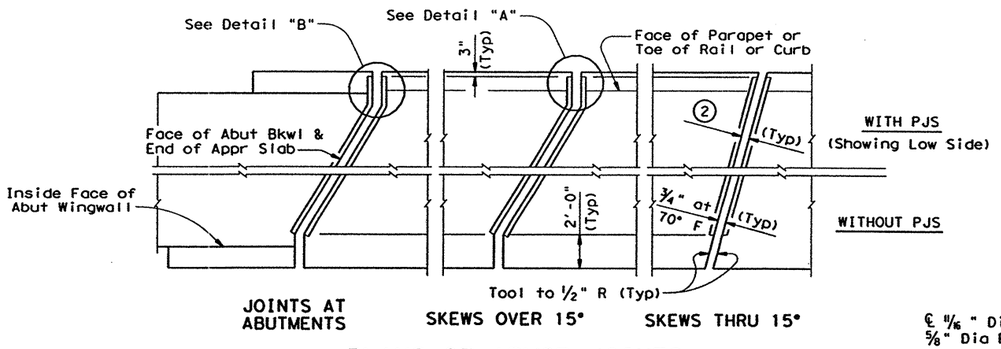

PLANS OF ARMOR JOINTS

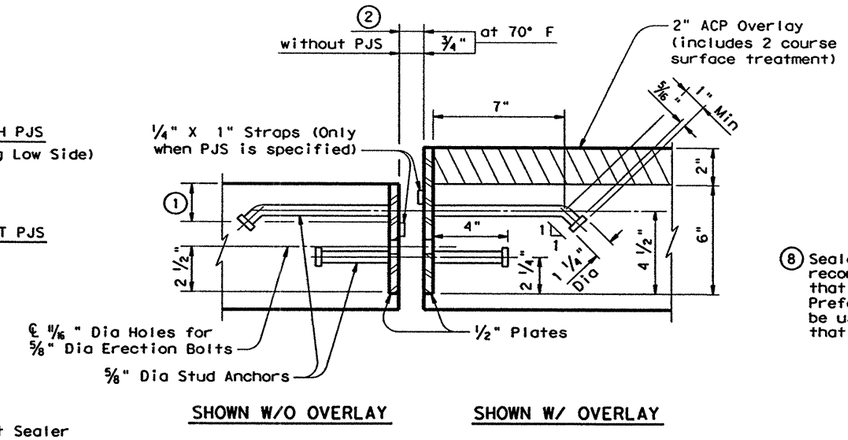

SECTION THRU ARMOR JOINT

WEIGHTS P.L.F. FOR ONE ARMOR JOINT (2 PLATES)		
WITHOUT OVERLAY	WITHOUT PJS	22.90 Lb
	WITH PJS (8)	23.76 Lb
WITH 2" OVERLAY (7)	WITHOUT PJS	29.70 Lb
	WITH PJS (8)	30.56 Lb

(7) Adjust values by 1.70 Lbs for each 1/2" variation from the 2" thickness.

(8) Sealed Expansion Joints (SEJ) are recommended for new structures that require joints to be sealed. Preformed Joint Sealer (PJS) may be used on structures with PJS that are being widened.

TABLE OF PJS SIZES (8)	
Joint Opening	PJS Size
1 1/4"	2"
1 1/2"	2 1/2"
1 3/4"	3"
2"	3 1/2"
2 1/2"	4"

(1) Varies ~ Actual depth of Joint Sealer plus 1".

(2) See table for Joint opening with PJS.

(3) The bottom portion of the seal may be cut or portions removed to facilitate vertical bending only. Any authorized cutting shall be to smooth lines and round curves.

(4) If PJS is to be used, extend End of Parapet, Barrier Rail or Curb 1/4" into Jt Opening (each side of ℄ Joint).

(5) Form 1/4" recess in Parapet, Barrier Rail or Curb to receive PJS.

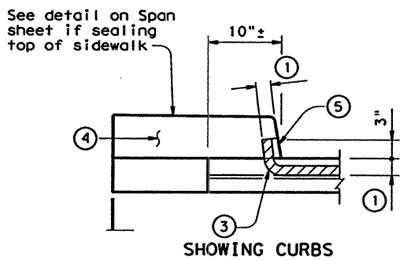

SHOWING CURBS

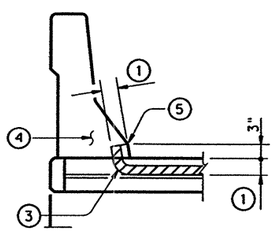

SHOWING BARRIER RAILS

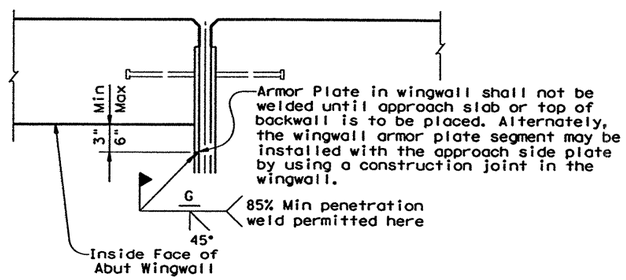

DETAIL "B"

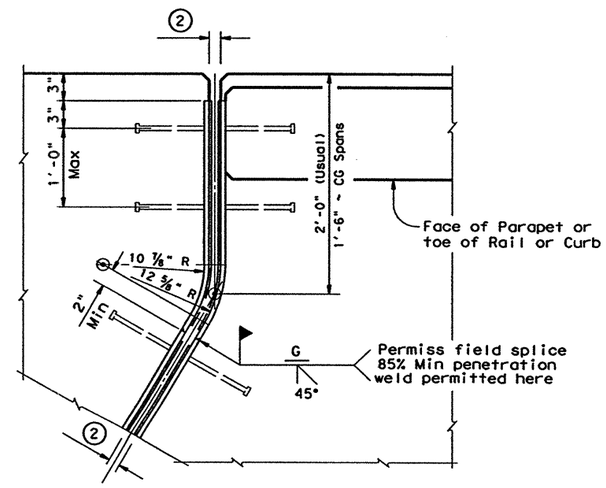

DETAIL "A"

GENERAL NOTES:

Armor Joints shall be provided at all locations shown on plans. Provision for preformed joint sealer shall be made when thus indicated on bridge layout "Armor Joint (PJS)" or otherwise noted in plans. (8)

Armor Plates shall be shipped in convenient lengths of 24'-0" max and 10'-0" min unless otherwise necessary for stage construction or widenings. One shop splice will be permitted in each shipping length provided no piece is less than 2'-0" in length and sufficient studs are added to limit the stud to shop splice distance to 2" Min and 4" Max.

Shop and field welded butt splices shall be made by groove welding. Areas in contact with preformed joint sealer shall be ground smooth. Field splice preparations shall be performed in the shop.

Stud anchors shall be electric arc end-welded to the plates with complete fusion. Erection holes shall be punched to line up in final position of Armor Joint. Corresponding plate sections shall be match marked and bolted together for shipment.

All steel parts are not to be painted or primed unless designated elsewhere on the plans.

The Contractor shall arrange for securing the Armor Joint in position, and placing to the proper grade and alignment by welding braces to adjacent reinforcing steel. Cost of temporary bracing is to be included in the price bid for Structural Steel Armor Joint.

After bracing and welding the armor plates, the erection bolts and spacers shall be removed before placing slab concrete.

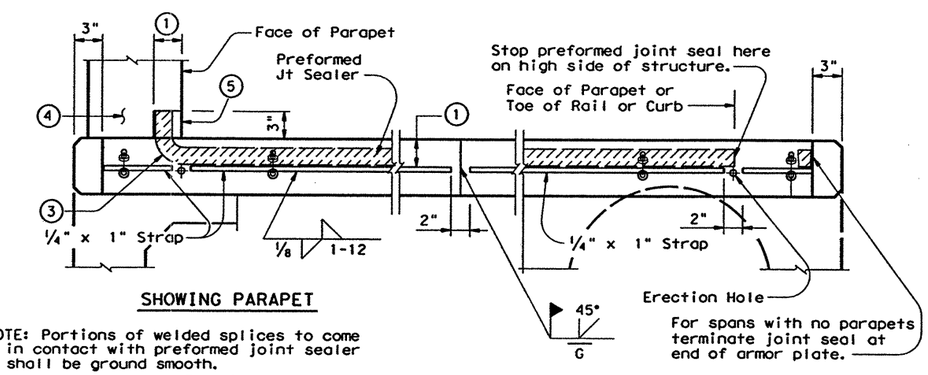

SHOWING PARAPET

NOTE: Portions of welded splices to come in contact with preformed joint sealer shall be ground smooth.

INSTALLATION OF PREFORMED JOINT SEALER

(Slab on Stringers, CG Spans or Box Beam Spans)

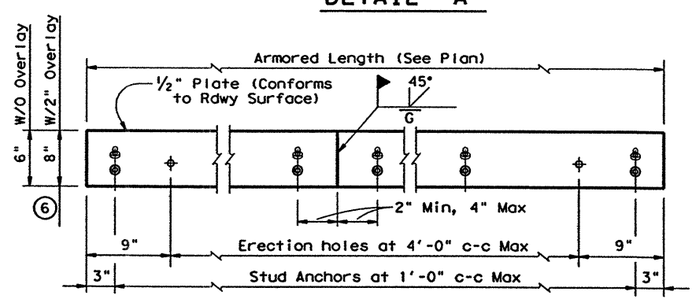

ELEVATION OF BASIC ARMOR PLATE

(6) Adjust 8" plate height for Overlay thicknesses other than 2" shown.

Texas Department of Transportation
Design Division (Bridge)

ARMOR JOINT DETAILS

AJ

FILE: ajstdet.dgn	DN: THD	CK: THD	DW: DRG	CK: LDS	STD: B14	
© TxDOT September 1998	DIST	FED REG	FEDERAL AID PROJECT			SHEET
REVISIONS	22	6	NH-2002 (79)			675
	COUNTY		CONTROL	SECT	JOB	HIGHWAY
	WEBB		0018	05	062, ETC	IH 35

DISCLAIMER: The use of this standard is governed by the "Texas Engineering Practice Act". No warranty of any kind is made by TxDOT for any purpose whatsoever. TxDOT assumes no responsibility for the conversion of this standard to other formats or for incorrect results or damages resulting from its use.

LEVELS 1 2 3 4 5 6 7 8 9 10 11 12 13 14 15 16 17 18 19 20 21 22 23 24 25 26 27 28 29 30 31 32 33 34 35 36 37 38 39 40 41 42 43 44 45 46 47 48 49 50 51 52 53 54 55 56 57 58 59 60 61 62 63

LAYER ACC: (LV=1,2 for English)

d34mop06.dgn-02 HOUFILE023 \hcivil\cf0130\ 4/18/2003

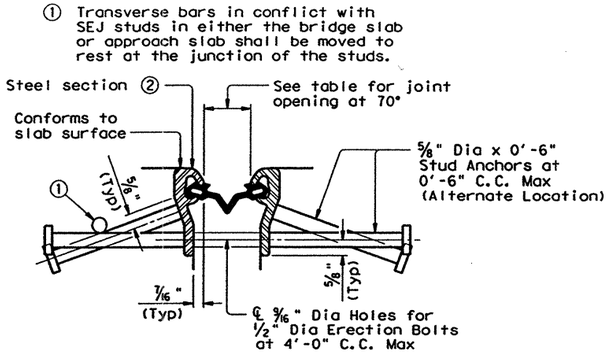

D S BROWN COMPANY

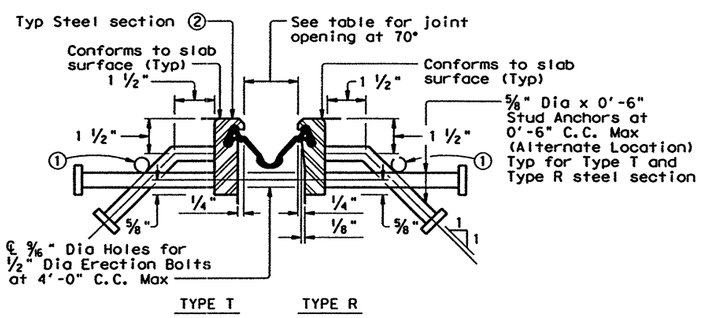

WATSON BOWMAN & ACME CORP

SECTIONS THRU SEALED EXPANSION JOINT

D.S. BROWN COMPANY

WATSON BOWMAN & ACME CORP

NEOPRENE SEAL

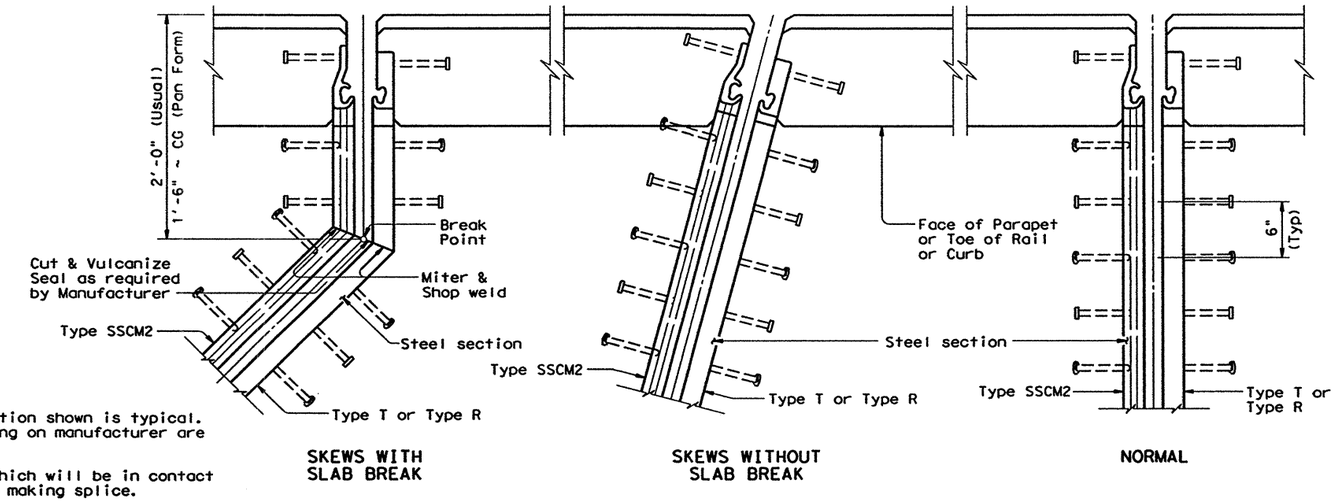

② Shape of steel section shown is typical. Variations depending on manufacturer are permissible.

③ Remove all burrs which will be in contact with seal prior to making splice.

MANUFACTURER	STEEL SECTION ②	NEOPRENE STRIP SEAL 4" JOINT	
		Seal Type	Joint Opening
D.S. Brown	Type SSCM2	A2X	1 3/4"
Watson Bowmon & Acme Corp	Type T	SE400	1 3/4"
Watson Bowmon & Acme Corp	Type R	SE400	1 3/4"

PLANS OF END CONDITIONS

④ 1/8 Bevel weld, for Type SSCM2 steel section.
3/16 Bevel weld, for Type T and Type R steel sections.

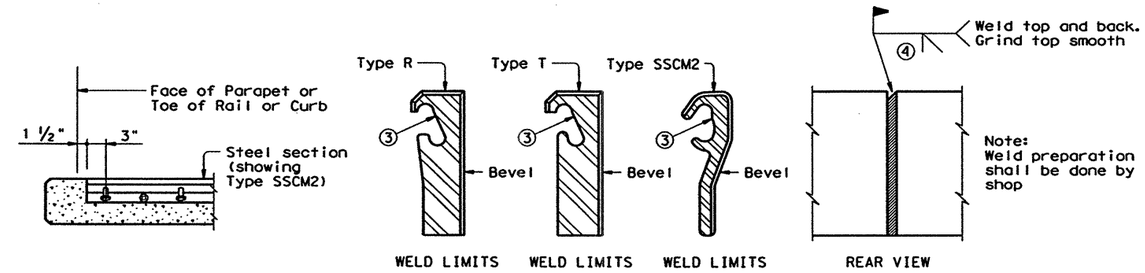

BEVEL AT FIELD SPLICE

(Not to Scale)

NOTES:

Steel sections shall be shipped in convenient lengths of 24'-0" Max and 10'-0" Min unless otherwise necessary for stage construction or widenings. One shop splice will be permitted in each shipping length provided no piece is less than 2'-0" in length and sufficient studs are added to limit the stud to shop or field splice distance to 2" Min and 4" Max.

Shop and field splices shall be made by butt welding with areas in contact with preformed joint sealer to be ground smooth.

Corresponding sections shall be match marked and bolted together for shipment.

All steel parts are not to be painted or primed unless designated elsewhere on the plans.

SECTION THRU SLAB

(HIGH SIDE)

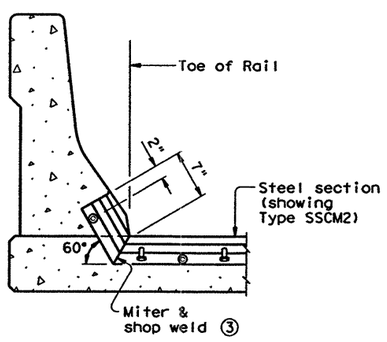

SECTION THRU BARRIER RAIL

(LOW SIDE)

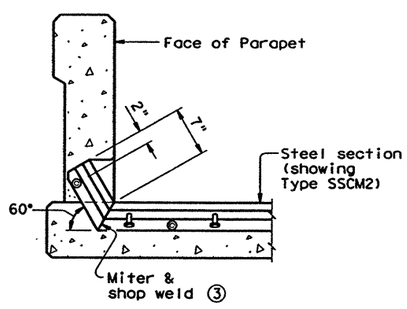

SECTION THRU OTHER PARAPET RAILS

(LOW SIDE)

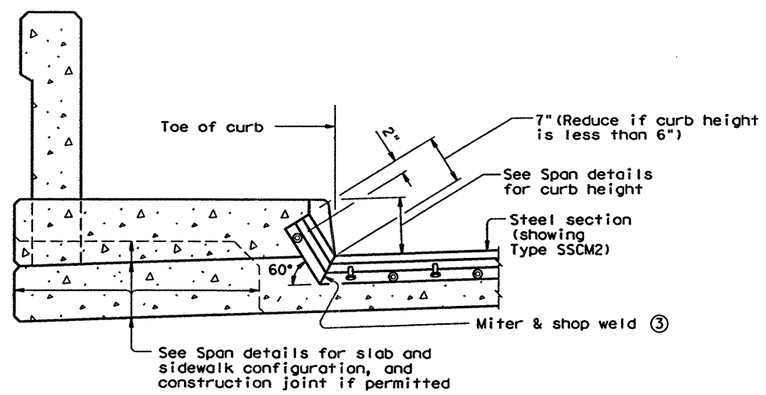

SECTION THRU SIDEWALK

(LOW SIDE)

GENERAL NOTES:

Sealed Exp Jts shall be provided in the size and at locations shown on plans.

Minimum slab thickness required for the use of SEJ-A is 6 1/2".

Shop fabrication will be required at all intersections of cross slope and at break points.

Corresponding sections of Sealed Exp Jts shall be temporarily shop assembled, checked for fit, and match marked for shipment.

Erection holes shall be punched so as to line up when Sealed Exp Jts are in their final position.

Stud anchors shall be electric arc end-welded with complete fusion.

The neoprene seal shall be continuous and included in the price bid for Sealed Exp Jt.

The Contractor shall arrange for securing the Sealed Exp Jt in position, and placing to the proper grade and alignment by welding braces to adjacent reinf steel, to prestressed beam stirrups, or to anchors cast in concrete diaframs. Cost of temporary bracing is to be included in the price bid for Sealed Exp Jt.

After bracing and welding the steel section, the erection bolts and spacers shall be removed and erection holes sealed before placing slab concrete.

Texas Department of Transportation
Design Division (Bridge)

SEALED EXPANSION JOINT DETAILS

WITHOUT OVERLAY

SEJ-A

FILE: ~~sejsetde.dgn~~	DN: THD	CK: THD	DW: JTR	CK: LDS	NEG: B272
© TxDOT September 1998	DIST	FED REG	FEDERAL AID PROJECT •		SHEET
REVISIONS	22	6	NH-2002 (79)		676
	COUNTY		CONTROL	SECT	JOB	HIGHWAY
	WEBB		0018	05	062	IH 35

DISCLAIMER:
The use of this standard is governed by the "Texas Engineering Practice Act". No warranty of any kind is made by TxDOT for any purpose whatsoever. TxDOT assumes no responsibility for the conversion of this standard to other formats or for incorrect results or damages resulting from its use.

LEVELS
1 2 3 4 5 6 7 8 9 10 11 12 13 14 15 16
17 18 19 20 21 22 23 24 25 26 27 28 29 30 31 32
33 34 35 36 37 38 39 40 41 42 43 44 45 46 47 48
49 50 51 52 53 54 55 56 57 58 59 60 61 62 63

FED ACC:
(LV=1.2 for English)

HOUFILE023 \halvilcf0130\ 4/18/2003
sej034mp127.dgn-01

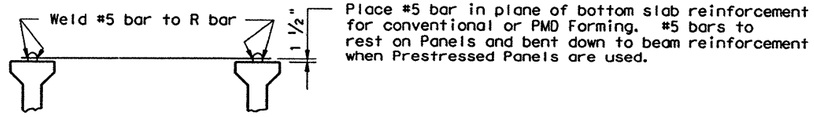

PERMANENT TOP BRACING (5)

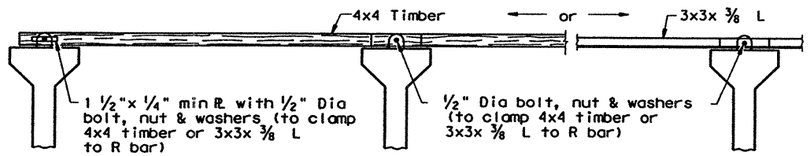

ELELVATION

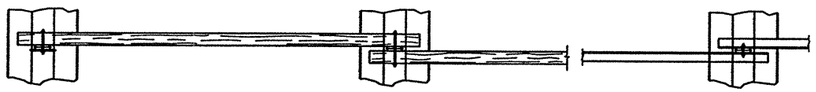

PLAN

TEMPORARY TOP BRACING (4)

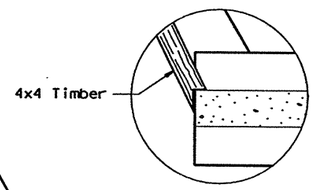

DETAIL "A"

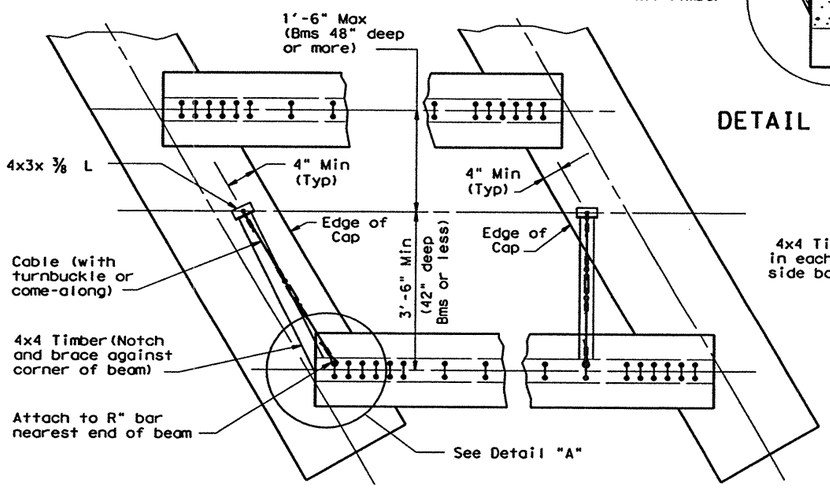

PLAN

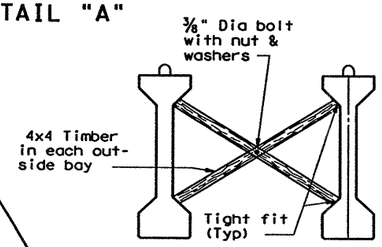

"X" BRACING (3)

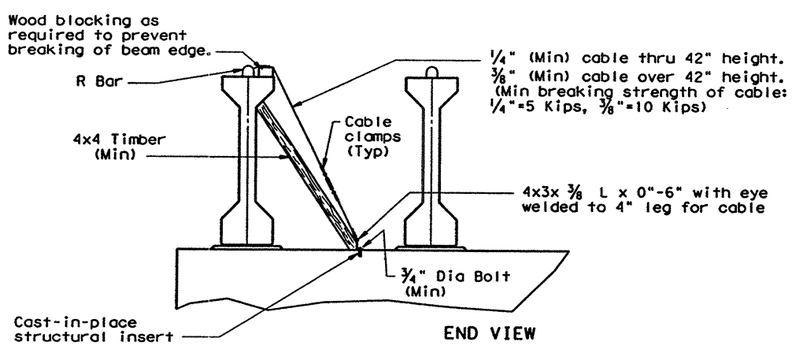

END VIEW

DIAGONAL BRACING DETAILS (1)

(To be used on both ends of the first beam erected in the span.)

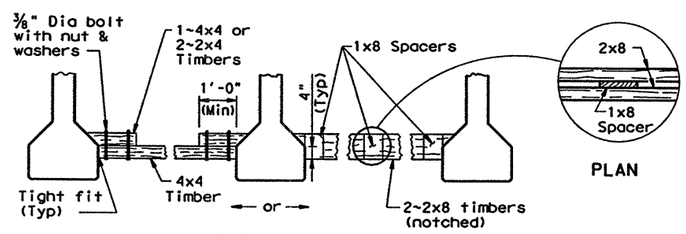

ELELVATION

PLAN

BOTTOM FLANGE BRACING DETAILS (2)

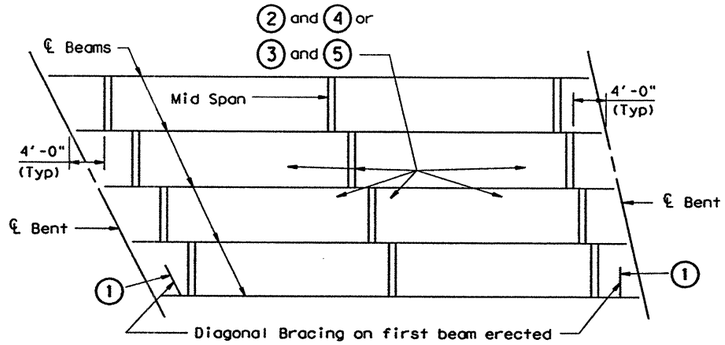

ERECTION BRACING

(NORMAL SPANS AND ALL SKEWS)

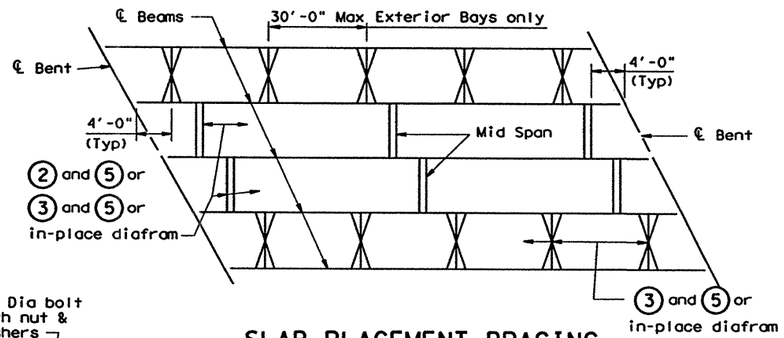

SLAB PLACEMENT BRACING

(NORMAL SPANS AND ALL SKEWS)

Indicates Diagonal Bracing (1)

Indicates Bottom Bracing (2) with Temporary Top Bracing (4) or "X" Bracing (3) with Permanent Top Bracing (5).

Indicates Permanent Top Bracing (5)

Indicates Bottom Bracing (2) or "X" Bracing (3), either one with Permanent Top Bracing (5) or an in-place diafram only.

Indicates "X" Bracing (3) & Permanent Top Bracing (5) or an in-place diafram only.

GENERAL NOTES:

ERECTION BRACING:

Erection bracing details are considered minimum for fulfilling the requirements of Specification Item 425 for bracing Types A, B, C, III, IV, and V prestressed concrete beams erected in the span over a traveled way or railroad, and in those spans generally parallel to a traveled way or railroad and within a distance equal to the difference in elevation between the top of cap upon which the beams are being erected and the traveled way, or 30 feet, whichever is greater.

Required erection bracing shall be placed immediately after erection of each beam and remain in place until diafram bars DN are tightened or additional bracing as required for slab placement is in place. This Standard is needed in all cases to meet requirements for Slab Placement Bracing.

SLAB PLACEMENT BRACING:

The details for slab placement bracing are considered minimum for fulfilling the requirements of Specification Item 420 regardless of where erected.

Required slab placement bracing shall remain in place until slab concrete has attained a flexural strength of 500 psi.

GENERAL:

Bracing details for closely spaced beams (as on ramps or railroad structures) are not included herein. The Contractor shall submit his proposed bracing details for such conditions to the Engineer for approval prior to erection.

Systems equal to or better than those shown may be used provided details of such systems are submitted to and approved by the Engineer prior to erection.

Use of these systems and/or details does not relieve the Contractor of the responsibility for the adequacy of the bracing and the safety of the structure.

Removal of bracing for short periods of time to align beams is permissible.

Bottom flange bracing at beam ends may be omitted when all beams are fixed with dowel bars or when erection is on steel caps or floor beams containing bearing seats which restrict lateral movement.

All turn-buckles, come-alongs and other connections shall be capable of developing the full strength of the cable shown hereon.

DISCLAIMER:
The use of this standard is governed by the "Texas Engineering Practice Act". No warranty of any kind is made by TxDOT for any purpose whatsoever. TxDOT assumes no responsibility for the conversion of this standard to other formats or for incorrect results or damages resulting from its use.

LEVELS 1 2 3 4 5 6 7 8 9 10 11 12 13 14 15 16 17 18 19 20 21 22 23 24 25 26 27 28 29 30 31 32 33 34 35 36 37 38 39 40 41 42 43 44 45 46 47 48 49 50 51 52 53 54 55 56 57 58 59 60 61 62 63

DATED

ACC:

(LV=1,2 for English)

Texas Department of Transportation
Design Division (Bridge)

MINIMUM ERECTION AND BRACING REQUIREMENTS

PRESTRESSED CONCRETE BEAM TYPES A, B, C, III, IV & V

MEBR(C)-1

FILE: mebrc1etc.dgn	DN: THD	CK: THD	DW: LW	CK: LDS	NEG: B112A	
©TxDOT September 1998	DIST	FED REG	FEDERAL AID PROJECT			SHEET
REVISIONS	22	6	NH-2002 (79)			677
	COUNTY		CONTROL	SECT	JOB	HIGHWAY
	WEBB		0018	05	062, ETC	IH 35

b34mp121.dgn-01 HOUFILE023 \hcivil\cf0130\ 4/18/2003

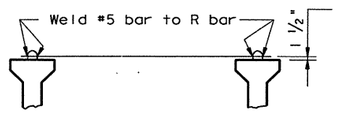

Place #5 bar in plane of bottom slab reinforcement for conventional or PMD Forming. #5 bars to rest on Panels and bent down to beam reinforcement when Prestressed Panels are used.

PERMANENT TOP BRACING (5)

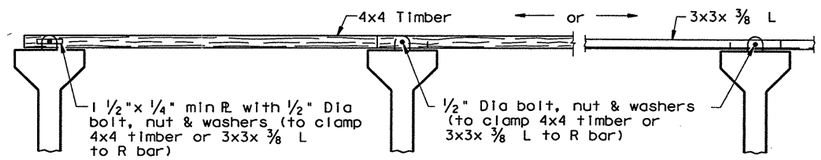

ELELVATION

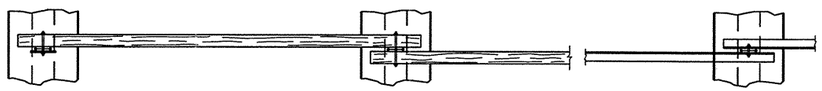

PLAN

TEMPORARY TOP BRACING (4)

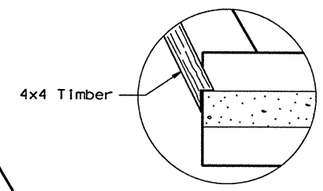

DETAIL "A"

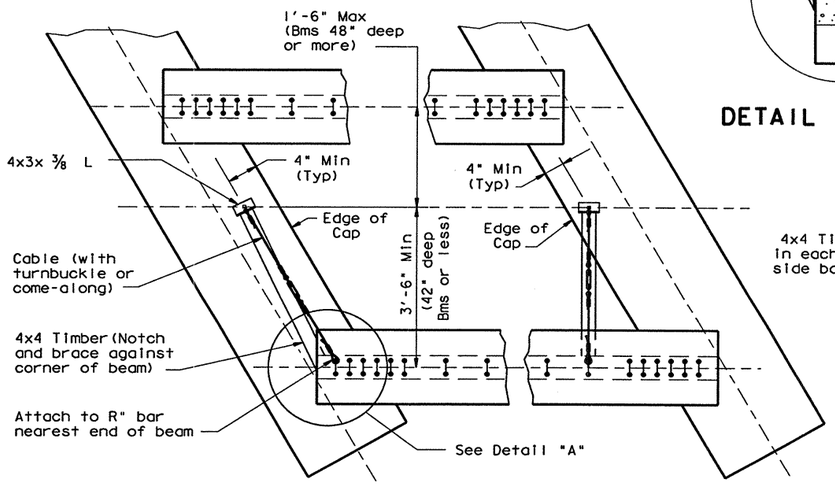

PLAN

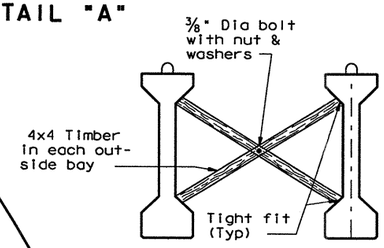

"X" BRACING (3)

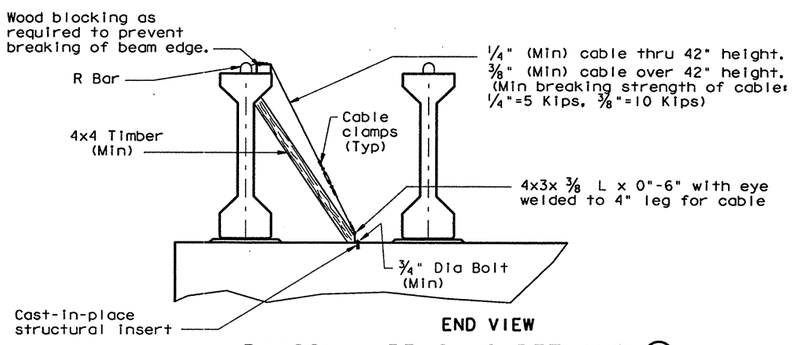

END VIEW

DIAGONAL BRACING DETAILS (1)

(~~To be~~ used on both ends of the first beam erected in the span.)

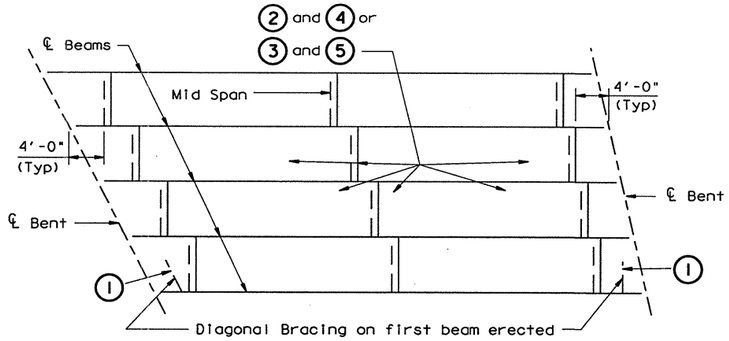

ERECTION BRACING

(NORMAL SPANS AND ALL SKEWS)

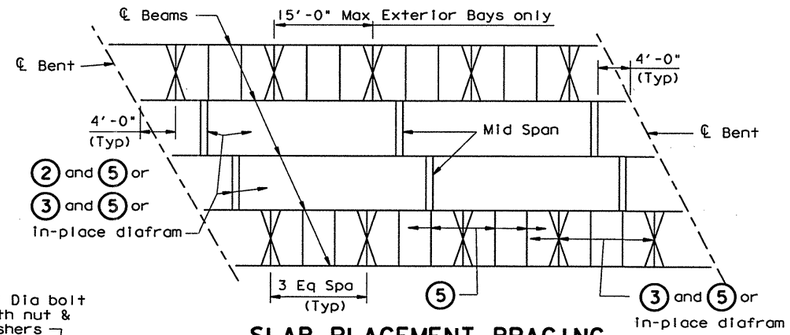

SLAB PLACEMENT BRACING

(NORMAL SPANS AND ALL SKEWS)

Indicates Diagonal Bracing (1)

Indicates Bottom Bracing (2) with Temporary Top Bracing (4) or "X" Bracing (3) with Permanent Top Bracing (5).

Indicates Permanent Top Bracing (5)

Indicates Bottom Bracing (2) or "X" Bracing (3), either one with Permanent Top Bracing (5) or an in-place diafram only.

Indicates "X" Bracing (3) & Permanent Top Bracing (5) or an in-place diafram only.

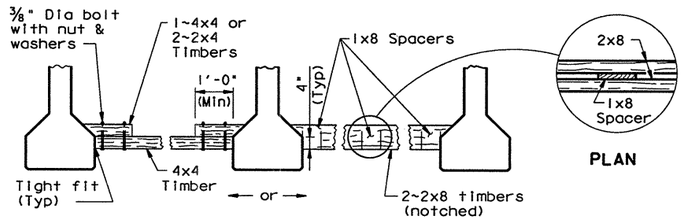

ELELVATION

PLAN

BOTTOM FLANGE BRACING DETAILS (2)

GENERAL NOTES:

HAULING & ERECTION

The Contractor's attention is directed to the possible lateral instability of Type 48 thru 72 prestressed concrete beams, especially during hauling and erection. The use of the following methods of improving the stability of these beams is encouraged and ~~shall be~~ used when required: Location of lifting devices at the maximum practical distance from the beam ends; use of external lateral stiffening devices during hauling and erection; lifting with vertical lines using two machines and care in handling to minimize inertial and impact forces. External adjustable stiffening devices (hog rods) ~~will be~~ required for any beam in excess of the following actual beam lengths.

Type 48	87'	Type 66	113'
Type 54	96'	Type 72	122'
Type 60	104'	Type 54 Mod(12"Web)	113'

These devices ~~shall~~ remain on the beam during hauling from the casting yard and during erection until the required bracing is installed.

ERECTION BRACING:

Erection bracing details are considered minimum for bracing Types 48, 54, 60, 66, 72, VI (MOD) and 54 Mod (12"Web) prestressed concrete beams regardless of where erected.

Required erection bracing ~~shall be~~ placed immediately after erection of each beam and remain in place until diafram bars DN are tightened or additional bracing as required for slab placement is in place. This standard is needed in all cases to meet requirements for Slab Placement Bracing.

SLAB PLACEMENT BRACING:

The details for slab placement bracing are considered minimum for fulfilling the requirements of Specification Item 420 regardless of where erected.

Required slab placement bracing ~~shall~~ remain in place until slab concrete has attained a flexural strength of 500 psi.

GENERAL:

Bracing details for closely spaced beams (as on ramps or railroad structures) are not included herein. The Contractor ~~shall~~ submit his proposed bracing details for such conditions to the Engineer for approval prior to erection.

Systems equal to or better than those shown ~~may be~~ used provided details of such systems are submitted to and approved by the Engineer prior to erection.

Use of these systems and/or details does not relieve the Contractor of the responsibility for the adequacy of the bracing and the saftey of the structure.

Removal of bracing for short periods of time to align beams is permissible.

Bottom flange bracing at beam ends may be omitted when all beams are fixed with dowel bars or when erection is on steel caps or floor beams containing bearing seats which restrict lateral movement.

All turn-buckles, come-alongs and other connections ~~shall be~~ capable of developing the full strength of the cable shown hereon.

DISCLAIMER:
The use of this standard is governed by the "Texas Engineering Practice Act". No warranty of any kind is made by TxDOT for any purpose whatsoever. TxDOT assumes no responsibility for the conversion of this standard to other formats or for incorrect results or damages resulting from its use.

LEVELS DISPLAYED (LV=1,2 for English) ACC:

1	2	3	4	5	6	7	8	9	10	11	12	13	14	15	16
17	18	19	20	21	22	23	24	25	26	27	28	29	30	31	32
33	34	35	36	37	38	39	40	41	42	43	44	45	46	47	48
49	50	51	52	53	54	55	56	57	58	59	60	61	62	63	

STATE OF TEXAS
JAMES B. HORNSBY
81485
REGISTERED PROFESSIONAL ENGINEER

THE SEAL APPEARING ON THIS DOCUMENT WAS AUTHORIZED BY JAMES B. HORNSBY P.E. 81485, ON JUNE 02, 2003

MODIFIED TO INCLUDE TY VI BEAMS (MOD)

Texas Department of Transportation
Design Division (Bridge)

MINIMUM ERECTION AND BRACING REQUIREMENTS

PRESTRESSED CONCRETE BEAM TYPES 48, 54, 60, 66, VI (MOD) & 72

MEBR(C)-2(MOD)

FILE: mebc2ste.dgn	DN: THD	CK: THD	DW: LW	CK: LDS	NEG: BI12B
©TxDOT September 1998	DIST	FED REG	FEDERAL AID PROJECT		SHEET
REVISIONS	22	6	NH-2002 (79)		678
	COUNTY		CONTROL	SECT	JOB	HIGHWAY
	WEBB		0018	05	062, ETC	IH 35

6/4/2003
b34mb122.dgn-02 HOUFILE023 \hcivil\cf0130\

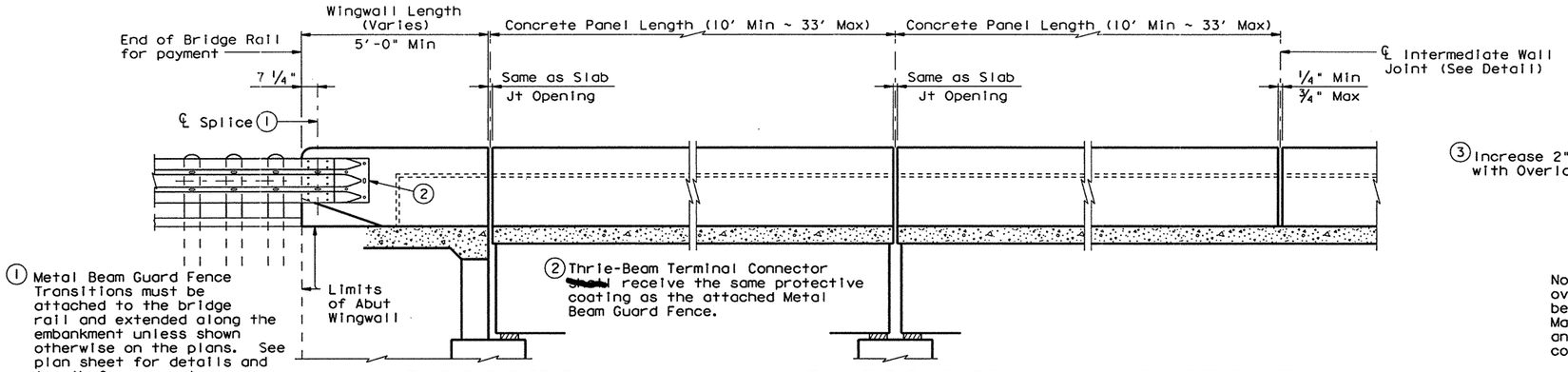

ROADWAY ELEVATION OF RAIL

(3) Increase 2" for structures with Overlay.

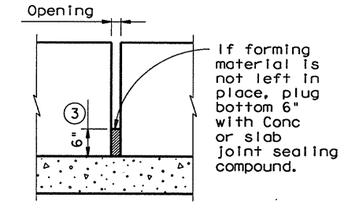

INTERMEDIATE WALL JOINT DETAIL

Note: Provide intermediate wall joints over all slab construction joints, over interior supports on continuous units, and at equal intervals in between as necessary to maintain a 33' maximum length of unbroken wall. Material used in forming joint may be left in place if it is compressible and light in color such as the following materials: polystyrene, molded cork granules, sponge rubber sheet, etc.

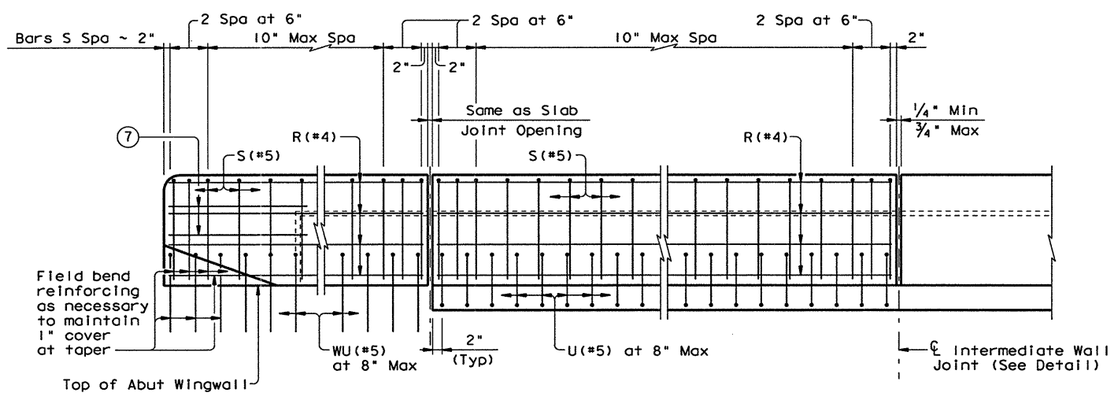

ELEVATION SHOWING TYPICAL REINFORCING PLACEMENT

℄ 5 ~ 7/8" Dia A325 Hex Head Bolts with two 1 3/4" O.D. washers. Place washer under each head and nut. The 5 Terminal Connection Bolts ~~shall be~~ tightened in a well distributed pattern so to prevent damage or distortion of the Thrie-Beam Connection and the MBGF Transition. Bolts ~~shall be~~ cut off after installation so as to extend no more than 3/4" beyond nut. End of cut-off bolt ~~shall be~~ painted with Zinc-rich paint.

℄ 5 ~ 1" Dia holes and 2 1/2" Dia x 2" deep recesses. Holes and recesses must be formed or cored. Percussion drilling is not permitted. Adjust placement of reinforcing steel as necessary to avoid bolt holes and recesses.

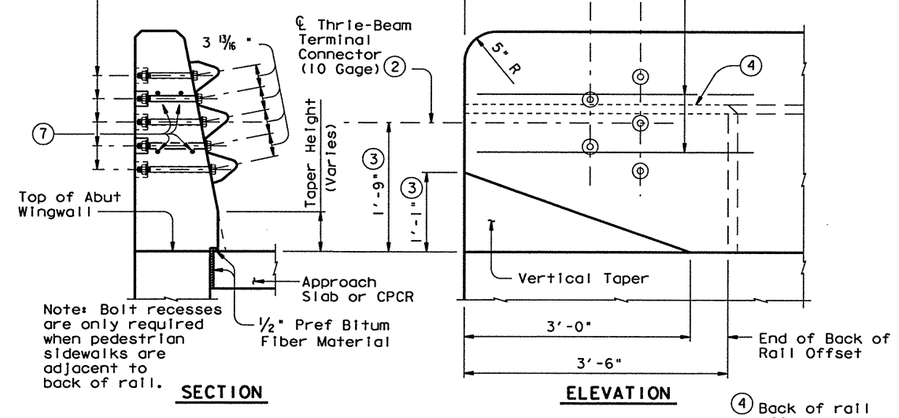

TERMINAL CONNECTION DETAILS

4 additional Bars R(#4) 3'-8" in length ~~shall be~~ placed inside Bars S(#5) and centered 2'-0" from end of rail when Terminal Connections are required.

(4) Back of rail offset may, with Engineer's approval be continued to the end of the railing.

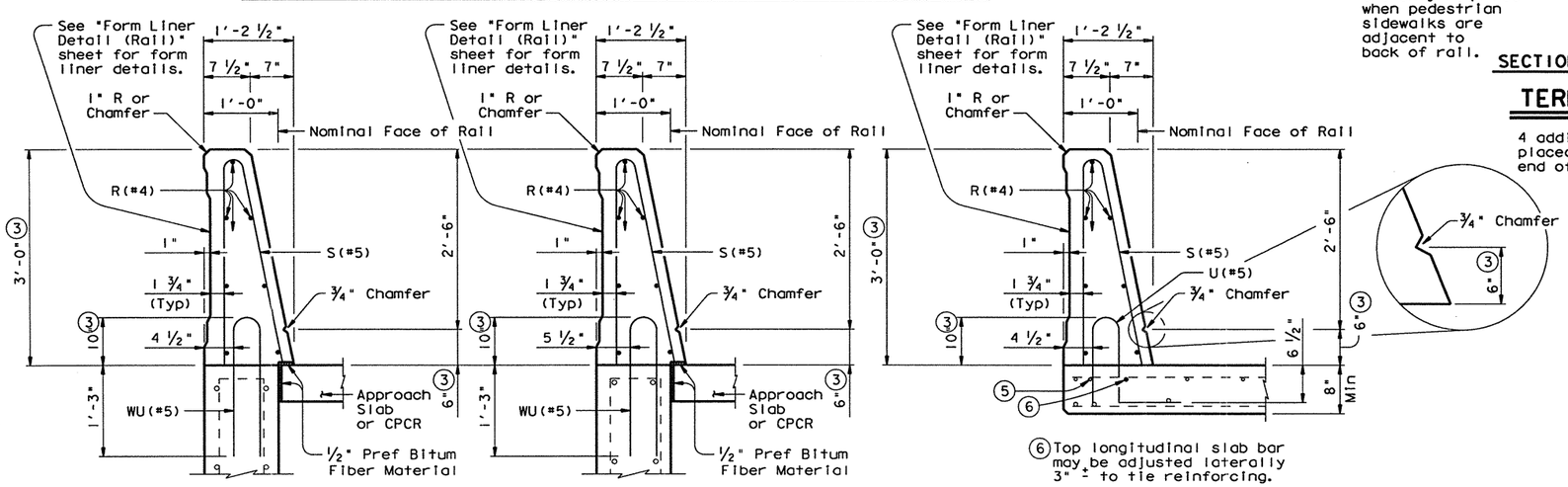

SECTIONS THRU RAIL

(6) Top longitudinal slab bar may be adjusted laterally 3" ± to tie reinforcing.

(5) As an aid in supporting reinforcement, additional longitudinal bars may be used in the slab with the approval of the Engineer. Such bars shall be furnished at the Contractors expense.

STATE OF TEXAS
JAMES B. HORNSBY
81485
REGISTERED PROFESSIONAL ENGINEER

THE SEAL APPEARING ON THIS DOCUMENT WAS AUTHORIZED BY JAMES B. HORNSBY P.E. 81485, ON JUNE 02, 2003

MODIFIED TO INCLUDE ARCHITECTURAL TREATMENT

Sheet 1 of 2

Texas Department of Transportation
Bridge Division

SINGLE SLOPE TRAFFIC RAILING

TYPE SSTR (MOD)

FILE: rlside37.dgn	DN: GHO	CK: TxDOT	DW: JTR	CK: DWM
©TxDOT February 2003	DISTRICT	FEDERAL AID PROJECT		SHEET
REVISIONS	22	NH-2002 (79)		679
	COUNTY	CONTROL	SECT	JOB	HIGHWAY
	WEBB	0018	05	062, ETC	IH 35

DISCLAIMER:
The use of this standard is governed by the "Texas Engineering Practice Act". No warranty of any kind is made by TxDOT for any purpose whatsoever. TxDOT assumes no responsibility for the conversion of this standard to other formats or for incorrect results or damages resulting from its use.

LEVELS DISPLAYED ACC:

b34mp148.dgn-02 HOUFILE023 \hcivil\cf0130\ 6/4/2003

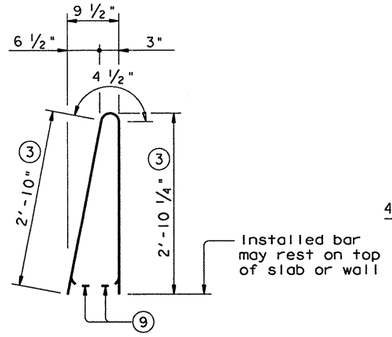

BARS S (#5)

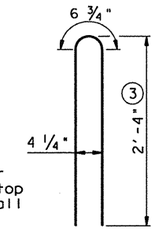

BARS WU (#5)

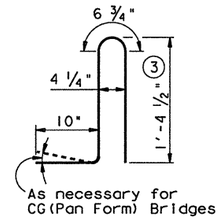

BARS U (#5)

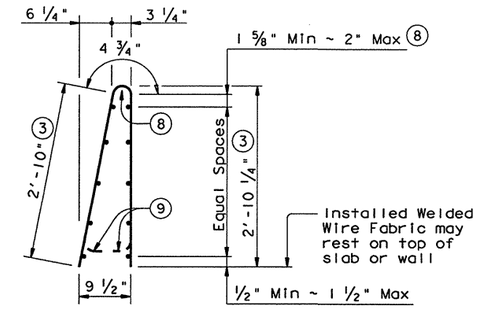

OPTIONAL WELDED WIRE FABRIC

DESCRIPTION	LONGITUDINAL WIRES	VERTICAL WIRES
Minimum (Cumulative Total) Wire Area	0.933 Sq In.	0.248 Sq In. per Ft
	No. of Wires	Spacing
Minimum	6	4"
Maximum	11	12"
Maximum Wire Size Differential	The smaller wire ~~shall~~ have an area of 40% or more of the larger wire.	

③ Increase 2" for structures with Overlay.

⑧ No longitudinal wires may be within upper bend.

⑨ Bend or cut as required to clear drain slots.

GENERAL NOTES:

This rail has been evaluated and accepted ~~to be~~ of equal strength to other safety-shaped railings with like geometry, which have been crash tested to meet NCHRP Report 350 TL-4 criteria and can be used for design speeds of 50 mph and greater.

All parts of the railing including concrete parapet wall, reinforcing, MBGF connections, bolts, nuts and washers are included in the price bid per linear foot of rail.

All steel components except reinforcing ~~shall be~~ galvanized unless otherwise shown in plans.

All concrete for railing wall ~~shall be~~ Class "C".

All reinforcing steel ~~shall be~~ grade 60.

Shop drawings will not be required for this rail.

This railing ~~may be~~ constructed with slip-forms when shown on the plans or approved by the Engineer, with equipment approved by the Engineer. Sensor control for both line and grade must be provided. When slip-forming is used, the concrete may be cured with membrane curing compound.

Additional reinforcing may be tack welded to the upper two thirds of the reinforcing cage to provide bracing when slip-forming is used. Additional anchorage devices may be added when welding is necessary in the lower one third of the cage. Do not weld to U or S bars in the lower one third of the cage.

The back of railing ~~shall be~~ vertical unless otherwise shown in the plans or approved by the Engineer.

Deformed welded wire fabric may be used as an option to conventional reinforcement and ~~shall~~ be made in accordance with ASTM A497 (Deformed Wire). Combinations of Reinforcing Steel and Welded Wire Fabric or configurations of Welded Wire Fabric other than shown will be permitted when the conditions in the table are satisfied and the dimension from end of section to first welded vertical wire does not exceed 3".

Epoxy coat bars U and WU if slab bars are epoxy coated.

Average weight of railing with no overlay is 376 plf.

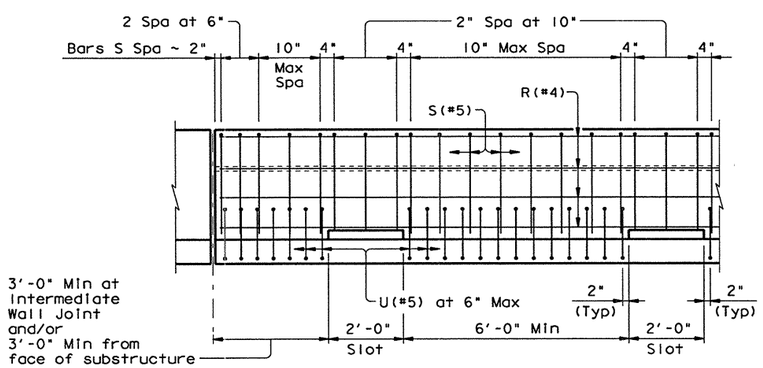

OPTIONAL SIDE SLOT DRAIN DETAIL

Note: Side Slot Drains may be used where shown elsewhere on the plans or as directed by the Engineer. Drains should not be placed over railroad tracks, lower roadways, or sidewalks. When this rail is used as a separator between a roadway surface and a sidewalk surface, side drain slots will not be permitted.

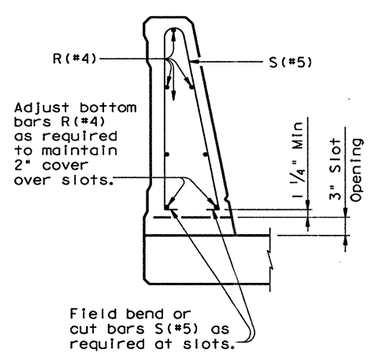

SECTION THRU OPTIONAL SIDE SLOT DRAIN

THE SEAL APPEARING ON THIS DOCUMENT WAS AUTHORIZED BY JAMES B. HORNSBY P.E. 81485, ON JUNE 02, 2003

MODIFIED TO INCLUDE ARCHITECTURAL TREATMENT

Sheet 2 of 2

Texas Department of Transportation
Bridge Division

SINGLE SLOPE TRAFFIC RAILING

TYPE SSTR (MOD)

FILE: rlside37.dgn	DN: GHO	CK: TxDOT	DW: JTR	CK: DWM
© TxDOT February 2003	DISTRICT	FEDERAL AID PROJECT		SHEET
REVISIONS	22	NH-2002 (79)		680
	COUNTY	CONTROL	SECT	JOB	HIGHWAY
	WEBB	0018	05	062, ETC	IH 35

DISCLAIMER:
The use of this standard is governed by the "Texas Engineering Practice Act". No warranty of any kind is made by TxDOT for any purpose whatsoever. TxDOT assumes no responsibility for the conversion of this standard to other formats or for incorrect results or damages resulting from its use.

LEVELS DISPLAYED

	1	2	3	4	5	6	7	8	9	10	11	12	13	14	15	16
17	18	19	20	21	22	23	24	25	26	27	28	29	30	31	32	
33	34	35	36	37	38	39	40	41	42	43	44	45	46	47	48	
49	50	51	52	53	54	55	56	57	58	59	60	61	62	63		

ACC:

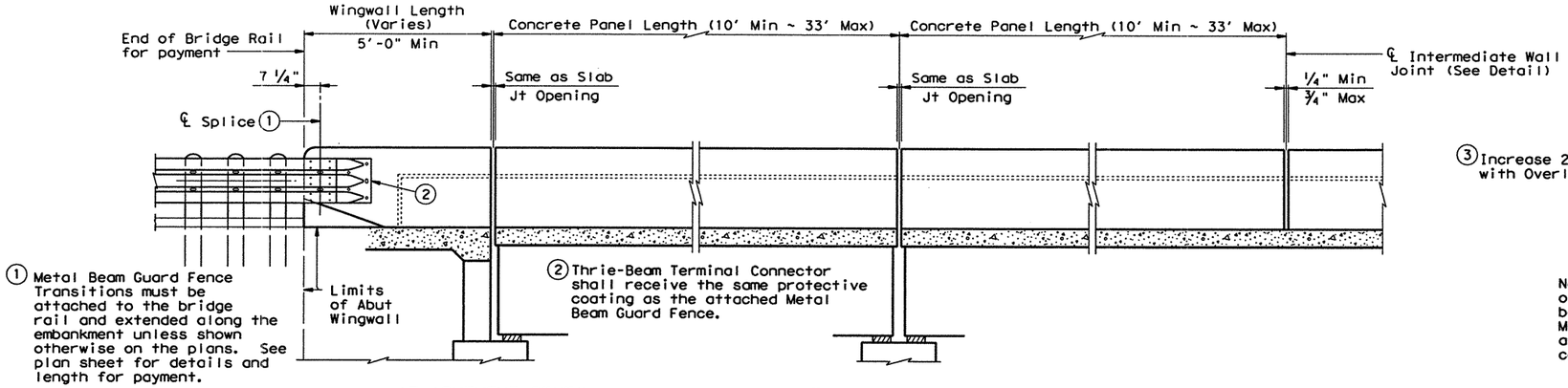

(1) Metal Beam Guard Fence Transitions must be attached to the bridge rail and extended along the embankment unless shown otherwise on the plans. See plan sheet for details and length for payment.

(2) Thrie-Beam Terminal Connector shall receive the same protective coating as the attached Metal Beam Guard Fence.

AT ABUTMENT BENTS

AT SLAB EXP JOINTS

AT INTERMEDIATE WALL JOINTS

ROADWAY ELEVATION OF RAIL

(3) Increase 2" for structures with Overlay.

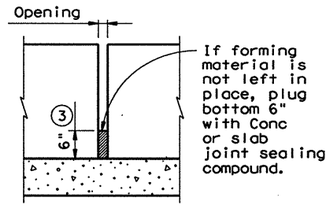

INTERMEDIATE WALL JOINT DETAIL

Note: Provide intermediate wall joints over all slab construction joints, over interior supports on continuous units, and at equal intervals in between as necessary to maintain a 33' maximum length of unbroken wall. Material used in forming joint may be left in place if it is compressible and light in color such as the following materials: polystyrene, molded cork granules, sponge rubber sheet, etc.

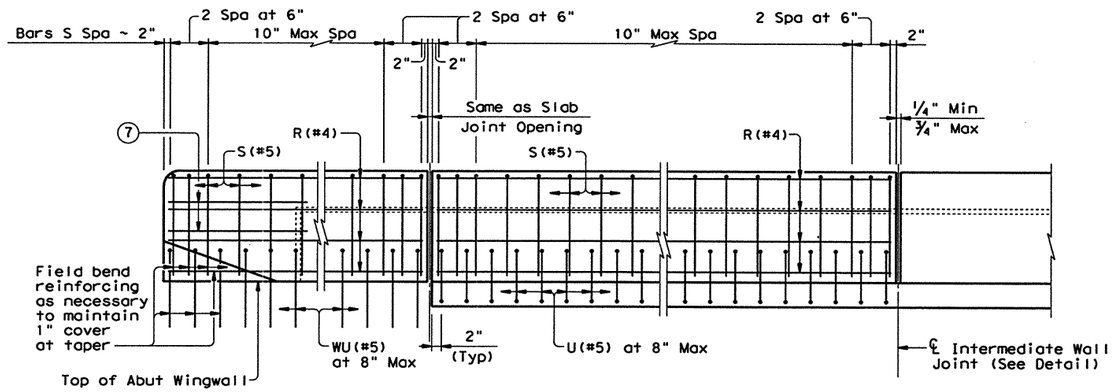

ELEVATION SHOWING TYPICAL REINFORCING PLACEMENT

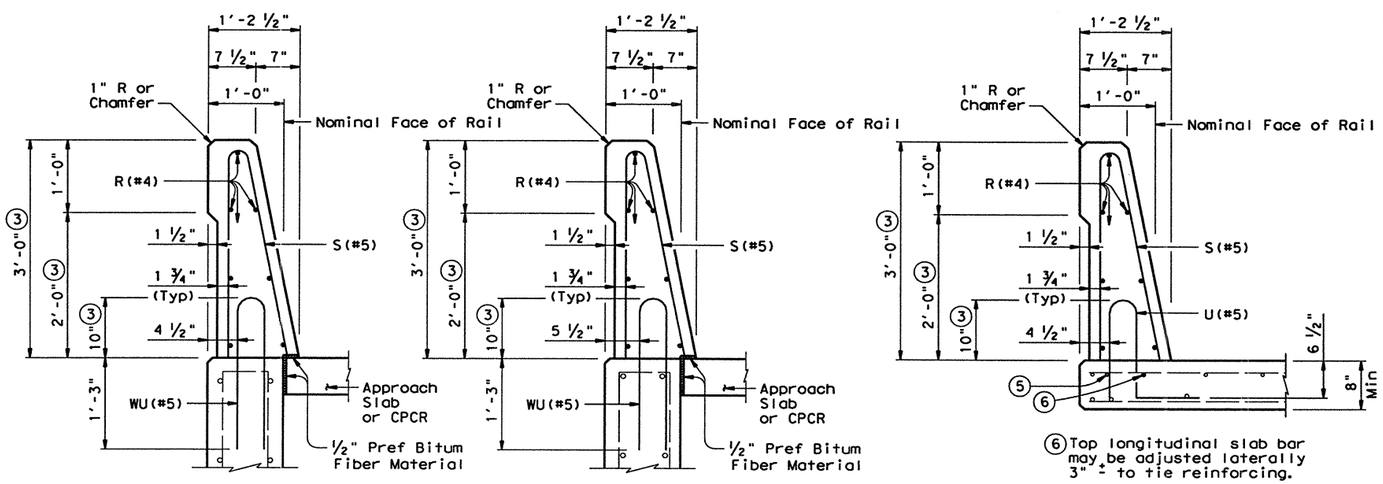

ON CANTILEVER ABUT WINGWALLS OR CIP RETAINING WALLS

ON FOUNDED ABUT WINGWALLS

ON BRIDGE SLAB

SECTIONS THRU RAIL

(6) Top longitudinal slab bar may be adjusted laterally 3" ± to tie reinforcing.

(5) As an aid in supporting reinforcement, additional longitudinal bars may be used in the slab with the approval of the Engineer. Such bars shall be furnished at the Contractors expense.

℄ 5 ~ ⅞" Dia A325 Hex Head Bolts with two 1 ¾" O.D. washers. Place washer under each head and nut. The 5 Terminal Connection Bolts shall be tightened in a well distributed pattern so to prevent damage or distortion of the Thrie-Beam Connection and the MBGF Transition. Bolts shall be cut off after installation so as to extend no more than ¾" beyond nut. End of cut-off bolt shall be painted with Zinc-rich paint.

℄ 5 ~ 1" Dia holes and 2 ½" Dia x 2" deep recesses. Holes and recesses must be formed or cored. Percussion drilling is not permitted. Adjust placement of reinforcing steel as necessary to avoid bolt holes and recesses.

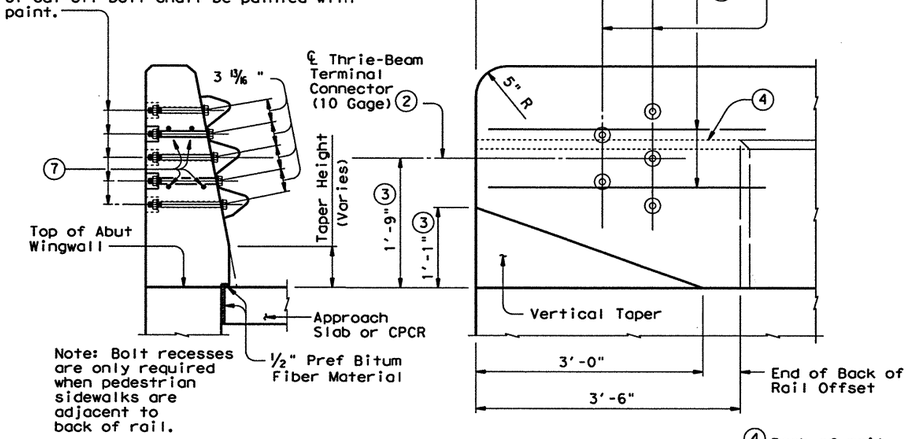

SECTION

ELEVATION

TERMINAL CONNECTION DETAILS

(7) 4 additional Bars R(#4) 3'-8" in length shall be placed inside Bars S(#5) and centered 2'-0" from end of rail when Terminal Connections are required.

(4) Back of rail offset may, with Engineer's approval be continued to the end of the railing.

Sheet 1 of 2

Texas Department of Transportation
Bridge Division

SINGLE SLOPE TRAFFIC RAILING

TYPE SSTR

FILE: ~~rlsrde37.dgn~~	DN: GHO	CK: TxDOT	DW: JTR	CK: DWM
©TxDOT February 2003	DISTRICT	FEDERAL AID PROJECT		SHEET
REVISIONS	22	NH-2002 (79)		680A
	COUNTY	CONTROL	SECT	JOB	HIGHWAY
	WEBB	0018	05	062, ETC	IH 35

DISCLAIMER:
The use of this standard is governed by the "Texas Engineering Practice Act". No warranty of any kind is made by TxDOT for any purpose whatsoever. TxDOT assumes no responsibility for the conversion of this standard to other formats or for incorrect results or damages resulting from its use.

LEVELS DISPLAYED
1 2 3 4 5 6 7 8 9 10 11 12 13 14 15 16
17 18 19 20 21 22 23 24 25 26 27 28 29 30 31 32
33 34 35 36 37 38 39 40 41 42 43 44 45 46 47 48
49 50 51 52 53 54 55 56 57 58 59 60 61 62 63

ACC:

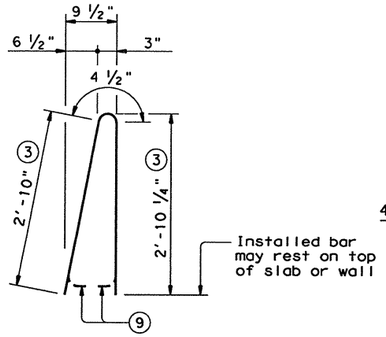

BARS S (#5)

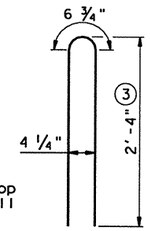

BARS WU (#5)

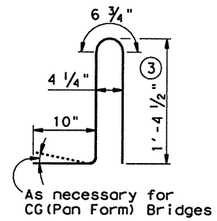

BARS U (#5)

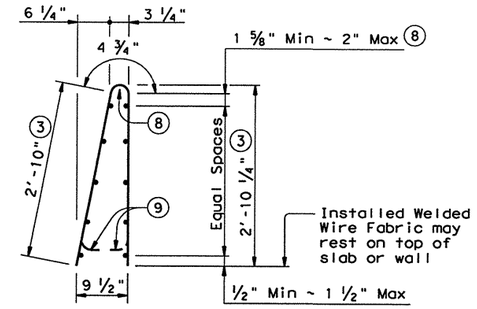

OPTIONAL WELDED WIRE FABRIC

DESCRIPTION	LONGITUDINAL WIRES	VERTICAL WIRES
Minimum (Cumulative Total) Wire Area	0.933 Sq In.	0.248 Sq In. per Ft
	No. of Wires	Spacing
Minimum	6	4"
Maximum	11	12"
Maximum Wire Size Differential	The smaller wire shall have an area of 40% or more of the larger wire.	

③ Increase 2" for structures with Overlay.

⑧ No longitudinal wires may be within upper bend.

⑨ Bend or cut as required to clear drain slots.

GENERAL NOTES:

This rail has been evaluated and accepted to be of equal strength to other safety-shaped railings with like geometry, which have been crash tested to meet NCHRP Report 350 TL-4 criteria and can be used for design speeds of 50 mph and greater.

All parts of the railing including concrete parapet wall, reinforcing, MBGF connections, bolts, nuts and washers are included in the price bid per linear foot of rail.

All steel components except reinforcing shall be galvanized unless otherwise shown in plans.

All concrete for railing wall shall be Class "C".

All reinforcing steel shall be grade 60.

Shop drawings will not be required for this rail.

This railing may be constructed with slip-forms when shown on the plans or approved by the Engineer, with equipment approved by the Engineer. Sensor control for both line and grade must be provided. When slip-forming is used, the concrete may be cured with membrane curing compound.

Additional reinforcing may be tack welded to the upper two thirds of the reinforcing cage to provide bracing when slip-forming is used. Additional anchorage devices may be added when welding is necessary in the lower one third of the cage. Do not weld to U or S bars in the lower one third of the cage.

The back of railing shall be vertical unless otherwise shown in the plans or approved by the Engineer.

Deformed welded wire fabric may be used as an option to conventional reinforcement and shall be made in accordance with ASTM A497 (Deformed Wire). Combinations of Reinforcing Steel and Welded Wire Fabric or configurations of Welded Wire Fabric other than shown will be permitted when the conditions in the table are satisfied and the dimension from end of section to first welded vertical wire does not exceed 3".

Epoxy coat bars U and WU if slab bars are epoxy coated.

Average weight of railing with no overlay is 376 plf.

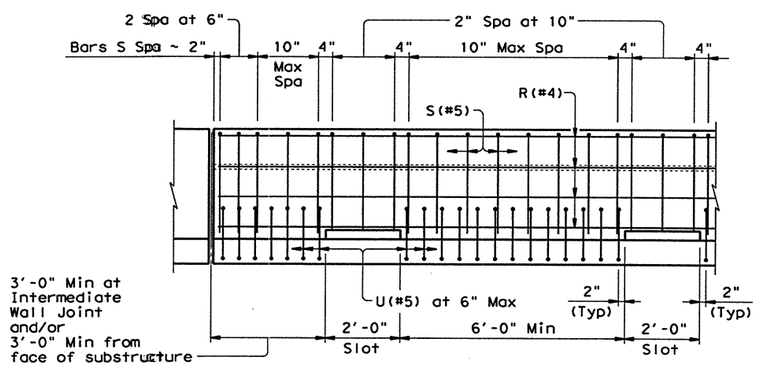

OPTIONAL SIDE SLOT DRAIN DETAIL

Note: Side Slot Drains may be used where shown elsewhere on the plans or as directed by the Engineer. Drains should not be placed over railroad tracks, lower roadways, or sidewalks. When this rail is used as a separator between a roadway surface and a sidewalk surface, side drain slots will not be permitted.

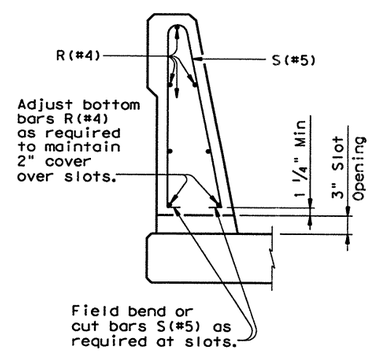

SECTION THRU OPTIONAL SIDE SLOT DRAIN

DISCLAIMER:
The use of this standard is governed by the "Texas Engineering Practice Act". No warranty of any kind is made by TxDOT for any purpose whatsoever. TxDOT assumes no responsibility for the conversion of this standard to other formats or for incorrect results or damages resulting from its use.

LEVELS DISPLAYED

1	2	3	4	5	6	7	8	9	10	11	12	13	14	15	16
17	18	19	20	21	22	23	24	25	26	27	28	29	30	31	32
33	34	35	36	37	38	39	40	41	42	43	44	45	46	47	48
49	50	51	52	53	54	55	56	57	58	59	60	61	62	63	

ACC:

Sheet 2 of 2

Texas Department of Transportation
Bridge Division

SINGLE SLOPE TRAFFIC RAILING

TYPE SSTR

FILE: ~~rlsld37.dgn~~	DN: GHO	CK: TxDOT	DW: JTR	CK: DWM
© TxDOT February 2003	DISTRICT	FEDERAL AID PROJECT		SHEET
REVISIONS	22	NH-2002 (79)		680 B

COUNTY	CONTROL	SECT	JOB	HIGHWAY
WEBB	0018	05	062 ETC	IH 35

6/4/2003

HOUFILE023 \hcivil\cf0130\ 534mp172.dgn-03

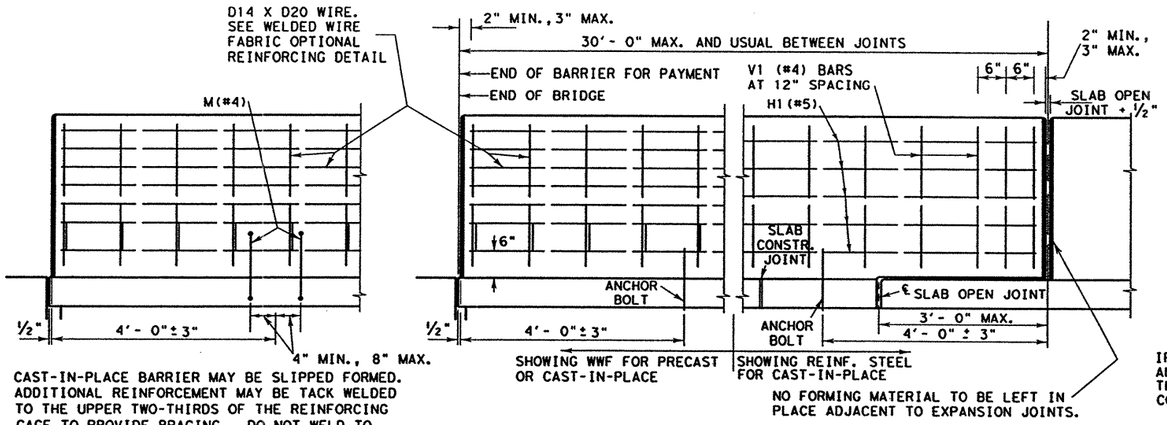

CAST-IN-PLACE BARRIER MAY BE SLIPPED FORMED. ADDITIONAL REINFORCEMENT MAY BE TACK WELDED TO THE UPPER TWO-THIRDS OF THE REINFORCING CAGE TO PROVIDE BRACING. DO NOT WELD TO M BARS OR ANCHOR BOLTS.

ELEVATION OF TRAFFIC BARRIER

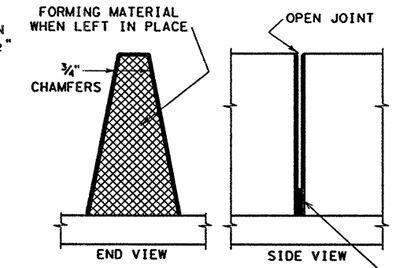

IF FORMING MATERIAL IS NOT LEFT IN PLACE, AND BARRIER IS ON LOW SIDE OF ROADWAY, THE BOTTOM 6" SHALL BE PLUGGED WITH CONCRETE OR JOINT SEALING COMPOUND.

GENERAL NOTES

1. ALL CONCRETE, REINFORCEMENT, ANCHOR BOLTS, BLOCKING, GROUT, ETC., AS SHOWN ARE CONSIDERED AS PART OF THE BARRIER FOR PAYMENT.
2. CONCRETE FOR BARRIER SHALL BE CLASS A, C OR H. ALL REINFORCING STEEL SHALL BE GRADE 60, UNLESS OTHERWISE SPECIFIED.
3. WELDED WIRE FABRIC (WWF) MADE IN ACCORDANCE WITH ASTM A497 MAY BE USED AS AN OPTION TO THE CONVENTIONAL REINFORCEMENT FOR PRECAST OR CAST-IN-PLACE BARRIER WITH THE EXCEPTION THAT ONLY CONVENTIONAL REINFORCEMENT MAY BE USED FOR LIGHT POLE SECTIONS. THESE SECTIONS SHALL BE CAST-IN-PLACE WITH LENGTH, SHAPE, ANCHORAGE, AND REINFORCEMENT AS DETAILED ON SHEET SSCB (4).
4. CAST-IN-PLACE BARRIER MAY BE SLIPPED FORMED. ADDITIONAL REINFORCEMENT MAY BE TACK WELDED TO THE UPPER TWO-THIRDS OF THE REINFORCING CAGE TO PROVIDE BRACING. DO NOTE WELD TO M BARS OR ANCHOR BOLTS.
5. GROUT FOR PRECAST BARRIERS SHALL CONSIST OF TWO PARTS SAND AND ONE PART CEMENT. LATEX ADHESIVE MAY BE ADDED TO THE GROUT IF DIRECTED BY THE ENGINEER. WOOD OR OTHER MATERIAL APPROVED BY THE ENGINEER SHALL BE USED FOR BLOCKING. ENOUGH FIRM BLOCKING MUST BE USED TO PROPERLY ALIGN AND GRADE THE BARRIER SECTIONS. AT OTHER LOCATIONS, ANY SUITABLE MATERIAL MAY BE USED TO RETAIN THE GROUT.
6. JOINTS SHALL BE LOCATED NEAR ENDS OF SPANS, AT ENDS OF LIGHT POLE SECTIONS AND AT INTERVALS IN BETWEEN AS NECESSARY TO MAINTAIN 30 FT. MAXIMUM AND 15 FT. MINIMUM SECTION LENGTHS. WHEN BARRIER IS CAST-IN-PLACE, A JOINT SHALL BE PLACED AT INTERIOR SUPPORTS OF CONTINUOUS UNITS. JOINT OPENINGS SHALL BE 1/2 INCH MINIMUM AND 1 INCH MAXIMUM OR 1/2 INCH WIDER THAN ADJACENT OPEN SLAB JOINTS. MATERIAL USED IN FORMING JOINTS MAY BE LEFT IN PLACE IF IT IS COMPRESSIBLE AND LIGHT IN COLOR. WHERE PORTIONS OF BARRIERS PROJECT OVER ADJACENT SPANS, SIMILAR MATERIALS MAY ALSO BE USED TO PROVIDE 3/4 INCH NOMINAL CLEARANCE.
7. ANCHOR BOLTS AND ASSOCIATED NUTS, WASHERS, AND PLATES FOR THE BARRIER TO SLAB ATTACHMENT SHALL BE GALVANIZED. ANCHOR BOLT ASSEMBLIES SHALL CONFORM TO ITEM 449, MILD STEEL ANCHOR BOLTS OR A36 THREADED ROD WITH TACK WELDED NUTS (0.906 INCH MIN. DIA. WITH ROLLED THREADS). DRILLED ANCHORAGE HOLES SHALL BE INSTALLED WITH ROTARY TYPE EQUIPMENT; PERCUSSION DRILLING DISALLOWED. SPALLS IN THE BOTTOM OF THE SLAB EXCEEDING 1/2" FROM THE EDGE OF THE HOLE SHALL BE PATCHED.
8. THE CENTERLINE AXIS OF THE BARRIER SHALL BE VERTICAL EXCEPT WHERE THE SLAB IS SUPERELEVATED IN WHICH CASE IT SHALL BE NORMAL TO THE CROSS SLOPE UNLESS OTHERWISE SHOWN IN THE PLANS OR DIRECTED BY THE ENGINEER.
9. THE MAXIMUM OFFSET FROM THE CENTER OF THE BARRIER TO THE TRUE CIRCULAR CENTERLINE SHALL BE ONE INCH FOR PRECAST SEGMENTS INSTALLED ON HORIZONTAL CURVES. IF THIS WOULD REQUIRE SEGMENT LENGTHS OF LESS THAN 15 FEET, THEN THE BARRIER SHALL BE CAST-IN-PLACE TO THE CORRECT RADIUS.
10. SHOP DRAWINGS ARE NOT REQUIRED FOR THIS BARRIER.
11. ANCHORAGE SYSTEMS EQUAL TO OR STRONGER THAN THOSE SHOWN MAY BE USED PROVIDED THE DETAILS OF SUCH SYSTEMS ARE SUBMITTED TO AND APPROVED BY THE ENGINEER PRIOR TO PLACEMENT.

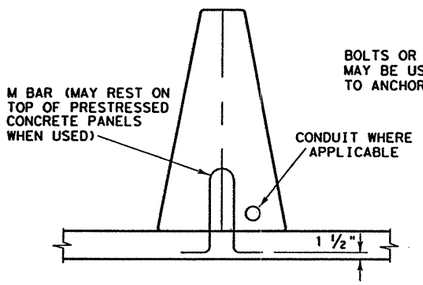

CAST-IN-PLACE ON NEW SLABS

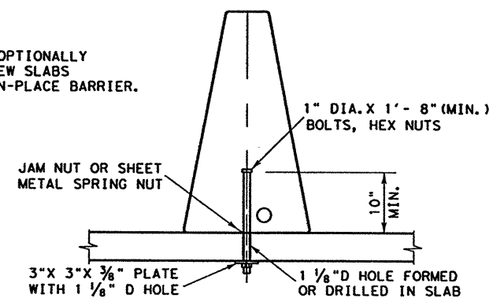

CAST-IN-PLACE ON NEW OR EXISTING SLABS

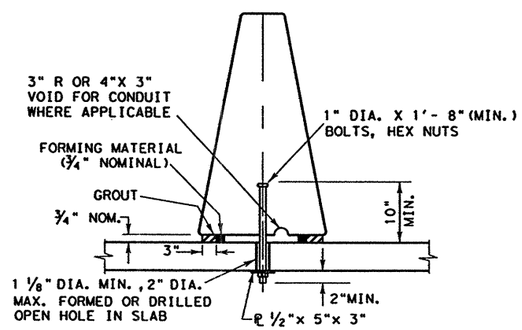

PRECAST ON NEW OR EXISTING SLABS

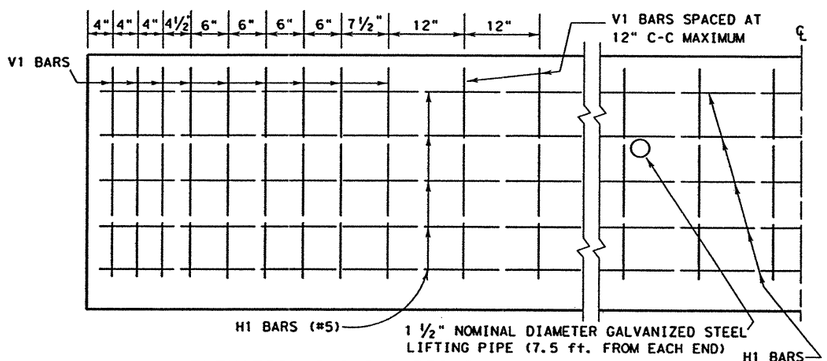

ELEVATION SHOWING REINFORCING FOR PRECAST

(SYMMETRICAL ABOUT BARRIER MIDPOINT)

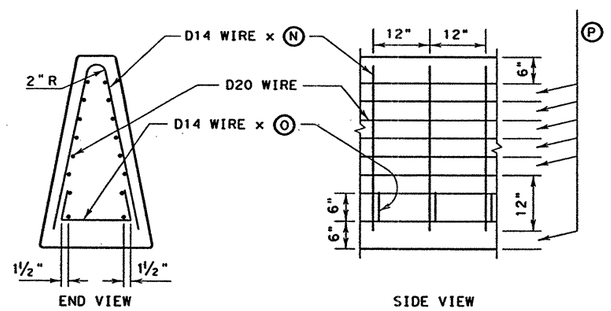

WELDED WIRE FABRIC OPTIONAL REINFORCING

(PRECAST OR CAST-IN-PLACE)

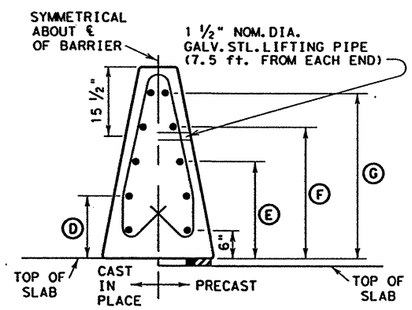

TYPICAL SECTION

(CONVENTIONAL REINFORCING)

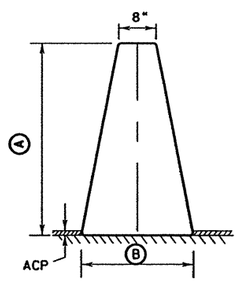

TYPICAL SECTION

(GEOMETRICS)

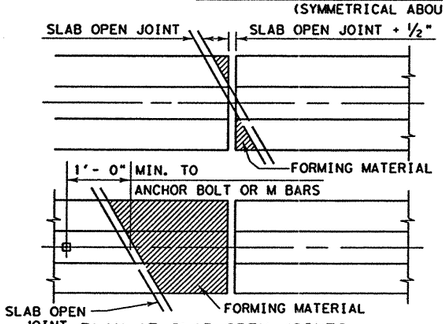

PLAN AT SLAB OPEN JOINTS

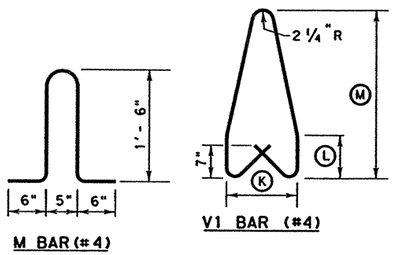

REINFORCING DETAILS

BARRIER HEIGHT (IN.)	DIMENSIONS (IN.)															
	(A)	(B)	(C)	(D)	(E)	(F)	(G)	(H)	(I)	(J)	(K)	(L)	(M)	(N)	(O)	(P)
42	42	24	33 1/2	13 1/2	21	28 1/2	36	15	9 1/4	33 1/4	15	9 1/4	36	72	28	4
48	48	26 9/32	39 1/2	15	24	33	42	17 1/4	10 3/4	39 1/4	17 1/4	10 3/4	42	84	31 1/2	5
54	54	28 9/16	45 1/2	16 1/2	27	37 1/2	48	19 1/2	12 1/4	45 1/4	19 1/2	12 1/4	48	96	34 3/4	6

R = Radius
D = Diameter

Texas Department of Transportation
Design Division (Roadway)

SINGLE SLOPE CONCRETE BARRIER

TYPE 1

(BRIDGE)

SSCB(1)-99

FILE: ~~sscb199.dgn~~	DN: GTH	CK: GTH	DW: BGD	CK:
©TxDOT MAY 1992	DIST 22	FED REG 6	FEDERAL AID PROJECT NH-2002 (79)	SHEET 681
REVISIONS	COUNTY	CONTROL	SECT	JOB	HIGHWAY

DISCLAIMER:
The use of this standard is governed by the "Texas Engineering Practice Act". No warranty of any kind is made by TxDOT for any purpose whatsoever. TxDOT assumes no responsibility for the conversion of this standard to other formats or for incorrect results or damages resulting from its use.

LEVELS

HOUFILE023 \hcivil\cf0130\ 4/18/2003
34mod44.dgn-01

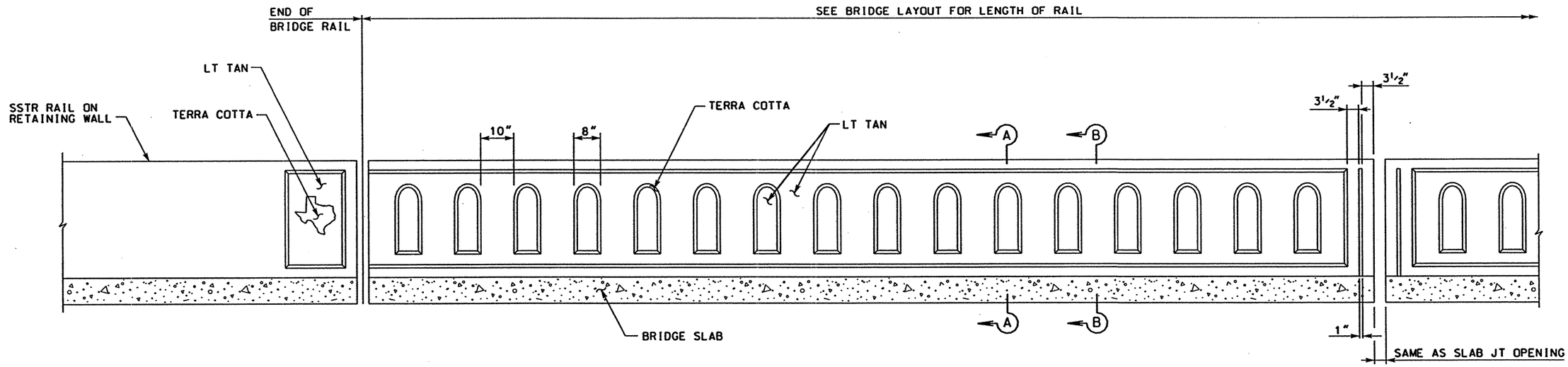

ELEVATION OF RAIL

SCALE: ⅜" = 1'-0"

NOTE: FORMLINERS ~~SHALL BE~~ APPROVED BY THE ENGINEER PRIOR TO CONTRACTOR'S USE.

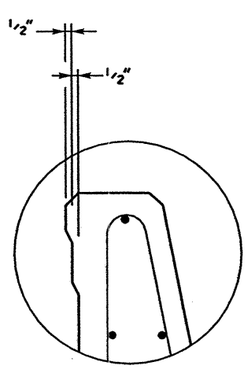

INSET

NTS

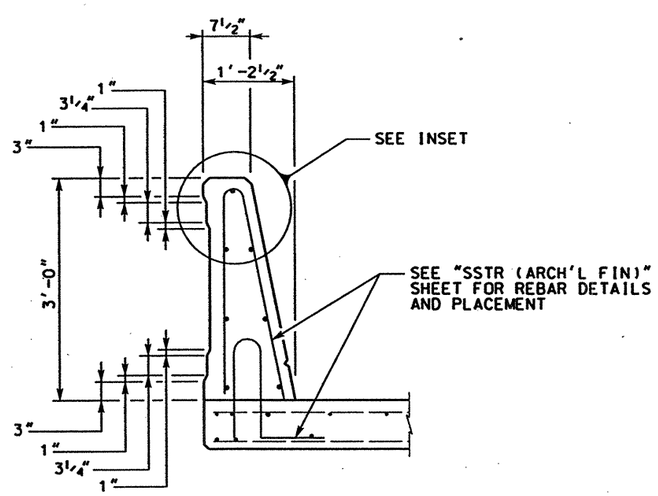

SECTION A-A

SCALE: ½" = 1'-0"

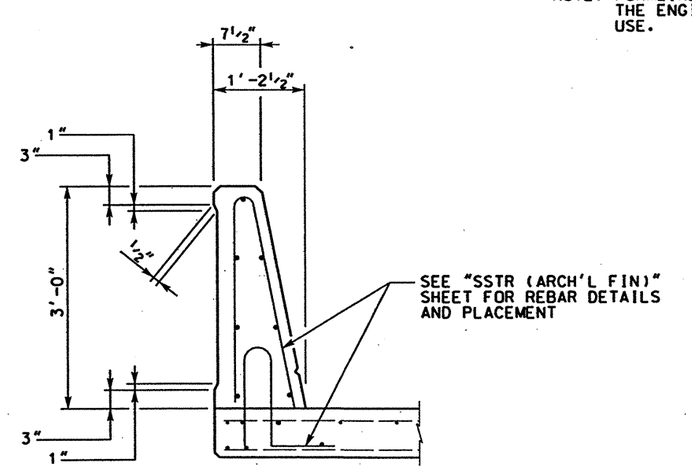

SECTION B-B

SCALE: ½" = 1'-0"

STATE OF TEXAS
JAMES B. HORNSBY
81485
REGISTERED PROFESSIONAL ENGINEER

THE SEAL APPEARING ON THIS DOCUMENT WAS AUTHORIZED BY JAMES B. HORNSBY PE 81485, ON APRIL 18, 2003

KBR

Engineered by KBR Technical Services, Inc

©2003 Texas Department of Transportation

IH 35
LOOP 20 TO UNIROYAL ROAD

FORM LINER DETAIL (RAIL)

SHEET 1 OF 1

FED RD DIV NO	FEDERAL AID PROJECT NO		SHEET NO
6	NH-2002 (79)		682.
STATE	STATE DIST		COUNTY
TEXAS	LAREDO		WEBB
CONT	SECT	JOB	HIGHWAY NO
0018	05	062, ETC	IH 35

REF FILE(S): J01lop01.bdr, bdr LV ON = 48,57,58,60-62

b70sdp09.dgn-05 HOUFILE023 \hctivil\cf0130\ 4/18/2003

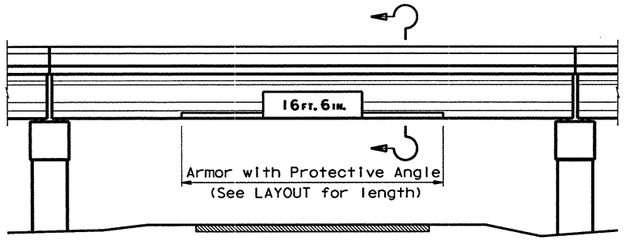

TYPICAL BRIDGE ELEVATION

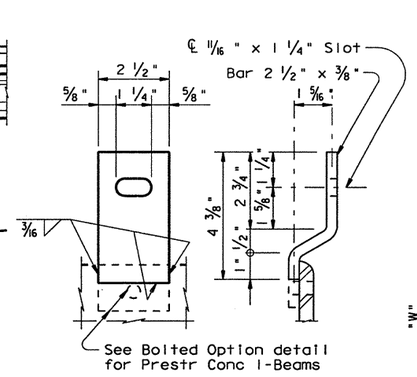

40' CG (PAN FORM) SPANS

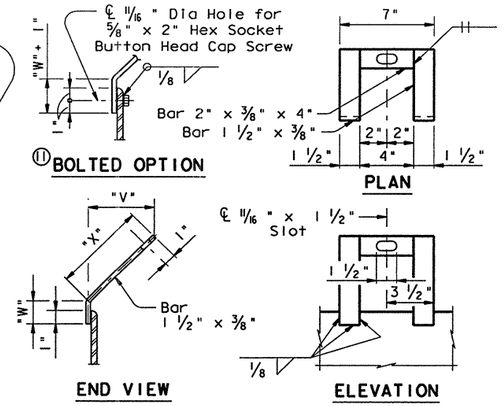

PRESTRESSED CONCRETE BEAMS

PROTECTIVE ANGLE SUPPORT BRACKETS

BEAM	"V"	(11) "W"	"X"	"Y"	"Z"
TYPE A	4 7/16"	1 5/16"	6 5/16"	2 9/16"	3 5/8"
TYPE B	5 1/2"	2 5/16"	7 13/16"	2 1/4"	3 3/16"
TYPE C	7 5/16"	1 5/16"	10 5/16"	2 1/4"	3 3/16"
TYPE 54	4 3/4"	2 5/16"	6 3/4"	2 1/4"	3 3/16"
TYPE 72	7 5/16"	5 5/16"	10 5/16"	2 1/4"	3 3/16"
TYPE IV	4 13/16"	2 5/16"	6 13/16"	6 1/4"	8 13/16"

BOX BEAM	"V"	(11) "W"	"X"	"Y"	"Z"
20	4 7/16"	1 5/16"	5 3/4"	1 15/16"	2 3/4"
28	4 7/16"	1 5/16"	6 5/16"	2 9/16"	3 5/8"
34	4 7/16"	5 5/16"	6 5/16"	2 9/16"	3 5/8"
40	4 7/16"	11 5/16"	6 5/16"	2 9/16"	3 5/8"

(11) Add 1" to "W" dimension when "BOLTED OPTION" is used. Notch Redwood Plank to accomodate bolt and nut.

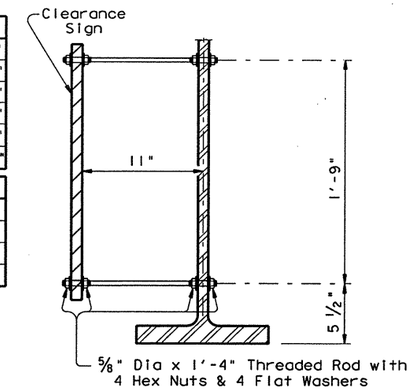

CLEARANCE SIGN MOUNTING BOLTS

STEEL GIRDER & I-BEAM UNITS

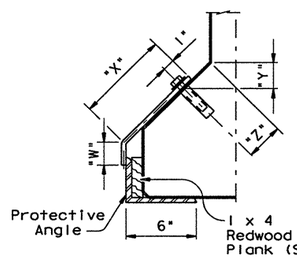

TYPE A & B BEAMS & 20" & 28" BOX BEAMS

(SHOWN WITHOUT SIGN)

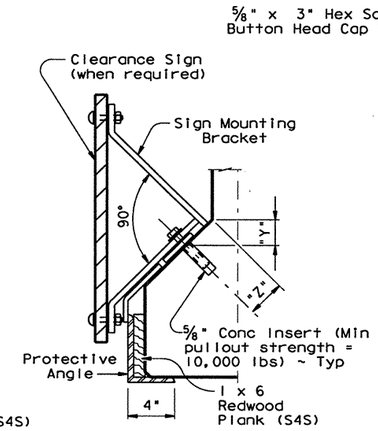

TYPE C, 54, 72, IV BEAMS & 34" & 40" BOX BEAMS

(SHOWN WITH SIGN)

PRESTRESSED CONCRETE BEAMS

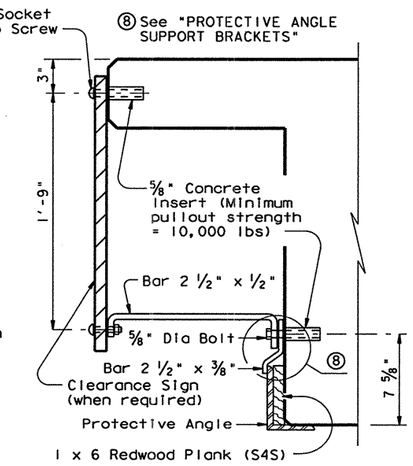

40' CG (PAN FORM) SPANS

(SHOWN WITH SIGN)

SECTIONS THRU BRIDGE ELEVATION

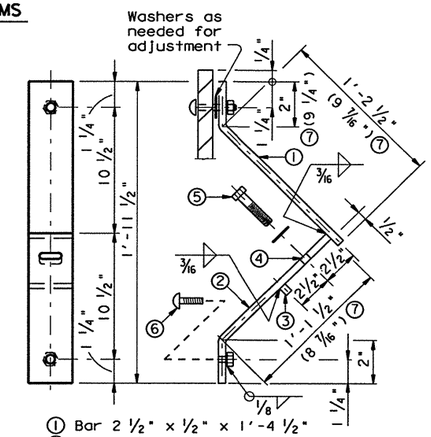

① Bar 2 1/2" x 1/2" x 1'-4 1/2"
② Bar 2 1/2" x 1/2" x 1'-3 1/2"
③ 1/2" x 1/2" x 2 1/2"
④ 11/16" x 1 1/4" Slot
⑤ 5/8" Dia x 3" Bolt with Flat Washer
⑥ 5/8" x 2" Hex Socket Button Head Cap Screw
⑦ For 508 & 711 mm Boxes & Type A Beams only.

PRESTRESSED CONCRETE BEAMS

CLEARANCE SIGN MOUNTING BRACKET

(2 REQUIRED PER SIGN)

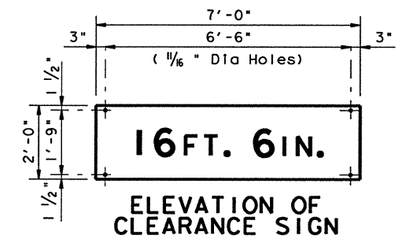

ELEVATION OF CLEARANCE SIGN

GENERAL NOTES:

Designed according to current AASHTO Standard Specifications.

Protective Angles and Support Brackets shall be Structural Steel conforming to ASTM designation A36, A572 or A588 and may be shipped in convenient lengths (11'-0" Min).

Redwood Planks shall be beveled to clear inside radius of Protective Angle and shall be full length of angle. Joints in plank shall not coincide with joints in angle.

Either clearance signs, protective angles or both together may be installed using these details. For clearance signs these details are appropriate for skew angles up to 30°. For protective angles these details are appropriate for any skew.

Plans may require the complete assembly, consisting of protective angle and mounting brackets, sign and sign mounting brackets, or may require only portions of this assembly, all as noted on the structure Layout sheet

For clearance sign details in excess of 30°, include BPA-2.

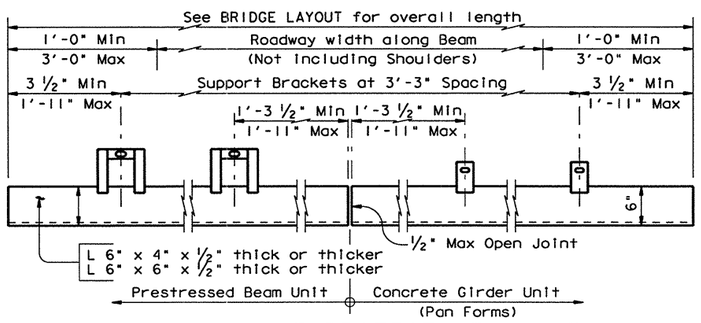

ELEVATION OF PROTECTIVE ANGLE

See Prestressed Concrete Beam Sections.
"V", "W" & "X" Dimensions may need adjusting for thicker Protective Angles.

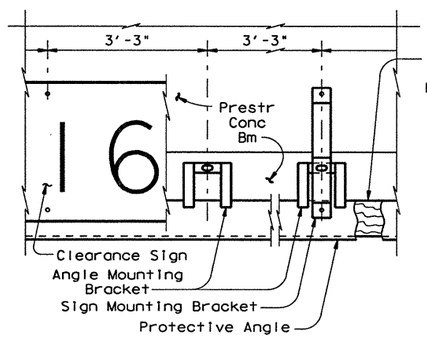

TYPICAL INSTALLATION OF CLEARANCE SIGN AND PROTECTIVE ANGLE

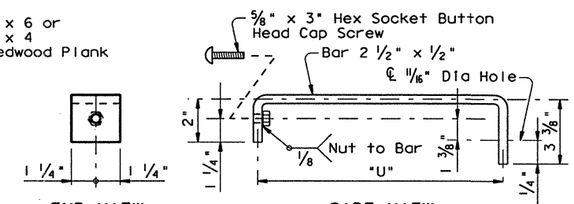

OVERHANG	9 1/4"	1'-3 1/4"	1'-9 1/4"	7 3/4"
"U"	8 3/8"	1'-2 3/8"	1'-8 3/8"	6 7/8"

NOTE: If Overhang is 1 3/4" or less, omit Bracket, space with washers as necessary, re-position upper anchors and/or holes in sign.

40' CG (PAN FORM) SPANS

CLEARANCE SIGN MOUNTING BRACKET

(2 REQUIRED PER SIGN)

DISCLAIMER:
Act": The use of this standard is governed by the "Texas Engineering Practice
No warranty of any kind is made by TxDOT for any purpose whatsoever.
TxDOT assumes no responsibility for the conversion of this standard to
other formats or for incorrect results or damages resulting from its use.

LEVELS DISPLAYED — ACC: (LV=1,2 for English)

Texas Department of Transportation
Design Division (Bridge)

BRIDGE PROTECTIVE ASSEMBLY
WITH SIGN MOUNT BRACKET FOR SKEWS THRU 30°
BPA-1

FILE: bpa13ed.dgn	DN: THD	CK: THD	DW: DRG	CK: LDS	STD: BI13A
©TxDOT September 1998	DIST	FED REG	FEDERAL AID PROJECT		SHEET
REVISIONS	22	6	NH-2002 (79)		682A

COUNTY	CONTROL	SECT	JOB	HIGHWAY
WEBB	0018	05	062, ETC	IH 35

b34mp187.dgn-02 HOUFILE023 \hcivil\cf0130\ 6/4/2003

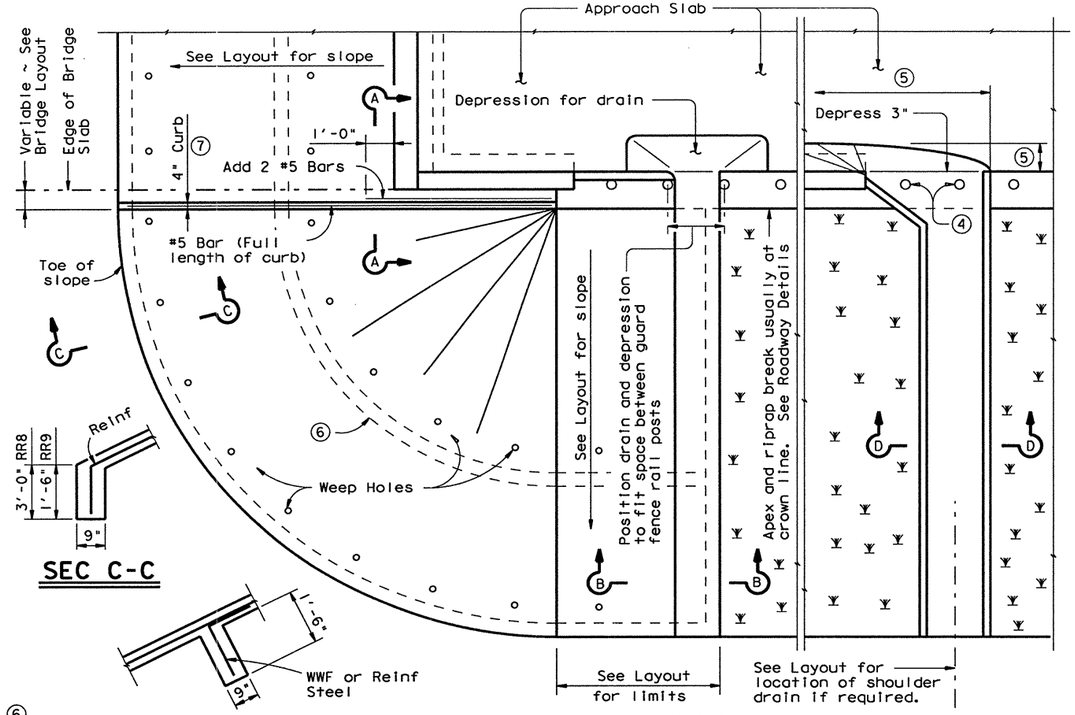

PLAN

SEC C-C

⑥ OPTIONAL INTERMEDIATE TOEWALL

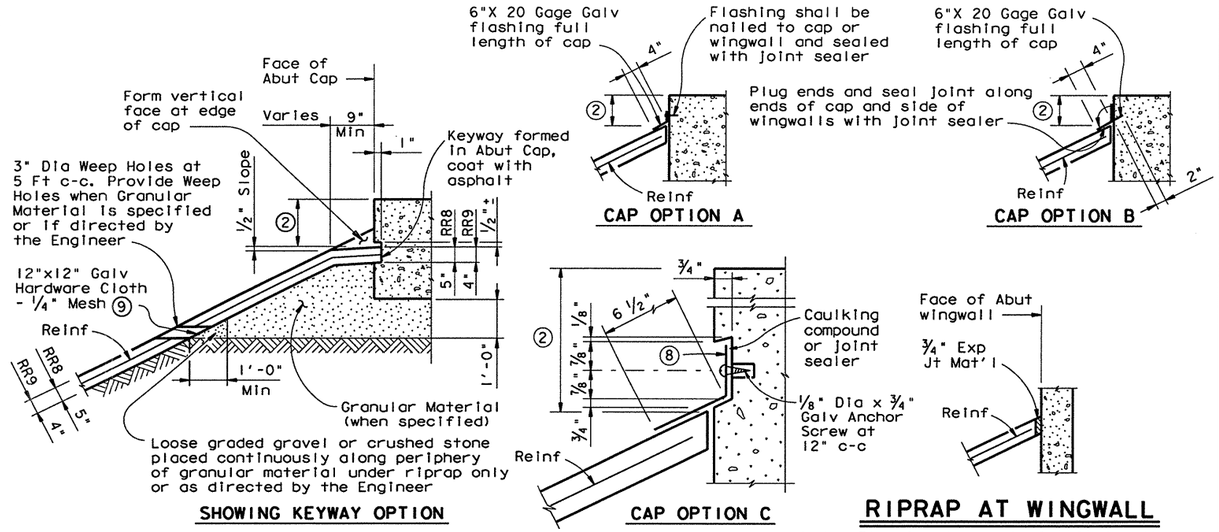

SECTION THRU RIPRAP AT CAP

Note: The sealing option of the joint between the face of cap and riprap shall be as designated by the Engineer or as shown elsewhere on plans.

Note: Flashing (shown in Cap Option A) may be used at wingwall in addition to Exp Jt Mat'l if shown on plans or directed by the Engineer.

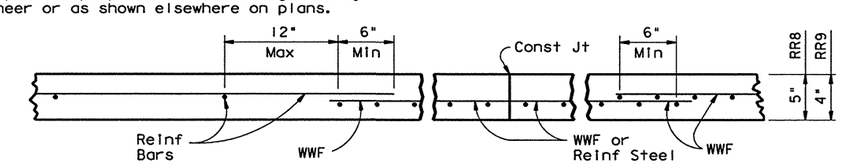

Note: Reinforcing bars shall be #3 at 18" spac c-c. Welded wire fabric shall be 6X6-W2.9XW2.9. Combinations of WWF and reinforcing bars may be used if both are permitted. Lap splices shall be a minimum of 6 inches, measured from the transverse wire of WWF, and the ends of reinforcing bars.

DETAILS OF WWF, REINF AND CONST JOINT

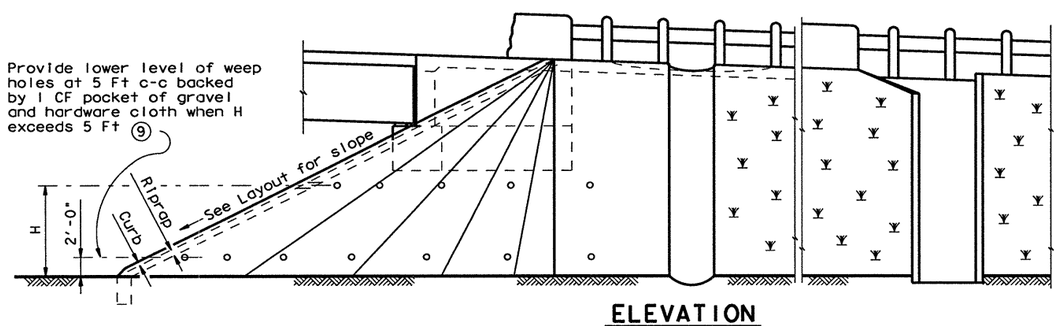

ELEVATION

① Wall extension may be reduced or modified if approved by the Engineer. Wall extension shall be increased to 1'-6" whenever the optional intermediate Toewall is called for in the plans.

② Top of cap to top of riprap dimension varies as directed by the Engineer. Should be 9" Min for stringer type bridges and 1'-6" for slab type bridges.

③ Wider or other drain configurations shall be used if shown elsewhere in plans or if directed by the Engineer.

④ A 12 in. Dia void should be provided in the riprap at the guard fence location. Backfill with 4 in. of ACP if directed by the Engineer.

⑤ Limits and configuration of drains and depressions shall be as shown elsewhere in plans or as directed by the Engineer.

⑥ The optional intermediate toe wall shall be constructed when designated elsewhere in the plans or included in the specifications.

⑦ When riprap is shown extended around header on layout, extend slab and toewall as shown and eliminate 4" curb.

⑧ 8" x 18 Gage Galv Sheet Metal

⑨ If erodable soils occur in the embankment

FOR CONTRACTOR'S INFORMATION ONLY:
5" of RR8 = 0.015 CY/SF
4" of RR9 = 0.012 CY/SF
#3 Reinf at 18" c-c = 0.501 Lbs/SF
6X6-W2.9XW2.9 = 0.394 Lbs/SF

GENERAL NOTES

Concrete shall be Class B unless noted elsewhere in plans.

Reinforcing other than that shown may be used by substituting reinforcement of equal or greater unit cross-sectional area. The Maximum reinforcement spacing shall be 18 inches.

Construction joints or grooved joints extending the full slant slope height shall be at intervals of approximately 20 feet unless otherwise directed by the Engineer.

Porus Concrete Filter Blanket and Gravel Backfill shall be placed if shown elsewhere in the plans or if directed by the Engineer.

Hardware cloth, loose graded stone behind weep holes, flashing, or other sealing material shall not be paid for directly but shall be subsidiary to the bid item, Riprap.

Unless specified elsewhere in the plans to be only reinforcing bars, the riprap reinforcing may be composed of reinforcing bars, welded wire fabric, or any suitable combination of both types.

See Layout for limits of riprap.

RR8 is to be used on stream crossings.

RR9 is to be used on other embankments.

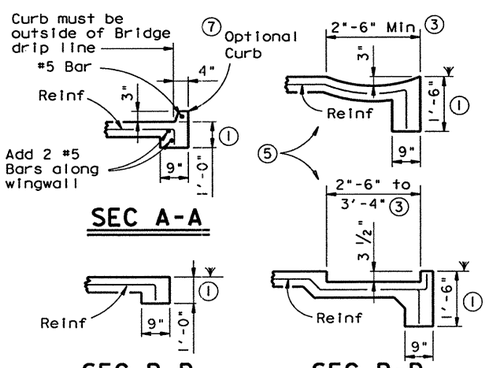

SEC A-A

SEC B-B (No Drain)

SEC B-B (With Drain)

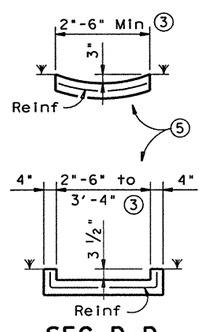

SEC D-D (Shoulder Drain)

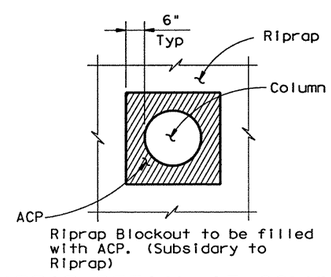

RIPRAP DETAIL AT COLUMNS (As directed by the Engineer)

Texas Department of Transportation
Design Division (Bridge)

CONCRETE RIPRAP
FOR EMBANKMENT SLOPES UNDER BRIDGE ENDS (TYPES RR8 & RR9)

CRR

FILE: cr_slide1.dgn	DN: JJP	CK: THD	DW: DRG	CK: LDS	NEG: B202
© TxDOT September 1998	DIST	FED REG	FEDERAL AID PROJECT		SHEET
REVISIONS	22	6	NH-2002 (79)		682B
	COUNTY		CONTROL	SECT	JOB	HIGHWAY
	WEBB		0018	05	062, ETC	IH 35

DISCLAIMER:
The use of this standard is governed by the "Texas Engineering Practice Act". No warranty of any kind is made by TxDOT for any purpose whatsoever. TxDOT assumes no responsibility for the conversion of this standard to other formats or for incorrect results or damages resulting from its use.

LEVELS DISPLAYED: 1 2 3 4 5 6 7 8 9 10 11 12 13 14 15 16 17 18 19 20 21 22 23 24 25 26 27 28 29 30 31 32 33 34 35 36 37 38 39 40 41 42 43 44 45 46 47 48 49 50 51 52 53 54 55 56 57 58 59 60 61 62 63
ACC: (LV=1.2 for English)

d:34mp186.dgn 02 HOUFILE023 \hcivil\cf0130\ 6/4/2003

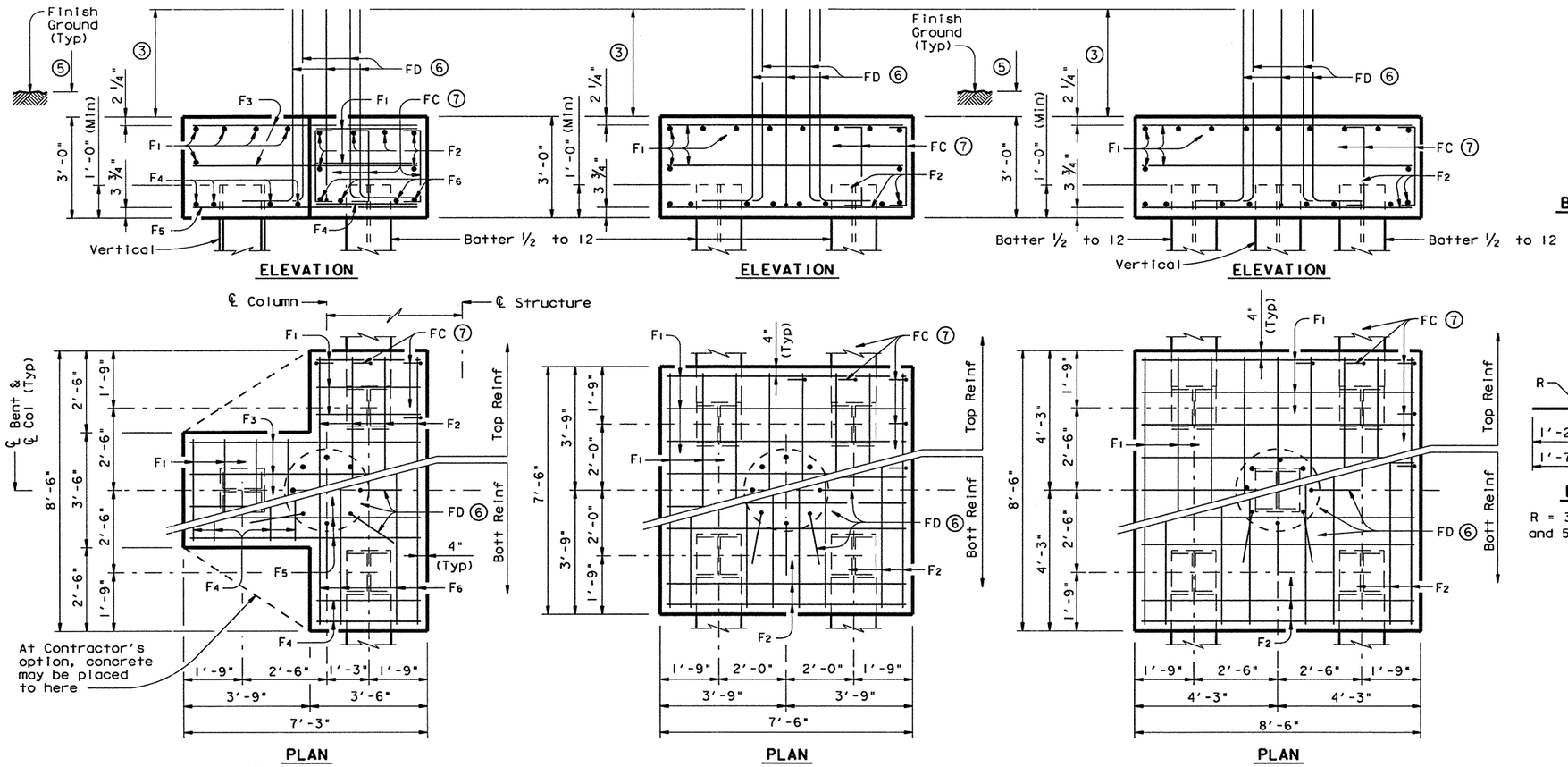

THREE PILE FOOTING

FOUR PILE FOOTING

FIVE PILE FOOTING

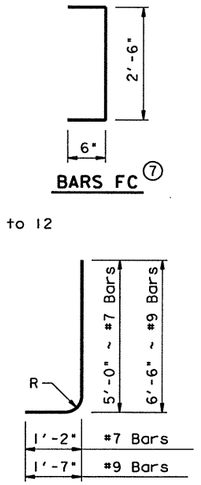

TABLE OF FOOTING QUANTITIES FOR 30" COLUMNS

Bar	No.	Size	Length	Weight
ONE 3 PILE FOOTING				
F1	13	# 4	3'- 2"	27
F2	6	# 4	8'- 2"	33
F3	6	# 4	6'-11"	28
F4	8	# 9	3'- 2"	86
F5	4	# 9	6'-11"	94
F6	4	# 9	8'- 2"	111
FC	20	# 4	3'- 6"	47
⑧ FD	8	# 9	7'-11"	215
Reinforcing Steel			Lb	641
Class "C" Concrete			CY	4.8
ONE 4 PILE FOOTING				
Bar	No.	Size	Length	Weight
F1	20	# 4	7'- 2"	96
F2	16	# 8	7'- 2"	306
FC	20	# 4	3'- 6"	47
⑧ FD	8	# 9	7'-11"	215
Reinforcing Steel			Lb	664
Class "C" Concrete			CY	6.3
ONE 5 PILE FOOTING				
Bar	No.	Size	Length	Weight
F1	22	# 4	8'- 2"	120
F2	16	# 9	8'- 2"	444
FC	22	# 4	3'- 6"	51
⑧ FD	8	# 9	7'-11"	215
Reinforcing Steel			Lb	830
Class "C" Concrete			CY	8.0

⑧ For 24" Cols, use #7 FD bars (6'-1") in place of #9 bars and deduct 116 lbs.
For 36" Cols, add 2 FD bars (54 lbs).

① #3 Spiral at 6" pitch (One flat turn top & bottom)

② Min extension into Abutment Wingwalls = 1'-0"
Min extension into Abutment Caps ~ 24" Dia = 1'-5"
30" Dia and 36" Dia = 2'-3"

③ Min lap with Column reinf:
#7 Bars = 2'-4"
#9 Bars = 3'-10"
Note: Number and size of Col reinf must match FD bars

④ Or as shown on plans

⑤ 6" (Min) at Grade Crossing 1'-0" (Min) in Channel

⑥ FD bars shall be tied to the top of the bottom mat of reinforcing

⑦ FC bar spacing = 18"±

GENERAL NOTES:

Designed according to current AASHTO Standard Specifications for Highway Bridges.

See Bridge Layout of each Structure for Foundation Type to be used.

Details shown on this standard to be used unless shown otherwise in the plans.

Maximum Pile Load for the footings shown shall be as follows : 72 Tons/Pile with 24" Dia Column
80 Tons/Pile with 30" Dia Column
100 Tons/Pile with 36" Dia Column

Standard Footings shall not be used in salt water conditions.

Drilled Shaft reinforcing may be Grade 40.

Piling under wings to be driven to a minimum resistance of 10 Tons.

HS20 LOADING

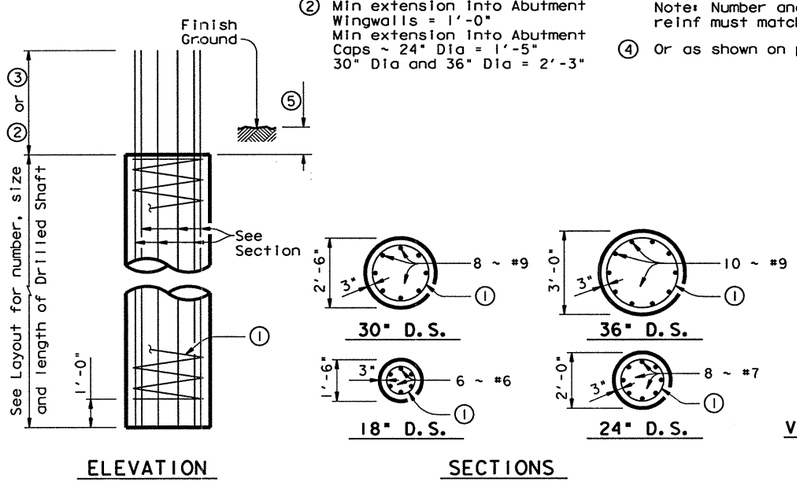

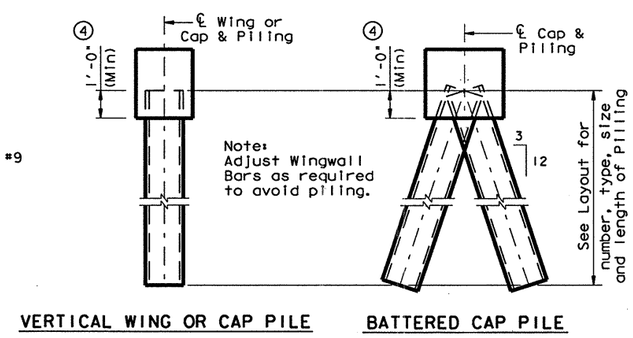

PILING DETAILS
(Concrete or Steel H)

ABUTMENT, WINGWALL, AND INTERIOR BENT DRILLED SHAFTS

DISCLAIMER:
The use of this standard is governed by the "Texas Engineering Practice Act". No warranty of any kind is made by TxDOT for any purpose whatsoever. TxDOT assumes no responsibility for the conversion of this standard to other formats or for incorrect results or damages resulting from its use.

LEVELS DISPLAYED
1 2 3 4 5 6 7 8 9 10 11 12 31 41 51 61
17 18 19 20 21 22 23 24 25 26 27 28 29 30 31 32
33 34 35 36 37 38 39 40 41 42 43 44 45 46 47 48
49 50 51 52 53 54 55 56 57 58 59 60 61 62 63
ACC:
(LV=1,2 for English)

6/4/2003

HOUFILE023 \hcivil\cf0130\

b34mo188.dgn-02

Texas Department of Transportation
Design Division (Bridge)

COMMON FOUNDATION DETAILS

FD

FILE: fdstde01.dgn	DN: JMH	CK: DWM	DW: RNP	CK: JMH	STD: B205
©TxDOT September 1998	DIST	FED REG	FEDERAL AID PROJECT		SHEET
REVISIONS	22	6	NH-2002 (79)		682C
	COUNTY		CONTROL	SECT	JOB	HIGHWAY
	WEBB		0018	05	062, ETC	IH 35

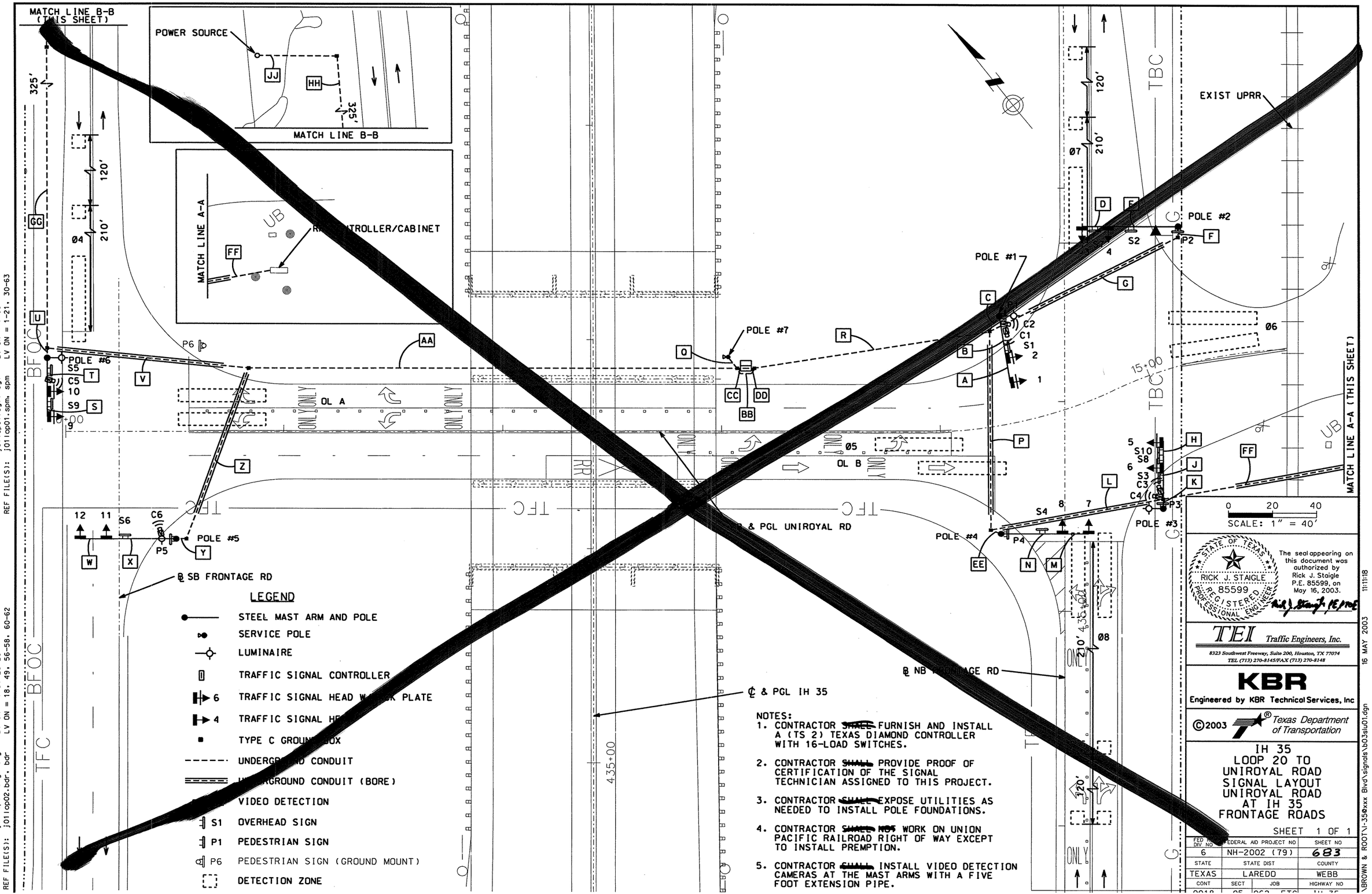
MATCH LINE B-B (THIS SHEET)
POWER SOURCE
JJ
HH
325'
MATCH LINE B-B
MATCH LINE A-A
FF
UB
CONTROLLER/CABINET
EXIST UPRR
POLE #1
POLE #2
POLE #3
POLE #4
POLE #5
POLE #6
POLE #7
OL A
OL B
ONLY
TFC
TBC
BFOC
RR
℄ & PGL UNIROYAL RD
℄ SB FRONTAGE RD
℄ NB FRONTAGE RD
℄ & PGL IH 35
435+00
15+00
120'
210'
Ø4
Ø5
Ø6
Ø7
Ø8
SCALE: 1" = 40'
0 20 40
LEGEND
STEEL MAST ARM AND POLE
SERVICE POLE
LUMINAIRE
TRAFFIC SIGNAL CONTROLLER
TRAFFIC SIGNAL HEAD WITH BACK PLATE
TRAFFIC SIGNAL HEAD
TYPE C GROUND BOX
UNDERGROUND CONDUIT
UNDERGROUND CONDUIT (BORE)
VIDEO DETECTION
S1 OVERHEAD SIGN
P1 PEDESTRIAN SIGN
P6 PEDESTRIAN SIGN (GROUND MOUNT)
DETECTION ZONE
NOTES:
1. CONTRACTOR ~~SHALL~~ FURNISH AND INSTALL A (TS 2) TEXAS DIAMOND CONTROLLER WITH 16-LOAD SWITCHES.
2. CONTRACTOR ~~SHALL~~ PROVIDE PROOF OF CERTIFICATION OF THE SIGNAL TECHNICIAN ASSIGNED TO THIS PROJECT.
3. CONTRACTOR ~~SHALL~~ EXPOSE UTILITIES AS NEEDED TO INSTALL POLE FOUNDATIONS.
4. CONTRACTOR ~~SHALL NOT~~ WORK ON UNION PACIFIC RAILROAD RIGHT OF WAY EXCEPT TO INSTALL PREMPTION.
5. CONTRACTOR ~~SHALL~~ INSTALL VIDEO DETECTION CAMERAS AT THE MAST ARMS WITH A FIVE FOOT EXTENSION PIPE.
STATE OF TEXAS
RICK J. STAIGLE
85599
REGISTERED PROFESSIONAL ENGINEER
The seal appearing on this document was authorized by Rick J. Staigle P.E. 85599, on May 16, 2003.
TEI Traffic Engineers, Inc.
8323 Southwest Freeway, Suite 200, Houston, TX 77074
TEL (713) 270-8145/FAX (713) 270-8148
KBR
Engineered by KBR Technical Services, Inc
©2003 Texas Department of Transportation
IH 35
LOOP 20 TO
UNIROYAL ROAD
SIGNAL LAYOUT
UNIROYAL ROAD
AT IH 35
FRONTAGE ROADS
SHEET 1 OF 1
FED RD DIV NO 6
FEDERAL AID PROJECT NO NH-2002 (79)
SHEET NO 683
STATE TEXAS
STATE DIST LAREDO
COUNTY WEBB
CONT
SECT
JOB
HIGHWAY NO
16 MAY 2003
11:11:18
\BROWN & ROOT\I-35@xxx Blvd\signals\b03slu01.dgn
REF FILE(S): j99lor01.row, row LV ON = 1-63
j01lop01.sgl, sgl LV ON = 1-63
j01lop01.spm, spm LV ON = 1-21, 30-63
REF FILE(S): j01lop01.bnt, bnt LV ON = 1-63
j01lop01.uti, uti LV ON = 1-63
j01lop01.eop, eop LV ON = 1-5, 7-13, 15-17, 19-63
j01lop01.bck, bck LV ON = 10
j01lop01.alg, alg LV ON = 1-6, 25-29
j01lop02.bdr, bdr LV ON = 18, 49, 56-58, 60-62

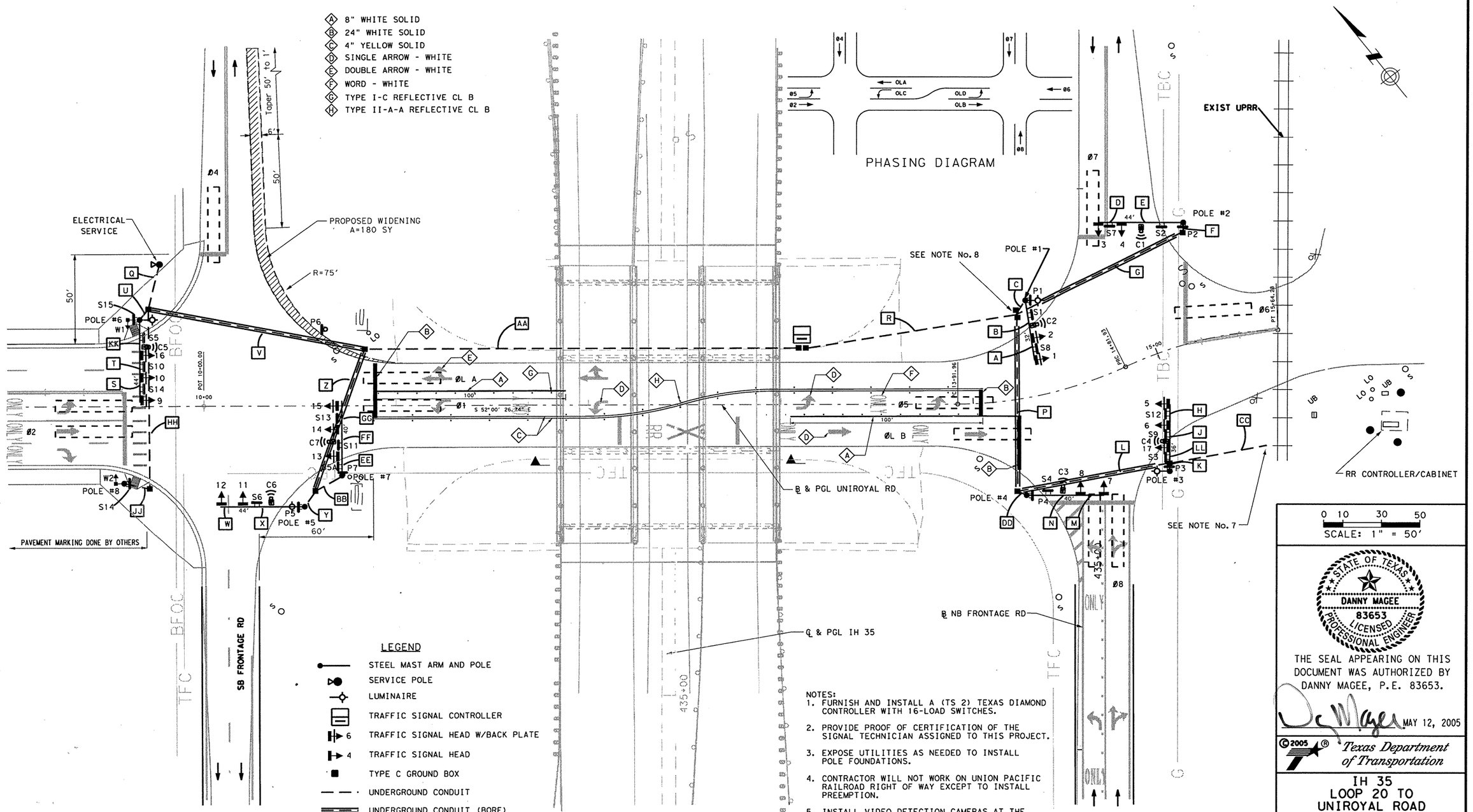

LEGEND

- STEEL MAST ARM AND POLE
- SERVICE POLE
- LUMINAIRE
- TRAFFIC SIGNAL CONTROLLER
- 6 TRAFFIC SIGNAL HEAD W/BACK PLATE
- 4 TRAFFIC SIGNAL HEAD
- TYPE C GROUND BOX
- UNDERGROUND CONDUIT
- UNDERGROUND CONDUIT (BORE)
- C2 VIDEO DETECTION
- S1 OVERHEAD SIGN
- P1 PEDESTRIAN SIGN
- P6 PEDESTRIAN SIGN (GROUND MOUNT)
- DETECTION ZONE
- PEDESTRIAN SIGNAL HEAD W/PUSHBUTTON & SIGN

NOTES:

1. FURNISH AND INSTALL A (TS 2) TEXAS DIAMOND CONTROLLER WITH 16-LOAD SWITCHES.
2. PROVIDE PROOF OF CERTIFICATION OF THE SIGNAL TECHNICIAN ASSIGNED TO THIS PROJECT.
3. EXPOSE UTILITIES AS NEEDED TO INSTALL POLE FOUNDATIONS.
4. CONTRACTOR WILL NOT WORK ON UNION PACIFIC RAILROAD RIGHT OF WAY EXCEPT TO INSTALL PREEMPTION.
5. INSTALL VIDEO DETECTION CAMERAS AT THE MAST ARMS WITH A FIVE FOOT EXTENSION PIPE.
6. PLACEMENT OF VIVDS DETECTION CAMERAS ARE APPROXIMATE. THE EXACT LOCATIONS WILL BE DETERMINED IN THE FIELD BY THE CONTRACTOR IN COORDINATION WITH THE ENGINEER.
7. RAILROAD WILL PROVIDE A CONNECTION TO TXDOT TRAFFIC SIGNAL AT THIS POINT FOR PREEMPTION.
8. PLACE THE 2" CONDUITS IN ONE GROUND BOX. THE 3" CONDUITS AND THE 4" CONDUIT ~~SHALL BE~~ IN THE OTHER GROUND BOX.

0 10 30 50
SCALE: 1" = 50'

STATE OF TEXAS
DANNY MAGEE
83653
LICENSED
PROFESSIONAL ENGINEER

THE SEAL APPEARING ON THIS DOCUMENT WAS AUTHORIZED BY DANNY MAGEE, P.E. 83653.

MAY 12, 2005

© 2005 Texas Department of Transportation

IH 35 LOOP 20 TO UNIROYAL ROAD SIGNAL LAYOUT UNUROYAL ROAD AT IH 35 FRONTAGE ROADS

SHEET 1 OF 3

FED RD DIV NO	FEDERAL AID PROJECT NO		SHEET NO
6	NH-2002 (79)		683
STATE	STATE DIST		COUNTY
TEXAS	LAREDO		WEBB
CONT	SECT	JOB	HIGHWAY NO
0018	05	062, ETC	IH 35

SFTIFS

T:\LRDTROPR\FY-2005\Design\Traffic Signals\Uniroyal & IH 35

FILE NAME: M-Uniroyal Prop.dgn

ELECTRICAL SCHEDULE

ITEM	TOTAL QTY.	RUN NUMBER / RUN LENGTH	A 12'	B 48'	C 10'	D 12'	E 48'	F 5'	G 95'	H 12'	J 44'	K 5'	L 80'	M 12'	N 48'	P 95'	Q 10'	R 110'	S 12'	T 36'	U 5'	V 95'	W 12'	X 52'	Y 5'	Z 85'	AA 225'	BB 10'	CC 5'	DD 5'	EE 5'	FF 115'	GG 325'	HH 325'	JJ 40'
POWER	30'	1/C-#6 Insulated															2												2						
	250'	1/C-#6 Bare			1			1	1			1	1			1	1	1			1	1			1	1	1	1	1	1	1				
	* [illegible]	1/C-#12 (XHHW) Insulated			2							2	2			2	2	2			2	2			2	2	2	2							
SIGNAL CABLE	* 405'	[illegible]-#12											1			1		1												1		1			
	* 348'	5/[illegible]2	1	2			1				1				1					1			1	2											
	* 224'	7/C-[illegible]				1	1			1	1			1	1				1	1															
	* 1815'	9/C-#12			1			1	1			1	1			2		4			1	1			1	2	3		3	4	1				
	* 1990'	3/C-#16			2							2	2			2		4			1	1			2	2	3		3	4					
	* 1990'	BELDEN 8281			2							2	2			2		4			1	1			2	2	3		3	4					
CONDUIT	1210'	2" PVC (TRENCH)			1			1				1					2				1				1		2	1	1				1	1	1
	545'	2" PVC (BORE)							1				1			1						2				1									
		2" RM (EXISTING)																														1			
	140'	3" PVC (TRENCH)			1							1						1			1				1					1					
	355'	3" PVC (BORE)											1			1						1				1									
	345'	4" PVC (TRENCH)																1									1		1	1					

NOTES:
1. *INCLUDES QUANTITY ON SIGN, POLE AND/OR LUMINAIRE OR COILED IN POLE OR GROUND BOX.
2. RUNS O, AA, V, GG & HH ~~SHALL~~ INCLUDE PULL WIRE IN 2" CONDUIT FOR ELECTRICAL SERVICE ~~TO BE~~ INSTALLED BY OTHERS.

TIMING CHART - 4 PHASE DIAMOND OPERATION

PHASE	1	OL A(6+8)	OL B(4+5)	4	5	6	[illegible]	8
STREET		UNIROYAL	UNIROYAL	WEST FR	UNIROYAL	UNIROYAL	EAST FR	EAST FR
DIRECTION		WB	EB	SB	EB LEFT	WB	SB	NB
INITIAL		10	10	10	5	10	5	[illegible]
EXTENSION		1	1	2	1	2	2	[illegible]
MAXIMUM				45	25	45	15	45
YELLOW		3.5	3.5	5.0	3.5	3.5	5.0	5.0
ALL RED		2.5	2.5	1.5	2.5	2.5	1.5	1.5
PED.		N/A	N/A	N/A	N/A	N/A	N/A	N/A
PED. CLEAR		N/A	N/A	N/A	N/A	N/A	N/A	[illegible]
RECALL		OFF	OFF	OFF	OFF	OFF	OFF	[illegible]
MEMORY		OFF	OFF	ON	ON	ON	ON	ON

SIGN DETAILS

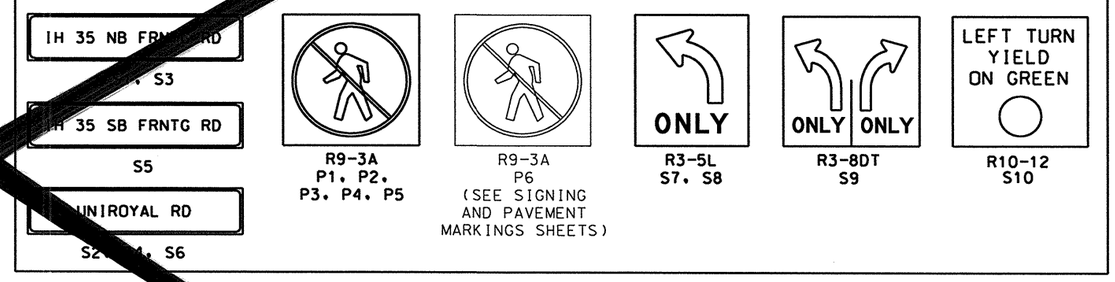

TRAFFIC SIGNAL POLES

POLE NO.	SIGNAL POLE DESIGNATION	MAST ARM DESIGN	FOUNDATION TYPE/DEPTH
1	32L-100	32 II-100	36-A/14
2	44L-100	44 III-100	36-B/16
3	32L-100	32 II-100	36-A/14
4	40L-100	40 III-[illegible]	36-B/16
5	44L-100	44 [illegible]-100	36-B/16
6	28L-100	28 [illegible]-100	36-A/14
7	SERVICE POLE		24-A/6

SIGNAL [illegible] SCHEDULE

NOTES:
1. ALL INDICATIONS SHALL BE LED'S.

ELECTRICAL SERVICE DATA
ITEM 628

Service Pole No.	Sheet No.	Service Pole Description (See ED (4)-00)	Service Conduit Size	Service Conductors No./Size	Safety Switch Amps	Main Disconnect: Switch Amp/Fuse	Main Disconnect: Ckt. Bkr. Pole/Amp	Two-Pole Contactor Amps	Panelbd./Loadcenter Amp Rating (min)	Circuit No.	Branch Ckt. Bkr. Pole/Amps	Branch Circuit Amps	KVA Load
1		TY T (120/240) 000 (NS) GS (L) SP (U)	1½IN	3/#2 AWG	N/A	N/A	N/A	N/A	70	TRAFFIC SIGNAL	1P/50	40.0	5.3
										SAFETY LIGHTING	2P/20	1.9	

NOTE: FOR THE ELECTRICAL SERVICE, THERE SHALL BE: NO LIGHTING CONTACTOR, NO HAND OFF AUTO AND NO ENCLOSED MOUNTED PHOTOCELL.

STATE OF TEXAS
RICK J. STAIGLE
85599
REGISTERED PROFESSIONAL ENGINEER

The seal appearing on this document was authorized by Rick J. Staigle P.E. 85599, on May 16, 2003.

TEI Traffic Engineers, Inc.
8323 Southwest Freeway, Suite 200, Houston, TX 77074
TEL (713) 270-8145/FAX (713) 270-8148

KBR
Engineered by KBR Technical Services, Inc

©2003 Texas Department of Transportation

IH 35
LOOP 20 TO
UNIROYAL ROAD
ELECTRICAL DETAILS
UNIROYAL ROAD
AT IH 35
FRONTAGE ROADS

SHEET 1 OF 1

FED RD DIV NO	FEDERAL AID PROJECT NO	SHEET NO
6	NH-2002 (79)	684
STATE	STATE DIST	COUNTY
TEXAS	LAREDO	WEBB
CONT	SECT / JOB	HIGHWAY NO

REF FILE(S): j01lop02.bdr, bdr LV ON = 18, 49, 56-58, 60-62
BROWN & ROOT\I-35@xxx Blvd\signals\b03slu02.dgn 16 MAY 2003 11:11:33

ELECTRICAL SCHEDULE

ITEM	TOTAL QTY.	RUN NUMBER / RUN LENGTH	A 12′	B 20′	C 10′	D 12′	E 32′	F 5′	G 95′	H 12′	J 12′	K 5′	L 80′	M 13′	N 28′	P 95′	Q 25′	R 110′	S 13′	T 13′	U 7′	V 115′	W 12′	X 32′	Y 10′	Z 80′	AA 225′	BB 16′	CC 50′	DD 5′	EE 13′	FF 12′	GG 13′	HH 95′	JJ 15′	KK 19′	LL 12′
POWER	* 770′	1/C-#4 Insulated															2					2					2										
	* 1193′	1/C-#6 Bare			1			1	1			1	1			1	1	1			1	1			1	1	1	1		1					1	1		
	* 2714′	1/C-#12 (XHHW) Insulated			4							2	2			2	4	2			4	6			2	2	2											
SIGNAL CABLE	* 529′	2/C-#12																			2	1					1							1	1		
	* 896′	3/C-#12											1			1		1			2	1					1		1					1	1		
	* 676′	5/C-#12	1	2		1	2				1			1	2					1			1	2							2	1				2	2
	* 217′	7/C-#12								1	1								1	1											1	1	1			1	1
	* 1946′	9/C-#12			1			1	1			1	1			2		4			1	1			1	2	3	1		1							
	* 2249′	3/C-#16			1		1	1	1			1	1			2		4		1	1	1		1	1	2	3	1		1	1						
	* 2249′	BELDEN 8281			1		1	1	1		1	1	1		1	2		4		1	1	1		1	1	2	3	1		1	1					1	1
CONDUIT	843′	2" PVC (TRENCH)			1			1				1					2	1			1				1		2	1	1	1				1	1		
	580′	2" PVC (BORE)							1				1			1						2				1											
		2" RM (EXISTING)																																			
	488′	3" PVC (TRENCH)			1			1				1						1			1				1		1	1		1				1			
	465′	3" PVC (BORE)							1				1			1						1				1											
	335′	4" PVC (TRENCH)																1									1										

NOTES:
1. * INCLUDES QUANTITY ON SIGNAL POLE AND/OR LUMINAIRE OR COILED IN POLE OR GROUND BOX.

TIMING CHART - 4 PHASE DIAMOND OPERATION

PHASE	1	OL A(6+8)	OL B(4+5)	4	5	6	7	8
STREET	UNIROYAL	UNIROYAL	UNIROYAL	WEST FR	UNIROYAL	UNIROYAL	EAST FR	EAST FR
DIRECTION	WB LEFT	WB	EB	SB	EB LEFT	WB	SB	NB
INITIAL	7	10	10	10	7	10	7	10
EXTENSION	1	1	1	2	1	2	2	2
MAXIMUM	15			45	25	45	15	45
YELLOW	3.5	3.5	3.5	5.0	3.5	3.5	5.0	5.0
ALL RED	2.5	2.5	2.5	1.5	2.5	2.5	1.5	1.5
PED.	N/A	N/A	N/A	N/A	N/A	N/A	N/A	N/A
PED. CLEAR	N/A	N/A	N/A	N/A	N/A	N/A	N/A	N/A
RECALL	OFF	OFF	OFF	OFF	OFF	OFF	OFF	OFF
MEMORY	OFF	OFF	OFF	ON	ON	ON	ON	ON

SIGNAL HEAD SCHEDULE

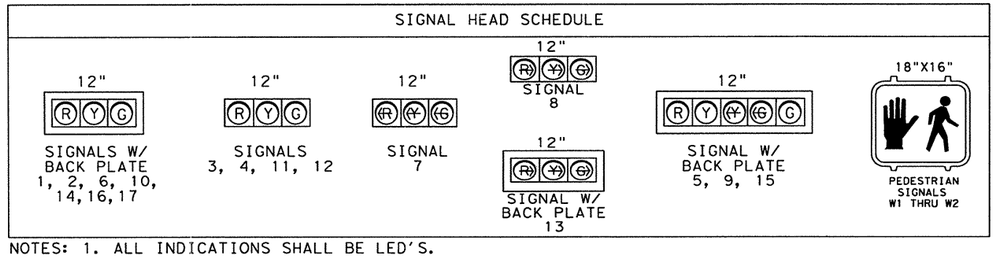

NOTES: 1. ALL INDICATIONS SHALL BE LED'S.

TRAFFIC SIGNAL POLES

POLE NO.	SIGNAL POLE DESIGNATION	MAST ARM DESIGN	FOUNDATION TYPE/DEPTH
1	32L-100	32 II-100	36-A/12
2	44-100	44 III-100	36-B/13.6
3	36L-100	36 II-100	36-A/12
4	40-100	40 III-100	36-B/13.6
5	44L-100	44 III-100	36-B/13.6
6	44L-100	44 III-100	36-B/13.6
7	40-100	40 III-100	36-B/13.6
8	PED POLE		25-A/5.3

SIGN DETAILS

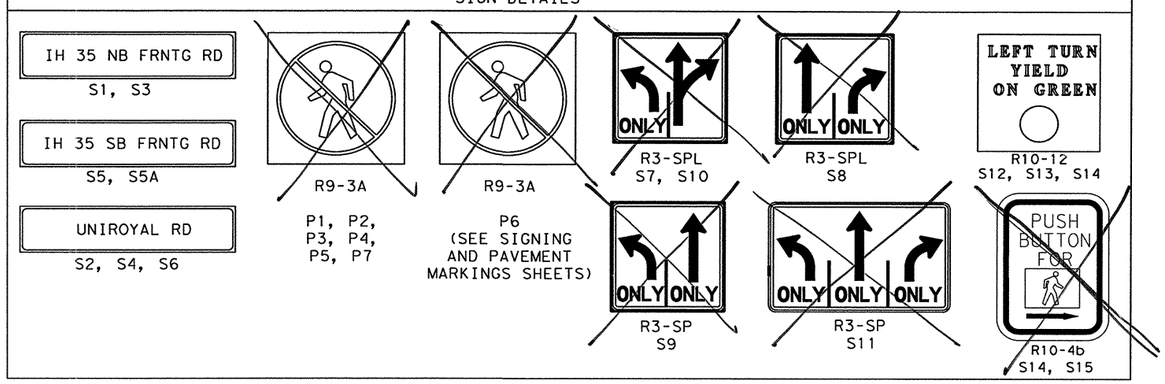

PROPOSED SPACING FOR VIDEO DETECTION

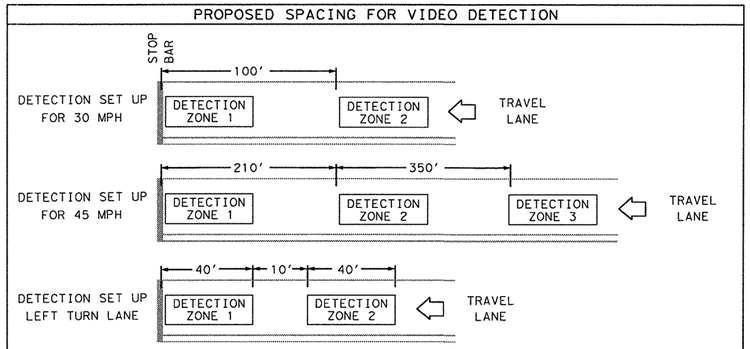

ELECTRICAL SERVICE DATA
ITEM 628

Service Pole No.	Sheet No.	Service Pole Description (See ED (4)-03)	Service Conduit Size	Service Conductors No./Size	Safety Switch Amps	Main Disconnect: Switch Amp/Fuse	Main Disconnect: Ckt. Bkr. Pole/Amp	Two-Pole Contactor Amps	Panelbd./Loadcenter Amp Rating (min)	Circuit No.	Branch Ckt. Bkr. Pole/Amps	Branch Circuit Amps	KVA Load
1		TY T (120/240) 000 (NS) GS (L) SP (O)	2 IN	3/#0 AWG	N/A	N/A	N/A	N/A	125	TRAFFIC SIGNAL	1P/50	40	10.8
										SAFETY LIGHTING SOUTH FRONTAGE ROAD	2P/20	5	
										SAFETY LIGHTING NORTH FRONTAGE ROAD	2P/20	5	
										ITS (TYPE 3 CAB)	1P/40	30	

STATE OF TEXAS
DANNY MAGEE
83653
LICENSED PROFESSIONAL ENGINEER

THE SEAL APPEARING ON THIS DOCUMENT WAS AUTHORIZED BY DANNY MAGEE, P.E. 83653.

MAY 12, 2005

©2005 Texas Department of Transportation

IH 35
LOOP 20 TO
UNIROYAL ROAD

ELECTRICAL DETAILS
UNIROYAL ROAD
AT IH 35
FRONTAGE ROADS

SHEET 2 OF 3

FED RD DIV NO	FEDERAL AID PROJECT NO	SHEET NO
6	NH-2002 (79)	684
STATE	STATE DIST	COUNTY
TEXAS	LAREDO	WEBB
CONT / SECT / JOB		HIGHWAY NO
0018 / 05 / 062, ETC		IH 35

SFTIFS

T:\LRDTROPR\FY-2005\Design\Traffic Signals\Uniroyal & IH 35
FILE NAME: M-Uniroyal Quant.dgn

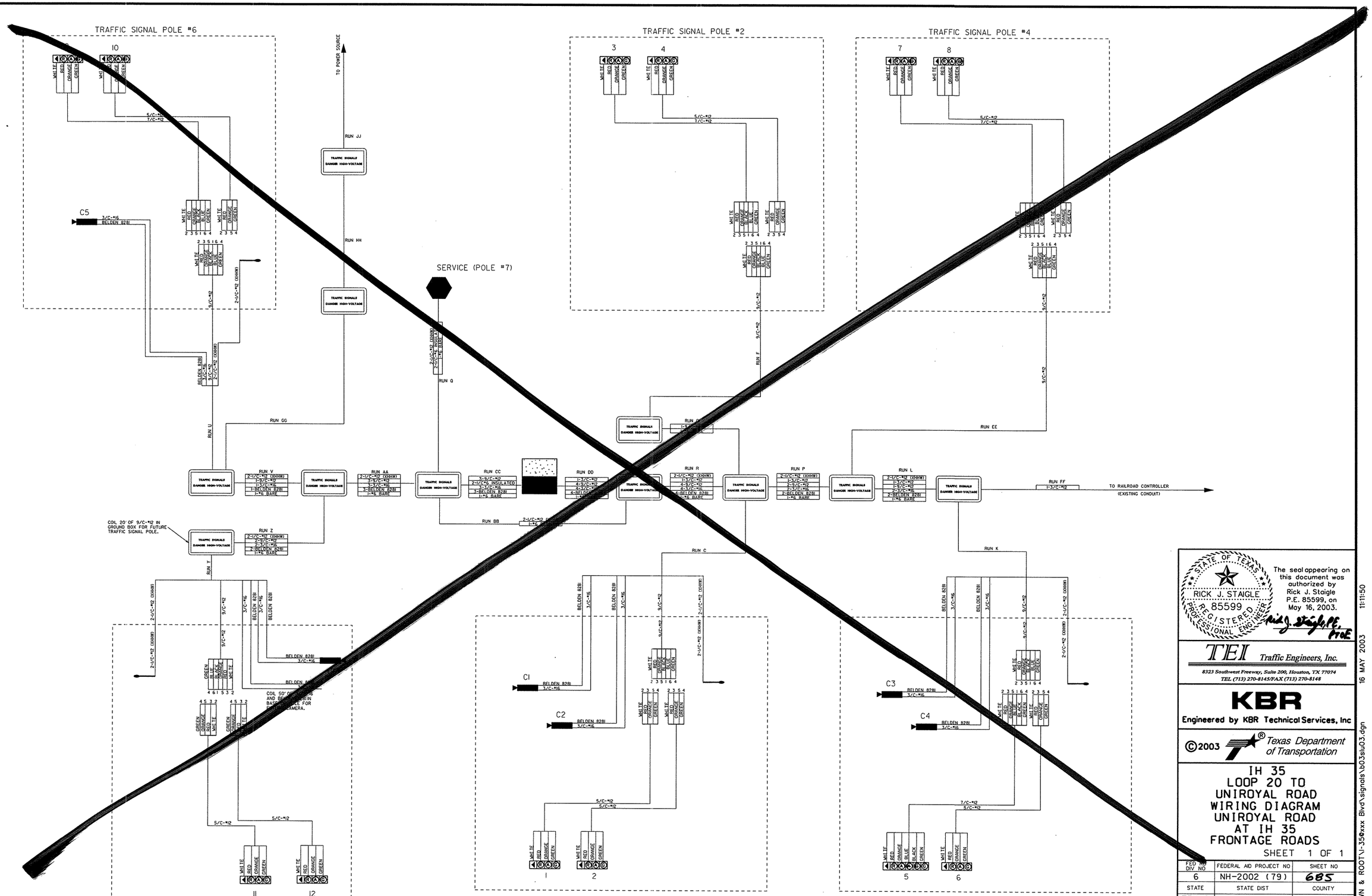

STATE OF TEXAS
RICK J. STAIGLE
85599
REGISTERED PROFESSIONAL ENGINEER

The seal appearing on this document was authorized by Rick J. Staigle P.E. 85599, on May 16, 2003.

Rick J. Staigle, P.E., P.T.O.E.

TEI Traffic Engineers, Inc.
8323 Southwest Freeway, Suite 200, Houston, TX 77074
TEL (713) 270-8145/FAX (713) 270-8148

KBR
Engineered by KBR Technical Services, Inc

©2003 Texas Department of Transportation

IH 35
LOOP 20 TO
UNIROYAL ROAD
WIRING DIAGRAM
UNIROYAL ROAD
AT IH 35
FRONTAGE ROADS

SHEET 1 OF 1

FED RD DIV NO	FEDERAL AID PROJECT NO		SHEET NO
6	NH-2002 (79)		685
STATE	STATE DIST		COUNTY
TEXAS	LAREDO		WEBB
CONT	SECT	JOB	HIGHWAY NO

REF FILE(S): j011op02.bdr, bdr LV ON = 18, 49, 56-58, 60-62

BROWN & ROOT\I-35&xxx Blvd\signals\b03slu03.dgn 16 MAY 2003 11:11:50

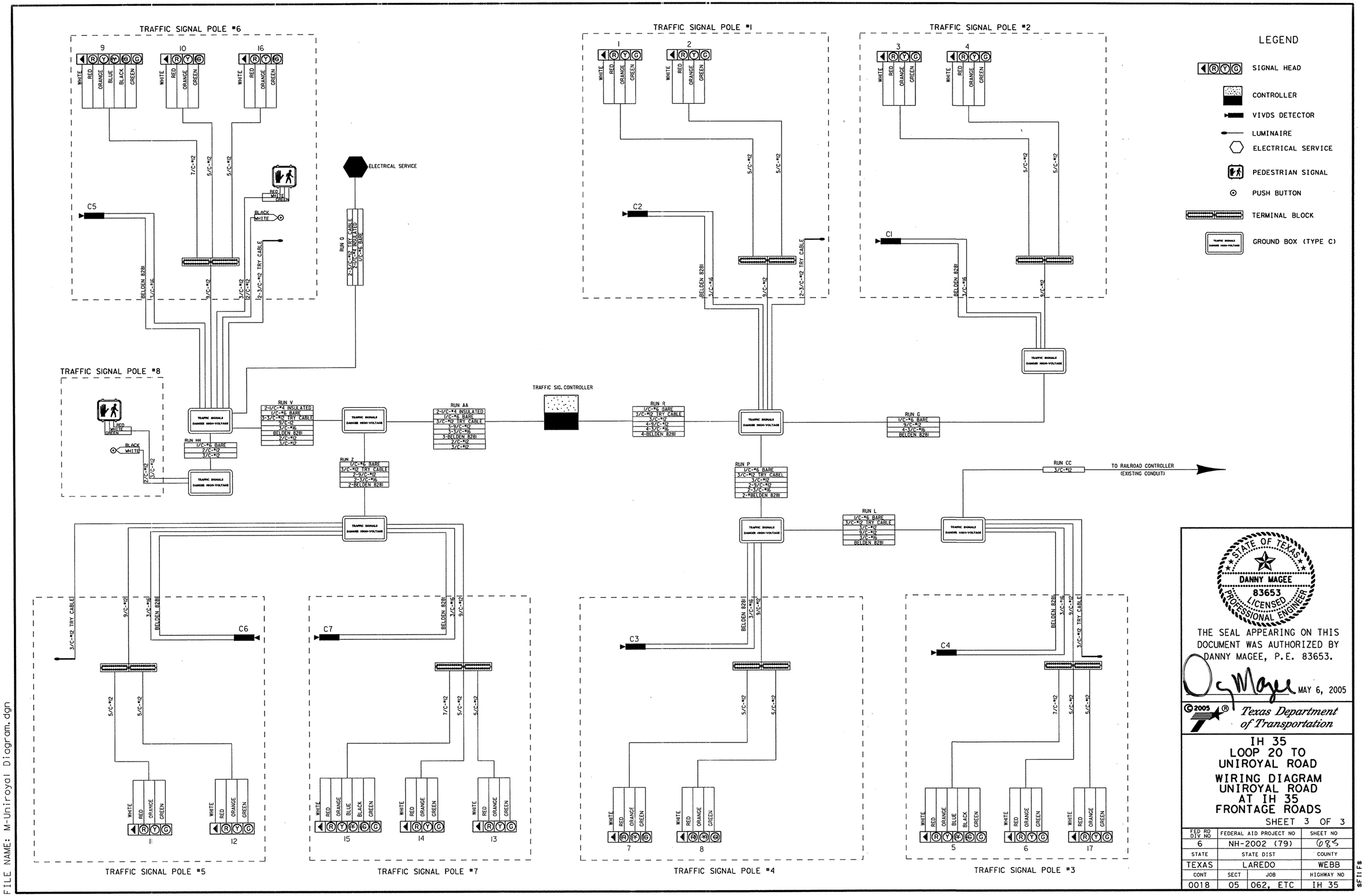

STATE OF TEXAS
DANNY MAGEE
83653
LICENSED
PROFESSIONAL ENGINEER

THE SEAL APPEARING ON THIS DOCUMENT WAS AUTHORIZED BY DANNY MAGEE, P.E. 83653.

MAY 6, 2005

©2005

Texas Department of Transportation

IH 35
LOOP 20 TO
UNIROYAL ROAD

WIRING DIAGRAM
UNIROYAL ROAD
AT IH 35
FRONTAGE ROADS

SHEET 3 OF 3

FED RD DIV NO	FEDERAL AID PROJECT NO		SHEET NO
6	NH-2002 (79)		085
STATE	STATE DIST		COUNTY
TEXAS	LAREDO		WEBB
CONT	SECT	JOB	HIGHWAY NO
0018	05	062, ETC	IH 35

$FILE$

T:\LRDTROPR\FY-2005\Design\Traffic Signals\Uniroyal & IH 35
FILE NAME: M-Uniroyal Diagram.dgn

NOTES:
1. CONTRACTOR ~~SHALL~~ FURNISH AND INSTALL A (TS 2) TEXAS DIAMOND CONTROLLER WITH 16-LOAD SWITCHES.
2. CONTRACTOR ~~SHALL~~ PROVIDE PROOF OF CERTIFICATION OF THE SIGNAL TECHNICIAN ASSIGNED TO THIS PROJECT.
3. CONTRACTOR ~~SHALL~~ EXPOSE UTILITIES AS NEEDED TO INSTALL POLE FOUNDATIONS.
4. CONTRACTOR ~~SHALL~~ INSTALL VIDEO DETECTION CAMERAS AT THE MAST ARMS WITH A FIVE FOOT EXTENSION PIPE.
5. SEE CARRIER DRIVE TRAFFIC SIGNAL POLE COLUMN & FOUNDATION AND TRAFFIC SIGNAL POLE SUPPORT ARCHITECTURAL TREATMENT SHEETS FOR POLE SUPPORT AND ELEVATION.

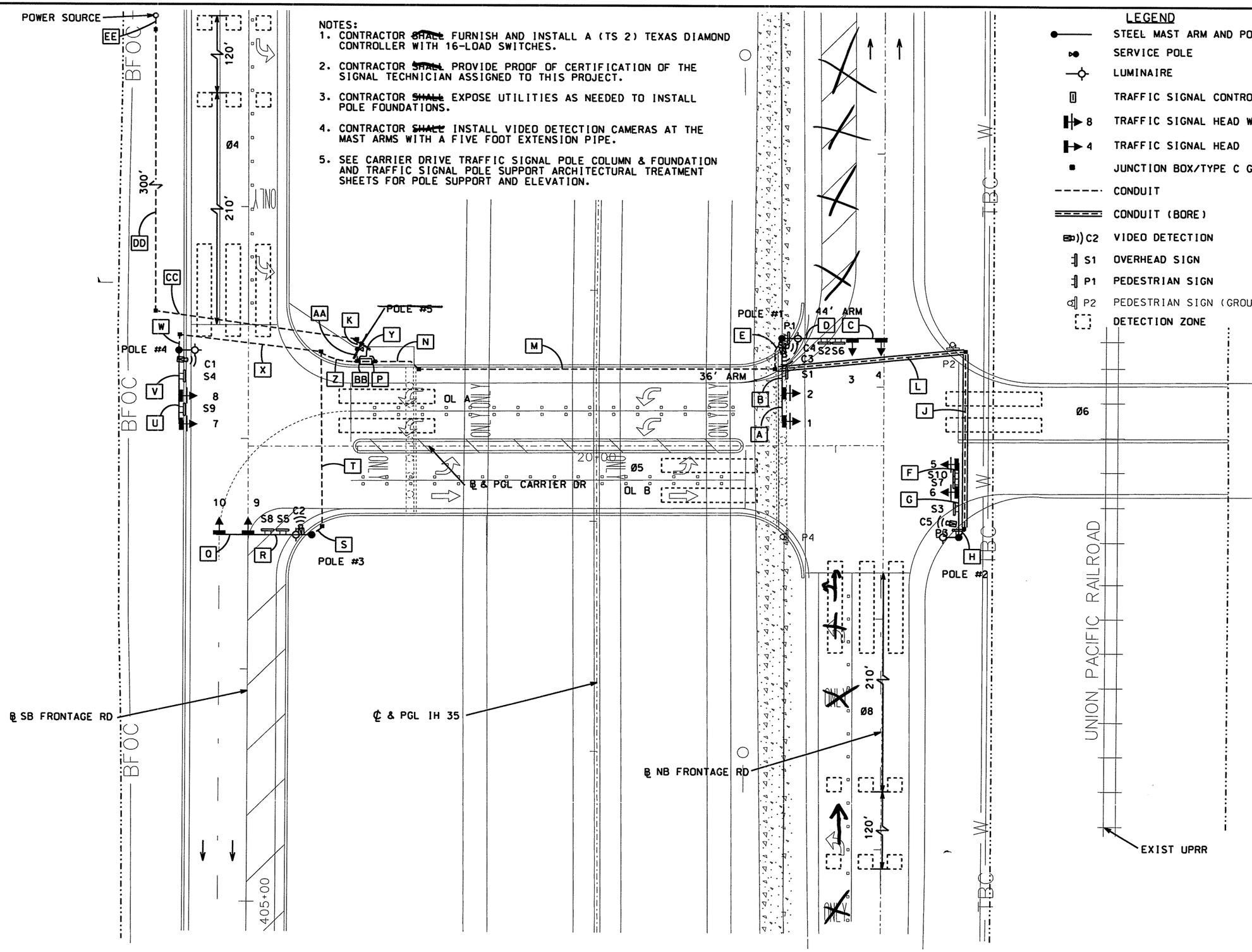

LEGEND

- STEEL MAST ARM AND POLE
- SERVICE POLE
- LUMINAIRE
- TRAFFIC SIGNAL CONTROLLER
- 8 TRAFFIC SIGNAL HEAD W/BACK PLATE
- 4 TRAFFIC SIGNAL HEAD
- JUNCTION BOX/TYPE C GROUND BOX
- CONDUIT
- CONDUIT (BORE)
- C2 VIDEO DETECTION
- S1 OVERHEAD SIGN
- P1 PEDESTRIAN SIGN
- P2 PEDESTRIAN SIGN (GROUND MOUNT)
- DETECTION ZONE

0 20 40
SCALE: 1" = 40'

STATE OF TEXAS
RICK J. STAIGLE
85599
REGISTERED PROFESSIONAL ENGINEER

The seal appearing on this document was authorized by Rick J. Staigle P.E. 85599, on April 17, 2003.

Rick J. Staigle, PE, PTOE

TEI Traffic Engineers, Inc.
8323 Southwest Freeway, Suite 200, Houston, TX 77074
TEL (713) 270-8145/FAX (713) 270-8148

KBR
Engineered by KBR Technical Services, Inc

©2003 Texas Department of Transportation

IH 35
LOOP 20 TO
UNIROYAL ROAD
SIGNAL LAYOUT
CARRIER DRIVE
AT IH 35
FRONTAGE ROADS

SHEET 1 OF 1

FED RD DIV NO	FEDERAL AID PROJECT NO	SHEET NO
6	NH-2002 (79)	686
STATE	STATE DIST	COUNTY
TEXAS	LAREDO	WEBB
CONT	SECT / JOB	HIGHWAY NO

BROWN & ROOT\I-35exxx Blvd\signals\b03slc01.dgn 17 APR 2003 15:35:03

REF FILE(S): j01lop01.row, row LV ON = 1-63
j01lop01.sgl, sgl LV ON = 1-63
j01lop01.spm, spm LV ON = 1-21, 30-63

REF FILE(S): j01lop01.bnt, bnt LV ON = 1-63
j01lop01.uti, uti LV ON = 1-63
j01lop01.eop, eop LV ON = 1-5, 7-13, 15-17, 19-63
j01lop01.bck, bck LV ON = 10
j01lop01.alg, alg LV ON = 1-6, 25-29
j01lop02.bdr, bdr LV ON = 18, 49, 56-58, 60-62

ELECTRICAL SCHEDULE

ITEM	TOTAL QTY.	RUN NUMBER / RUN LENGTH	A	B	C	D	E	F	G	H	J	K	L	M	N	P	Q	R	S	T	U	V	W	X	Y	Z	AA	BB	CC	DD	EE
		RUN LENGTH	12'	44'	12'	48'	20'	12'	40'	5'	75'	25'	80'	150'	25'	5'	12'	48'	5'	75'	12'	40'	10'	60'	10'	20'	10'	5'	85'	300'	10'
POWER	30'	1/C-#6 Insulated																									2	2			
	555'	1/C-#6 Bare					1			1	1		1	1	1	1			1	1			1	1	1	1	1	1			
	*1330'	1/C-#12 (XHHW) Insulated					2			2	2		2	2	2				2	2			2	2	2	2	2				
SIGNAL CABLE	* 396'	5/C-#12	1	2	1	2			1								1	2				1									
	* 104'	7/C-#12						1	1												1	1									
	*1045'	9/C-#12					2			1	1		1	3	3	3			2	2			1	1		3		3			
	*1245'	3/C-#16					2			1	1		1	3	3	3			2	2			1	1		3		3			
	*1245'	BELDEN 8281					2			1	1		1	3	3	3			2	2			1	1		3		3			
CONDUIT	170'	2" RM (HANGING)					1							1																	
	650'	2" PVC (TRENCH)								1		1			1	1			1	1			1	1	1	1	1	1	1	1	1
	155'	2" PVC (BORE)									1		1																		
	20'	3" RM (HANGING)					1																								
	155'	3" PVC (TRENCH)								1									1	1			1	1							
	155'	3" PVC (BORE)									1		1																		
	150'	4" RM (HANGING)												1																	
	55'	4" PVC (TRENCH)													1	1										1		1			

NOTES:
1. *INCLUDES QUANTITY ON SIGNAL POLE AND/OR LUMINAIRE OR COILED IN POLE OR JUNCTION BOX.
2. CONTRACTOR TO INSTALL CONDUIT PRIOR TO CONSTRUCTION OF ROADWAY. NO ADDITIONAL PAYMENT FOR BORING WILL BE ALLOWED IN THESE AREAS.
3. HANGING CONDUIT ~~SHALL BE~~ PAID AS OPEN TRENCH CONDUIT.
4. RUNS K, CC, DD & EE SHALL INCLUDE PULL WIRE IN 2" CONDUIT FOR ELECTRICAL SERVICE ~~TO BE~~ INSTALLED BY OTHERS.

TIMING CHART - 4 PHASE DIAMOND OPERATION

PHASE	1	2	OL B(4+5)	4	5	6	OL A(6+8)	8
STREET			CARRIER	WEST FR	CARRIER	CARRIER	CARRIER	EAST FR
DIRECTION			EB	SB	EB	WB	WB	NB
INITIAL			10	10	10	10	10	10
EXTENSION			1	2	1	2	1	2
MAXIMUM				45	45	45		45
YELLOW			3.5	5.0	3.5	3.5	3.5	5.0
ALL RED			2.5	1.5	2.5	2.5	2.5	1.5
PED.			N/A	N/A	N/A	N/A	N/A	N/A
PED. CLEAR			N/A	N/A	N/A	N/A	N/A	N/A
RECALL			OFF	OFF	OFF	OFF	OFF	OFF
MEMORY			OFF	ON	OFF	ON	OFF	ON

SIGN DETAILS

IH 35 NB FRNTG RD
S1, S3

IH 35 SB FRNTG RD
S4

CARRIER DR
S2, S5

R9-3A
P1, P3

R9-3A
P2, P4
(SEE SIGNING AND PAVEMENT MARKINGS SHEETS)

R3-5L
S6, S7, S8

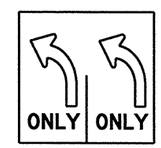

R3-8LT
S9

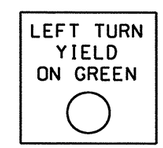

R10-12
S10

TRAFFIC SIGNAL POLES

POLE NO.	SIGNAL POLE DESIGNATION	MAST ARM DESIGN	~~FOUNDATION TYPE/DEPTH~~
1	4436L-100	44 III-100, 36 II-100	~~42-A/37~~
2	32L-100	32 II-100	~~36-A/34~~
3	4032L-100 *	40 III-100	~~42-A/40~~
4	32L-100	32 II-100	~~36-A/39~~
5	SERVICE POLE		~~24-A/25~~

NOTES:
1. *32' CLAMP ON ARM IS FOR FUTURE USE AND SHALL NOT BE ORDERED OR INSTALLED AS PART OF THIS PROJECT.

SEE SHEET 690 Rev. 1
FOR REVISED
FOUNDATION TYPE/DEPTH

SIGNAL HEAD SCHEDULE

SIGNALS W/ BACK PLATE 1, 2, 6 | SIGNALS 3, 4, 9, 10 | SIGNALS W/ BACK PLATE 7, 8 | SIGNAL W/ BACK PLATE 5

NOTES:
1. ALL INDICATIONS SHALL BE LED'S.

ELECTRICAL SERVICE DATA
ITEM 628

Service Pole No.	Sheet No.	Service Pole Description (See ED (4)-00)	Service Conduit Size	Service Conductors No./Size	Safety Switch Amps	Main Disconnect: Switch Amp/Fuse	Main Disconnect: Ckt. Bkr. Pole/Amp	Two-Pole Contactor Amps	Panelbd./Loadcenter Amp Rating (min)	Circuit No.	Branch Ckt. Bkr. Pole/Amps	Branch Circuit Amps	KVA Load
1		TY T (120/240) 000 (NS) GS (L) SP (U)	1½IN	3/#2 AWG	N/A	N/A	N/A	N/A	70	TRAFFIC SIGNAL	1P/50	40.0	5.3
										SAFETY LIGHTING	2P/20	1.9	

NOTE: FOR THE ELECTRICAL SERVICE, THERE SHALL BE: NO LIGHTING CONTACTOR, NO HAND OFF AUTO AND NO ENCLOSED MOUNTED PHOTOCELL.

STATE OF TEXAS
RICK J. STAIGLE
85599
REGISTERED PROFESSIONAL ENGINEER

The seal appearing on this document was authorized by Rick J. Staigle P.E. 85599, on May 16, 2003.

TEI Traffic Engineers, Inc.
8323 Southwest Freeway, Suite 200, Houston, TX 77074
TEL (713) 270-8145/FAX (713) 270-8148

KBR
Engineered by KBR Technical Services, Inc

©2003 Texas Department of Transportation

IH 35
LOOP 20 TO
UNIROYAL ROAD
ELECTRICAL DETAILS
CARRIER DRIVE
AT IH 35
FRONTAGE ROADS

SHEET 1 OF 1

FED RD DIV NO	FEDERAL AID PROJECT NO	SHEET NO
6	NH-2002 (79)	687
STATE	STATE DIST	COUNTY
TEXAS	LAREDO	WEBB
CONT	SECT / JOB	HIGHWAY NO

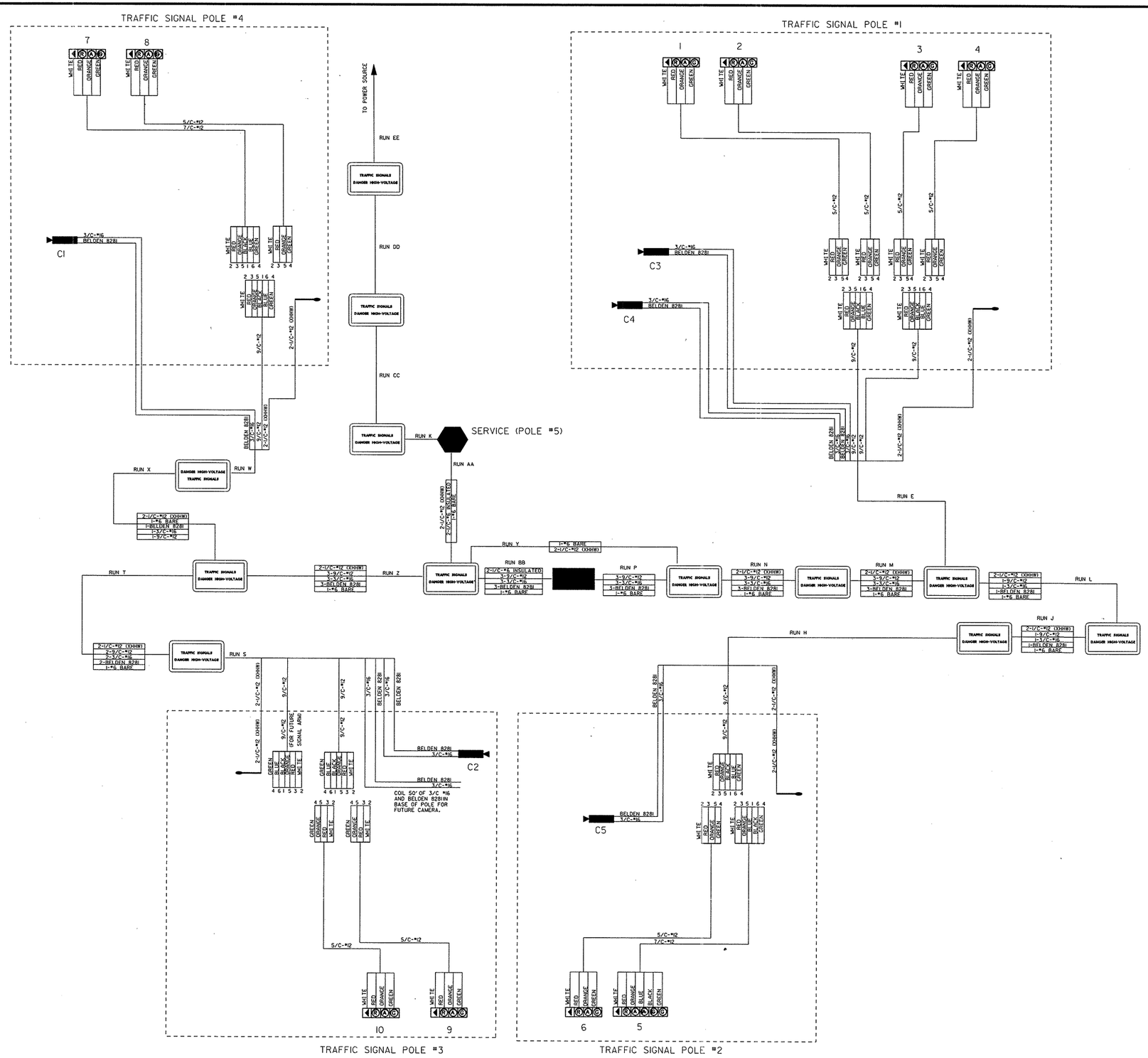

The seal appearing on this document was authorized by Rick J. Staigle P.E. 85599, on April 17, 2003.

STATE OF TEXAS
RICK J. STAIGLE
85599
REGISTERED PROFESSIONAL ENGINEER

TEI Traffic Engineers, Inc.
8323 Southwest Freeway, Suite 200, Houston, TX 77074
TEL (713) 270-8145/FAX (713) 270-8148

KBR
Engineered by KBR Technical Services, Inc

©2003 Texas Department of Transportation

IH 35
LOOP 20 TO
UNIROYAL ROAD
WIRING DIAGRAM
CARRIER DRIVE
AT IH 35
FRONTAGE ROADS

SHEET 1 OF 1

FED RD DIV NO	FEDERAL AID PROJECT NO	SHEET NO
6	NH-2002 (79)	688
STATE	STATE DIST	COUNTY
TEXAS	LAREDO	WEBB
CONT	SECT / JOB	HIGHWAY NO

REF FILE(S): j01lop02.bdr, bdr LV ON = 18, 49, 56-58, 60-62

BROWN & ROOT\I-35\xxx Blvd\signals\b03sic03.dgn 17 APR 2003 15:35:50

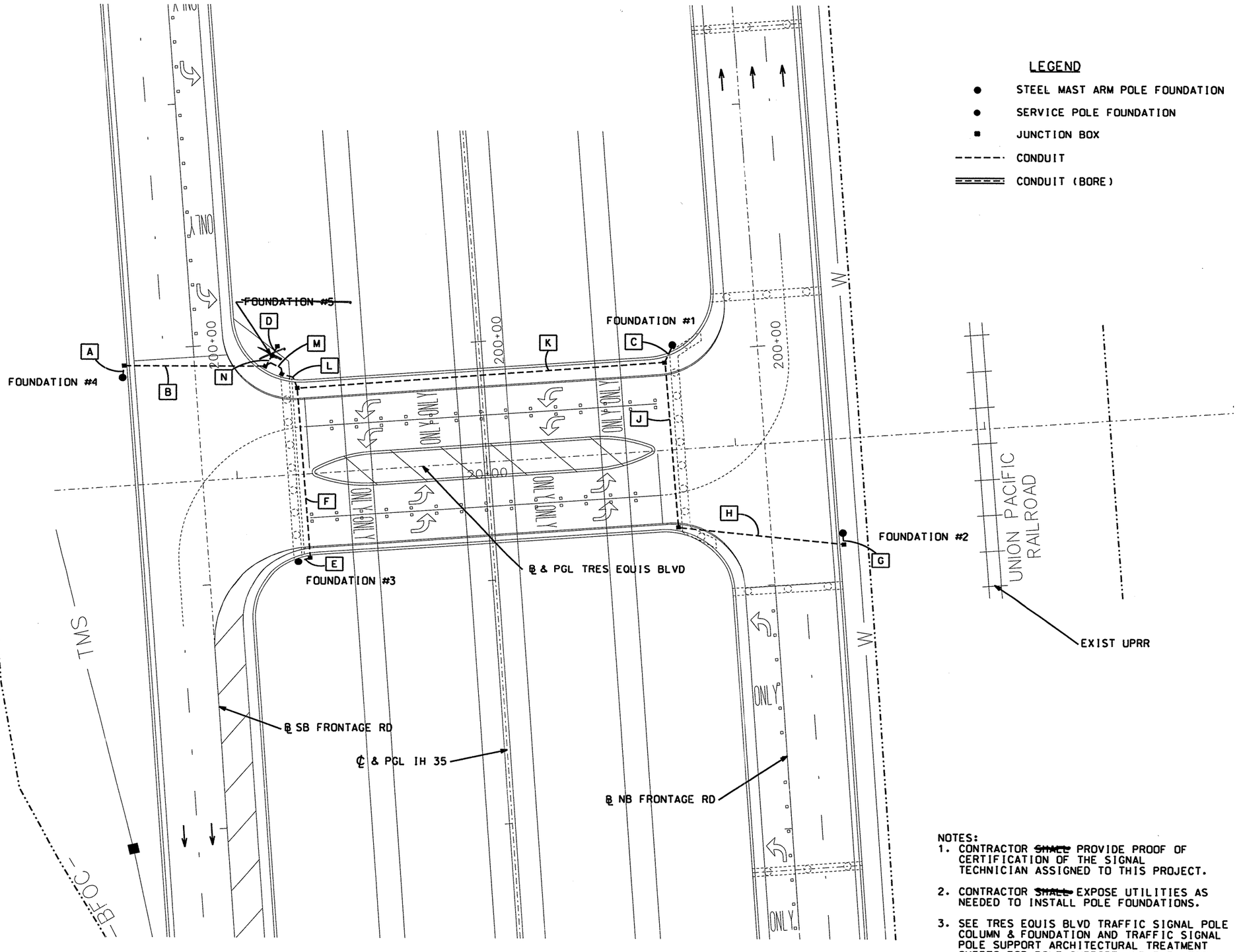

NOTES:

1. CONTRACTOR ~~SHALL~~ PROVIDE PROOF OF CERTIFICATION OF THE SIGNAL TECHNICIAN ASSIGNED TO THIS PROJECT.
2. CONTRACTOR ~~SHALL~~ EXPOSE UTILITIES AS NEEDED TO INSTALL POLE FOUNDATIONS.
3. SEE TRES EQUIS BLVD TRAFFIC SIGNAL POLE COLUMN & FOUNDATION AND TRAFFIC SIGNAL POLE SUPPORT ARCHITECTURAL TREATMENT SHEETS FOR POLE SUPPORT AND ELEVATION.

0 20 40
SCALE: 1" = 40'

STATE OF TEXAS
RICK J. STAIGLE
85599
REGISTERED PROFESSIONAL ENGINEER

The seal appearing on this document was authorized by Rick J. Staigle P.E. 85599, on April 17, 2003.

TEI Traffic Engineers, Inc.
8323 Southwest Freeway, Suite 200, Houston, TX 77074
TEL (713) 270-8145/FAX (713) 270-8148

KBR
Engineered by KBR Technical Services, Inc

©2003 Texas Department of Transportation

IH 35
LOOP 20 TO
UNIROYAL ROAD
SIGNAL LAYOUT
TRES EQUIS BOULEVARD
AT IH 35
FRONTAGE ROADS

SHEET 1 OF 1

FED RD DIV NO	FEDERAL AID PROJECT NO	SHEET NO
6	NH-2002 (79)	689
STATE	STATE DIST	COUNTY
TEXAS	LAREDO	WEBB
CONT	SECT / JOB	HIGHWAY NO

REF FILE(S): j011op01.bnt, bnt LV ON = 1-63
jc 01.uti, uti LV ON = 1-63
jc 01.eqp, eqp LV ON = 1-5, 7-13, 15-17, 19-63
j011op01.bck, bck LV ON = 10
j011op01.alg, alg LV ON = 1-6, 25-29
j011op02.bdr, bdr LV ON = 18, 49, 56-58, 60-62

REF FILE(S): j011or01.row, row LV ON = 1-63
j011op01.sgl, sgl LV ON = 1-15, 17-63
j011op01.spm, spm LV ON = 1-21, 30-63
j991or01.row, row

BROWN & ROOT\1-35\xxx Blvd\signals\b03six01.dgn 17 APR 2003 15:37:43

ELECTRICAL SCHEDULE

ITEM	TOTAL QTY.	RUN NUMBER	A	B	C	D	E	F	G	H	J	K	L	M	N	P	Q	R	S	T	U	V	W	X	Y
		RUN LENGTH	5'	60'	10'	25'	5'	70'	5'	70'	70'	150'	15'	10'	10'										
POWER		1/C-#6 Insulated																							
		1/C-#6 Bare																							
		1/C-#12 (XHHW) Insulated																							
SIGNAL CABLE		5/C-#12																							
		7/C-#12																							
		9/C-#12																							
		3/C-#16																							
		BELDEN 8281																							
CONDUIT	540'	2" RM (HANGING)			1			3		1	1	1	2												
	120'	2" PVC (TRENCH)	1	1		1	1		1					1	1										
	220'	3" RM (HANGING)			1			1		1	1														
	90'	3" PVC (TRENCH)	1	1			1		1				1												
	150'	4" RM (HANGING)										1													
	15'	4" PVC (TRENCH)											1												

NOTES:
1. CONTRACTOR TO INSTALL CONDUIT PRIOR TO CONSTRUCTION OF ROADWAY. NO ADDITIONAL PAYMENT FOR BORING WILL BE ALLOWED IN THESE AREAS.
2. HANGING CONDUIT ~~SHALL BE~~ PAID AS OPEN TRENCH CONDUIT.

~~STELL MAST ARM POLE FOUNDATIONS~~

~~FOUNDATION NO.~~	~~FOUNDATION TYPE/DEPTH~~
1	42-A/48
2	36-A/46
~~3~~	~~42-A/43~~
4	36-A/28
5	24-A/32

SEE SHEET 705 REV. 1
FOR REVISED FOUNDATION
TYPE/DEPTH

STATE OF TEXAS
RICK J. STAIGLE
85599
REGISTERED PROFESSIONAL ENGINEER

The seal appearing on this document was authorized by Rick J. Staigle P.E. 85599, on April 17, 2003.

Rick J. Staigle P.E.

TEI Traffic Engineers, Inc.
8323 Southwest Freeway, Suite 200, Houston, TX 77074
TEL (713) 270-8145/FAX (713) 270-8148

KBR
Engineered by KBR Technical Services, Inc

©2003 Texas Department of Transportation

IH 35
LOOP 20 TO
UNIROYAL ROAD
ELECTRICAL DETAILS
TRES EQUIS BOULEVARD
AT IH 35
FRONTAGE ROADS

SHEET 1 OF 1

FED RD DIV NO	FEDERAL AID PROJECT NO	SHEET NO
6	NH-2002 (79)	690
STATE	STATE DIST	COUNTY
TEXAS	LAREDO	WEBB
CONT	SECT / JOB	HIGHWAY NO

BROWN & ROOT\I-35@xxx Blvd\signals\b03sls02.dgn 17 APR 2003 15:38:07
EF FILE(S): j011op02.bdr, bdr LV ON = 18, 49, 56-58, 60-62

Arm Length	ROUND POLES					POLYGONAL POLES					Foundation Type
	D_B	D_{19}	D_{24}	D_{30}	① thk	D_B	D_{19}	D_{24}	D_{30}	① thk	
ft.	in.	in.	in.	in.	in.	in.	in.	in.	in.	in.	
△1 20	12.0	9.3	8.6	7.8	.239	12.5	9.5	8.7	7.8	.239	36-A
△1 24	12.0	9.3	8.6	7.8	.239	13.0	10.0	9.2	8.3	.239	36-A
28	12.0	9.3	8.6	7.8	.239	13.5	10.5	9.7	8.8	.239	36-A
32	13.0	10.3	9.6	8.8	.239	14.0	11.0	10.2	9.3	.239	36-A
36	13.5	10.8	10.1	9.3	.239	15.0	12.0	11.2	10.3	.239	36-A
40	14.0	11.3	10.6	9.8	.239	16.0	13.0	12.2	11.3	.239	36-B
44	14.5	11.8	11.1	10.3	.239	16.5	13.5	12.7	11.8	.239	36-B

Arm Length	ROUND ARMS					POLYGONAL ARMS				
	L_1	D_1	D_2	① thk	Rise	L_1	D_1	② D_2	① thk	Rise
ft.	ft.	in.	in.	in.		ft.	in.	in.	in.	
20	19.1	8.0	5.3	.179	1'-8"	19.1	8.0	3.5	.179	1'-7"
24	23.1	9.0	5.8	.179	1'-9"	23.1	9.0	3.5	.179	1'-8"
28	27.1	9.5	5.7	.179	1'-10"	27.1	10.0	3.5	.179	1'-9"
32	31.0	9.5	5.2	.239	1'-11"	31.0	9.5	3.5	.239	1'-10"
36	35.0	10.0	5.1	.239	2'-0"	35.0	10.0	3.5	.239	1'-11"
40	39.0	10.5	5.1	.239	2'-3"	39.0	11.0	3.5	.239	2'-1"
44	43.0	11.0	5.1	.239	2'-8"	43.0	11.5	4.0	.239	2'-3"

D_B = Pole Base O.D.
D_{19} = Pole Top O.D. with no Luminaire and no ILSN
D_{24} = Pole Top O.D. with ILSN w/out Luminaire
D_{30} = Pole Top O.D. with Luminaire
D_1 = Arm Base O.D.
D_2 = Arm End O.D.
L_1 = Shaft Length
L = Nominal Arm Length

① Thickness shown are minimums, thicker materials may be used.

② D_2 may be increased by up to 1" for polygonal arms.

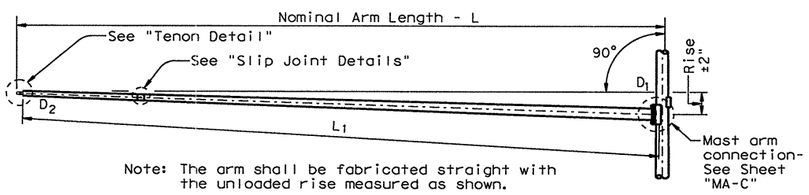

Note: The arm shall be fabricated straight with the unloaded rise measured as shown.

TRAFFIC SIGNAL ARM

(Fixed Mount)

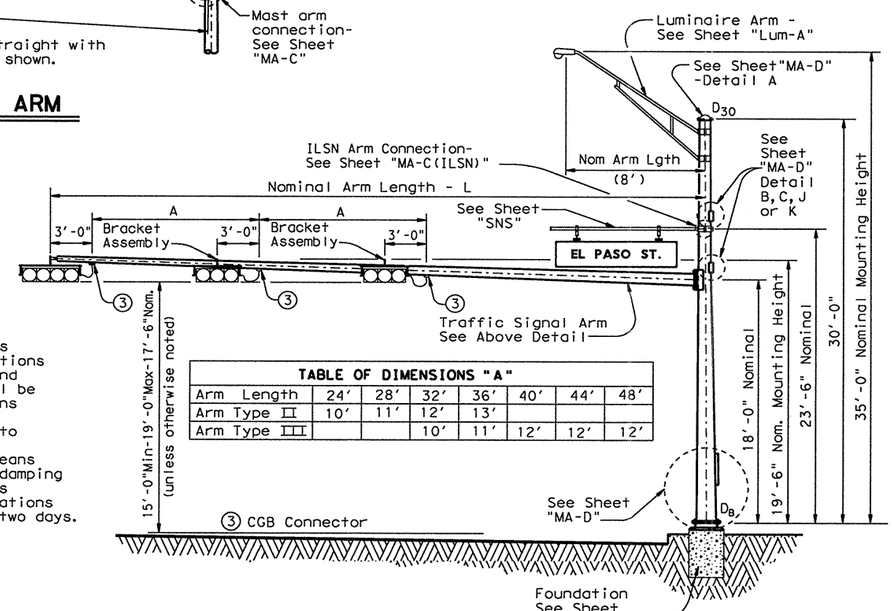

TABLE OF DIMENSIONS "A"							
Arm Length	24'	28'	32'	36'	40'	44'	48'
Arm Type II	10'	11'	12'	13'			
Arm Type III			10'	11'	12'	12'	12'

STRUCTURE ASSEMBLY

VIBRATION WARNING

Mast Arms of approximately 40' or longer are subject to possible harmonic vertical vibrations in light wind conditions due to unusual combinations of signal numbers, weights or positions, arm-wind orientation, and arm-pole stiffness. Arms shall be visually inspected in 5 to 20 mph wind conditions after signal head installation and, if vertical movements with a total excursion (max positive to max negative) of more than approximately 8" are observed at arm tip, damping devices or other means shall be fitted to the arm(s). The necessary damping device(s) or other remedial measures shall be as recommended by the fabricator. Excessive vibrations shall not be allowed to continue for more than two days.

SHIPPING PARTS LIST

Ship each pole with the following attached: enlarged hand hole, pole cap, fixed-arm connection bolts and washers and any additional hardware listed in the table.

Nominal Arm Length	30' Poles With Luminaire		24' Poles With ILSN		19' Poles With No Luminaire and No ILSN	
	Above hardware plus: One (or two if ILSN attached) small hand hole, clamp-on simplex		Above hardware plus one small hand hole		See note above	
ft	Designation	Quantity	Designation	Quantity	Designation	Quantity
20	20L-100		20S-100		20-100	
24	24L-100		24S-100		24-100	
28	28L-100	1	28S-100		28-100	
32	32L-100	4	32S-100		32-100	
36	36L-100		36S-100		36-100	
40	40L-100		40S-100		40-100	1
44	44L-100	1	44S-100		44-100	1

Traffic Signal Arms (1 per pole) Ship each arm with the listed equipment attached

Nominal Arm Length	Type I Arm (1 Signal)		Type II Arm (2 Signals)		Type III Arm (3 Signals)	
	1 CGB connector		1 Bracket Assembly and 2 CGB Connectors ④		2 Bracket Assemblies and 3 CGB Connectors ④	
ft	Designation	Quantity	Designation	Quantity	Designation	Quantity
20	20I-100					
24	24I-100		24II-100			
28	28I-100		28II-100	1		
32			32II-100	4	32III-100	
36			36II-100		36III-100	
40					40III-100	1
44					44III-100	2

Luminaire Arms (1 per 30' pole)

Nominal Arm Length	Quantity
8' Arm	6

④ Supply Option "A" unless otherwise noted

ILSN Arm (Max. 2 per pole) Ship with clamps, bolts and washers

Nominal Arm Length	Quantity
7' Arm	
9' Arm	

Anchor Bolt Assemblies (1 per pole)

Anchor Bolt Diameter	Anchor Bolt Length	Quantity
1 ½"	3'-4"	
1 ¾"	3'-10"	7
2"	4'-3"	3

Each anchor bolt assembly consists of the following: Top and Bottom templates, 4 anchor bolts, 8 nuts, 8 flat washers, 4 lock washers and 4 nut anchor devices (Type 2) per Standard Drawing "TS-FD".

Templates may be removed for shipment.

SHEET 1 OF 2

11/99 Revision

△1 Changed to Facilitate new terminal strip enclosure

Texas Department of Transportation
Traffic Operations Division

TRAFFIC SIGNAL SUPPORT STRUCTURES

SINGLE MAST ARM ASSEMBLY

(100 MPH WIND ZONE)

SMA-100(1)-99

FILE: SMA-100.DGN	DN: MS	CK: JSY	DW: MMF	CK: JSY
©TxDOT August 1995	DIST	FED REG	FEDERAL AID PROJECT	SHEET
REVISIONS 5-96 11-99	LAREDO	6	NH-2002 (79)	691
	COUNTY		CONTROL SECT JOB	HIGHWAY

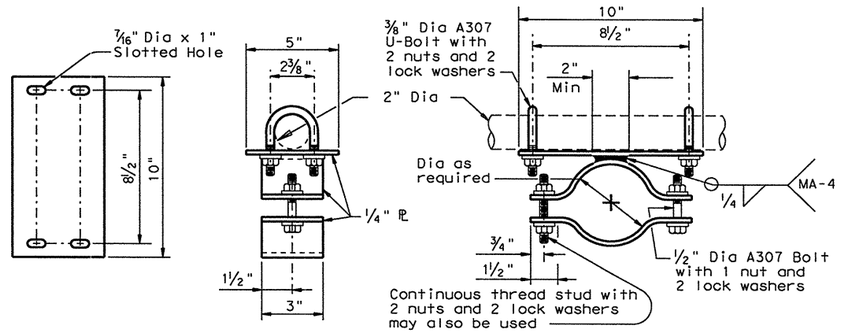

BRACKET ASSEMBLY DETAILS OPTION A

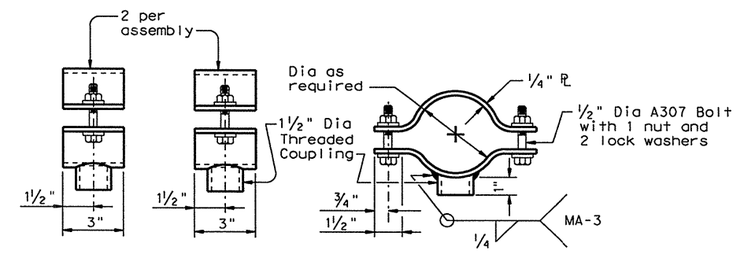

BRACKET ASSEMBLY DETAILS OPTION B

Stainless steel bands and cast bracket as in "Astro-Brac" with 1½" Dia Threaded Coupling.

BRACKET ASSEMBLY OPTION C

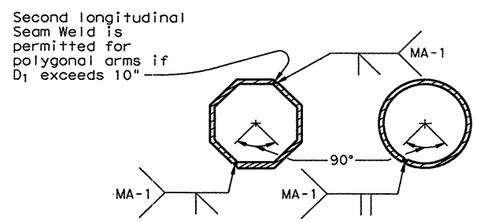

Longitudinal Seam Weld must be oriented within the lower 90° of the signal arm.

ARM WELD DETAIL

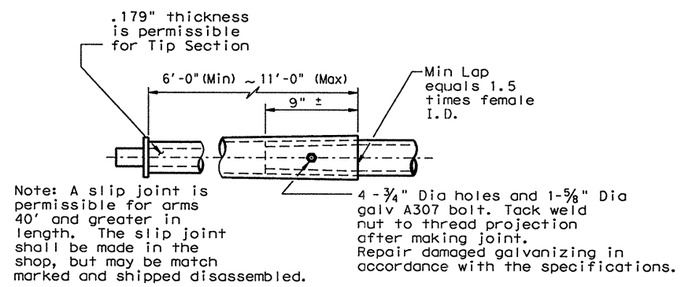

Note: A slip joint is permissible for arms 40' and greater in length. The slip joint shall be made in the shop, but may be match marked and shipped disassembled.

SLIP JOINT DETAIL

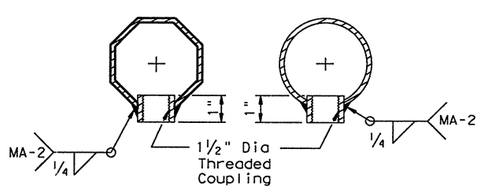

COUPLING DETAILS

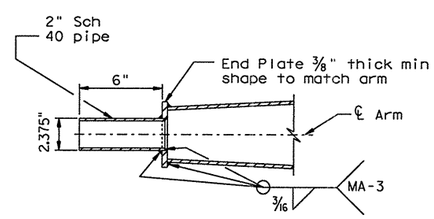

TENON DETAIL

GENERAL NOTES:

Design conforms to 1994 AASHTO Standard Specifications for Structural Supports for Highway Signs, Luminaires, and Traffic Signals and Interim Specifications thereto. Design Wind Speed equals 100 mph plus a 1.3 gust factor.

Poles are designed to support one 8'-0" luminaire arm, one 9'-0" internally lighted street name sign and one traffic signal arm with a length as tabulated. The specified luminaire load applied at the end of the luminaire arm equals 75 lbs vertical dead load plus the horizontal wind load on an effective projected area of 1.5 sq ft. The specified internally lighted street name sign load applied 4.5 ft from the centerline of the pole equals 85 lbs vertical dead load plus horizontal wind load on an effective projected area of 11.5 sq ft. The specified signal load applied at the end of the traffic signal arm equals 180 lbs vertical dead load plus the horizontal wind load on an effective projected area of 32.4 sq ft (actual area times drag coefficient).

See Standard Sheet "MA-D" for pole details, "MA-C" for traffic signal arm connection details, "MA-C (ILSN)" for internally lighted street name sign arm connection details, "LUM-A" for luminaire arm and connection details, "SNS" for internally lighted street name sign details, and "TS-FD" for anchor bolt and foundation details. See "MA-C" for material specifications.

Fabrication shall be in accordance with the Specifications and with the details, dimensions, and weld procedures shown herein. Weld references call for preapproved weld procedures which the Fabricator must obtain prior to fabrication. Miscellaneous welds which do not call for preapproved weld procedures are nevertheless subject to rejection for poor workmanship. Materials, fabrication tolerances, and shipping practices shall meet the requirements of this sheet and the Specifications.

Unless otherwise noted, all parts shall be galvanized in accordance with the Specifications.

Special design require submission of shop drawings in accordance with the item "Steel Structures".

Texas Department of Transportation
Traffic Operations Division

TRAFFIC SIGNAL SUPPORT STRUCTURES

SINGLE MAST ARM ASSEMBLY

(100 MPH WIND ZONE)

SMA-100(2)-96

FILE: SMA-100.DGN	DN: MS	CK: JSY	DW: MMF	CK: JSY			
© TxDOT August 1995	DIST	FED REG	FEDERAL AID PROJECT •				SHEET
REVISIONS	LAREDO	6	NH-2002 (79)				692
5-96	COUNTY		CONTROL	SECT	JOB	HIGHWAY	
	WEBB		0018	05	062	FM 1472	

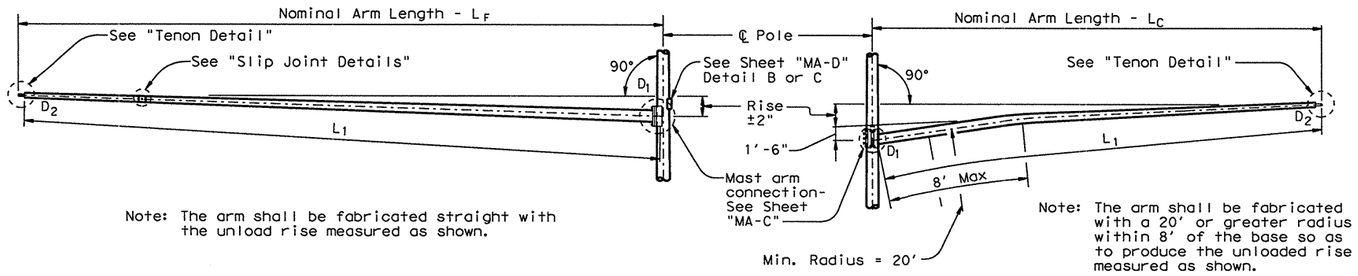

FIXED MOUNT TRAFFIC SIGNAL ARM

CLAMP-ON TRAFFIC SIGNAL ARM

Mast Arms of approximately 40'-0" or longer are subject to possible harmonic vertical vibrations in light wind conditions due to unusual combinations of signal numbers, weights or positions, arm-wind orientation, and arm-pole stiffness.

Arms shall be visually inspected in 5 to 20 mph wind conditions after signal head installation and, if vertical movements with a total excursion (max positive to max negative) of more than approximately 8" are observed at arm tip, damping devices or other means shall be fitted to the arm(s).

The necessary damping device(s) or other remedial measures shall be as recommended by the fabricator. Excessive vibrations shall not be allowed to continue for more than two days.

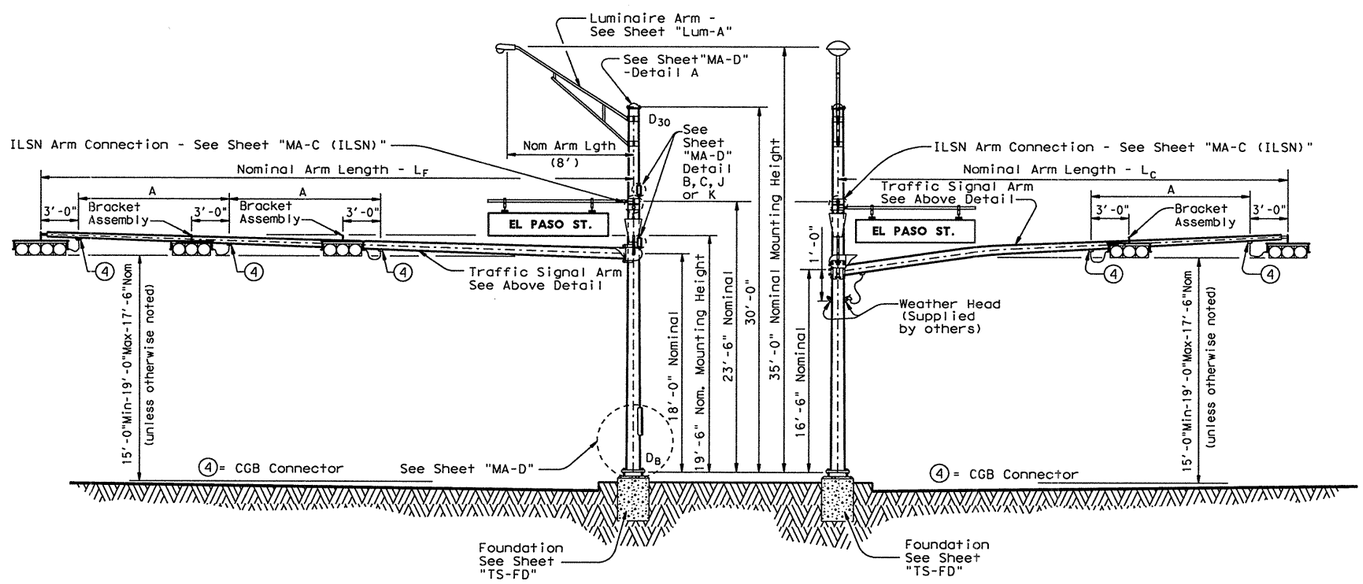

ELEVATION
(Showing fixed mount arm)

STRUCTURE ASSEMBLY

ELEVATION
(Showing clamp mount arm)

Design conforms to 1994 AASHTO Standard Specifications for Structural Supports for Highway Signs, Luminaires and Traffic Signals and Interim Specifications thereto. Design Wind Speed equals 100 mph plus a 1.3 gust factor. Designs are based on an arm included angle of 90 degrees or more. Angles of less than approximately 75 degrees will require a special design.

Poles are designed to support one 8'-0" luminaire arm, two 9'-0" internally lighted street name signs and two traffic signal arms with length combinations as tabulated. The specified luminaire load applied at the end of luminaire arm equals 75 lbs vertical dead load plus the horizontal wind load on an effective projected area of 1.5 sq ft. The specified internally lighted street name sign applied 4'-6" from the centerline of the pole equals 85 lbs vertical dead load plus the horizontal wind load on an effective projected area of 11.5 sq ft. The specified signal load applied at the end of the traffic signal arm equals 180 lbs vertical dead load plus the horizontal wind load on an effective projected area of 32.4 sq ft (actual area times drag coefficient).

See Standard Sheet "MA-D" for pole details, "MA-C" for traffic signal arm connection details, "MA-C (ILSN)" for internally lighted street name sign arm connection details, "LUM-A" for luminaire arm and connection details, "SNS" for internally lighted street name sign details, and "TS-FD" for anchor bolt and foundation details. See "MA-C" for material specifications.

Fabrication shall be in accordance with the Specifications and with the details, dimensions, and weld procedures shown herein. Weld references call for preapproved weld procedures which the Fabricator must obtain prior to fabrication. Miscellaneous welds which do not call for preapproved weld procedures are nevertheless subject to rejection for poor workmanship. Material, fabrication tolerances, and shipping practices shall meet the requirements of this sheet and the Specifications.

Unless otherwise noted, all parts shall be galvanized in accordance with the Specifications.

Special designs require submission of shop drawings in accordance with the item "Steel Structures".

TABLE OF DIMENSIONS "A"						
Arm Length	24'	28'	32'	36'	40'	44'
Arm Type II	10'	11'	12'	13'		
Arm Type III			10'	11'	12'	12'

Texas Department of Transportation
Traffic Operations Division

TRAFFIC SIGNAL SUPPORT STRUCTURES
DUAL MAST ARM ASSEMBLY
(100 MPH WIND ZONE)
DMA-100 (1)-96

FILE: DMA-100.DGN	DN: MS	CK: JSY	DW: MMF	CK: JSY
©TxDOT August 1995	DIST	FED REG	FEDERAL AID PROJECT •	SHEET
5-96 REVISIONS	LAREDO	6	NH-2002 (79)	693
	COUNTY		CONTROL	SECT	JOB	HIGHWAY
	WEBB		0018	05	062, ETC	IH 35

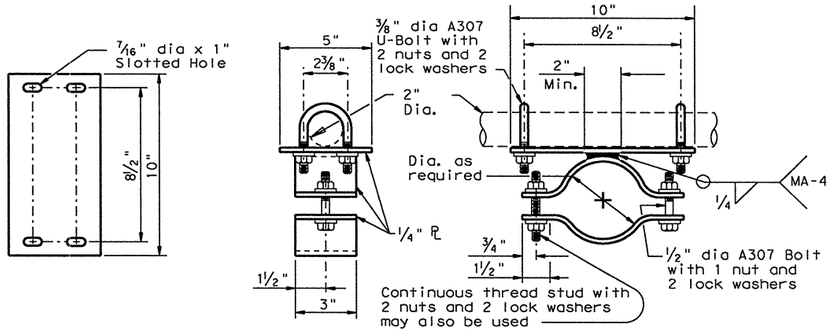

BRACKET ASSEMBLY DETAILS OPTION A

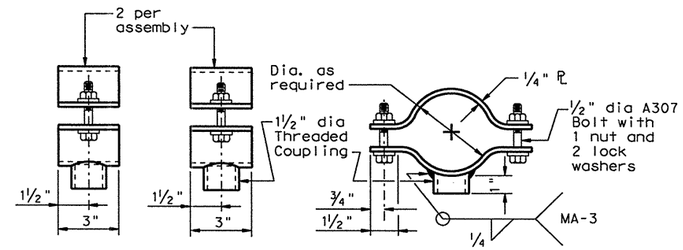

BRACKET ASSEMBLY DETAILS OPTION B

Stainless steel bands and cast bracket as in "Astro-Brac" with 1 1/2" dia Threaded Coupling.

BRACKET ASSEMBLY DETAILS OPTION C

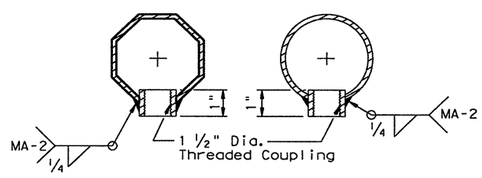

COUPLING DETAILS

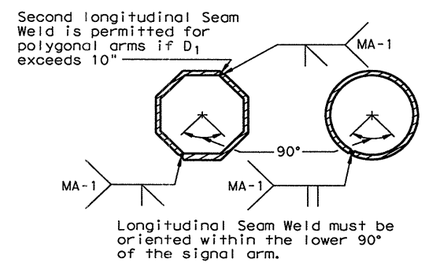

ARM WELD DETAIL

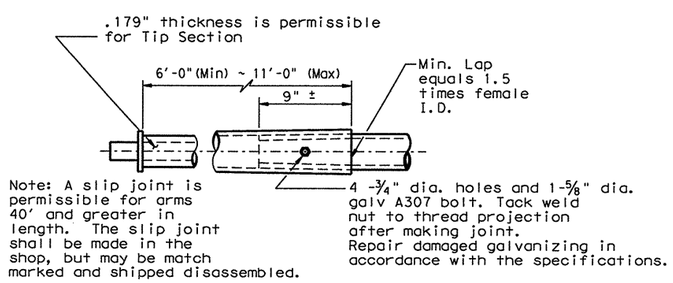

SLIP JOINT DETAIL

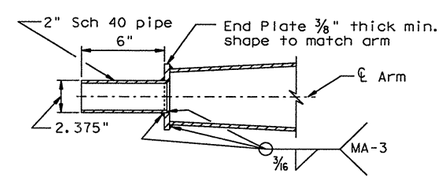

TENON DETAIL

SHEET 2 OF 3

Texas Department of Transportation
Traffic Operations Division

TRAFFIC SIGNAL SUPPORT STRUCTURES
DUAL MAST ARM ASSEMBLY
(100 MPH WIND ZONE)
DMA-100 (2)-96

FILE: DMA-100.DGN	DN: MS	CK: JSY	DW: MMF	CK: JSY		
© TxDOT August 1995	DIST	FED REG	FEDERAL AID PROJECT			SHEET
REVISIONS	LAREDO	6	NH-2002 (79)			694
5-96	COUNTY		CONTROL	SECT	JOB	HIGHWAY
	WEBB		0018	05	062, ETC	IH 35

SHIPPING PARTS LIST

Ship each pole with the following attached: enlarged hand hole, pole cap, fixed arm connection bolts and washers and any additional hardware listed in the table.

Nominal Arm Length LF ft.	Nominal Arm Length LC ft.	30' Poles With Luminaire: See note above plus: one (or two if ILSN attached) small hand hole, clamp-on simplex — Designation	Quantity	24' Poles With ILSN: See note above plus one small hand hole — Designation	Quantity	19' Poles With no Luminaire and no ILSN: See note above — Designation	Quantity
20	20	2020L-100		2020S-100		2020-100	
24	20	2420L-100		2420S-100		2420-100	
	24	2424L-100		2424S-100		2424-100	
28	20	2820L-100		2820S-100		2820-100	
	24	2824L-100		2824S-100		2824-100	
	28	2828L-100		2828S-100		2828-100	
32	20	3220L-100		3220S-100		3220-100	
	24	3224L-100		3224S-100		3224-100	
	28	3228L-100		3228S-100		3228-100	
	32	3232L-100		3232S-100		3232-100	
36	20	3620L-100		3620S-100		3620-100	
	24	3624L-100		3624S-100		3624-100	
	28	3628L-100		3628S-100		3628-100	
	32	3632L-100		3632S-100		3632-100	
	36	3636L-100		3636S-100		3636-100	
40	20	4020L-100		4020S-100		4020-100	
	24	4024L-100		4024S-100		4024-100	
	28	4028L-100		4028S-100		4028-100	
	32	4032L-100	1	4032S-100		4032-100	
	36	4036L-100		4036S-100		4036-100	
44	20	4420L-100		4420S-100		4420-100	
	24	4424L-100		4424S-100		4424-100	
	28	4428L-100		4428S-100		4428-100	
	32	4432L-100		4432S-100		4432-100	
	36	4436L-100	1	4436S-100		4436-100	

Traffic Signal Arms (Fixed Mount) (1 per pole) Ship each arm w/ the listed equipment attached

Nominal Arm Length ft.	Type I Arm (1 Signal): 1 CGB connector — Designation	Quantity	Type II Arm (2 Signals): 1 Bracket Assembly ① and 2 CGB Connectors — Designation	Quantity	Type III Arm (3 Signals): 2 Bracket Assemblies ① and 3 CGB Connectors — Designation	Quantity
20	20I-100					
24	24I-100		24II-100			
28	28I-100		28II-100			
32			32II-100		32III-100	
36			36II-100		36III-100	
40					40III-100	1
44					44III-100	1

Traffic Signal Arms (Clamp-On Mount) (1 per pole) Ship each arm w/ the listed equipment attached

Nominal Arm Length ft.	Type I Arm (1 Signal): 2 CGB connector and 1 clamp w/bolts and washers — Designation	Quantity	Type II Arm (2 Signals): 1 Bracket Assembly ①, 3 CGB Connectors, and 1 clamp w/bolts and washers — Designation	Quantity	Type III Arm (3 Signals): 2 Bracket Assembly ①, 4 CGB Connectors, and 1 clamp w/bolts and washers — Designation	Quantity
20	20I-100					
24	24I-100		24II-100			
28	28I-100		28II-100			
32			32II-100		40III-100	
36			36II-100	1	44III-100	

Luminaire Arms (1 per 30' pole)

Nominal Arm Length	Quantity
8' Arm	2

ILSN Arm (1 or 2 per pole) ship with clamps, bolts and washers

Nominal Arm Length	Quantity
7' Arm	
9' Arm	

Anchor Bolt Assemblies (1 per pole)

Anchor Bolt Diameter	Anchor Bolt Length	Quantity
1 ¾"	3'-10"	
2"	4'-3"	
2 ¼"	4'-9"	4

Each anchor bolt assembly consists of the following: Top and Bottom templates, 4 anchor bolts, 8 nuts, 8 flat washers, 4 lock washers and 4 nut anchor devices (Type 2) per Standard Drawing "TS-FD".

Templates may be removed for shipment.

① Supply Option "A" unless otherwise noted

ARMS LF ft.	ARMS LC ft.	ROUND POLES D_B in.	D_{19} in.	D_{24} in.	D_{30} in.	② thk in.	POLYGONAL POLES D_B in.	D_{19} in.	D_{24} in.	D_{30} in.	② thk in.	Foundation Type
20	20	12.0	9.3	8.6	7.8	.239	13.5	10.5	9.7	8.8	.239	36-A
24	20	12.5	9.8	9.1	8.3	.239	13.5	10.5	9.7	8.8	.239	36-A
	24	12.5	9.8	9.1	8.3	.239	14.0	11.0	10.2	9.3	.239	36-A
28	20	13.0	10.3	9.6	8.8	.239	14.5	11.5	10.7	9.8	.239	36-A
	24	13.0	10.3	9.6	8.8	.239	15.0	12.0	11.2	10.3	.239	36-A
	28	13.5	10.8	10.1	9.3	.239	15.0	12.0	11.2	10.3	.239	36-A
32	20	13.5	10.8	10.1	9.3	.239	15.0	12.0	11.2	10.3	.239	36-A
	24	13.5	10.8	10.1	9.3	.239	15.0	12.0	11.2	10.3	.239	36-A
	28	14.0	11.3	10.6	9.8	.239	15.5	12.5	11.7	10.8	.239	36-B
	32	14.0	11.3	10.6	9.8	.239	15.5	12.5	11.7	10.8	.239	36-B
36	20	14.0	11.3	10.6	9.8	.239	15.5	12.5	11.7	10.8	.239	36-B
	24	14.0	11.3	10.6	9.8	.239	16.0	13.0	12.2	11.3	.239	36-B
	28	14.5	11.8	11.1	10.3	.239	16.0	13.0	12.2	11.3	.239	36-B
	32	14.5	11.8	11.1	10.3	.239	16.0	13.0	12.2	11.3	.239	36-B
	36	14.5	11.8	11.1	10.3	.239	16.5	13.5	12.7	11.8	.239	36-B
40	20	14.5	11.8	11.1	10.3	.239	16.5	13.5	12.7	11.8	.239	36-B
	24	15.0	12.3	11.6	10.8	.239	16.5	13.5	12.7	11.8	.239	36-B
	28	15.0	12.3	11.6	10.8	.239	17.0	14.0	13.2	12.3	.239	42-A
	32	15.0	12.3	11.6	10.8	.239	17.0	14.0	13.2	12.3	.239	42-A
	36	15.5	12.8	12.1	11.3	.239	17.5	14.5	13.7	12.8	.239	42-A
44	20	15.5	12.8	12.1	11.3	.239	17.5	14.5	13.7	12.8	.239	42-A
	24	15.5	12.8	12.1	11.3	.239	17.5	14.5	13.7	12.8	.239	42-A
	28	16.0	13.3	12.6	11.8	.239	18.0	15.0	14.2	13.3	.239	42-A
	32	16.0	13.3	12.6	11.8	.239	18.0	15.0	14.2	13.3	.239	42-A
	36	16.0	13.3	12.6	11.8	.239	18.0	15.0	14.2	13.3	.239	42-A

Arm LF or LC ft.	ROUND ARMS L_1 ft.	D_1 in.	D_2 in.	② thk in.	Rise	POLYGONAL ARMS L_1 ft.	D_1 in.	③ D_2 in.	② thk in.	Rise
20	19.1	8.0	5.3	.179	1'-8"	19.1	8.0	3.5	.179	1'-7"
24	23.1	9.0	5.8	.179	1'-9"	23.1	9.0	3.5	.179	1'-8"
28	27.1	9.5	5.7	.179	1'-10"	27.1	10.0	3.5	.179	1'-9"
32	31.0	9.5	5.2	.239	1'-11"	31.0	9.5	3.5	.239	1'-10"
36	35.0	10.0	5.1	.239	2'-0"	35.0	10.0	3.5	.239	1'-11"
40	39.0	10.5	5.1	.239	2'-3"	39.0	11.0	3.5	.239	2'-1"
44	43.0	11.0	5.1	.239	2'-8"	43.0	11.5	4.0	.239	2'-3"

D_B = Pole Base O.D.
D_{19} = Pole Top O.D. with no Luminaire and no ILSN
D_{24} = Pole Top O.D. with ILSN w/out Luminaire
D_{30} = Pole Top O.D. with Luminaire
D_1 = Arm Base O.D.
D_2 = Arm End O.D.
L_1 = Shaft Length
L_F = Fixed Arm Length
L_C = Clamp-on Arm Length (36' Max)

② Thickness shown are minimums, thicker materials may be used.

③ D_2 may be increased by up to 1.0" for polygonal arms.

Texas Department of Transportation
Traffic Operations Division

TRAFFIC SIGNAL SUPPORT STRUCTURES
DUAL MAST ARM ASSEMBLY
(100 MPH WIND ZONE)
DMA-100 (3)-96

FILE: DMA-100.DGN	DN: MS	CK: JSY	DW: MMF	CK: JSY
© TxDOT August 1995	DIST	FED REG	FEDERAL AID PROJECT	SHEET
REVISIONS 5-96	LAREDO	6	NH-2002 (79)	695
	COUNTY		CONTROL SECT JOB	HIGHWAY
	WEBB		0018 05 062 ETC	IH 35

ARM SIZE D_1 in.	‡ in.	A in.	B in.	C in.	D in.	E in.	CONN BOLT DIA in.
6.5	.179	12	9	9	6	1	1
7.5	.179	13	9	10	6	1	1
8.0	.179	14	10	11	7	1 1/4	1 1/4
9.0	.179	16	11	13	8	1 1/4	1 1/4
9.5	.179	17	12	14	9	1 1/4	1 1/4
9.5	.239	18	12	15	9	1 1/4	1 1/4
10.0	.239	18	12	15	9	1 1/4	1 1/4
10.5	.239	18	13	15	10	1 1/2	1 1/2
11.0	.239	18	13	15	10	1 1/2	1 1/2

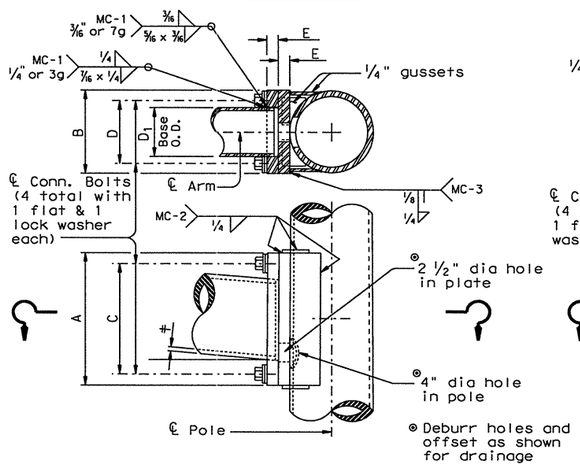

FIXED MOUNT DETAIL 1

ARM SIZE D_1 in.	‡ in.	A in.	F in.	CONN. BOLTS No. ea.	CONN. BOLTS Dia in.	PIN BOLTS No. ea.	PIN BOLTS Dia in.
6.5	.179	12	8	4	* 7/8	2	5/8
7.5	.179	14	8	4	1	2	5/8
8.0	.179	14	8	4	1	2	5/8
9.0	.179	16	10	4	1	2	5/8
9.5	.179	18	12	4	1 1/4	3	5/8
9.5	.239	18	12	4	1 1/4	3	5/8
10.0	.239	18	12	4	1 1/4	3	5/8

*1" Dia connection bolts are permissible

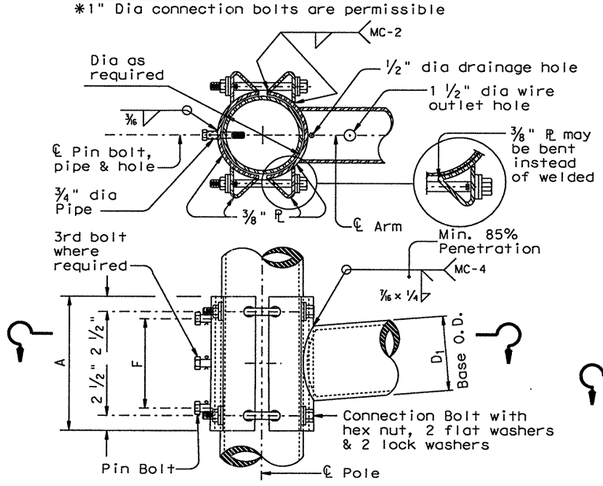

CLAMP-ON DETAIL 1

ARM SIZE D_1 in.	‡ in.	A in.	B in.	C in.	D in.	E in.	CONN BOLT DIA in.
7.0	.179	11	11	8	8	1 1/4	1 1/4
7.5	.179	11	11	8	8	1 1/4	1 1/4
8.0	.179	11	11	8	8	1 1/4	1 1/4
9.0	.179	13	13	10	10	1 1/4	1 1/4
10.0	.179	13	13	10	10	1 1/4	1 1/4
9.5	.239	13	13	10	10	1 1/4	1 1/4
10.0	.239	14	14	11	11	1 1/2	1 1/2
11.0	.239	14	14	11	11	1 1/2	1 1/2
11.5	.239	14	14	11	11	1 1/2	1 1/2

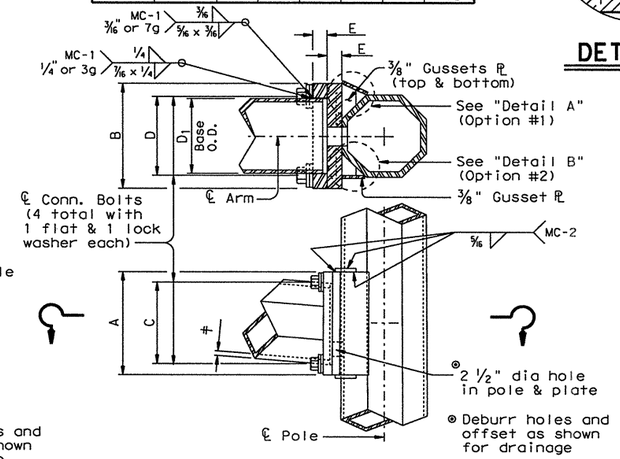

FIXED MOUNT DETAIL 2

ARM SIZE D_1 in.	‡ in.	A in.	F in.	T in.	CONN. BOLTS No. ea.	CONN. BOLTS Dia in.	PIN BOLTS No. ea.	PIN BOLTS Dia in.
7.0	.179	12	8	3/4	4	3/4	2	5/8
7.5	.179	14	8	3/4	4	3/4	2	5/8
8.0	.179	14	8	3/4	4	3/4	2	5/8
9.0	.179	16	10	7/8	4	1	2	5/8
10.0	.179	18	10	7/8	4	1	2	5/8
9.5	.239	18	10	1	6	1	3	5/8
10.0	.239	18	10	1	6	1	3	5/8

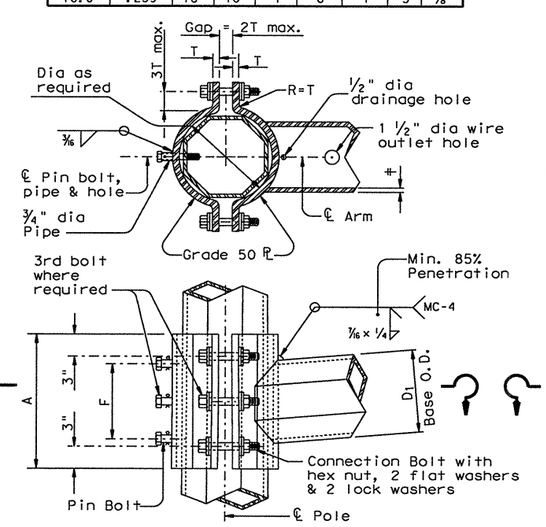

CLAMP-ON DETAIL 2

ARM SIZE D_1 in.	‡ in.	A in.	F in.	CONN. BOLTS No. ea.	CONN. BOLTS Dia in.	PIN BOLTS No. ea.	PIN BOLTS Dia in.
6.5	.179	12	8	4	1	2	5/8
7.5	.179	14	8	4	1	2	5/8
8.0	.179	14	8	4	1	2	5/8
9.0	.179	16	10	4	1	2	5/8
9.5	.179	18	12	6	1	3	5/8
9.5	.239	18	12	6	1	3	5/8
10.0	.239	18	12	6	1	3	5/8

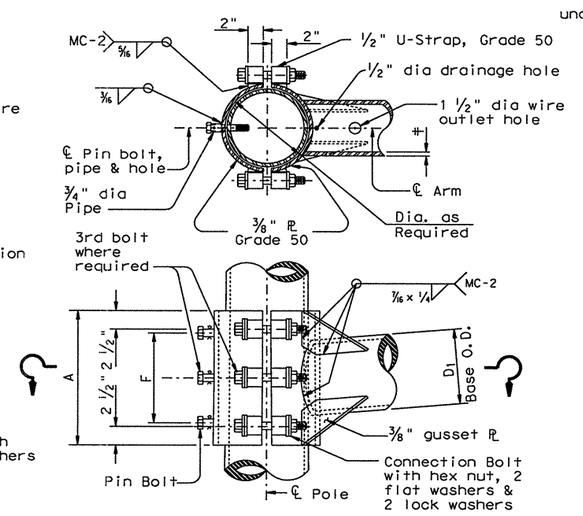

CLAMP-ON DETAIL 3

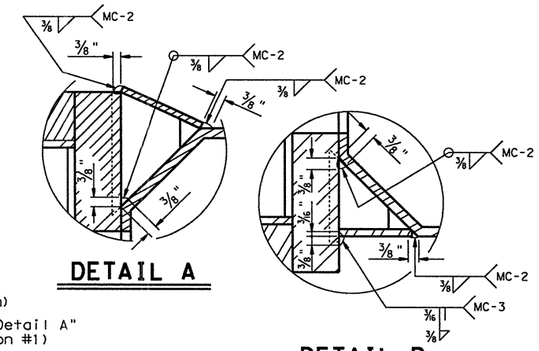

DETAIL A

DETAIL B

MATERIALS	
Round Shafts or Polygonal Shafts	ASTM A595 GR A, ASTM A570 GR 50, ASTM A607 GR 50, ASTM A572 GR 50 or A36M50
Plates (1)	ASTM A36 OR A572 GR 50 or A595(2) or A36M50
Connection Bolts	ASTM A325 except where noted
Pin Bolts	ASTM A325
Pipe	ASTM A53 GR A or B, or A501
Misc. Hardware	Galvanized steel or stainless steel or as noted

(1) Any of the materials listed for plates may be used where the drawings do not specify a particular Grade designation.

(2) If A595 material is used, it need not be cold worked to A595 requirments, but material must have 40 ksi minimum yield prior to fabrication.

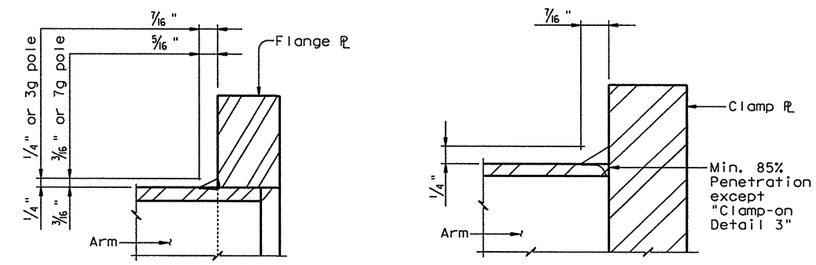

FIXED MOUNT ARM

CLAMP-ON ARM

ARM BASE WELD DETAILS

GENERAL NOTES:

Clamp-on details are used for the second arm on dual mast arm assemblies. A Maximum 1 1/2" wide vertical slotted hole may be cut in the front clamp plate to facilitate drainage during galvanizing. The slot shall be centered behind the arm and shall be no longer than the arm diameter minus 1"

Fixed mount details are used for single mast arm assemblies and for the first arm on dual mast arm assemblies.

Where duplicate parts occur on a detail, welds shown for one part shall apply to all similar parts on the detail.

Pin bolts are required to prevent rotation of clamp-on arms under design wind forces.

NOTE:

Pin bolts shall be A325 with threads excluded from the shear plane. Pin bolt and 3/4" dia pipe shall have 3/16" dia holes for a 1/8" dia galvanized cotter pin. Back clamp plate shall be furnished with a 3/4" dia hole for each pin bolt. An 11/16" dia hole for each pin bolt shall be field drilled through the pole after arm orientations have been approved by the Engineer.

Texas Department of Transportation
Traffic Operations Division

STANDARD ASSEMBLY FOR TRAFFIC SIGNAL SUPPORT STRUCTURES

MAST ARM CONNECTIONS

MA-C-96

FILE: MA-C.DGN	DN: MS	CK: JSY	DW: MMF	CK: JSY
© TxDOT August 1995	DIST	FED REG	FEDERAL AID PROJECT •	SHEET
REVISIONS 5-96	LAREDO	6	NH-2002 (79)	696
	COUNTY		CONTROL SECT JOB	HIGHWAY
	WEBB		0018 05 062, ETC	IH 35

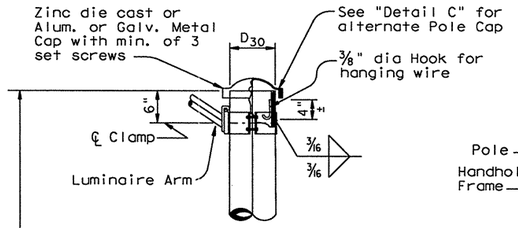

DETAIL A

(for pole with luminaire)

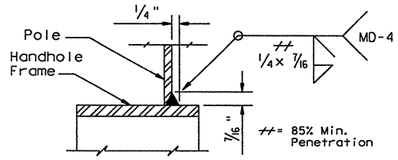

DETAIL E

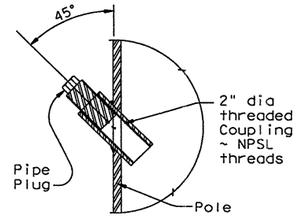

COUPLING DETAIL

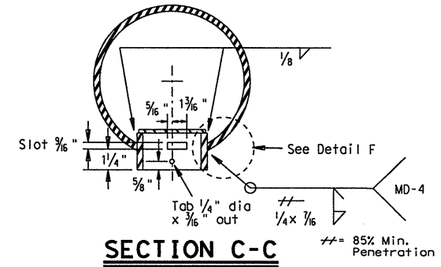

SECTION C-C

Opening for access compartment shall be no more than 1/16 inch wider than the access compartment itself.

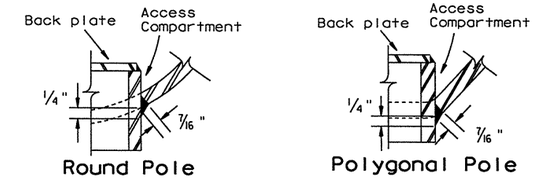

DETAIL F

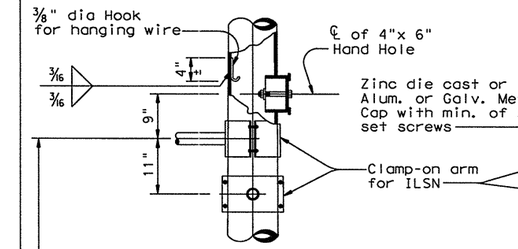

DETAIL J

(If ILSN applied)

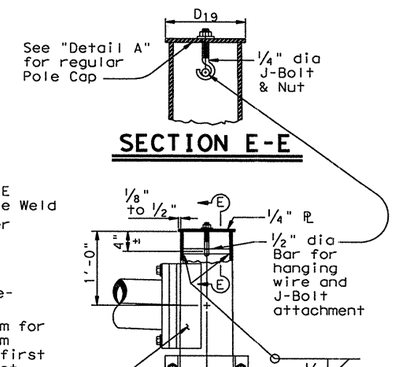

SECTION E-E

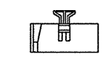

DOUBLE FUSE BLOCK

For luminaire fuses Littelfuse #L60030M-2SQ or equal, supplied and installed by field contractor when required.

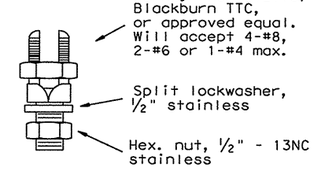

COPPER GROUND CONNECTOR

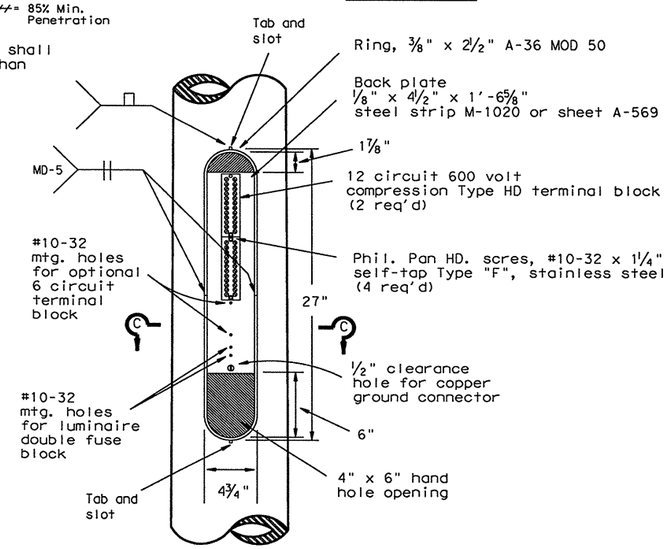

ACCESS COMPARTMENT

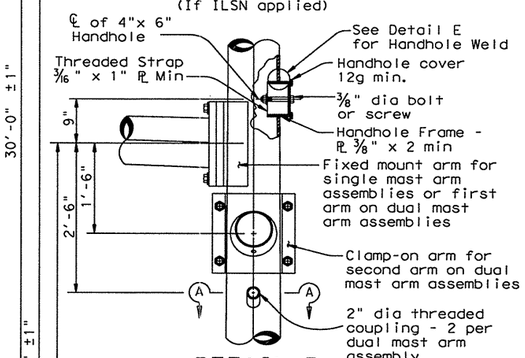

DETAIL B

(for 30' pole with luminaire and ILSN sign)

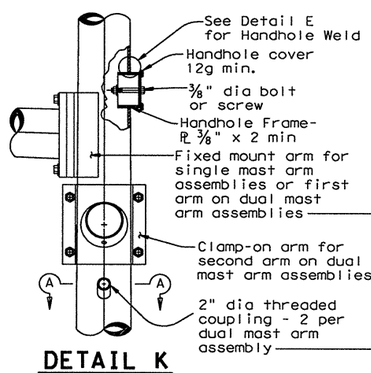

DETAIL K

(for 24' pole with ILSN sign and no luminaire)

DETAIL C

(for 19' pole with no ILSN sign and no luminaire)

1. The cover shall be one piece formed from ABS plastic, shall be a pearl gray color, and shall be suitable for exposure to harsh sunlight and extreme weather. Cover shall latch with two screw latches and shall fit tightly to the enclosure ring to create a rainproof seal. Latch screws shall be 1/4-20 stainless flat socket head screws with tamper proof feature.
2. The pole manufacturer shall provide with each pole a separate kit consisting of: one cover with two latching assemblies, two terminal strips (Marathon #985GP12CU or approved equal), four #10-32 x 1 1/4" self tapping type "F" stainless steel pan head screws, and one ground connector (Blackburn TTC, Burndy KC22J12T13, or Ilsco SSS-5). The traffic signal contractor shall install the kit items in the field.
3. The screw hole spacing on the enclosure back plate shall be for two Marathon #985GP12 terminal strips, one Marathon #985GP06CU terminal strip, and one Littelfuse #L60030M-2SQ fuse block. Arrangement of the items shall be as shown in the Access Compartment detail.

Anchor Bolt Diameter	Bolt Hole Diameter	Slot Length	Bolt Circle Diameter	Base PL Dim. L x T	Adjust. Range
1 1/2"	1 3/4"	3 1/2"	17"	18" x 1 1/2"	13.4°
1 3/4"	2"	4"	19"	20" x 1 3/4"	13.5°
2"	2 1/4"	4 1/2"	21"	22" x 2"	13.6°
2 1/4"	2 1/2"	5"	23"	24" x 2 1/4"	13.7°

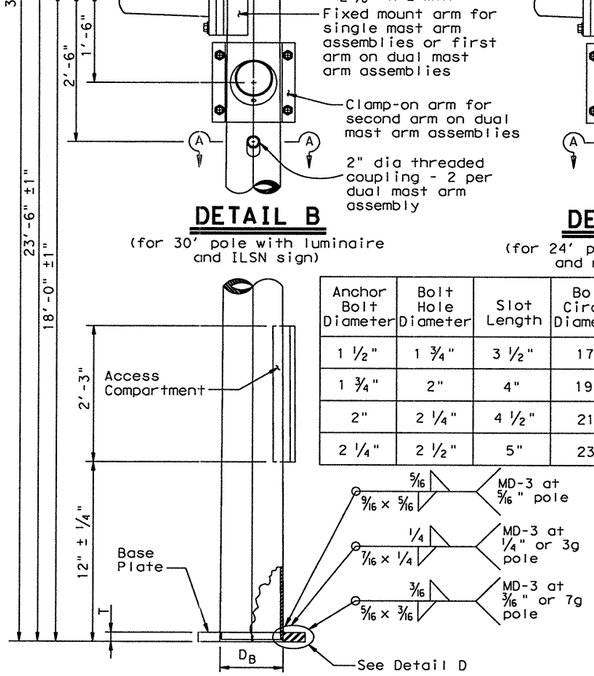

POLE ELEVATION

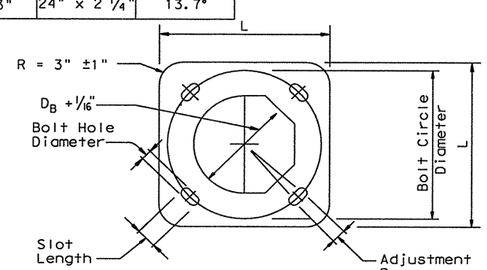

BASE PLATE PLAN

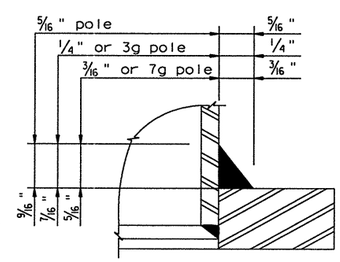

DETAIL D

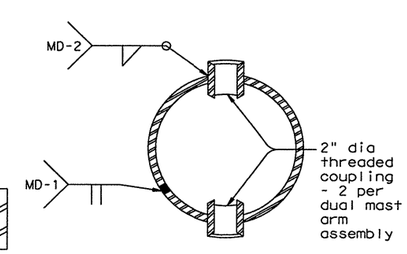

SECTION A-A

STANDARD PLANS
Texas Department of Transportation
Traffic Operations Division

TRAFFIC SIGNAL SUPPORT STRUCTURES MAST ARM POLE DETAILS

MA-D-00

© TxDOT August 1995

DN - MS	CK - JSY	DR - FDN	CK - CAL

REVISIONS	STATE DISTRICT	FEDERAL REGION	FEDERAL AID PROJECT	SHEET
7-96 8-99 10-00	LAREDO	6	NH-2002 (79)	697

COUNTY	CONTROL	SECTION	JOB	HIGHWAY
WEBB	0018	05	062, ETC	IH 35

MATERIALS	
Pole or Arm Simplex	ASTM A27 GR 65-35 or A148 GR 80-50 or A576 GR 1021 (4) or A36 (Arm only)
Arm Pipes	ASTM A53 GR A or B or A500 GR B or A501 or A595 (2) or A715 GR 50
Arm Plates (3)	ASTM A36 or A572 GR50 (1) or A595 GR A or A588
Misc.	ASTM designations as noted

(1) ASTM A36M50 steel as described in Item 442 "Metal for Structures" may be used in lieu of A 572 GR 50.

(2) If A595 GR A material is used, arm need not be cold worked to A595 requiremants, but material must have 40 ksi minimum yield prior to fabrication.

(3) Either of the materials listed for pates may be used where the drawings do not specify a particular ASTM designation.

(4) A576 must be suitable for forging and also meet minimum tensile strength of 65 ksi, minimum yield of 35 ksi, and elongation in 2 inches of 22 percent.

(5) Dimensional limits are given to show acceptable variation in design. All of a Fabricator's production of a particular arm length shall have the same dimensions within specified tolerances.

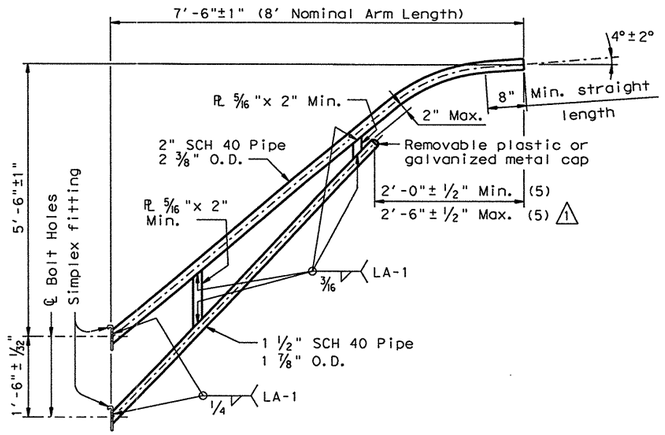

8-FOOT LUMINAIRE ARM

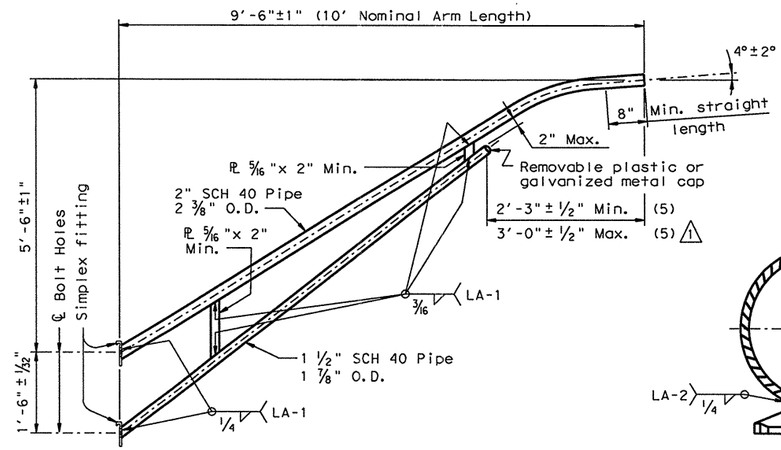

10-FOOT LUMINAIRE ARM

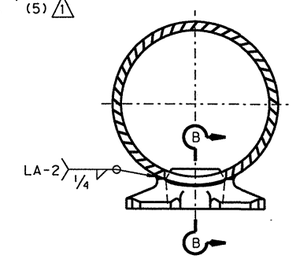

DIRECT ATTACHMENT DETAIL

GENERAL NOTES:

Design conforms to 1994 AASHTO Standard Specifications for Structural Supports for Highway Signs, Luminaires, and Traffic Signals and Interim Revisions thereto. Design Wind Speed equals 90 mph plus a 1.3 gust factor. Arms are designed to support a 75 lb. luminaire having an effective projected area (actual area times drag coefficient) of 1.5 sq. ft.

Materials and fabrication shall be in accordance with the Specificatons and with the details, dimensions, and weld procedures shown herein. Weld references call for preapproved weld procedures which the Fabricator must obtain prior to fabrication. In the absense of specified Fabricaton tolerances, dimensions shall be within the tolerances generally obtainable in normal fabrication practice.

Unless otherwise noted, all parts shall be galvanized after fabrication in accordance with the Specifications.

Special designs require submission of shop drawings in accordance with the item "Steel Structures".

Each pole simplex fitting shall be supplied with 2 A325 bolts and 2 lock washers of the size specified. The bolts and lock washers shall be secured to the pole with the other hardware items called for in the plans. When clamp attachment is specified, the Fabricator shall ship the clamp assembly securely attached to the pole at the location shown on the plans.

If clamp assemblies are ordered without poles, the Fabricator shall ship one upper and one lower clamp assembly together in a single package, including all nuts and washers required for the clamps and simplex fittings.

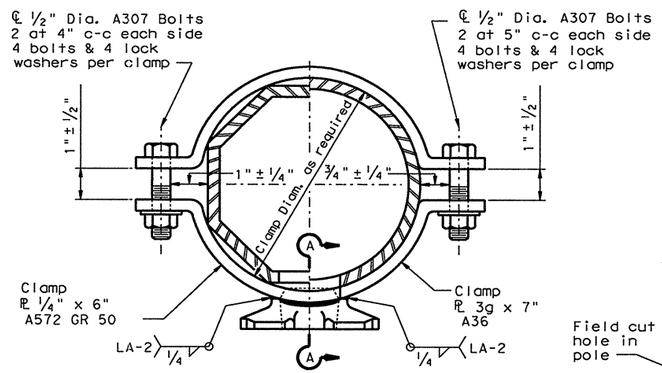

CLAMP ATTACHMENT DETAIL NO. 1
(HALF SECTION)

CLAMP ATTACHMENT DETAIL NO. 2
(HALF SECTION)

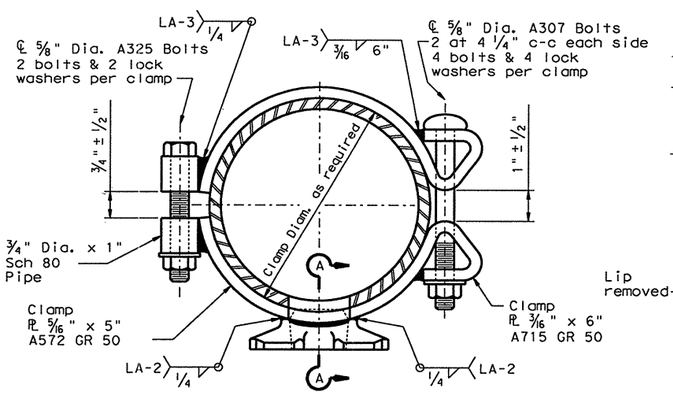

CLAMP ATTACHMENT DETAIL NO. 3
(HALF SECTION)

CLAMP ATTACHMENT DETAIL NO. 4
(HALF SECTION)

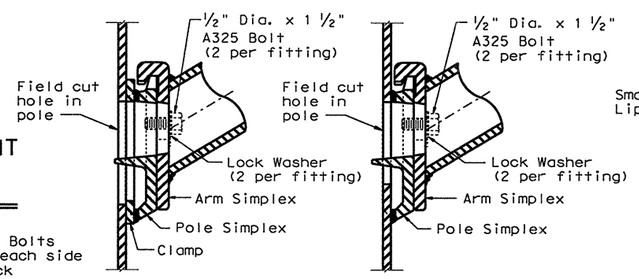

UPPER SIMPLEX FITTING

UPPER SIMPLEX FITTING

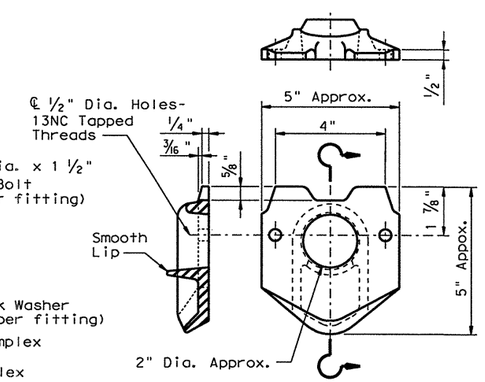

POLE SIMPLEX DETAIL

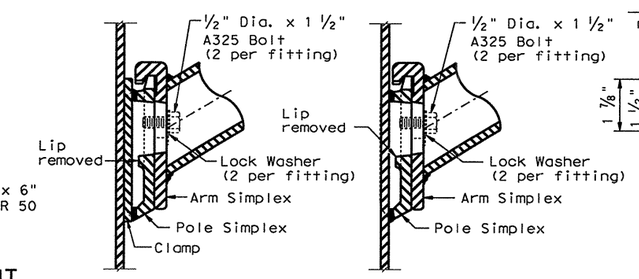

LOWER SIMPLEX FITTING

SECTON A-A

LOWER SIMPLEX FITTING

SECTON B-B

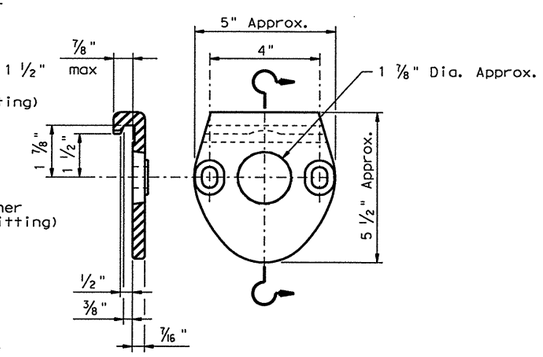

ARM SIMPLEX DETAIL

1 1-99 - minor typo correction

Texas Department of Transportation
Traffic Operations Division

STANDARD ASSEMBLY DRAWINGS FOR LUMINAIRE SUPPORT STRUCTURES

ARM DETAILS

LUM-A-99

FILE: lum-a.dgn	DN: LEH	CK: JSY	DW: LTT	CK: TEB	STD:
©TxDOT August 1995	DIST	FED REG	FEDERAL AID PROJECT •		SHEET
REVISIONS 5-96 1-99	LAREDO	6	NH-2002 (79)		698
	COUNTY		CONTROL	SECT	JOB	HIGHWAY
	WEBB		0018	05	062. ETC	IH 35

SERVICE ENCLOSURE NOTES

VIII. Service Assembly Enclosures. All service assemblies and enclosures shall be UL Listed for the intended purpose.

A. Shop built or shop assembled service assemblies (all types except Type T and Type D without lighting contactor or enclosure mounted photo cell) and all auxilliary equipment enclosures mounted with service equipment and paid for as part of Item 628, "Electrical Services", shall be built or assembled by a UL Listed Industrial Control Panel shop and shall have a unique serial numbered UL Label with the words "LISTED ENCLOSED INDUSTRIAL CONTROL PANEL". The same or an additional label shall have the name, location, and phone number of the shop, the UL file number of the shop, the shop order or drawing number, date of manufacture or assembly, and the line voltage. The service assembly enclosure shall also be labeled "SUITABLE ONLY FOR USE AS SERVICE EQUIPMENT".

B. Conduit entries into the top of enclosures shall have threaded hub. Conduit entries through the equipment mounting back plate will not be allowed.

C. All service enclosure front doors shall be permanently labeled "DANGER HIGH VOLTAGE". Label shall be a self sticking type, intended for outdoor installation. Lettering style, layout and colors of red, black and white shall be as required by OSHA. Label letters shall be 1 to 1 1/2 inches high or as high as the enclosure door width will permit for smaller services. Separate or auxiliary lighting enclosures need not be OSHA labeled when mounted in the same viewing plane as the service enclosure front door. Where only one type of load is served by the service, the service door shall be marked using duo-colored plastic labels or self adhesive vinyl weather resistant labels, minimum of 1 inch high; applied in a neat and workmanlike manner. On the label will be the service number shown on the plans as well as identifying the load served specifically (i.e. lighting, landscaping, signals, traffic management or other wording as directed by the Engineer). Safety switches need not be OSHA labeled unless specifically required by the serving utility.

D. Type GS enclosures will only be allowed for service Types D and T without an enclosure mounted photocell and/or lighting contactor and the Type C panelboard. This spec will allow an "off the shelf" product meeting these specifications to be used. Type GS enclosures shall be made from pre-galvanized steel sheeting, hot dipped galvanized steel, or powder coat painted steel unless shown differently on the plans. Steel enclosures shall be painted inside and outside; galvanized enclosures may be painted. Unless otherwise approved by the Engineer, painted enclosures shall be gray, beige, white or light green. Panelboard/loadcenter enclosures shall meet UL type 3R requirements, shall have a dead front trim, and an outer padlockable door preventing unauthorized persons from operating contained equipment. Galvanized steel is no longer allowed for Types A,C,or custom-built D or T enclosures. If GS is shown in the descriptive code for any of these, an AL shall be provided.

E. Type AL enclosures for service Types A and C shall meet UL type 3R requirements and shall also meet additional requirements of this paragraph. The enclosure shall have both a main disconnect remote operator handle and a door latch handle. Die-cast handles are not acceptable. The main disconnect remote operator shall be flange-mounted, shall interlock the door when in the "on" position, and shall be padlockable in both the "on" or "off" positions. Door latch shall latch at two or more points, operate by a handle separate from disconnect switch and be capable of being locked. Door closure clamps will not be allowed. Lock must be keyed to Master #2195. All the enclosures shall have either a continuous stainless steel piano hinge with stainless steel pin or enclosures less than 30 inches may have two heavy duty hinges, those over 30 inches must have three. Heavy duty two and three point hinges shall have a 0.185 inch minimum diameter electro-zinc plated steel pin or a stainless steel pin. Two point hinged doors shall be rated for 56 lbs of loading. Three point hinged doors shall be rated for 70 lbs of loading. The door shall have an attached data pocket constructed of either thermoplastic or metal. Pocket shall be 12" x 12", unless that size will not fit in enclosure. The pocket shall then be as large as possible, as approved by the Engineer, and mechanically attached with stainless steel nuts and bolts, or stainless steel or aluminum rivets. Enclosure shall include an equipment mounting panel installed inside the enclosure on collar studs or tapped bosses, and constructed of a minimum 12 guage galvanized steel. Equipment mounting panels shall not be painted. Enclosure shall have factory installed external mounting feet. Enclosure door shall be capable of opening at least 130 degrees, with arm or other approved means to hold the door open. Only the enclosure exterior will be primed and painted. Paint color shall be beige or gray and shall be powder coat paint as shown below. Condensation drainage shall be provided in the bottom of the enclosure before leaving the factory. The Contractor shall prepare and submit a schematic drawing unique to an individual service. The approved drawing shall be laminated and placed in the document pocket of the service at the time of shipment to the job site. All applicable wiring diagrams and plan sheet layouts for all equipment and branch breaker circuits supplied by that service shall also be laminated and placed in the document pocket prior to shipping. Type AL enclosures for Type D and T services with enclosure mounted photocell and/or lighting contactor shall have the loadcenter interior mounted in an enclosure with properly adapted dead front trim. Types D and T shall not have a loadcenter exterior "can" mounted inside another enclosure meeting these specifications. (Do not put one enclosure inside another enclosure). Types D and T with enclosure mounted photocell and/or lighting contactor shall meet the additional requirements of this paragraph except that remote-operating handle will not be provided.

F. Type SS enclosures for Type A and C shall meet all the requirements above for their respective type AL. Type SS enclosures for D and T shall meet all the requirements above for their respective type AL. Stainless Steel shall not be painted.

G. PS enclosure shall be as detailed and specified on ED(8). Galvanized steel will not be allowed for any pedestal service. If GS is shown in the descriptive code an AL will be provided.

IX. Powder Coat Paint. Powder coating shall be either a polyester thermosetting resin, a zinc rich primer with a TGIC (triglycidyl isocyanurate) powder overcoating, or a zinc-rich epoxy powder, applied by either electrostatic spray or fluidized bed immersion, high temperature oven cured, high density, low gloss, 4 mil thick (minimum), coating. Adhesion shall meet the 5A or 5B classifications of ASTM D3359. Finish shall be uniform in appearance and free of scratches.

X. Main Disconnect. Main disconnect device shall be a circuit breaker, as specified in the Electrical Service Data, shall be two or three pole, and rated for the voltage and amperage specified. Circuit breaker shall be an UL Listed thermal-magnetic circuit breaker controlled by flange-mounted remote operator in the service assembly enclosure when required. Circuit breakers shall have a minimum interrupting rating of 10,000 Amps. When the utility company provides a transformer larger than 50 KVA, Contractor shall verify that the available fault current is less than the circuit breaker amps interrupting capacity (AIC) rating and shall provide documentation from the Utility to the Engineer. Documentation shall be submitted at the same time as other electrical submittals. Circuit breaker shall be UL Listed to UL489. No backfed breakers will be allowed for use as a main disconnect.

XI. Control Circuit. Control circuit protection shall be 15 amp circuit breaker.

XII. Control Station ("H-O-A" Switch). Control station shall be a maintained-contact, three position selector switch in an UL type enclosure. Switch shall be rated 600 volts and shall be fitted with "Hand-Off-Auto" legend.

XIII. Photo Electric Control. Photo electric control shall consist of a photocell, internal lightning arrester, and relay or bimetallic switch mounted inside a weatherproof enclosure with standard 3-prong twist lock photocell plug and receptacle. The enclosure shall be made of poly-acrylic with clear acrylic window. Enclosure chassis shall be molded thermosetting plastic. The photocell shall have a polyethylene gasket, and shall have a hermetically sealed cadmium sulfide cell. The arrester shall have an enclosed type expulsion arrester rated 2.0 kV sparkover with 5,000 amps follow-through. Relay or switch shall be time delay type with normally closed contacts. Photo electric control shall be rated a minimum of 1800 VA, voltage as required. Enclosure mounted photocells shall be the same as above except that the photocell shall be mounted inside the enclosure. The enclosure shall have two acrylic paned windows, or other material approved by the Engineer, one on each side of the enclosure. Each window shall be rectangular approximately one inch by two inches, round 2 inch diameter, or as otherwise approved by the Engineer. Bracket and photocell's receptacle will be mounted inside enclosure next to each window. Except for window side, 2" of clearance is required on all sides of photocell for ease of replacement. The photocell's receptacle is held in place by two mounting screws on bracket and located next to each window of the enclosure. The 3-prong twist lock photocell shall be mounted in a position to receive light from the window closest to the photocell. The photocell shall be mounted in a position to receive light from one window. Top of pole mounted photocells shall be mounted as shown on ED(4). The Contractor shall be responsible for proper operation of the photo-electric control. The Contractor shall move and/or adjust or shield the photocell from stray or ambient nighttime light or shall make any other adjustments required for proper operation. The photocell shall face North when practicable. Unless otherwise shown on the plans, the photocell shall turn on the illumination system at 1.0 +(-) 0.5 footcandle and turn off the illumination system at two footcandles higher than turn on.

XIV. Lighting Contactor. Lighting contactor shall be a UL Listed NEMA rated lighting contactor, two-pole or multipole as required, electrically held type designed to control high pressure sodium lighting loads, with silver alloy double break contacts rated at 240 volts, 480 volts or 600 volts as required. Lighting contactor shall not be the DIN rail mounted type.

XV. Power Distribution Terminal Blocks. Power distribution terminal blocks shall be rated for 600 volts and shall be used for line side connections to branch circuit breakers where more than one circuit breaker is required. Lugs on blocks shall be properly sized for conductors being used. Only one conductor shall be placed under each lug.

XVI. Neutral/Ground Bus. Neutral/ground bus shall be a factory made bus permanently bonded to the enclosure with properly sized lugs for grounding and neutral conductors.

SCHEMATIC LEGEND

1 - Safety Switch (when required)
2 - Meter (when required)
3 - Service Assembly Enclosure
4 - Main Disconnect Breaker (See Electrical Service Data)
5 - Omit
6 - Circuit Breaker, 15Amp
7 - Auxiliary Enclosure
8 - Control Station ("H-O-A" Switch)
9 - Photo Electric Control (enclosure-mounted shown)
10 - Lighting Contactor
11 - Power Distribution Terminal Blocks
12 - Neutral/Ground Bus
13 - Branch Circuit Breaker (See Electrical Service Data)
14 - Circuit Breaker Panelboard (See Electrical Service Data) (If Type C is shown as AL or SS on descriptive code, this is the service assembly enclosure only. Panelboard enclosure is GS unless otherwise noted.
15 - Load Center

——— Power Wiring
- - - - - Control Wiring
—N— Neutral Conductor (when required) serve 120 v. loads only)
—G— Equipment grounding conductor-always required

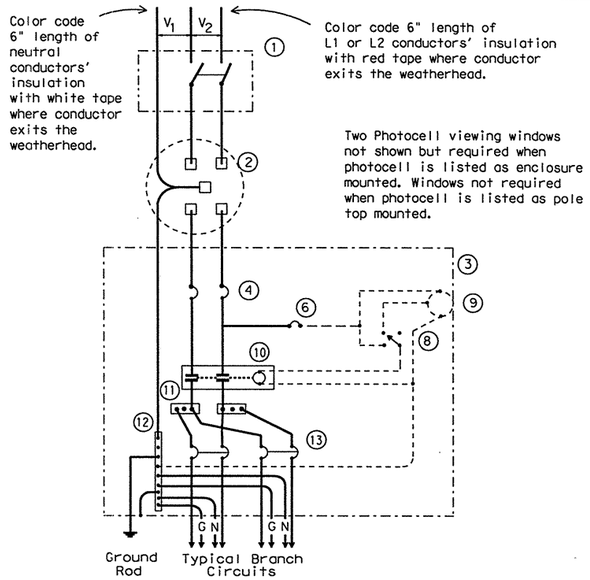

SCHEMATIC TYPE A
THREE WIRE

Maximum feeder circuit size (High Mast Poles): 100 amps for two pole 480V, 125 amps for one or two pole 120V or 240V. Maximum branch circuit size: 50 amps.

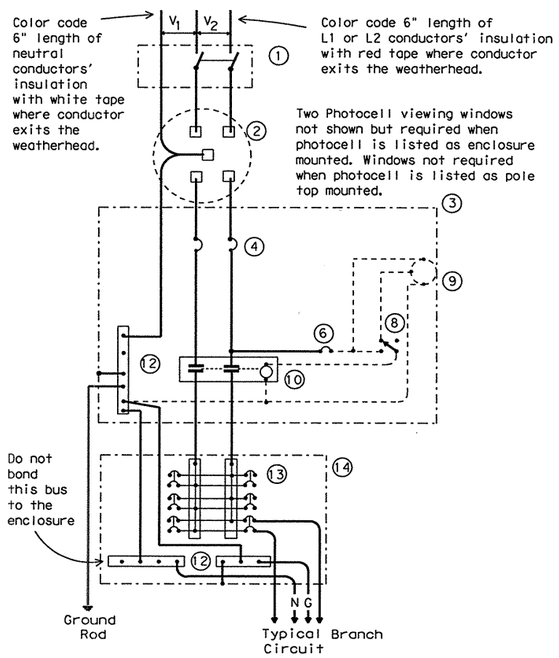

SCHEMATIC TYPE C
THREE WIRE

Maximum feeder circuit size (High Mast Poles): 100 amps for two pole 480V, 125 amps for one or two pole 120V or 240V. Maximum branch circuit size: 50 amps.

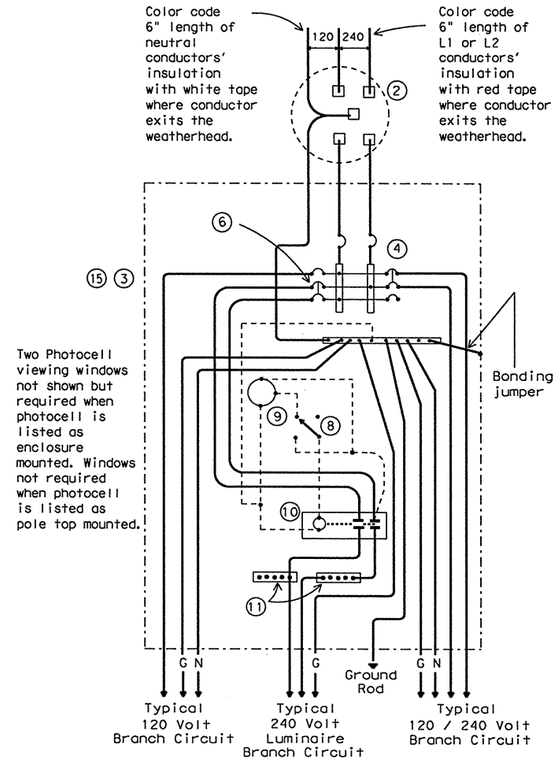

SCHEMATIC TYPE D
120/240 VOLTS - THREE WIRE

Install photocell and lighting contactor when shown on Electrical Service Data. See Type D service notes.

TYPE D SERVICE NOTES

Photocell and lighting contactor shall be located either in the same UL type 3R enclosure with load center or, if approved by Engineer, in separate enclosure. There shall be a window on each side of enclosure to allow operation of photocell. Both photocell contactor and breaker area shall have dead front trim. Enclosure, except for RT and PS supports, shall not exceed 36 inches in height or 16 inches in width unless approved by the Engineer. Ty D load center with lighting controls or TY D separate lighting control enclosure shall have power distribution blocks for a minimum of 4, #8 conductors per phase.

STANDARD PLANS
TEXAS DEPARTMENT OF TRANSPORTATION
Traffic Operations Division

ELECTRICAL DETAILS- SERVICE ENCLOSURE & NOTES

ED(5)-03

©TxDOT April 1998			DN-KB	CK-JW	DW-DN	CK-GC	MEG NO.:
REVISIONS 12-00 3-03	STATE DISTRICT	FEDERAL REGION	FEDERAL AID PROJECT				SHEET
	LAREDO	6	NH-2002 (79)				699
	COUNTY			CONTROL	SECTION	JOB	HIGHWAY
	WEBB			0018	05	062, ETC	IH 35

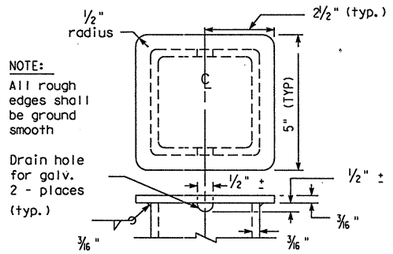

TOP OF POLE
TYPE SF & SP

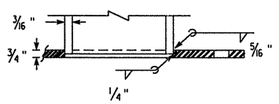

BOTTOM OF POLE
TYPE SF & SP

Color code 6" of grounded neutral conductors insulation with white tape where conductor exits the weatherhead.
Color code 6" of L1 or L-2 Hot-ungrounded conductors insulation with red tape where conductor exits the weatherhead.
Conductor free length, 12" min., 18" max.

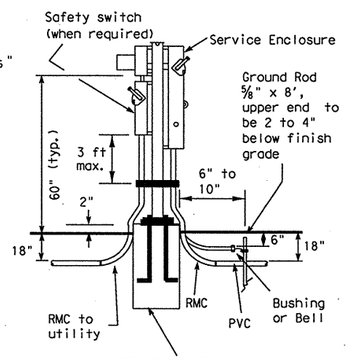

SERVICE SUPPORT
TYPE SP (U)
UNDERGROUND SERVICE
WITH SAFETY SWITCH

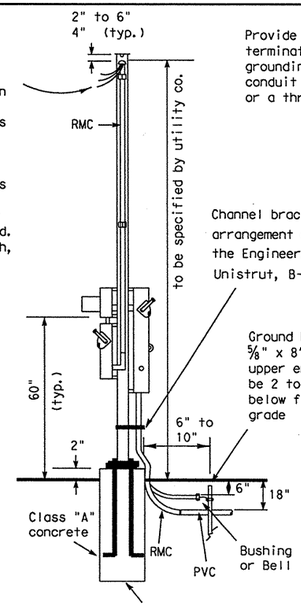

Provide grounding bushings on all metal conduits, terminate bonding jumpers (min. #6 AWG. Copper) to grounding bus. Grounding bushing not required when conduit end is fitted with a conduit sealing hub or a threaded type of boss such as a meter hub.

SERVICE SUPPORT
TYPE SP (O)
OVERHEAD SERVICE
WITH SAFETY SWITCH

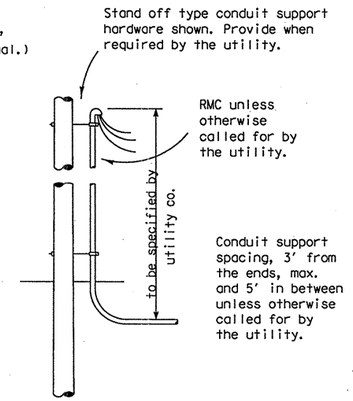

UNDERGROUND RISER
AT UTILITY POLE
(for underground service)

NOTES:

1. Support Type SP and SF: Fabricated from 4" x 4" x 3/16 " square structural tubing, ASTM A500 Grade A or G or equal. Base plate shall be 3/4 " plate, ASTM A36 or equal. All equipment and conduit shall be mounted on galvanized channel strut, 1 1/2 " x 1 5/8 " x 12 guage galvanized steel channel (Unistrut, Kindorf, B-line or equal) clamped with channel hardware, bolted or welded to vertical member as approved by the Engineer.
2. Paint field cut ends of all channels with zinc-rich paint.
3. All Steel Poles (SP and SF) shall be hot-dip galvanized after fabrication. Poles for overhead service shall be fitted with eyebolt or similar fitting, as approved by the utility company, for attachment of sevice drop to the pole.
4. All conduit and conductors attached to the electrical service and within 12 inches of the electrical service will not be paid for directly, but shall be subsidiary to the electrical service. All conduit and conductors from the utility company pole to the point 12 inches from the electrical service, including conduit and conductors required for the utility pole riser when furnished by the Contractor, will be paid for separately.
5. All mounting hardware and installation details of services shall be in accordance with utility company specifications.
6. Anchor bolts for underground service supports shall be 3/4" x 18" x 4" (dia. x length x hook length). Anchor bolts for overhead services shall be 3/4" x 56" x 4". Anchor bolts shall be provided with leveling nuts.
7. Conduit for grounding electrode conductor (ground rod wire) shall be 1/2" PVC. All other conduit on electrical services shall be rigid metal conduit. Service entrance conduit size shall be as shown elsewhere. Conduit for branch circuit entry to enclosure shall be the same size as that shown on the layout sheets for branch circuit conduit. Rigid metal conduit shall extend to the rigid metal elbow and then be coupled to the type conduit shown on the layout for that particular branch circuit. RMC shall have grounding bushings in enclosures.
8. If pole is painted, each separate painted piece shall have a bonding jumper attached to a tapped hole.
9. Sheet metal screws are not allowed for bonding. Provide 1/4-20 machine screws. Remove all non-conductive material at contact points. Terminate bonding jumper using listed device. Bonding jumper min. #6 AWG Copper. Make up all threaded bonding connections wrench tight.
10. Conduits entering enclosure from underground shall be sealed at both ends. Silicone sealant will not be allowed.
11. Ground rod clamp to be Blackburn GG 5/8H, Weaver w5/8 or equal.
12. Service entrance conductors shall exit separately bushed non-metallic openings in weatherhead.
13. Free conductor at weatherhead to be 12 in. min., 18 in. max., or as required by utility. Color code grounded-neutral conductor with white tape covering 6 in. of conductor. Color code L1 or L2 Hot un-grounded conductor with red tape covering 6 in. of conductor. Service drop and service entrance conductors must not contact metal pole in such a manner as to result in abrasion of insulated conductors.
14. Conduit support spacing to be max. 3 ft. from ends, and max. 5 ft. in between.
15. Shop drawings are not required for service support structure unless specifically stated elsewhere or as directed by the Engineer.
16. Service enclosure to be labeled as specified on ED(5) VIII C.
17. Liquidtight flexible metal conduit (LFMC) may be used between the meter and service enclosure when they are mounted 90 to 180 degrees to each other. LFMC shall be the same size as service entrance conduit. LFMC shall not exceed 3 ft. and shall be securely supported within one foot of each end. LFMC shorter then 12" need not be strapped. Each end of LFMC must have a grounding bushing or be terminated with a grounding fitting. A neutral conductor must be installed within the LFMC. Bend in LFMC shall not exceed 180 degrees.
A pull test is required on all installed conductors, at least six inches of free conductor movement shall be demonstrated to the satisfaction of the Engineer.

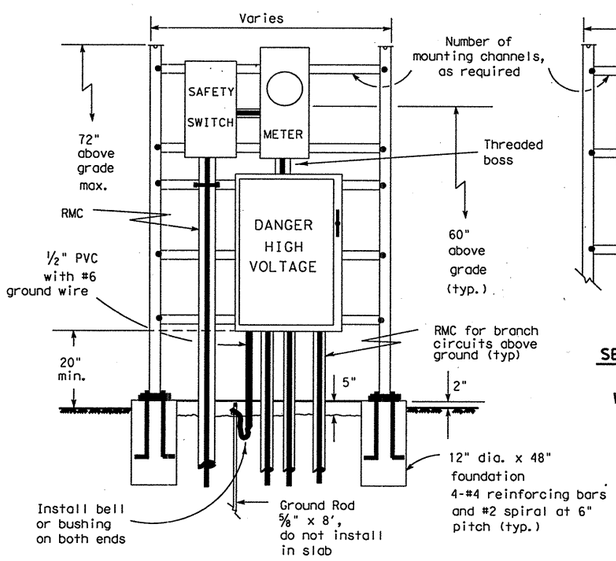

SERVICE SUPPORT TYPE SF (U)
UNDERGROUND SERVICE
WITH SAFETY SWITCH
(Typical Arrangement)

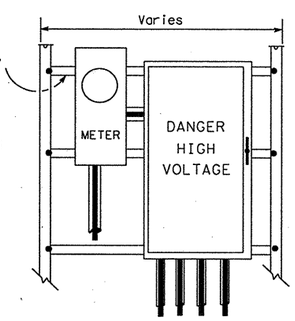

SERVICE SUPPORT TYPE SF (U)
UNDERGROUND SERVICE
WITHOUT SAFETY SWITCH

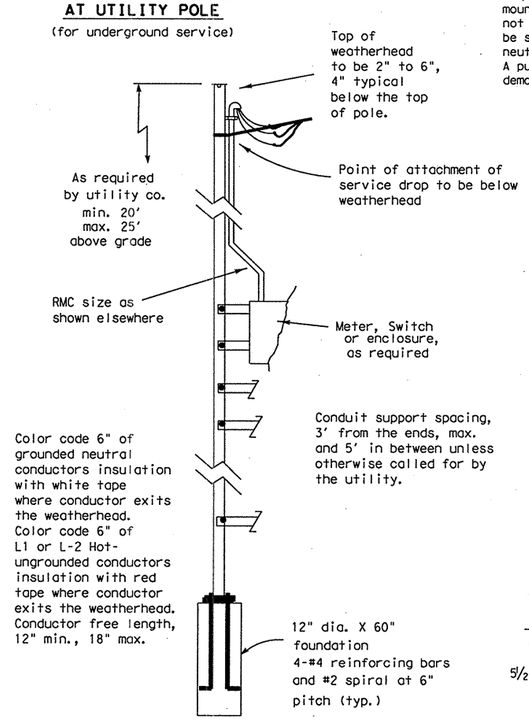

SERVICE SUPPORT TYPE SF (O)
OVERHEAD SERVICE

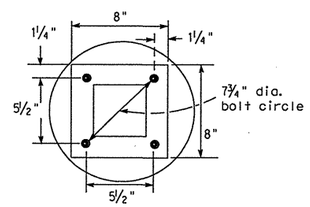

BASE PLATE DETAIL
TYPE SF & SP

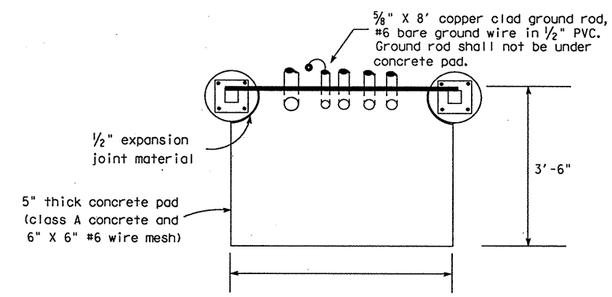

SERVICE SUPPORT TY SF (O) & SF (U)
TOP VIEW

STANDARD PLANS
TEXAS DEPARTMENT OF TRANSPORTATION
Traffic Operations Division

ELECTRICAL DETAILS- SERVICE SUPPORT TYPES SF & SP

ED(6)-03

©TxDOT January 1992	DN-KB	CK-JW	DW-DN	CK-GC		MSG NO.:
REVISIONS 10-93 4-98 12-00 3-03	STATE DISTRICT	FEDERAL REGION	FEDERAL AID PROJECT			SHEET
	LAREDO	6	NH-2002 (79)			700
	COUNTY		CONTROL	SECTION	JOB	HIGHWAY
	WEBB		0018	05	062. ETC	IH 35

NOTES:

1. Luminaire conductors shall not be looped through controller cabinet.
2. Electrical system to include an equipment grounding conductor noted here as "G". All exposed metal parts are to be bonded to grounding conductor.
3. Photocell, when required, shall be mounted at top of pole or in enclosure as shown on ED(4) and ED(5) and as required by descriptive code.
4. Roadway lighting fixtures, when required, shall be in accordance with the material and construction methods of the Item, "Roadway Illumination Assemblies" except for the test period for proper operation of the luminaires. Installed roadway lighting luminaires and internally lighted street name signs shall be tested for proper operation as a part of the associated traffic signal system.
5. Internally lighted street name signs (ILSN), when required, shall be in accordance with the Item "Internally Lighted Street Name Signs". Because of the electrical isolation of ILSN hinges, a #12 green grounding conductor shall be run to the ILSN fixture.
6. Install ground rod at alternate location when directed by the Engineer. Maintain a minimum of 8 ft in contact with the earth.
7. Liquidtight flexible metal conduit (LFMC), may be used when meter and service enclosure are mounted 90 to 180 degrees to each other. LFMC shall be same size as service entrance conduit. LFMC shall not exceed 3 ft. and shall be securely supported within one foot of each end. No strap required for a LFMC shorter than 12". Each end of LFMC must have a grounding bushing or be terminated with a grounding fitting. A neutral conductor must be installed within the LFMC. Bend in liquidtight flexible metal conduit shall not exceed 180 degrees.
8. Minimum embedment depth as per Item 627 Treated Timber Poles.
9. Pole to be set plumb.
10. Back fill thoroughly tamped in 6 in. lifts. Place 6 inches additional backfill above grade around pole base to allow for settling, as per Item 627.
11. Excess pole length shall be trimmed from the top at a slope to aid water run off.
12. Gain pole two places for each meter, service, separate or auxiliary enclosure. See ED(4) for details.
13. All illumination and power conductors to be pull tested and megged. Do not meg traffic signal cable.
14. Enclosures are to be locked, and ground box covers are to be bolted before power is applied to the circuit.
15. Conduits entering top of enclosures to be fitted with conduit sealing hub or threaded boss, such as meter hub. Off-set nipple, when required, shall not be zinc-die-pressure cast. All metal conduits not connected to conduit sealing hub, or threaded boss must have a grounding bushing. Terminate bonding jumper to ground bus. All conduits entering enclosures shall be sealed. Silicone shall not be allowed.

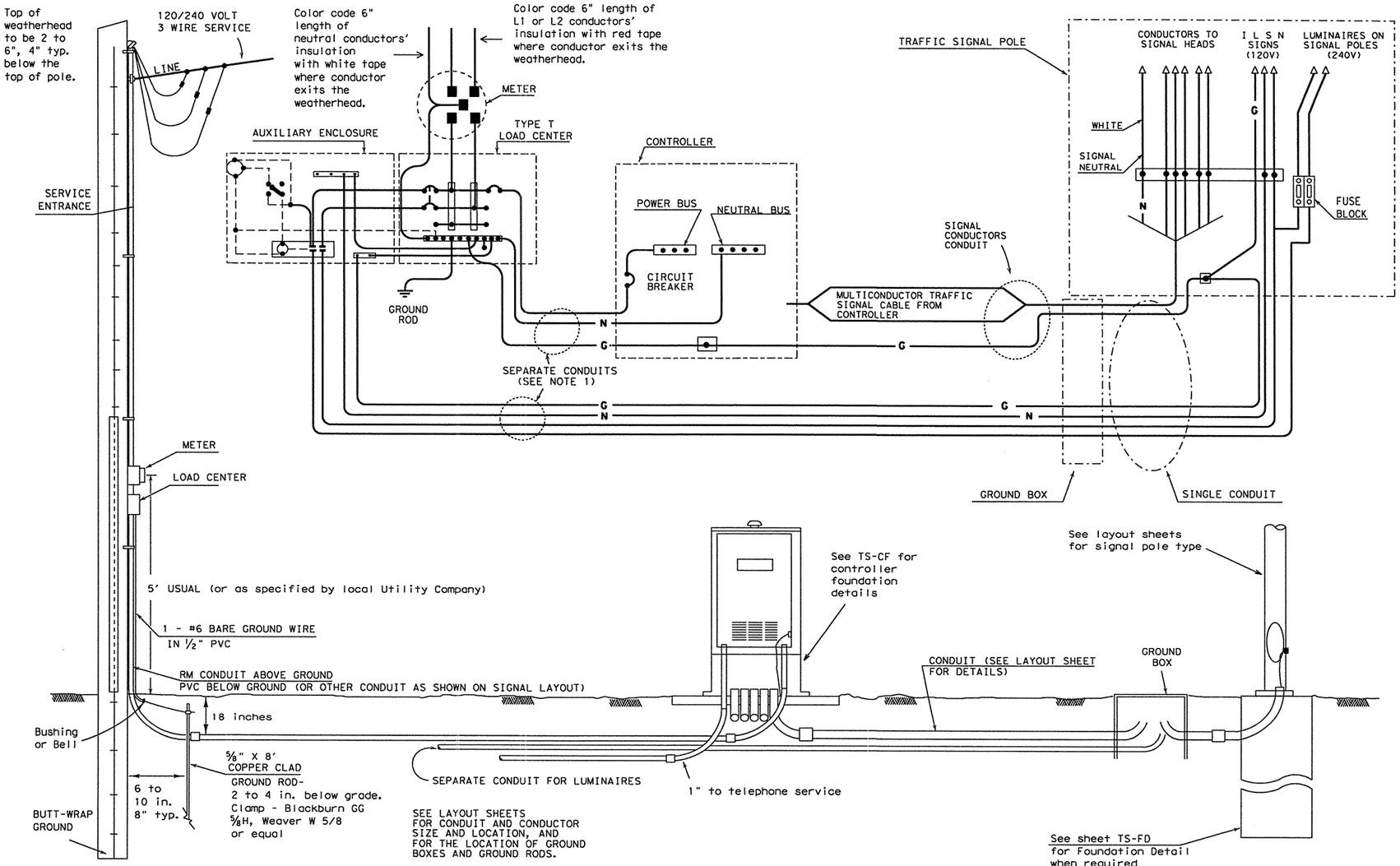

ELECTRICAL SERVICE

(TYPE T TIMBER POLE SHOWN AS EXAMPLE, SEE ELECTRICAL DETAILS, LAYOUT SHEETS, AND ELECTRICAL SERVICE DATA SHEET FOR SERVICE REQUIRED AND FOR DETAILS.)

SIGNAL CONTROLLER

SIGNAL POLE

Unless shown elsewhere in the plans, electrical service data for Types D and T shall be as follows.

ELECTRICAL SERVICE DATA

ELECTRICAL SERVICE DESCRIPTION (SEE ED(4))	SERVICE CONDUIT SIZE (RMC)	SERVICE CONDUCTORS NO./SIZE	SAFETY SWITCH AMPS	MAIN DISCONNECT CKT. BRK. POLE/AMP	TWO-POLE CONTACTOR AMPS ***	PANELBD./ LOADCENTER AMP RATING (MIN)	CIRCUIT NO.	BRANCH CKT. BRK. POLE/AMPS	KVA LOAD
TY D (120/240)070(NS)AL(E)**(*)	1½	3/#4	N/A	2P/70	30	100	T.S. Lighting	1P/50 2P/15	<7.1
TY T (120/240)000(NS)GS(E)**(*)	1½	3/#4	N/A	None	30	70	T.S. Lighting	1P/50 2P/15	<7.1

*** Eliminate photocell, contactor and seperate enclosure if lighting, or internally lighted signs are not required by plans
** See descriptive code in estimate for service support type.
* See descriptive code in estimate for overhead or underground service.

STANDARD PLANS
TEXAS DEPARTMENT OF TRANSPORTATION
Traffic Operations Division

ELECTRICAL DETAILS- TYPICAL TRAFFIC SIGNAL SYSTEM DETAILS

ED(7)-03

©TxDOT January 1992

DN - KB	CK - JW	DW - DN	CK - GC	MEG NO. 1

REVISIONS	STATE DISTRICT	FEDERAL REGION	FEDERAL AID PROJECT	SHEET
10-93 4-98 12-00 3-03	LAREDO	6	NH-2002 (79)	701

COUNTY	CONTROL	SECTION	JOB	HIGHWAY
WEBB	0018	05	062, ETC	IH 35

FOUNDATION DESIGN TABLE

FDN TYPE	DRILLED SHAFT DIA	REINFORCING STEEL: VERT BARS	REINFORCING STEEL: SPIRAL & PITCH	DRILLED SHAFT LENGTH-ft (4), (5), (6): TEXAS CONE PENETROMETER N blows/ft: 10	15	40	ANCHOR BOLT DESIGN (1): ANCHOR BOLT DIA	Fy (ksi)	BOLT CIR DIA	ANCHOR TYPE	FOUNDATION DESIGN LOAD (2): MOMENT K-ft	SHEAR Kips	TYPICAL APPLICATION
24-A	24"	4- #5	#2 at 12"	5.7	5.3	4.5	¾"	36	12 ¾"	1	10	1	Pedestal pole, pedestal mounted controller.
30-A	30"	8- #9	#3 at 6"	11.3	10.3	8.0	1 ½"	55	17"	2	87	3	Mast arm assembly. (see Selection Table)
36-A	36"	10- #9	#3 at 6"	13.2	12.0	9.4	1 ¾"	55	19"	2	131	5	Mast arm assembly. (see Selection Table) 30' strain pole with or without luminaire.
36-B	36"	12- #9	#3 at 6"	15.2	13.6	10.4	2"	55	21"	2	190	7	Mast arm assembly. (see Selection Table) Strain pole taller than 30' & strain pole with mast arm
42-A	42"	14- #9	#3 at 6"	17.4	15.6	11.9	2 ¼"	55	23"	2	271	9	Mast arm assembly. (see Selection Table)

FOUNDATION SELECTION TABLE FOR STANDARD MAST ARM PLUS ILSN SUPPORT ASSEMBLIES (ft)

		FDN 30-A	FDN 36-A	FDN 36-B	FDN 42-A
80 MPH DESIGN WIND SPEED	MAX SINGLE ARM LENGTH	32' (1)	48'		
	MAXIMUM DOUBLE ARM LENGTH COMBINATIONS	24' X 24'			
		28' X 28'			
		32' X 28'	32' X 32'		
			36' X 36'		
			40' X 36'		
			44' X 28'	44' X 36'	
100 MPH DESIGN WIND SPEED	MAX SINGLE ARM LENGTH	(1)	36'	44'	
	MAXIMUM DOUBLE ARM LENGTH COMBINATIONS		24' X 24'		
			28' X 28'		
			32' X 24'	32' X 32'	
				36' X 36'	
				40' x24'	40' X 36'
					44' x 36'

EXAMPLE:

1. For 80mph design wind speed, foundation 30-A can support up to a 32' arm with another arm up to 28'
2. For 100mph design wind speed, foundation 36-A can support a single 36' mast arm.

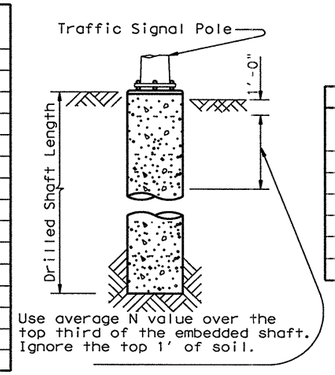

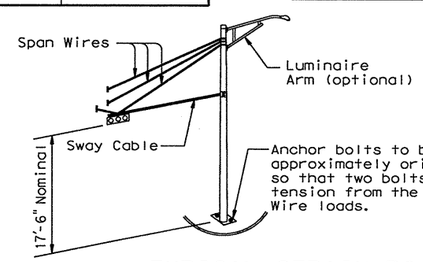

TYPICAL STRAIN POLE ASSEMBLY

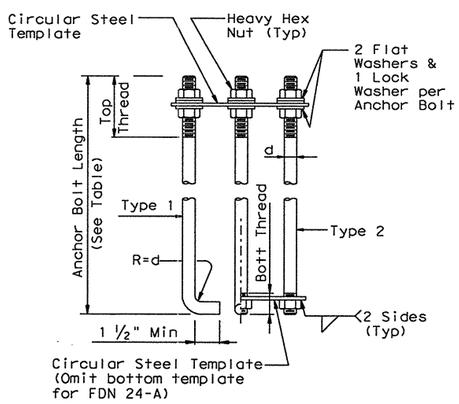

HOOKED ANCHOR (TYPE 1) **NUT ANCHOR (TYPE 2)**

ANCHOR BOLT ASSEMBLY

INSTALLATION PROCEDURE:

Threads of anchor bolts shall be coated with pipe joint compound prior to installation of upper nuts when erecting pole. After pole is plumbed and in permanent alignment, the exposed threads of painted bolts shall be cleaned and an additional coating of zinc-rich paint applied to seal the bolt thread-nut joint.

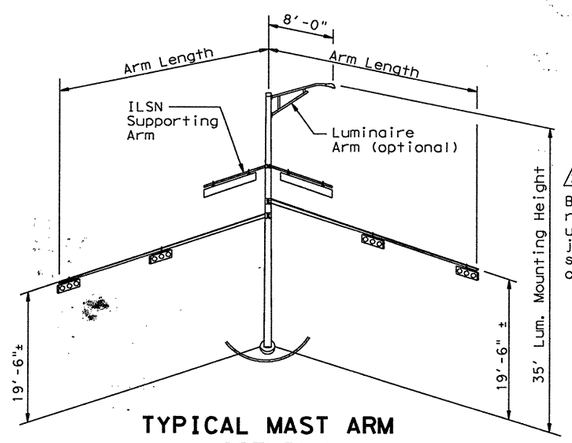

TYPICAL MAST ARM ASSEMBLY

NOTES:

(1) Anchor bolt design develops the foundation capacity given under Foundation Design Loads.

(2) Foundation Design Loads are the allowable moments and shears at the base of the structure.

(3) Foundations may be listed seperately or grouped according to similarity of location and type. Quantities are for the Contractor's information only.

(4) Field Penetrometer readings at a depth of approximately 3 to 5 feet may be used to adjust shaft lengths.

(5) If rock is encountered, the Drilled Shaft shall extend a minimum of two diameters into solid rock.

(6) Decimal lengths in Design Table are to allow interpolation for other penetrometer values. Round to nearest foot for entry into Summary Table.

ANCHOR BOLT & TEMPLATE SIZES						
BOLT DIA IN.	(7) BOLT LENGTH	TOP THREAD	BOTT THREAD	BOLT CIRCLE	R2	R1
¾"	1'-6"	3"	—	12 ¾"	7 ⅛"	5 ⅝"
1 ½"	3'-4"	6"	2"	17"	10"	7"
1 ¾"	3'-10"	7"	2 ¼"	19"	11 ¼"	7 ¾"
2"	4'-3"	8"	2 ½"	21"	12 ½"	8 ½"
2 ¼"	4'-9"	9"	3"	23"	13 ¾"	9 ¼"

(7) Min dimensions given, longer bolts are acceptable.

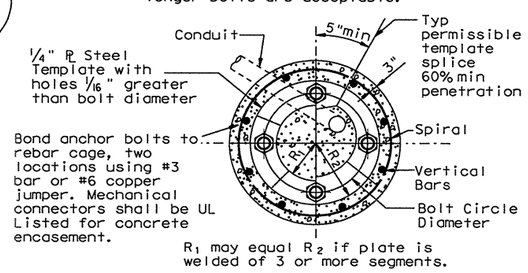

TOP VIEW

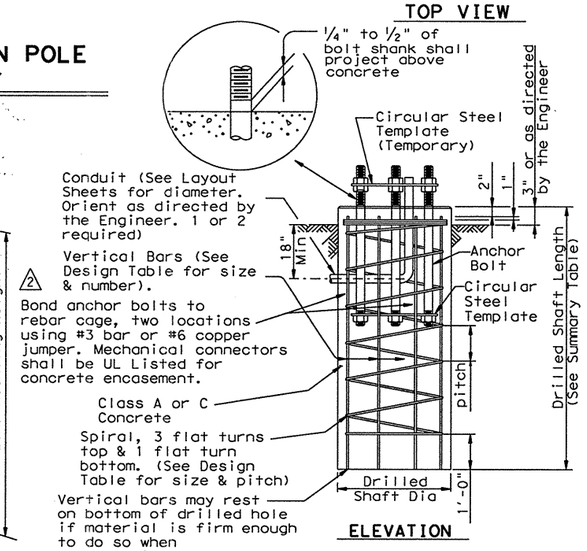

ELEVATION

FOUNDATION DETAILS

FOUNDATION SUMMARY TABLE (3)

LOCATION IDENTIFICATION	AVG. N BLOW /ft.	FDN TYPE	NO. EA	DRILLED SHAFT LENGTH (6) (FEET): 24-A	30-A	36-A	36-B	42-A
UNIROYAL								
POLE #1	10	36-A	1			14		
POLE #2	10	36-B	1				16	
POLE #3	10	36-A	1			14		
POLE #4	10	36-B	1				16	
POLE #5	10	36-B	1				16	
POLE #6	10	36-A	1			14		
POLE #7	10	24-A	1	6				
TOTAL DRILLED SHAFT LENGTHS				6		42	48	

GENERAL NOTES:

Design conforms to 1994 AASHTO Standard Specifications for Structural Supports for Highway Signs, Luminaires and Traffic Signals and interim revisions thereto.

Reinforcing steel shall conform to Item 440.

Concrete shall be Class A or C.

Threads for anchor bolts and nuts shall be rolled or cut threads of unified national coarse thread series except for A193B7 bolts which shall have 8 pitch thread series. Bolts and nuts shall have Class 2A and 2B fit tolerances. Galvanized nuts shall be tapped after galvanizing.

Anchor bolts that are 1" in diameter or less shall conform to ASTM A36. Anchor bolts larger than 1" in diameter shall conform to A36M55 in accordance with the Item, "Anchor Bolts" or ASTM A193B7 or A687. Galvanize or coat with zinc-rich paint a minimum of the upper 14 inches of all anchor bolts unless otherwise noted. Exposed nuts shall be galvanized or coated with zinc-rich paint. Washers shall be galvanized. Templates and embeded nuts need not be galvanized.

11/99 Revision

(1) Changed to Facilitate new terminal strip enclosure

(2) Changed from ground rod to UFER ground

STANDARD PLANS
Texas Department of Transportation
Traffic Operations Division

TRAFFIC SIGNAL POLE FOUNDATION

TS-FD-99

© TxDOT August 1995 DN - MS CK - JSY DW - MAO/MMF CK - JSY/TEB

REVISIONS	STATE DISTRICT	FEDERAL REGION	FEDERAL AID PROJECT	SHEET
5-96 11-99	LAREDO	6	NH-2002 (79)	702

COUNTY	CONTROL	SECTION	JOB	HIGHWAY
WEBB	0018	05	062 ETC	IH 35

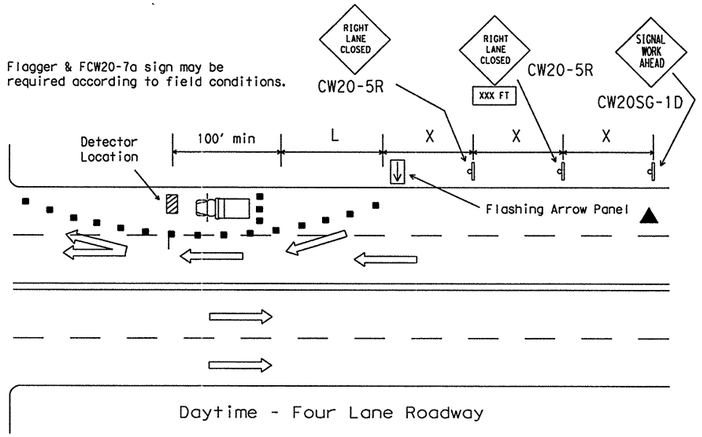

Posted Speed	Formula	Minimum Desirable Taper Lengths ✱✱ 10' Offset	11' Offset	12' Offset	Suggested Maximum Spacing of Device On a Taper	On a Tangent	Minimum Sign Spacing X Distance
30	$L = \frac{WS^2}{60}$	150'	165'	180'	30'	60'-75'	120'
35		205'	225'	245'	35'	70'-90'	160'
40		265'	295'	320'	40'	80'-100'	240'
45	L=WS	450'	495'	540'	45'	90'-110'	320'
50		500'	550'	600'	50'	100'-125'	400'
55		550'	605'	660'	55'	110'-140'	500'
60		600'	660'	720'	60'	120'-150'	600'
65		650'	715'	780'	65'	130'-165'	700'
70		700'	770'	840'	70'	140'-175'	800'
75		750'	825'	900'	75'	150'-185'	900'

✱✱ Taper lengths have been rounded off.
L=Length of Taper (FT.) W=Width of Offset (FT.) S=Posted Speed (MPH)

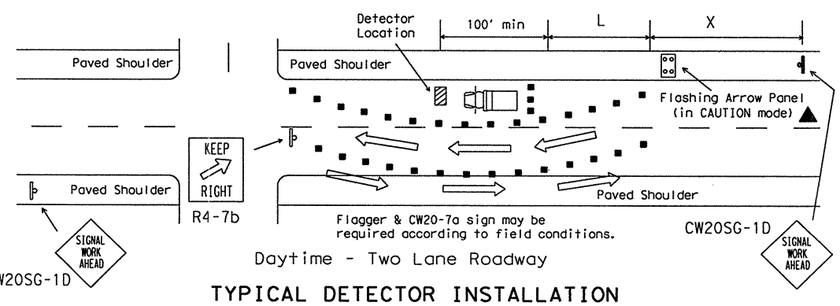

TYPICAL DETECTOR INSTALLATION

OR OTHER WORK OPERATIONS THAT ARE SHORT TERM OR SHORT DURATION

Nighttime Channelizing Devices shall be reflectorized.

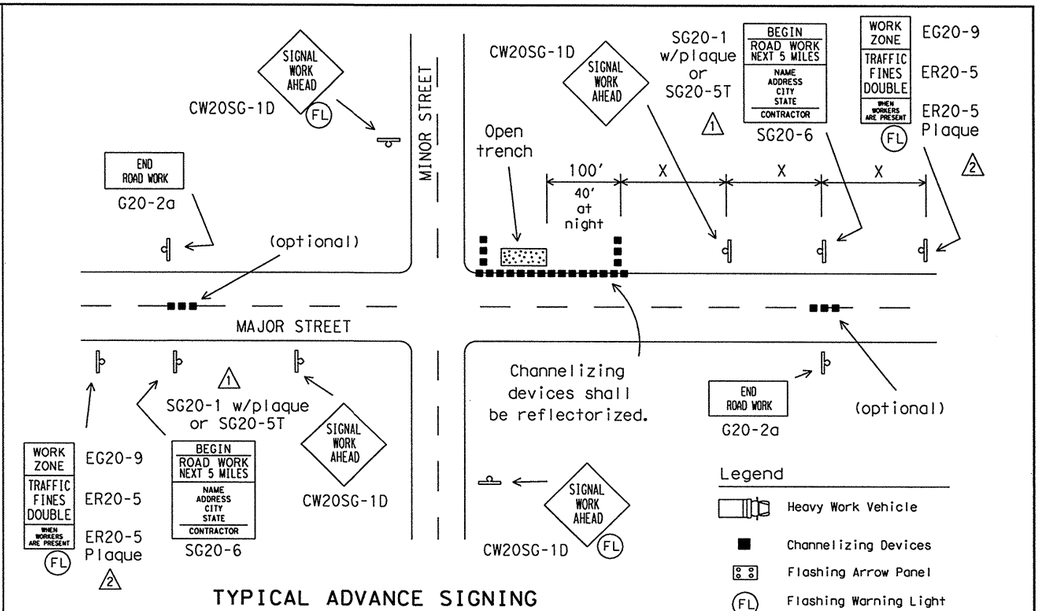

TYPICAL ADVANCE SIGNING

FOR LONG TERM and INTERMEDIATE-TERM STATIONARY WORK OPERATIONS

Observe Warning Signs State Law (R20-3) shall be required.
See BC(2).
Location will be as directed by the Engineer.

▲ The arrow panel may be omitted when stated elsewhere in the plans.

1. Typical channelizing device is the 28" cone.
2. Plastic drums or vertical panels may be used if approved by the Engineer.
3. For several closely adjoining projects, advance signing may not be required in advance of each intersection, but only in advance of the intersections at the project limits.
4. See details elsewhere in the plans for advance signing requirements.
5. Advance signs shall be in place when signal construction operations are in progress.
6. The contractor shall remove advance signs when no construction operations are underway.
7. Obstructions or hazards at the work area shall be clearly marked and delineated at all times.
8. All holes, trenches or other hazardous areas shall be adequately protected by lights or other protective devices.
9. Trenches shall be covered or surrounded with orange plastic construction fence as directed by the Engineer.
10. Flagger and FCW20-7a sign may be required according to field conditions.
11. Vehicles parked in roadway shall be equipped with two strobes.
12. High level flags at corners of vehicle may also be used.
13. Work operations that require work vehicle in traveled way 20 minutes or less may use cones, high level flags and strobes as advance warning devices.
14. Cones should only be placed around vehicle.
15. Flaggers may be used on high speed rural intersections.

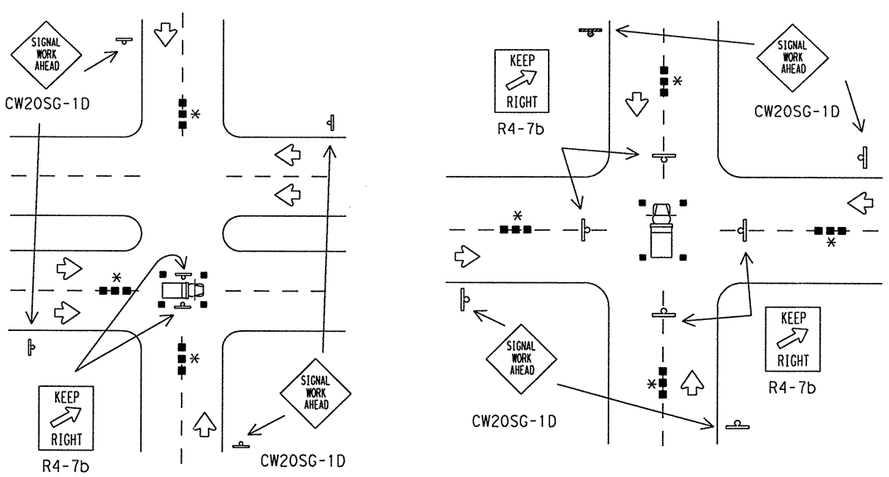

TYPICAL HANGING SIGNAL INSTALLATIONS

OR OTHER WORK OPERATIONS THAT ARE SHORT TERM OR SHORT DURATION

✱ Advance warning channelizing devices are optional.

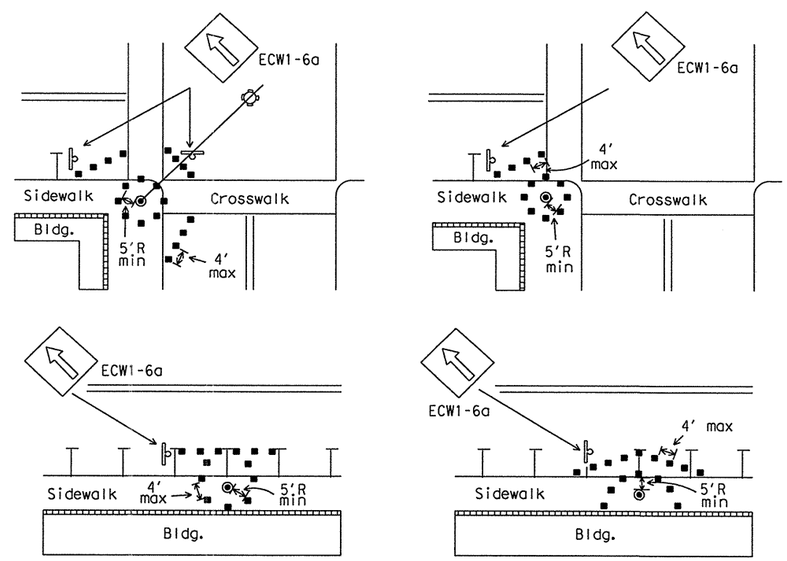

Channelizing devices should not be placed closer than 5 foot radius (minimum) to signal poles.
Parking may be eliminated by placing channelizing devices in spaces.
If pedestrian walkways are blocked, refer to the Texas Manual on Uniform Traffic Control Devices (TMUTCD) Part 6.

TYPICAL RESTRICTED PEDESTRIAN MOVEMENTS

FOR ALL WORK OPERATIONS REGARDLESS OF WORK DURATION

STANDARD PLANS
Texas Department of Transportation
Traffic Operations Division

TRAFFIC SIGNAL INSTALLATION TYPICAL DETAILS

SHEET 1 OF 2 WZ(BTS-1)-03

©TxDOT April 1992 DN: GRB CK: GRB DW: FDN CK: CAL

REVISIONS	STATE DISTRICT	FEDERAL REGION	FEDERAL AID PROJECT	SHEET
2-98 4-98 10-99 3-03	LAREDO	6	NH-2002 (79)	703

COUNTY	CONTROL	SECTION	JOB	HIGHWAY
WEBB	0018	05	062 ETC	IH 35

"ABOVE LANE" WORK PERFORMED BY BUCKET TRUCK

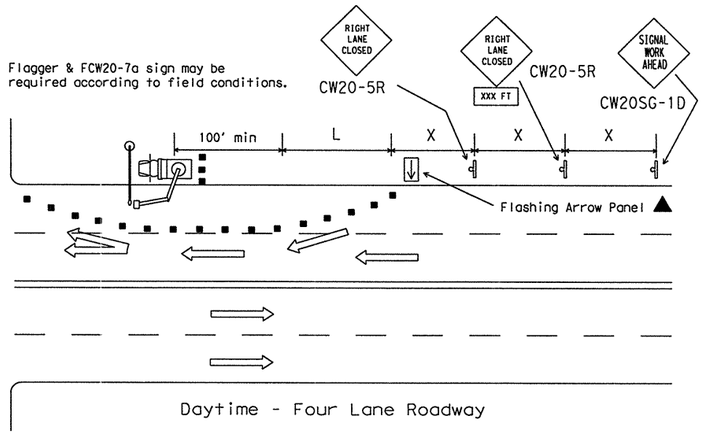

Daytime - Four Lane Roadway

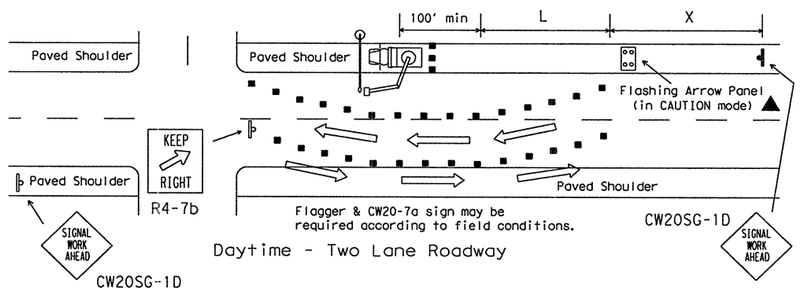

Daytime - Two Lane Roadway

"ABOVE TRUCK" WORK PERFORMED BY BUCKET TRUCK

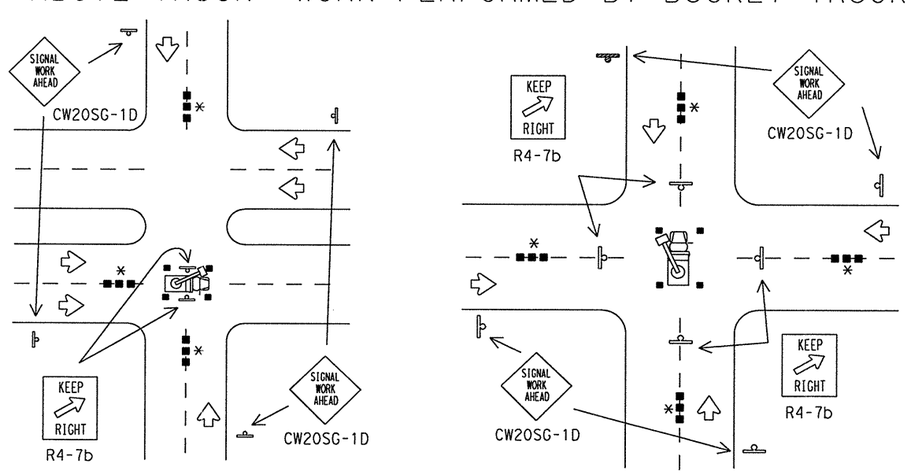

GENERAL NOTES FOR WORK ZONE SIGNS

1. Contractor shall install and maintain signs in a straight and plumb condition and/or as directed by the Engineer.
2. Wooden sign posts shall be painted white.
3. Barricades shall NOT be used as sign supports.
4. Nails shall NOT be used to attach signs to any support.
5. All signs shall be installed in accordance with the plans or as directed by the Engineer. Signs shall be used to regulate, warn, and guide the traveling public safely through the work zone.
6. The Contractor may furnish either the sign design shown in the plans or in the "Standard Highway Sign Designs for Texas" (SHSD). The Engineer/Inspector may require the Contractor to furnish other work zone signs that are shown in the "Texas Manual on Uniform Traffic Control Devices" (TMUTCD) but may have been omitted from the plans. Any variation in the plans shall be documented by written agreement between the Engineer and the Contractor's Responsible Person. All changes must be documented in writing before being implemented. This can include documenting the changes in the Inspector's TxDOT diary and having both the Inspector and Contractor initial and date the agreed upon changes. The additional signs requested by the Engineer/Inspector shall not be subsidiary.
7. The Contractor shall furnish sign supports listed in the "Compliant Work Zone Traffic Control Device List" (CWZTCD). The Contractor shall install the sign support in accordance with the manufacturer's recommendations. If there is a question regarding installation procedures, the Contractor shall furnish the Engineer a copy of the manufacturer's installation recommendations so that the Engineer can verify the correct procedures are being followed.
8. The contractor is responsible for sign installations and replacing signs with damaged or cracked substrates and/or damaged or marred reflective sheeting as directed by the Engineer/Inspector.
9. Identification markings may be shown only on the back of the sign substrate. The maximum height of letters and/or company logos used for identification shall be 1".
10. The Contractor shall replace damaged wood posts. New or damaged wood sign posts shall not be spliced.

Duration of Work (as defined by the TMUTCD Part 6)

The types of sign supports, the size of signs, and the type of sign substrates can vary based on the type of work being performed. The Engineer is responsible for selecting the appropriate size sign for the type of work being performed. The Contractor is responsible for ensuring that the sign support and substrate meets crashworthiness and length of work requirements.

a. Long-term stationary is work that occupies a location more than 3 days.
b. Intermediate-term stationary is work that occupies a location more than one daylight period up to 3 days, or nighttime work lasting more than 1 hour.
c. Short-term stationary is daytime work that occupies a location for more than 1 hour, but less than 12 hours.
d. Short duration is work that occupies a location up to 1 hour.
e. Mobile is work that moves intermittently or continuously.

SIGN MOUNTING HEIGHT

1. The bottom of Long-term/Intermediate-term signs shall be at least 7 feet, but not more than 9 feet, above the paved surface.
2. The bottom of Short-term/Short Duration signs shall be a minimum of 1 foot above the pavement surface but no more than 2 feet above the ground.
3. Long-term/Intermediate-term Signs may be used in lieu of Short-term/Short Duration signing.
4. Short-term/Short Duration signs shall be used only during daylight and shall be removed at the end of the workday.
5. Regulatory signs shall be mounted at least 7 feet, but not more than 9 feet, above the paved surface regardless of work duration.

REMOVING OR COVERING

1. When sign messages may be confusing or do not apply, the signs shall be removed or completely covered.
2. Long-term stationary or intermediate stationary signs installed on square metal tubing may be turned away from traffic 90 degrees when the sign message is not applicable. This type of sign support meets the crashworthiness standards regardless of the direction of impact. This technique may not be used for signs installed in the median of divided highways or near any intersections where the sign may be seen from approaching traffic.
3. Signs installed on skids shall not be turned at 90 degree angles to the roadway. These signs should be removed or completely covered when not required.
4. When signs are covered, the material used shall be opaque, such as heavy mil black plastic.
5. Burlap shall NOT be used to cover signs.
6. Duct tape or other adhesive material shall NOT be affixed to a sign face. These materials can damage the retroreflectivity of sign sheeting.
7. Signs shall be rem

DEPARTMENTAL MATERIAL SPECIFICATIONS

PLYWOOD SIGN BLANKS	DMS-7100
ALUMINUM SIGN BLANKS	DMS-7110
FLAT SURFACE REFLECTIVE SHEETING	DMS-8300
FLEXIBLE ROLL-UP REFLECTIVE SIGNS	DMS-8310
VINYL NON-REFLECTIVE SHEETING	DMS-8320

COLOR	USAGE	SHEETING MATERIAL
ORANGE	BACKGROUND	TYPE E (FLUORESCENT PRISMATIC)
WHITE	BACKGROUND	TYPE C (HIGH SPECIFIC INTENSITY)
WHITE	LEGEND & BORDERS	TYPE C (HIGH SPECIFIC INTENSITY)
BLACK	LEGEND & BORDERS	VINYL NON-REFLECTIVE SHEETING

Only pre-qualified products shall be used. A copy of the "Compliant Work Zone Traffic Control Devices List" (CWZTCD) describes pre-qualified products and their sources and may be obtained by contacting:

Standards Engineer
Traffic Operations Division - TE
Texas Department of Transportation
125 East 11th Street
Austin, Texas 78701-2483
Phone (512) 416-3120
Fax (512) 416-3299

Instructions to locate the "CWZTCD" on TxDOT website are:

Start at website - www.dot.state.tx.us
Click on "About TxDOT",
Click on "Organizational Chart",
Click on Traffic Operations Box,
Click on "Compliant Work Zone Traffic Control Devices",
Click on "View PDF".
This site is printable.

STANDARD PLANS
TEXAS DEPARTMENT OF TRANSPORTATION
Traffic Operations Division

TRAFFIC SIGNAL INSTALLATION BARRICADES AND SIGNS

SHEET 2 OF 2 — WZ(BTS-2)-03

© TxDOT April 1992 | DN: GRB | CK: GRB | DN: FDN | CK: CAL

REVISIONS	STATE DISTRICT	FEDERAL REGION	FEDERAL AID PROJECT	SHEET
2-98				
4-98		6		704
10-99	COUNTY		CONTROL / SECTION / JOB	HIGHWAY

FOUNDATION DESIGN TABLE

FDN TYPE	DRILLED SHAFT DIA	REINFORCING STEEL: VERT BARS	REINFORCING STEEL: SPIRAL & PITCH	DRILLED SHAFT LENGTH-FT ④, ⑤, ⑥: TEXAS CONE PENETROMETER N BLOWS/FT: 10	15	40	ANCHOR BOLT DESIGN ①: ANCHOR BOLT DIA	FY (KSI)	BOLT CIR DIA	ANCHOR TYPE	FOUNDATION DESIGN LOAD ②: MOMENT K-FT	SHEAR KIPS	TYPICAL APPLICATION
24-A	24"	[illegible]	#2 AT 12"	5.7	5.3	4.5	3/4"	36	12 3/4"	1	10	1	PEDESTAL POLE. PEDESTAL MOUNTED CONTROLLER.
30-A	30"	8- #9	[illegible] 6"	11.3	10.3	8.0	1 1/2"	55	17"	2	87	3	MAST ARM ASSEMBLY. (SEE SELECTION TABLE)
36-A	36"	10- #9	#3 A[illegible]	[illegible]3.2	12.0	9.4	1 3/4"	55	19"	2	131	5	MAST ARM ASSEMBLY. (SEE SELECTION TABLE) 30' STRAIN POLE WITH OR WITHOUT LUMINAIRE.
36-B	36"	12- #9	#3 AT 6"	[illegible]	13.6	10.4	2"	55	21"	2	190	7	MAST ARM ASSEMBLY. (SEE SELECTION TABLE) STRAIN POLE TALLER THAN 30' & STRAIN POLE WITH MAST ARM
42-A	42"	14- #9	#3 AT 6"	17.4	[illegible]	11.9	2 1/4"	55	23"	2	271	9	MAST ARM ASSEMBLY. (SEE SELECTION TABLE)
48-A	48"	20- #9	#4 AT 6"	21.9	19[illegible]	[illegible]4.7	2 1/2"	55	27"	2	490	10	MAST ARM ASSEMBLY.

NOTES:

① ANCHOR BOLT DESIGN DEVELOPS THE FOUNDATION CAPACITY GIVEN UNDER FOUNDATION DESIGN LOADS.

② FOUNDATION DESIGN LOADS ARE THE ALLOWABLE MOMENTS AND SHEARS AT THE BASE OF THE STRUCTURE.

③ FOUNDATIONS MAY BE LISTED SEPERATELY OR GROUPED ACCORDING TO SIMILARITY OF LOCATION AND TYPE. QUANTITIES ARE FOR THE CONTRACTOR'S INFORMATION ONLY.

④ FIELD PENETROMETER READINGS AT A DEPTH OF APPROXIMATELY 3 TO 5 FEET MAY BE USED TO ADJUST SHAFT LENGTHS.

⑤ IF ROCK IS ENCOUNTERED, THE DRILLED SHAFT SHALL EXTEND A MINIMUM OF TWO DIAMETERS INTO SOLID ROCK.

⑥ DECIMAL LENGTHS IN DESIGN TABLE ARE TO ALLOW INTERPOLATION FOR OTHER PENETROMETER VALUES. ROUND TO NEAREST FOOT FOR ENTRY INTO SUMMARY TABLE.

COLUMN & FOUNDATION SUMMARY TABLE ③

LOCATION IDENTIFICATION	AVG N BLOW /FT	FDN TYPE	NO EA	DRILLED SHAFT ⑥ LENGTH (FT): 24-A	30-A	36-A	36-B	42-A	48-A	COLUMN HEIGHT (FT) *
POLE #1 *	30	42-A	1					14	34	
POLE #2	30	36-A	1			35				
POLE #3 *	30	42-A	1					14	29	
POLE #4	30	36-A	1			11	27			
POLE #5	30	24-A	1	27						
TOTAL DRILLED SHAFT & COLUMN LENGTH				32		74		91		

* POLE #1 & #3 ARE TO USE TRAFFIC SIGNAL POLE SUPPORT WITH ARCHITECTURAL TREATMENT. SEE "TRAFFIC SIGNAL POLE SUPPORT ARCHITECTURAL TREATMENT" DETAILS.

FOUNDATION SELECTION TABLE FOR STANDARD MAST ARM PLUS ILSN SUPPORT ASSEMBLIES (FT)

		FDN 30-A	FDN 36-A	FDN 36-B	FDN 42-A	FDN 48-A
80 MPH DESIGN WIND SPEED	MAX SINGLE ARM LENGTH	32'	48'			65'
	MAXIMUM DOUBLE ARM LENGTH COMBINATIONS	24' X 24'				
		28' X 28'				
		32' X 28'	32' X 32'			
			36' X 36'			
			40' X 36'			
			44' X 28'	44' X 36'		
100 MPH DESIGN WIND SPEED	MAX SINGLE ARM LENGTH		36'	44'		65'
	MAXIMUM DOUBLE ARM LENGTH COMBINATIONS		24' X 24'			
			28' X 28'			
			32' X 24'	32' X 32'		
				36' X 36'		
				40' X 24'	40' X 36'	
					44' X 36'	

ANCHOR BOLT & TEMPLATE SIZES

BOLT DIA IN	⑦ BOLT LENGTH	TOP THREAD	BOTT THREAD	BOLT CIRCLE	R_2	R_1
3/4"	1'-6"	3"	—	12 3/4"	[illegible]/8"	5 5/8"
1 1/2"	3'-4"	6"	2"	17[illegible]	10"	7"
1 3/4"	3'-10"	7"	2 1/4"	[illegible]	11 1/4"	7 3/4"
2"	4'-3"	8"	2 1/2"	21"	12 1/2"	8 1/2"
2 1/4"	4'-9"	9"	[illegible]	23"	13 3/4"	9 1/4"
2 1/2"	5'-3"	10"	[illegible]3"	27"	16"	11"

⑦ MIN DIM[illegible]IONS GIVEN. LONGE[illegible]OLTS ARE ACCEPTABLE.

GENERAL NOTES:

DESIGN CONFORMS TO 1994 AASHTO STANDARD SPECIFICATIONS FOR STRUCTURAL SUPPORTS FOR HIGHWAY SIGNS, LUMINAIRES AND TRAFFIC SIGNALS AND INTERIM REVISIONS THERETO.

REINFORCING STEEL SHALL CONFORM TO ITEM 440.

CONCRETE SHALL BE CLASS A OR C.

THREADS FOR ANCHOR BOLTS AND NUTS SHALL BE ROLLED OR CUT THREADS OF UNIFIED NATIONAL COARSE THREAD SERIES EXCEPT FOR A193B7 BOLTS WHICH SHALL HAVE 8 PITCH THREAD SERIES. BOLTS AND NUTS SHALL HAVE CLASS 2A AND 2B FIT TOLERANCES. GALVANIZED NUTS SHALL BE TAPPED AFTER GALVANIZING.

ANCHOR BOLTS THAT ARE 1" IN DIAMETER OR LESS SHALL CONFORM TO ASTM A36. ANCHOR BOLTS LARGER THAN 1" IN DIAMETER SHALL CONFORM TO A36M55 IN ACCORDANCE WITH THE ITEM. "ANCHOR BOLTS" OR ASTM A193B7 OR A687. GALVANIZE OR COAT WITH ZINC-RICH PAINT A MINIMUM OF THE UPPER 14 INCHES OF ALL ANCHOR BOLTS UNLESS OTHERWISE NOTED. EXPOSED NUTS SHALL BE GALVANIZED OR COATED WITH ZINC-RICH PAINT. WASHERS SHALL BE GALVANIZED. TEMPLATES AND EMBEDED NUTS NEED NOT BE GALVANIZED.

EXAMPLE:

1. FOR 80MPH DESIGN WIND SPEED, FOUNDATION 30-A CAN SUPPORT UP TO A 32' ARM WITH ANOTHER ARM UP TO 28'
2. FOR 100MPH DESIGN WIND SPEED, FOUNDATION 36-A CAN SUPPORT A SINGLE 36' MAST ARM.

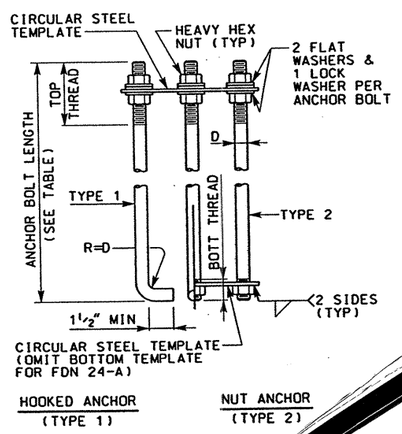

ANCHOR BOLT ASSEMB[illegible]

INSTALLATION PROCEDURE[illegible]

THREADS OF ANCHOR BO[illegible] SHALL BE COATED WITH PIPE [illegible] COMPOUND PRIOR TO INSTA[illegible]ON OF UPPER NUTS WHEN E[illegible]G POLE. AFTER POLE IS P[illegible]ED AND IN PERMANENT ALIGNME[illegible] THE EXPOSED THREADS OF PAINT[illegible]OLTS SHALL BE CLEANED AND AN[illegible]TIONAL COATING OF ZINC-RICH [illegible] APPLIED TO SEAL THE BOLT [illegible]READ-NUT JOINT.

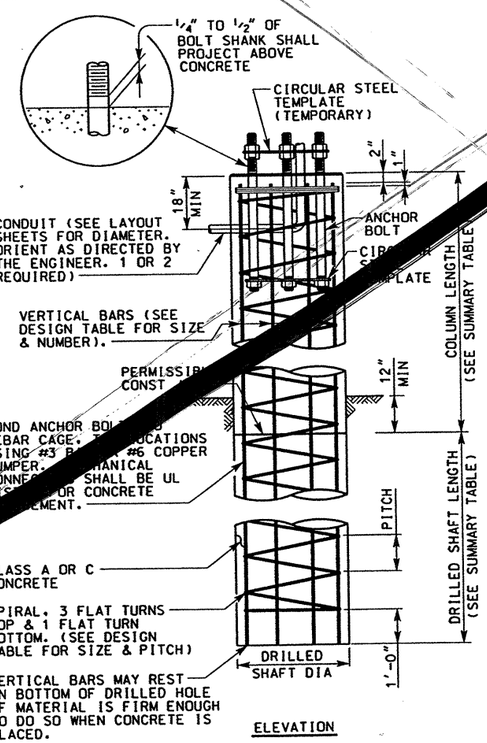

FOUNDATION DETAILS

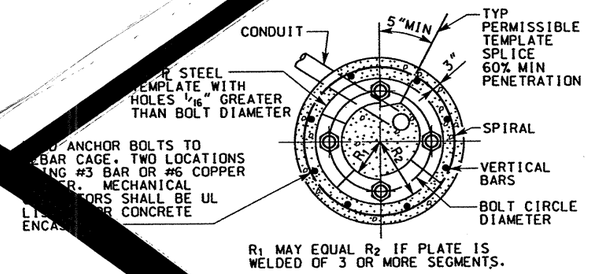

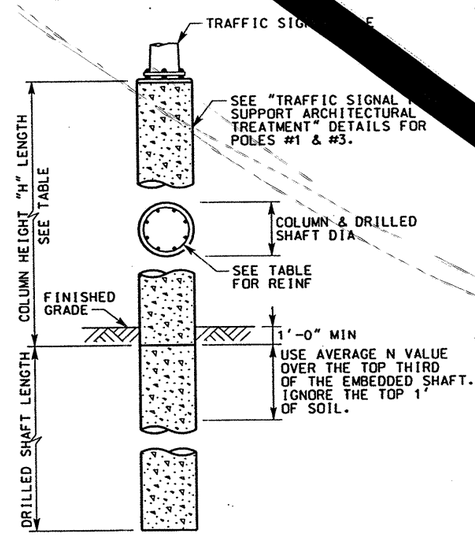

ELEVATION
(FOUNDATION OUTSIDE RETAINING WALL OR STRUCTURE)

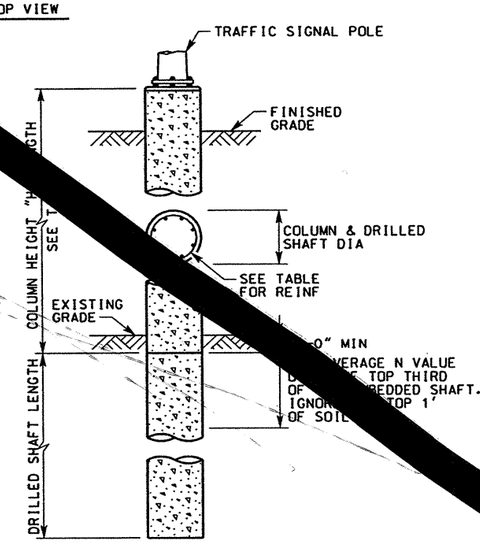

ELEVATION
(FOUNDATION BEHIND RETAINING WALL)

HS25 LOADING

STATE OF TEXAS — JAMES B. HORNSBY — 81485 — REGISTERED PROFESSIONAL ENGINEER

THE SEAL APPEARING ON THIS DOCUMENT WAS AUTHORIZED BY JAMES B. HORNSBY PE 81485, ON APRIL 18, 2003

KBR
Engineered by KBR Technical Services, Inc

©2003 Texas Department of Transportation

IH 35
LOOP 20 TO UNIROYAL ROAD
TRES EQUIS BLVD
TRAFFIC SIGNAL POLE
COLUMN & FOUNDATION
TS-FD-99 (MOD)
SHEET 1 OF 1

STATE	FEDERAL AID PROJECT NO	SHEET NO
	[illegible]NH-2002 (79)	705
STATE	STATE DIST	COUNTY
TEXAS	[illegible]EDO	WEBB
CONT	SECT JOB	HIGHWAY NO
0018	05 062, ETC	IH 35

FOUNDATION DESIGN TABLE

FDN TYPE	DRILLED SHAFT DIA	REINFORCING STEEL: VERT BARS	REINFORCING STEEL: ** SPIRAL & PITCH	DRILLED SHAFT LENGTH-FT ④, ⑤, ⑥ TEXAS CONE PENETROMETER N BLOWS/FT: 10	15	40	ANCHOR BOLT DESIGN ①: ANCHOR BOLT DIA	FY (KSI)	BOLT CIR DIA	ANCHOR TYPE	FOUNDATION DESIGN LOAD ②: MOMENT K-FT	SHEAR KIPS	TYPICAL APPLICATION
24-A	24"	4- #5	#2 AT 12"	5.7	5.3	4.5	3/4"	36	12 3/4"	1	10	1	PEDESTAL POLE. PEDESTAL MOUNTED CONTROLLER.
30-A	30"	8- #9	#3 AT 6"	11.3	10.3	8.0	1 1/2"	55	17"	2	87	3	MAST ARM ASSEMBLY. (SEE SELECTION TABLE)
36-A	36"	10- #9	#3 AT 6"	13.2	12.0	9.4	1 3/4"	55	19"	2	131	5	MAST ARM ASSEMBLY. (SEE SELECTION TABLE) 30' STRAIN POLE WITH OR WITHOUT LUMINAIRE.
36-B	36"	12- #9	#3 AT 6"	15.2	13.6	10.4	2"	55	21"	2	190	7	MAST ARM ASSEMBLY. (SEE SELECTION TABLE) STRAIN POLE TALLER THAN 30' & STRAIN POLE WITH MAST ARM
42-A	42"	14- #9	#3 AT 6"	17.4	15.6	11.9	2 1/4"	55	23"	2	271	9	MAST ARM ASSEMBLY. (SEE SELECTION TABLE)
48-A	48"	20- #9	#4 AT 6"	21.9	19.5	14.7	2 1/2"	55	27"	2	490	10	MAST ARM ASSEMBLY.

NOTES:

① ANCHOR BOLT DESIGN DEVELOPS THE FOUNDATION CAPACITY GIVEN UNDER FOUNDATION DESIGN LOADS.

② FOUNDATION DESIGN LOADS ARE THE ALLOWABLE MOMENTS AND SHEARS AT THE BASE OF THE STRUCTURE.

③ FOUNDATIONS ~~MAY BE~~ LISTED SEPERATELY OR GROUPED ACCORDING TO SIMILARITY OF LOCATION AND TYPE. QUANTITIES ARE FOR THE CONTRACTOR'S INFORMATION ONLY.

④ FIELD PENETROMETER READINGS AT A DEPTH OF APPROXIMATELY 3 TO 5 FEET ~~MAY BE~~ USED TO ADJUST SHAFT LENGTHS.

⑤ IF ROCK IS ENCOUNTERED, THE DRILLED SHAFT ~~SHALL~~ EXTEND A MINIMUM OF TWO DIAMETERS INTO SOLID ROCK.

⑥ DECIMAL LENGTHS IN DESIGN TABLE ARE TO ALLOW INTERPOLATION FOR OTHER PENETROMETER VALUES. ROUND TO NEAREST FOOT FOR ENTRY INTO SUMMARY TABLE.

COLUMN & FOUNDATION SUMMARY TABLE ③

LOCATION IDENTIFICATION	AVG N BLOW /FT	FDN TYPE	NO EA	DRILLED SHAFT ⑥ LENGTH (FT): 24-A	30-A	36-A	36-B	42-A	COLUMN HEIGHT (FT) *: 48-A
POLE #1 *	30	42-A	1						20 34
POLE #2	30	36-A	1						15 35
POLE #3 *	30	42-A	1						20 29
POLE #4	30	36-A	1					23 17	
POLE #5	30	24-A	1		8 27				
TOTAL DRILLED SHAFT & COLUMN LENGTHS					35			40	153

* POLE #1 & #3 ARE TO USE TRAFFIC SIGNAL POLE SUPPORT WITH ARCHITECTURAL TREATMENT. SEE "TRAFFIC SIGNAL POLE SUPPORT ARCHITECTURAL TREATMENT" DETAILS.

GENERAL NOTES:

DESIGN CONFORMS TO 1994 AASHTO STANDARD SPECIFICATIONS FOR STRUCTURAL SUPPORTS FOR HIGHWAY SIGNS, LUMINAIRES AND TRAFFIC SIGNALS AND INTERIM REVISIONS THERETO.
REINFORCING STEEL ~~SHALL~~ CONFORM TO ITEM 440.
CONCRETE ~~SHALL BE~~ CLASS A OR C.
THREADS FOR ANCHOR BOLTS AND NUTS ~~SHALL BE~~ ROLLED OR CUT THREADS OF UNIFIED NATIONAL COARSE THREAD SERIES EXCEPT FOR A193B7 BOLTS WHICH ~~SHALL~~ HAVE 8 PITCH THREAD SERIES. BOLTS AND NUTS ~~SHALL~~ HAVE CLASS 2A AND 2B FIT TOLERANCES. GALVANIZED NUTS ~~SHALL BE~~ TAPPED AFTER GALVANIZING.
ANCHOR BOLTS THAT ARE 1" IN DIAMETER OR LESS ~~SHALL~~ CONFORM TO ASTM A36. ANCHOR BOLTS LARGER THAN 1" IN DIAMETER ~~SHALL~~ CONFORM TO A36M55 IN ACCORDANCE WITH THE ITEM. "ANCHOR BOLTS" OR ASTM A193B7 OR A687. GALVANIZE OR COAT WITH ZINC-RICH PAINT A MINIMUM OF THE UPPER 14 INCHES OF ALL ANCHOR BOLTS UNLESS OTHERWISE NOTED. EXPOSED NUTS ~~SHALL BE~~ GALVANIZED OR COATED WITH ZINC-RICH PAINT. WASHERS ~~SHALL BE~~ GALVANIZED. TEMPLATES AND EMBEDED NUTS NEED NOT BE GALVANIZED.

FOUNDATION SELECTION TABLE FOR STANDARD MAST ARM PLUS ILSN SUPPORT ASSEMBLIES (FT)

		FDN 30-A	FDN 36-A	FDN 36-B	FDN 42-A	FDN 48-A
80 MPH DESIGN WIND SPEED	MAX SINGLE ARM LENGTH	32'	48'			65'
	MAXIMUM DOUBLE ARM LENGTH COMBINATIONS	24' X 24'				
		28' X 28'				
		32' X 28'	32' X 32'			
			36' X 36'			
			40' X 36'			
			44' X 28'	44' X 36'		
100 MPH DESIGN WIND SPEED	MAX SINGLE ARM LENGTH		36'	44'		65'
	MAXIMUM DOUBLE ARM LENGTH COMBINATIONS		24' X 24'			
			28' X 28'			
			32' X 24'	32' X 32'		
				36' X 36'		
				40' X 24'	40' X 36'	
					44' X 36'	

EXAMPLE:

1. FOR 80MPH DESIGN WIND SPEED, FOUNDATION 30-A CAN SUPPORT UP TO A 32' ARM WITH ANOTHER ARM UP TO 28'
2. FOR 100MPH DESIGN WIND SPEED, FOUNDATION 36-A CAN SUPPORT A SINGLE 36' MAST ARM.

ANCHOR BOLT & TEMPLATE SIZES

BOLT DIA IN	⑦ BOLT LENGTH	TOP THREAD	BOTT THREAD	BOLT CIRCLE	R_2	R_1
3/4"	1'-6"	3"	—	12 3/4"	7 1/8"	5 5/8"
1 1/2"	3'-4"	6"	2"	17"	10"	7"
1 3/4"	3'-10"	7"	2 1/4"	19"	11 1/4"	7 3/4"
2"	4'-3"	8"	2 1/2"	21"	12 1/2"	8 1/2"
2 1/4"	4'-9"	9"	3"	23"	13 3/4"	9 1/4"
2 1/2"	5'-3"	10"	3"	27"	16"	11"

⑦ MIN DIMENSIONS GIVEN. LONGER BOLTS ARE ACCEPTABLE.

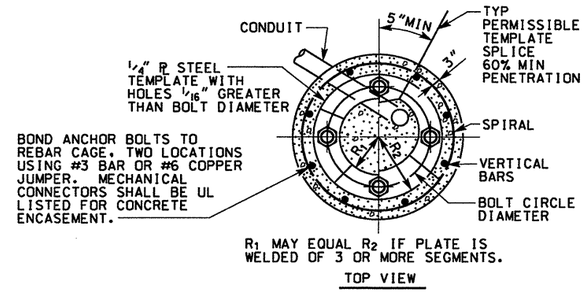

TOP VIEW

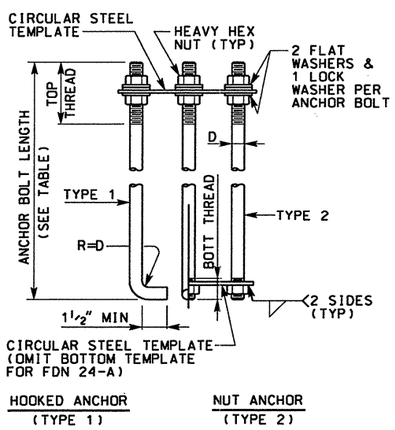

ANCHOR BOLT ASSEMBLY

INSTALLATION PROCEDURE:
THREADS OF ANCHOR BOLTS ~~SHALL BE~~ COATED WITH PIPE JOINT COMPOUND PRIOR TO INSTALLATION OF UPPER NUTS WHEN ERECTING POLE. AFTER POLE IS PLUMBED AND IN PERMANENT ALIGNMENT. THE EXPOSED THREADS OF PAINTED BOLTS ~~SHALL BE~~ CLEANED AND AN ADDITIONAL COATING OF ZINC-RICH PAINT APPLIED TO SEAL THE BOLT THREAD-NUT JOINT.

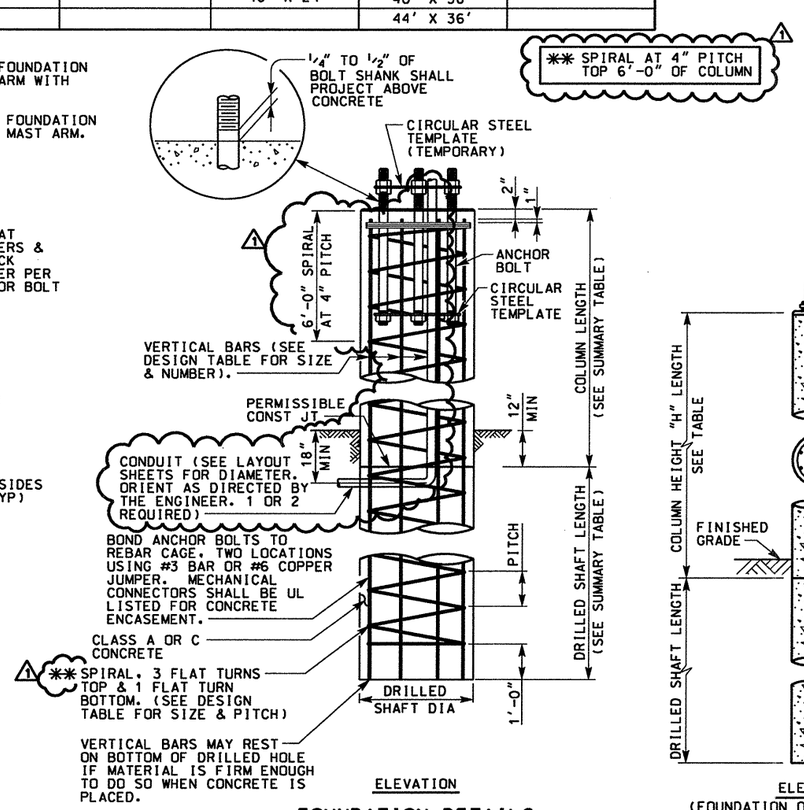

ELEVATION

FOUNDATION DETAILS

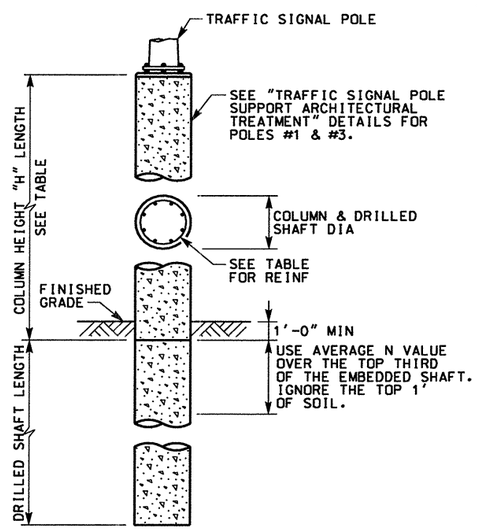

ELEVATION
(FOUNDATION OUTSIDE RETAINING WALL OR STRUCTURE)

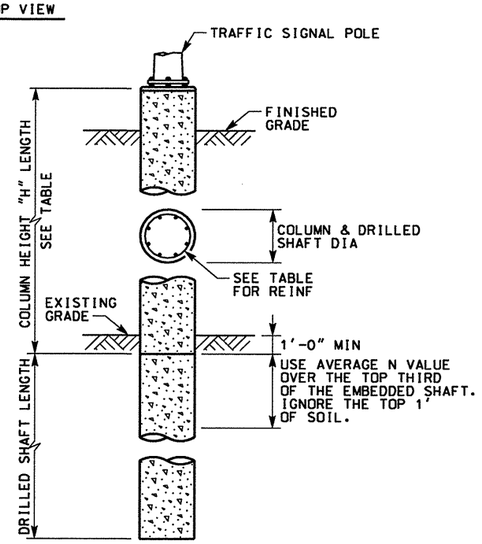

ELEVATION
(FOUNDATION BEHIND RETAINING WALL)

HS25 LOADING

DATE	BY	REV	REVISION
7/12/05	SRT	01	REV FDN TYPE & DRILLED SHAFT LENGTHS

STATE OF TEXAS — STEPHANIE R. TREVINO — 92038 — LICENSED PROFESSIONAL ENGINEER

THE SEAL APPEARING ON THIS DOCUMENT WAS AUTHORIZED BY STEPHANIE R. TREVINO PE 92038, ON JULY 12, 2005

KBR
Engineered by KBR Technical Services, Inc

©2004 Texas Department of Transportation

IH 35
LOOP 20 TO UNIROYAL ROAD
TRES EQUIS BLVD
TRAFFIC SIGNAL POLE
COLUMN & FOUNDATION
TS-FD-99 (MOD)
SHEET 1 OF 1

FED RD DIV NO	FEDERAL AID PROJECT NO	SHEET NO
6	NH-2002 (79)	705
STATE	STATE DIST	COUNTY
TEXAS	LAREDO	WEBB
CONT	SECT / JOB	HIGHWAY NO
0018	05 / 062, ETC	IH 35

REF FILE(S): JOILOP01.BDR, BDR LV ON = 48.57.58.60-62

HOUFILE023 \hcivil\cf0130\ b22sdp01.dgn-04 7/12/2005

FOUNDATION DESIGN TABLE

FDN TYPE	[illegible]	REINFORCING STEEL: [illegible]	REINFORCING STEEL: SPIRAL & PITCH	DRILLED SHAFT LENGTH-FT ④, ⑤, ⑥: TEXAS CONE PENETROMETER N BLOWS/FT: 10	15	40	ANCHOR BOLT DESIGN ①: ANCHOR BOLT DIA	FY (KSI)	BOLT CIR DIA	ANCHOR TYPE	FOUNDATION DESIGN LOAD ②: MOMENT K-FT	SHEAR KIPS	TYPICAL APPLICATION
24-A	24"	4[illegible]	[illegible] AT 12"	5.7	5.3	4.5	3/4"	36	12 3/4"	1	10	1	PEDESTAL POLE. PEDESTAL MOUNTED CONTROLLER.
30-A	30"	8- #9	#3 [illegible]	11.3	10.3	8.0	1 1/2"	55	17"	2	87	3	MAST ARM ASSEMBLY. (SEE SELECTION TABLE)
36-A	36"	10- #9	#3 AT 6[illegible]	[illegible]	12.0	9.4	1 3/4"	55	19"	2	131	5	MAST ARM ASSEMBLY. (SEE SELECTION TABLE) 30' STRAIN POLE WITH OR WITHOUT LUMINAIRE.
36-B	36"	12- #9	#3 AT 6"	15.[illegible]	[illegible]6	10.4	2"	55	21"	2	190	7	MAST ARM ASSEMBLY. (SEE SELECTION TABLE) STRAIN POLE TALLER THAN 30' & STRAIN POLE WITH MAST ARM
42-A	42"	14- #9	#3 AT 6"	17.4	19[illegible]	[illegible].9	2 1/4"	55	23"	2	271	9	MAST ARM ASSEMBLY. (SEE SELECTION TABLE)
48-A	48"	20- #9	#4 AT 6"	21.9	19.5	[illegible]	2 1/2"	55	27"	2	490	10	MAST ARM ASSEMBLY.

FOUNDATION SELECTION TABLE F[illegible]ANDARD MAST ARM PLUS ILSN SUPPORT ASSEM[illegible] (FT)

		FDN 30-A	FDN 36-A	[illegible]-B	FDN 42-A	FDN 48-A
80 MPH DESIGN WIND SPEED	MAX SINGLE ARM LENGTH	32'	48'			65'
	MAXIMUM DOUBLE ARM LENGTH COMBINATIONS	24' X 24'				
		28' X 28'				
		32' X 28'	32' X 32'			
			36' X 36'			
			40' X 36'			
			44' X 28'	44' X 36'		
100 MPH DESIGN WIND SPEED	MAX SINGLE ARM LENGTH		36'	44'		65'
	MAXIMUM DOUBLE ARM LENGTH COMBINATIONS		24' X 24'			
			28' X 28'			
			32' X 24'	32' X 32'		
				36' X 36'		
				40' X 24'	40' X 36'	
					44' X 36'	

NOTES:

① ANCHOR BOLT DESIGN DEVELOPS THE FOUNDATION CAPACITY GIVEN UNDER FOUNDATION DESIGN LOADS.

② FOUNDATION DESIGN LOADS ARE THE ALLOWABLE MOMENTS AND SHEARS AT THE BASE OF THE STRUCTURE.

③ FOUNDATIONS MAY BE LISTED SEPERATELY OR GROUPED ACCORDING TO SIMILARITY OF LOCATION AND TYPE. QUANTITIES ARE FOR THE CONTRACTOR'S INFORMATION ONLY.

④ FIELD PENETROMETER READINGS AT A DEPTH OF APPROXIMATELY 3 TO 5 FEET MAY BE USED TO ADJUST SHAFT LENGTHS.

⑤ IF ROCK IS ENCOUNTERED. THE DRILLED SHAFT SHALL EXTEND A MINIMUM OF TWO DIAMETERS INTO SOLID ROCK.

⑥ DECIMAL LENGTHS IN DESIGN TABLE TO ALLOW INTERPOLATION FOR OT[illegible] PENETROMETER VALUES. ROUND [illegible] EAREST FOOT FOR ENTRY INTO SUMMA[illegible]BLE.

COLUMN & FOUNDATION SU[illegible] TABLE ③

LOCATION IDENTIFICATION	AVG N BLOW /FT	FDN TYPE	NO [illegible]	DE[illegible] SHAFT ⑥ [illegible]TH (FT): 24-A	30-A	36-A	36-B	COLUMN HEIGHT (FT) ✱: 42-A	48-A
POLE #1 ✱	11	[illegible]A	1					20 20	
POLE #2	[illegible]	36-A	1			14 20			
POLE #3 ✱	[illegible]0	42-A	1					12 28	
POLE #4	40	36-A	1			14 25			
POL[illegible]	40	24-A	1	6 19					
TOTAL [illegible]ED SHAFT & COLUMN LENGTHS				25		73		77	

✱ [illegible] #1 & #3 ARE TO USE TRAFFIC SIGNAL POLE SUPPORT [illegible]TH ARCHITECTURAL TREATMENT. SEE "TRAFFIC SIGNAL [illegible] POLE SUPPORT ARCHITECTURAL TREATMENT" DETAILS.

GENERAL NOTES:

DESIGN CONFORMS TO 1994 AASHTO STANDARD SPECIFICATIONS FOR STRUCTURAL SUPPORTS FOR HIGHWAY SIGNS, LUMINAIRES AND TRAFFIC SIGNALS AND INTERIM REVISIONS THERETO.
REINFORCING STEEL SHALL CONFORM TO ITEM 440.
CONCRETE SHALL BE CLASS A OR C.
THREADS FOR ANCHOR BOLTS AND NUTS SHALL BE ROLLED OR CUT THREADS OF UNIFIED NATIONAL COARSE THREAD SERIES EXCEPT FOR A193B7 BOLTS WHICH SHALL HAVE 8 PITCH THREAD SERIES. BOLTS AND NUTS SHALL HAVE CLASS 2A AND 2B FIT TOLERANCES. GALVANIZED NUTS SHALL BE TAPPED AFTER GALVANIZING.
ANCHOR BOLTS THAT ARE 1" IN DIAMETER OR LESS SHALL CONFORM TO ASTM A36. ANCHOR BOLTS LARGER THAN 1" IN DIAMETER SHALL CONFORM TO A36M55 IN ACCORDANCE WITH THE ITEM. "ANCHOR BOLTS" OR ASTM A193B7 OR A687. GALVANIZE OR COAT WITH ZINC-RICH PAINT A MINIMUM OF THE UPPER 14 INCHES OF ALL ANCHOR BOLTS UNLESS OTHERWISE NOTED. EXPOSED NUTS SHALL BE GALVANIZED OR COATED WITH ZINC-RICH PAINT. WASHERS SHALL BE GALVANIZED. TEMPLATES AND EMBEDED NUTS NEED NOT BE GALVANIZED.

ANCHOR BOLT & [illegible]MPLATE SIZES

BOLT DIA IN	⑦ BOLT LENGTH	TOP THR[illegible]	[illegible]OTT THREAD	BOLT CIRCLE	R_2	R_1
3/4"	1'[illegible]	3"	—	12 3/4"	7 1/8"	5 5/8"
1 1/2"	[illegible]	6"	2"	17"	10"	7"
1 3/[illegible]	[illegible]'-10"	7"	2 1/4"	19"	11 1/4"	7 3/4"
[illegible]	4'-3"	8"	2 1/2"	21"	12 1/2"	8 1/2"
[illegible]/4"	4'-9"	9"	3"	23"	13 3/4"	9 1/4"
2 1/2"	5'-3"	10"	3"	27"	16"	11"

⑦ MIN DIMENSIONS GIVEN. LONGER BOLTS ARE ACCEPTABLE.

EXAMPLE:

1. FOR 80MPH DESIGN WIND SPEED, FOUNDATION 30-A CAN SUPPORT UP TO A 32' ARM WITH ANOTHER ARM UP TO 28'
2. FOR 100MPH DESIGN WIND SPEED, FOUNDATION 36-A CAN SUPPORT A SINGLE 36' MAST ARM.

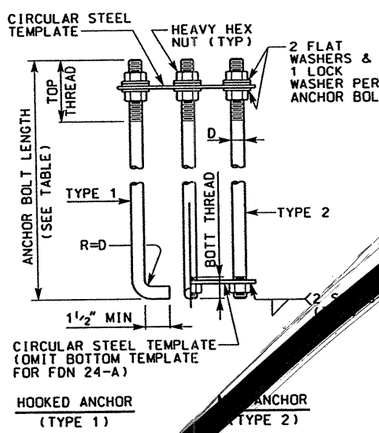

ANCHOR BO[illegible] ASSEMBLY

INSTALLATI[illegible] PROCEDURE:
THREADS [illegible] ANCHOR BOLTS SHALL BE COATED [illegible] PIPE JOINT COMPOUND PRIOR [illegible] INSTALLATION OF UPPER NUT [illegible]EN ERECTING POLE. AFTER B[illegible] IS PLUMBED AND IN PERMANENT [illegible]GNMENT. THE EXPOSED THREADS OF [illegible]AINTED BOLTS SHALL BE CLEANED AND AN ADDITIONAL COATING OF ZINC-RICH PAINT APPLIED TO SEAL THE BOLT THREAD-NUT JOINT.

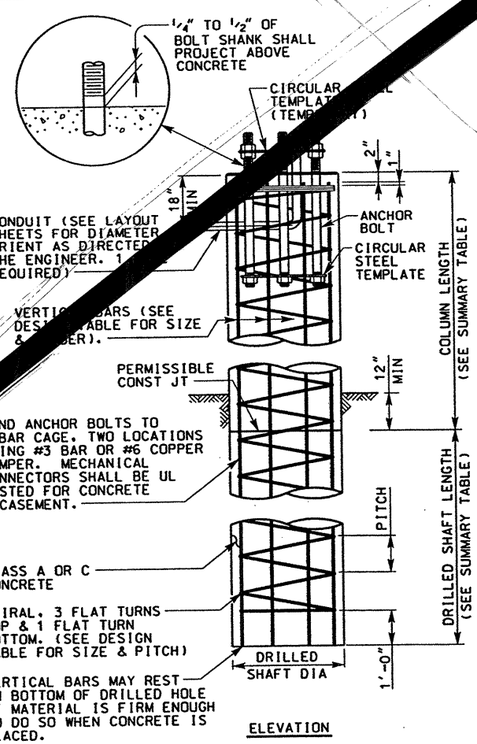

FOUNDATION DETAILS

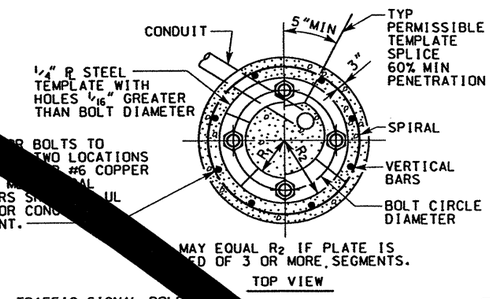

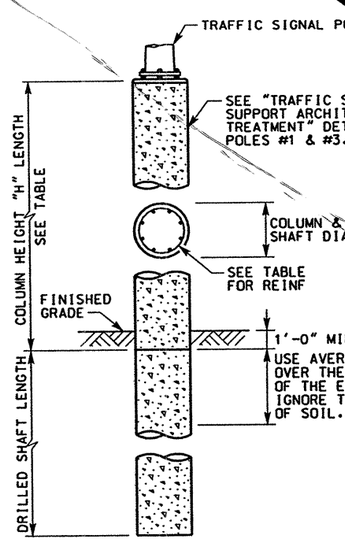

ELEVATION
(FOUNDATION OUTSIDE RETAINING WALL OR STRUCTURE)

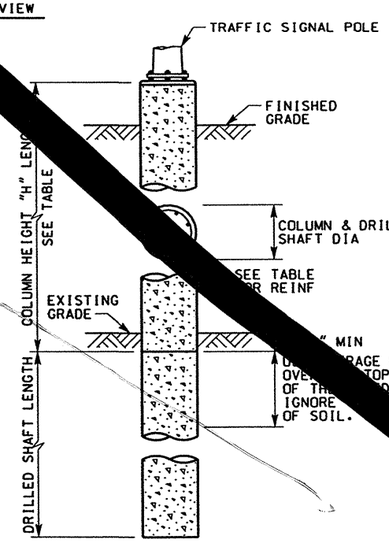

ELEVATION
(FOUNDATION BEHIND RETAINING WALL)

HS25 LOADING

STATE OF TEXAS — JAMES B. HORNSBY — 81485 — REGISTERED PROFESSIONAL ENGINEER

THE SEAL APPEARING ON THIS DOCUMENT WAS AUTHORIZED BY JAMES B. HORNSBY PE 81485, ON APRIL 18, 2003

KBR
Engineered by KBR Technical Services, Inc

©2003 Texas Department of Transportation

IH 35
LOOP 20 TO UNIROYAL ROAD
CARRIER DRIVE
TRAFFIC SIGNAL POLE
COLUMN & FOUNDATION
TS-FD-99 (MOD)
SHEET 1 OF 1

FED RD DIV NO	FEDERAL AID PROJECT NO	SHEET NO
6	[illegible]02 (79)	706
STATE	DISTRICT	COUNTY
TEXAS	LAREDO	WEBB
CONT	SECT / JOB	HIGHWAY NO
0018	05 / 062. ETC	IH 35

REF FILE(S): J01LOP01.BDR. BDR LV ON = 48.57.58.60-62

b22sdp02.dgn-04 HOUFILE023 \hclvltc\c10130\ 4/18/2003

FOUNDATION DESIGN TABLE

FDN TYPE	DRILLED SHAFT DIA	REINFORCING STEEL: VERT BARS	REINFORCING STEEL: ** SPIRAL & PITCH	DRILLED SHAFT LENGTH-FT (4), (5), (6): TEXAS CONE PENETROMETER N BLOWS/FT: 10	15	40	ANCHOR BOLT DESIGN (1): ANCHOR BOLT DIA	FY (KSI)	BOLT CIR DIA	ANCHOR TYPE	FOUNDATION DESIGN LOAD (2): MOMENT K-FT	SHEAR KIPS	TYPICAL APPLICATION
24-A	24"	4- #5	#2 AT 12"	5.7	5.3	4.5	3/4"	36	12 3/4"	1	10	1	PEDESTAL POLE. PEDESTAL MOUNTED CONTROLLER.
30-A	30"	8- #9	#3 AT 6"	11.3	10.3	8.0	1 1/2"	55	17"	2	87	3	MAST ARM ASSEMBLY. (SEE SELECTION TABLE)
36-A	36"	10- #9	#3 AT 6"	13.2	12.0	9.4	1 3/4"	55	19"	2	131	5	MAST ARM ASSEMBLY. (SEE SELECTION TABLE) 30' STRAIN POLE WITH OR WITHOUT LUMINAIRE.
36-B	36"	12- #9	#3 AT 6"	15.2	13.6	10.4	2"	55	21"	2	190	7	MAST ARM ASSEMBLY. (SEE SELECTION TABLE) STRAIN POLE TALLER THAN 30' & STRAIN POLE WITH MAST ARM
42-A	42"	14- #9	#3 AT 6"	17.4	15.6	11.9	2 1/4"	55	23"	2	271	9	MAST ARM ASSEMBLY. (SEE SELECTION TABLE)
48-A	48"	20- #9	#4 AT 6"	21.9	19.5	14.7	2 1/2"	55	27"	2	490	10	MAST ARM ASSEMBLY.

NOTES:

(1) ANCHOR BOLT DESIGN DEVELOPS THE FOUNDATION CAPACITY GIVEN UNDER FOUNDATION DESIGN LOADS.

(2) FOUNDATION DESIGN LOADS ARE THE ALLOWABLE MOMENTS AND SHEARS AT THE BASE OF THE STRUCTURE.

(3) FOUNDATIONS ~~MAY BE~~ LISTED SEPERATELY OR GROUPED ACCORDING TO SIMILARITY OF LOCATION AND TYPE. QUANTITIES ARE FOR THE CONTRACTOR'S INFORMATION ONLY.

(4) FIELD PENETROMETER READINGS AT A DEPTH OF APPROXIMATELY 3 TO 5 FEET ~~MAY BE~~ USED TO ADJUST SHAFT LENGTHS.

(5) IF ROCK IS ENCOUNTERED, THE DRILLED SHAFT SHALL EXTEND A MINIMUM OF TWO DIAMETERS INTO SOLID ROCK.

(6) DECIMAL LENGTHS IN DESIGN TABLE ARE TO ALLOW INTERPOLATION FOR OTHER PENETROMETER VALUES. ROUND TO NEAREST FOOT FOR ENTRY INTO SUMMARY TABLE.

COLUMN & FOUNDATION SUMMARY TABLE (3)

LOCATION IDENTIFICATION	AVG N BLOW /FT	FDN TYPE	NO EA	DRILLED SHAFT (6) LENGTH (FT) / COLUMN HEIGHT (FT) * 24-A	30-A	36-A	36-B	42-A	48-A
POLE #1 *	11	42-A	1					18	20
POLE #2	11	36-A	1					15	20
POLE #3 *	40	42-A	1					20	28
POLE #4	40	36-A	1					13	25
POLE #5	40	24-A	1		10	21			
TOTAL DRILLED SHAFT & COLUMN LENGTHS					31			73	86

* POLE #1 & #3 ARE TO USE TRAFFIC SIGNAL POLE SUPPORT WITH ARCHITECTURAL TREATMENT. SEE "TRAFFIC SIGNAL POLE SUPPORT ARCHITECTURAL TREATMENT" DETAILS. (1)

FOUNDATION SELECTION TABLE FOR STANDARD MAST ARM PLUS ILSN SUPPORT ASSEMBLIES (FT)

		FDN 30-A	FDN 36-A	FDN 36-B	FDN 42-A	FDN 48-A
80 MPH DESIGN WIND SPEED	MAX SINGLE ARM LENGTH	32'	48'			65'
	MAXIMUM DOUBLE ARM LENGTH COMBINATIONS	24' X 24'				
		28' X 28'				
		32' X 28'	32' X 32'			
			36' X 36'			
			40' X 36'			
			44' X 28'	44' X 36'		
100 MPH DESIGN WIND SPEED	MAX SINGLE ARM LENGTH		36'	44'		65'
	MAXIMUM DOUBLE ARM LENGTH COMBINATIONS		24' X 24'			
			28' X 28'			
			32' X 24'	32' X 32'		
				36' X 36'		
				40' X 24'	40' X 36'	
					44' X 36'	

ANCHOR BOLT & TEMPLATE SIZES

BOLT DIA IN	(7) BOLT LENGTH	TOP THREAD	BOTT THREAD	BOLT CIRCLE	R_2	R_1
3/4"	1'-6"	3"	—	12 3/4"	7 1/8"	5 5/8"
1 1/2"	3'-4"	6"	2"	17"	10"	7"
1 3/4"	3'-10"	7"	2 1/4"	19"	11 1/4"	7 3/4"
2"	4'-3"	8"	2 1/2"	21"	12 1/2"	8 1/2"
2 1/4"	4'-9"	9"	3"	23"	13 3/4"	9 1/4"
2 1/2"	5'-3"	10"	3"	27"	16"	11"

(7) MIN DIMENSIONS GIVEN. LONGER BOLTS ARE ACCEPTABLE.

GENERAL NOTES:

DESIGN CONFORMS TO 1994 AASHTO STANDARD SPECIFICATIONS FOR STRUCTURAL SUPPORTS FOR HIGHWAY SIGNS, LUMINAIRES AND TRAFFIC SIGNALS AND INTERIM REVISIONS THERETO.
REINFORCING STEEL ~~SHALL~~ CONFORM TO ITEM 440.
CONCRETE ~~SHALL BE~~ CLASS A OR C.
THREADS FOR ANCHOR BOLTS AND NUTS ~~SHALL BE~~ ROLLED OR CUT THREADS OF UNIFIED NATIONAL COARSE THREAD SERIES EXCEPT FOR A193B7 BOLTS WHICH ~~SHALL~~ HAVE 8 PITCH THREAD SERIES. BOLTS AND NUTS ~~SHALL~~ HAVE CLASS 2A AND 2B FIT TOLERANCES.
GALVANIZED NUTS ~~SHALL BE~~ TAPPED AFTER GALVANIZING.
ANCHOR BOLTS THAT ARE 1" IN DIAMETER OR LESS ~~SHALL~~ CONFORM TO ASTM A36. ANCHOR BOLTS LARGER THAN 1" IN DIAMETER SHALL CONFORM TO A36M55 IN ACCORDANCE WITH THE ITEM. "ANCHOR BOLTS" OR ASTM A193B7 OR A687. GALVANIZE OR COAT WITH ZINC-RICH PAINT A MINIMUM OF THE UPPER 14 INCHES OF ALL ANCHOR BOLTS UNLESS OTHERWISE NOTED.
EXPOSED NUTS ~~SHALL BE~~ GALVANIZED OR COATED WITH ZINC-RICH PAINT. WASHERS ~~SHALL BE~~ GALVANIZED.
TEMPLATES AND EMBEDED NUTS NEED NOT BE GALVANIZED.

EXAMPLE:

1. FOR 80MPH DESIGN WIND SPEED, FOUNDATION 30-A CAN SUPPORT UP TO A 32' ARM WITH ANOTHER ARM UP TO 28'
2. FOR 100MPH DESIGN WIND SPEED, FOUNDATION 36-A CAN SUPPORT A SINGLE 36' MAST ARM.

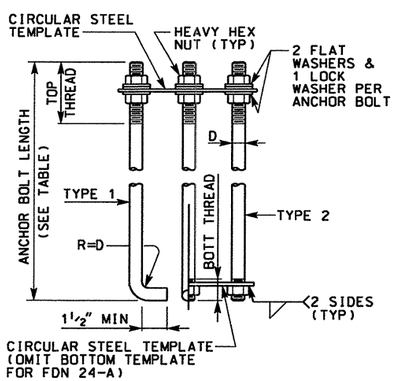

ANCHOR BOLT ASSEMBLY

INSTALLATION PROCEDURE:

THREADS OF ANCHOR BOLTS ~~SHALL BE~~ COATED WITH PIPE JOINT COMPOUND PRIOR TO INSTALLATION OF UPPER NUTS WHEN ERECTING POLE. AFTER POLE IS PLUMBED AND IN PERMANENT ALIGNMENT. THE EXPOSED THREADS OF PAINTED BOLTS ~~SHALL BE~~ CLEANED AND AN ADDITIONAL COATING OF ZINC-RICH PAINT APPLIED TO SEAL THE BOLT THREAD-NUT JOINT.

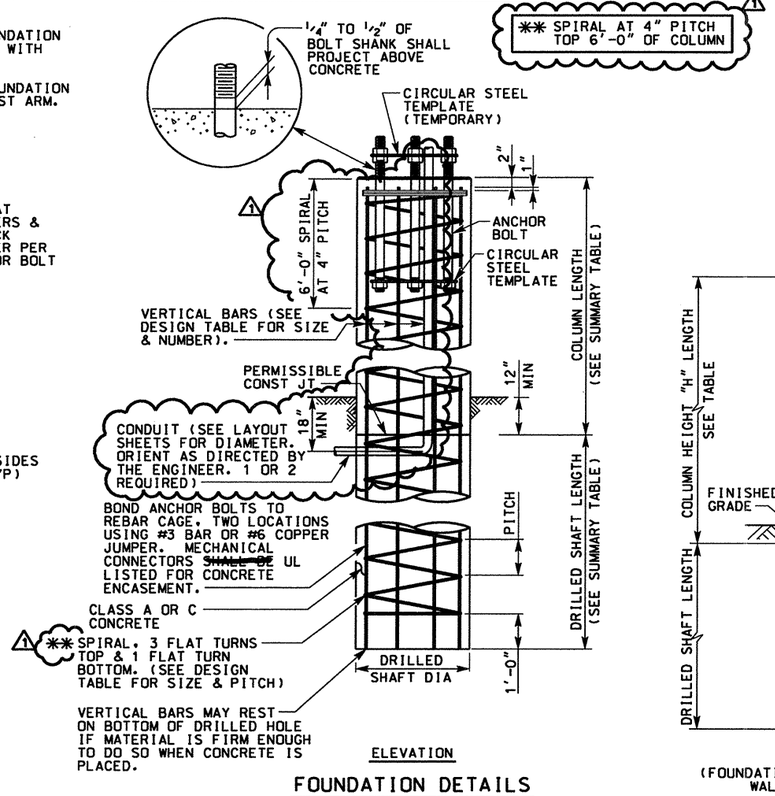

FOUNDATION DETAILS

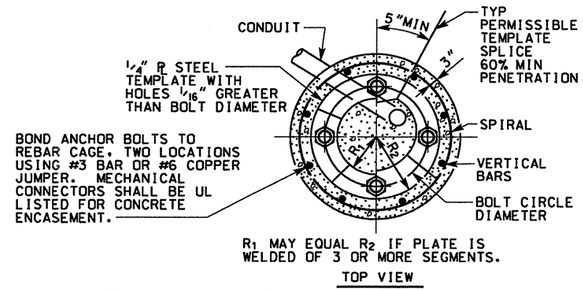

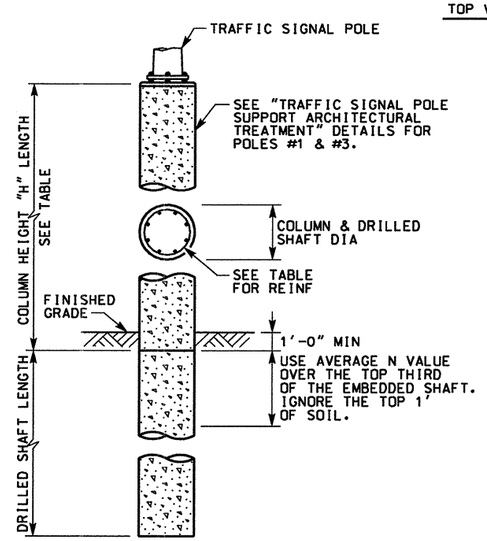

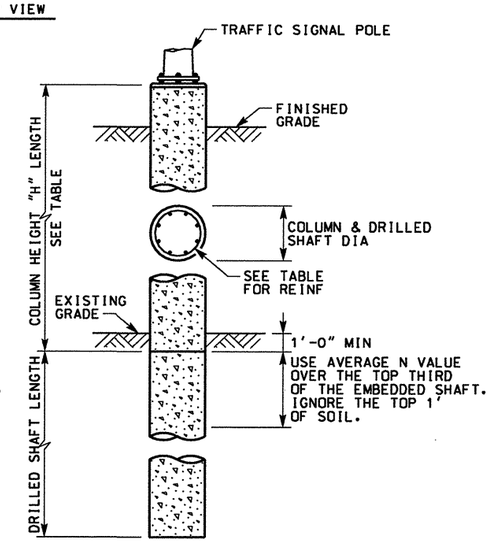

HS25 LOADING

DATE	BY	REV	REVISION
7/12/05	SRT	01	REV FDN TYPE & DRILLED SHAFT LENGTHS

STATE OF TEXAS — STEPHANIE R. TREVINO — 92038 — LICENSED — PROFESSIONAL ENGINEER

THE SEAL APPEARING ON THIS DOCUMENT WAS AUTHORIZED BY STEPHANIE R. TREVINO PE 92038, ON JULY 12, 2005

KBR
Engineered by KBR Technical Services, Inc

©2004 Texas Department of Transportation

IH 35
LOOP 20 TO UNIROYAL ROAD
CARRIER DRIVE
TRAFFIC SIGNAL POLE
COLUMN & FOUNDATION
TS-FD-99 (MOD)
SHEET 1 OF 1

FED RD DIV NO	FEDERAL AID PROJECT NO	SHEET NO
6	NH-2002 (79)	706
STATE	STATE DIST	COUNTY
TEXAS	LAREDO	WEBB
CONT	SECT / JOB	HIGHWAY NO
0018	05 / 062. ETC	IH 35

NOTES:

1. DESIGNED ACCORDING TO AASHTO 1996 STANDARDS AND INTERIM SPECIFICATIONS.
2. ALL DIMENSIONS TO THE REINFORCING STEEL ARE TO ℄ OF BAR UNLESS NOTED OTHERWISE.
3. CONCRETE STRENGTH F'c=3,600 PSI.
4. ALL REINFORCING SHALL BE GRADE 60.
5. ALL REINFORCING STEEL IN DRILLED SHAFT INCLUDED IN PRICE BID FOR DRILLED SHAFT.
6. FOR SECTIONS AND BAR DETAILS SEE SHEET 2 OF 2.

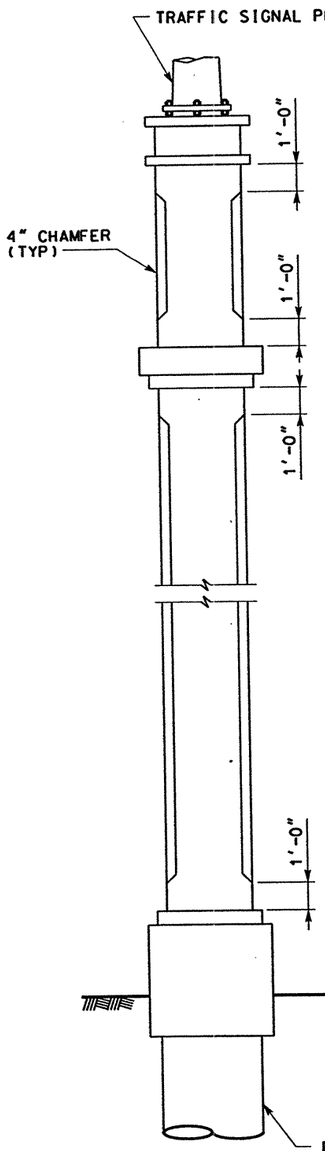

ELEVATION

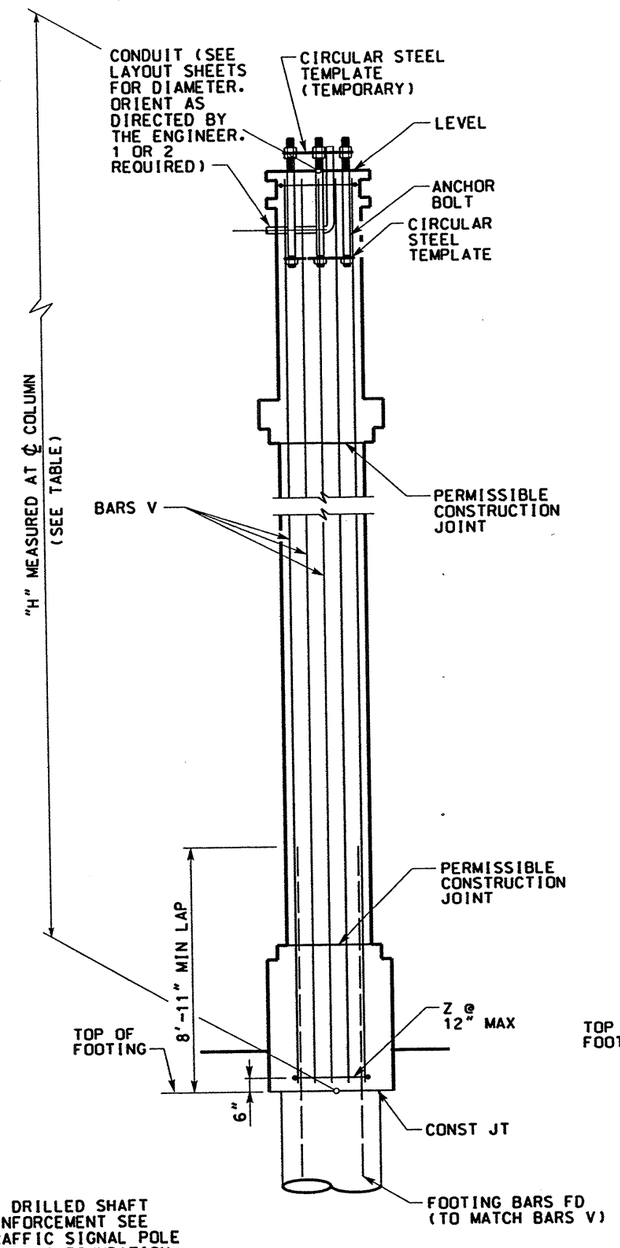

ELEVATION
(SHOWING MAIN REINFORCEMENT)

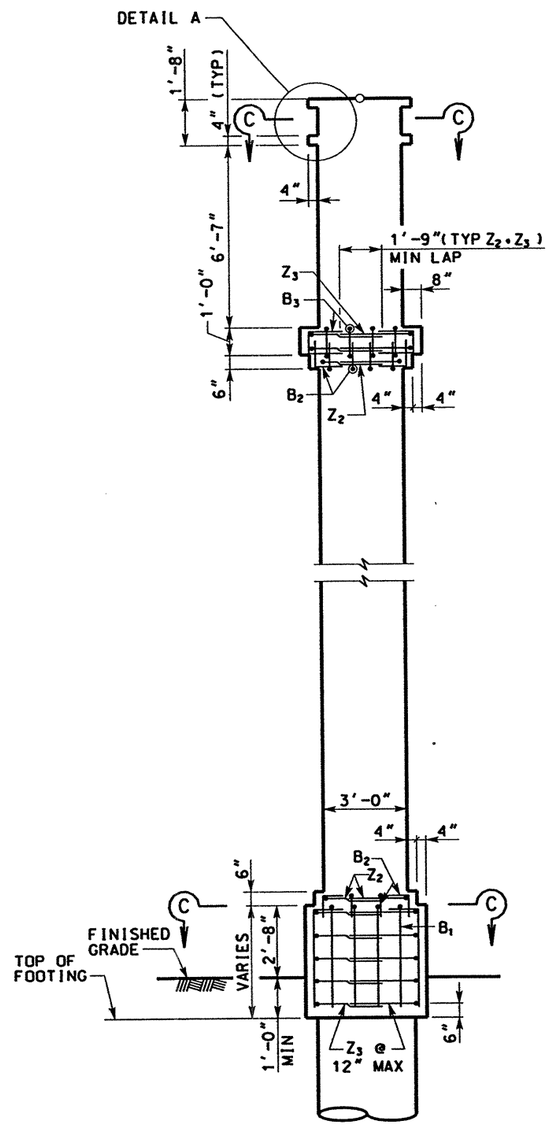

ELEVATION
(FRONT VIEW)
(SHOWING ARCHITECTURAL REINFORCEMENT)

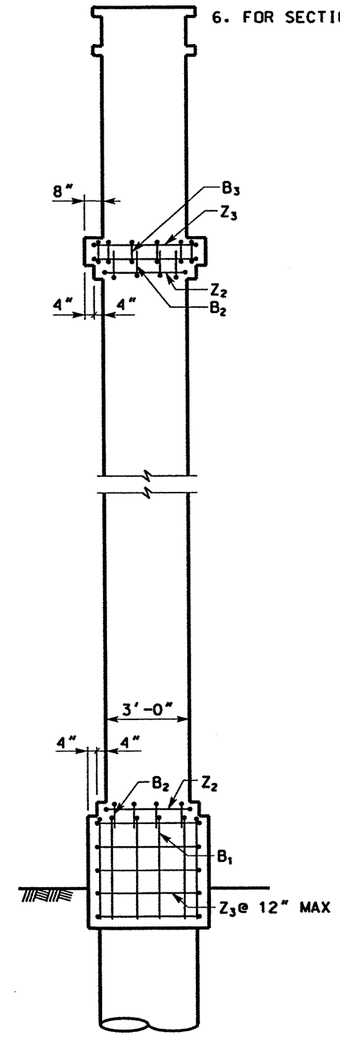

ELEVATION
(SIDE VIEW)
(SHOWING ARCHITECTURAL REINFORCEMENT)

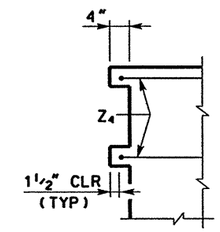

DETAIL A

STATE OF TEXAS
JAMES B. HORNSBY
81485
REGISTERED PROFESSIONAL ENGINEER

THE SEAL APPEARING ON THIS DOCUMENT WAS AUTHORIZED BY JAMES B. HORNSBY PE 81485, ON APRIL 18, 2003

KBR
Engineered by KBR Technical Services, Inc

©2003 Texas Department of Transportation

IH 35
LOOP 20 TO UNIROYAL ROAD
TRAFFIC SIGNAL
POLE SUPPORT
ARCHITECTURAL TREATMENT

SHEET 1 OF 2

FED RD DIV NO	FEDERAL AID PROJECT NO		SHEET NO
6	NH-2002 (79)		707
STATE	STATE DIST		COUNTY
TEXAS	LAREDO		WEBB
CONT	SECT	JOB	HIGHWAY NO
0018	05	062, ETC	IH 35

REF FILE(S): J01LOP01.BDR, BDR LV ON = 48,57,58,60-62
b70bdp21.dgn-02 HOUFILE023 \HCIVIL\CF0130\ 4/18/2003

TABLE OF VARIABLE COLUMN QUANTITIES								CONSTANT QUANT (LB)	TOTAL ESTIMATED QUANTITIES PER COLUMN	
LOCATION	COL NO	"H" (FT)	BARS V # 9			BARS Z_1 # 5 - 8'-4"		ARCHITECT REINF BARS	REINF STEEL	CLASS "C" CONC
			NO	LENGTH	WEIGHT (LB)	NO	WEIGHT (LB)		(LB)	(CY)
TRES EQUIS	1	34	16	33'-10"	1841	34	296	309	2446	13.3
	3	29	16	28'-10"	1569	29	252	309	2130	11.6
CARRIER DRIVE	1	20	16	19'-10"	1079	20	174	309	1562	8.6
	3	28	16	27'-10"	1514	28	243	309	2066	11.3

TABLE OF ESTIMATED QUANTITIES ARCHITECTURAL TREATMENT REINFORCEMENT				
BAR	NO	SIZE	LENGTH	WEIGHT
B_1	20	4	5'-0"	67
B_2	28	4	2'-4"	44
B_3	20	4	3'-8"	49
Z_2	4	4	8'-6"	23
Z_3	14	4	9'-10"	92
Z_4	8	4	6'-4"	34
TOTAL REINFORCING STEEL (LB)				309

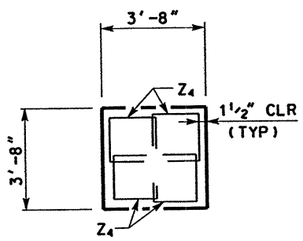

SECTION A-A

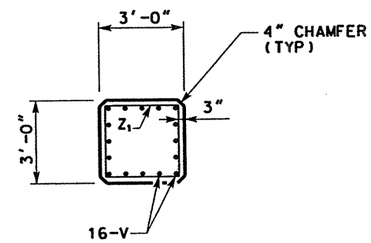

SECTION B-B

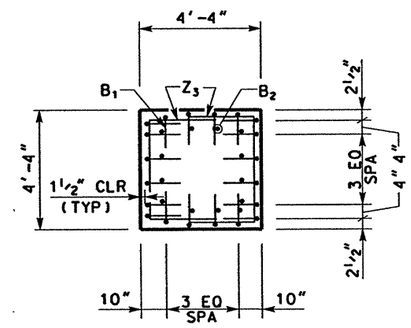

SECTION C-C

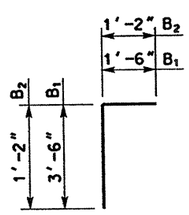

BARS B

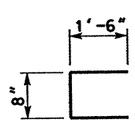

BARS B3

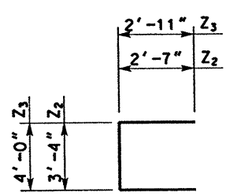

BARS Z

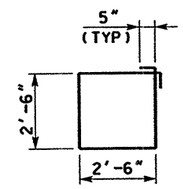

BARS Z_1

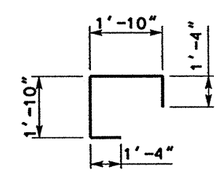

BARS Z_4

HS25 LOADING

STATE OF TEXAS
JAMES B. HORNSBY
81485
REGISTERED PROFESSIONAL ENGINEER

THE SEAL APPEARING ON THIS DOCUMENT WAS AUTHORIZED BY JAMES B. HORNSBY PE 81485, ON APRIL 18, 2003

KBR
Engineered by KBR Technical Services, Inc

©2003 Texas Department of Transportation

IH 35
LOOP 20 TO UNIROYAL ROAD
TRAFFIC SIGNAL
POLE SUPPORT
ARCHITECTURAL TREATMENT

SHEET 2 OF 2

FED RD DIV NO	FEDERAL AID PROJECT NO		SHEET NO
6	NH-2002 (79)		708
STATE	STATE DIST		COUNTY
TEXAS	LAREDO		WEBB
CONT	SECT	JOB	HIGHWAY NO
0018	05	062, ETC	IH 35

REF FILE(S): J01LOP01.BDR, BDR LV ON = 48:57:58:60-62
b70b6p22.dgn-03 HOUFILE023 \HCIVIL\CF0130\ 4/18/2003

ELECTRICAL SERVICE POLE SUMMARY

SERVICE POLE NUMBER	SHEET NUMBER	STATION NUMBER	ELECTRICAL SERVICE DESCRIPTION FOR ALL SERVICES (SEE ED(5)-00)	SERVICE CONDUIT SIZE (RMC)	SERVICE CONDUCTORS NO./SIZE	SAFETY SWITCH AMPS	SWITCH AMP/FUSES	CKT. BRK. POLE/AMP	TWO-POLE CONTACTOR AMPS	PANELBD./ LOADCENTER AMP RATING (MIN)	CIRCUIT DESCRIPTION	BRANCH CKT. BRK. POLE/AMPS	KVA LOAD
PP 1	ITS 4 OF 12	247+00	TYD(120/240)060(NS)GS(N)TP(O)	1-1/2"	3/#4	N/A	N/A	2P/60	N/A	60	DMS CABINET	2P/30	7.2
PP 2	ITS 6 OF 12	290+00	TYD(120/240)060(NS)GS(N)TP(O)	1-1/2"	3/#4	N/A	N/A	2P/60	N/A	60	Ty3 CABINET	1P/20	2.4
PP 3	ITS 7 OF 12	333+00	TYD(120/240)100(NS)GS(N)TP(O)	1-1/2"	3/#4	N/A	N/A	2P/100	N/A	100	HUB BUILDING	2P/50	12.0
PP 4	ITS 8 OF 12	355+00	TYD(120/240)060(NS)GS(N)TP(O)	1-1/2"	3/#4	N/A	N/A	2P/60	N/A	60	CCTV CAMERA	1P/20	2.4
PP 5	ITS 10 OF 12	383+50	TYD(120/240)060(NS)GS(N)TP(O)	1-1/2"	3/#4	N/A	N/A	2P/60	N/A	60	Ty3 CABINET	1P/20	2.4
PP 6	ITS 10 OF 12	406+00	TYD(120/240)060(NS)GS(N)TP(O)	1-1/2"	3/#4	N/A	N/A	2P/60	N/A	60	Ty3 CABINET	1P/20	2.4
PP 7	ITS 11 OF 12	424+50	TYD(120/240)100(NS)GS(N)TP(O)	1-1/2"	3/#4	N/A	N/A	2P/100	N/A	100	HUB BUILDING CCTV CAMERA	2P/50 1P/20	12.0 2.4
PP 8	ITS 12 OF 12	446+50	TYD(120/240)060(NS)GS(N)TP(O)	1-1/2"	3/#4	N/A	N/A	2P/60	N/A	60	DMS CABINET	2P/30	7.2

STATE OF TEXAS
DANNY MAGEE
83653
LICENSED
PROFESSIONAL ENGINEER

The seal appearing on this document was authorized by DANNY MAGEE PE 83653, on MAY 1, 2003.

©2003 Texas Department of Transportation

IH 35
LOOP 20 TO UNIROYAL ROAD

ITS
ELECTRICAL
SERVICE POLE
SUMMARY

SHEET 1 OF 1

FED RD DIV NO	FEDERAL AID PROJECT NO		SHEET NO
6	NH-2002 (79)		709
STATE	STATE DIST		COUNTY
TEXAS	LAREDO		WEBB
CONT	SECT	JOB	HIGHWAY NO
0018	05	062, ETC	IH 35

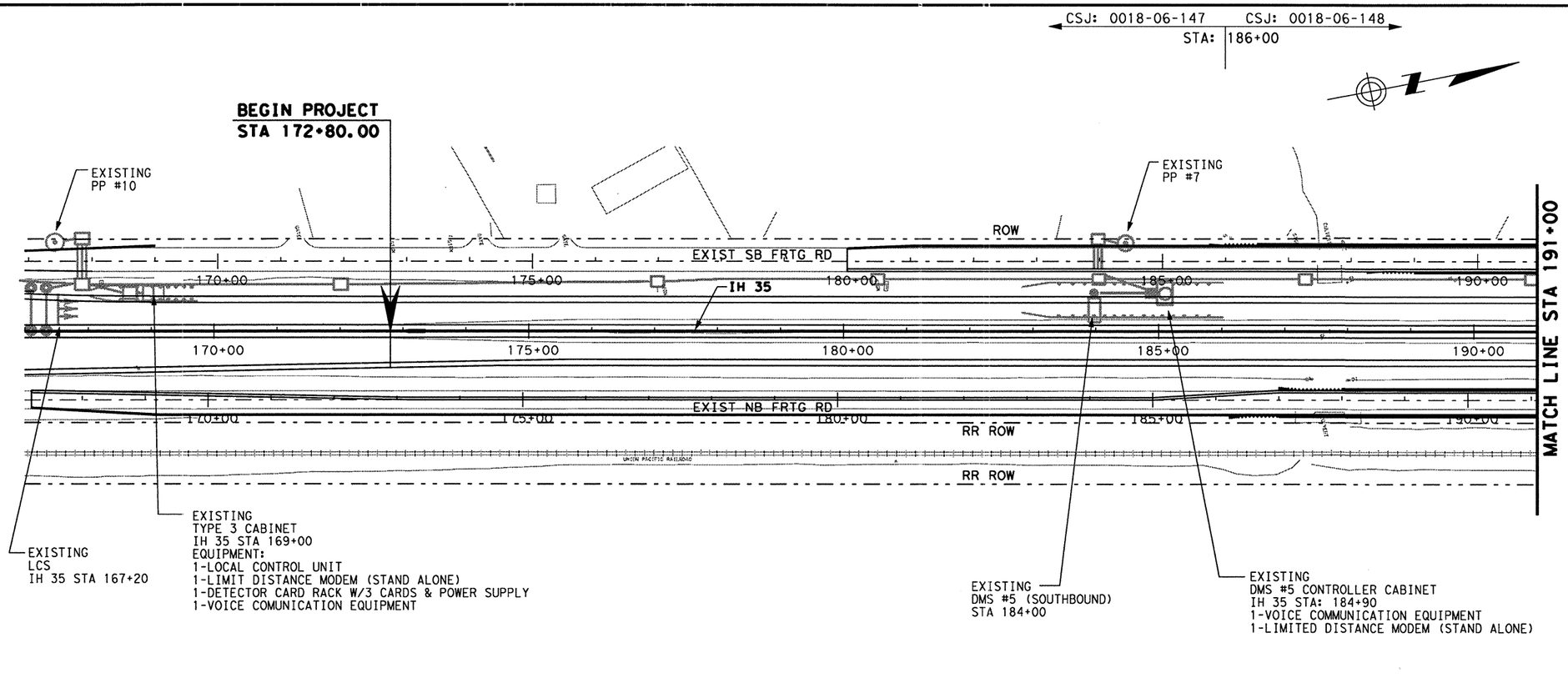

LEGEND

- EXISTING GROUND BOX
- EXISTING CONDUIT
- EXISTING DMS CONTROLLER
- EXISTING DMS SIGN CANTI
- EXISTING DMS SIGN"T"MOUN
- EXISTING POWER POLE
- EXISTING TYPE 3 CABINET
- EXISTING LCS
- EXISTING CONDUIT (BORE)
- EXISTING HUB BUILDING
- EXISTING CCTV
- PROP GROUND BOX, TY 1
- PROP GROUND BOX, TY 2
- PROP LCS'S
- PROP CCTV
- PROP CONDUIT, TRENCH
- PROP CONDUIT, BORE
- PROP GROUND BOX, TY C
- PROP LOOP DETECTOR
- PROP DMS SIGN, T-MOUNT
- PROP DMS CONTROLLER
- PROP POWER POLE
- PROP TYPE 3 CABINET
- PROP HUB BUILDING
- XXX RUN NUMBER
- XXX GROUND BOX NUMBER

0 100 200
SCALE: 1" = 200'

NOTE:

1. NO ITS WORK ON THIS SHEET; FOR CONTRACTOR INFORMATION ONLY.

STATE OF TEXAS
DANNY MAGEE
83653
REGISTERED PROFESSIONAL ENGINEER

The seal appearing on this document was authorized by DANNY MAGEE PE 83653, on MAY 1, 2003.

©2002 Texas Department of Transportation

IH 35
LOOP 20 TO UNIROYAL ROAD

TRAFFIC MANAGEMENT STA 167+00 TO STA 191+00

SHEET 1 OF 12

FED RD DIV NO	FEDERAL AID PROJECT NO		SHEET NO
6	NH-2002 (79)		710
STATE	STATE DIST		COUNTY
TEXAS	LAREDO		WEBB
CONT	SECT	JOB	HIGHWAY NO
0018	05	062, ETC	IH 35

2003/ITS/PROJECT/WEB/0018-05-062IH35WIDEN/IH35WIDENCAD; FILE NAME: B60LOP01.DGN

b60lop01.dgn-02 HOUFTIF023 \hcivil\cf0130\ $DATF$ \txdot\laredo\kbr\b60lop01.dgn

j01lop01.uti, uti LV ON • 1-63
miloint.row , row LV ON • 1-22,24-63
j01lop02.eop, eop LV ON • 1-5,7-11,13-17,19-63
j01lop01.bck, bck LV ON • 2,9-10,14,17,21,25,28
j01lop01.alg, alg LV ON • 1-6,35-39
REF FILE(S): j01lop01.bdr, bdr LV ON • 17,46,57-58,60-63

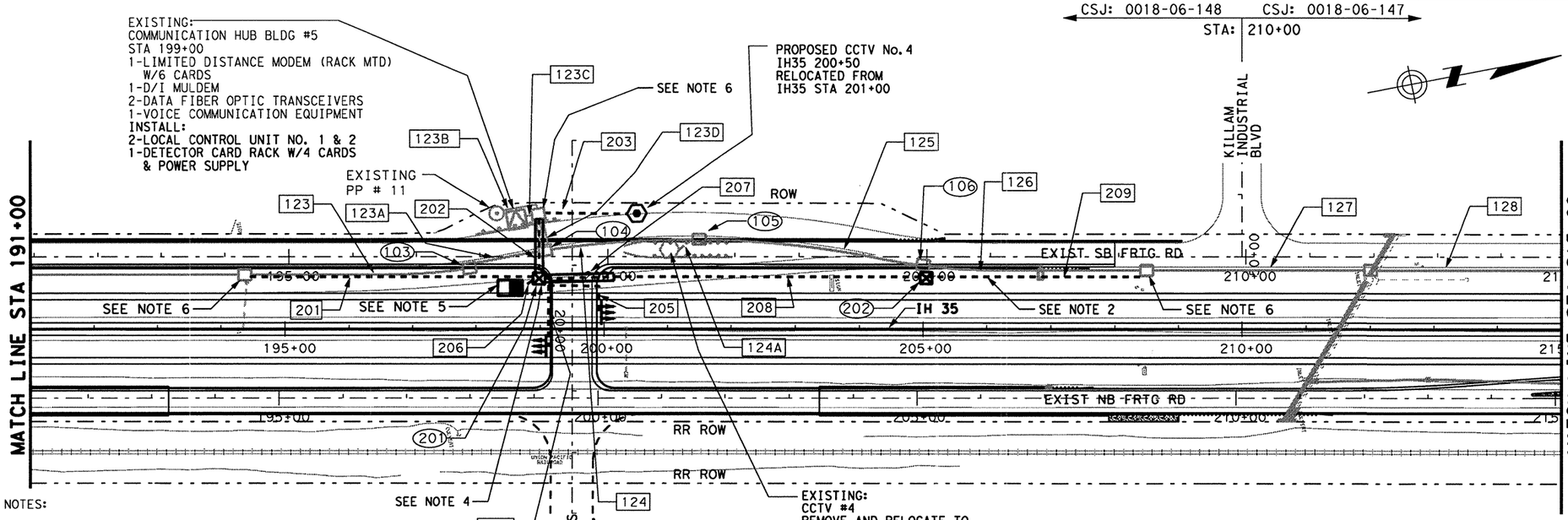

LEGEND

- EXISTING GROUND BOX
- EXISTING CONDUIT
- EXISTING DMS CONTROLLER
- EXISTING DMS SIGN CANTI
- EXISTING DMS SIGN"T"MOUN
- EXISTING POWER POLE
- EXISTING TYPE 3 CABINET
- EXISTING LCS
- EXISTING CONDUIT (BORE)
- EXISTING HUB BUILDING
- EXISTING CCTV
- PROP GROUND BOX, TY 1
- PROP GROUND BOX, TY 2
- PROP LCS'S
- PROP CCTV
- PROP CONDUIT, TRENCH
- PROP CONDUIT, BORE
- PROP GROUND BOX, TY C
- PROP LOOP DETECTOR
- PROP DMS SIGN, T-MOUNT
- PROP DMS CONTROLLER
- PROP POWER POLE
- PROP TYPE 3 CABINET
- PROP HUB BUILDING
- XXX RUN NUMBER
- XXX GROUND BOX NUMBER

0 100 200
SCALE: 1" = 200'

NOTES:

1. ALL BORES UNDER MAINLANES AND FRONTAGE ROADS ~~SHALL BE~~ ENCASED IN STEEL. SEE "ITS GENERAL DETAILS-TRENCHING."

2. PROPOSED MULTIDUCT CONDUIT ON THIS SHEET ~~SHALL BE~~ INSTALLED AT 15' OFFSET FROM FACE OF RETAINING WALL.

3. ALL EXISTING CABLES IN RUNS 123, 123A, 123D, 123C, 124, 125, AND 126 ~~SHALL BE~~ REROUTED ONCE NEW RUNS 201, 202, 207, 208 AND 209 HAVE BEEN INSTALLED.

4. PROVIDE 2-2" CONDUITS FROM THE PROPOSED TRAFFIC SIGNAL CONTROL FOUNDATION LOCATED AT TOP OF BRIDGE TO GROUND BOX 201 (SEE SIGNAL LAYOUT TRES EQUIS BLVD).

5. PROPOSED TYPE 3 CABINET ~~SHALL BE~~ FOR FUTURE USE AND ~~SHALL~~ HOUSE FUTURE ITS EQUIPMENT.
EXACT LOCATION ~~SHALL BE~~ DETERMINED BY THE ENGINEER.

6. THE CONTRACTOR ~~SHALL~~ INSTALL THE PROPOSED CONDUITS THROUGH ONE OF THE KNOCK-OUTS IN THE EXISTING GROUND BOX. THE CONDUITS ~~SHALL~~ EXTEND 4" INTO THE GROUND BOX.

7. RUNS 204 AND 205 BEGIN IN GROUND BOX 201 AND ~~SHALL BE~~ ATTACHED TO STRUCTURE WITH RMC AS SHOWN ON "ITS RMC GENERAL DETAILS."

8. EXISTING CONDUITS 123, 123A, 123D, 124, 124A, 125, 126, AND GROUND BOXES 103, 104, 105, AND 106 ~~SHALL BE~~ REMOVED ONCE EXISTING CABLES HAVE BEEN REROUTED.

EQUIPMENT SUMMARY (THIS SHEET)		QUANTITIES	QUANTITIES
DESCRIPTION	UNIT	0018-06-148	0018-06-147
GROUND BOX TY 1	EA	2	
CCTV FOUNDATION (36")	LF	10	
TYPE 3 CABINET	EA	1	
LANE CONTROL SIGNALS	EA	6	
LOCAL CONTROL UNIT	EA	2	
DETECTOR CARD RACK	EA	1	
DETECTOR CARD UNIT	EA	4	
POWER SUPPLY	EA	1	
REM. AND REL. CCTV EQUIPMENT	EA	1	

CONDUIT AND CABLE SUMMARY (THIS SHEET)

DESCRIPTION	RUN NO.		201	202	203	204	205	206	207	208	209	123	123A	123B	123C	123D	124	124A	125	126	127	128
	RUN LENGTH		470	115	160	135	150	50	120	490	345	351	120	25	15	60	245	45	355	350	350	300
	0018-06-148	0018-06-147																				
CONDUIT (RM) (2")	285					1	1							EX 2								
2" (PVC)(SCHD 80)	3270		2		2			2	2	2	2	EX 2	EX 2				EX 2	EX 2				
2" (PVC)(SCHD 80) BORE																						
3" (PVC)(SCHD 80)	50							1														
3" (PVC)(SCHD 80) BORE	230			2												EX 2						
4" (PVC)(SCHD 80)	50							1														
4" (PVC)(SCHD 80) BORE																						
MULTIDUCT CONDUIT (PVC) (4IN) (4 WAY)	1305		1							1	1	EX 1	EX 1				EX 1		EX 1	EX 1	EX 1	EX 1
MULTIDUCT CONDUIT (PVC) (4IN) (4 WAY) BORE	350			2					1							EX 2						
ELEC CONDR (NO. 10) INSULATED																						
ELEC CONDR (NO. 6) INSULATED	480				3									EX 7	EX 4	EX 3	EX 3	EX 3				
COMM CABLE (6 PAIR)(22 AWG)	160		RE 3	RE 3	1							EX 3	EX 3		EX 4	EX 4	EX 1	EX 1				
TRAFFIC SIGNAL CBL (TY A)(7 CONDR)(12 AWG)	1635			6		3	3								6							
TRAFFIC SIGNAL CBL (TY C)(2 CONDR)(12 AWG)	9880	4000		8					8	8	8				8						8	8
FIBER OPTIC CABLE (SINGLE MODE) (72 FIBERS)			RE 1	RE 2					RE 1	RE 1	RE 1	EX 1	EX 1		EX 2	EX 2	EX 1		EX 1	EX 1	EX 1	EX 1
FIBER OPTIC CABLE (SINGLE MODE) (DROP CABLE)	160				1										EX 1	EX 1	EX 1	EX 1				
RETRACT AND REROUTE FIBER OPTIC CABLE	1496											1	1		1	1	1		1	1		

RE= REROUTED
EX= EXISTING

STATE OF TEXAS
DANNY MAGEE
83653
REGISTERED PROFESSIONAL ENGINEER

The seal appearing on this document was authorized by DANNY MAGEE PE 83653, on MAY 1, 2003.

©2002 Texas Department of Transportation

IH 35
LOOP 20 TO UNIROYAL ROAD

TRAFFIC MANAGEMENT STA 191+00 TO STA 215+00

SHEET 2 OF 12

FED RD DIV NO	FEDERAL AID PROJECT NO	SHEET NO
6	NH-2002 (79)	711
STATE	STATE DIST	COUNTY
TEXAS	LAREDO	WEBB
CONT / SECT / JOB		HIGHWAY NO
0018 / 05 / 062, ETC		IH 35

REF FILE(S): J01lop01.bdr, J01lop01.alg, J01lop01.bnk, J01lop02.cap, J01lop01.nti, mileint.row, J01lop01.nti
LV ON = 17,46,57-58,60-63
LV ON = 1-6,35-39
LV ON = 2,9-16,18,21,25,28
LV ON = 1-5,7-11,13-17,19-63
LV ON = 1-23,24-63
LV ON = 1-63
2003/ITS/PROJECT/WEB/0018-05-062IH35WIDEN/IH35WIDENCAD; FILE NAME: B60LOP02.DGN
b601nn02.dgn-01 HOUFTI F023 \hcivil\cf0130\ @DATF@

CSJ: 0018-06-147

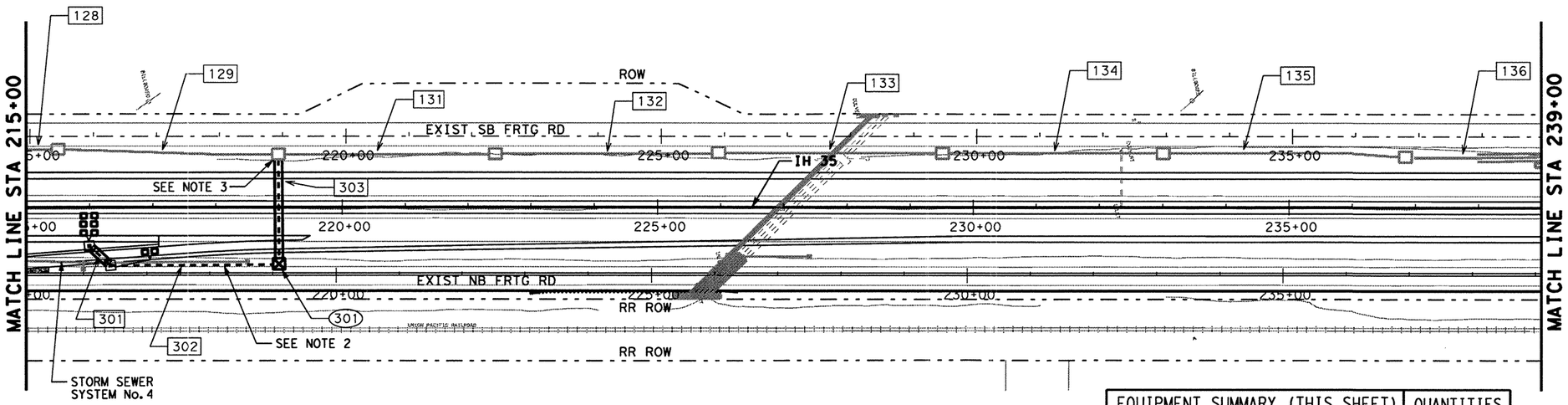

NOTE:

1. ALL BORES UNDER MAINLANES AND FRONTAGE ROADS ~~SHALL BE~~ ENCASED IN STEEL. SEE "ITS GENERAL DETAILS-TRENCHING."

2. PROPOSED MULITDUCT CONDUIT ON THIS SHEET ~~SHALL BE~~ INSTALLED AT 5' OFFSET FROM STORM SEWER SYSTEM No. 4.

3. THE CONTRACTOR ~~SHALL~~ INSTALL THE PROPOSED CONDUITS THROUGH ONE OF THE KNOCK-OUTS IN THE EXISTING GROUND BOX. THE CONDUITS ~~SHALL~~ EXTEND 4" INTO THE GROUND BOX.

EQUIPMENT SUMMARY (THIS SHEET)		QUANTITIES
DESCRIPTION	UNIT	0018-06-147
GROUND BOX TY 1	EA	1
GROUND BOX TYPE C	EA	2
LOOP DETECTOR	EA	8

CONDUIT AND CABLE SUMMARY (THIS SHEET)

DESCRIPTION	RUN NO.	301	302	303	128	129	131	132	133	134	135	136
	RUN LENGTH	45	265	180	50	345	350	350	355	355	385	215
	0018-06-147											
CONDUIT (RM) (2")												
2" (PVC)(SCHD 80)	265		1									
2" (PVC)(SCHD 80) BORE	45	1										
3" (PVC)(SCHD 80)												
3" (PVC)(SCHD 80) BORE	360			2								
4" (PVC)(SCHD 80)												
4" (PVC)(SCHD 80) BORE												
MULTIDUCT CONDUIT (PVC) (4IN) (4 WAY)					EX 1	EX 1	EX 1	EX 1	EX 1	EX 1	EX 1	EX 1
MULTIDUCT CONDUIT (PVC) (4IN) (4 WAY) BORE	180			1								
ELEC CONDR (NO. 10) INSULATED												
ELEC CONDR (NO. 6) INSULATED												
COMM CABLE (6 PAIR)(22 AWG)												
TRAFFIC SIGNAL CBL (TY A)(7 CONDR)(12 AWG)												
TRAFFIC SIGNAL CBL (TY C)(2 CONDR)(12 AWG)	6990	6	8	8	8	8						
FIBER OPTIC CABLE (SINGLE MODE) (72 FIBERS)					EX 1	EX 1	EX 1	EX 1	EX 1	EX 1	EX 1	EX 1
FIBER OPTIC CABLE (SINGLE MODE) (DROP CABLE)												

EX= EXISTING

LEGEND

- EXISTING GROUND BOX
- EXISTING CONDUIT
- EXISTING DMS CONTROLLER
- EXISTING DMS SIGN CANTI
- EXISTING DMS SIGN"T"MOUN
- EXISTING POWER POLE
- EXISTING TYPE 3 CABINET
- EXISTING LCS
- EXISTING CONDUIT (BORE)
- EXISTING HUB BUILDING
- EXISTING CCTV
- PROP GROUND BOX, TY 1
- PROP GROUND BOX, TY 2
- PROP LCS'S
- PROP CCTV
- PROP CONDUIT, TRENCH
- PROP CONDUIT, BORE
- PROP GROUND BOX, TY C
- PROP LOOP DETECTOR
- PROP DMS SIGN, T-MOUNT
- PROP DMS CONTROLLER
- PROP POWER POLE
- PROP TYPE 3 CABINET
- PROP HUB BUILDING
- XXX RUN NUMBER
- XXX GROUND BOX NUMBER

0 100 200
SCALE: 1" = 200'

STATE OF TEXAS
DANNY MAGEE
83653
REGISTERED PROFESSIONAL ENGINEER

The seal appearing on this document was authorized by DANNY MAGEE PE 83653, on MAY 1, 2003.

©2002 Texas Department of Transportation

IH 35
LOOP 20 TO UNIROYAL ROAD

TRAFFIC MANAGEMENT
STA 215+00 TO
STA 239+00

SHEET 3 OF 12

FED RD DIV NO	FEDERAL AID PROJECT NO		SHEET NO
6	NH-2002 (79)		712
STATE	STATE DIST		COUNTY
TEXAS	LAREDO		WEBB
CONT	SECT	JOB	HIGHWAY NO
0018	05	062, ETC	IH 35

REF FILE(S): j0llop01.tel, tel LV ON = 1-63
j0llop01.bdr, bdr LV ON = 17,46,57,58,60-62
j0llop01.nlg, nlg LV ON = 1-6,35-39
j0llop01.bnk, bnk LV ON = 2,9,10,14,17,21,25,28
j0llop02.cap, cap LV ON = 1-11,13-17,19-63
milelnt.row, row LV ON = 1-22,24-63
j0llop01.nll, nll LV ON = 1-63
b60lop03.dgn HOUFIF023 \hcivil\cxf0130\ $DATE$
2003/ITS/PROJECT/WEB/0018-05-062IH35WIDEN/IH35WIDENCAD; FILE NAME: B60LOP03.DGN

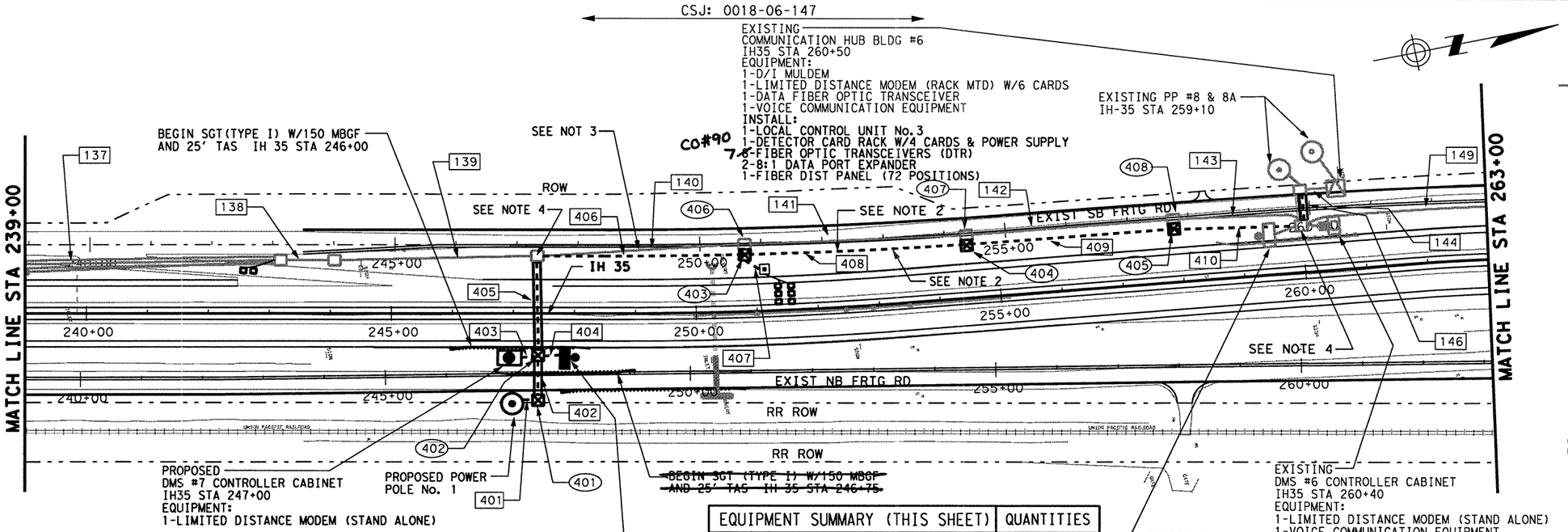

NOTE:

1. ALL BORES UNDER MAINLANES AND FRONTAGE ROAD ~~SHALL BE~~ ENCASED IN STEEL. SEE "ITS GENERAL DETAILS-TRENCHING."

2. PROPOSED MULTIDUCT CONDUIT ON THIS SHEET ~~SHALL BE~~ INSTALLED AT 15' OFFSET FROM EDGE OF PROPOSED PAVEMENT.

3. ALL EXISTING CABLES IN RUNS 140, 141, 142, 143, 146, AND 144 ~~SHALL BE~~ REROUTED ONCE THE NEW RUNS 406, 408, 409, 410 AND THE EXTRA CONDUIT ON RUN 146 HAVE BEEN INSTALLED.

4. THE CONTRACTOR ~~SHALL~~ INSTALL THE PROPOSED CONDUITS THROUGH ONE OF THE KNOCK-OUTS IN THE EXISTING GROUND BOX. THE CONDUITS ~~SHALL~~ EXTEND 4" INTO THE GROUND BOX.

5. EXISTING CONDUITS 140, 141, 142, 143 AND GROUND BOXES 406, 407, AND 408 ~~SHALL BE~~ REMOVED ONCE EXISTING CABLES HAVE BEEN REROUTED.

EQUIPMENT SUMMARY (THIS SHEET)		QUANTITIES
DESCRIPTION	UNIT	0018-06-147
GROUND BOX TY1	EA	5
GROUND BOX TY C	EA	1
LOCAL CONTROL UNIT	EA	1
DETECTOR CARD RACK	EA	1
DETECTOR CARD UNIT	EA	4
POWER SUPPLY	EA	1
LOOP DETECTOR	EA	8
LIM. DIS. MODEM (STAND ALONE)	EA	1
DMS SIGN AND CONTROLLER	EA	1
DMS FOUNDATION (48")	LF	26
OVHD SIGN SUPPORT	EA	1

EQUIPMENT SUMMARY (THIS SHEET)		QUANTITIES
DESCRIPTION	UNIT	0018-06-147
ELECTRICAL SERVICE POWER POLE	EA	1
8:1 DATA PORT EXPANDER	EA	2
FIB DIST PANEL (72 POSITION)	EA	1
TERM ANCHOR SECTION (12 GA)	EA	1 ~~2~~
MTL BM GD FE(12 GA)(TIM POST)	LF	150 ~~300~~
SINGLE GD RIAL TERM (TY I)	EA	1 ~~2~~
FIBER OPTIC TRANSCEIVER (DTR)	EA	7 ~~8~~ CO#90

LEGEND

- EXISTING GROUND BOX
- EXISTING CONDUIT
- EXISTING DMS CONTROLLER
- EXISTING DMS SIGN CANTI
- EXISTING DMS SIGN"T"MOUN
- EXISTING POWER POLE
- EXISTING TYPE 3 CABINET
- EXISTING LCS
- EXISTING CONDUIT (BORE)
- EXISTING HUB BUILDING
- EXISTING CCTV
- PROP GROUND BOX, TY 1
- PROP GROUND BOX, TY 2
- PROP LCS'S
- PROP CCTV
- PROP CONDUIT, TRENCH
- PROP CONDUIT, BORE
- PROP GROUND BOX, TY C
- PROP LOOP DETECTOR
- PROP DMS SIGN, T-MOUNT
- PROP DMS CONTROLLER
- PROP POWER POLE
- PROP TYPE 3 CABINET
- PROP HUB BUILDING
- XXX RUN NUMBER
- XXX GROUND BOX NUMBER

0 100 200
SCALE: 1" = 200'

CONDUIT AND CABLE SUMMARY (THIS SHEET)

DESCRIPTION	RUN NO.	401	402	403	404	405	406	407	408	409	410	137	138	139	140	141	142	143	144	146	149
	RUN LENGTH	50	75	50	50	165	340	40	365	340	210	464	178	350	351	354	350	153	40	60	300
	0018-06-147																				
CONDUIT (RM) (2")																					
2" (PVC)(SCHD 80)	2650	2					2	1	2	2	2										EX 2
2" (PVC)(SCHD 80) BORE	150		2																		
3" (PVC)(SCHD 80)	150			2	1															EX 2	
3" (PVC)(SCHD 80) BORE	330					2															
4" (PVC)(SCHD 80)	200			2	2																
4" (PVC)(SCHD 80) BORE																					
MULTIDUCT CONDUIT (PVC) (4IN) (4 WAY)	1255						1		1	1	1		EX 1	EX 1	EX 1	EX 1	EX 1	EX 1			EX 1
MULTIDUCT CONDUIT (PVC) (4IN) (4 WAY) BORE	300		1			1						EX 1								1	
ELEC CONDR (NO. 8) INSULATED																					
ELEC CONDR (NO. 6) INSULATED	700	4	4	4																EX 7	EX 3
COMM CABLE (6 PAIR)(22 AWG)	1570			1		1	1		1	1	1								EX 2 P 1	EX 2 P 1	EX 1
TRAFFIC SIGNAL CBL (TY A)(7 CONDR)(12 AWG)																					
TRAFFIC SIGNAL CBL (TY C)(2 CONDR)(12 AWG)	10096						2	6	8	8	8		2	2					8	8	
FIBER OPTIC CABLE (SINGLE MODE) (72 FIBERS)	650						R 1		R 1	R 1	R 1	EX 1	EX 1	EX 1	EX 1	EX 1	EX 1	EX 1	EX 1 P 1	EX 1 P 1	1
FIBER OPTIC CABLE (SINGLE MODE) (DROP CABLE)																			EX 1	EX 1	EX 1
RETRACT AND REROUTE FIBER OPTIC CABLE	1308														1	1	1	1	1	1	
PREPARATION OF EXISTING CONDUIT	300																				1

EX = EXISTING P= PROPOSED R= REROUTED

STATE OF TEXAS
DANNY MAGEE
83653
REGISTERED PROFESSIONAL ENGINEER

The seal appearing on this document was authorized by DANNY MAGEE PE 83653, on MAY 1, 2003.

©2002 Texas Department of Transportation

IH 35
LOOP 20 TO UNIROYAL ROAD

TRAFFIC MANAGEMENT STA 239+00 TO STA 263+00

SHEET 4 OF 12

FED RD DIV NO	FEDERAL AID PROJECT NO		SHEET NO
6	NH-2002 (79)		713
STATE	STATE DIST		COUNTY
TEXAS	LAREDO		WEBB
CONT	SECT	JOB	HIGHWAY NO
0018	05	062, etc	IH 35

REF FILE(S): j0lop01.dgn, j0lop01.ldr, j0lop01.stl LV ON = 17,46,57,58,60-62
j0lop01.stl, stl LV ON = 1-63
mlcint.rsw, rsw LV ON = 1-22,24-63
j0lop02.sop, sop LV ON = 1-11,13-17,19-63
j0lop01.bak, bak LV ON = 2,9,10,14,17,21,25,28
j0lop01.dlg, dlg LV ON = 1-6,35-39
2003/ITS/PROJECT/WEB/0018-05-062IH35WIDEN/IH35WIDENCAD; FILE NAME: B60LOP04.DGN
b60lop04.dgn-02 HOUFTLF023 \hcivil\cf0130\ $DATE$

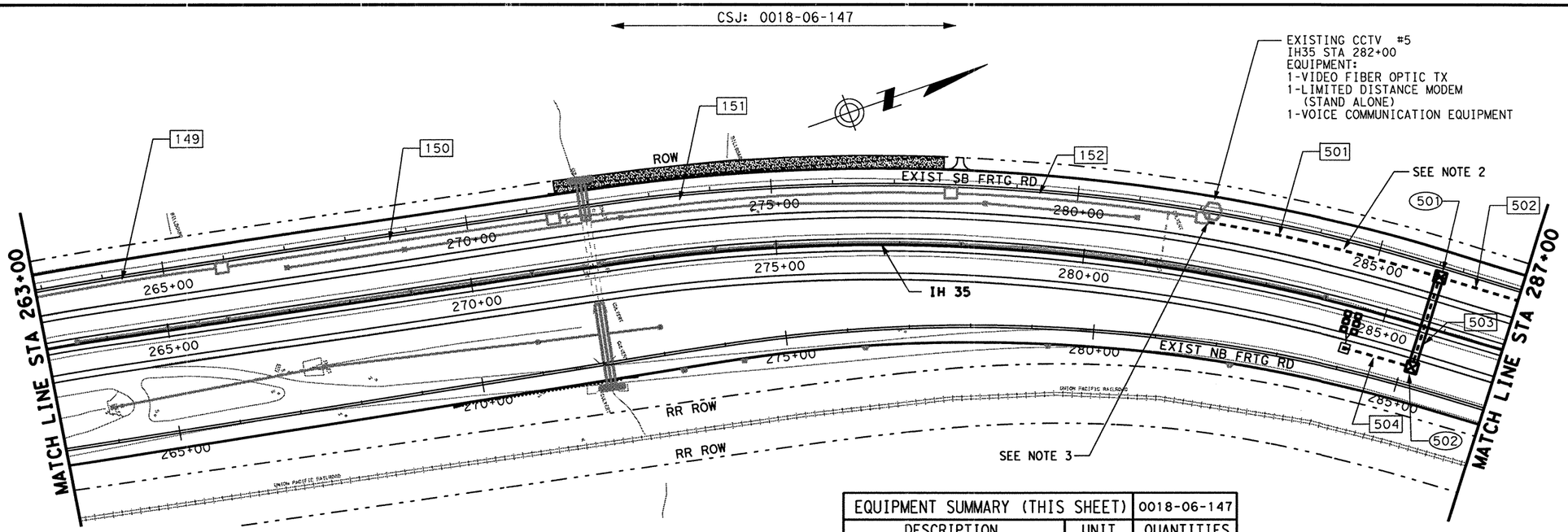

NOTE:

1. ALL BORES UNDER MAINLANES AND FRONTAGE ROADS ~~SHALL BE~~ ENCASED IN STEEL. SEE " ITS GENERAL DETAILS-TRENCHING.

2. PROPOSED MULTIDUCT CONDUIT ON THIS SHEET ~~SHALL BE~~ INSTALLED AT 15' OFFSET FROM PROPOSED EDGE OF PAVEMENT.

3. THE CONTRACTOR ~~SHALL~~ INSTALL THE PROPOSED CONDUITS THROUGH ONE OF THE KNOCK-OUTS IN THE EXISTING GROUND BOX. THE CONDUITS ~~SHALL~~ EXTEND 4" INTO THE GROUND BOX.

EQUIPMENT SUMMARY (THIS SHEET)		0018-06-147
DESCRIPTION	UNIT	QUANTITIES
GROUND BOX TY 1	EA	2
GROUND BOX TY C	EA	1
LOOP DETECTOR	EA	6

LEGEND

- EXISTING GROUND BOX
- EXISTING CONDUIT
- EXISTING DMS CONTROLLER
- EXISTING DMS SIGN CANTI
- EXISTING DMS SIGN"T"MOUN
- EXISTING POWER POLE
- EXISTING TYPE 3 CABINET
- EXISTING LCS
- EXISTING CONDUIT (BORE)
- EXISTING HUB BUILDING
- EXISTING CCTV
- PROP GROUND BOX, TY 1
- PROP GROUND BOX, TY 2
- PROP LCS'S
- PROP CCTV
- PROP CONDUIT, TRENCH
- PROP CONDUIT, BORE
- PROP GROUND BOX, TY C
- PROP LOOP DETECTOR
- PROP DMS SIGN, T-MOUNT
- PROP DMS CONTROLLER
- PROP POWER POLE
- PROP TYPE 3 CABINET
- PROP HUB BUILDING
- XXX RUN NUMBER
- (XXX) GROUND BOX NUMBER

0 100 200
SCALE: 1" = 200'

CONDUIT AND CABLE SUMMARY (THIS SHEET)

DESCRIPTION	RUN NO.	501	502	503	504	149	150	151	152
	RUN LENGTH	400	135	165	115	305	550	650	415
	0018-06-147								
CONDUIT (RM) (2")									
2" (PVC)(SCHD 80)	650	1	1		1	EX 2	EX 2	EX 2	EX 2
2" (PVC)(SCHD 80) BORE									
3" (PVC)(SCHD 80)									
3" (PVC)(SCHD 80) BORE	165			1					
4" (PVC)(SCHD 80)									
4" (PVC)(SCHD 80) BORE									
MULTIDUCT CONDUIT (PVC) (4IN) (4 WAY)	535	1	1			EX 1	EX 1	EX 1	EX 1
MULTIDUCT CONDUIT (PVC) (4IN) (4 WAY) BORE	165			1					
ELEC CONDR (NO. 8) INSULATED									
ELEC CONDR (NO. 6) INSULATED						EX 3	EX 3	EX 3	EX 3
COMM CABLE (6 PAIR)(22 AWG)						EX 1	EX 1	EX 1	EX 1
TRAFFIC SIGNAL CBL (TY A)(7 CONDR)(12 AWG)									
TRAFFIC SIGNAL CBL (TY C)(2 CONDR)(12 AWG)	2490		6	6	6				
FIBER OPTIC CABLE (SINGLE MODE) (72 FIBERS)	2705	1	1			1	1	1	1
FIBER OPTIC CABLE (SINGLE MODE) (DROP CABLE)						EX 1	EX 1	EX 1	EX 1
PREPARATION OF EXISTING CONDUIT	1920					1	1	1	1

EX= EXISTING

STATE OF TEXAS
DANNY MAGEE
83653
REGISTERED PROFESSIONAL ENGINEER

The seal appearing on this document was authorized by DANNY MAGEE PE 83653, on MAY 1, 2003.

©2002 Texas Department of Transportation

IH 35
LOOP 20 TO UNIROYAL ROAD

TRAFFIC MANAGEMENT STA 263+00 TO STA 287+00

SHEET 5 OF 12

FED RD DIV NO	FEDERAL AID PROJECT NO		SHEET NO
6	NH-2002 (79)		714
STATE	STATE DIST		COUNTY
TEXAS	LAREDO		WEBB
CONT	SECT	JOB	HIGHWAY NO
0018	05	062, ETC	IH 35

REF FILE(S): j0llop01.bdr, bdr LV ON : 17,46,57,58,60-62
j0llop01.nlg, nlg LV ON : 1-6,35-39
j0llop01.bck, bck LV ON : 2,9,10,14,17,21,25,28
j0llop02.cap, cap LV ON : 1-11,13-17,19-63
milenint.row, row LV ON : 1-22,24-63
j0llop01.xti, xti LV ON : 1-63
2003/ITS/PROJECT/WEB/0018-05-062IH35WIDEN/IH35WIDENCAD; FILE NAME: B6OLOP05.DGN
b60lop05.dgn-02 HOUFIL F023 \hcivil\cf0130\ $DATE$

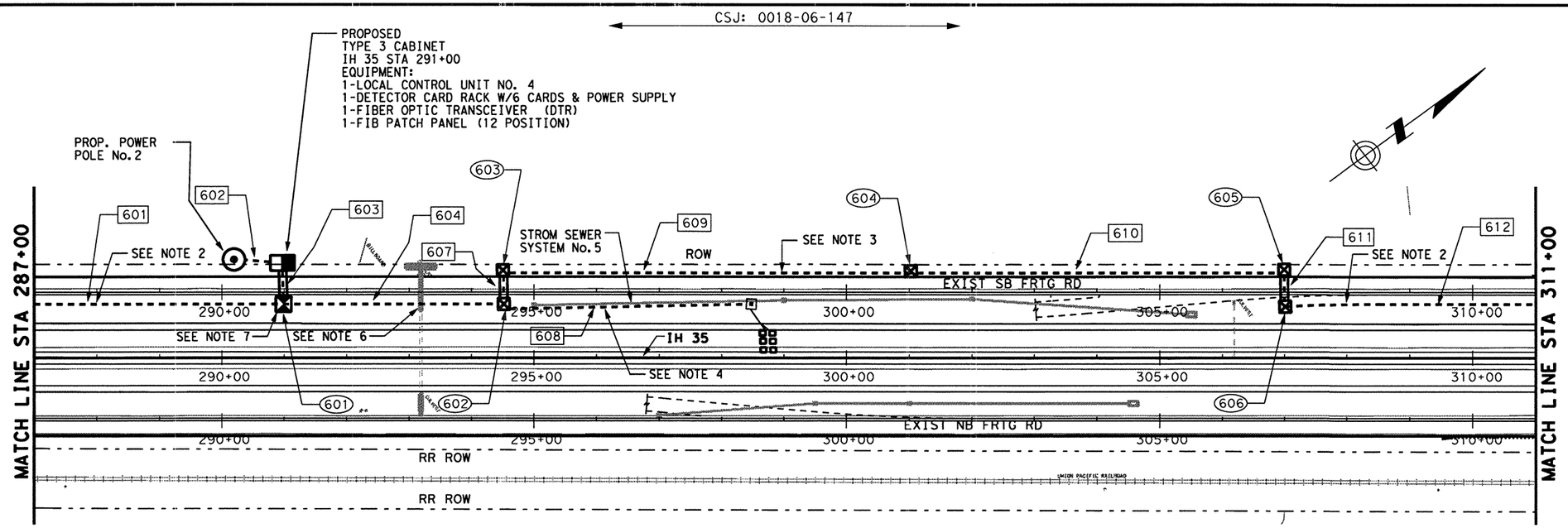

NOTE:

1. ALL BORES UNDER MAINLANES AND FRONTAGE ROAD ~~SHALL BE~~ ENCASED IN STEEL.

2. PROPOSED CONDUITS ~~SHALL BE~~ INSTALLED AT 15' OFFSET FROM SB FRONTAGE ROAD EDGE OF PAVEMENT.

3. RUNS 609 AND 610 ~~SHALL BE~~ INSTALLED AT 5' OFFSET FROM BACK OF CURB.

4. RUN 608 ~~SHALL~~ INSTALLED AT 5' OFFSET FROM STORM SEWER SYSTEM No. 5.

6. THE PROPOSED CONDUITS ~~SHALL BE~~ INSTALLED UNDER CULVERT "F" . REFER TO CULVERT "F" EXTENSION SHEET. THIS CONDUIT ~~SHALL BE~~ INSTALLED PRIOR TO CULVERT INSTALLATION SEE "TMC DETAILS-CONDUIT PLACEMENT."

7. INSTALL 1-72 FIBER OPTIC SPLICE ENCLOSURE.

EQUIPMENT SUMMARY (THIS SHEET)		QUANTITIES
DESCRIPTION	UNIT	0018-06-147
LOOP DETECTOR	EA	6
ELECTRICAL SERVICE POWER POLE	EA	1
FIB PATCH PANEL (12 POSITION)	EA	1
SPLICE ENCLOSURE	EA	1

EQUIPMENT SUMMARY (THIS SHEET)		QUANTITIES
DESCRIPTION	UNIT	0018-06-147
GROUND BOX TY 1	EA	5
GROUND BOX TY 2	EA	1
GROUND BOX TY C	EA	1
TYPE 3 CABINET	EA	1
LOCAL CONTROL UNIT	EA	1
DETECTOR CARD RACK	EA	1
DETECTOR CARD UNIT	EA	6
POWER SUPPLY	EA	1
FIBER OPTIC TRANSCEIVER (DTR)	EA	1

CONDUIT AND CABLE SUMMARY (THIS SHEET)

DESCRIPTION	RUN NO.	601	602	603	604	605	606	607	608	609	610	611	612						
	RUN LENGTH	400	80	60	352			55	395	652	597	60	400						
	0018-06-147																		
CONDUIT (RM) (2")																			
2" (PVC)(SCHD 80)	1307	1	2		1				1										
2" (PVC)(SCHD 80) BORE	120			2															
3" (PVC)(SCHD 80)																			
3" (PVC)(SCHD 80) BORE	290			1				2				2							
4" (PVC)(SCHD 80)																			
4" (PVC)(SCHD 80) BORE	60			1															
MULTIDUCT CONDUIT (PVC) (4IN) (4 WAY)	2401	1			1					1	1		1						
MULTIDUCT CONDUIT (PVC) (4IN) (4 WAY) BORE	115							1				1							
ELEC CONDR (NO. 8) INSULATED																			
ELEC CONDR (NO. 6) INSULATED	240		3																
COMM CABLE (6 PAIR)(22 AWG)																			
TRAFFIC SIGNAL CBL (TY A)(7 CONDR)(12 AWG)																			
TRAFFIC SIGNAL CBL (TY C)(2 CONDR)(12 AWG)	7602	6		12	6				6										
FIBER OPTIC CABLE (SINGLE MODE) (72 FIBERS)	2816	1			1			1		1	1	1	1						
FIBER OPTIC CABLE (SINGLE MODE) (DROP CABLE)	100			1															

LEGEND

- EXISTING GROUND BOX
- EXISTING CONDUIT
- EXISTING DMS CONTROLLER
- EXISTING DMS SIGN CANTI
- EXISTING DMS SIGN"T"MOUN
- EXISTING POWER POLE
- EXISTING TYPE 3 CABINET
- EXISTING LCS
- EXISTING CONDUIT (BORE)
- EXISTING HUB BUILDING
- EXISTING CCTV
- PROP GROUND BOX, TY 1
- PROP GROUND BOX, TY 2
- PROP LCS'S
- PROP CCTV
- PROP CONDUIT, TRENCH
- PROP CONDUIT, BORE
- PROP GROUND BOX, TY C
- PROP LOOP DETECTOR
- PROP DMS SIGN, T-MOUNT
- PROP DMS CONTROLLER
- PROP POWER POLE
- PROP TYPE 3 CABINET
- PROP HUB BUILDING
- XXX RUN NUMBER
- XXX GROUND BOX NUMBER

0 100 200
SCALE: 1" = 200'

STATE OF TEXAS
DANNY MAGEE
83653
REGISTERED PROFESSIONAL ENGINEER

The seal appearing on this document was authorized by DANNY MAGEE PE 83653, on MAY 1, 2003.

©2002 Texas Department of Transportation

IH 35
LOOP 20 TO UNIROYAL ROAD

TRAFFIC MANAGEMENT STA 287+00 TO STA 311+00

SHEET 6 OF 12

FED RD DIV NO	FEDERAL AID PROJECT NO		SHEET NO
6	NH-2002 (79)		715
STATE	STATE DIST		COUNTY
TEXAS	LAREDO		WEBB
CONT	SECT	JOB	HIGHWAY NO
0018	05	062, ETC	IH 35

REF FILE(S): jollop01.bdr, bdr LV ON = 17,46,57,58,60-62
jollop01.alg, alg LV ON = 1-6,35-39
jollop01.bek, bek LV ON = 2,9,10,14,17,21,25,28
jollop02.sep, sep LV ON = 1-11,13-17,19-63
milelnk1.row, row LV ON = 1-22,24-63
jollop01.xtl, xtl LV ON = 1-63
2003/ITS/PROJECT/WEB/0018-05-062IH35WIDEN/IH35WIDENCAD; FILE NAME: B60LOP06.DGN
b60lop06.dgn-02 HOUFIIF023 \hcivil\cxf0130\ $DATE$

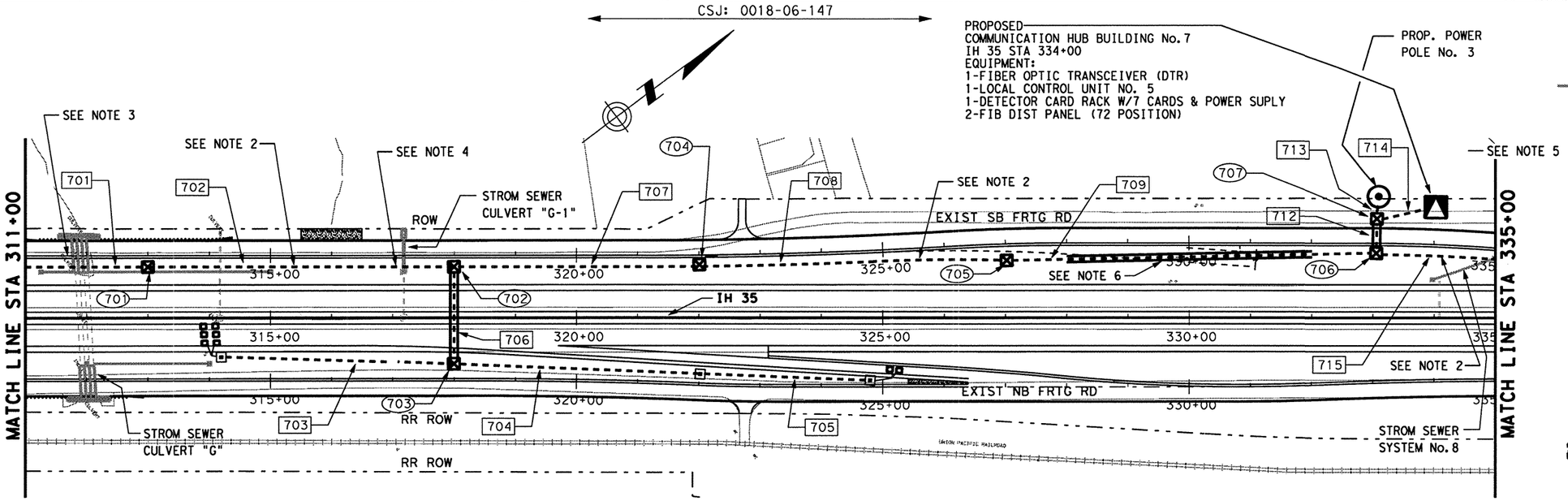

LEGEND

- EXISTING GROUND BOX
- EXISTING CONDUIT
- EXISTING DMS CONTROLLER
- EXISTING DMS SIGN CANTI
- EXISTING DMS SIGN"T"MOUN
- EXISTING POWER POLE
- EXISTING TYPE 3 CABINET
- EXISTING LCS
- EXISTING CONDUIT (BORE)
- EXISTING HUB BUILDING
- EXISTING CCTV
- PROP GROUND BOX, TY 1
- PROP GROUND BOX, TY 2
- PROP LCS'S
- PROP CCTV
- PROP CONDUIT, TRENCH
- PROP CONDUIT, BORE
- PROP GROUND BOX, TY C
- PROP LOOP DETECTOR
- PROP DMS SIGN, T-MOUNT
- PROP DMS CONTROLLER
- PROP POWER POLE
- PROP TYPE 3 CABINET
- PROP HUB BUILDING
- XXX RUN NUMBER
- (XXX) GROUND BOX NUMBER

0 100 200
SCALE: 1" = 200'

NOTE:

1. ALL BORES UNDER MAIN LANES AND FRONTAGE ROADS ~~SHALL BE~~ ENCASED IN STEEL.

2. PROPOSED CONDUITS ~~SHALL BE~~ INSTALLED AT 15' OFFSET FROM SB FRONTAGE ROAD EDGE OF PAVEMENT.

3. THE PROPOSED CONDUITS ~~SHALL BE~~ INSTALLED UNDER CULVERT "G" . REFER TO BRIDGE CLASS CULVERT "G" EXTENSION SHEET. THIS CONDUIT ~~SHALL BE~~ INSTALLED PRIOR TO CULVERT INSTALLATION. SEE "TMC DETAILS-CONDUIT PLACEMENT."

4. PROPOSED CONDUITS ~~SHALL BE~~ INSTALLED UNDER THE CULVERT "G-1." REFER TO CULVERT "G-1" EXTENSION SHEET. THIS CONDUIT ~~SHALL BE~~ INSTALLED PRIOR TO CULVERT INSTALLATION. SEE "TMC DETAILS-CONDUIT PLACEMENT."

5. PROPOSED CONDUITS ~~SHALL BE~~ INSTALLED UNDER THE STORM SEWER SYSTEM NO.8. REFER TO STORM SEWER PLAN AND PROFILE SB FRONTAGE ROAD SHEETS. THIS CONDUIT ~~SHALL BE~~ INSTALLED PRIOR TO STORM SEWER INSTALLATION. SEE "TMC DETAILS-CONDUIT PLACEMENT."

6. THE CONTRACTOR ~~SHALL~~ INSTALL 400' STEEL ENCASED CONDUIT FOR FUTURE RAMP. THIS WORK WILL NOT BE PAID FOR DIRECTLY BUT ~~SHALL BE~~ SUBSIDIARY TO ITEM 618. ACTUAL LOCATION ~~SHALL BE~~ FIELD VERIFIED BY THE ENGINEER.

EQUIPMENT SUMMARY (THIS SHEET)		QUANTITIES
DESCRIPTION	UNIT	0018-06-147
GROUND BOX TY 1	EA	7
GROUND BOX TY C	EA	3
HUB BUILDING	EA	1
LOCAL CONTROL UNIT	EA	1
DETECTOR CARD RACK	EA	1
DETECTOR CARD UNIT	EA	7
POWER SUPPLY	EA	1

EQUIPMENT SUMMARY (THIS SHEET)		QUANTITIES
DESCRIPTION	UNIT	0018-06-147
FIBER OPTIC TRANSCEIVER (DTR)	EA	1
LOOP DETECTOR	EA	8
ELECTRICAL SERVICE POWER POLE	EA	1
FIB DIS PANEL (72 POSITION)	EA	2

CONDUIT AND CABLE SUMMARY (THIS SHEET)

DESCRIPTION	RUN NO.	701	702	703	704	705	706	707	708	709	710	711	712	713	714	715			
	RUN LENGTH	200	500	380	403	278	163	401	500	605			58	33	98	195			
	0018-06-147																		
CONDUIT (RM) (2")																			
2" (PVC)(SCHD 80)	2828			1	1	1		1	1	1				2		1			
2" (PVC)(SCHD 80) BORE																			
3" (PVC)(SCHD 80)																			
3" (PVC)(SCHD 80) BORE	442						2						2						
4" (PVC)(SCHD 80)																			
4" (PVC)(SCHD 80) BORE																			
MULTIDUCT CONDUIT (PVC) (4IN) (4 WAY)	2401	1	1					1	1	1						1			
MULTIDUCT CONDUIT (PVC) (4IN) (4 WAY) BORE	221						1						1						
ELEC CONDR (NO. 8) INSULATED																			
ELEC CONDR (NO. 6) INSULATED	524													4	4				
COMM CABLE (6 PAIR)(22 AWG)																			
TRAFFIC SIGNAL CBL (TY A)(7 CONDR)(12 AWG)																			
TRAFFIC SIGNAL CBL (TY C)(2 CONDR)(12 AWG)	20348			6	2	2	8	8	8	8			14		14	6			
FIBER OPTIC CABLE (SINGLE MODE) (72 FIBERS)	3163	1	1					1	1	1			2		2	1			
FIBER OPTIC CABLE (SINGLE MODE) (DROP CABLE)																			

STATE OF TEXAS
DANNY MAGEE
83653
REGISTERED PROFESSIONAL ENGINEER

The seal appearing on this document was authorized by DANNY MAGEE PE 83653, on MAY 1, 2003.

©2002 Texas Department of Transportation

IH 35
LOOP 20 TO UNIROYAL ROAD

TRAFFIC MANAGEMENT
STA 311+00 TO STA 335+00

SHEET 7 OF 12

FED RD DIV NO	FEDERAL AID PROJECT NO	SHEET NO
6	NH-2002 (79)	716
STATE	STATE DIST	COUNTY
TEXAS	LAREDO	WEBB
CONT / SECT	JOB	HIGHWAY NO
0018 / 05	062, ETC	IH 35

REF FILE(S): j0llop01.bdr, j0llop01.dig, j0llop01.bek, j0llop02.eop, j0llint.row, j0llint.nti
LV ON : 12,46,57,58,60-62
LV ON : 1-4,35-39
LV ON : 2,9,10,14,17,21,25,28
LV ON : 1-11,13-17,19-63
LV ON : 1-23,24-63
LV ON : 1-63
b60lop07.dgn-02 HOUFILE023 \hcivil\cf0130\ $DATE$
2003/ITS/PROJECT/WEB/0018-05-062IH35WIDEN/IH35WIDENCAD; FILE NAME:B60LOP07

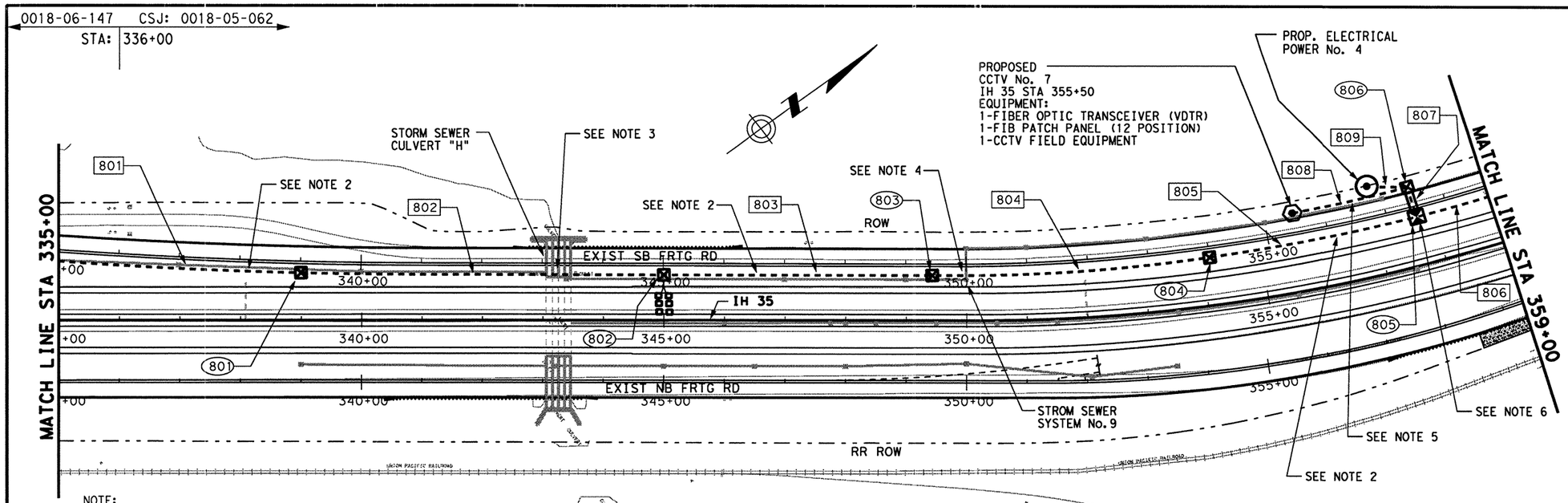

NOTE:

1. ALL BORES UNDER MAINLANES AND FRONTAGE ROADS ~~SHALL BE~~ ENCASED IN STEEL.

2. PROPOSED CONDUITS ~~SHALL BE~~ INSTALLED AT 15' OFFSET FROM SB FRONTAGE ROAD EDGE OF PAVEMENT.

3. PROPOSED CONDUIT ~~SHALL BE~~ INSTALLED UNDER CULVERT "H". REFER TO BRIDGE CLASS CULVERT H EXTENSION BRIDGE LAYOUT SHEET. THIS CONDUIT ~~SHALL BE~~ INSTALLED PRIOR TO CULVERT INSTALLATION. SEE "TMC DETAILS-CONDUIT PLACEMENT."

4. PROPOSED CONDUITS ~~SHALL BE~~ INSTALLED UNDER STORM SEWER SYSTEM No. 9. REFER TO STORM SEWER PLAN AND PROFILE SB FRONTAGE ROAD SHEETS. THIS CONDUIT ~~SHALL BE~~ INSTALLED PRIOR TO STORM SEWER INSTALLATION. SEE "TMC DETAILS-CONDUIT PLACEMENT."

5. RUN 808 ~~SHALL BE~~ INSTALLED AT 8' OFFSET FROM BACK OF CURB.

6. INSTALL 1-72 FIBER OPTIC SPLICE ENCLOSURE.

EQUIPMENT SUMMARY (THIS SHEET)		QUANTITIES	
DESCRIPTION	UNIT	0018-06-147	0018-05-062
GROUND BOX TY 1	EA		5
GROUND BOX TY 2	EA		1
CCTV FIELD EQUIPMENT	EA		1
CCTV FOUNDATION (36")	LF		10
FIBER OPTIC TRANSCEIVER (VDTR)	EA		1
LOOP DETECTOR	EA		6
ELECTRICAL SERVICE POWER POLE	EA		1
SPLICE ENCLOSURE	EA		1
FIB PATCH PANEL (12 POSITION)	EA		1
CAMERA POLE STRUCTURE W/CABINET	EA		1

LEGEND

- EXISTING GROUND BOX
- EXISTING CONDUIT
- EXISTING DMS CONTROLLER
- EXISTING DMS SIGN CANTI
- EXISTING DMS SIGN"T"MOUN
- EXISTING POWER POLE
- EXISTING TYPE 3 CABINET
- EXISTING LCS
- EXISTING CONDUIT (BORE)
- EXISTING HUB BUILDING
- EXISTING CCTV
- PROP GROUND BOX, TY 1
- PROP GROUND BOX, TY 2
- PROP LCS'S
- PROP CCTV
- PROP CONDUIT, TRENCH
- PROP CONDUIT, BORE
- PROP GROUND BOX, TY C
- PROP LOOP DETECTOR
- PROP DMS SIGN, T-MOUNT
- PROP DMS CONTROLLER
- PROP POWER POLE
- PROP TYPE 3 CABINET
- PROP HUB BUILDING
- XXX RUN NUMBER
- XXX GROUND BOX NUMBER

0 100 200
SCALE: 1" = 200'

CONDUIT AND CABLE SUMMARY (THIS SHEET)																				
DESCRIPTION	RUN NO.		801	802	803	804	805	806	807	808	809									
	RUN LENGTH		400	600	443	459	350	124	53	195	67									
	0018-06-147	0018-05-062																		
CONDUIT (RM) (2")																				
2" (PVC)(SCHD 80)	100	1424	1	1						2	2									
2" (PVC)(SCHD 80) BORE																				
3" (PVC)(SCHD 80)																				
3" (PVC)(SCHD 80) BORE		106							2											
4" (PVC)(SCHD 80)																				
4" (PVC)(SCHD 80) BORE																				
MULTIDUCT CONDUIT (PVC) (4IN) (4 WAY)	100	2276	1	1	1	1	1	1												
MULTIDUCT CONDUIT (PVC) (4IN) (4 WAY) BORE		53							1											
ELEC CONDR (NO. 8) INSULATED																				
ELEC CONDR (NO. 6) INSULATED		786								3	3									
COMM CABLE (6 PAIR)(22 AWG)																				
TRAFFIC SIGNAL CBL (TY A)(7 CONDR)(12 AWG)																				
TRAFFIC SIGNAL CBL (TY C)(2 CONDR)(12 AWG)	600	5400	6	6																
FIBER OPTIC CABLE (SINGLE MODE) (72 FIBERS)	100	2536	1	1	1	1	1	1												
FIBER OPTIC CABLE (SINGLE MODE) (DROP CABLE)		298							1	1										

STATE OF TEXAS
DANNY MAGEE
83653
REGISTERED PROFESSIONAL ENGINEER

The seal appearing on this document was authorized by DANNY MAGEE PE 83653, on MAY 1, 2003.

©2002 Texas Department of Transportation

IH 35
LOOP 20 TO UNIROYAL ROAD

TRAFFIC MANAGEMENT STA 335+00 TO STA 359+00

SHEET 8 OF 12

FED RD DIV NO	FEDERAL AID PROJECT NO	SHEET NO
6	NH-2002 (79)	717
STATE	STATE DIST	COUNTY
TEXAS	LAREDO	WEBB
CONT / SECT / JOB		HIGHWAY NO
0018 / 05 / 062, ETC		IH 35

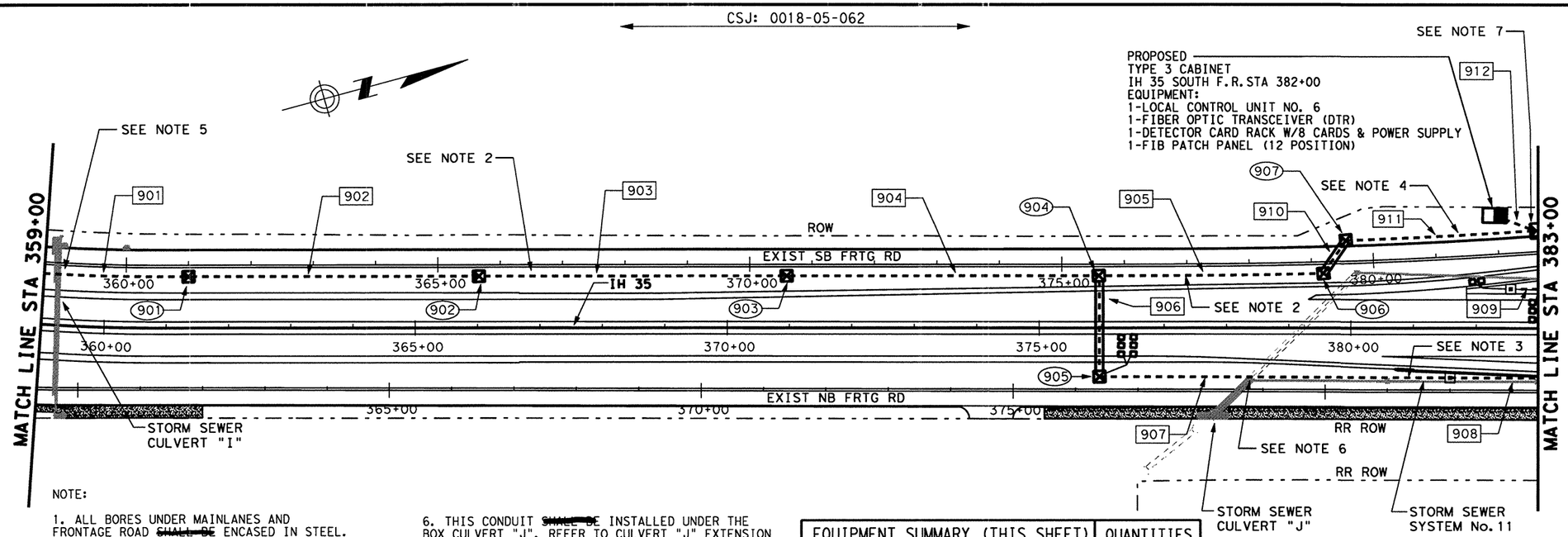

NOTE:

1. ALL BORES UNDER MAINLANES AND FRONTAGE ROAD ~~SHALL BE~~ ENCASED IN STEEL.

2. PROPOSED CONDUITS ~~SHALL BE~~ INSTALLED AT 15' OFFSET FROM SB FRONTAGE ROAD EDGE OF PAVEMENT.

3. RUNS 907 AND 908 ~~SHALL BE~~ INSTALLED AT 6' OFFSET OF STORM SEWER SYSTEM No. 11.

4. RUN 911 ~~SHALL BE~~ INSTALLED AT 8' OFFSET FROM BACK OF CURB.

5. PROPOSED CONDUIT ~~SHALL BE~~ INSTALLED UNDER CULVERT "I". REFER TO CULVERT "I" EXTENSION SHEET. THIS CONDUIT ~~SHALL BE~~ INSTALLED PRIOR TO CULVERT INSTALLATION. SEE "TMC DETAILS-CONDUIT PLACEMENT."

6. THIS CONDUIT ~~SHALL BE~~ INSTALLED UNDER THE BOX CULVERT "J". REFER TO CULVERT "J" EXTENSION SHEET. THIS CONDUIT ~~SHALL BE~~ INSTALLED PRIOR TO CULVERT INSTALLATION. SEE "TMC DETAILS-CONDUIT PLACEMENT."

7. INSTALL 1-72 FIBER OPTIC SPLICE ENCLOSURE.

EQUIPMENT SUMMARY (THIS SHEET)		QUANTITIES
DESCRIPTION	UNIT	0018-05-062
GROUND BOX TY1	EA	7
GROUND BOX TY C	EA	2
TYPE 3 CABINET	EA	1
LOCAL CONTROL UNIT	EA	1
DETECTOR CARD RACK	EA	1
DETECTOR CARD UNIT	EA	8
POWER SUPPLY	EA	1
FIBER OPTIC TRANSCEIVER (DTR)	EA	1
FIB PATCH PANEL (12 POSITION)	EA	1
SPLICE ENCLOSURE	EA	1
LOOP DETECTOR	EA	11

LEGEND

- EXISTING GROUND BOX
- EXISTING CONDUIT
- EXISTING DMS CONTROLLER
- EXISTING DMS SIGN CANTI
- EXISTING DMS SIGN"T"MOUN
- EXISTING POWER POLE
- EXISTING TYPE 3 CABINET
- EXISTING LCS
- EXISTING CONDUIT (BORE)
- EXISTING HUB BUILDING
- EXISTING CCTV
- PROP GROUND BOX, TY 1
- PROP GROUND BOX, TY 2
- PROP LCS'S
- PROP CCTV
- PROP CONDUIT, TRENCH
- PROP CONDUIT, BORE
- PROP GROUND BOX, TY C
- PROP LOOP DETECTOR
- PROP DMS SIGN, T-MOUNT
- PROP DMS CONTROLLER
- PROP POWER POLE
- PROP TYPE 3 CABINET
- PROP HUB BUILDING
- XXX RUN NUMBER
- XXX GROUND BOX NUMBER

0 100 200
SCALE: 1" = 200'

CONDUIT AND CABLE SUMMARY (THIS SHEET)													
DESCRIPTION	RUN NO.	901	902	903	904	905	906	907	908	909	910	911	912
	RUN LENGTH	232	467	494	500	360	165	562	140	45	65	308	73
	0018-05-062												
CONDUIT (RM) (2")													
2" (PVC)(SCHD 80)	1561					1		1	1	1		1	2
2" (PVC)(SCHD 80) BORE													
3" (PVC)(SCHD 80)	73												1
3" (PVC)(SCHD 80) BORE	460						2				2		
4" (PVC)(SCHD 80)	73												1
4" (PVC)(SCHD 80) BORE													
MULTIDUCT CONDUIT (PVC) (4IN) (4 WAY)	2361	1	1	1	1	1						1	
MULTIDUCT CONDUIT (PVC) (4IN) (4 WAY) BORE	230						1				1		
ELEC CONDR (NO. 8) INSULATED													
ELEC CONDR (NO. 6) INSULATED	219												3
COMM CABLE (6 PAIR)(22 AWG)													
TRAFFIC SIGNAL CBL (TY A)(7 CONDR)(12 AWG)													
TRAFFIC SIGNAL CBL (TY C)(2 CONDR)(12 AWG)	10116					8	8	2	2	8	8	8	16
FIBER OPTIC CABLE (SINGLE MODE) (72 FIBERS)	2726	1	1	1	1	1					1	1	
FIBER OPTIC CABLE (SINGLE MODE) (DROP CABLE)	98												1

STATE OF TEXAS
DANNY MAGEE
83653
REGISTERED PROFESSIONAL ENGINEER

The seal appearing on this document was authorized by DANNY MAGEE PE 83653, on MAY 1, 2003.

©2002 Texas Department of Transportation

IH 35
LOOP 20 TO UNIROYAL ROAD

TRAFFIC MANAGEMENT STA 359+00 TO STA 383+00

SHEET 9 OF 12

FED RD DIV NO	FEDERAL AID PROJECT NO		SHEET NO
6	NH-2002 (79)		718
STATE	STATE DIST		COUNTY
TEXAS	LAREDO		WEBB
CONT	SECT	JOB	HIGHWAY NO
0018	05	062, ETC	IH 35

2003/ITS/PROJECT/WEB/0018-05-062IH35WIDEN/IH35WIDENCAD; FILE NAME: B60LOP09.DGN

b60lop09.dgn-02 HOUFIIF023 \hcivil\cf0130\ $DATE$

REF FILE(S): j0llop01.bdr, j0llop01.bdr LV ON = 17,46,57,58,60-62
j0llop01.ntl, ntl LV ON = 1-63
milehlt.row ,row LV ON = 1-22,24-63
j0llop02.cop, cop LV ON = 1-11,13-17,19-63
j0llop01.bck, bck LV ON = 2,9,10,14,17,21,25,28

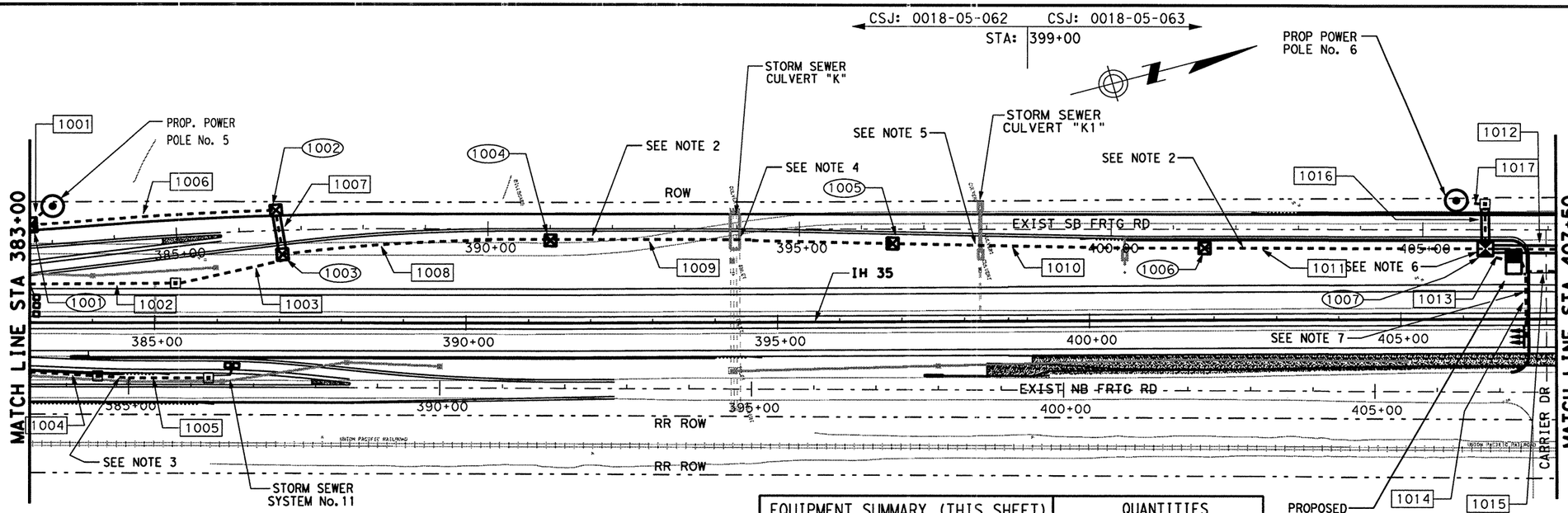

PROPOSED TYPE 3 CABINET
IH 35 STA 406+75
EQUIPMENT:
2-LOCAL CONTROL UNIT NO. 7 & 8
2-FIBER OPTIC TRANSCEIVER (DTR)
1-FIB PATCH PANEL (12 POSITION)
~~1-8x1 VIDEO F/O MULTIPLEXER W/DATA~~
1- Field Hardened Ethernet Switch
1- RS232 Port Server
1- 8-Port Server

CO#90

LEGEND

- EXISTING GROUND BOX
- EXISTING CONDUIT
- EXISTING DMS CONTROLLER
- EXISTING DMS SIGN CANTI
- EXISTING DMS SIGN"T"MOUN
- EXISTING POWER POLE
- EXISTING TYPE 3 CABINET
- EXISTING LCS
- EXISTING CONDUIT (BORE)
- EXISTING HUB BUILDING
- EXISTING CCTV
- PROP GROUND BOX, TY 1
- PROP GROUND BOX, TY 2
- PROP LCS'S
- PROP CCTV
- PROP CONDUIT, TRENCH
- PROP CONDUIT, BORE
- PROP GROUND BOX, TY C
- PROP LOOP DETECTOR
- PROP DMS SIGN, T-MOUNT
- PROP DMS CONTROLLER
- PROP POWER POLE
- PROP TYPE 3 CABINET
- PROP HUB BUILDING
- XXX RUN NUMBER
- (XXX) GROUND BOX NUMBER

0 100 200
SCALE: 1" = 200'

NOTE:

1. ALL BORES UNDER MAINLANES AND FRONTAGE ROADS ~~SHALL BE~~ ENCASED IN STEEL.

2. PROPOSED CONDUITS ~~SHALL BE~~ INSTALLED AT 15' OFFSET FROM SB FRONTAGE ROAD EDGE OF PAVEMENT.

3. RUNS 1004 AND 1005 ~~SHALL BE~~ INSTALLED AT 6' OFFSET FROM THE STORM SEWER No. 11.

4. PROPOSED CONDUITS ~~SHALL~~ BE INSTALLED UNDER CULVERT "K". REFER TO CULVERT "K" EXTENSION SHEET. THIS CONDUIT ~~SHALL BE~~ INSTALLED PRIOR TO CULVERT INSTALLATION. SEE "TMC DETAILS-CONDUIT PLACEMENT."

5. PROPOSED CONDUITS ~~SHALL BE~~ INSTALLED UNDER CULVERT "K1". REFER TO CULVERT "K1" EXTENSION SHEET. THIS CONDUIT ~~SHALL BE~~ INSTALLED PRIOR TO CULVERT INSTALLATION. SEE "TMC DETAIL-CONDUIT PLACEMENT."

6. INSTALL 1-72 FIBER OPTIC SPLICE ENCLOSURE.

7. RUN 1014 ~~SHALL~~ BEGIN IN THE TYPE 3 CABINET AND ~~SHALL BE~~ ATTACHED TO STRUCTURE WITH RMC AS SHOWN ON "ITS RMC GENERAL DETAILS."

EQUIPMENT SUMMARY (THIS SHEET)		QUANTITIES	
DESCRIPTION	UNIT	0018-05-062	0018-05-063
GROUND BOX TY 1	EA	5	1
GROUND BOX TY 2	EA		1
GROUND BOX TY C	EA	3	1
TYPE 3 CABINET	EA		1
LOCAL CONTROL UNIT	EA		2
FIBER OPTIC TRANSCEIVER (DTR)	EA		2
LOOP DETECTOR	EA	5	
ELECTRICAL SERVICE POWER POLE	EA	1	1
LANE CONTROL SIGNALS	EA		3
FIB PATCH PANEL (12 POSITION)	EA		1
SPLICE ENCLOSURE	EA		1
~~8x1 VIDEO F/O MULTIPLEXER W/DATA~~	~~EA~~		~~1~~

CO#90

CONDUIT AND CABLE SUMMARY (THIS SHEET)																				
DESCRIPTION	RUN NO.		1001	1002	1003	1004	1005	1006	1007	1008	1009	1010	1011	1012	1013	1014	1015	1016	1017	
	RUN LENGTH		50	235	178	110	178	397	74	431	550	500	450	113	50	152	95	75	46	
	0018-05-062	0018-05-163																		
CONDUIT (RM) (2")		247														1	1			
2" (PVC)(SCHD 80)	1198	192	2	1	1	1	1	1							2				2	
2" (PVC)(SCHD 80) BORE		150																2		
3" (PVC)(SCHD 80)		50													1					
3" (PVC)(SCHD 80) BORE	148								2											
4" (PVC)(SCHD 80)		50													1					
4" (PVC)(SCHD 80) BORE																				
MULTIDUCT CONDUIT (PVC) (4IN) (4 WAY)	1578	863						1		1	1	1	1	1						
MULTIDUCT CONDUIT (PVC) (4IN) (4 WAY) BORE	74								1											
ELEC CONDR (NO. 8) INSULATED																				
ELEC CONDR (NO. 6) INSULATED	150	513	3												3			3	3	
COMM CABLE (6 PAIR)(22 AWG)																				
TRAFFIC SIGNAL CBL (TY A)(7 CONDR)(12 AWG)		741														3	3			
TRAFFIC SIGNAL CBL (TY C)(2 CONDR)(12 AWG)	7648			8	8	2	2	8	8											
FIBER OPTIC CABLE (SINGLE MODE) (72 FIBERS)	1902	963						1	1	1	1	1	1	1						
FIBER OPTIC CABLE (SINGLE MODE) (DROP CABLE)		100													1					

STATE OF TEXAS
DANNY MAGEE
83653
REGISTERED PROFESSIONAL ENGINEER

The seal appearing on this document was authorized by DANNY MAGEE PE 83653, on MAY 1, 2003.

©2002 Texas Department of Transportation

IH 35
LOOP 20 TO UNIROYAL ROAD

TRAFFIC MANAGEMENT STA 383+00 TO STA 407+50

SHEET 10 OF 12

FED RD DIV NO	FEDERAL AID PROJECT NO	SHEET NO
6	NH-2002 (79)	719
STATE	STATE DIST	COUNTY
TEXAS	LAREDO	WEBB
CONT	SECT / JOB	HIGHWAY NO
0018	05 / 062, ETC	IH 35

REF FILE(S): j0llop01.bdr, j0llop01.bdr LV ON : 17,46,57,58,60-62
j0llop01.nfl, nfl LV ON : 1-63
milelat.row , row LV ON : 1-22,24-63
j0llop02.cap, cap LV ON : 1-11,13-17,19-63
j0llop01.bak, bak LV ON : 2,9,10,14,17,21,25,28
j0llop01.nfg, nfg LV ON : 1-6,35-39
2003/ITS/PROJECT/WEB/0018-05-062IH35WIDEN/IH35WIDENCAD; FILE NAME:B60LOP10.DGN
b60lop10.dgn-01 HOUFTLF023 \hcivil\cf0130\ $DATE$

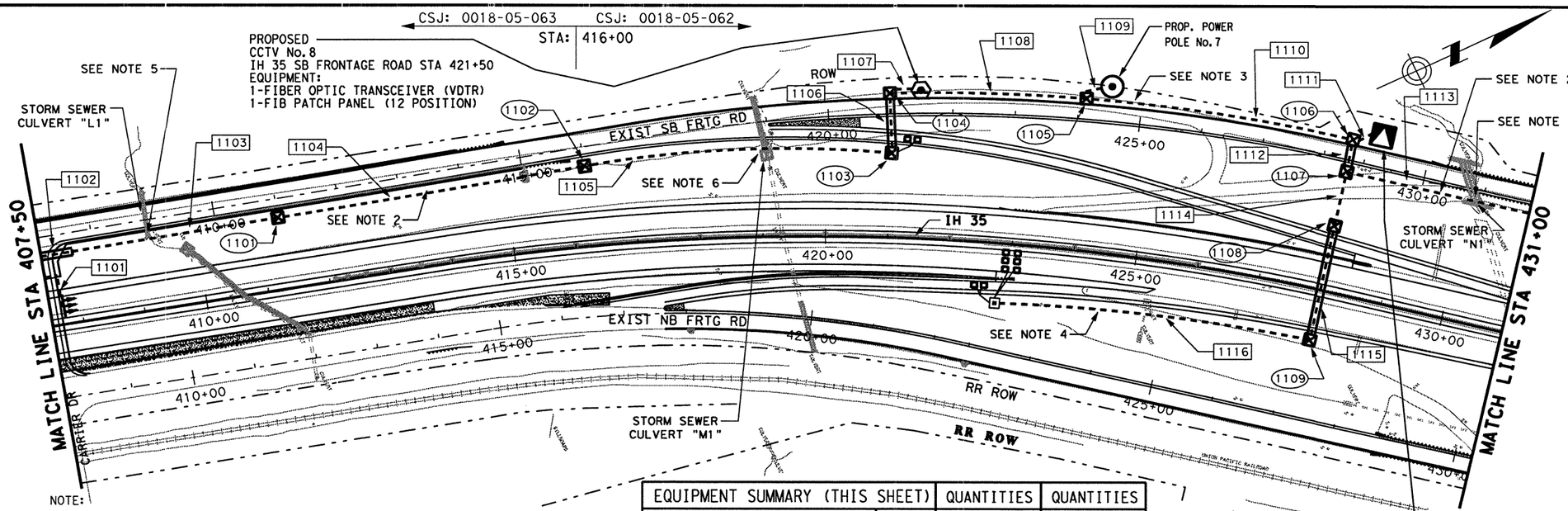

LEGEND

- EXISTING GROUND BOX
- EXISTING CONDUIT
- EXISTING DMS CONTROLLER
- EXISTING DMS SIGN CANTI
- EXISTING DMS SIGN"T"MOUN
- EXISTING POWER POLE
- EXISTING TYPE 3 CABINET
- EXISTING LCS
- EXISTING CONDUIT (BORE)
- EXISTING HUB BUILDING
- EXISTING CCTV
- PROP GROUND BOX, TY 1
- PROP GROUND BOX, TY 2
- PROP LCS'S
- PROP CCTV
- PROP CONDUIT, TRENCH
- PROP CONDUIT, BORE
- PROP GROUND BOX, TY C
- PROP LOOP DETECTOR
- PROP DMS SIGN, T-MOUNT
- PROP DMS CONTROLLER
- PROP POWER POLE
- PROP TYPE 3 CABINET
- PROP HUB BUILDING
- XXX RUN NUMBER
- (XXX) GROUND BOX NUMBER

NOTE:

1. ALL BORES UNDER MAINLANES AND FRONTAGE ROADS ~~SHALL BE~~ ENCASED IN STEEL.

2. PROPOSED CONDUITS ~~SHALL BE~~ INSTALLED AT 15' OFFSET FROM SB FRONTAGE ROAD EDGE PAVEMENT.

3. RUNS 1108 AND 1110 ~~SHALL BE~~ INSTALLED AT 8' OFFSET FROM BACK OF CURB.

4. RUN 1115 ~~SHALL BE~~ INSTALLED AT 15' OFFSET FROM PROPOSED EDGE OF PAVEMENT.

5. PROPOSED CONDUITS ~~SHALL~~ BE INSTALLED UNDER THE CULVERT "L1." REFER TO CULVERT "L1" EXTENSION SHEET. THIS CONDUIT ~~SHALL BE~~ INSTALLED PRIOR TO CULVERT INSTALLATION. SEE "TMC DETAILS-CONDUIT PLACEMENT."

6. PROPOSED CONDUITS ~~SHALL BE~~ INSTALLED UNDER THE CULVERT "M1." REFER TO CULVERT "M1" EXTENSION SHEET. THIS CONDUIT ~~SHALL BE~~ INSTALLED PRIOR TO CULVERT INSTALLATION. SEE "TMC DETAILS-CONDUIT PLACEMENT."

7. PROPOSED CONDUITS ~~SHALL BE~~ INSTALLED UNDER THE CULVERT "N1." REFER TO CULVERT "N1" EXTENSION SHEET. THIS CONDUIT ~~SHALL BE~~ INSTALLED PRIOR TO CULVERT INSTALLATION. SEE "TMC DETAILS-CONDUIT PLACEMENT."

EQUIPMENT SUMMARY (THIS SHEET)		QUANTITIES	QUANTITIES
DESCRIPTION	UNIT	0018-05-063	0018-05-062
GROUND BOX TY 1	EA	1	8
GROUND BOX TY C	EA		1
HUB BUILDING	EA		1
LOCAL CONTROL UNIT	EA		1
DETECTOR CARD RACK	EA		1
DETECTOR CARD UNIT	EA		5
POWER SUPPLY	EA		1
FIBER OPTIC TRANSCEIVER (VDTR)	EA		1
FIBER OPTIC TRANSCEIVER (DTR)	EA		1
LOOP DETECTOR	EA		10
LANE CONTROL SIGNALS	EA	3	
CCTV FIELD EQUIPMENT	EA		1
CCTV FOUNDATION (36")	LF		10
ELECTRICAL SERVICE POWER POLE	EA		1
FIB DIST PANEL (72 POSITION)	EA		2
FIB PATCH PANEL (12 POSITION)	EA		1

PROPOSED
HUB BUILDING No.8
IH 35 STA 428+50
EQUIPMENT:
1-FIBER OPTIC TRANSCEIVER (DTR)
1-LOCAL CONTROL UNIT NO. 9
1-DETECTOR CARD RACK W/5 CARDS & POWER SUPLY
2-FIB DIS PANEL (72 POSITION)

8. RUN 1101 ~~SHALL~~ BEGIN IN THE TYPE 3 CABINET AND ~~SHALL BE~~ ATTACHED TO STRUCTURE WITH RMC AS SHOWN ON "ITS RMC GENERAL DETAILS."

CONDUIT AND CABLE SUMMARY (THIS SHHET)

DESCRIPTION	RUN NO.		1101	1102	1103	1104	1105	1106	1107	1108	1109	1110	1111	1112	1113	1114	1115	1116		
	RUN LENGTH		90	51	335	500	495	99	50	316	47	433	50	54	300	91	99	509		
	0018-05-063	0018-05-062																		
CONDUIT (RM) (2")	90		1																	
2" (PVC)(SCHD 80)		2501							2	2	2	2			1			1		
2" (PVC)(SCHD 80) BORE																				
3" (PVC)(SCHD 80)		482													1	2				
3" (PVC)(SCHD 80) BORE		504						2						2			2			
4" (PVC)(SCHD 80)																				
4" (PVC)(SCHD 80) BORE																				
MULTIDUCT CONDUIT (PVC) (4IN) (4 WAY)	835	1635			1	1	1			1		1			1	1				
MULTIDUCT CONDUIT (PVC) (4IN) (4 WAY) BORE	51	252		1				1						1			1			
ELEC CONDR (NO. 8) INSULATED																				
ELEC CONDR (NO. 6) INSULATED		3359							3	3	7	4	4							
COMM CABLE (6 PAIR)(22 AWG)																				
TRAFFIC SIGNAL CBL (TY A)(7 CONDR)(12 AWG)	270		3																	
TRAFFIC SIGNAL CBL (TY C)(2 CONDR)(12 AWG)		8220						2		2		2	10	8		8	8	8		
FIBER OPTIC CABLE (SINGLE MODE) (72 FIBERS)	936	1843		1	1	1	1	1		1		1	1							
FIBER OPTIC CABLE (SINGLE MODE) (DROP CABLE)		2007							1	1		1	3	2	2					

0 100 200
SCALE: 1" = 200'

STATE OF TEXAS
DANNY MAGEE
83653
REGISTERED PROFESSIONAL ENGINEER

The seal appearing on this document was authorized by DANNY MAGEE PE 83653, on MAY 1, 2003.

©2002 Texas Department of Transportation

IH 35
LOOP 20 TO UNIROYAL ROAD

TRAFFIC MANAGEMENT STA 407+50 TO STA 431+00

SHEET 11 OF 12

FED RD DIV NO	FEDERAL AID PROJECT NO		SHEET NO
6	NH-2002 (79)		720
STATE	STATE DIST		COUNTY
TEXAS	LAREDO		WEBB
CONT	SECT	JOB	HIGHWAY NO
0018	05	062, ETC	IH 35

REF FILE(S): j01lop01.xtl, xtl LV ON = 1-63
j01lop01.bdr, bdr LV ON = 17,46,57,58,60-62
j01lop01.alg, alg LV ON = 1-6,35-39
j01lop02.bck, bck LV ON = 2,9,10,16,17,21,25,28
j01lop02.sep, sep LV ON = 1-11,13-17,19-63
milelnt.row, .row LV ON = 1-22,24-63
HOUFIIF023 \hcivil\cf0130\ $DATE$
b60lop11.dgn-02
2003/ITS/PROJECT/WEB/0018-05-062IH35WIDEN/IH35WIDENCAD; FILE NAME: B60LOP11.DGN

CSJ: 0018-05-062

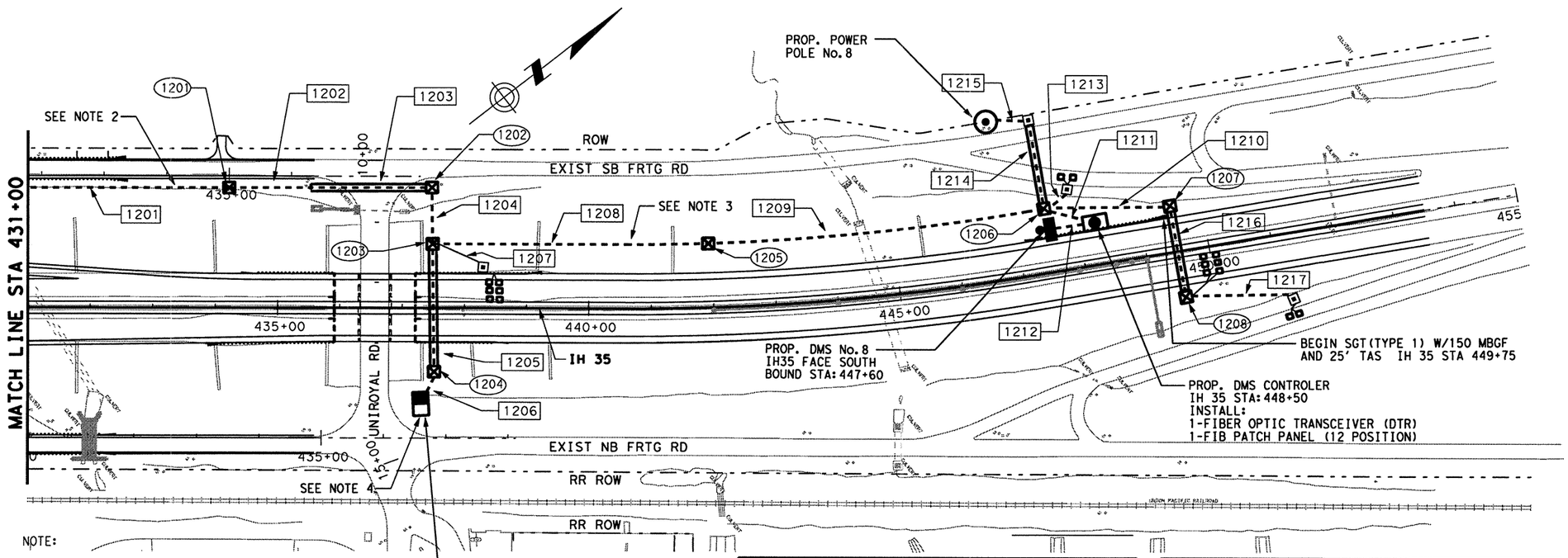

NOTE:

1. ALL BORES UNDER MAINLANES AND FRONTAGE ROADS ~~SHALL BE~~ ENCASED IN STEEL.

2. PROPOSED CONDUITS ~~SHALL BE~~ INSTALLED AT 15' OFFSET FROM SB FRONTAGE ROAD EDGE OF PAVEMENT.

3. RUNS 1208 AND 1209 ~~SHALL BE~~ INSTALLED AT 50' OFFSET FROM PROPOSED EDGE OF PAVEMENT.

4. ELECTRICAL SERVICE FOR THIS TYPE 3 CABINET ~~SHALL BE~~ PROVIDED BY THE TRAFFIC SIGNAL POWER POLE. SEE UNIROYAL RD. TRAFFIC SIGNAL LAYOUT. THIS WORK ~~WILL NOT BE~~ PAID FOR DIRECTLY BUT ~~SHALL BE~~ SUBSIDIARY TO ELECTRICAL SERVICE ITEM.

PROPOSED
TYPE 3 CAB
INSTALL:
1-FIBER OPTIC TRANSCEIVER (DTR)
1-LOCAL CONTROL UNIT No. 10
1-DETECTOR CARD RACK W/8
CARDS & POWER SUPPLY
1 FIB PATCH PANEL (12 POSITION)
~~1-8:1 VIDEO F/O MULTIPLEXER W/DATA~~
1-Field Hardened Ethernet Switch
1-8-Port Video Server
RS 232 Port Server
CO#90

EQUIPMENT SUMMARY (THIS SHEET)		QUANTITIES
DESCRIPTION	UNIT	0018-05-062
GROUND BOX TY 1	EA	8
GROUND BOX TYPE C	EA	3
TYPE 3 CABINET	EA	1
FIBER OPTIC TRANSCEIVER (DTR)	EA	2
LOCAL CONTROL UNIT	EA	1
DETECTOR CARD RACK	EA	1
DETECTOR CARD UNIT	EA	8
POWER SUPPLY	EA	1
LOOP DETECTOR	EA	16

EQUIPMENT SUMMARY (THIS SHEET)		QUANTITIES
DESCRIPTION	UNIT	0018-05-062
DMS SIGN AND CONTROLER	EA	1
DMS FOUNDATION	LF	26
OVHD SIGN SUPPORT	EA	1
ELECTRICAL SERVICE	EA	1
FIB DIST PANEL (12 POSITION)	EA	2
TERM ANCHOR SECTION (12 GA)	EA	1
MTL BM GD FE(12 GA)(TIM POST)	LF	150
SINGLE GA RAIL TERM (TY I)	EA	1
~~8:1 VIDEO F/O MULTIPLEXER W/DATA~~	~~EA~~	~~1~~

CO#90

LEGEND

- EXISTING GROUND BOX
- EXISTING CONDUIT
- EXISTING DMS CONTROLLER
- EXISTING DMS SIGN CANTI
- EXISTING DMS SIGN"T"MOUN
- EXISTING POWER POLE
- EXISTING TYPE 3 CABINET
- EXISTING LCS
- EXISTING CONDUIT (BORE)
- EXISTING HUB BUILDING
- EXISTING CCTV
- PROP GROUND BOX, TY 1
- PROP GROUND BOX, TY 2
- PROP LCS'S
- PROP CCTV
- PROP CONDUIT, TRENCH
- PROP CONDUIT, BORE
- PROP GROUND BOX, TY C
- PROP LOOP DETECTOR
- PROP DMS SIGN, T-MOUNT
- PROP DMS CONTROLLER
- PROP POWER POLE
- PROP TYPE 3 CABINET
- PROP HUB BUILDING
- XXX RUN NUMBER
- (XXX) GROUND BOX NUMBER

0 100 200
SCALE: 1" = 200'

STATE OF TEXAS
DANNY MAGEE
83653
REGISTERED PROFESSIONAL ENGINEER

The seal appearing on this document was authorized by DANNY MAGEE PE 83653, on MAY 1, 2003.

©2002 Texas Department of Transportation

IH 35
LOOP 20 TO UNIROYAL ROAD

TRAFFIC MANAGEMENT
STA 431+00 TO
STA 453+50

SHEET 12 OF 12

FED RD DIV NO	FEDERAL AID PROJECT NO	SHEET NO
6	NH-2002 (79)	721
STATE	STATE DIST	COUNTY
TEXAS	LAREDO	WEBB
CONT	SECT / JOB	HIGHWAY NO
0018	05 / 062, ETC	IH 35

CONDUIT AND CABLE SUMMARY (THIS SHEET)

DESCRIPTION	RUN NO.	1201	1202	1203	1204	1205	1206	1207	1208	1209	1210	1211	1212	1213	1214	1215	1216	1217
	RUN LENGTH	322	132	195	93	212	50	90	443	542	202	109	100	50	145	65	153	173
	0018-05-062																	
CONDUIT (RM) (2")																		
2" (PVC)(SCHD 80)	1943	1			1		2	1	1	1				1		2		1
2" (PVC)(SCHD 80) BORE	290														2			
3" (PVC)(SCHD 80)	2125	1	2		1		1		1	1	1	1	1					
3" (PVC)(SCHD 80) BORE	1120			2		2											2	
4" (PVC)(SCHD 80)	468						1					2	2					
4" (PVC)(SCHD 80) BORE																		
MULTIDUCT CONDUIT (PVC) (4IN) (4 WAY)	1734	1	1		1				1	1	1							
MULTIDUCT CONDUIT (PVC) (4IN) (4 WAY) BORE	560			1		1											1	
ELEC CONDR (NO. 8) INSULATED																		
ELEC CONDR (NO. 6) INSULATED	1276											4			4	4		
COMM CABLE (6 PAIR)(22 AWG)																		
TRAFFIC SIGNAL CBL (TY A)(7 CONDR)(12 AWG)																		
TRAFFIC SIGNAL CBL (TY C)(2 CONDR)(12 AWG)	17868					16	16	6	10	10	8			2			8	2
FIBER OPTIC CABLE (SINGLE MODE) (72 FIBERS)																		
FIBER OPTIC CABLE (SINGLE MODE) (DROP CABLE)	3095	2	2	2	2	1	1		1	1		1						

2003/ITS/PROJECT/WEB/0018-05-062IH35WIDEN/IH35WIDENCAD; FILE NAME: B60LOP12.DGN

b60lop12.dgn-02 HOUFILE023 \hcivil\cf0130\ $DATE$

REF FILE(S): j01lop01.bdr, bdr LV ON : 17,46,57,58,60-62
j01lop01.bat, bat LV ON : 1-63
j01lop01.sti, sti LV ON : 1-63
milelst.row .row LV ON : 1-22,24-63
j01lop02.cap, cap LV ON : 1-11,13-17,19-63
j01lop01.bat, bak LV ON : 2,9,10,14,17,21,25,28

LEGEND:

VDTR	FIBER OPTIC VIDEO/DATA TRANSCEIVER
DTR	FIBER OPTIC DATA TRANSCEIVER
FPP	FIBER PATCH PANEL (12 POSITION)
DMS	DYNAMIC MESSAGE SIGN
EX	EXISTING

1. INSTALL
THE 8:1 DEMUX W/DATA (1 EACH FOR UNIROYAL BLVD. AND CARRIER DR.) ~~SHALL BE~~ LOCATED IN THE EXISTING ENVIRONMENTAL HUB BUILDING AT STA. 130+00. THE DEMUXED VIDEO SIGNALS ~~SHALL BE~~ CONNECTED TO THE EXISTING VIDEO SWITCH AND DATA TO THE EXISTING D/I AT THE SAME LOCATION.

2. CHANNEL ASSIGNMENTS
FOR D/I CHANNEL ASIGNMENTS, SEE T1 CHANNEL ASSIGNMENTS SHEETS.

3. PROPOSED AND SPARE PSDM CARDS
PSDM CARDS SHOWN IN ENVIRONMENTAL HUB BUILDING FOR VIVDS COMMUNICATION ~~WILL NOT BE~~ PAID FOR DIRECTLY ,BUT ~~SHALL BE~~ SUBSIDIARY TO ITEM "8:1 VIDEO F/O MULTIPLEXER WITH DATA". SPECIFICATION FOR PSDM CARD ~~SHALL BE~~ FOUND UNDER DROP/INSERT MUX.

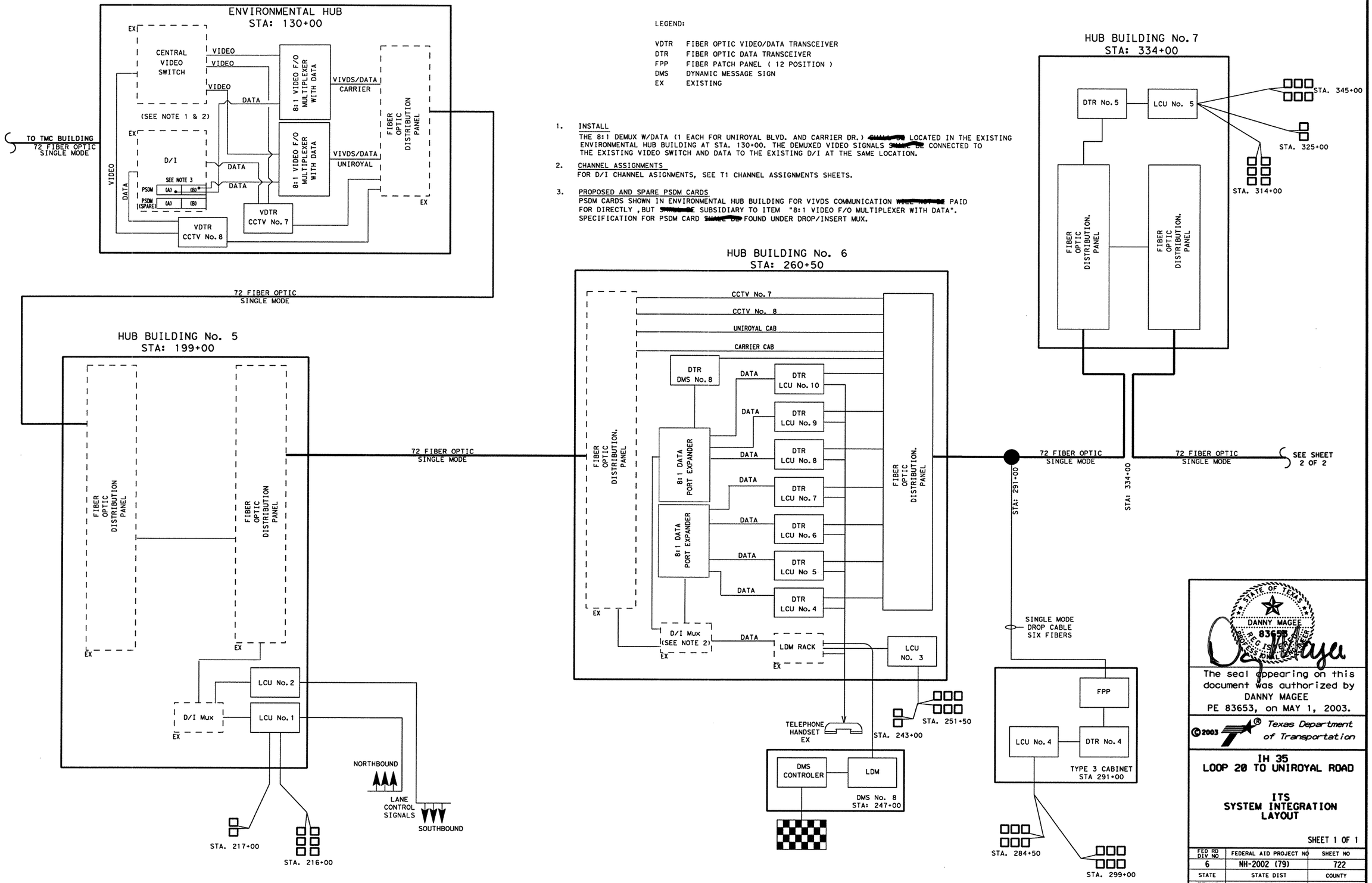

STATE OF TEXAS
DANNY MAGEE
83653
PROFESSIONAL ENGINEER

The seal appearing on this document was authorized by DANNY MAGEE PE 83653, on MAY 1, 2003.

©2003 Texas Department of Transportation

IH 35
LOOP 20 TO UNIROYAL ROAD

ITS SYSTEM INTEGRATION LAYOUT

SHEET 1 OF 1

FED RD DIV NO	FEDERAL AID PROJECT NO		SHEET NO
6	NH-2002 (79)		722
STATE	STATE DIST		COUNTY
TEXAS	LAREDO		WEBB
CONT	SECT	JOB	HIGHWAY NO
0018	05	062, ETC	IH 35

2003/ITS/PROJECT/WEB/0018-05-062IH35WIDEN/IH35WIDENCAD; FILE NAME:B60 INTEGRATION LAYOUT.DGN

1. INSTALL
11-NTSC VIDEO DISTRIBUTION AMPLIFIERS (1 INPUT x 2 OUTPUTS) WITH BNC COAXIAL CONNECTORS. THE UNIT ~~MAY BE~~ POWERED FROM A WALL TRANSFORMER. THE GAIN OF THE AMPLIFIER ~~SHALL BE~~ 1.0 (ONE), WITH A STABILITY FACTOR OF BETTER THAN + OR - .5% OVER THE TEMPERATURE OPERATING RANGE. THIS DEVICE ~~SHALL BE~~ RATED FOR A 0 TO 140 DEG. F. OPERATING TEMPERATURE AND ~~SHALL BE~~ PAID AS INCIDENTAL TO MUX.

2. INSTALL
THE 8:1 DEMUX W/DATA (1 EACH FOR UNIROYAL BLVD. AND CARRIER DR.) ~~SHALL BE~~ LOCATED IN THE EXISTING ENVIRONMENTAL HUB BUILDING AT STA. 130+00. THE DEMUXED VIDEO SIGNALS ~~SHALL BE~~ CONNECTED TO THE EXISTING VIDEO SWITCH AND DATA TO THE EXISTING D/I AT THE SAME LOCATION.

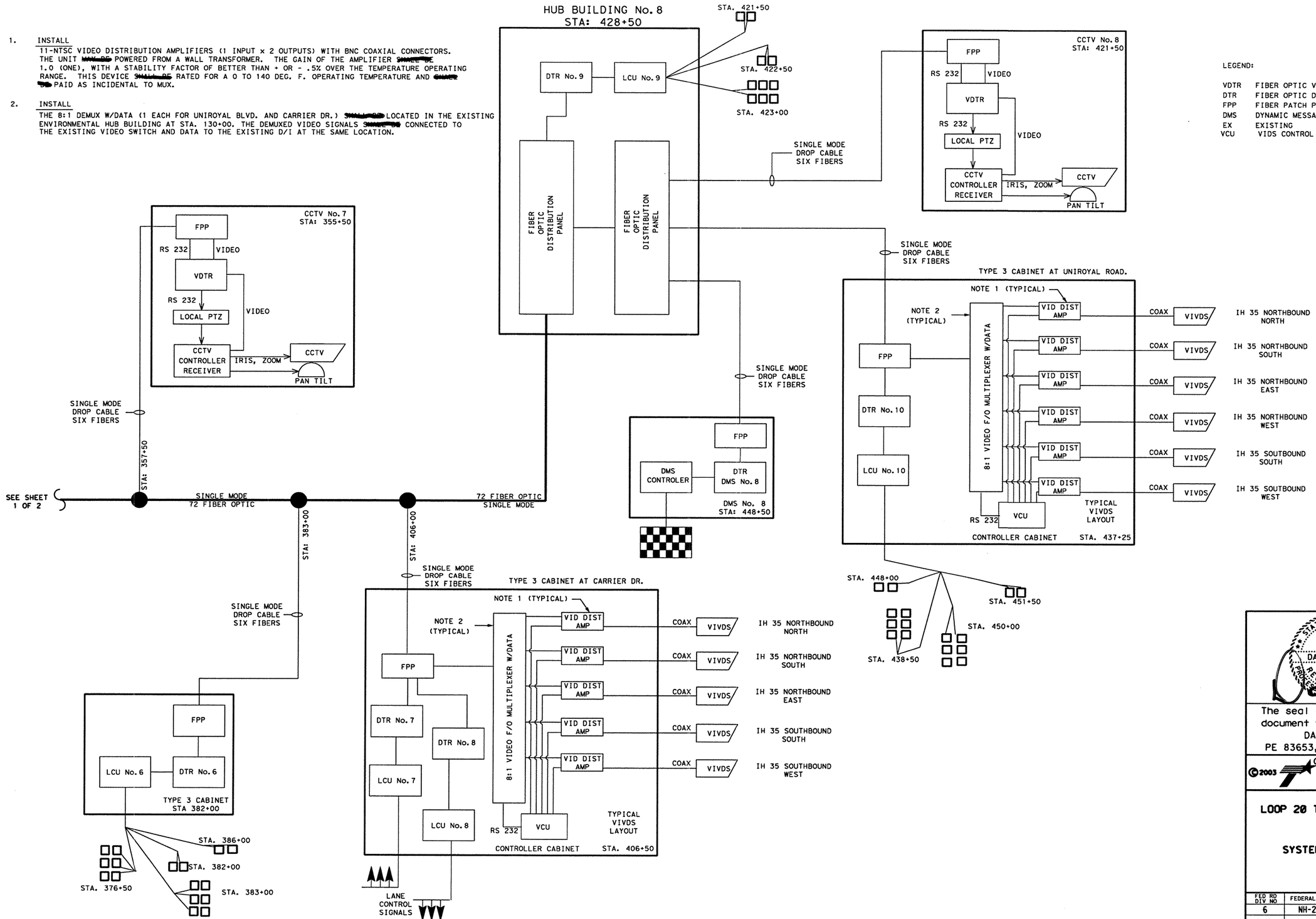

LEGEND:

VDTR	FIBER OPTIC VIDEO/DATA TRANCEIVER
DTR	FIBER OPTIC DATA TRANCEIVER
FPP	FIBER PATCH PANEL (12 POSITION)
DMS	DYNAMIC MESSAGE SIGN
EX	EXISTING
VCU	VIDS CONTROL UNIT

STATE OF TEXAS
DANNY MAGEE
83653
REGISTERED PROFESSIONAL ENGINEER

The seal appearing on this document was authorized by DANNY MAGEE PE 83653, on MAY 1, 2003.

©2003 Texas Department of Transportation

IH 35
LOOP 20 TO UNIROYAL ROAD

ITS
SYSTEM INTEGRATION
LAYOUT

SHEET 2 OF 2

FED RD DIV NO	FEDERAL AID PROJECT NO		SHEET NO
6	NH-2002 (79)		723
STATE	STATE DIST		COUNTY
TEXAS	LAREDO		WEBB
CONT	SECT	JOB	HIGHWAY NO
0018	05	062, ETC	IH 35

2003/ITS/PROJECT/WEB/0018-05-062IH35WIDEN/IH35WIDENCAD; FILE NAME:B60_INTEGRATION LAYOUT.DGN

EXISTING MILO 2 PROJECT
CSJ: 0018-06-131

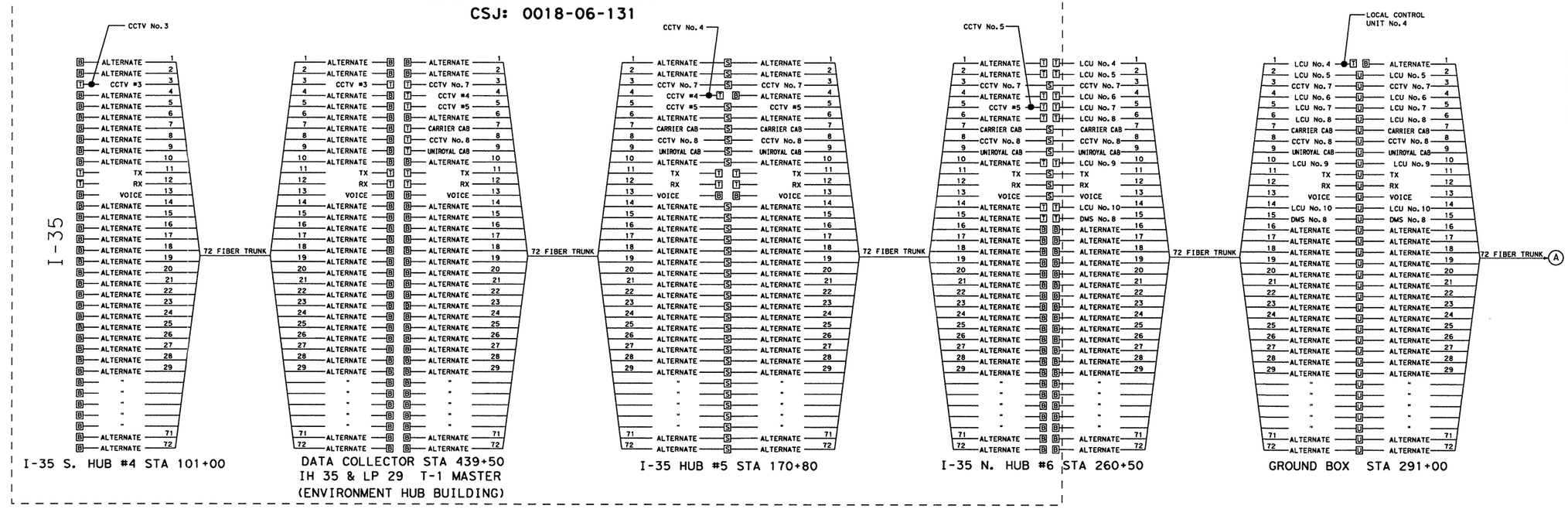

LEGEND

- S = FUSION SPLICE
- B = BULKHEAD CONNECTION
- T = FIBER TERMINATION
- U = FIBER UNCUT

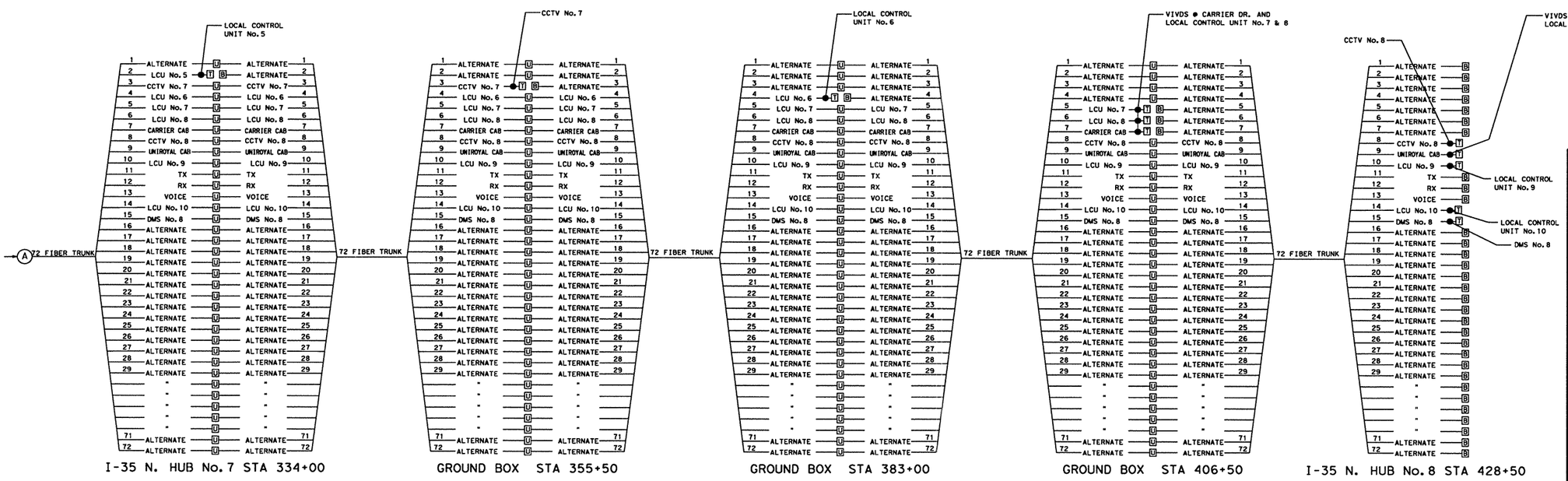

STATE OF TEXAS
DANNY MAGEE
83653
REGISTERED PROFESSIONAL ENGINEER

The seal appearing on this document was authorized by DANNY MAGEE PE 83653, on MAY 1, 2003.

©2003 Texas Department of Transportation

IH 35
LOOP 20 TO UNIROYAL ROAD

ITS
FIBER CABLE HUB
TERMINATION ASSIGNMENTS
(SINGLE MODE)

SHEET 1 OF 1

FED RD DIV NO	FEDERAL AID PROJECT NO		SHEET NO
6	NH-2002 (79)		724
STATE	STATE DIST		COUNTY
TEXAS	LAREDO		WEBB
CONT	SECT	JOB	HIGHWAY NO
0018	05	062, ETC	IH 35

2003/ITS/PROJECT/WEB/0018-05-062IH35WIDEN/IH35WIDENCAD; FILE NAME: B60 TERM ASSIGMENTS.DGN

HUB BUILDING #6 STA: 260+50

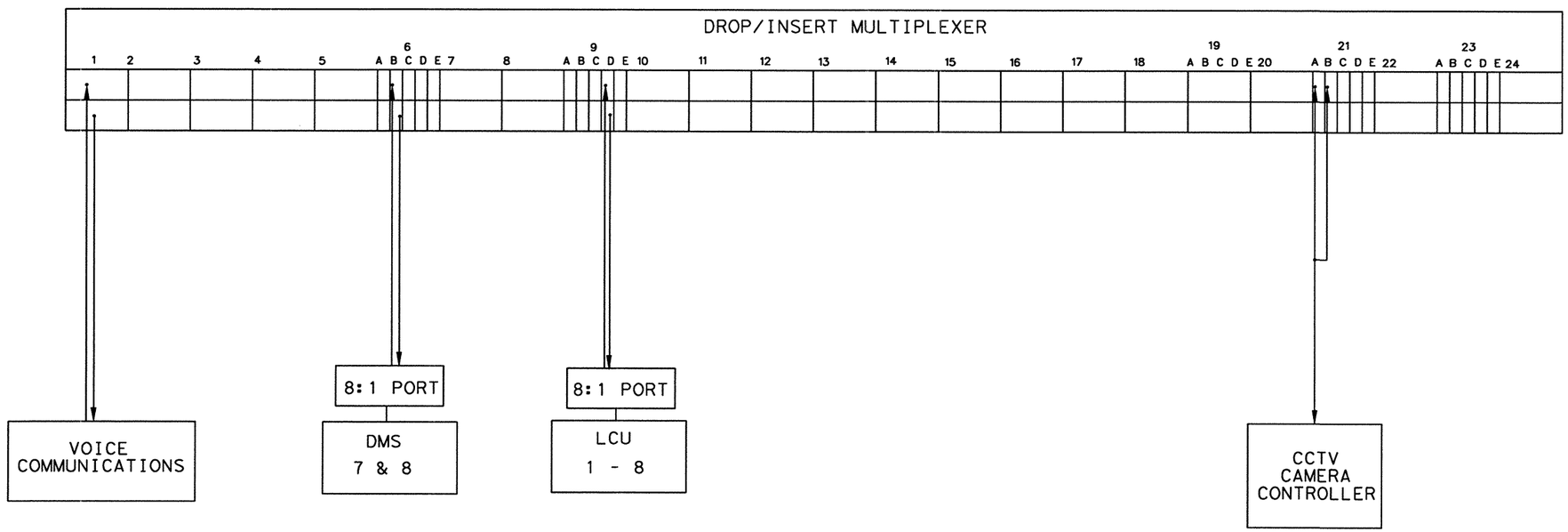

STATE OF TEXAS
DANNY MAGEE
83653
REGISTERED
PROFESSIONAL ENGINEER

The seal appearing on this document was authorized by DANNY MAGEE PE 83653, on MAY 1, 2003.

©2003 Texas Department of Transportation

IH 35
LOOP 20 TO UNIROYAL ROAD

ITS
DROP / INSERT
MULDEM ASSIGNMENT

SHEET 1 OF 3

FED RD DIV NO	FEDERAL AID PROJECT NO		SHEET NO
6	NH-2002 (79)		725
STATE	STATE DIST		COUNTY
TEXAS	LAREDO		WEBB
CONT	SECT	JOB	HIGHWAY NO
0018	05	062, ETC	IH 35

2003/ITS/PROJECT/WEB/0018-05-062IH35WIDEN/IH35WIDENCAD; FILE NAME: BGO CHANEL ASIG.DGN

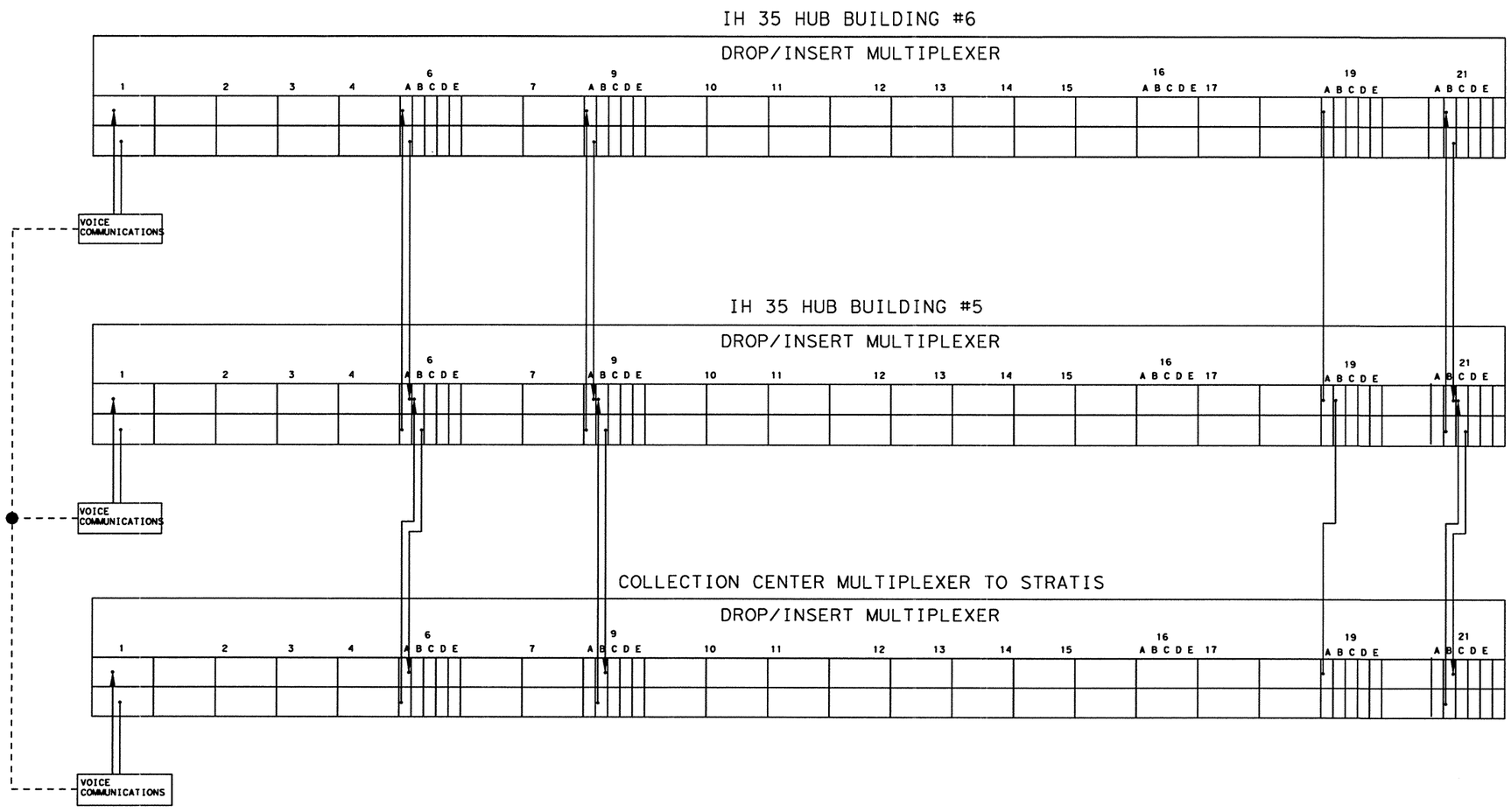

NOTE:
VOICE COMMUNICATIONS ~~SHALL BE~~
PARTY LINED, SO THAT THE TRAFFIC MANAGEMENT
CENTER ~~WILL BE~~ ABLE TO COMMUNICATE WITH ANY
CABINET IN THE FIELD.

STATE OF TEXAS
DANNY MAGEE
83653
REGISTERED
PROFESSIONAL ENGINEER

The seal appearing on this document was authorized by DANNY MAGEE PE 83653, on MAY 1, 2003.

©2003 Texas Department of Transportation

IH 35
LOOP 20 TO UNIROYAL ROAD

ITS
MULDEM ASSIGMENTS

SHEET 2 OF 3

FED RD DIV NO	FEDERAL AID PROJECT NO		SHEET NO
6	NH-2002 (79)		725 A
STATE	STATE DIST		COUNTY
TEXAS	LAREDO		WEBB
CONT	SECT	JOB	HIGHWAY NO
0018	05	062, ETC	IH 35

2003/ITS/PROJECT/WEB/0018-05-062IH35WIDEN/IH35WIDENCAD; FILE NAME: B60 CHANEL ASIG.DGN

HUB BUILDING #6 STA 260+50

ITEM/DEVICE	1	6A	6B	9A	9B	9D	19A	19B	21A	21B	21C	23A
VOICE	X											
FTM LCU 1-7						X						
DMS 1,2			X									

ENVIRONMENTAL BUILDING I-35 COLLECTION CENTER STA 130+00

ITEM/DEVICE	1	6A	6B	9A	9B	9D	19A	19B	21A	21B	21C	23A
VOICE	X											
NETWORK MANAGER												X
CCTV										X		
DMS1,2			X									
ACU 1							X					
ACU 2								X				

TRAFFIC MANAGEMENT CENTER MASTER STA TxDOT (LOOP 20)

ITEM/DEVICE	1	6A	6B	9A	9B	9D	19A	19B	21 A	21 B	21C	23A	23D
VOICE	X												
FTM LCU 1-7						X							
NETWORK MANAGER												X	
DMS1,2			X										
ACU 1							X						
ACU 2								X					
ACU MASTER													X

STATE OF TEXAS
DANNY MAGEE
83653
REGISTERED PROFESSIONAL ENGINEER

The seal appearing on this document was authorized by DANNY MAGEE PE 83653, on MAY 1, 2003.

©2003 Texas Department of Transportation

IH 35
LOOP 20 TO UNIROYAL ROAD

ITS
T-1 CHANNEL ASSIGNMENTS

SHEET 3 OF 3

FED RD DIV NO	FEDERAL AID PROJECT NO		SHEET NO
6	NH-2002 (79)		725 B
STATE	STATE DIST		COUNTY
TEXAS	LAREDO		WEBB
CONT	SECT	JOB	HIGHWAY NO
0018	05	062, ETC	IH 35

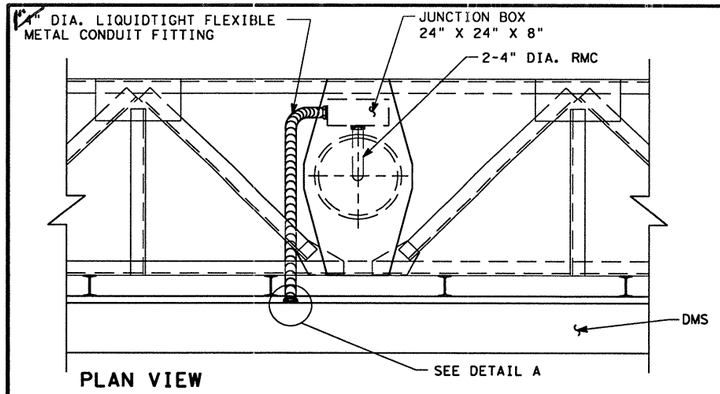

PLAN VIEW

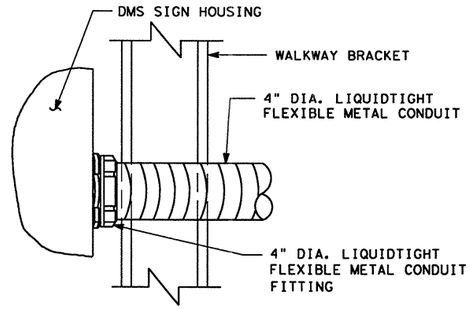

DETAIL "A"

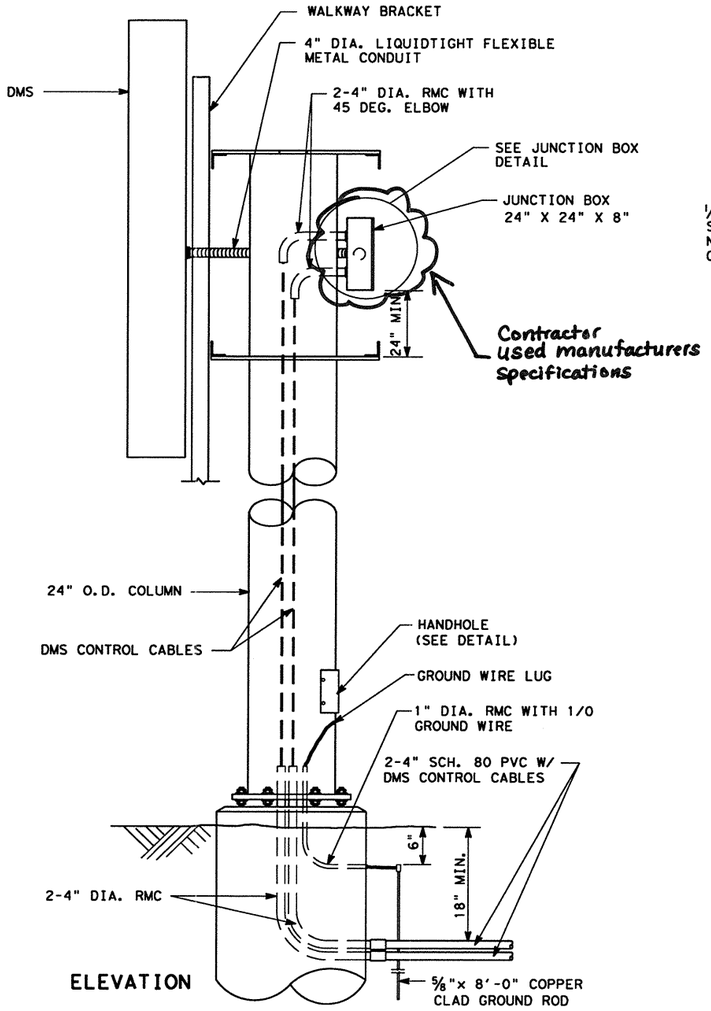

ELEVATION

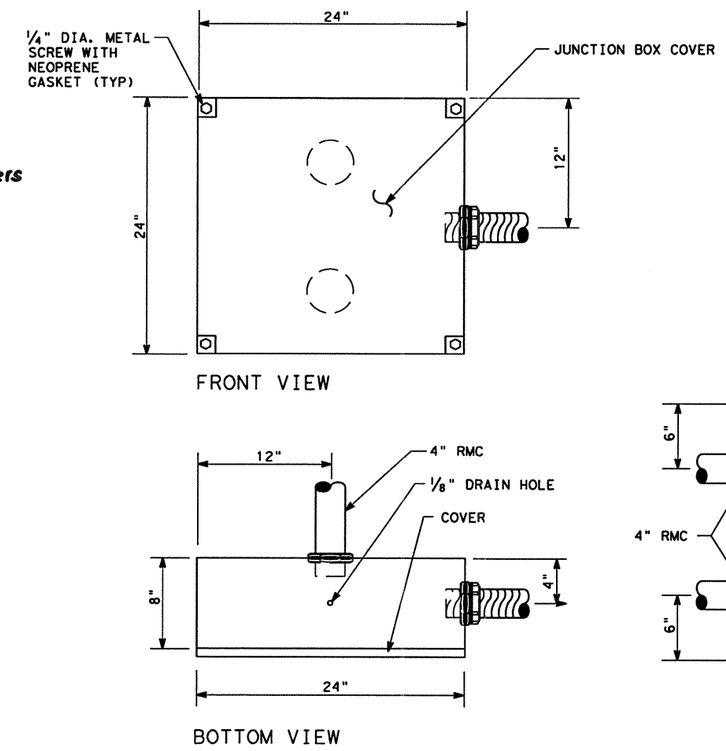

NOTES:

1. ROUTING OF FLEXIBLE CONDUIT ~~SHALL BE~~ DETERMINED BY MANUFACTURER OF CMS PROVIDED.
2. THE HOV LANE CONTROL PANEL CABINET ~~SHALL BE~~ BUILT IN ACCORDANCE WITH SPECIAL SPECIFICATION ITEM "CABINETS" (HOV DMS ONLY).
3. BANDING OF HOV LANE CONTROL PANEL CABINET TO COLUMN ~~SHALL NOT BE~~ ALLOWED.
4. JUNCTION BOX ~~SHALL BE~~ WEATHERPROOF NEMA 4X ENCLOSURE. FRONT FACE OF THE JUNCTION BOX ~~SHALL~~ HAVE A REMOVABLE NEMA 4X GASKETED COVER HELD IN PLACE BY A MINIMUM OF 4 SCREWS.

TYPICAL DMS ELECTRICAL DETAILS
JUNCTION BOX DETAIL

JUNCTION BOX DETAIL
24"X 24"X 8"

STATE OF TEXAS
DANNY MAGEE
83653
REGISTERED PROFESSIONAL ENGINEER

The seal appearing on this document was authorized by DANNY MAGEE PE 83653, on MAY 1, 2003.

©2003 Texas Department of Transportation

IH 35
LOOP 20 TO UNIROYAL ROAD

ITS
DYNAMIC MESSAGE SIGN
INSTALLATION DETAILS

SHEET 1 OF 2

FED RD DIV NO	FEDERAL AID PROJECT NO		SHEET NO
6	NH-2002 (79)		726
STATE	STATE DIST		COUNTY
TEXAS	LAREDO		WEBB
CONT	SECT	JOB	HIGHWAY NO
0018	05	062, ETC	IH 35

2003/ITS/PROJECT/WEB/0018-05-062IH35WIDEN/IH35WIDENCAD; FILE NAME: B60 DMS INST DET 1.DGN

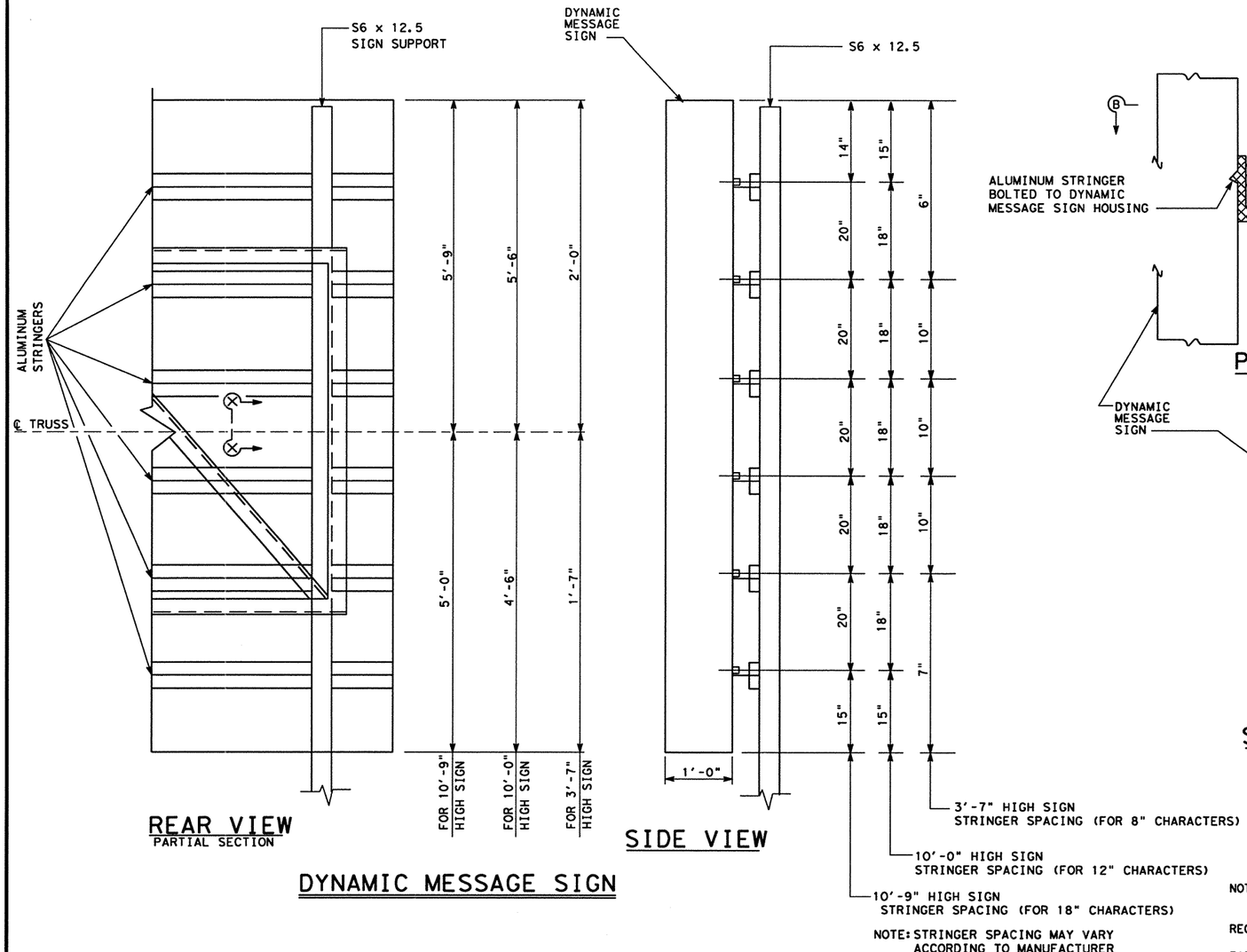

REAR VIEW
PARTIAL SECTION

SIDE VIEW

DYNAMIC MESSAGE SIGN

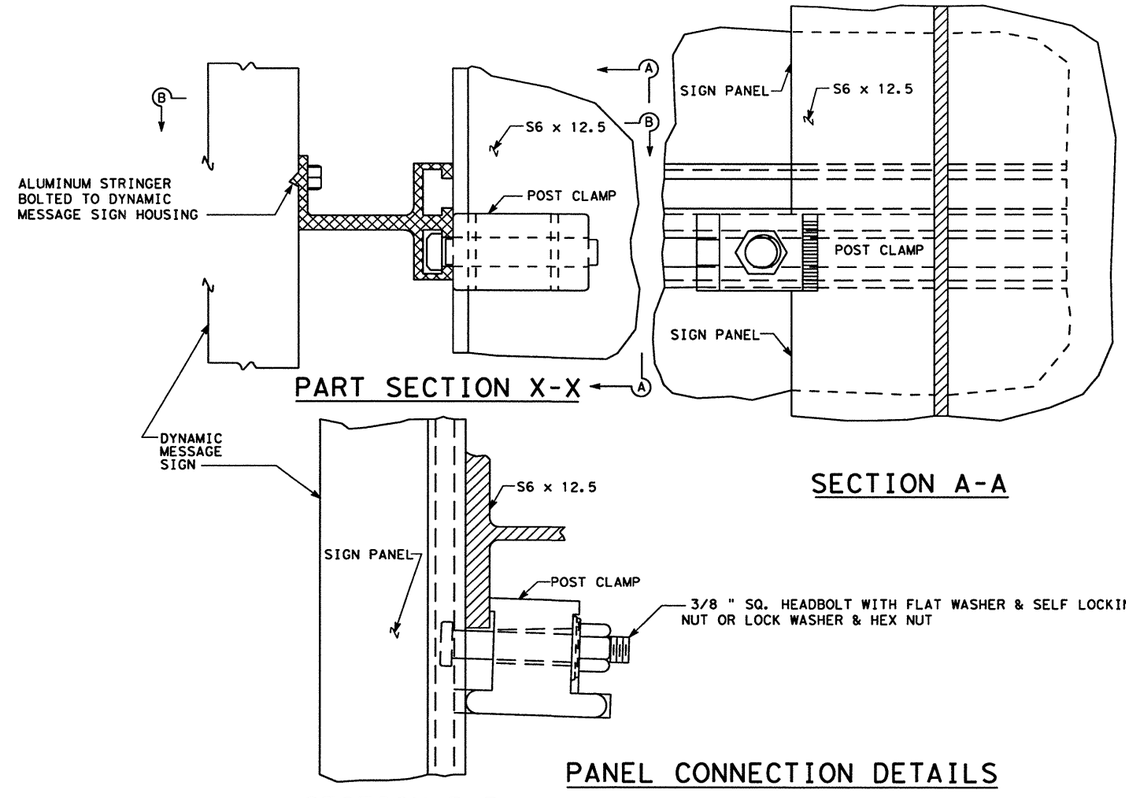

PART SECTION X-X

SECTION A-A

SECTION B-B

PANEL CONNECTION DETAILS

FOR 10'-9" HIGH SIGN
FOR 10'-0" HIGH SIGN
FOR 3'-7" HIGH SIGN

NOTES:

MATERIALS, FABRICATION, CONSTRUCTION AND ERECTION ~~SHALL~~ CONFORM WITH THE REQUIREMENTS OF THE DEPARTMENT'S STANDARD SPECIFICATIONS.

ALL STRUCTURAL STEEL, BOLTS, NUTS AND WASHERS ~~SHALL BE~~ GALVANIZED AFTER FABRICATION.

STRUCTURAL STEEL ~~SHALL~~ CONFORM WITH A.S.T.M. SPECIFCATION A-36. CLAMP BOLTS ~~SHALL~~ HAVE SQUARE HEADS AND HEXAGON NUTS AND CONFORM WITH A.S.T.M. SPECIFICATION A-307. DIMENSIONS ~~SHALL BE~~ IN ACCORDANCE WITH ANSI B 18.2.1.

ALUMINUM POST CLAMPS ~~SHALL BE~~ CAST ALUMINUM ALLOY 356-T6.
ALUMINUM BOLTS ~~SHALL BE~~ ALLOY 2024-T4.

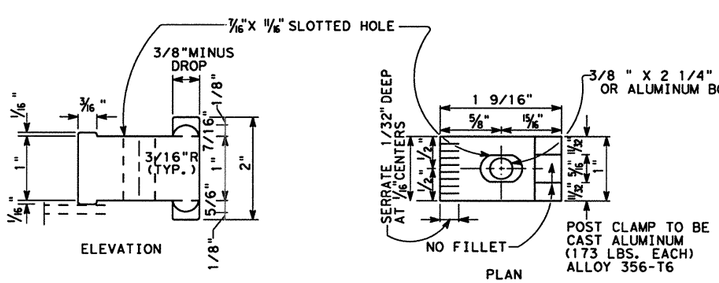

POST CLAMP DETAILS

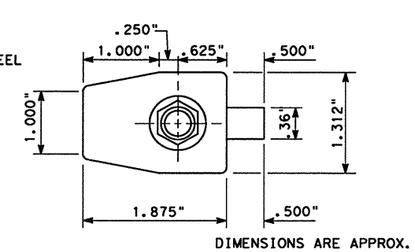

DIMENSIONS ARE APPROX.

ALTERNATE POST CLAMP DETAIL

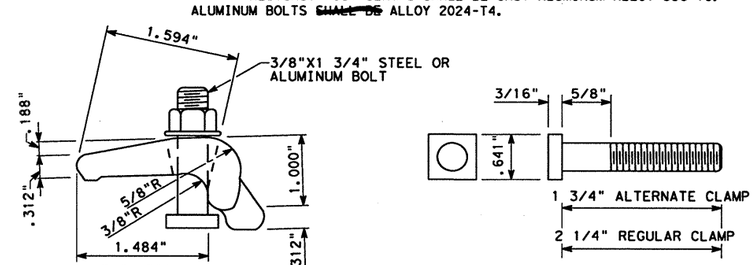

POST CLAMP BOLT DETAIL
(ALUMINUM ALLOY 2024-T4)

STATE OF TEXAS
DANNY MAGEE
83653
REGISTERED PROFESSIONAL ENGINEER

The seal appearing on this document was authorized by DANNY MAGEE PE 83653, on MAY 1, 2003.

©2003 Texas Department of Transportation

IH 35
LOOP 20 TO UNIROYAL ROAD

ITS
DYNAMIC MESSAGE SIGN
INSTALLATION DETAILS

SHEET 2 OF 2

FED RD DIV NO	FEDERAL AID PROJECT NO		SHEET NO
6	NH-2002 (79)		727
STATE	STATE DIST		COUNTY
TEXAS	LAREDO		WEBB
CONT	SECT	JOB	HIGHWAY NO
0018	05	062, ETC	IH 35

2003/ITS/PROJECT/WEB/0018-05-062IH35WIDEN/IH35WIDENCAD; FILE NAME: B60 DMS INST DET2.DGN

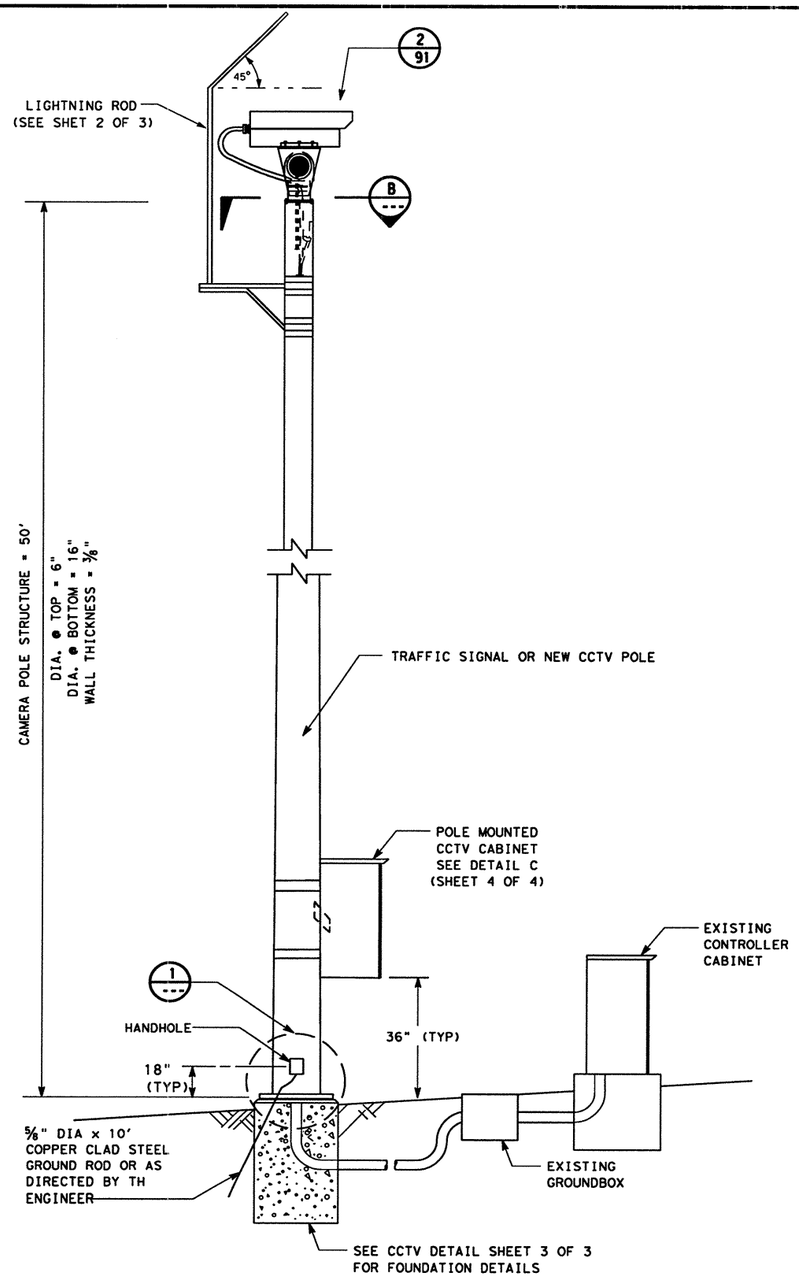

NOTE: SEE INTERSECTION LAYOUT FOR NUMBER, DEPTH, TYPE AND SIZE OF CONDUIT.

TYPICAL CAMERA POLE ELEVATION

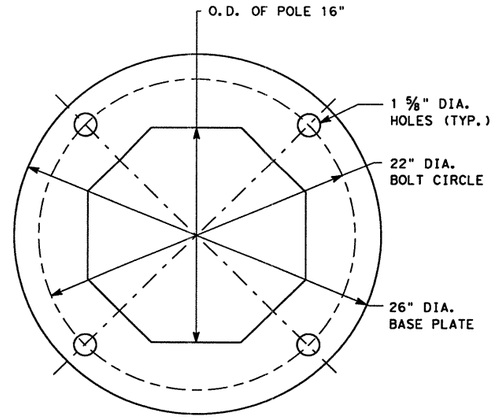

TYPICAL BASE PLATE PLAN

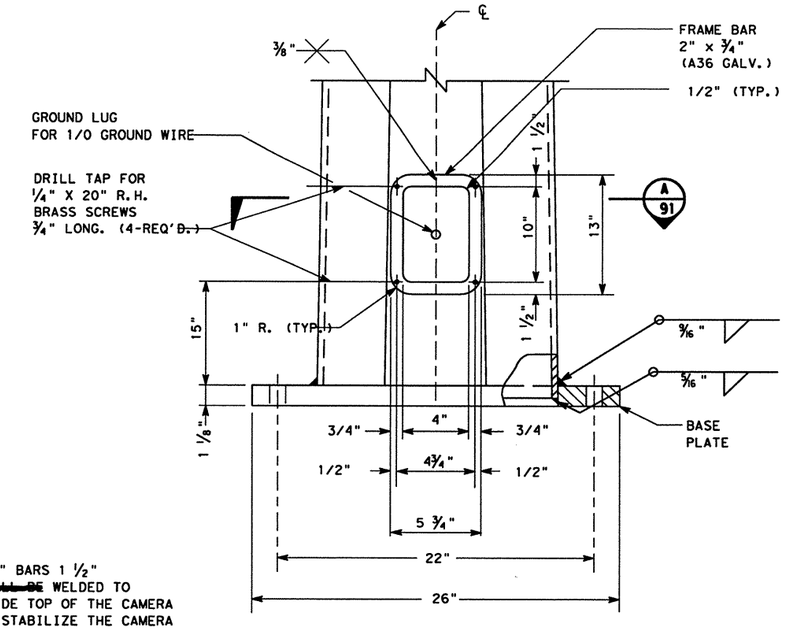

DETAIL 1

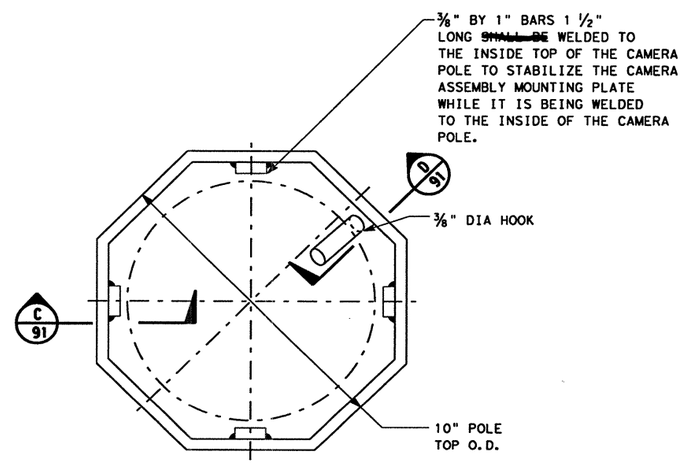

SECTION 'B'

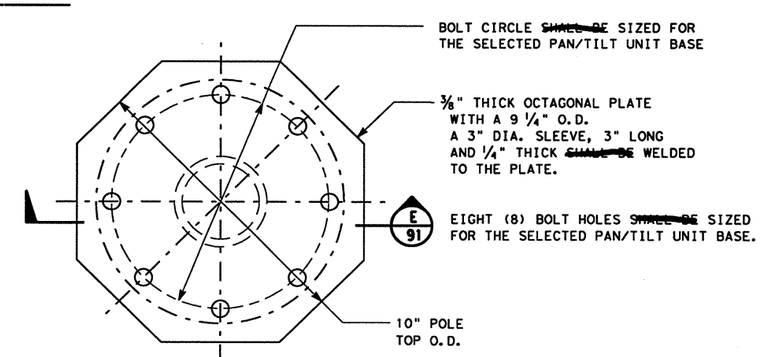

TYPICAL CAMERA ASSEMBLY MOUNTING PLATE "A"

STATE OF TEXAS
DANNY MAGEE
83653
REGISTERED PROFESSIONAL ENGINEER

The seal appearing on this document was authorized by DANNY MAGEE PE 83653, on MAY 1, 2003.

©2003 Texas Department of Transportation

IH 35
LOOP 20 TO UNIROYAL ROAD

ITS
CCTV GENERAL
DETAILS

SHEET 1 OF 4

FED RD DIV NO	FEDERAL AID PROJECT NO		SHEET NO
6	NH-2002 (79)		728
STATE	STATE DIST		COUNTY
TEXAS	LAREDO		WEBB
CONT	SECT	JOB	HIGHWAY NO
0018	05	062, ETC	IH 35

2003/ITS/PROJECT/WEB/0018-05-062IH35WIDEN/IH35WIDENCAD; FILE NAME: B60 CCTV1.DGN

NOTE:
PLATE DIAMETER AND BOLT HOLE PATTERN ~~SHALL BE~~ SIZED AND DESIGNED TO MATCH THE SELECTED PAN/TILT UNIT.

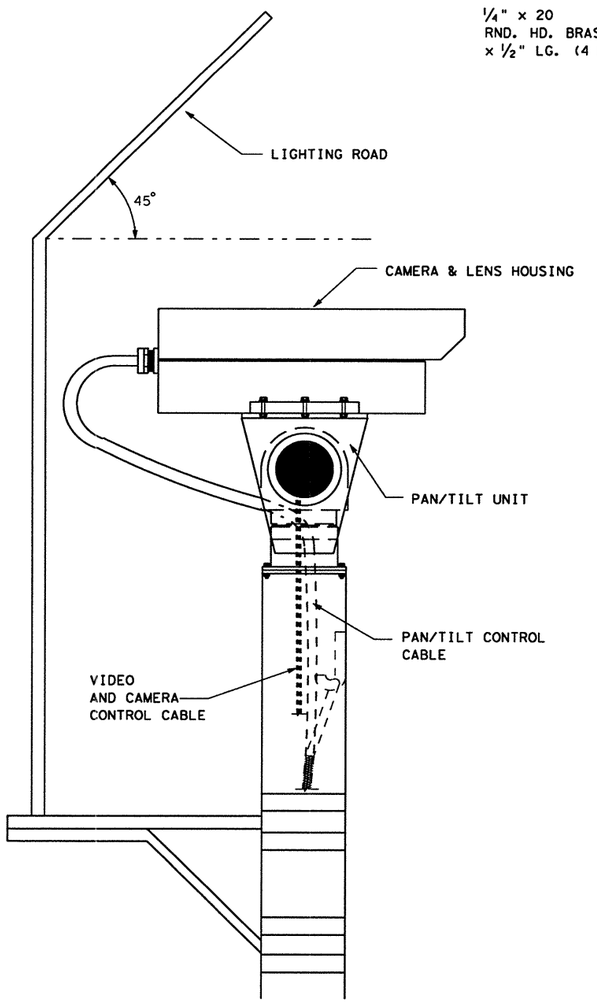

DETAIL 2

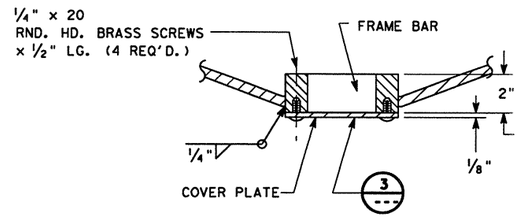

SECTION 'A'

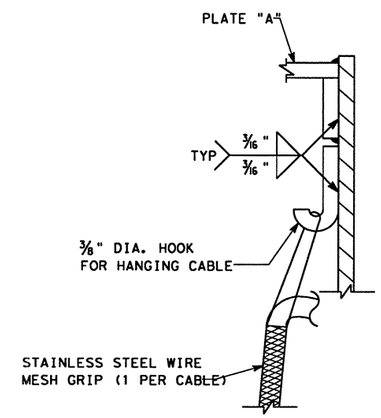

SECTION 'D'

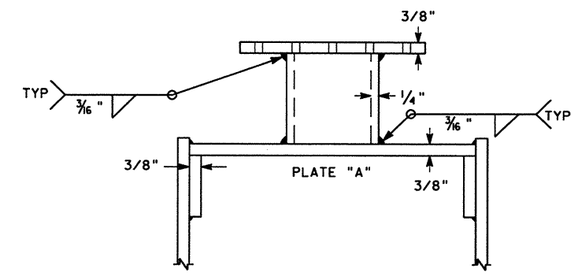

SECTION 'E'

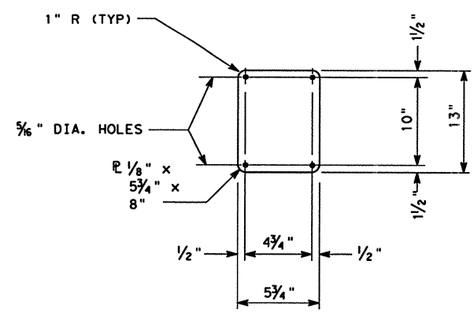

DETAIL 3

COVER PLATE DETAIL

(FOR HANDHOLE)
(A36 GALV.)

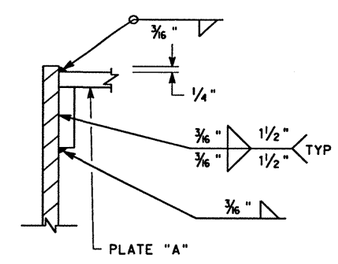

SECTION 'C'

STATE OF TEXAS
DANNY MAGEE
83653
REGISTERED
PROFESSIONAL ENGINEER

The seal appearing on this document was authorized by DANNY MAGEE PE 83653, on MAY 1, 2003.

©2003 Texas Department of Transportation

IH 35
LOOP 20 TO UNIROYAL ROAD

ITS
CCTV GENERAL DETAILS

SHEET 2 OF 4

FED RD DIV NO	FEDERAL AID PROJECT NO		SHEET NO
6	NH-2002 (79)		729
STATE	STATE DIST		COUNTY
TEXAS	LAREDO		WEBB
CONT	SECT	JOB	HIGHWAY NO
0018	05	062, ETC	IH 35

2003/ITS/PROJECT/WEB/0018-05-062IH35WIDEN/IH35WIDENCAD; FILE NAME: 860 CCTV2.DGN

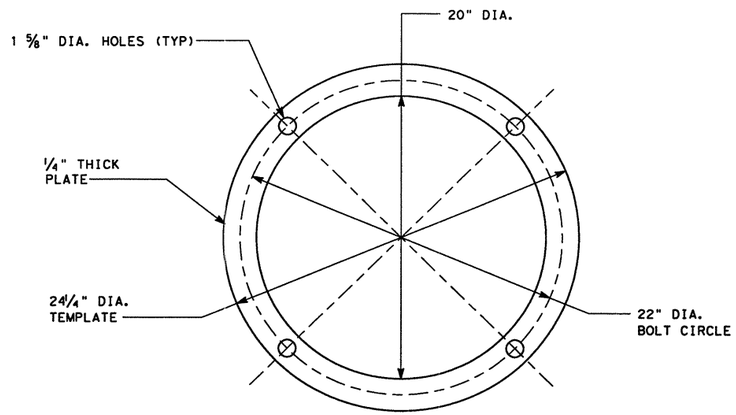

DETAIL 1
ANCHOR PLATE DETAIL
(TOP AND BOTTOM)

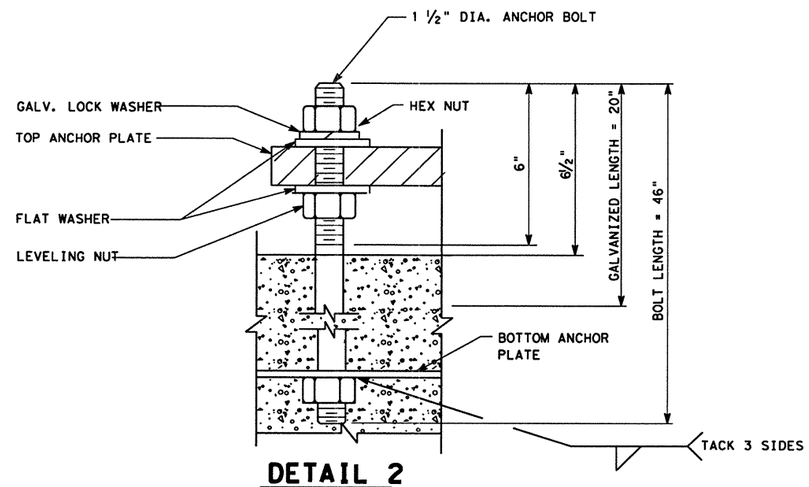

DETAIL 2
ANCHOR BOLT DETAIL

NOTES:

1. DESIGN CONFORMS TO 1975 AASHTO STANDARD SPECIFICATIONS FOR STRUCTURAL SUPPORTS FOR HIGHWAY SIGNS, LUMINAIRES, AND TRAFFIC SIGNALS. DESIGN WIND SPEED EQUALS 100 MPH PLUS A 1.3 GUST FACTOR.
2. STRUCTURAL STEEL FOR THE POLE ~~SHALL~~ CONFORM TO ASTM A595 GR A OR ASTM 570 GR50 OR ASTM A607 GR50 OR ASTM A572 GR50 OR A36M50.
3. STRUCTURAL STEEL FOR PLATES ~~SHALL~~ CONFORM TO ASTM A36 OR A572 GR50 OR A595 GR A OR A36M5D.
4. FABRICATION AND WELDING OF STRUCTURES ~~SHALL BE~~ IN ACCORDANCE WITH ITEM "STEEL STRUCTURES". THE FABRICATOR ~~SHALL~~ SUBMIT PROPOSED WELDING PROCEDURES WITH THE SHOP DRAWINGS. THE SHOP DRAWINGS, WHEN SUBMITTED, ~~SHALL~~ INCLUDE THE WELDING PROCEDURE NUMBER ASSIGNED BY THE DIVISION OF MATERIALS AND TEST OF THE TEXAS DEPARTMENT OF TRANSPORTATION. THIS WELDING PROCEDURE NUMBER ~~SHALL BE~~ PLACED ADJACENT TO THE APPROPRIATE WELDING SYMBOL.
5. ANCHOR BOLTS ~~SHALL~~ CONFORM TO A-193 B7. NUTS FOR ANCHOR BOLTS ~~SHALL BE~~ HEAVY HEX AND CONFORM TO ASTM A-194 GR 2H. THE TOP 20" OF THE ANCHOR BOLT AND NUTS AND WASHERS ~~SHALL BE~~ GALVANIZED. UNLESS OTHERWISE NOTED, ALL PARTS ~~SHALL BE~~ REINFORCING IN ACCORDANCE WITH THE SPECIFICATIONS. STEEL ~~SHALL~~ CONFORM TO ITEM 440. ALL REINFORCING STEEL ~~SHALL BE~~ MINIMUM GRADE 60.
6. CONCRETE SHALL BE CLASS C.
7. THE CONTRACTOR ~~SHALL~~ FIELD VERIFY ALL ANCHOR BOLT MEASUREMENTS PRIOR TO FABRICATION OF ANCHOR PLATES. THE CONTRACTOR ~~SHALL~~ CLEAN ALL ABRASIONS AND FIELD WELDS WITH A WIRE BRUSH AND ~~SHALL~~ APPLY TWO COATS OF ZINC RICH PAINT TO THE UNGALVANIZED AREAS OF THE STRUCTURE.
8. THE CONTRACTOR ~~SHALL~~ HANG ALL CABLING INSIDE CAMERA POLE STRUCTURE WITH STAINLESS STEEL WIRE MESH GRIPS.
9. BOLT POSITIONING IN THE TOP PLATE FOR THE PAN/TILT BASE WILL BE DETERMINED IN THE FIELD. THE 8 (EIGHT) BOLT HOLES REQUIRED WILL ALLOW POSITIONING OF THE LIMIT SWITCH SO THAT THE CAMERA BLIND ZONE IS PROPERLY LOCATED. THE ENGINEER WILL DETERMINE THE CAMERA'S BLIND ZONE AT EACH LOCATION.
10. THE CONTRACTOR ~~SHALL~~ FURNISH ALL MATERIALS NECESSARY TO INSTALL THE CCTV CAMERA POLE. SUCH WORK ~~SHALL BE~~ PAID FOR UNDER THE ITEM "CAMERA POLE STRUCTURE".
11. CCTV POLES THAT HAVE TRAFFIC SIGNAL MAST ARMS ~~SHALL~~ FOLLOW THE GUIDLINES OF TS-FD-99 FOR FOUNDATION DETAILS.

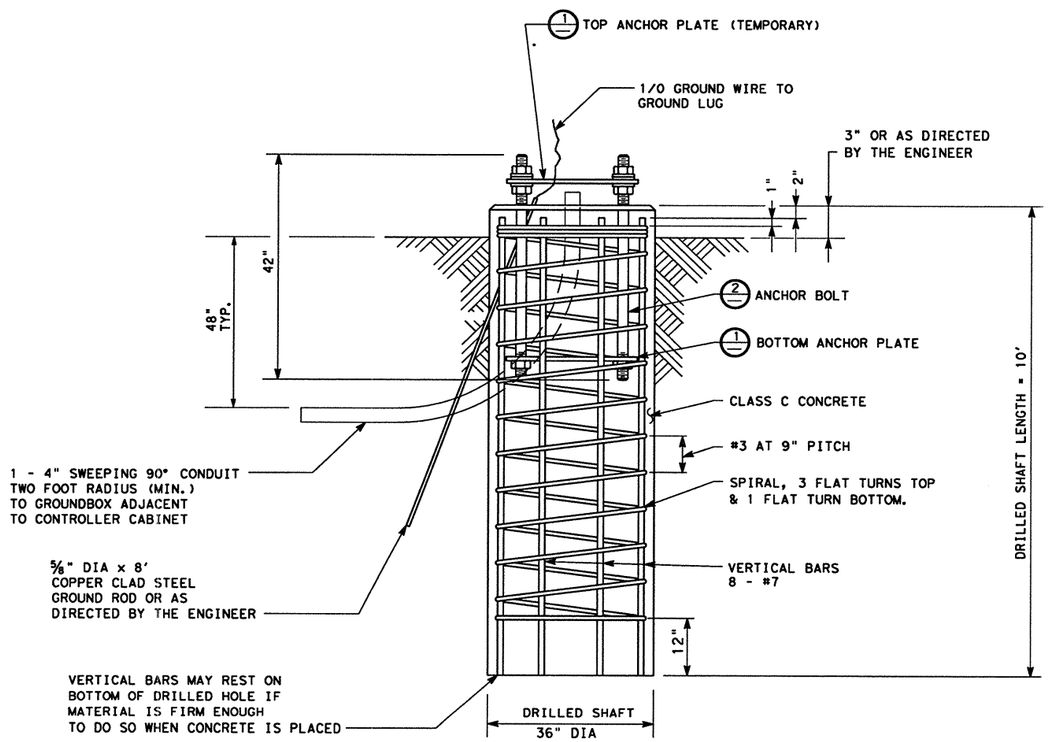

FOUNDATION DETAILS (SEE NOTE #11)
ELEVATION

FOUNDATION SUMMARY TABLE

LOCATION IDENTIFICATION	FDN TYPE	NO. EA	DRILLED SHAFT LENGTH (FEET)				
SHEET 2 OF 12	36-DIA	1			10		
SHEET 8 OF 12	36-DIA	1			10		
SHEET 11 OF 12	36-DIA	1			10		
TOTAL DRILLED SHAFT LENGTHS					30		

STATE OF TEXAS
DANNY MAGEE
83653
REGISTERED PROFESSIONAL ENGINEER

The seal appearing on this document was authorized by DANNY MAGEE PE 83653, on MAY 1, 2003.

©2003 Texas Department of Transportation

IH 35
LOOP 20 TO UNIROYAL ROAD

ITS
CCTV GENERAL DETAILS

SHEET 3 OF 4

FED RD DIV NO	FEDERAL AID PROJECT NO		SHEET NO
6	NH-2002 (79)		730
STATE	STATE DIST		COUNTY
TEXAS	LAREDO		WEBB
CONT	SECT	JOB	HIGHWAY NO
0018	05	062, ETC	IH 35

2003/ITS/PROJECT/WEB/0018-05-062IH35WIDEN/IH35WIDENCAD; FILE NAME: B60 CCTV3.DGN

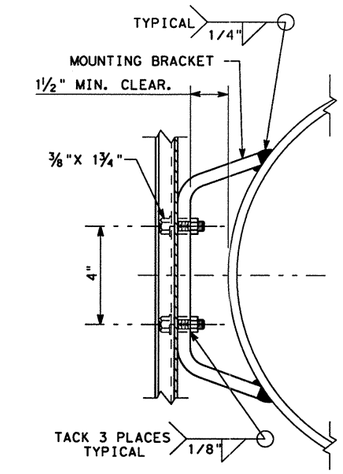

SECTION A-A

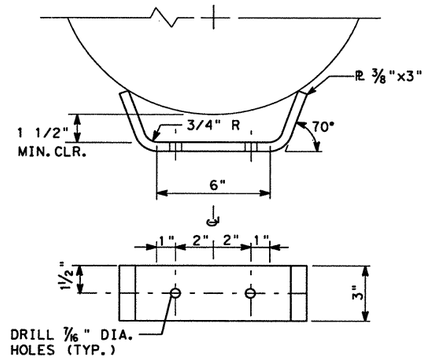

MOUNTING BRACKETS DETAILS

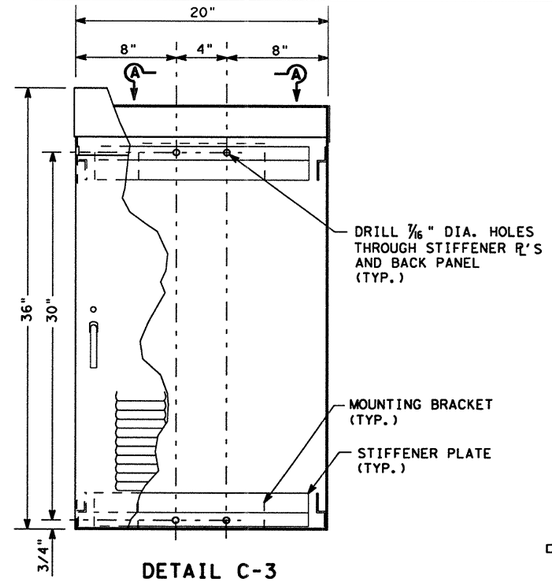

DETAIL C-3

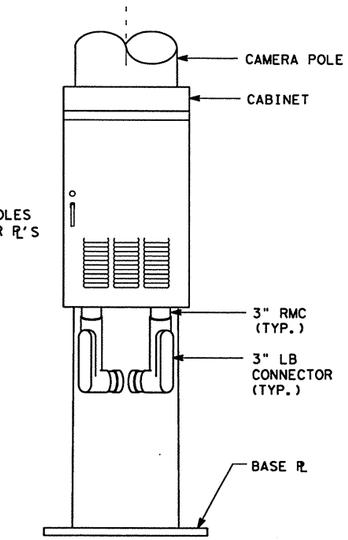

ELEVATION

NOTES:

THE CCTV CABINET ~~SHALL BE~~ MOUNTED PLUMB IN ALL DIRECTIONS.

CCTV CABINET ~~SHALL BE~~ PROVIDED WITH A NUMBER 2 CORBIN LOCK.

THE CAMERA POLE AND ALL MOUNTING BRACKETS SHALL BE HOT DIP GALVANIZED.
ALL HARDWARE USED ON THE POLE ~~SHALL BE~~ STAINLESS STEEL.

THE TWO EXTERNAL LB CONNECTORS ~~SHALL BE~~ MOUNTED EVENLY (HORIZONTALLY) AND ~~SHALL~~ NOT EXTEND BEYOND THE SIDES OF THE CABINET.

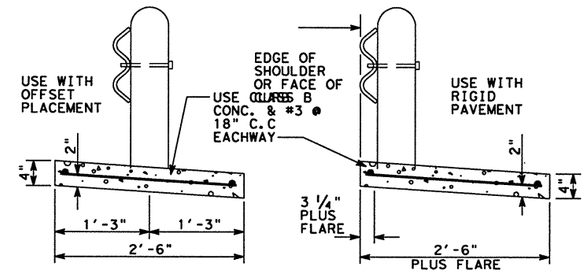

MOWING STRIP TO BE PROVIDED UNLESS SHOWN OTHERWISE IN PLANS. MOWING STRIP WILL NOT BE PAID FOR DIRECTLY BUT SHALL BE CONSIDERED INCIDENTAL TO THE VARIOUS BID ITEMS.

GUARD FENCE - MOWING STRIP DETAIL

DETAIL SCALE: 1" = 1'

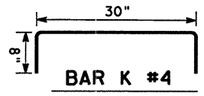

BAR K #4

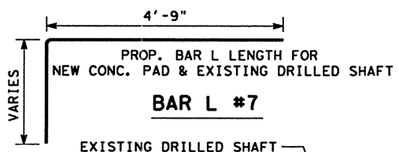

BAR L #7

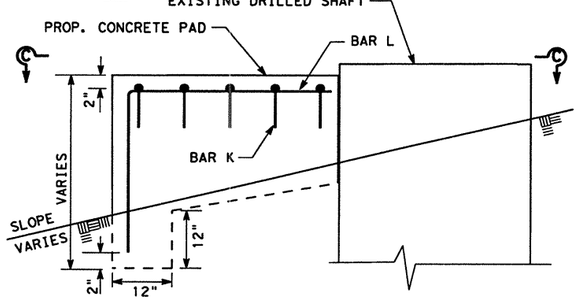

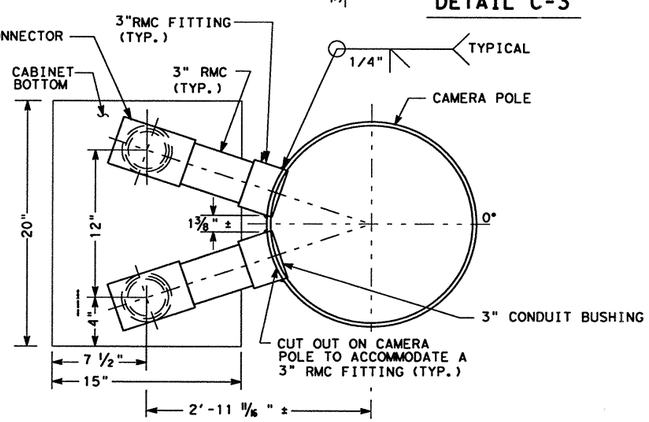

DETAIL C-1

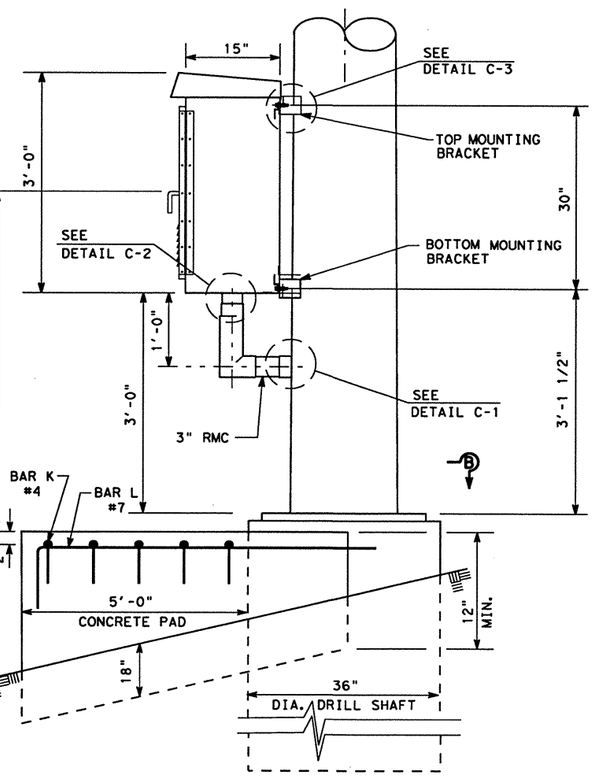

DETAIL C

SIDE VIEW

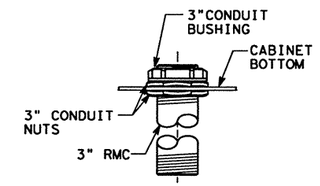

DETAIL C-2

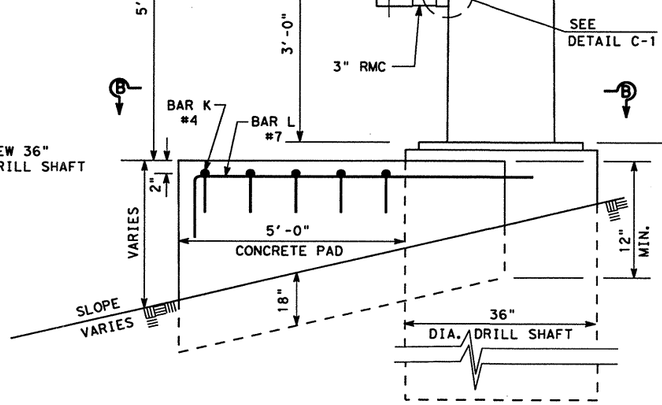

BAR L #7

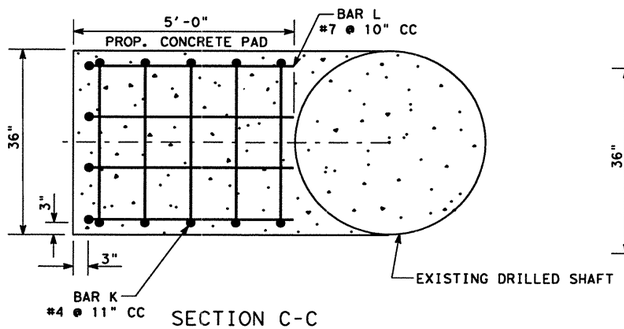

SECTION C-C

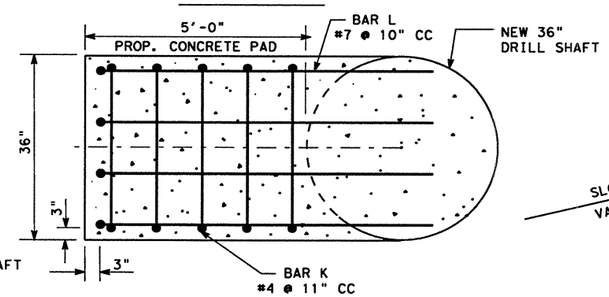

SECTION B-B

STATE OF TEXAS
DANNY MAGEE
83653
REGISTERED PROFESSIONAL ENGINEER

The seal appearing on this document was authorized by DANNY MAGEE PE 83653, on MAY 1, 2003.

©2003 Texas Department of Transportation

IH 35
LOOP 20 TO UNIROYAL ROAD

ITS
CCTV GENERAL DETAILS

SHEET 4 OF 4

FED RD DIV NO	FEDERAL AID PROJECT NO		62 SHEET NO
6	NH-2002 (79)		731
STATE	STATE DIST		COUNTY
TEXAS	LAREDO		WEBB
CONT	SECT	JOB	HIGHWAY NO
0018	05	062, ETC	IH 35

2003/ITS/PROJECT/WEB/0018-05-062IH35WIDEN/IH35WIDENCAD; FILE NAME: B60 CCTV4.DGN

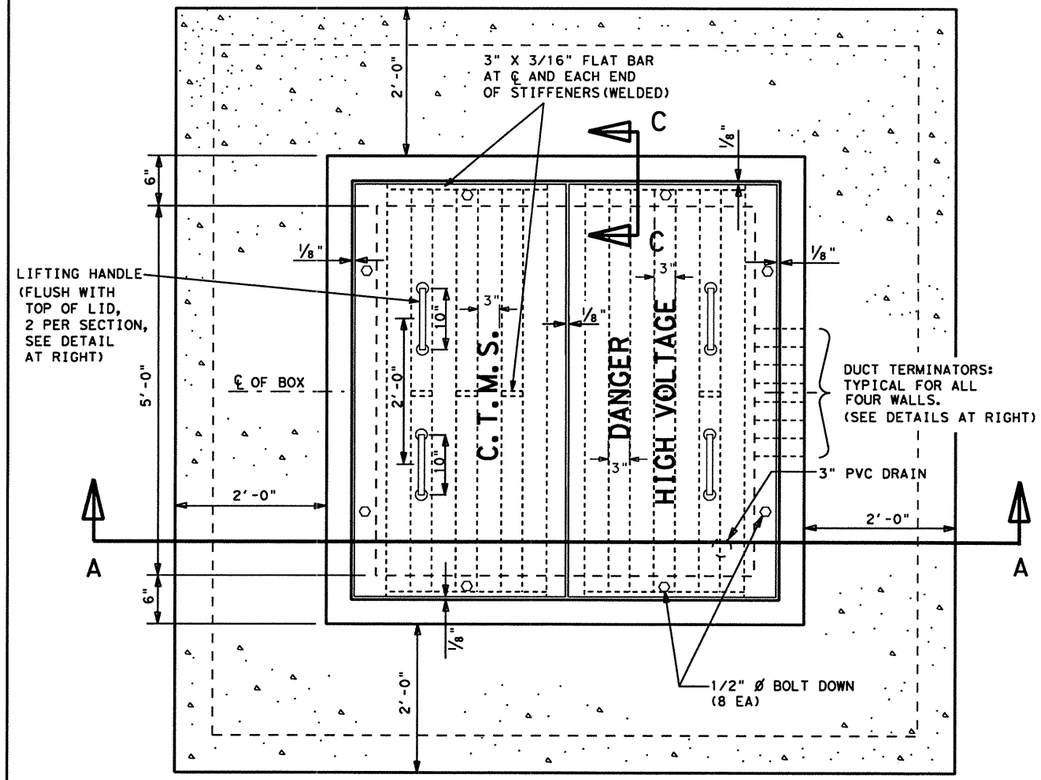

PLAN

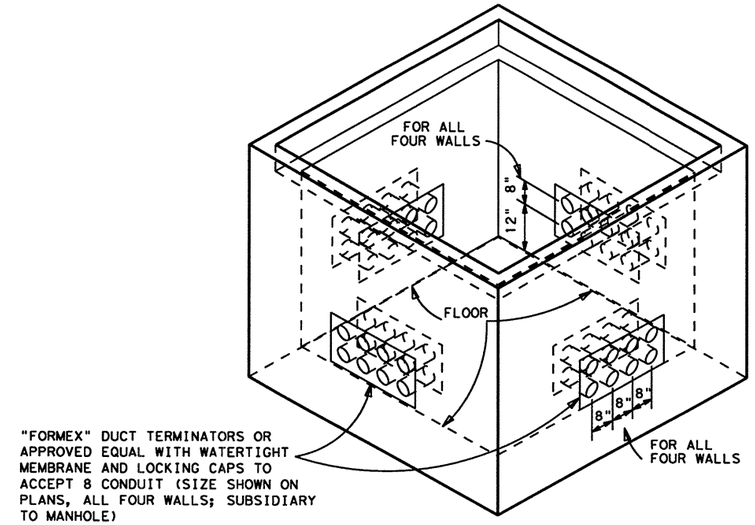

NOTES:

1. ALL CONCRETE, EXCEPT RIPRAP APRON, ~~SHALL BE~~ CLASS A
2. CONTRACTOR ~~SHALL BE~~ PERMITTED TO SUBMIT EQUIVALENT DESIGN FOR APPROVAL BY THE ENGINEER.
3. ALL STRUCTURAL STEEL ~~SHALL BE~~ HOT DIPPED GALVANIZED
4. ALL STRUCTURAL STEEL ~~SHALL BE~~ DESIGNED FOR H-20 LOADING FOR MANHOLES IN ROADWAY AND H-15 LOADING FOR MANHOLES NOT IN ROADWAY.
5. REINFORCING STEEL ~~SHALL BE~~ ADJUSTED AS NEEDED FOR THE CONDUITS
6. MANHOLE ~~SHALL BE~~ INSTALLED PARALLEL TO GRADE
7. PRIOR TO SETTING, THE CONTRACTOR ~~SHALL~~ PROVIDE A MINIMUM OF SIX (6) INCHES OF SAND OR BASE MATERIAL SUITABLE AS A BASE TO RECEIVE MANHOLE. THE BASE MATERIAL ~~SHALL BE~~ COMPACTED AND GRADED LEVEL AND AT A PROPER ELEVATION TO RECEIVE THE MANHOLE IN RELATION TO THE CONDUIT GRADE OR GROUND COVER REQUIREMENTS AS DESIGNATED IN THE PLANS
8. CONDUIT ~~SHALL BE~~ ATTACHED TO 4 HOLES CLOSEST TO R.O.W. LINE.
9. MANHOLE ~~SHALL BE~~ POSITIONED SO THAT DRAIN HOLE IS AT LOWEST ELEVATION.
10. RIPRAP APRON ~~SHALL BE~~ TAPERED SO THAT OUTSIDE EDGE OF APRON IS 1½" BELOW TOP OF MANHOLE.

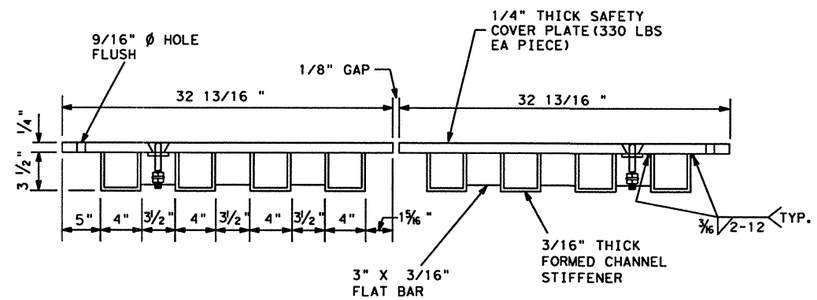

LID DETAIL

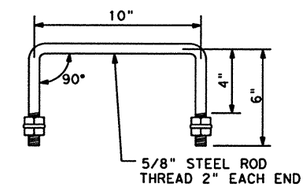

HANDLE DETAIL

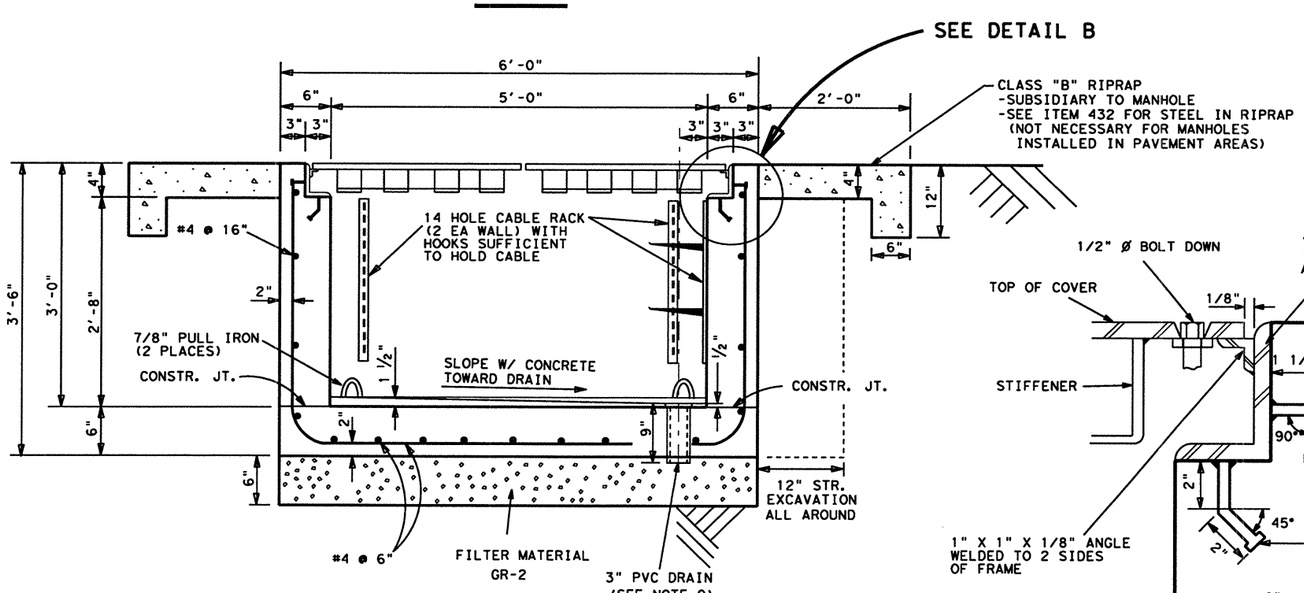

SECTION A-A

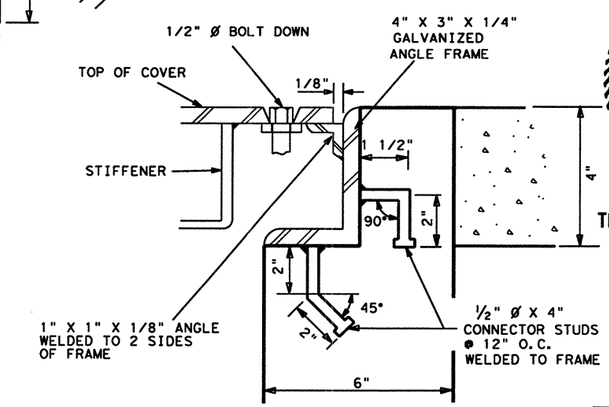

DETAIL B

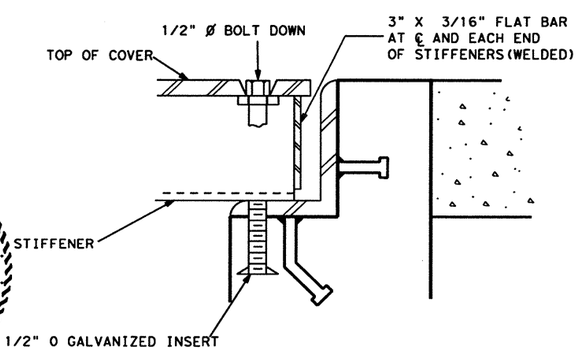

SECTION C-C

STATE OF TEXAS
DANNY MAGEE
83653
REGISTERED
PROFESSIONAL ENGINEER

The seal appearing on this document was authorized by DANNY MAGEE, P.E. 83653, on MAY 1, 2003.

ITS GROUND BOX (COMPLETE) (TY 2)

© 2003 Texas Department of Transportation

REV. 12-17-02
REV. 12-06-01
REV. 01-09-01
REV. 10-15-98
REV. 03-26-98
REV. 08-30-96
REV. 09-01-95

FED. RD. DIV. NO.	FEDERAL AID PROJECT NO.		SHEET NO.
6	NH 2002 (683)		732
STATE	DIST.	COUNTY	
TEXAS	15	BEXAR	
CONT.	SECT.	JOB	HIGHWAY NO.
0521	04	223	IH 410

2003/ITS/PROJECT/WEB/0018-05-062IH35WIDEN/IH35WIDENCAD; FILE NAME: B60 GROUND BOX 1 2.DGN

$TIME$
$DATE$
$FILE$

LEVELS 1 2 3 5 6 7 8 9 10 11 12 13 14 15 16
18 19 20 21 22 23 24 25 26 27 28 29 30 31 32
33 34 35 36 37 38 39 40 41 43 44 45 46 47 48
49 50 51 52 53 54 55 56 57 58 59 63

ACC:
FILE: .DGN

FTM: \standard\typea ne.dgn

PLAN

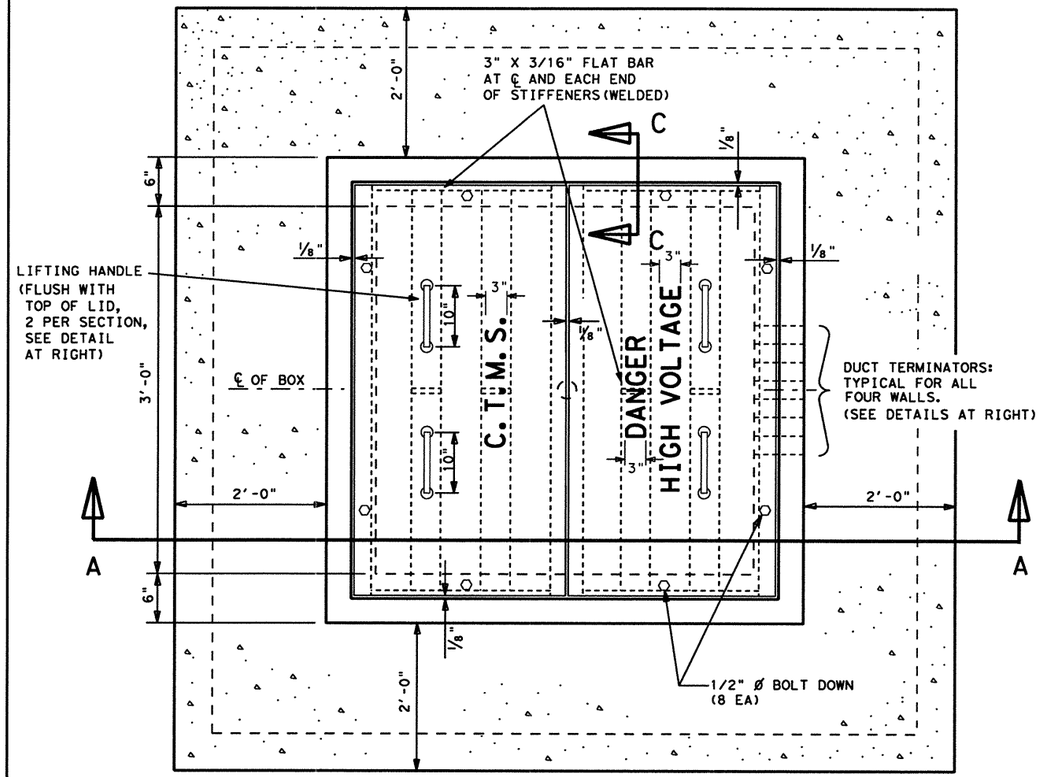

PLAN

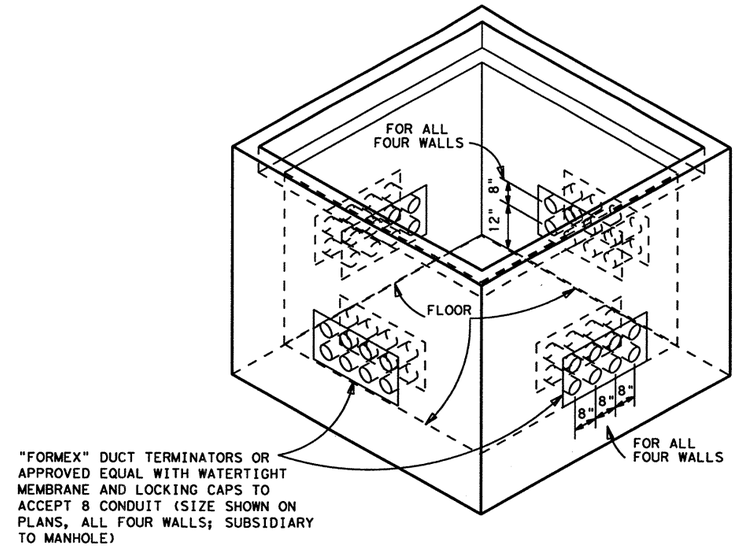

NOTES:

1. ALL CONCRETE, EXCEPT RIPRAP APRON, ~~SHALL BE~~ CLASS A (4500 PSI)
2. CONTRACTOR ~~SHALL BE~~ PERMITTED TO SUBMIT EQUIVALENT DESIGN FOR APPROVAL BY THE ENGINEER.
3. ALL STRUCTURAL STEEL ~~SHALL BE~~ HOT DIPPED GALVANIZED
4. ALL STRUCTURAL STEEL ~~SHALL BE~~ DESIGNED FOR H-15 LOADING
5. REINFORCING STEEL ~~SHALL BE~~ ADJUSTED AS NEEDED FOR THE CONDUITS
6. MANHOLE ~~SHALL BE~~ INSTALLED PARALLEL TO GRADE
7. PRIOR TO SETTING, THE CONTRACTOR ~~SHALL~~ PROVIDE A MINIMUM OF SIX (6) INCHES OF SAND OR BASE MATERIAL SUITABLE AS A BASE TO RECEIVE MANHOLE. THE BASE MATERIAL ~~SHALL BE~~ COMPACTED AND GRADED LEVEL AND AT A PROPER ELEVATION TO RECEIVE THE MANHOLE IN RELATION TO THE CONDUIT GRADE OR GROUND COVER REQUIREMENTS AS DESIGNATED IN THE PLANS.
8. CONDUIT ~~SHALL BE~~ ATTACHED TO 4 HOLES CLOSEST TO R.O.W. LINE.
9. MANHOLE ~~SHALL BE~~ POSITIONED SO THAT DRAIN HOLE IS AT LOWEST ELEVATION.

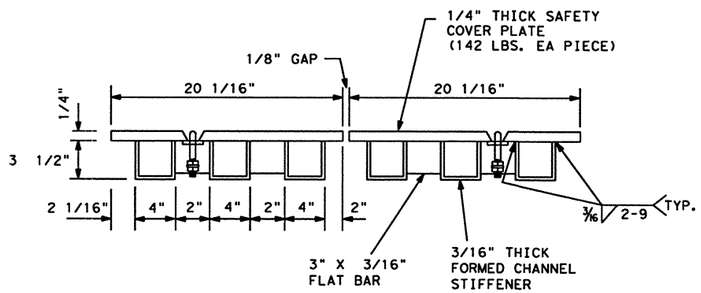

LID DETAIL

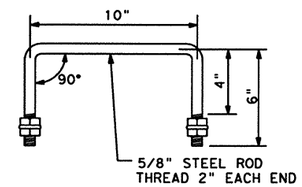

HANDLE DETAIL

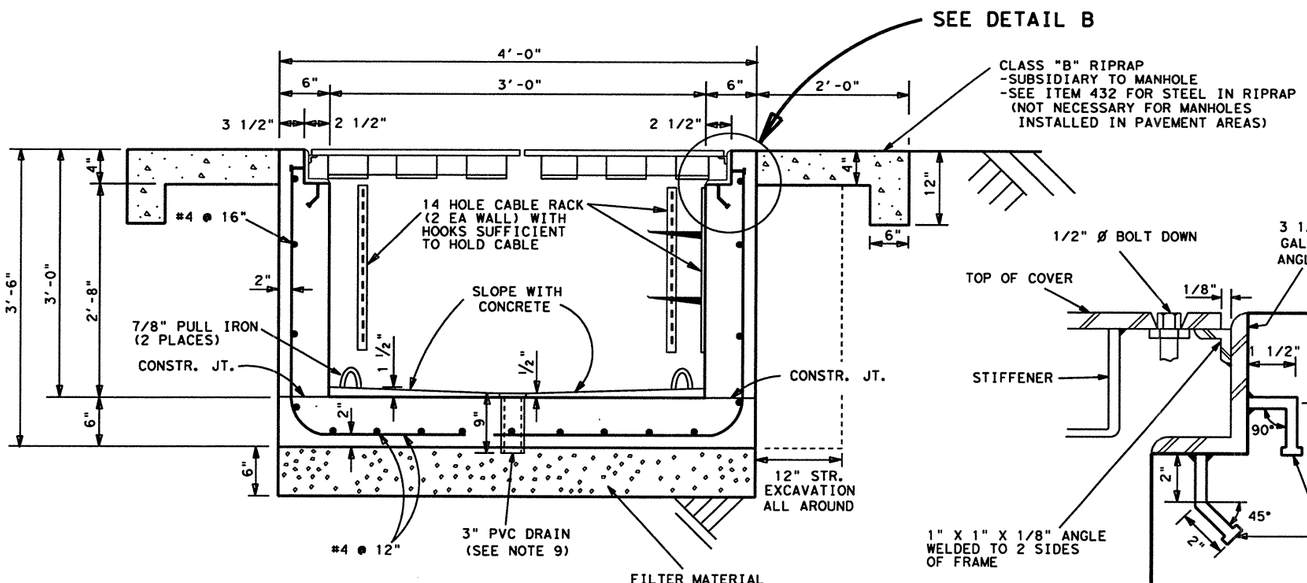

SECTION A-A

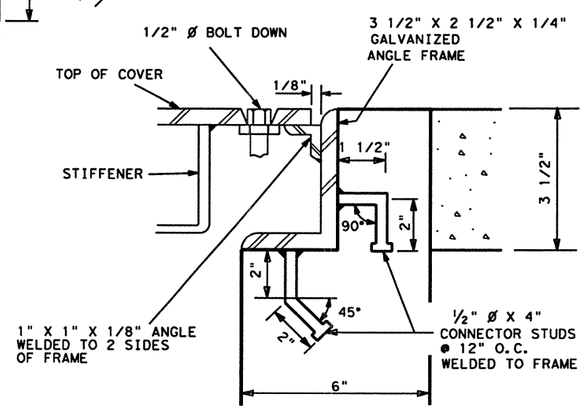

DETAIL B

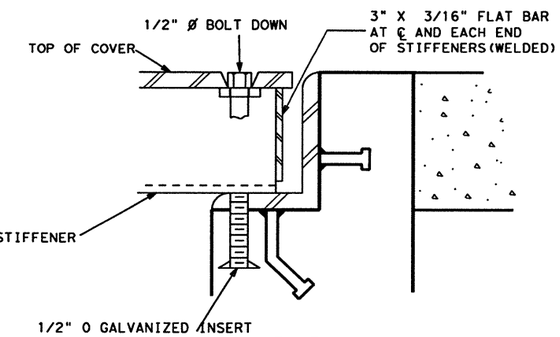

SECTION C-C

STATE OF TEXAS
DANNY MAGEE
83653
REGISTERED
PROFESSIONAL ENGINEER

The seal appearing on this document was authorized by DANNY MAGEE, P.E. 83653, on MAY 1, 2003.

ITS GROUND BOX (COMPLETE) (TY 1)

© 2003 Texas Department of Transportation

REV. 01-09-01	FED. RD. DIV. NO.	FEDERAL AID PROJECT NO.		SHEET NO.
REV. 09-06-99	6	NH 2002 (683)		733
REV. 10-15-98	STATE	DIST.	COUNTY	
REV. 10-06-98	TEXAS	15	BEXAR	
REV. 03-26-98	CONT.	SECT.	JOB	HIGHWAY NO.
REV. 08-30-96	0521	04	223	IH 410

2003/ITS/PROJECT/WEB/0018-05-062IH35WIDEN/IH35WIDENCAD; FILE NAME: B60 GROUND BOX 1 2.DGN

$TIME$
$DATE$
$FILE$

LEVELS D. ACC:
FILE: .DGN
63

FTM: \standard\typeb_ne.dgn

PLAN

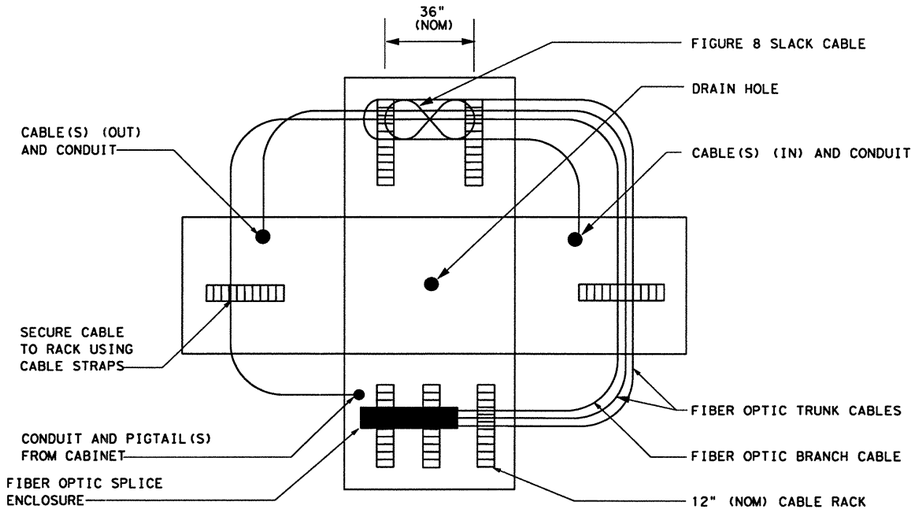

CABLE INSTALLATION

TOP VIEW - WALLS FOLDED
DOWN FOR CLARITY

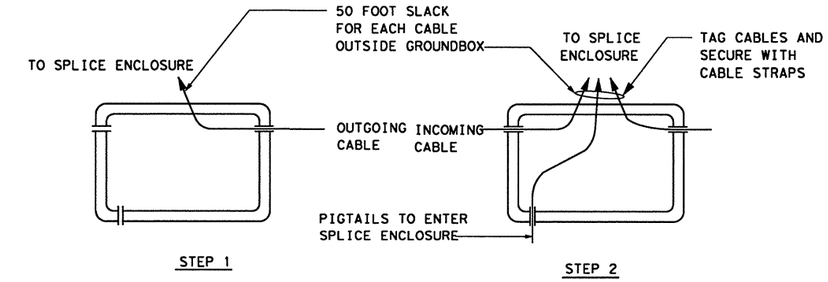

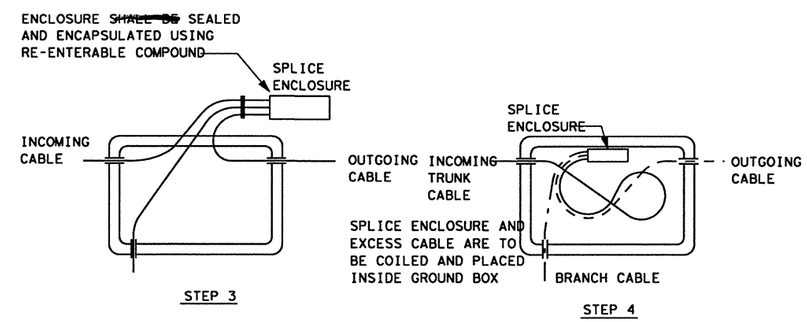

SPLICE PROCEDURE

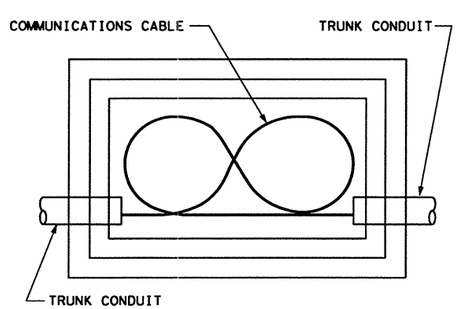

TYPE '1' OR TYPE '2' GROUND BOX NO SPLICE

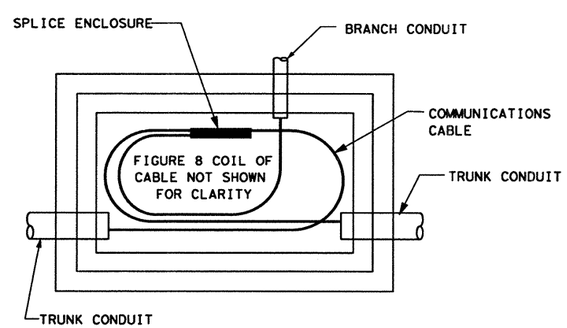

TYPE '2' GROUND BOX WITH SPLICE

NOTES:

1. UPON ACCEPTANCE OF WORK, ALL CONDUITS ~~SHALL BE~~ SEALED WITH COMPATIBLE SEALANT MATERIAL.
2. ALL CABLE STRAPS ~~SHALL BE~~ DESIGNED TO WITHSTAND ULTRA-VIOLET EXPOSURE.
3. THE BOX ~~SHALL BE~~ CAULKED AFTER ALL KNOWN ENTRANCES HAVE BEEN MADE.
4. THE BOX SHALL HAVE INTEGRAL BASE OR ~~SHALL BE~~ GROUTED PER GROUNDBOX DETAIL SHEET.
5. DRAINAGE ~~SHALL BE~~ AS SHOWN PER GROUNDBOX DETAIL SHEET.
6. ALL FIBER OPTIC SPLICE CLOSURES ~~SHALL BE~~ INSTALLED WITHIN GROUND BOX.
7. CONCRETE ENCASEMENT RING DIMENSION '1' ~~TO BE~~ EQUAL TO DESIGN PAVEMENT DEPTH.
8. PAVEMENT AND SUBGRADE ~~TO BE~~ AS DIRECTED BY THE ENGINEER.
9. FIBER OPTIC CABLE ~~SHALL NOT BE~~ CUT AT SPLICE LOCATIONS. CABLE ~~SHALL~~ CONTINUE THROUGH GROUND BOX. SELECTIVELY SPLICING ONLY THE REQUIRED FIBERS AT THAT LOCATION.
10. FULL CABLE CUTS ~~SHALL BE~~ APPROVED BY THE ENGINEER.

STATE OF TEXAS
DANNY MAGEE
83653
LICENSED
PROFESSIONAL ENGINEER

The seal appearing on this document was authorized by DANNY MAGEE PE 83653, on MAY 1, 2003.

©2003 Texas Department of Transportation

IH 35
LOOP 20 TO UNIROYAL ROAD

ITS
GENERAL DETAILS
FIBER OPTIC SPLICE

SHEET 1 OF 1

FED RD DIV NO	FEDERAL AID PROJECT NO		SHEET NO
6	NH-2002 (79)		734
STATE	STATE DIST		COUNTY
TEXAS	LAREDO		WEBB
CONT	SECT	JOB	HIGHWAY NO
0018	05	062, ETC	IH 35

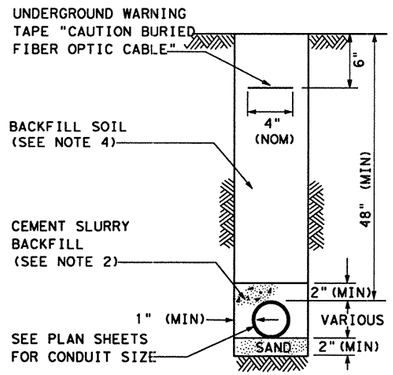

1 CONDUIT

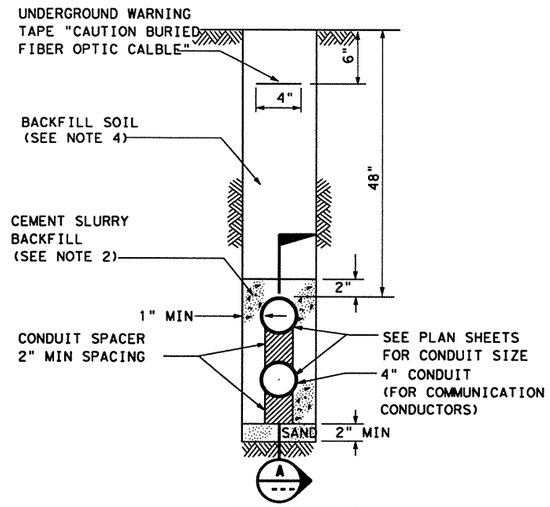

2 CONDUITS

TRENCH IN SOIL

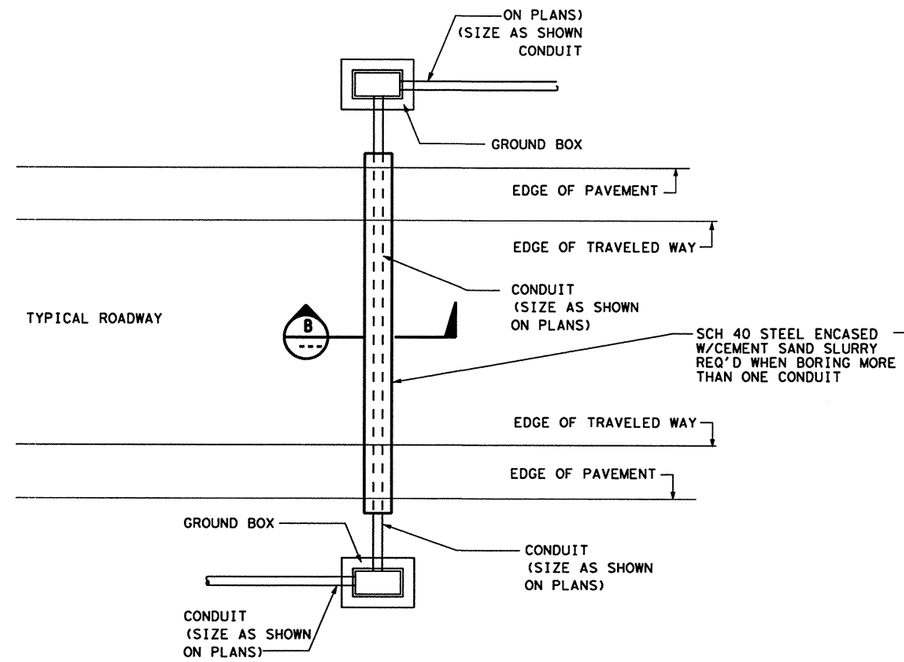

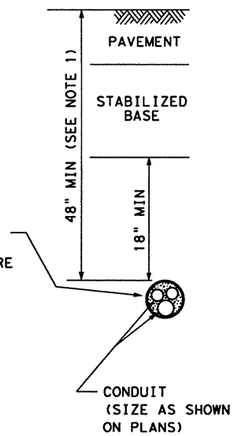

SECTION B

BORE UNDER PAVEMENT

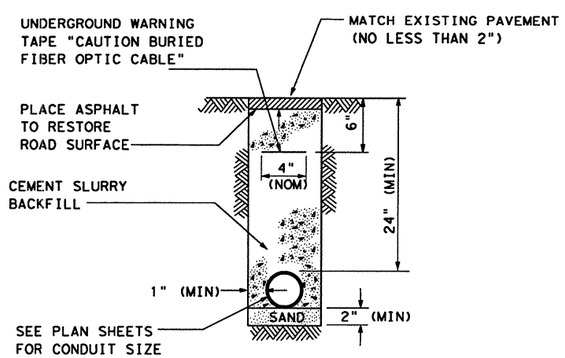

TRENCH IN PAVEMENT

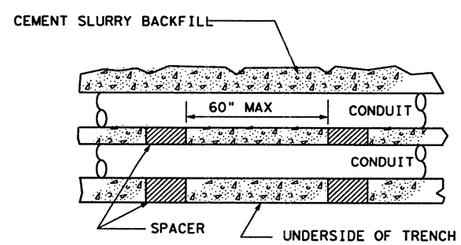

SECTION A

TYPICAL ELEVATION OF TRENCH

1. ALL CONDUITS ~~SHALL BE~~ MIN 48" BELOW FINISHED GRADE OR 18" BELOW STABILIZED BASE UNLESS NOTED OTHERWISE IN THE PLANS.
2. AT LOCATIONS WHERE IT IS DETERMINED BY THE ENGINEER THAT 48" OF COVER CAN NOT BE OBTAINED FOR TRENCHING IN SOIL, CEMENT SLURRY BACKFILL ~~SHALL BE~~ INSTALLED AS SHOWN.
3. ALL CONDUIT BENDS ~~SHALL BE~~ FACTORY BENDS.
4. TRENCH EXCAVTION AND BACK FILLING ~~SHALL BE~~ IN ACCORDANCE WITH ITEM 400, "EXCAVATION AND BACKFILL FOR STRUCTURES".

STATE OF TEXAS
DANNY MAGEE
83653
PROFESSIONAL ENGINEER

The seal appearing on this document was authorized by DANNY MAGEE PE 83653, on MAY 1, 2003.

©2003 Texas Department of Transportation

IH 35
LOOP 20 TO UNIROYAL ROAD

ITS
GENERAL DETAILS
TRENCHING

SHEET 1 OF 1

FED RD DIV NO	FEDERAL AID PROJECT NO		SHEET NO
6	NH-2002 (79)		735
STATE	STATE DIST		COUNTY
TEXAS	LAREDO		WEBB
CONT	SECT	JOB	HIGHWAY NO
0018	05	062, ETC	IH 35

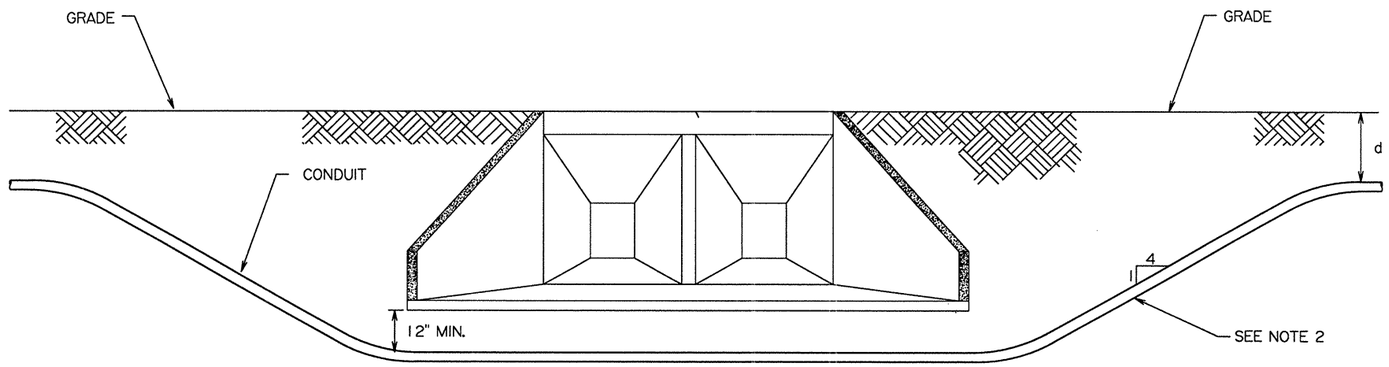

ELEVATION

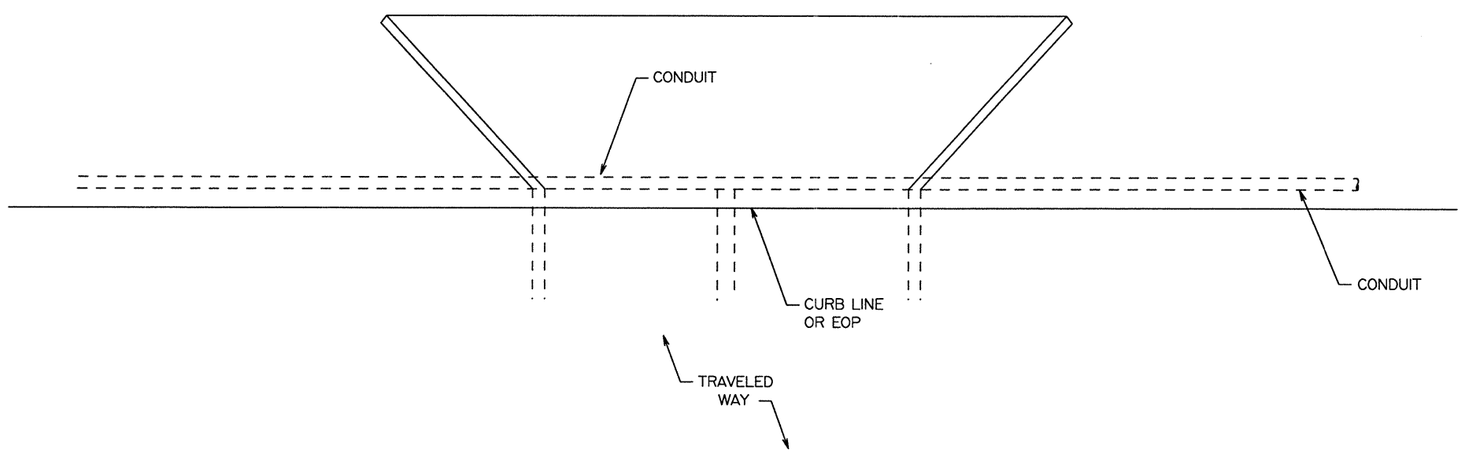

PLAN

NOTES:

1. SEE LAYOUT SHEETS FOR CONDUIT DIAMETERS.
2. WHEN NOT SPECIFIED IN THE "TYPICAL SECTION & SYSTEM OVERVIEW SHEET", THE TRENCH DEPTH , d, SHALL BE 24 INCHES WHEN PLACING COPPER COMMUNICATION CABLE IN CONDUIT AND 48 INCHES WHEN PLACING FIBER OPTIC COMMUNICATION CABLE IN CONDUIT.
3. THE RISE : RUN RATIO OF CONDUIT THROUGH INCREASES OR DECREASES IN ELEVATION WILL NOT EXCEED 1 : 4.

STATE OF TEXAS
DANNY MAGEE
83653
REGISTERED PROFESSIONAL ENGINEER

The seal appearing on this document was authorized by DANNY MAGEE PE 83653, on MAY 1, 2003.

©2003 Texas Department of Transportation

IH 35
LOOP 20 TO UNIROYAL ROAD

ITS
TMC DETAILS
CONDUIT PLACEMENT

NOT TO SCALE

SHEET 1 OF 1

FED RD DIV NO	FEDERAL AID PROJECT NO		SHEET NO
6	NH-2002 (79)		736
STATE	STATE DIST		COUNTY
TEXAS	LAREDO		WEBB
CONT	SECT	JOB	HIGHWAY NO
0018	05	062, ETC	IH 35

2003/ITS/PROJECT/WEB/0018-05-062IH35WIDEN/IH35WIDENCAD; FILE NAME: B60 COND UNDER CULVERT.DGN

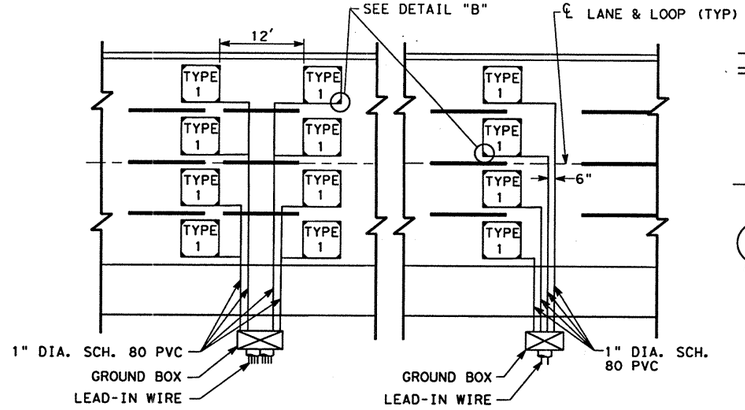

NOTE: SEE LAYOUT FOR LOCATION OF GROUND BOX, PLACEMENT ~~MAY BE~~ ON ROADWAY SHOULDER OR OUTSIDE OF SHOULDER.

TRAP LOOPS NON-TRAP LOOPS

TYPICAL LOOP DETECTOR LAYOUT

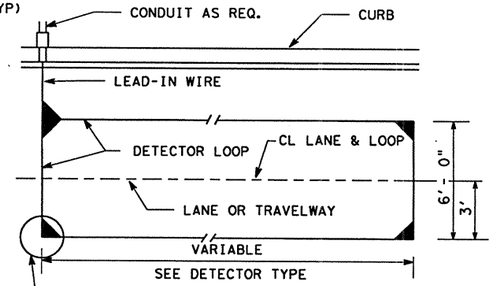

TYPICAL LOOP LAYOUT

(UNLESS OTHERWISE NOTED)

NOTES:

1. WIRE FOR LOOPS ~~SHALL BE~~ #14XHHW STRANDED AS DESCRIBED IN THE NATIONAL ELECTRICAL CODE.
2. THE LOOP WIRE ~~SHALL BE~~ HELD IN PLACE EVERY TWO FEET WITH SHORT STRIPS OF RUBBER OR NEOPRENE FLEXIBLE TUBING OR POLYETHYLENE FOAM SEALANT BACKER APPROXIMATELY ONE INCH IN LENGTH. THESE STRIPS SHALL BE LEFT IN PLACE AND THE SLOT FILLED WITH LOOP SEALER.
3. PAYMENT FOR LOOP DETECTORS ~~SHALL~~ INCLUDE LOOP CONDUCTOR WIRE FROM EDGE OF ROADWAY TO SPLICE IN GROUND BOX.
4. SEALING COMPOUND ~~SHALL~~ MEET REQUIREMENTS FOR SPECIAL SPECIFICATION 6003.
5. SPLICE BETWEEN LEAD-IN CONDUCTORS AND THE LOOP WIRE ~~SHALL BE~~ MADE IN A GROUND BOX BY SOLDERING. THE SPLICE ~~SHALL BE~~ COMPLETELY WATERPROOF AND ~~SHALL BE~~ COMPLETELY ENCAPUSLATED WITHIN A SCOTCHCAST 82-A OR SCOTCHCAST 82-A1 SPLICE ENCLOSURE.
6. DETECTOR LEAD-IN CABLE ~~SHALL BE~~ SHIELDED, STRANDED, XHHW, SIZE 12 AWG
7. THE PAVEMENT CUT ~~SHALL BE~~ MADE WITH A CONCRETE SAW TO NEAT LINES AND LOOSE MATERIAL REMOVED. THE CUT ~~SHALL BE~~ CLEAN AND DRY WHEN THE SEALING COMPOUND IS PLACED.
8. THREE(3) FEET MIN. OF LOOP WIRE IS ~~TO BE~~ COILED IN THE PULL BOX IN HOV ROADWAY TO ALLOW FOR SPLICING TO SHIELDED CABLE.
9. THE LOOP WIRE ~~SHALL BE~~ PLACED IN A BLACK FLEXIBLE VINYL OR POLYETHYLENE TUBING OF .184 INCH MINIMUM I.D., .031 INCH MINIMUM WALL THICKNESS AND .26 MINIMUM O.D., HAVING A SMOOTH BORE. THE TUBING ~~SHALL~~ NOT ADHERE TO THE LOOP WIRE IN ANY WAY AND SHALL RESIST DETERIORATION FROM OILS, SOLVENTS, AND TEMPERATURES UP TO 100° C. THE TUBING ~~SHALL~~ ALSO BE HIGHLY ABRASION RESISTANT AND REMAIN FLEXIBLE FROM -30° C TO 100 C.
10. CONDUIT FROM EDGE OF ROADWAY TO GROUND BOX ~~SHALL BE~~ CONSIDERED INCIDENTAL TO THE ITEM DETECTOR LOOP OF THE VARIOUS TYPES.
11. LONGER LOOP LEAD-IN LENGTH REQUIRES USE OF MORE TURNS IN LOOP. (SEE LOOP LEAD-IN LENGTH CHART).
12. LEADING AND TRAILING EDGE OF LOOPS ~~SHALL BE~~ LOCATED BY CONTRACTOR DURING SPEED CALIBRATION TEST.

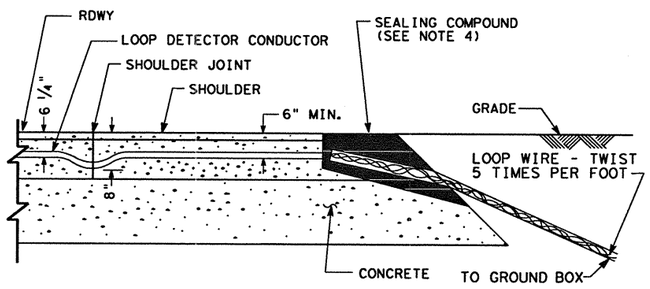

TYPICAL SECTION OF PAVEMENT CUT FOR LOOP DETECTORS (WITHOUT CURB)

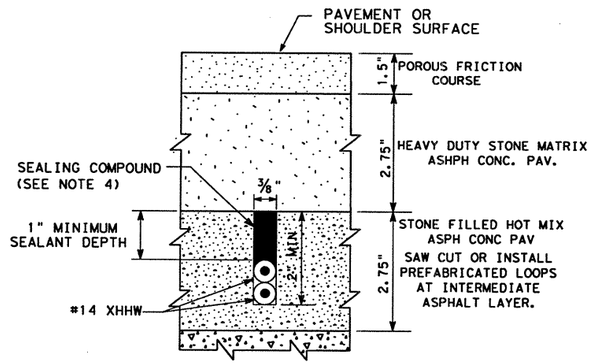

TYPICAL SECTION OF PAVEMENT CUT FOR LOOP DETECTORS

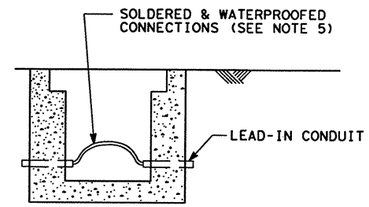

GROUND BOX CONNECTION (TYPICAL DETAIL)

LEAD-IN LENGTH CHART

LEAD-IN CABLE LENGTH (FEET)	NUMBER OF TURNS REQUIRED IN LOOP
1-400	3
401-800	4
801-1200	5
1201-1500	6

LOOP SIZE

TYPE 1 - 6' X 6'
TYPE 11 - 6' X 12'
TYPE 111 - 6'X 24'
TYPE 1V - 6' X 40'

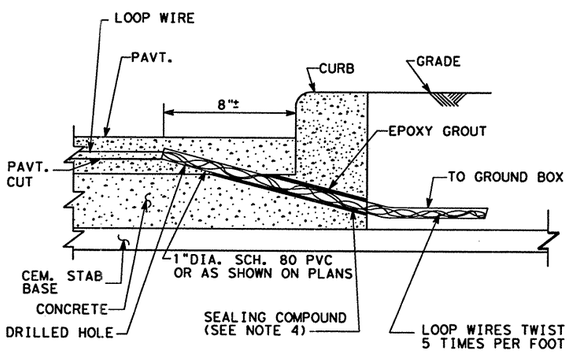

TYPICAL INSTALLATION OF LOOP DETECTORS (WITH CURB)

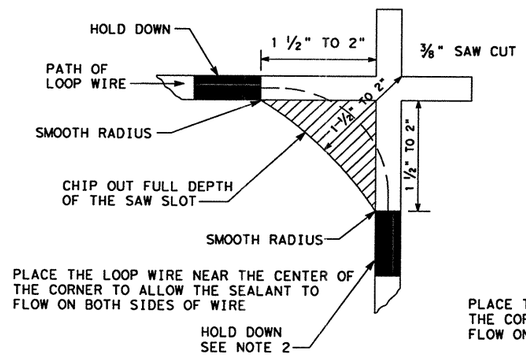

CHIPPED OUT CORNER

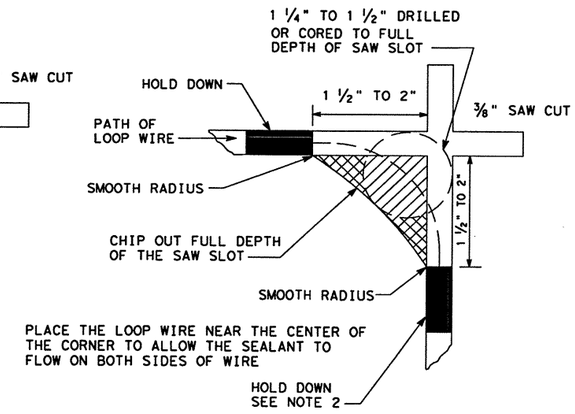

CORE CORNER

DETAIL B - CORNER DETAILS

STATE OF TEXAS
DANNY MAGEE
83653
PROFESSIONAL ENGINEER

The seal appearing on this document was authorized by DANNY MAGEE PE 83653, on MAY 19, 2003

©2003 Texas Department of Transportation

IH 35
LOOP 20 TO UNIROYAL ROAD

ITS
LOOPS
INSTALLATION DETAILS

SHEET 1 OF 1

FED RD DIV NO	FEDERAL AID PROJECT NO		SHEET NO
6	NH-2002 (79)		737
STATE	STATE DIST		COUNTY
TEXAS	LAREDO		WEBB
CONT	SECT	JOB	HIGHWAY NO
0018	05	062, ETC	IH 35

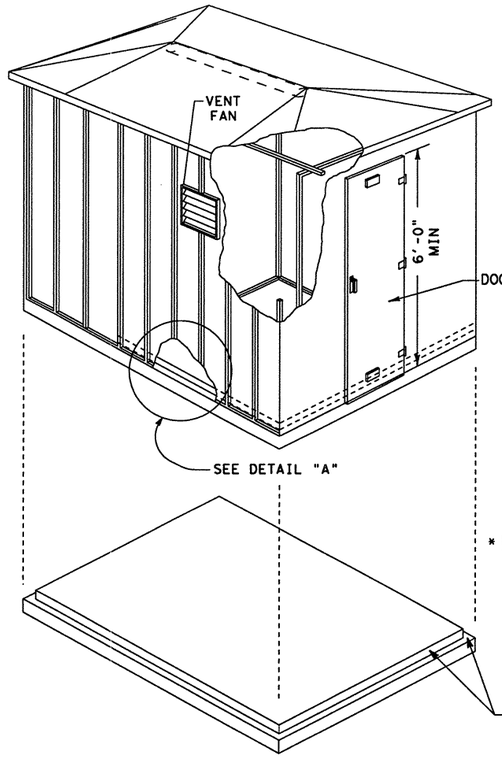

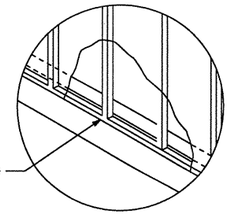

DETAIL "A"

* BUILDING/PAD JOINT ~~SHALL BE~~ COMPLETELY CAULKED TO PREVENT THE ENTRY OF WATER.

HUB BUILDING FOUNDATION ISOMETRIC VIEW

SCALE 1" = 4'- 0"

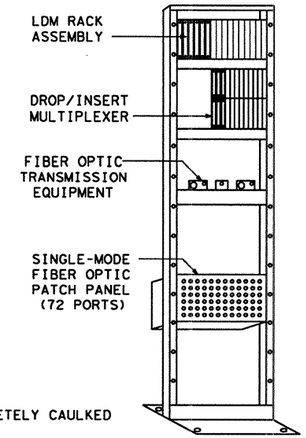

RACK MOUNTED EQUIPMENT LAYOUT

19" OPEN FRAME RACK

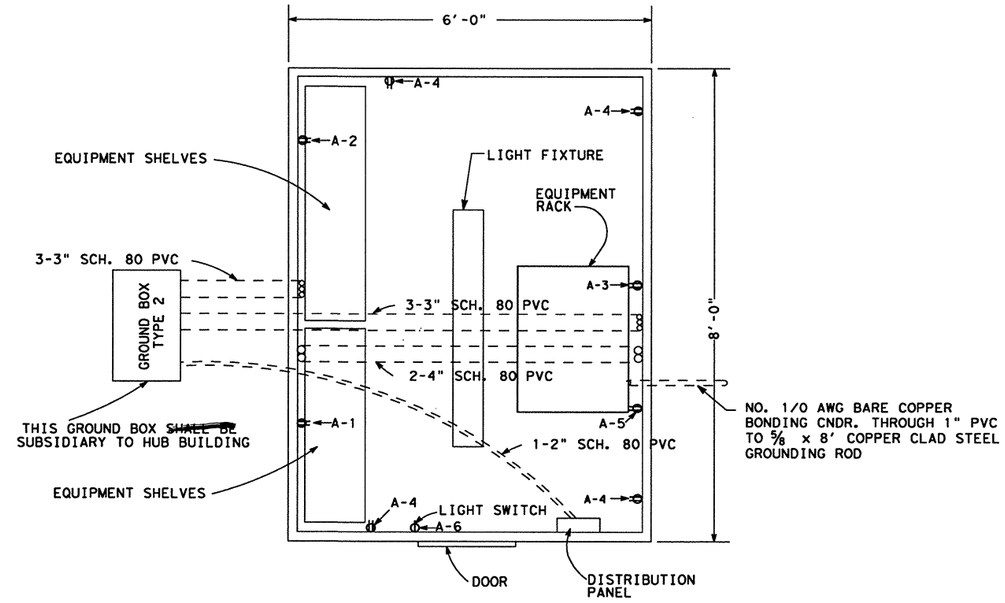

HUB BUILDING EQUIPMENT

NOT TO SCALE

THE DIMENSIONS FOR THE FOUNDATION CHANNEL ~~SHALL BE~~ ACCORDING TO HUB BUILDING MANUFACTURERS INSTRUCTIONS

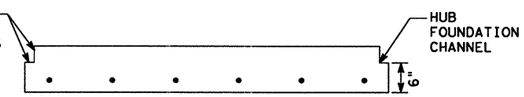

SECTION A-A

BRANCH BREAKERS:

A-1	20 AMP	ONE POLE
A-2	20 AMP	ONE POLE
A-3	20 AMP	ONE POLE
A-4	20 AMP	ONE POLE GFC1
A-5	20 AMP	ONE POLE
A-6	15 AMP	ONE POLE

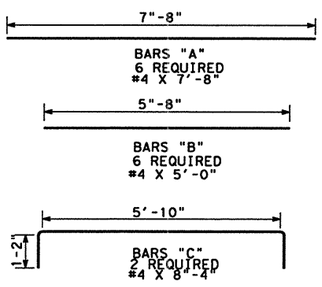

REBAR DETAIL

NOT TO SCALE

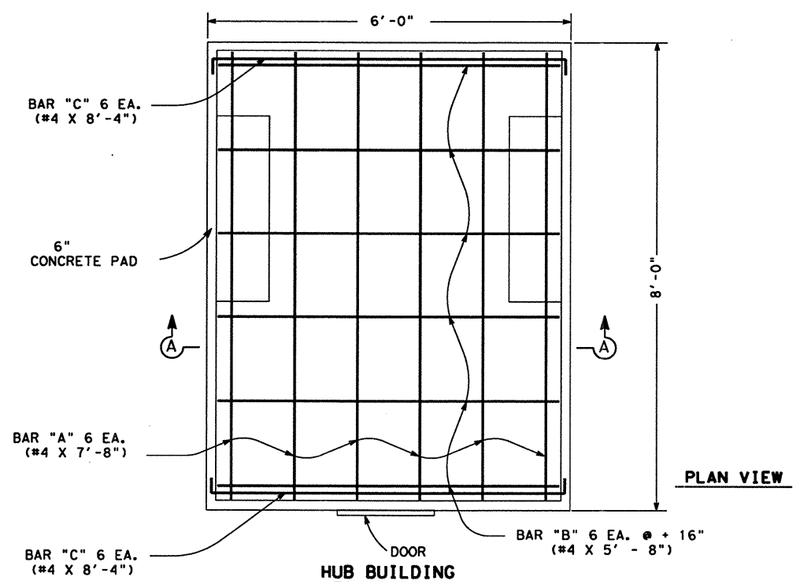

PLAN VIEW

HUB BUILDING FOUNDATION

NOT TO SCALE

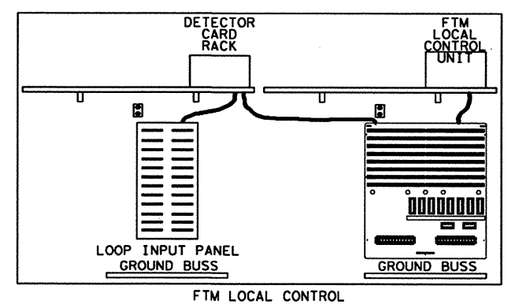

FTM LOCAL CONTROL UNIT PANEL

SHELF MOUNTED EQUIPMENT LAYOUT

STATE OF TEXAS
DANNY MAGEE
83653
PROFESSIONAL ENGINEER

The seal appearing on this document was authorized by DANNY MAGEE PE 83653, on MAY 1, 2003.

©2003 Texas Department of Transportation

IH 35
LOOP 20 TO UNIROYAL ROAD

ITS
INSTALLATION DETAILS
COMMUNICATION HUB BUILDING

SHEET 1 OF 1

FED RD DIV NO	FEDERAL AID PROJECT NO		SHEET NO
6	NH-2002 (79)		738
STATE	STATE DIST		COUNTY
TEXAS	LAREDO		WEBB
CONT	SECT	JOB	HIGHWAY NO
0018	05	062, ETC	IH 35

2003/ITS/PROJECT/WEB/0018-05-062IH35WIDEN/IH35WIDENCAD; FILE NAME: B60 HUB BUILDING.DGN

CABINET AS REQUIRED
SEE LAYOUT SHEETS FOR TYPE AND LOCATION

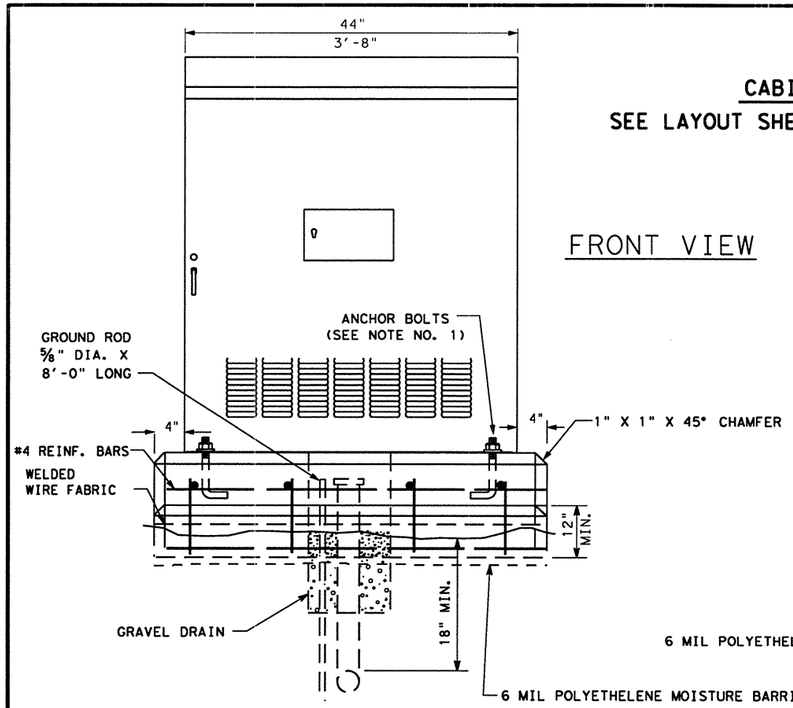

FRONT VIEW

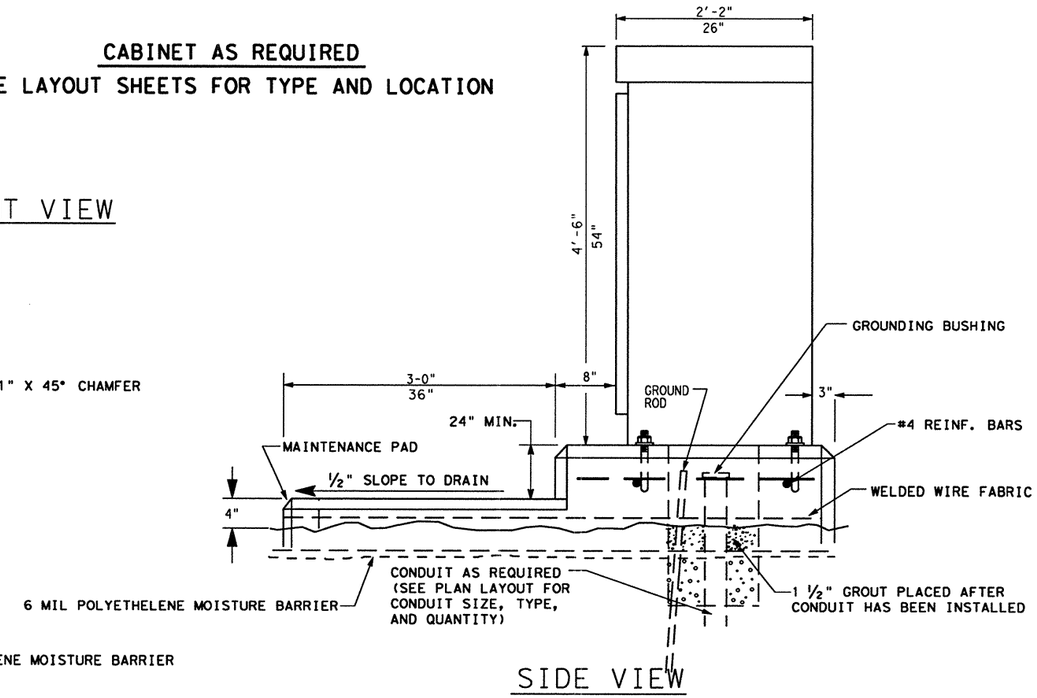

SIDE VIEW

NOTES:

1. DETAILS OF ANCHOR BOLT LOCATION ~~TO BE~~ FURNISHED BY THE CABINET MANUFACTURER.
2. DIMENSIONS SHOWN FOR CONCRETE BASE ~~SHALL BE~~ SUBJECT TO MODIFICATION TO FIT REQUIRED CABINET TYPE.
3. CABINET FOUNDATION SHALL HAVE GRAVEL DRAIN.
4. ALL CONCRETE ~~TO BE~~ CLASS "A".
5. THE CONTRACTOR IS TO SET THE CABINET FOUNDATION LEVEL WITH THE PAVEMENT SURFACE OR AS APPROVED BY THE ENGINEER.
6. THE CONTRACTOR ~~SHALL~~ FURNISH ANY ADDITIONAL CONCRETE WHICH MAY BE NECESSARY TO STABILIZE FOUNDATION AT UNUSUAL LOCATIONS.
7. FOUNDATION AND GROUND BOX TYPE 1 ~~SHALL BE~~ CONSIDERED INCIDENTAL TO THE ITEM "CABINET".
8. GROUND CABINET AS REQUIRED IN CABINET SPECIFICATIONS AND AS PER NEC.
9. CABINET FOUNDATION ~~SHALL BE~~ TREATED WITH MOISTURE SEALANT.

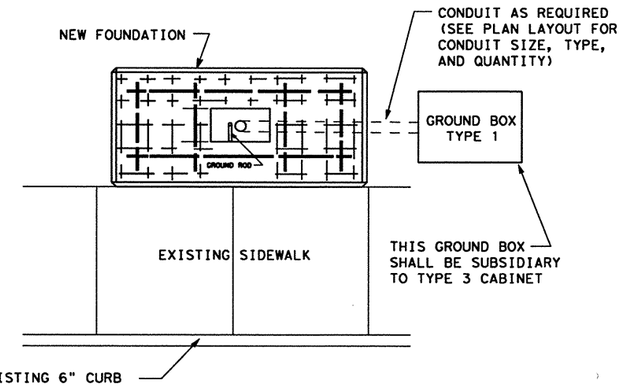

PLAN

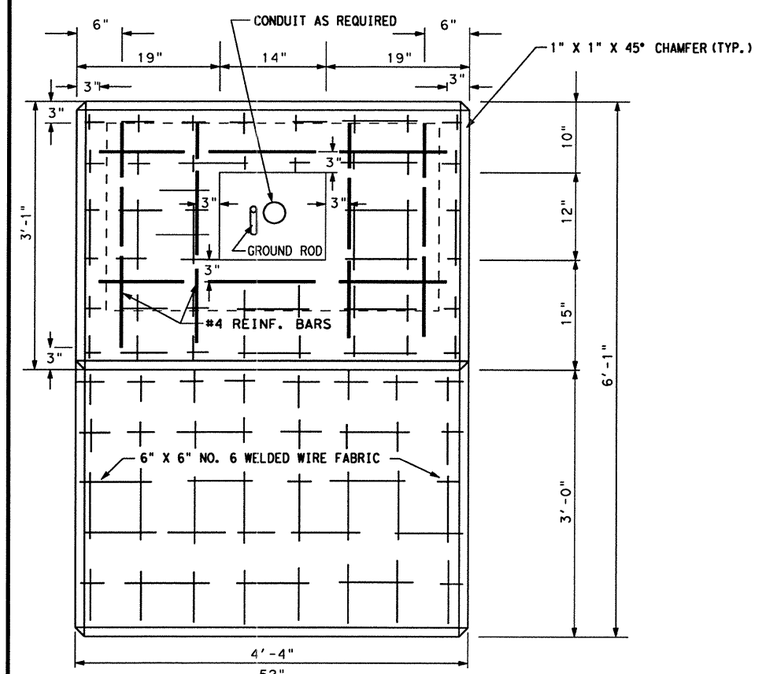

TOP VIEW

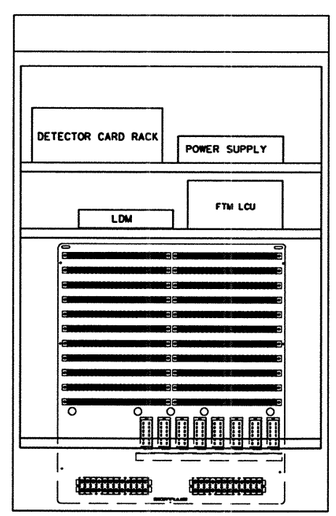

CABINET LAYOUT
(TYPE 3)

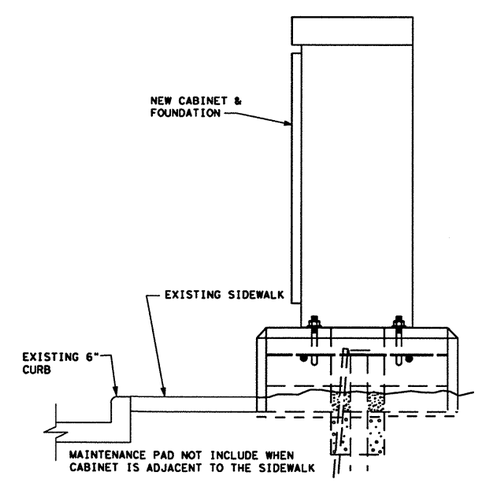

ELEVATION

STATE OF TEXAS
DANNY MAGEE
83653
REGISTERED
PROFESSIONAL ENGINEER

The seal appearing on this document was authorized by DANNY MAGEE PE 83653, on MAY 1, 2003.

©2003 Texas Department of Transportation

IH 35
LOOP 20 TO UNIROYAL ROAD

ITS
TYPE 3 CABINET

SHEET 1 OF 1

FED RD DIV NO	FEDERAL AID PROJECT NO		SHEET NO
6	NH-2002 (79)		739
STATE	STATE DIST		COUNTY
TEXAS	LAREDO		WEBB
CONT	SECT	JOB	HIGHWAY NO
0018	05	062, ETC	IH 35

2003/ITS/PROJECT/WEB/0018-05-062IH35WIDEN/IH35WIDENCAD; FILE NAME: B60 TYPE 3 CAB.DGN

NOTES:

THE LANE CONTROL SIGNAL MOUNTING BRACKET, RIGID METAL CONDUIT AND FITTINGS ~~SHALL BE~~ GALVANIZED IN ACCORDANCE WITH ITEM 442 "METAL FOR STRUCTURES". AFTER INSTALLATION OF LANE CONTROL SIGNAL ALL ABRASIONS TO THE ASSEMBLY ~~SHALL BE~~ COATED WITH TWO COATS OF ZINC RICH PAINT, AS APPROVED BY THE ENGINEER. FABRICATION AND INSTALLATION OF LANE CONTROL SIGNAL BRACKET AND ANY ADDITIONAL WALKWAY BRACKET(S 4X7.7) REQUIRED TO SUPPORT THE LANE CONTROL SIGNAL ~~WILL NOT BE~~ PAID FOR DIRECTLY BUT WILL BE CONSIDERED INCIDENTAL TO THE ITEM "FTM LANE CONTROL SIGNAL FIELD EQUIPMENT". RIGID METAL CONDUIT , LIQUIDTIGHT FLEXIBLE METALLIC CONDUIT, FITTINGS, CLAMPS AND ALL MISCELLANEOUS HARDWARE WILL NOT BE PAID FOR DIRECTLY BUT WILL BE CONSIDERED INCIDENTAL TO THE ITEM "FTM LANE CONTROL SIGNAL FIELD EQUIPMENT".
THE CONTRACTOR SHALL FIELD VERIFY EXISTING CONDITIONS PRIOR TO FABRICATION OF THE ASSEMBLY.

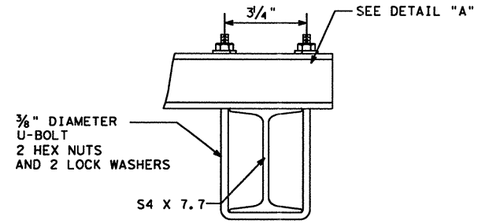

DETAIL 'A'
U - BOLT CONNECTION

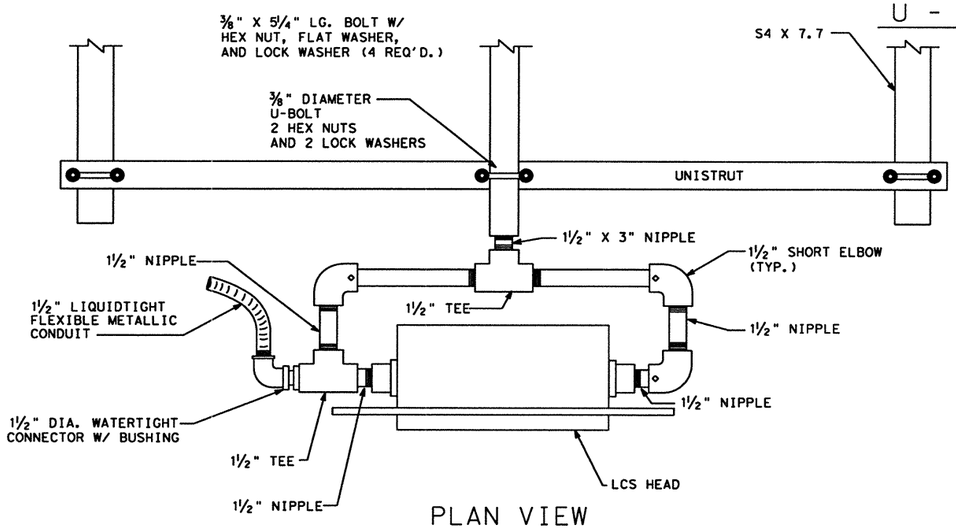

PLAN VIEW
(LIGHT CHANNELS NOT SHOWN)

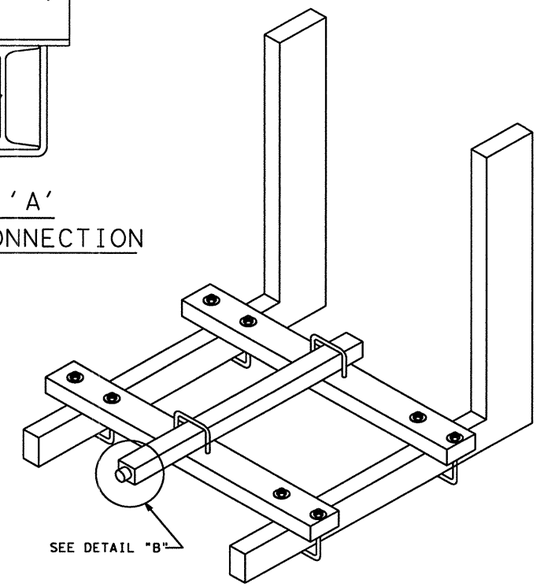

SIGNAL MOUNTING
BRACKET

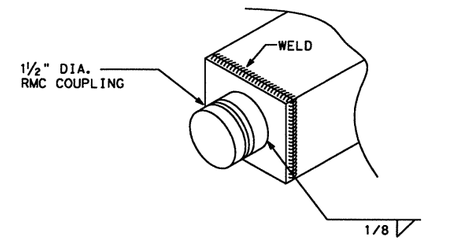

FRONT PLATE COUPLING
DETAIL 'B'

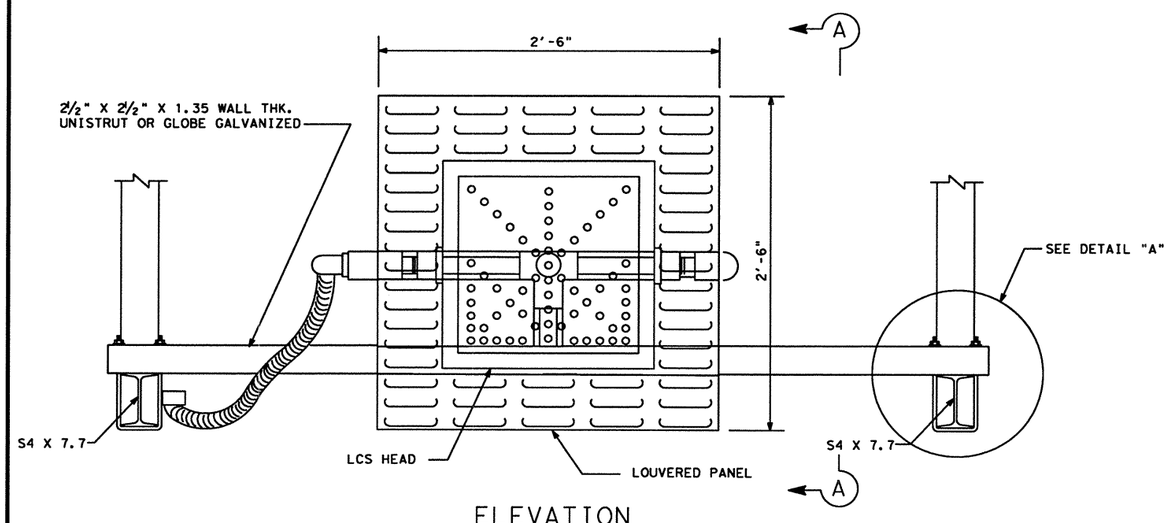

ELEVATION
(LIGHT CHANNELS NOT SHOWN)

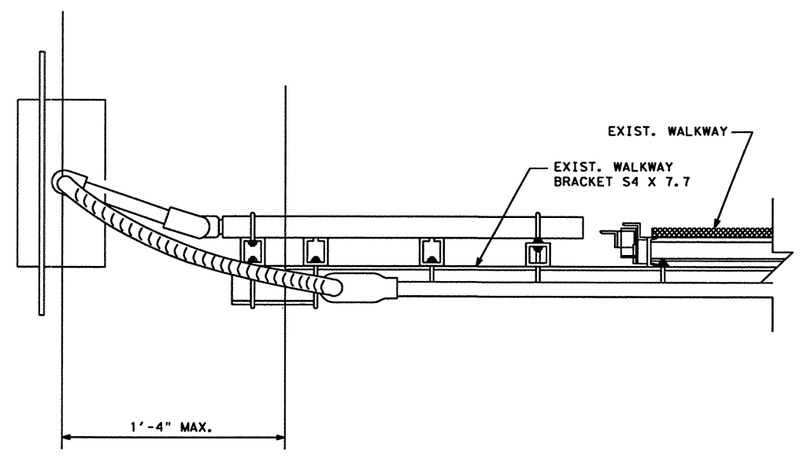

SECTION A-A

STATE OF TEXAS
DANNY MAGEE
83653
REGISTERED
PROFESSIONAL ENGINEER

The seal appearing on this document was authorized by DANNY MAGEE PE 83653, on MAY 1, 2003.

©2003 Texas Department of Transportation

IH 35
LOOP 20 TO UNIROYAL ROAD

ITS
LANE CONTROL SIGNALS
(LCS)
STRUCTURAL DETAILS

SHEET 1 OF 1

FED RD DIV NO	FEDERAL AID PROJECT NO		SHEET NO
6	NH-2002 (79)		740
STATE	STATE DIST		COUNTY
TEXAS	LAREDO		WEBB
CONT	SECT	JOB	HIGHWAY NO
0018	05	062, ETC	IH 35

2003/ITS/PROJECT/WEB/0018-05-062IH35WIDEN/IH35WIDENCAD; FILE NAME: B60 LCS.DGN

1. Drill and epoxy anchor bolts 7 1/2" into concrete in accordance with Item 420.4.G.10. Required pull out strength of anchor bolts shall be 15,000 lbs per bolt.
2. No mechanical attachment of bearing plate to web. Adjust strut length to provide snug fit.

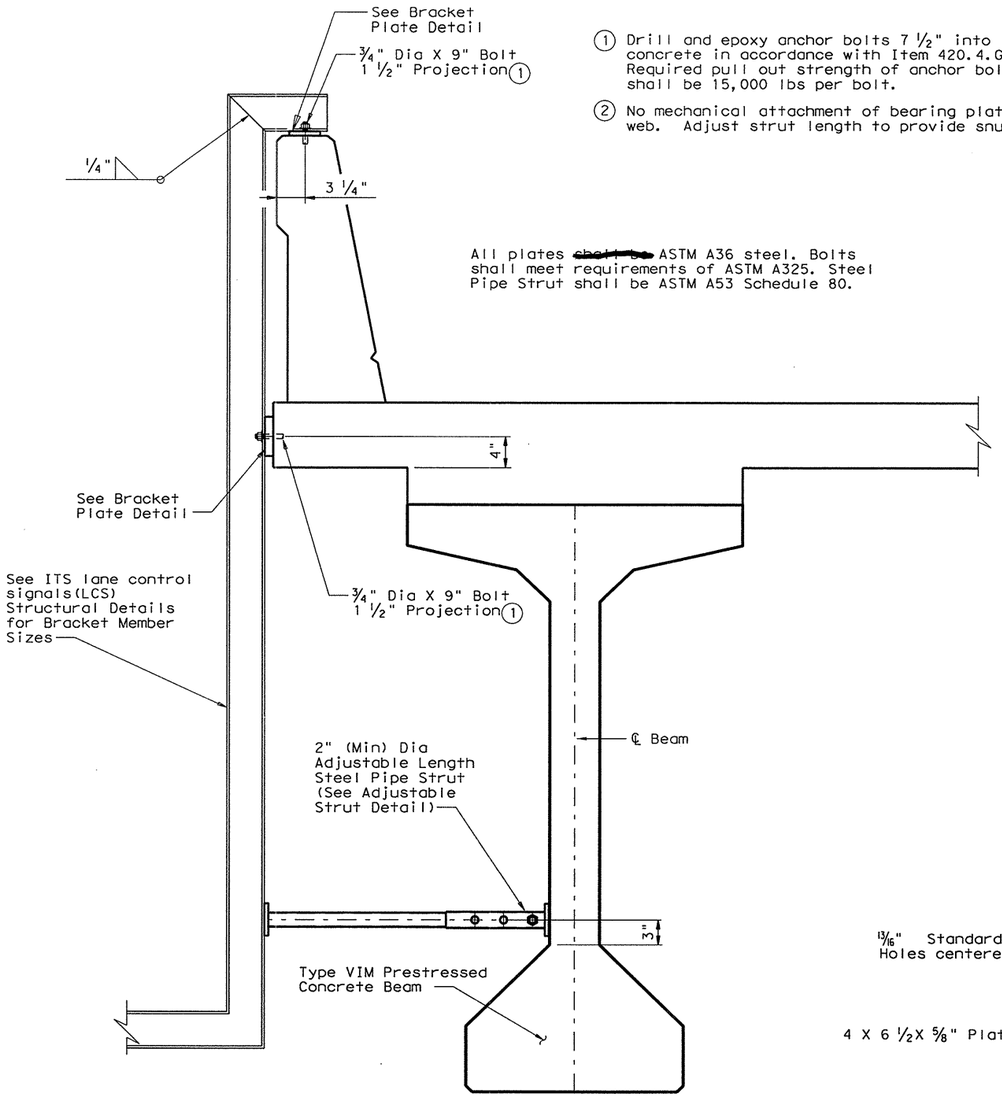

SUPPORT MOUNTING DETAIL

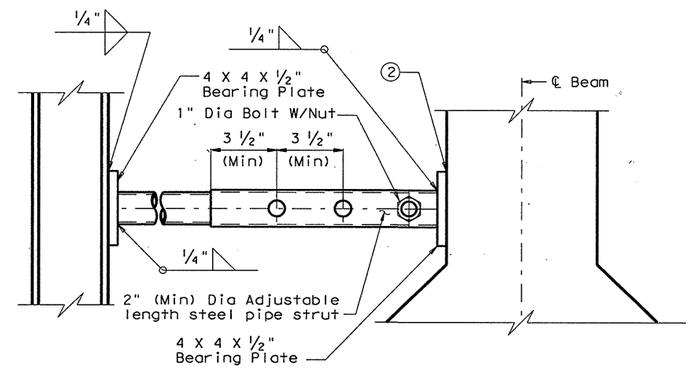

ADJUSTABLE STRUT DETAIL

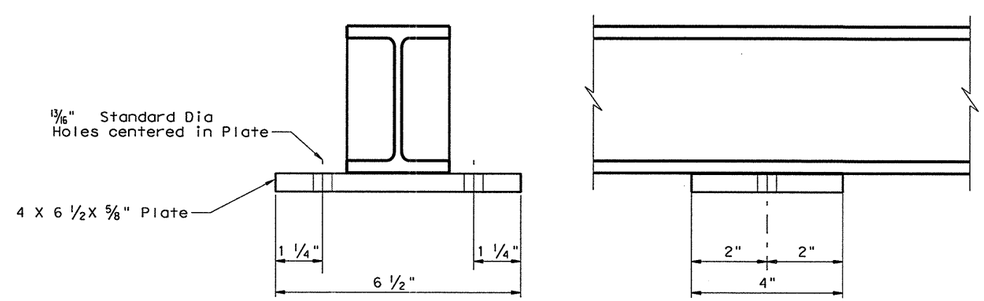

BRACKET PLATE DETAIL

STATE OF TEXAS
DACIO MARIN III
65549
REGISTERED PROFESSIONAL ENGINEER

Dacio Marin III
27 MAY 2008

Texas Department of Transportation
Bridge Division

LCS BEAM ATTACHMENT DETAILS

TRES EQUIS BLVD AND CARRIER DR. UNDERPASS

FILE: sp35301.dgn	DN: GPT	CK: DM	DW: WMB	CK: GPT	
© TxDOT MAY, 2008	DISTRICT	FEDERAL AID PROJECT			SHEET
REVISIONS	LRD				74/01
	COUNTY		CONTROL	SECT	JOB	HIGHWAY
	WEBB		0018	05	062	IH35

LCU				CABINET	
CONN	PIN	PORT	BIT	TEST POINT	SIGNAL DESCRIPTION
I/O-1A	1	0	0		INTERNAL CONFIRM
I/O-1A	2	0	1	TB1-2	FREEWAY CABINET DOOR OPEN CONFIRM
I/O-1A	3	0	2	TB1-3	LCS ON-LINE CONFIRM
I/O-1A	4	0	3	TB1-4	LCS LOCAL CONTROL CONFIRM
I/O-1A	5	0	4	TB1-5	SPARE INPUT 1
I/O-1A	6	0	5	TB1-6	SPARE INPUT 2
I/O-1A	7	0	6	TB1-7	SPARE INPUT 3
I/O-1A	8	0	7	TB1-8	SPARE INPUT 4
I/O-1A	9	1	0	TB1-9	LCS 1 GREEN ARROW CONFIRM
I/O-1A	10	1	1	TB1-10	LCS 1 YELLOW X CONFIRM
I/O-1A	11	1	2	TB1-11	LCS 1 YELLOW ARROW CONFIRM
I/O-1A	12	1	3	TB1-12	LCS 1 RED X CONFIRM
I/O-1A	13	1	4	TB1-13	LCS 2 GREEN ARROW CONFIRM
I/O-1A	14	1	5	TB1-14	LCS 2 YELLOW X CONFIRM
I/O-1A	15	1	6	TB1-15	LCS 2 YELLOW ARROW CONFIRM
I/O-1A	16	1	7	TB1-16	LCS 2 RED X CONFIRM
I/O-1A	17	2	0	TB1-17	LCS 3 GREEN ARROW CONFIRM
I/O-1A	18	2	1	TB1-18	LCS 3 YELLOW X CONFIRM
I/O-1A	19	2	2	TB1-19	LCS 3 YELLOW ARROW CONFIRM
I/O-1A	20	2	3	TB1-20	LCS 3 RED X CONFIRM
I/O-1A	21	2	4	TB1-21	LCS 4 GREEN ARROW CONFIRM
I/O-1A	22	2	5	TB1-22	LCS 4 YELLOW X CONFIRM
I/O-1A	23	2	6	TB1-23	LCS 4 YELLOW ARROW CONFIRM
I/O-1A	24	2	7	TB1-24	LCS 4 RED X CONFIRM
	25				NO CONNECTION
I/O-1B	26	4	0	TB2-1	LCS 5 GREEN ARROW CONFIRM
I/O-1B	27	4	1	TB2-2	LCS 5 YELLOW X CONFIRM
I/O-1B	28	4	2	TB2-3	LCS 5 YELLOW ARROW CONFIRM
I/O-1B	29	4	3	TB2-4	LCS 5 RED X CONFIRM
I/O-1B	30	4	4	TB2-5	LCS 6 GREEN ARROW CONFIRM
I/O-1B	31	4	5	TB2-6	LCS 6 YELLOW X CONFIRM
I/O-1B	32	4	6	TB2-7	LCS 6 YELLOW ARROW CONFIRM
I/O-1B	33	4	7	TB2-8	LCS 6 RED X CONFIRM
I/O-1B	34	5	0	TB2-9	DYNAMIC SIGN 1 ON/OFF CONFIRM
I/O-1B	35	5	1	TB2-10	DYNAMIC SIGN 2 ON/OFF CONFIRM
I/O-1B	36	5	2	TB2-11	DYNAMIC SIGN 3 ON/OFF CONFIRM
I/O-1B	37	5	3	TB2-12	DYNAMIC SIGN 4 ON/OFF CONFIRM
I/O-1B	38	5	4	TB2-13	DYNAMIC SIGN 1 LOCAL CONTROL CONFIRM
I/O-1B	39	5	5	TB2-14	DYNAMIC SIGN 2 LOCAL CONTROL CONFIRM
I/O-1B	40	5	6	TB2-15	DYNAMIC SIGN 3 LOCAL CONTROL CONFIRM
I/O-1B	41	5	7	TB2-16	DYNAMIC SIGN 4 LOCAL CONTROL CONFIRM
I/O-1B	42	6	0	TB2-17	GATE 1 OPEN CONFIRM
I/O-1B	43	6	1	TB2-18	GATE 1 CLOSED CONFIRM
I/O-1B	44	6	2	TB2-19	GATE 2 OPEN CONFIRM
I/O-1B	45	6	3	TB2-20	GATE 2 CLOSED CONFIRM
I/O-1B	46	6	4	TB2-21	GATE 1 LOCAL CONTROL CONFIRM
I/O-1B	47	6	5	TB2-22	GATE 2 LOCAL CONTROL CONFIRM
I/O-1B	48	6	6	TB2-23	SPARE INPUT 5
I/O-1B	49	6	7	TB2-24	SPARE INPUT 6
	50				NO CONNECTION
	51				NO CONNECTION
	52				24 V DC INTERNALLY FROM LCU PWR-7
	53				24 V DC GROUND INTERNALLY FROM LCU PWR-8
	54				NO CONTACTOR PIN ON CABLE 1
	55				CONTACTOR PIN ONLY ON CABLE 1
	56				CONTACTOR PIN ONLY ON CABLE 1
	57				CONTACTOR PIN ONLY ON CABLE 1

CABLE CONNECTOR IS AMP 206437-1 WITH AMP 205202-7 PIN CONTACTS

LCU				CABINET	
CONN	PIN	PORT	BIT	TEST POINT	SIGNAL DESCRIPTION
I/O-3A	1	10	0	TB4-13	NON-TRAP DETECTOR 1
I/O-3A	2	10	1	TB4-13A	NON-TRAP DETECTOR 2
I/O-3A	3	10	2	TB4-14	NON-TRAP DETECTOR 3
I/O-3A	4	10	3	TB4-14A	NON-TRAP DETECTOR 4
I/O-3A	5	10	4	TB4-15	NON-TRAP DETECTOR 5
I/O-3A	6	10	5	TB4-15A	NON-TRAP DETECTOR 6
I/O-3A	7	10	6	TB4-16	NON-TRAP DETECTOR 7
I/O-3A	8	10	7	TB4-16A	NON-TRAP DETECTOR 8
I/O-3A	9	11	0	TB4-17	NON-TRAP DETECTOR 9
I/O-3A	10	11	1	TB4-17A	NON-TRAP DETECTOR 10
I/O-3A	11	11	2	TB4-18	NON-TRAP DETECTOR 11
I/O-3A	12	11	3	TB4-18A	NON-TRAP DETECTOR 12
I/O-3A	13	11	4	TB4-19	NON-TRAP DETECTOR 13
I/O-3A	14	11	5	TB4-19A	NON-TRAP DETECTOR 14
I/O-3A	15	11	6	TB4-20	NON-TRAP DETECTOR 15
I/O-3A	16	11	7	TB4-20A	NON-TRAP DETECTOR 16
I/O-3A	17	12	0	TB4-21	NON-TRAP DETECTOR 17
I/O-3A	18	12	1	TB4-21A	NON-TRAP DETECTOR 18
I/O-3A	19	12	2	TB4-22	NON-TRAP DETECTOR 19
I/O-3A	20	12	3	TB4-22A	NON-TRAP DETECTOR 20
I/O-3A	21	12	4	TB4-23	NON-TRAP DETECTOR 21
I/O-3A	22	12	5	TB4-23A	NON-TRAP DETECTOR 22
I/O-3A	23	12	6	TB4-24	NON-TRAP DETECTOR 23
I/O-3A	24	12	7	TB4-24A	NON-TRAP DETECTOR 24
	25				NO CONNECTION
I/O-3B	26	40	0	TB5-1	LCS 1 GREEN ARROW COMMAND
I/O-3B	27	40	1	TB5-2	LCS 1 YELLOW X COMMAND
I/O-3B	28	40	2	TB5-3	LCS 1 YELLOW ARROW COMMAND
I/O-3B	29	40	3	TB5-4	LCS 1 RED X COMMAND
I/O-3B	30	40	4	TB5-5	LCS 2 GREEN ARROW COMMAND
I/O-3B	31	40	5	TB5-6	LCS 2 YELLOW X COMMAND
I/O-3B	32	40	6	TB5-7	LCS 2 YELLOW ARROW COMMAND
I/O-3B	33	40	7	TB5-8	LCS 2 RED X COMMAND
I/O-3B	34	41	0	TB5-9	LCS 3 GREEN ARROW COMMAND
I/O-3B	35	41	1	TB5-10	LCS 3 YELLOW X COMMAND
I/O-3B	36	41	2	TB5-11	LCS 3 YELLOW ARROW COMMAND
I/O-3B	37	41	3	TB5-12	LCS 3 RED X COMMAND
I/O-3B	38	41	4	TB5-13	LCS 4 GREEN ARROW COMMAND
I/O-3B	39	41	5	TB5-14	LCS 4 YELLOW X COMMAND
I/O-3B	40	41	6	TB5-15	LCS 4 YELLOW ARROW COMMAND
I/O-3B	41	41	7	TB5-16	LCS 4 RED X COMMAND
I/O-3B	42	42	0	TB5-17	LCS 5 GREEN ARROW COMMAND
I/O-3B	43	42	1	TB5-18	LCS 5 YELLOW X COMMAND
I/O-3B	44	42	2	TB5-19	LCS 5 YELLOW ARROW COMMAND
I/O-3B	45	42	3	TB5-20	LCS 5 RED X COMMAND
I/O-3B	46	42	4	TB5-21	LCS 6 GREEN ARROW COMMAND
I/O-3B	47	42	5	TB5-22	LCS 6 YELLOW X COMMAND
I/O-3B	48	42	6	TB5-23	LCS 6 YELLOW ARROW COMMAND
I/O-3B	49	42	7	TB5-24	LCS 6 RED X COMMAND
	50				NO CONNECTION
	51				NO CONNECTION
	52				24 V DC INTERNALLY FROM LCU PWR-7
	53				24 V DC GROUND INTERNALLY FROM LCU PWR-8
	54				CONTACTOR PIN ONLY ON CABLE 3
	55				CONTACTOR PIN ONLY ON CABLE 3
	56				NO CONTACTOR PIN ON CABLE 3
	57				CONTACTOR PIN ONLY ON CABLE 3

CABLE CONNECTOR IS AMP 206437-1 WITH AMP 205202-7 PIN CONTACTS

LCU				CABINET	
CONN	PIN	PORT	BIT	TEST POINT	SIGNAL DESCRIPTION
I/O-2A	1	8	0	TB3-1	RAMP 1 LEVEL O CONFIRM
I/O-2A	2	8	1	TB3-2	RAMP 1 LEVEL 1 CONFIRM
I/O-2A	3	8	2	TB3-3	RAMP 1 LEVEL 2 CONFIRM
I/O-2A	4	8	3	TB3-4	RAMP 1 ON-LINE CONFIRM
I/O-2A	5	8	4	TB3-5	RAMP 1 GREEN CONFIRM
I/O-2A	6	8	5	TB3-6	RAMP 1 FLASH CONFIRM
I/O-2A	7	8	6	TB3-7	RAMP 1 BYPASS GREEN CONFIRM
I/O-2A	8	8	7	TB3-8	RAMP 1 LOCAL CONTROL CONFIRM
I/O-2A	9	9	0	TB3-9	RAMP 2 LEVEL O CONFIRM
I/O-2A	10	9	1	TB3-10	RAMP 2 LEVEL 1 CONFIRM
I/O-2A	11	9	2	TB3-11	RAMP 2 LEVEL 2 CONFIRM
I/O-2A	12	9	3	TB3-12	RAMP 2 ON-LINE CONFIRM
I/O-2A	13	9	4	TB3-13	RAMP 2 GREEN CONFIRM
I/O-2A	14	9	5	TB3-14	RAMP 2 FLASH CONFIRM
I/O-2A	15	9	6	TB3-15	RAMP 2 BYPASS GREEN CONFIRM
I/O-2A	16	9	7	TB3-16	RAMP 2 LOCAL CONTROL CONFIRM
I/O-2A	17	A	0	TB3-17	RAMP 1 ADVANCE WARNING FLASHER CONFIRM
I/O-2A	18	A	1	TB3-18	RAMP 2 ADVANCE WARNING FLASHER CONFIRM
I/O-2A	19	A	2	TB3-19	RAMP 1 DEMAND DETECTOR RECALL CONFIRM
I/O-2A	20	A	3	TB3-20	RAMP 2 DEMAND DETECTOR RECALL CONFIRM
I/O-2A	21	A	4	TB3-21	SPARE INPUT 11
I/O-2A	22	A	5	TB3-22	SPARE INPUT 12
I/O-2A	23	A	6	TB3-23	SPARE INPUT 13
I/O-2A	24	A	7	TB3-24	SPARE INPUT 14
	25				NO CONNECTION
I/O-2B	26	C	0	TB4-1	TRAP DETECTOR 1
I/O-2B	27	C	1	TB4-1A	TRAP DETECTOR 2
I/O-2B	28	C	2	TB4-2	TRAP DETECTOR 3
I/O-2B	29	C	3	TB4-2A	TRAP DETECTOR 4
I/O-2B	30	C	4	TB4-3	TRAP DETECTOR 5
I/O-2B	31	C	5	TB4-3A	TRAP DETECTOR 6
I/O-2B	32	C	6	TB4-4	TRAP DETECTOR 7
I/O-2B	33	C	7	TB4-4A	TRAP DETECTOR 8
I/O-2B	34	D	0	TB4-5	TRAP DETECTOR 9
I/O-2B	35	D	1	TB4-5A	TRAP DETECTOR 10
I/O-2B	36	D	2	TB4-6	TRAP DETECTOR 11
I/O-2B	37	D	3	TB4-6A	TRAP DETECTOR 12
I/O-2B	38	D	4	TB4-7	TRAP DETECTOR 13
I/O-2B	39	D	5	TB4-7A	TRAP DETECTOR 14
I/O-2B	40	D	6	TB4-8	TRAP DETECTOR 15
I/O-2B	41	D	7	TB4-8A	TRAP DETECTOR 16
I/O-2B	42	E	0	TB4-9	TRAP DETECTOR 17
I/O-2B	43	E	1	TB4-9A	TRAP DETECTOR 18
I/O-2B	44	E	2	TB4-10	TRAP DETECTOR 19
I/O-2B	45	E	3	TB4-10A	TRAP DETECTOR 20
I/O-2B	46	E	4	TB4-11	TRAP DETECTOR 21
I/O-2B	47	E	5	TB4-11A	TRAP DETECTOR 22
I/O-2B	48	E	6	TB4-12	TRAP DETECTOR 23
I/O-2B	49	E	7	TB4-12A	TRAP DETECTOR 24
	50				NO CONNECTION
	51				NO CONNECTION
	52				24 V DC INTERNALLY FROM LCU PWR-7
	53				24 V DC GROUND INTERNALLY FROM LCU PWR-8
	54				CONTACTOR PIN ONLY ON CABLE 2
	55				NO CONTACTOR PIN ON CABLE 2
	56				CONTACTOR PIN ONLY ON CABLE 2
	57				CONTACTOR PIN ONLY ON CABLE 2

CABLE CONNECTOR IS AMP 206437-1 WITH AMP 205202-7 PIN CONTACTS

LCU				CABINET	
CONN	PIN	PORT	BIT	TEST POINT	SIGNAL DESCRIPTION
I/O-4A	1	44	0	TB6-1	DYNAMIC SIGN 1 ON/OFF COMMAND
I/O-4A	2	44	1	TB6-2	DYNAMIC SIGN 2 ON/OFF COMMAND
I/O-4A	3	44	2	TB6-3	DYNAMIC SIGN 3 ON/OFF COMMAND
I/O-4A	4	44	3	TB6-4	DYNAMIC SIGN 4 ON/OFF COMMAND
I/O-4A	5	44	4	TB6-5	GATE 1 OPEN COMMAND
I/O-4A	6	44	5	TB6-6	GATE 1 CLOSED COMMAND
I/O-4A	7	44	6	TB6-7	GATE 2 OPEN COMMAND
I/O-4A	8	44	7	TB6-8	GATE 2 CLOSED COMMAND
I/O-4A	9	45	0	TB6-9	RAMP 1 LEVEL O COMMAND
I/O-4A	10	45	1	TB6-10	RAMP 1 LEVEL 1 COMMAND
I/O-4A	11	45	2	TB6-11	RAMP 1 LEVEL 2 COMMAND
I/O-4A	12	45	3	TB6-12	RAMP 1 ON-LINE COMMAND (REMOTE CONTROL IN)
I/O-4A	13	45	4	TB6-13	RAMP 1 EMERGENCY FLASH COMMAND
I/O-4A	14	45	5	TB6-14	RAMP 1 DEMAND DETECTOR RECALL COMMAND
I/O-4A	15	45	6	TB6-15	SPARE OUTPUT 1
I/O-4A	16	45	7	TB6-16	SPARE OUTPUT 2
I/O-4A	17	46	0	TB6-17	RAMP 2 LEVEL O COMMAND
I/O-4A	18	46	1	TB6-18	RAMP 2 LEVEL 1 COMMAND
I/O-4A	19	46	2	TB6-19	RAMP 2 LEVEL 2 COMMAND
I/O-4A	20	46	3	TB6-20	RAMP 2 ON-LINE COMMAND (REMOTE CONTROL IN)
I/O-4A	21	46	4	TB6-21	RAMP 2 EMERGENCY FLASH COMMAND
I/O-4A	22	46	5	TB6-22	RAMP 2 DEMAND DETECTOR RECALL COMMAND
I/O-4A	23	46	6	TB6-23	SPARE OUTPUT 3
I/O-4A	24	46	7	TB6-24	LCS ON-LINE COMMAND
	25				NO CONNECTION
I/O-4B	26	48	0	TB7-1	NOT USED
I/O-4B	27	48	1	TB7-2	NOT USED
I/O-4B	28	48	2	TB7-3	NOT USED
I/O-4B	29	48	3	TB7-4	NOT USED
I/O-4B	30	48	4	TB7-5	NOT USED
I/O-4B	31	48	5	TB7-6	NOT USED
I/O-4B	32	48	6	TB7-7	NOT USED
I/O-4B	33	48	7	TB7-8	NOT USED
I/O-4B	34	49	0	TB7-9	NOT USED
I/O-4B	35	49	1	TB7-10	NOT USED
I/O-4B	36	49	2	TB7-11	NOT USED
I/O-4B	37	49	3	TB7-12	NOT USED
I/O-4B	38	49	4	TB7-13	NOT USED
I/O-4B	39	49	5	TB7-14	NOT USED
I/O-4B	40	49	6	TB7-15	NOT USED
I/O-4B	41	49	7	TB7-16	NOT USED
I/O-4B	42	4A	0	TB7-17	NOT USED
I/O-4B	43	4A	1	TB7-18	NOT USED
I/O-4B	44	4A	2	TB7-19	NOT USED
I/O-4B	45	4A	3	TB7-20	NOT USED
I/O-4B	46	4A	4	TB7-21	NOT USED
I/O-4B	47	4A	5	TB7-22	NOT USED
I/O-4B	48	4A	6	TB7-23	NOT USED
I/O-4B	49	4A	7	TB7-24	NOT USED
	50				NO CONNECTION
	51				NO CONNECTION
	52				24 V DC INTERNALLY FROM LCU PWR-7
	53				24 V DC GROUND INTERNALLY FROM LCU PWR-8
	54				CONTACTOR PIN ONLY ON CABLE 4
	55				CONTACTOR PIN ONLY ON CABLE 4
	56				CONTACTOR PIN ONLY ON CABLE 4
	57				NO CONTACTOR PIN ON CABLE 4

CABLE CONNECTOR IS AMP 206437-1 WITH AMP 205202-7 PIN CONTACTS

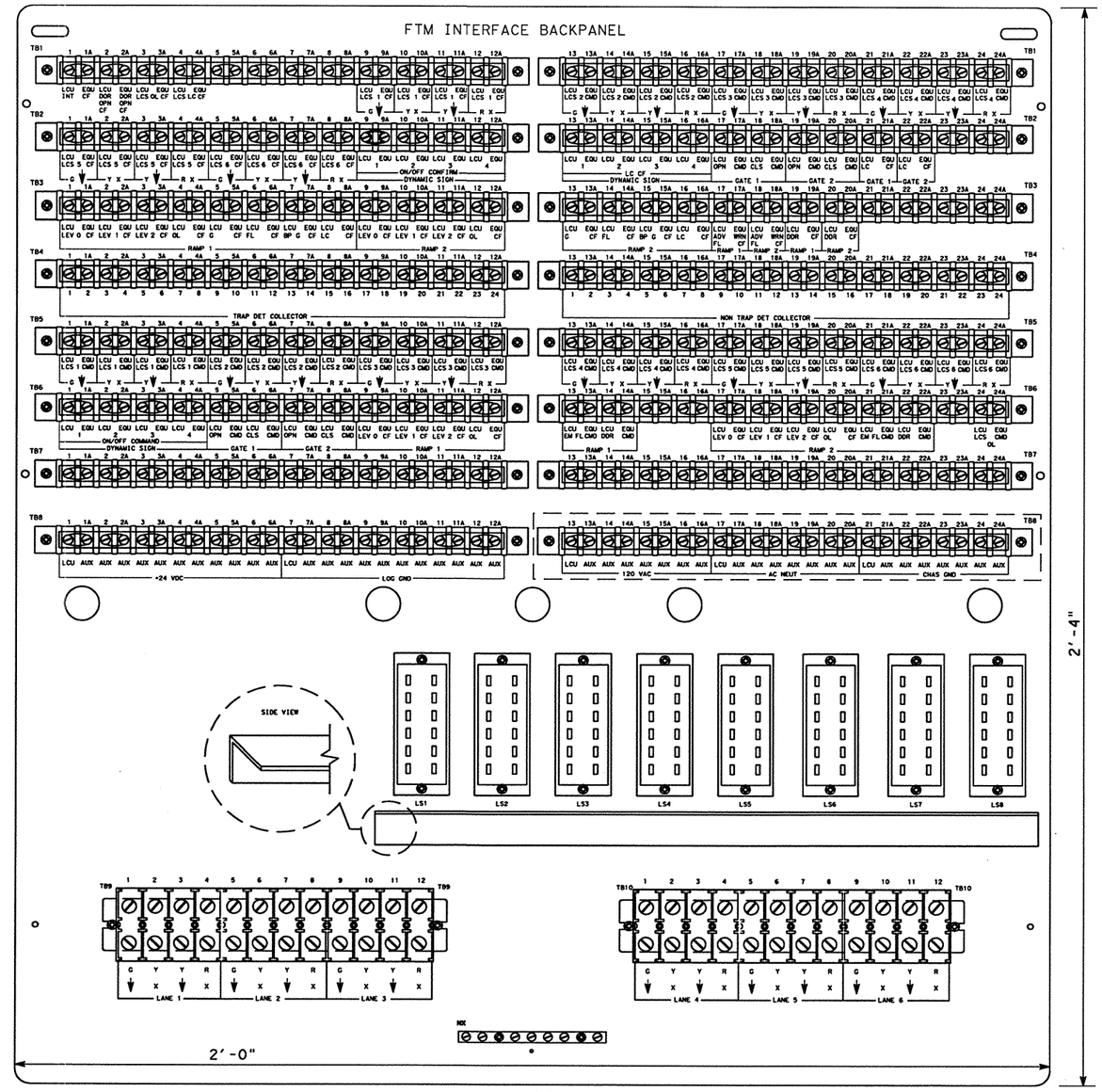

LCU POWER CABLE		
PIN	TEST POINT	SIGNAL
1	TB8-13	120 V AC (BLACK)
2	TB8-17	120 V AC COMMON (WHITE)
3	TB8-21	120 V AC EARTH GROUND (GREEN)
4	-	NO CONNECTION
5	-	NO CONNECTION
6	-	NO CONNECTION
7	TB8-1	24 V DC (RED)
8	TB8-1	24 V DC GROUND (BLUE)
9	-	NO CONNECTION

NOTES

* TB8 (13-24A) ~~SHALL~~ HAVE A PROTECTIVE STANDOFF LEXAN COVER. LEXAN COVER INDICATED BY DASHED BOX AROUND TB8.
* LCU CABLES ~~SHALL BE~~ TERMINATED ON THE BACK OF THE BACKPANEL AND SOLDERED TO THE TERMINALS AS SHOWN IN THE WIRING DIAGRAM.
* ALL EQUIPMENT WIRING ~~SHALL BE~~ CONNECTED ON THE FRONT OF THE BACKPANEL TO THE RESPECTIVE TERMINALS LABELED EQU USING FORKED LUG TERMINALS.
* ALL DETECTOR COLLECTOR WIRES ~~SHALL BE~~ CONNECTED TO THE RESPECTIVE TERMINALS.
* ALL DETECTOR EMITTER WIRES ~~SHALL BE~~ BUSSED TOGETHER AND WILL BE CONNECTED TO LOGIC GROUND.

R = RADIUS
D = DIAMETER

CABLE CONNECTOR IS AMP 206708-1 WITH AMP 66101-1 SOCKET CONTACTS

STATE OF TEXAS
DANNY MAGEE
83653
REGISTERED PROFESSIONAL ENGINEER

The seal appearing on this document was authorized by DANNY MAGEE PE 83653, on May 1, 2003.

TEXAS DEPARTMENT OF TRANSPORTATION

ITS FTM BACKPANEL DETAILS

SHEET 1 OF 1

DN:	DRAWING	DATE	FED. RD. DIV. NO.	STATE	FEDERAL AID PROJECT NO.			HIGHWAY NO.
CK DN:	ORIGINAL		6	TEXAS	NH-99(462)			IH-35
DW:			STATE DIST. NO.	COUNTY	CONTROL NO.	SECTION NO.	JOB NO.	SHEET NO.
CK DW:			22	WEBB	0018	06	131	741
TR:								
CK TR:								

2003/ITS/PROJECT/WEB/0018-05-062IH35WIDEN/IH35WIDENCAD, FILE NAME: B60 FTM BACK PANEL.DGN

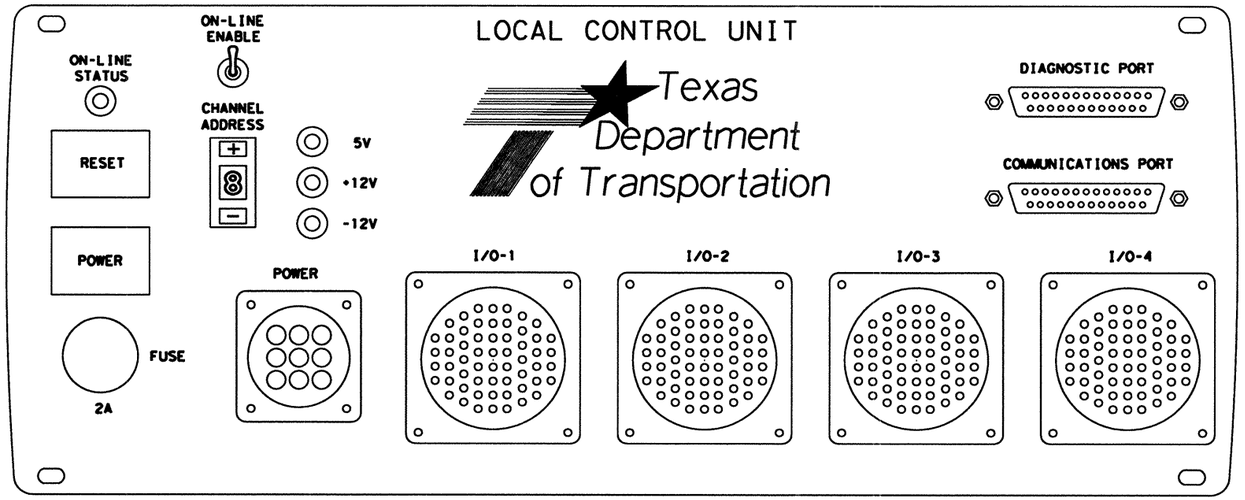

LCU FRONT PANEL

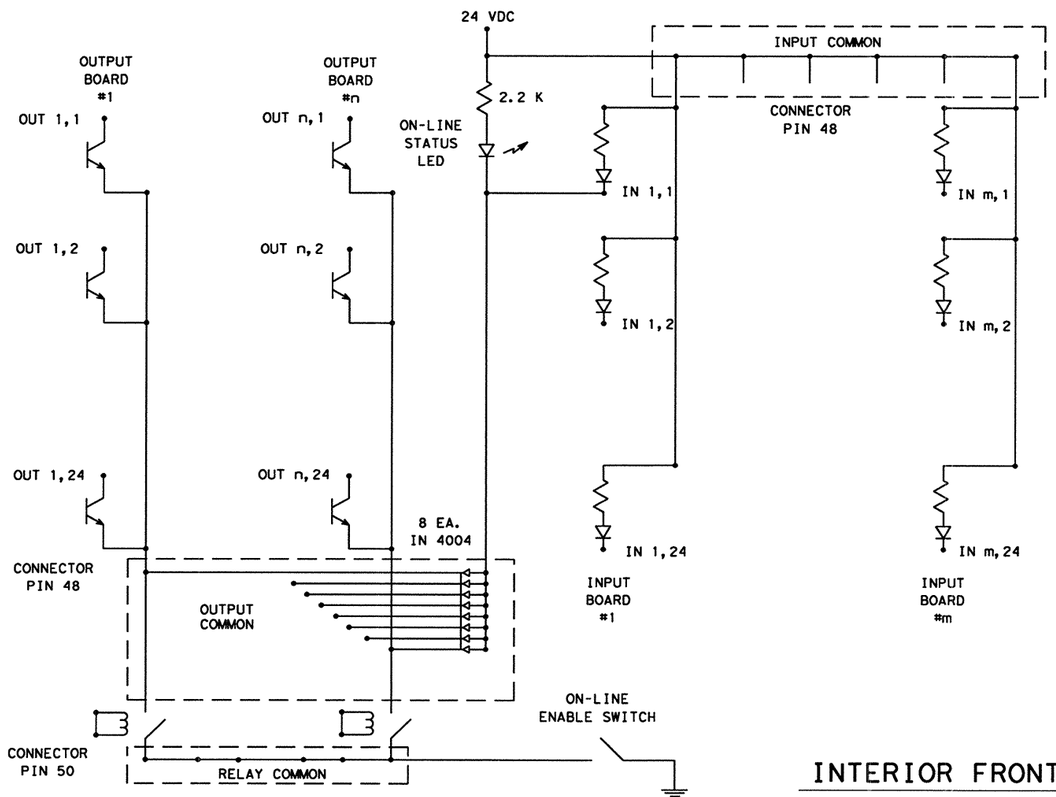

INTERIOR FRONT PANEL SCHEMATIC

STATE OF TEXAS
DANNY MAGEE
83653
REGISTERED PROFESSIONAL ENGINEER

The seal appearing on this document was authorized by DANNY MAGEE PE 83653, on MAY 1, 2003.

©2003 Texas Department of Transportation

IH 35
LOOP 20 TO UNIROYAL ROAD

ITS
LOCAL CONTROL UNIT FRONT PANEL & INTERIOR SCHEMATIC

SHEET 1 OF 1

FED RD DIV NO	FEDERAL AID PROJECT NO		SHEET NO
6	NH-2002 (79)		742
STATE	STATE DIST		COUNTY
TEXAS	LAREDO		WEBB
CONT	SECT	JOB	HIGHWAY NO
0018	05	062, ETC	IH 35

2003/ITS/PROJECT/WEB/0018-05-062IH35WIDEN/IH35WIDENCAD; FILE NAME: B60 CONT UNIT.DGN

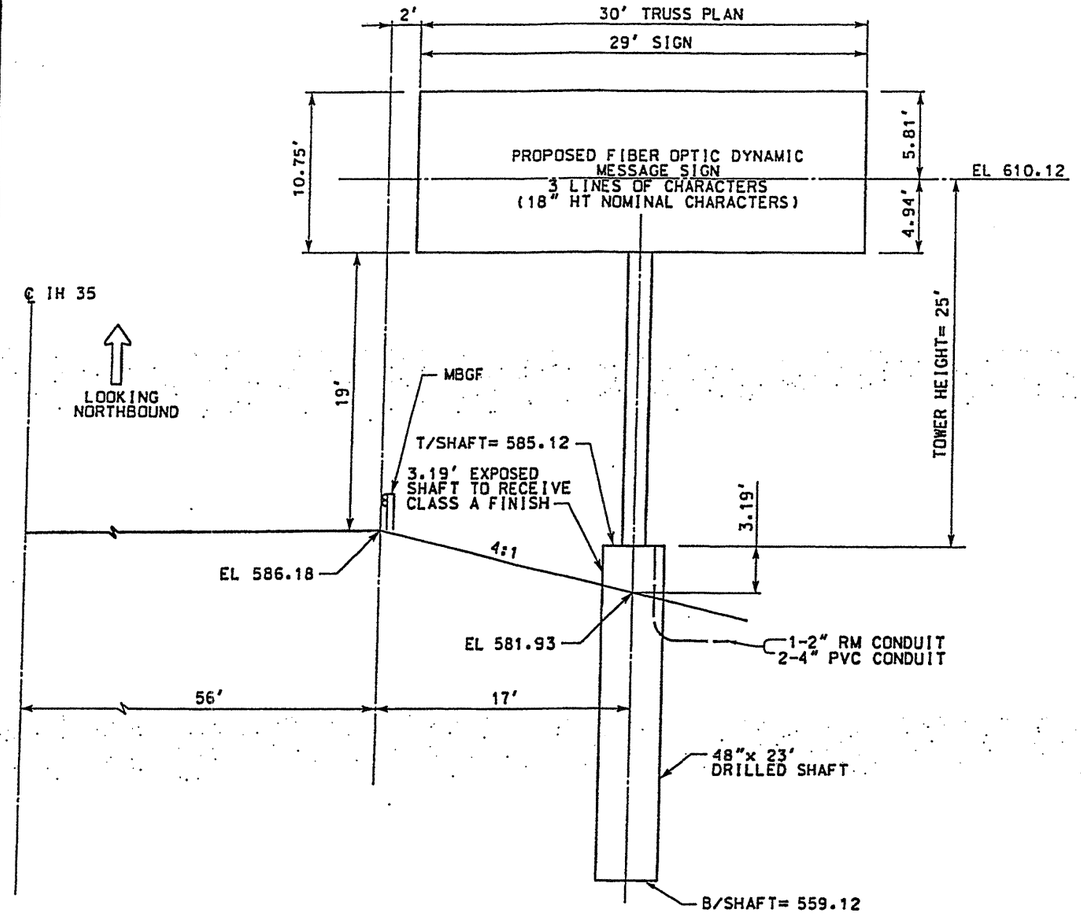

DYNAMIC MESSAGE SIGN 7

IH 35
73' RT STA 248+00
COSS 30' (ZONE 1)
ANCHOR BOLTS = 2-1/4" x 4'-9"

NOTE: ELEVATIONS ARE ~~TO BE~~ FIELD VERIFIED

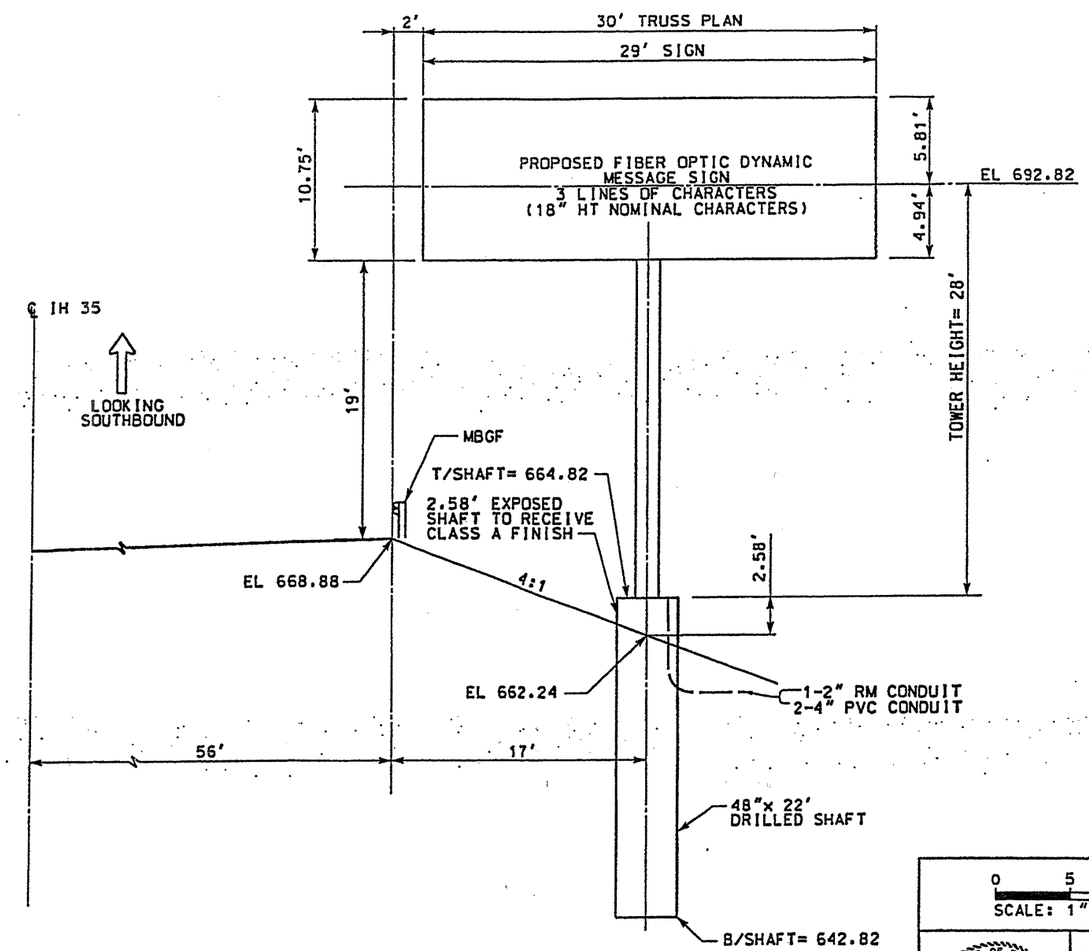

DYNAMIC MESSAGE SIGN 8

IH 35
73' LT STA 447+50
COSS 30' (ZONE 1)
ANCHOR BOLTS = 2-1/2" x 5'-2"

NOTE: ELEVATIONS ARE ~~TO BE~~ FIELD VERIFIED

0 5 10
SCALE: 1" = 10'

STATE OF TEXAS
JAMES B. HORNSBY
81485
REGISTERED PROFESSIONAL ENGINEER

THE SEAL APPEARING ON THIS DOCUMENT WAS AUTHORIZED BY JAMES B. HORNSBY PE 81485, ON APRIL 18, 2003

KBR
Engineered by KBR Technical Services, Inc

©2003 Texas Department of Transportation

IH 35
LOOP 20 TO UNIROYAL ROAD

DYNAMIC MESSAGE SIGN (DMS)
STRUCTURE DETAIL

SHEET 1 OF 1

FED RD DIV NO	FEDERAL AID PROJECT NO		SHEET NO
6	NH-2002 (79)		743
STATE	STATE DIST		COUNTY
TEXAS	LAREDO		WEBB
CONT	SECT	JOB	HIGHWAY NO
0018	05	062, ETC	IH 35

REF FILE(S): j011op01.bdr, bdr LV ON = 18,45,57,58,60-62

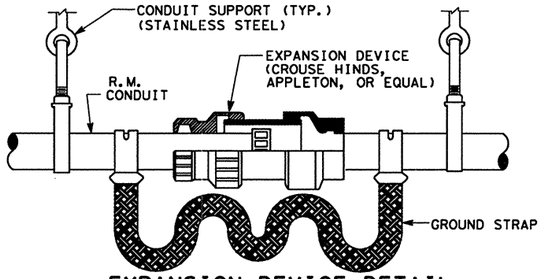

EXPANSION DEVICE DETAIL

INSTALL AT ALL OPEN JOINTS, AT EACH END OF BRIDGE ABUTMENTS & BETWEEN BRIDGE BENTS, ALLOW FOR 8" MOVEMENT

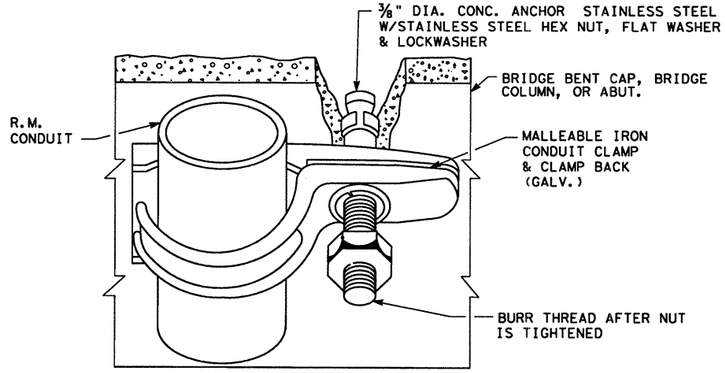

NOTE: CONDUIT CLAMP SPACING ~~SHALL BE~~ A MAXIMUM OF 5'.

CONDUIT CLAMP DETAIL

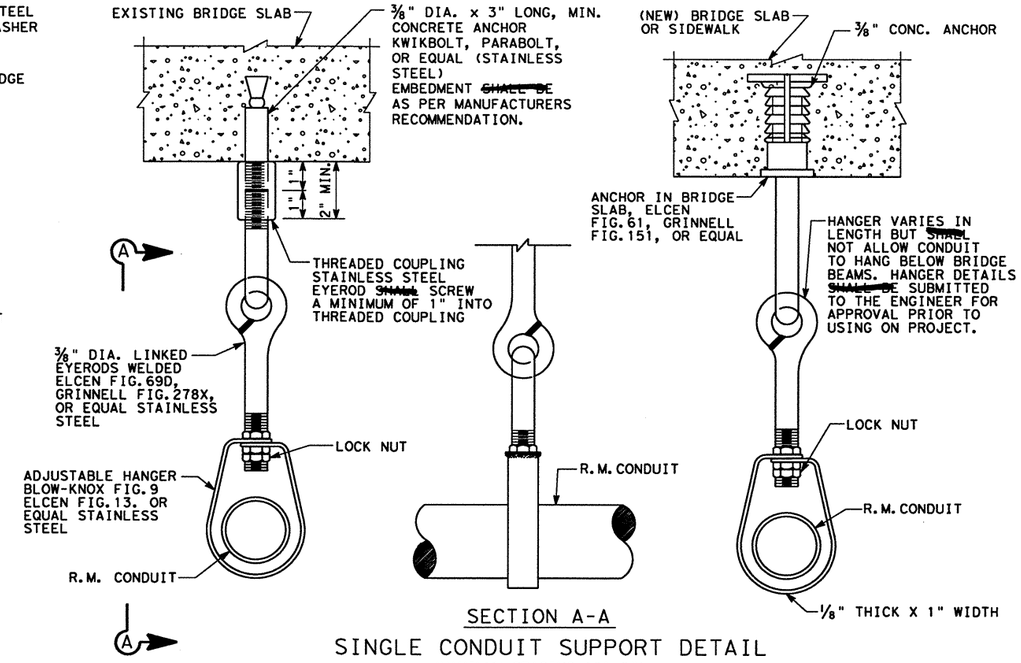

SECTION A-A

SINGLE CONDUIT SUPPORT DETAIL

(MAXIMUM SPACING-10'-0")

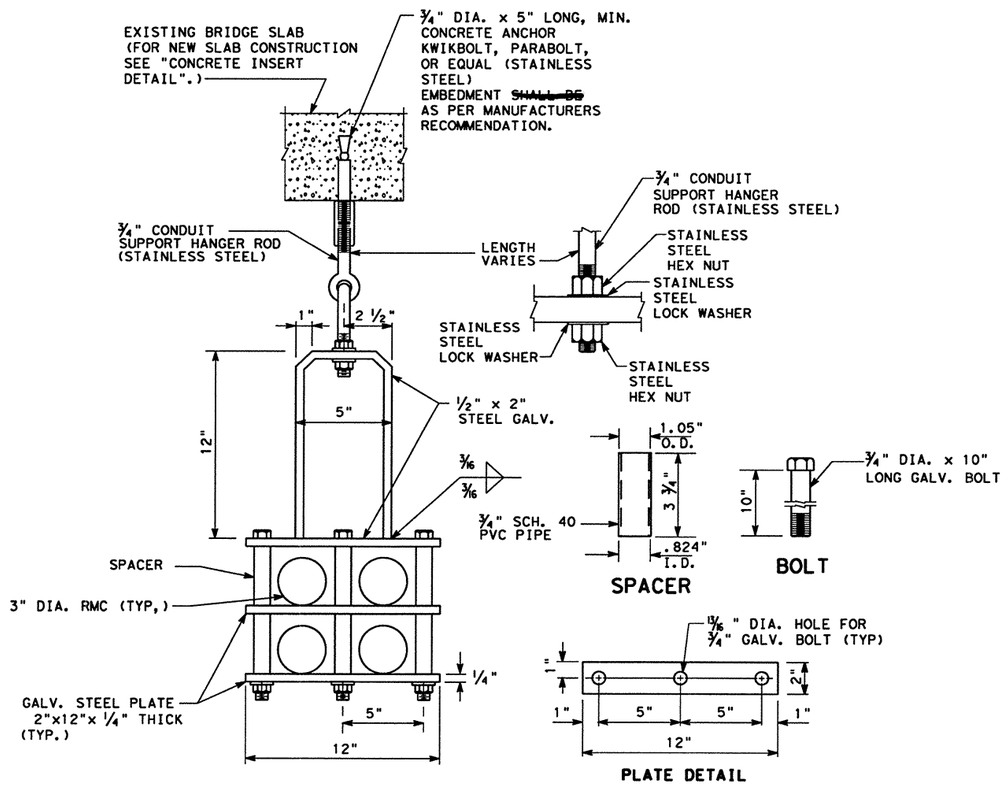

HANGER VARIES IN LENGTH BUT ~~SHALL~~ NOT ALLOW CONDUIT TO HANG BELOW BRIDGE BEAMS.

MULTIPLE CONDUIT SUPPORT HANGER & DETAILS

NOTE: CONTRACTOR MAY USE COMMERCIALLY DESIGNED MULTIPLE CONDUIT SUPPORT HANGER, HANGER DETAILS ~~SHALL BE~~ SUBMITTED TO THE ENGINEER FOR APPROVAL PRIOR TO USING ON PROJECT.
MAXIMUM SPACING OF CONDUIT SUPPORT HANGERS ~~SHALL BE~~ 10'-0" C-C.

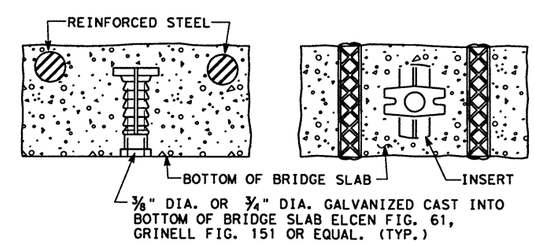

CONCRETE INSERT DETAIL

STATE OF TEXAS
DANNY MAGEE
83653
PROFESSIONAL ENGINEER

The seal appearing on this document was authorized by DANNY MAGEE PE 83653, on MAY 1, 2003.

©2003 Texas Department of Transportation

IH 35
LOOP 20 TO UNIROYAL ROAD

ITS
RMC
INSTALLATION DETAILS

SHEET 1 OF 2

FED RD DIV NO	FEDERAL AID PROJECT NO		SHEET NO
6	NH-2002 (79)		743 A
STATE	STATE DIST		COUNTY
TEXAS	LAREDO		WEBB
CONT	SECT	JOB	HIGHWAY NO
0018	05	062, ETC	IH 35

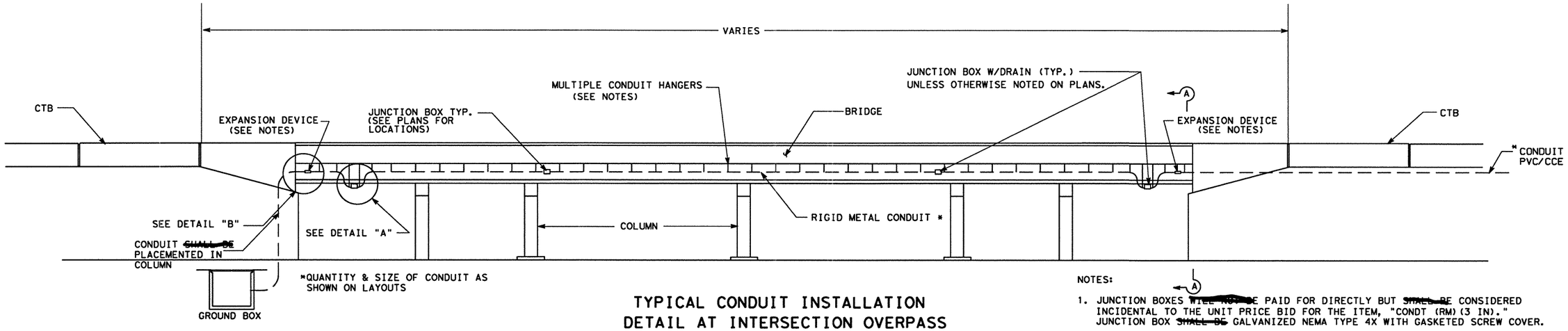

TYPICAL CONDUIT INSTALLATION DETAIL AT INTERSECTION OVERPASS

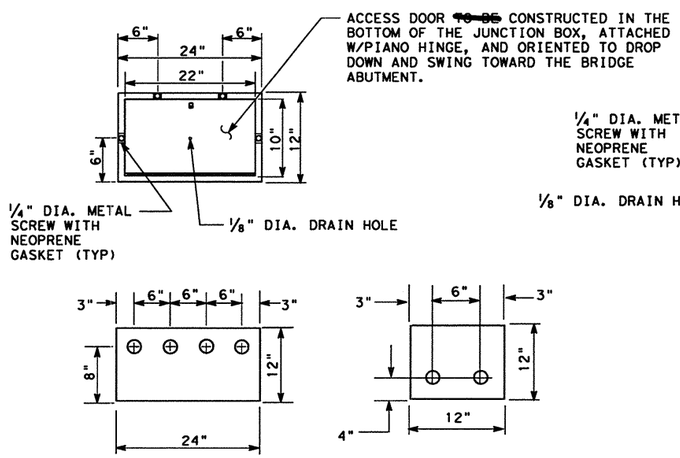

24"x 12"x 12" JUNCTION BOX DETAIL

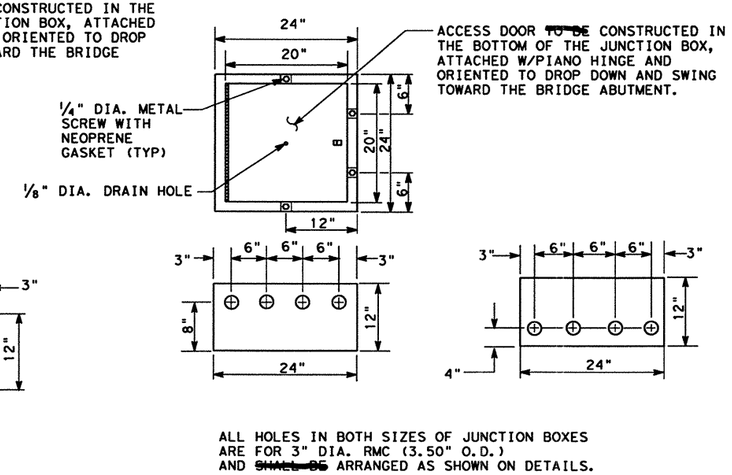

ALL HOLES IN BOTH SIZES OF JUNCTION BOXES ARE FOR 3" DIA. RMC (3.50" O.D.) AND ~~SHALL BE~~ ARRANGED AS SHOWN ON DETAILS.

24"X 24"X 12" JUNCTION BOX DETAIL

NOTES:

1. JUNCTION BOXES ~~WILL NOT BE~~ PAID FOR DIRECTLY BUT ~~SHALL BE~~ CONSIDERED INCIDENTAL TO THE UNIT PRICE BID FOR THE ITEM, "CONDT (RM)(3 IN)." JUNCTION BOX ~~SHALL BE~~ GALVANIZED NEMA TYPE 4X WITH GASKETED SCREW COVER.
2. IN ADDITION TO THE TWO JUNCTION BOXES LOCATED AT THE BRIDGE ENDS, ADDITIONAL JUNCTION BOXES ~~SHALL BE~~ LOCATED AS SHOWN ON THE LAYOUT SHEETS.
3. CONDUIT ~~SHALL BE~~ ATTACHED TO BRIDGE SLAB W/MULTIPLE CONDUIT HANGERS. MULTIPLE CONDUIT HANGERS ~~WILL NOT BE~~ PAID FOR DIRECTLY BUT ~~SHALL BE~~ CONSIDERED INCIDENTAL TO THE UNIT PRICE BID FOR THE ITEM, "CONDT (RM)(3")."
4. CONTRACTOR ~~SHALL~~ USE ONLY ENGINEER APPROVED MULTIPLE CONDUIT HANGERS SPACED NO MORE THAN 10'-0".
5. CONTRACTOR ~~SHALL~~ USE MANUFACTURED INSULATED BUSHINGS AT ALL ENDS OF THE CONDUIT.
6. EXPANSION DEVICES ~~WILL NOT BE~~ PAID FOR DIRECTLY BUT ~~SHALL BE~~ CONSIDERED INCIDENTAL TO THE UNIT PRICE BID FOR THE ITEM, "CONDT (RM)(3")." EXPANSION DEVICES ~~SHALL BE~~ PLACED AT ALL BRIDGE EXPANSION JOINTS.
7. THE NUMBER AND SIZE OF CONDUIT MAY VARY FROM BRIDGE TO BRIDGE. MULTIPLE CONDUIT HANGERS ~~SHALL BE~~ DESIGNED TO ACCOMMODATE THE GIVEN NUMBER OF CONDUITS.
8. CONTRACTOR MAY VARY THE LOCATION AND SPACING OF CONDUIT THROUGH THE ABUTMENT IN ORDER TO SECURE BETTER PLACEMENT OF CONDUIT UNDER BRIDGE WITH APPROVAL OF THE ENGINEER.
9. CONTRACTOR ~~SHALL~~ COORDINATE PLACEMENT OF CONCRETE ENCASED CONDUIT THROUGH REINFORCED VOLUME OR REINFORCED EARTH RETAINING WALL SECTION TO INSURE THAT CONCRETE ENCASEMENT DOES NOT INTERFERE WITH REINFORCING MESH.
10. JUNCTION BOXES ~~SHALL BE~~ HOT-DIP GALVANIZED SHEET STEEL WITH A MIMIMUM THICKNESS OF 1/8 INCH.

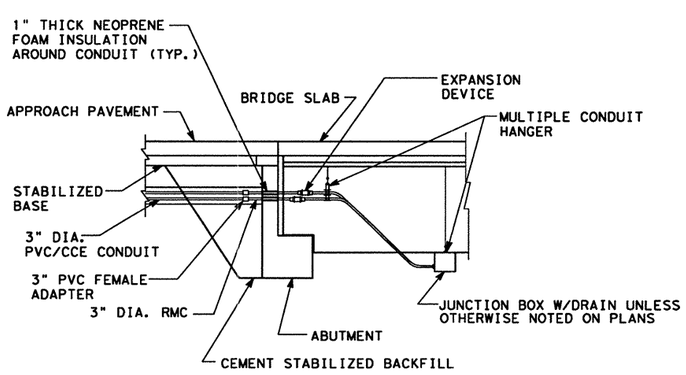

DETAIL "B"

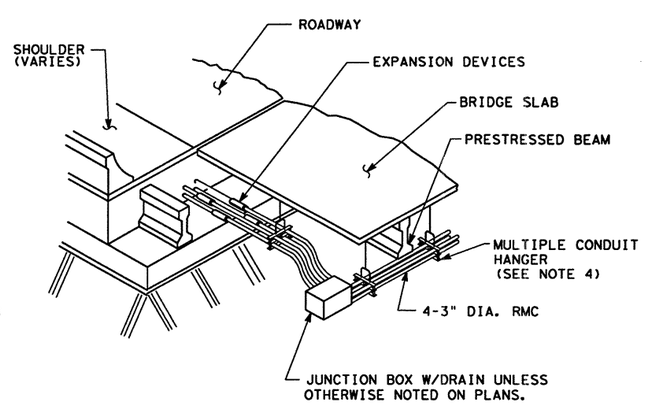

DETAIL "A"

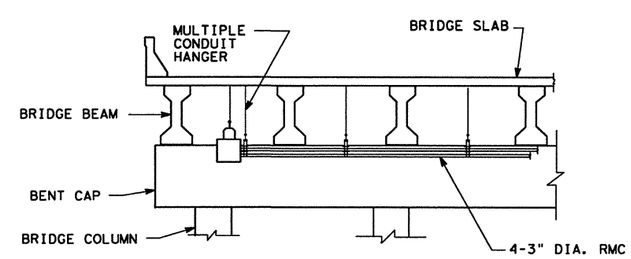

SECTION A-A

STATE OF TEXAS
DANNY MAGEE
83653
PROFESSIONAL ENGINEER

The seal appearing on this document was authorized by DANNY MAGEE PE 83653, on MAY 1, 2003.

©2003 Texas Department of Transportation

IH 35
LOOP 20 TO UNIROYAL ROAD

ITS
RMC
GENERAL DETAILS

SHEET 2 OF 2

FED RD DIV NO	FEDERAL AID PROJECT NO		SHEET NO
6	NH-2002 (79)		743 B
STATE	STATE DIST		COUNTY
TEXAS	LAREDO		WEBB
CONT	SECT	JOB	HIGHWAY NO
0018	05	062, ETC	IH 35

2003/ITS/PROJECT/WEB/0018-05-062IH35WIDEN/IH35WIDENCAD; FILE NAME: 860 RMC2.DGN

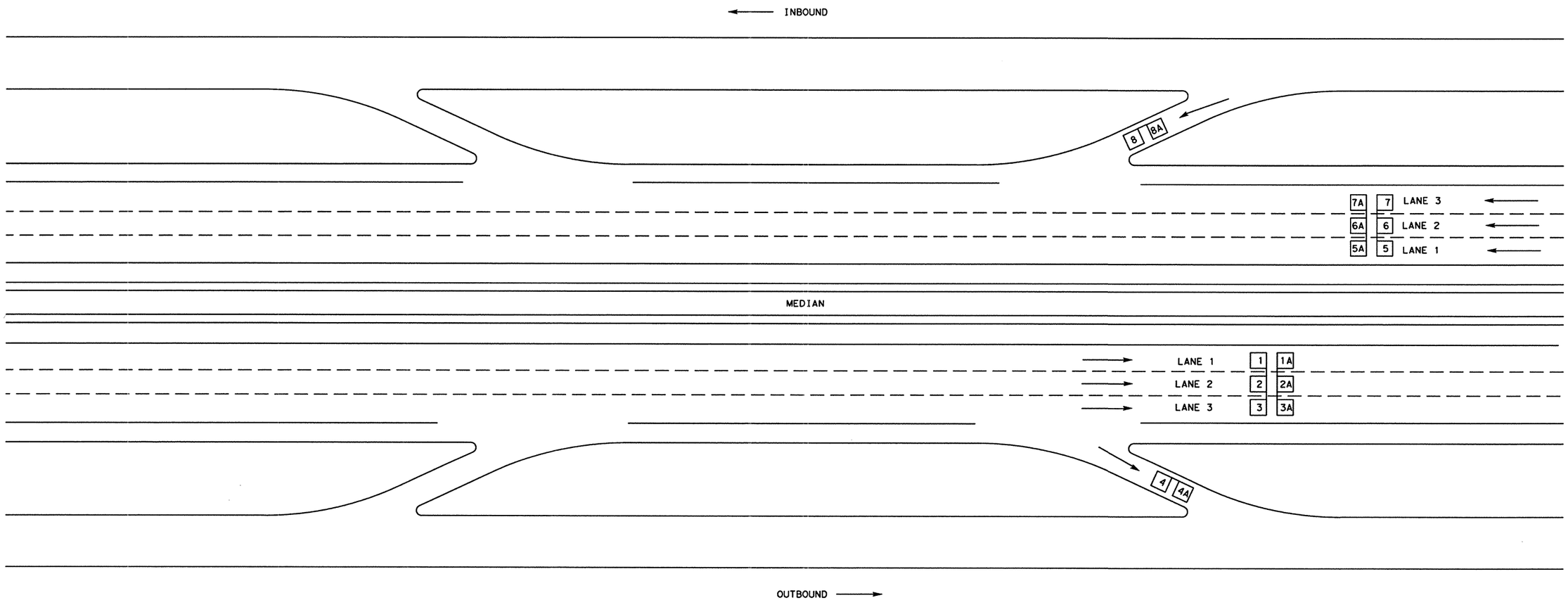

NUMBERING CONVENTION NOTES:

DETECTOR NUMBERING DEFINED ON A PER LCU BASIS.

MAINLANE DETECTOR NUMBERING ~~WILL BE~~ FROM MEDIAN OUT AND LEADING EDGE ~~WILL BE~~ IN DIRECTION OF TRAFFIC FLOW.

STATE OF TEXAS
DANNY MAGEE
83653
REGISTERED
PROFESSIONAL ENGINEER

The seal appearing on this document was authorized by DANNY MAGEE PE 83653, on MAY 1, 2003.

©2003 Texas Department of Transportation

IH 35
LOOP 20 TO UNIROYAL ROAD

ITS
INCIDENT DETECTION
ASSIGNMENTS

SHEET 1 OF 1

FED RD DIV NO	FEDERAL AID PROJECT NO		SHEET NO
6	NH-2002 (79)		743 C
STATE	STATE DIST		COUNTY
TEXAS	LAREDO		WEBB
CONT	SECT	JOB	HIGHWAY NO
0018	05	062, ETC	IH 35

2003/ITS/PROJECT/WEB/0018-05-062IH35WIDEN/IH35WIDENCAD; FILE NAME: B60 LOOPS#.DGN

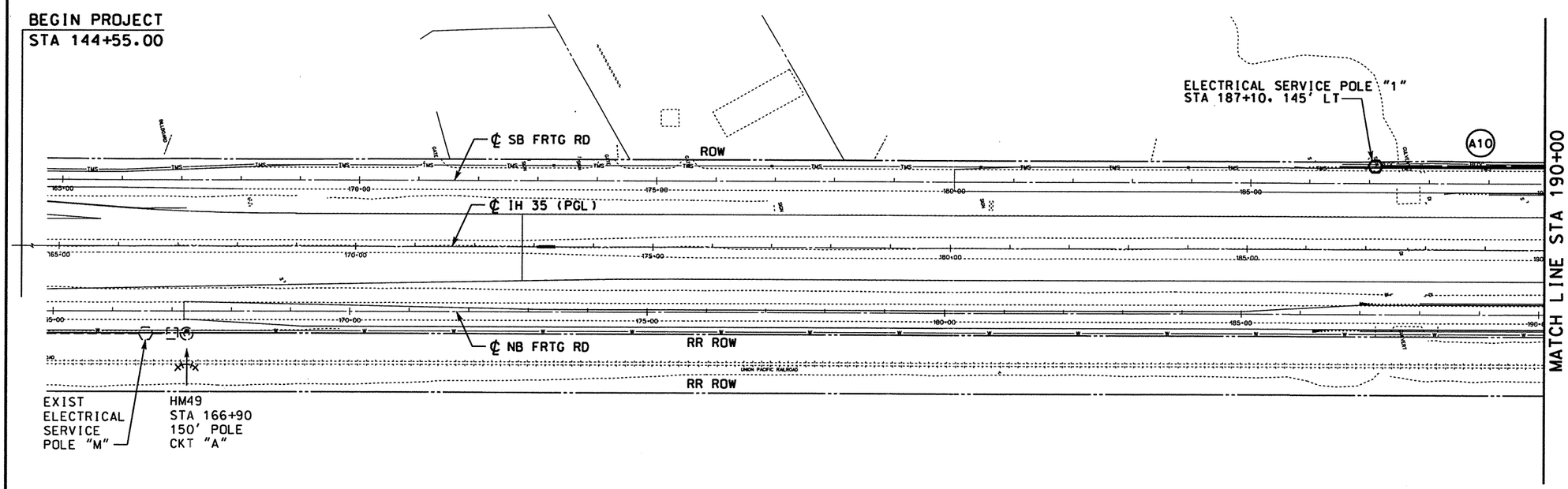

LEGEND

- RDWY ILL ASSEM (TY SA40T-8) (0.25 KW)S
- UNDERPASS LUMINAIRE
- ELECTRICAL SERVICE
- GROUND BOX, BELOW GRADE
- JUNCTION BOX, ABOVE GRADE
- NEMA 3R, HEAVY DUTY, 30A FUSED DISCONNECT
- (XX) CONDUCTOR IN CONDUIT AND CONDUIT PVC SCHD 40 BURIED, CONDUIT RUN NUMBER (SEE TABLE ON PLANS)
- (XX) CONDUCTOR IN CONDUIT AND CONDUIT BORE UNDER ROADWAY, CONDUIT RUN NUMBER (SEE TABLE ON PLANS)
- (XX) CONDUCTOR IN CONDUIT AND CONDUIT RIGID ABOVE GROUND, CONDUIT RUN NUMBER (SEE TABLE ON PLANS)

SHEET SUMMARY

ITEM	DESC	DESCRIPTION	UNIT	EST QTY	FINAL QTY
618	511	CONDUIT (PVC)(SCHD 40)(2")	LF	400	
620	503	ELEC CONDUCTOR (NO. 8)(BARE)	LF	405	
620	509	ELEC CONDUCTOR (NO. 8)(INSULATION)	LF	810	
628	504	ELEC SERV TY A (240/480)100(NS)GS(E)SP(U)	EA	1	

CONDUIT & CONDUCTOR RUNS

RUN	LENGTH	GROUND LENGTH (FEET)					CONDUCTOR NO & LENGTH (FEET)					CONDUIT (FEET)			
		12 BARE FT	8 BARE FT	6 BARE FT	4 BARE FT	2 BARE FT	10 XHHW FT	8 XHHW FT	6 XHHW FT	4 XHHW FT	2 XHHW FT	3/4" RM FT	2" RM FT	2" SCH 40 PVC FT	2" SCH 40 PVC BORED FT
A10	400		405					2-405						400	
			405					810						400	

0 100 200
SCALE: 1" = 200'

STATE OF TEXAS
CHARLES WILLIAM SVEC
57814
REGISTERED PROFESSIONAL ENGINEER

THE SEAL APPEARING ON THIS DOCUMENT WAS AUTHORIZED BY CHARLES WILLIAM SVEC PE 57814, ON APRIL 18, 2003

KBR
Engineered by KBR Technical Services, Inc

©2003 Texas Department of Transportation

IH 35
LOOP 20 TO UNIROYAL ROAD
ROADWAY LIGHTING LAYOUT
STA 165+00 TO STA 190+00
SHEET 1 OF 12

FED RD DIV NO	FEDERAL AID PROJECT NO	SHEET NO
6	NH-2002 (79)	744
STATE	STATE DIST	COUNTY
TEXAS	LAREDO	WEBB
CONT	SECT / JOB	HIGHWAY NO
0018	05 / 062, ETC	IH 35

REF FILE(S): j01lop01.ill, ill LV ON = 1-63
j01lop01.uti, uti LV ON = 1-63
REF FILE(S): j01lop01.row, row LV ON = 1-22,24-63
j01lop01.eop, eop LV ON = 1-11,13-17,19-63
j01lop01.bck, bck LV ON = 2,9-10,14,17,21,25,28
j01lop01.alg, alg LV ON = 1-6,35-39
j01lop01.bdr, bdr LV ON = 17,45,57,58,60-62
miloint.row, row
b32rlp01.dgn-10 HOUFILE023 \hcivil\cf0130\ 4/17/2003

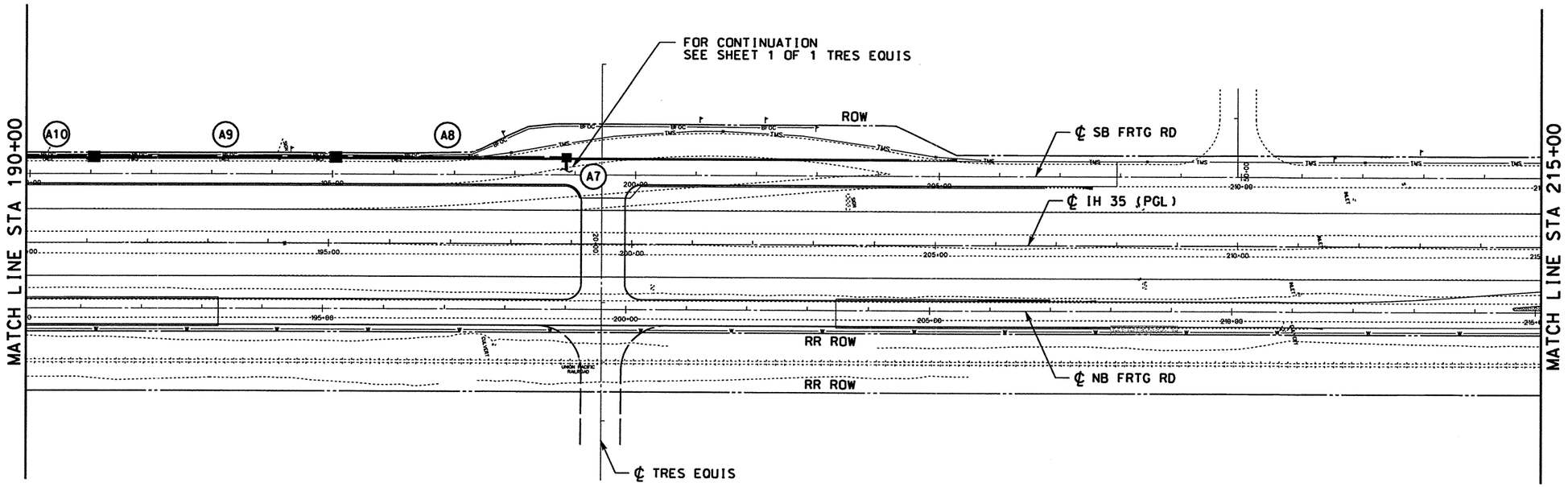

LEGEND

- RDWY ILL ASSEM (TY SA40T-8) (0.25 KW)S
- UNDERPASS LUMINAIRE
- ELECTRICAL SERVICE
- GROUND BOX, BELOW GRADE
- JUNCTION BOX, ABOVE GRADE
- NEMA 3R, HEAVY DUTY, 30A FUSED DISCONNECT
- (XX) CONDUCTOR IN CONDUIT AND CONDUIT PVC SCHD 40 BURIED, CONDUIT RUN NUMBER (SEE TABLE ON PLANS)
- (XX) CONDUCTOR IN CONDUIT AND CONDUIT BORE UNDER ROADWAY, CONDUIT RUN NUMBER (SEE TABLE ON PLANS)
- (XX) CONDUCTOR IN CONDUIT AND CONDUIT RIGID ABOVE GROUND, CONDUIT RUN NUMBER (SEE TABLE ON PLANS)

SHEET SUMMARY

ITEM	DESC	DESCRIPTION	UNIT	EST QTY	FINAL QTY
618	511	CONDUIT (PVC)(SCHD 40)(2")	LF	780	
620	503	ELEC CONDUCTOR (NO. 8)(BARE)	LF	790	
620	509	ELEC CONDUCTOR (NO. 8)(INSULATION)	LF	1580	
624	501	GROUND BOX TY A (122311) W/APRON	EA	3	

CONDUIT & CONDUCTOR RUNS

RUN	LENGTH	GROUND LENGTH (FEET)					CONDUCTOR NO & LENGTH (FEET)					CONDUIT (FEET)			
		12 BARE FT	8 BARE FT	6 BARE FT	4 BARE FT	2 BARE FT	10 XHHW FT	8 XHHW FT	6 XHHW FT	4 XHHW FT	2 XHHW FT	3/4" RM FT	2" RM FT	2" SCH 40 PVC FT	2" SCH 40 PVC BORED FT
A8	380		385					2-385						380	
A9	400		405					2-405						400	
			790					1580						780	

0 100 200
SCALE: 1" = 200'

STATE OF TEXAS
CHARLES WILLIAM SVEC
PE 57814
REGISTERED PROFESSIONAL ENGINEER

THE SEAL APPEARING ON THIS DOCUMENT WAS AUTHORIZED BY CHARLES WILLIAM SVEC PE 57814, ON APRIL 18, 2003

KBR
Engineered by KBR Technical Services, Inc

©2003 Texas Department of Transportation

IH 35
LOOP 20 TO UNIROYAL ROAD
ROADWAY LIGHTING LAYOUT
STA 190+00 TO STA 215+00

SHEET 2 OF 12

FED RD DIV NO	FEDERAL AID PROJECT NO		SHEET NO
6	NH-2002 (79)		745
STATE	STATE DIST		COUNTY
TEXAS	LAREDO		WEBB
CONT	SECT	JOB	HIGHWAY NO
0018	05	062, ETC	IH 35

REF FILE(S): j0110p01.ill, ill LV ON = 1-63
REF FILE(S): j0110p01.utl, utl LV ON = 1-63
REF FILE(S): j0110p01.bdr, bdr LV ON = 17,45,57,58,60-62
j0110p01.alg, alg LV ON = 1-6,35-39
j0110p01.bck, bck LV ON = 2,9-10,14,17,21,25,28
j0110p01.eqp, eqp LV ON = 1-11,13-17,19-63
milpint.row, row LV ON = 1-22,24-63
b32rip02.dgn-05 HOUFILE023 \hcivil\cf0130\ 4/17/2003

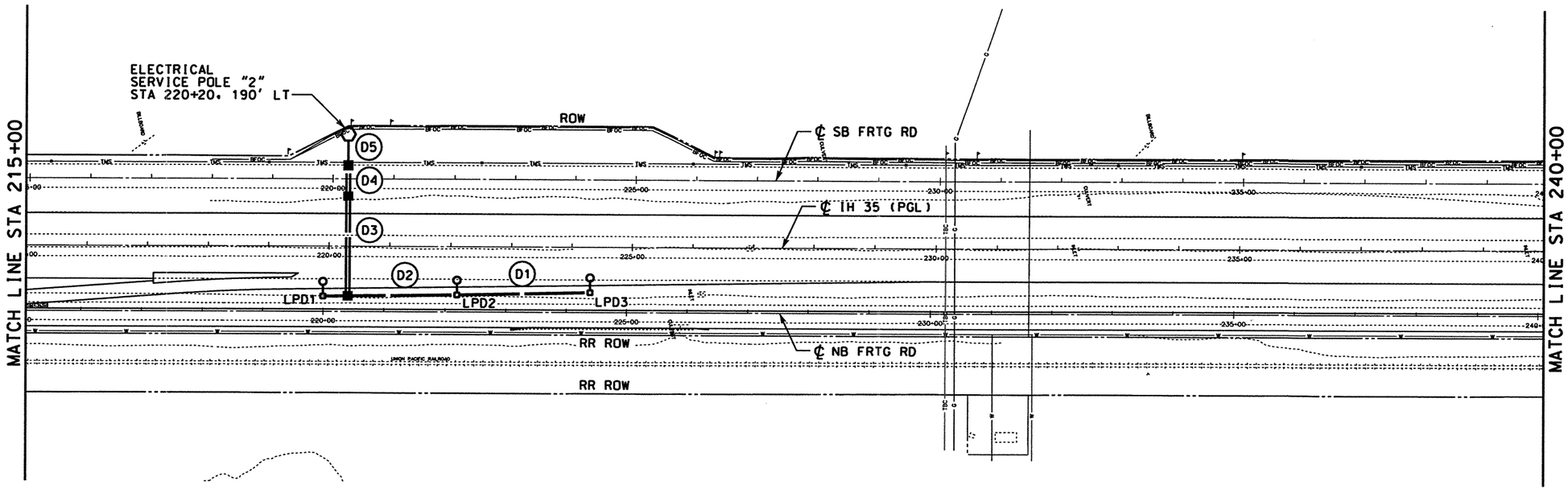

LEGEND

- RDWY ILL ASSEM (TY SA40T-8) (0.25 KW)S
- UNDERPASS LUMINAIRE
- ELECTRICAL SERVICE
- GROUND BOX, BELOW GRADE
- JUNCTION BOX, ABOVE GRADE
- NEMA 3R, HEAVY DUTY, 30A FUSED DISCONNECT
- (XX) CONDUCTOR IN CONDUIT AND CONDUIT PVC SCHD 40 BURIED, CONDUIT RUN NUMBER (SEE TABLE ON PLANS)
- (XX) CONDUCTOR IN CONDUIT AND CONDUIT BORE UNDER ROADWAY, CONDUIT RUN NUMBER (SEE TABLE ON PLANS)
- (XX) CONDUCTOR IN CONDUIT AND CONDUIT RIGID ABOVE GROUND, CONDUIT RUN NUMBER (SEE TABLE ON PLANS)

0 100 200
SCALE: 1" = 200'

ROADWAY ILLUMINATION ASSEMBLY SUMMARY

STD NO	STATION NO	TYPE	SP-CKT	REMARK
LPD1	219+90	(TY SA40T-8)(0.25KW)S	2-D	85' RIGHT OF IH 35
LPD2	222+10	(TY SA40T-8)(0.25KW)S	2-D	82' RIGHT OF IH 35
LPD3	224+30	(TY SA40T-8)(0.25KW)S	2-D	77' RIGHT OF IH 35

SHEET SUMMARY

ITEM	DESC	DESCRIPTION	UNIT	EST QTY	FINAL QTY
610	503	RDWY ILL ASSEM (TY SA 40T-8)(.25 KW)S	EA	3	
618	511	CONDUIT (PVC)(SCHD 40)(2")	LF	490	
618	532	CONDUIT (PVC)(SCHD 40)(2")(BORE)	LF	220	
620	503	ELEC CONDUCTOR (NO. 8)(BARE)	LF	735	
620	509	ELEC CONDUCTOR (NO. 8)(INSULATION)	LF	1470	
624	501	GROUND BOX TY A (122311) W/APRON	EA	3	
628	504	ELEC SERV TY A (240/480)100(NS)GS(E)SP(U)	EA	1	
656	535	FND FOR RDWY ILL ASM (TY A)(30IN DR SH)	LF	18	

CONDUIT & CONDUCTOR RUNS

RUN	LENGTH	GROUND LENGTH (FEET)					CONDUCTOR NO & LENGTH (FEET)					CONDUIT (FEET)			
		12 BARE FT	8 BARE FT	6 BARE FT	4 BARE FT	2 BARE FT	10 XHHW FT	8 XHHW FT	6 XHHW FT	4 XHHW FT	2 XHHW FT	3/4" RM FT	2" RM FT	2" SCH 40 PVC FT	2" SCH 40 PVC BORED FT
D1	220		225					2-225						220	
D2	220		225					2-225						220	
D3	170		175					2-175							170
D4	50		55					2-55							50
D5	50		55					2-55						50	
			735					1470						490	220

THE SEAL APPEARING ON THIS DOCUMENT WAS AUTHORIZED BY CHARLES WILLIAM SVEC PE 57814, ON APRIL 18, 2003

STATE OF TEXAS CHARLES WILLIAM SVEC 57814 REGISTERED PROFESSIONAL ENGINEER

KBR
Engineered by KBR Technical Services, Inc

©2003 Texas Department of Transportation

IH 35
LOOP 20 TO UNIROYAL ROAD
ROADWAY LIGHTING LAYOUT
STA 215+00 TO STA 240+00

SHEET 3 OF 12

FED RD DIV NO	FEDERAL AID PROJECT NO	SHEET NO
6	NH-2002 (79)	746
STATE	STATE DIST	COUNTY
TEXAS	LAREDO	WEBB
CONT	SECT	JOB	HIGHWAY NO
0018	05	062, ETC	IH 35

REF FILE(S): j011op01.ill, ill LV ON = 1-63
j011op01.utl, utl LV ON = 1-63
REF FILE(S): j011op01.row, row LV ON = 1-22,24-63
j011op01.eop, eop LV ON = 1-11,13-17,19-63
j011op01.bck, bck LV ON = 2,9-10,14,17,21,25,28
j011op01.alg, alg LV ON = 1-6,35-39
j011op01.bdr, bdr LV ON = 17,45,57,58,60-62

b32rlp03.dgn-08 HOUFILE023 \hcivil\cf0130\ 4/17/2003

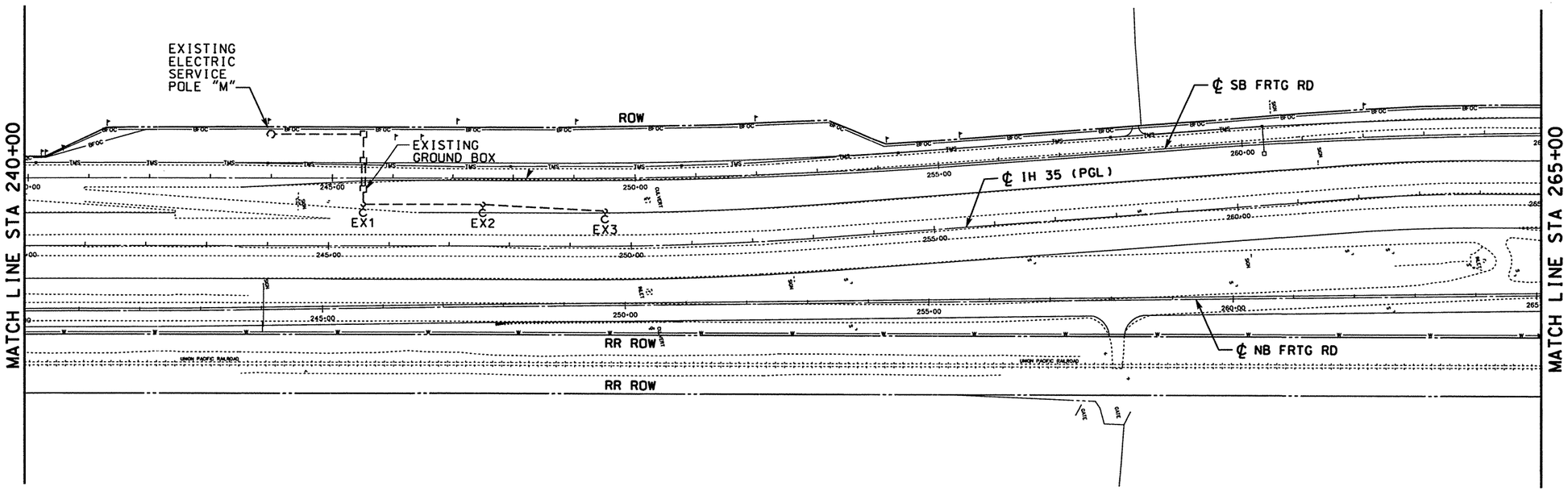

LEGEND

- RDWY ILL ASSEM (TY SA40T-8) (0.25 KW)S
- UNDERPASS LUMINAIRE
- ELECTRICAL SERVICE
- GROUND BOX, BELOW GRADE
- JUNCTION BOX, ABOVE GRADE
- NEMA 3R, HEAVY DUTY, 30A FUSED DISCONNECT
- (XX) CONDUCTOR IN CONDUIT AND CONDUIT PVC SCHD 40 BURIED, CONDUIT RUN NUMBER (SEE TABLE ON PLANS)
- (XX) CONDUCTOR IN CONDUIT AND CONDUIT BORE UNDER ROADWAY, CONDUIT RUN NUMBER (SEE TABLE ON PLANS)
- (XX) CONDUCTOR IN CONDUIT AND CONDUIT RIGID ABOVE GROUND, CONDUIT RUN NUMBER (SEE TABLE ON PLANS)

0 100 200
SCALE: 1" = 200'

STATE OF TEXAS
CHARLES WILLIAM SVEC
57814
REGISTERED PROFESSIONAL ENGINEER

THE SEAL APPEARING ON THIS DOCUMENT WAS AUTHORIZED BY CHARLES WILLIAM SVEC PE 57814, ON APRIL 18, 2003

KBR
Engineered by KBR Technical Services, Inc

©2003 Texas Department of Transportation

IH 35
LOOP 20 TO UNIROYAL ROAD
ROADWAY LIGHTING LAYOUT
STA 240+00 TO STA 265+00

SHEET 4 OF 12

FED RD DIV NO	FEDERAL AID PROJECT NO		SHEET NO
6	NH-2002 (79)		747
STATE	STATE DIST		COUNTY
TEXAS	LAREDO		WEBB
CONT	SECT	JOB	HIGHWAY NO
0018	05	062. ETC	IH 35

4/17/2003
HOUFILE023 \hcivil\cf0130\
b32rlp04.dgn-08

REF FILE(S): j011op01.bdr, bdr LV ON = 17,45,57,58,60-62
REF FILE(S): j011op01.alg, alg LV ON = 1-6,35-39
REF FILE(S): j011op01.bck, bck LV ON = 2,9-10,14,17,21,25,28
REF FILE(S): j011op01.eop, eop LV ON = 1-11,13-17,19-63
REF FILE(S): j011op01.row, row LV ON = 1-22,24-63
REF FILE(S): j011op01.ill, ill LV ON = 1-63
REF FILE(S): j011op01.uti, uti LV ON = 1-63

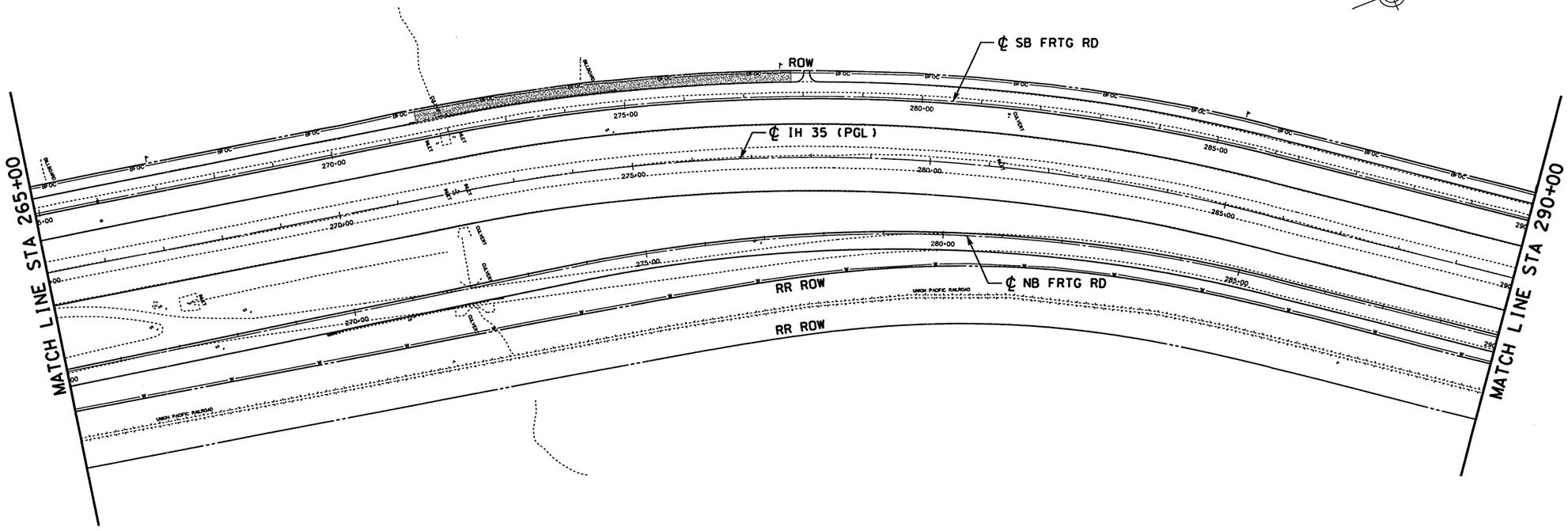

LEGEND

- RDWY ILL ASSEM (TY SA40T-8) (0.25 KW)S
- UNDERPASS LUMINAIRE
- ELECTRICAL SERVICE
- GROUND BOX, BELOW GRADE
- JUNCTION BOX, ABOVE GRADE
- NEMA 3R, HEAVY DUTY, 30A FUSED DISCONNECT
- (XX) CONDUCTOR IN CONDUIT AND CONDUIT PVC SCHD 40 BURIED, CONDUIT RUN NUMBER (SEE TABLE ON PLANS)
- (XX) CONDUCTOR IN CONDUIT AND CONDUIT BORE UNDER ROADWAY, CONDUIT RUN NUMBER (SEE TABLE ON PLANS)
- (XX) CONDUCTOR IN CONDUIT AND CONDUIT RIGID ABOVE GROUND, CONDUIT RUN NUMBER (SEE TABLE ON PLANS)

0 100 200
SCALE: 1" = 200'

STATE OF TEXAS
CHARLES WILLIAM SVEC
PE 57814
REGISTERED PROFESSIONAL ENGINEER

THE SEAL APPEARING ON THIS DOCUMENT WAS AUTHORIZED BY CHARLES WILLIAM SVEC PE 57814, ON APRIL 18, 2003

KBR
Engineered by KBR Technical Services, Inc

©2003 Texas Department of Transportation

IH 35
LOOP 20 TO UNIROYAL ROAD
ROADWAY LIGHTING LAYOUT
STA 265+00 TO STA 290+00
SHEET 5 OF 12

FED RD DIV NO	FEDERAL AID PROJECT NO		SHEET NO
6	NH-2002 (79)		748
STATE	STATE DIST		COUNTY
TEXAS	LAREDO		WEBB
CONT	SECT	JOB	HIGHWAY NO
0018	05	062, ETC	IH 35

REF FILE(S): j011op01.bdr, bdr LV ON = 17,45,57,58,60-62
j011op01.alg, alg LV ON = 1-6,35-39
j011op01.back, back LV ON = 2,9-10,14,17,21,25,28
j011op01.eop, eop LV ON = 1-11,13-17,19-63
milpoint.row, row LV ON = 1-22,24-63

REF FILE(S): j011op01.ill, ill LV ON = 1-63
j011op01.util, util LV ON = 1-63

b32rp05.dgn-10 HOUFILE023 \hcivil\cf0130\ 4/17/2003

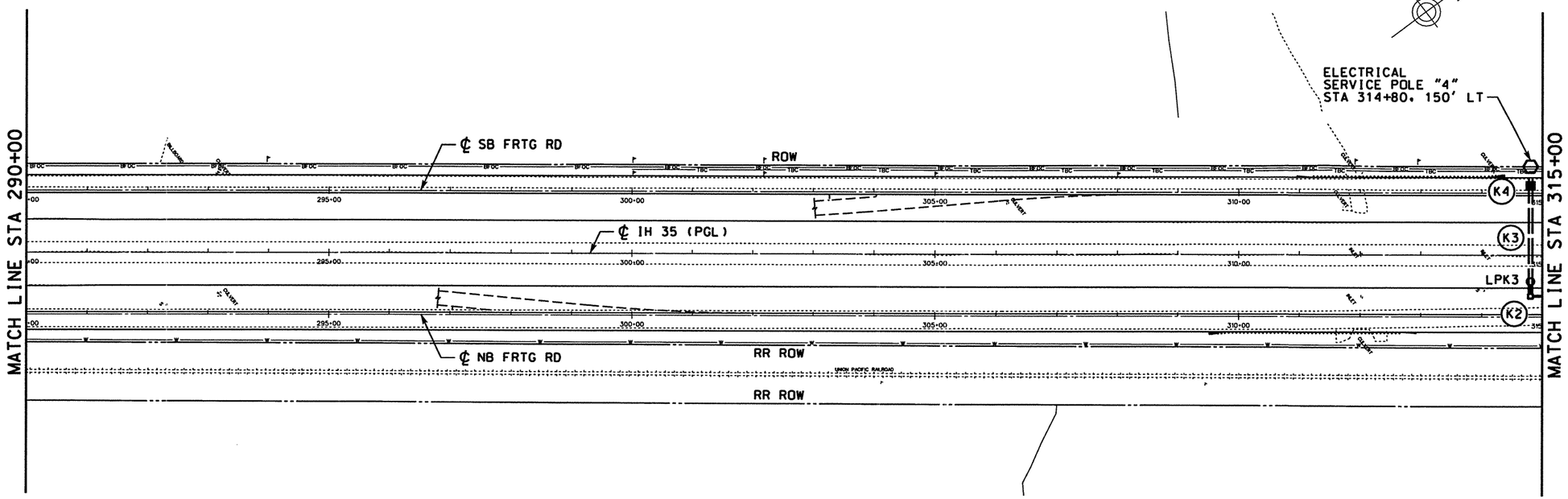

LEGEND

- RDWY ILL ASSEM (TY SA40T-8) (0.25 KW)S
- UNDERPASS LUMINAIRE
- ELECTRICAL SERVICE
- GROUND BOX, BELOW GRADE
- JUNCTION BOX, ABOVE GRADE
- NEMA 3R, HEAVY DUTY, 30A FUSED DISCONNECT
- (XX) CONDUCTOR IN CONDUIT AND CONDUIT PVC SCHD 40 BURIED, CONDUIT RUN NUMBER (SEE TABLE ON PLANS)
- (XX) CONDUCTOR IN CONDUIT AND CONDUIT BORE UNDER ROADWAY, CONDUIT RUN NUMBER (SEE TABLE ON PLANS)
- (XX) CONDUCTOR IN CONDUIT AND CONDUIT RIGID ABOVE GROUND, CONDUIT RUN NUMBER (SEE TABLE ON PLANS)

ROADWAY ILLUMINATION ASSEMBLY SUMMARY

STD NO	STATION NO	TYPE	SP-CKT	REMARK
LPK3	314+80	(TY SA40T-8)(0.25KW)S	4-K	70' RIGHT OF IH 35

SHEET SUMMARY

ITEM	DESC	DESCRIPTION	UNIT	EST QTY	FINAL QTY
610	503	RDWY ILL ASSEM (TY SA 40T-8)(.25 KW)S	EA		1
618	511	CONDUIT (PVC)(SCHD 40)(2")	LF		220
618	532	CONDUIT (PVC)(SCHD 40)(2")(BORE)	LF		210
620	503	ELEC CONDUCTOR (NO. 8)(BARE)	LF		445
620	509	ELEC CONDUCTOR (NO. 8)(INSULATION)	LF		890
624	501	GROUND BOX TY A (122311) W/APRON	EA		1
628	504	ELEC SERV TY A (240/480)100(NS)GS(E)SP(U)	EA		1
656	535	FND FOR RDWY ILL ASM (TY A)(30IN DR SH)	LF		6

CONDUIT & CONDUCTOR RUNS

RUN	LENGTH	GROUND LENGTH (FEET)					CONDUCTOR NO & LENGTH (FEET)					CONDUIT (FEET)			
		12 BARE	8 BARE	6 BARE	4 BARE	2 BARE	10 XHHW	8 XHHW	6 XHHW	4 XHHW	2 XHHW	3/4" RM	2" RM	2" SCH 40 PVC	2" SCH 40 PVC BORED
		FT	FT	FT	FT	FT	FT	FT	FT	FT	FT	FT	FT	FT	FT
K2	220		225					2-225						220	
K3	60		65					2-65							60
K4	150		155					2-155							150
			445					890						220	210

SCALE: 1" = 200'
0 100 200

STATE OF TEXAS
CHARLES WILLIAM SVEC
57814
REGISTERED PROFESSIONAL ENGINEER

THE SEAL APPEARING ON THIS DOCUMENT WAS AUTHORIZED BY CHARLES WILLIAM SVEC PE 57814, ON APRIL 18, 2003

KBR
Engineered by KBR Technical Services, Inc

©2003 Texas Department of Transportation

IH 35
LOOP 20 TO UNIROYAL ROAD
ROADWAY LIGHTING LAYOUT
STA 290+00 TO STA 315+00
SHEET 6 OF 12

FED RD DIV NO	FEDERAL AID PROJECT NO		SHEET NO
6	NH-2002 (79)		749
STATE	STATE DIST		COUNTY
TEXAS	LAREDO		WEBB
CONT	SECT	JOB	HIGHWAY NO
0018	05	062, ETC	IH 35

4/17/2003
HOUFILE023 \hcivil\cf0130\
b32rlp06.dgn-09

REF FILE(S): j0110p01.ill, ill LV ON = 1-63
j0110p01.utl, utl LV ON = 1-63
REF FILE(S): j0110p01.row, row LV ON = 1-22,24-63
j0110p01.eop, eop LV ON = 1-11,13-17,19-63
j0110p01.bck, bck LV ON = 2,9-10,14,17,21,25,28
j0110p01.alg, alg LV ON = 1-6,35-39
j0110p01.bdr, bdr LV ON = 17,45,57,58,60-62
milolnt.row, row

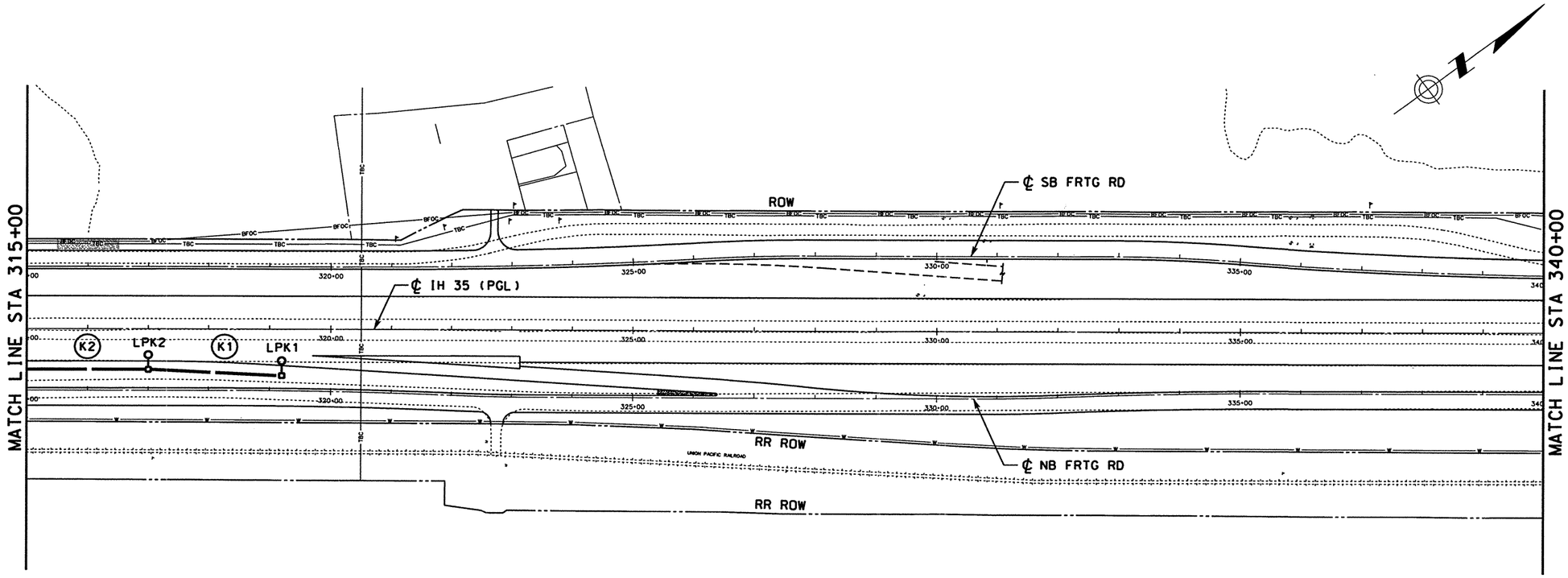

LEGEND

- RDWY ILL ASSEM (TY SA40T-8) (0.25 KW)S
- UNDERPASS LUMINAIRE
- ELECTRICAL SERVICE
- GROUND BOX, BELOW GRADE
- JUNCTION BOX, ABOVE GRADE
- NEMA 3R, HEAVY DUTY, 30A FUSED DISCONNECT
- (XX) CONDUCTOR IN CONDUIT AND CONDUIT PVC SCHD 40 BURIED, CONDUIT RUN NUMBER (SEE TABLE ON PLANS)
- (XX) CONDUCTOR IN CONDUIT AND CONDUIT BORE UNDER ROADWAY, CONDUIT RUN NUMBER (SEE TABLE ON PLANS)
- (XX) CONDUCTOR IN CONDUIT AND CONDUIT RIGID ABOVE GROUND, CONDUIT RUN NUMBER (SEE TABLE ON PLANS)

ROADWAY ILLUMINATION ASSEMBLY SUMMARY

STD NO	STATION NO	TYPE	SP-CKT	REMARK
LPK1	317+00	(TY SA40T-8)(0.25KW)S	4-K	70' RIGHT OF IH 35
LPK2	319+20	(TY SA40T-8)(0.25KW)S	4-K	80' RIGHT OF IH 35

SHEET SUMMARY

ITEM	DESC	DESCRIPTION	UNIT	EST QTY	FINAL QTY
610	503	RDWY ILL ASSEM (TY SA 40T-8)(.25 KW)S	EA	2	
618	511	CONDUIT (PVC)(SCHD 40)(2")	LF	220	
620	503	ELEC CONDUCTOR (NO. 8)(BARE)	LF	225	
620	509	ELEC CONDUCTOR (NO. 8)(INSULATION)	LF	450	
656	535	FND FOR RDWY ILL ASM (TY A)(30IN DR SH)	LF	12	

CONDUIT & CONDUCTOR RUNS

RUN	LENGTH	GROUND LENGTH (FEET)					CONDUCTOR NO & LENGTH (FEET)					CONDUIT (FEET)			
		12 BARE FT	8 BARE FT	6 BARE FT	4 BARE FT	2 BARE FT	10 XHHW FT	8 XHHW FT	6 XHHW FT	4 XHHW FT	2 XHHW FT	3/4" RM FT	2" RM FT	2" SCH 40 PVC FT	2" SCH 40 PVC BORED FT
K1	220		225					2-225						220	0
			225					450						220	0

0 100 200
SCALE: 1" = 200'

STATE OF TEXAS
CHARLES WILLIAM SVEC
57814
REGISTERED PROFESSIONAL ENGINEER

THE SEAL APPEARING ON THIS DOCUMENT WAS AUTHORIZED BY CHARLES WILLIAM SVEC PE 57814, ON APRIL 18, 2003

KBR
Engineered by KBR Technical Services, Inc

©2003 Texas Department of Transportation

IH 35
LOOP 20 TO UNIROYAL ROAD
ROADWAY LIGHTING LAYOUT
STA 315+00 TO STA 340+00

SHEET 7 OF 12

FED RD DIV NO	FEDERAL AID PROJECT NO		SHEET NO
6	NH-2002 (79)		750
STATE	STATE DIST		COUNTY
TEXAS	LAREDO		WEBB
CONT	SECT	JOB	HIGHWAY NO
0018	05	062, ETC	IH 35

REF FILE(S): j0110p01.ill, ill LV ON = 1-63
j0110p01.uti, uti LV ON = 1-63
REF FILE(S): j0110p01.bdr, bdr LV ON = 17.45.57.58.60-62
j0110p01.alg, alg LV ON = 1-6.35-39
j0110p01.bck, bck LV ON = 2.9-10.14.17.21.25.28
j0110p01.eop, eop LV ON = 1-11.13-17.19-63
milointr.row, row LV ON = 1-22.24-63

b32rlp07.dgn-10 HOUFILE023 \hciwilvcf0130\ 4/17/2003

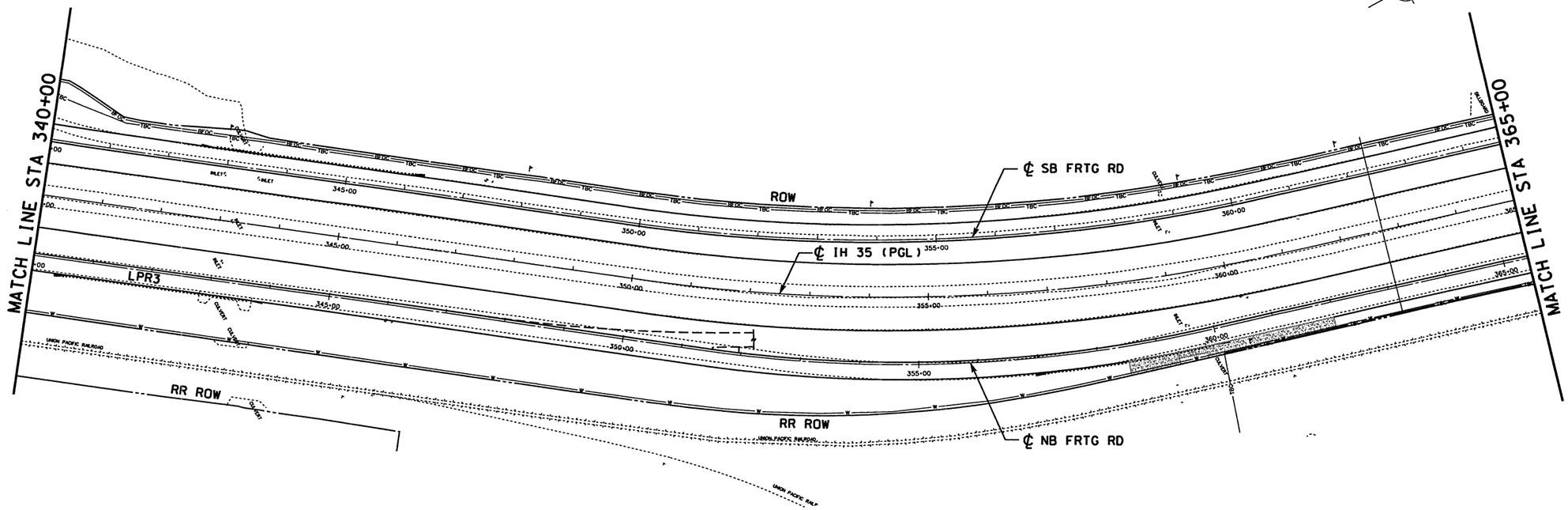

LEGEND

- RDWY ILL ASSEM (TY SA40T-8) (0.25 KW)S
- UNDERPASS LUMINAIRE
- ELECTRICAL SERVICE
- GROUND BOX, BELOW GRADE
- JUNCTION BOX, ABOVE GRADE
- NEMA 3R, HEAVY DUTY, 30A FUSED DISCONNECT
- (XX) CONDUCTOR IN CONDUIT AND CONDUIT PVC SCHD 40 BURIED, CONDUIT RUN NUMBER (SEE TABLE ON PLANS)
- (XX) CONDUCTOR IN CONDUIT AND CONDUIT BORE UNDER ROADWAY, CONDUIT RUN NUMBER (SEE TABLE ON PLANS)
- (XX) CONDUCTOR IN CONDUIT AND CONDUIT RIGID ABOVE GROUND, CONDUIT RUN NUMBER (SEE TABLE ON PLANS)

0 100 200
SCALE: 1" = 200'

STATE OF TEXAS
CHARLES WILLIAM SVEC
57814
REGISTERED PROFESSIONAL ENGINEER

THE SEAL APPEARING ON THIS DOCUMENT WAS AUTHORIZED BY CHARLES WILLIAM SVEC PE 57814, ON APRIL 18, 2003

KBR
Engineered by KBR Technical Services, Inc

©2003 Texas Department of Transportation

IH 35
LOOP 20 TO UNIROYAL ROAD
ROADWAY LIGHTING LAYOUT
STA 340+00 TO STA 365+00

SHEET 8 OF 12

FED RD DIV NO	FEDERAL AID PROJECT NO		SHEET NO
6	NH-2002 (79)		751
STATE	STATE DIST		COUNTY
TEXAS	LAREDO		WEBB
CONT	SECT	JOB	HIGHWAY NO
0018	05	062, ETC	IH 35

REF FILE(S): j011op01.ill, ill LV ON = 1-6,35-39
j011op01.utl, utl LV ON = 1-63
REF FILE(S): milolnt.row, row LV ON = 1-22,24-63
j011op01.eop, eop LV ON = 1-11,13-17,19-63
j011op01.bck, bck LV ON = 2,9-10,14,17,21,25,28
j011op01.alg, alg LV ON = 1-6,35-39
j011op01.bdr, bdr LV ON = 17,45,57,58,60-62

b32rlp08.dgn-10 HOUFILE023 \hcivil\cf0130\ 4/17/2003

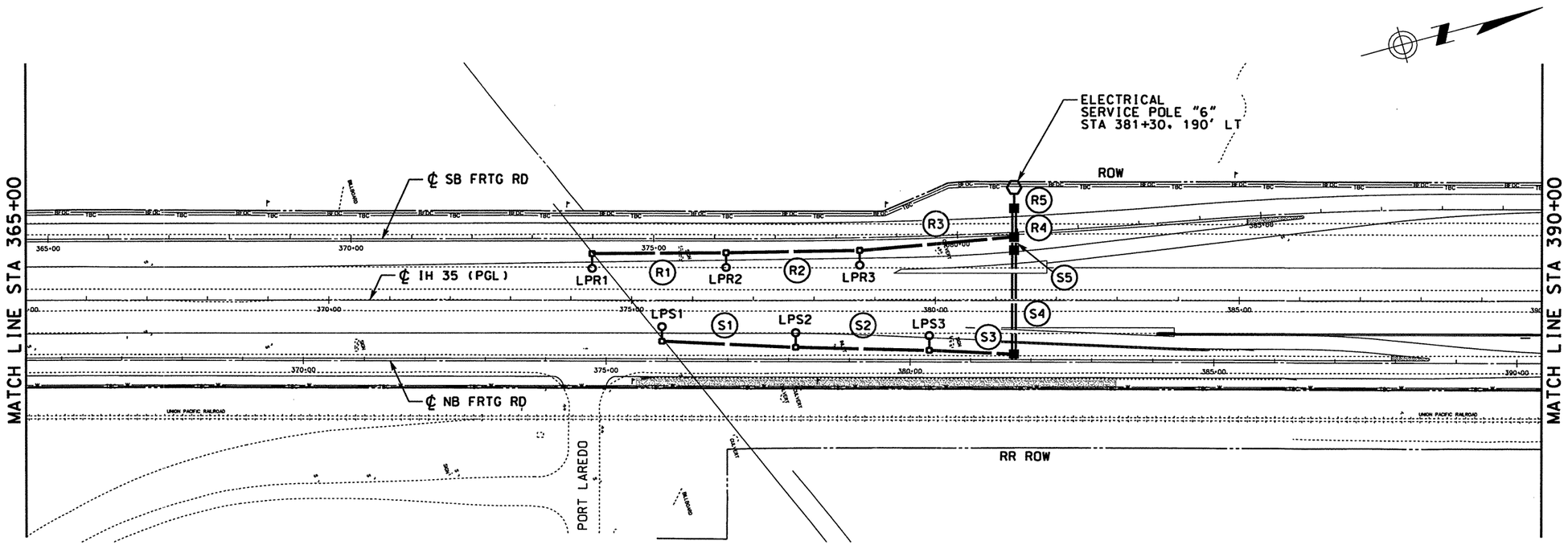

LEGEND

- RDWY ILL ASSEM (TY SA40T-8) (0.25 KW)S
- UNDERPASS LUMINAIRE
- ELECTRICAL SERVICE
- GROUND BOX, BELOW GRADE
- JUNCTION BOX, ABOVE GRADE
- NEMA 3R, HEAVY DUTY, 30A FUSED DISCONNECT
- (XX) CONDUCTOR IN CONDUIT AND CONDUIT PVC SCHD 40 BURIED, CONDUIT RUN NUMBER (SEE TABLE ON PLANS)
- (XX) CONDUCTOR IN CONDUIT AND CONDUIT BORE UNDER ROADWAY, CONDUIT RUN NUMBER (SEE TABLE ON PLANS)
- (XX) CONDUCTOR IN CONDUIT AND CONDUIT RIGID ABOVE GROUND, CONDUIT RUN NUMBER (SEE TABLE ON PLANS)

ROADWAY ILLUMINATION ASSEMBLY SUMMARY

STD NO	STATION NO	TYPE	SP-CKT	REMARK
LPR1	374+35	(TY SA40T-8)(0.25KW)S	6-R	79' LEFT OF IH 35
LPR2	376+55	(TY SA40T-8)(0.25KW)S	6-R	81' LEFT OF IH 35
LPR3	378+75	(TY SA40T-8)(0.25KW)S	6-R	85' LEFT OF IH 35
LPS1	375+50	(TY SA40T-8)(0.25KW)S	6-S	70' RIGHT OF IH 35
LPS2	377+70	(TY SA40T-8)(0.25KW)S	6-S	80' RIGHT OF IH 35
LPS3	379+90	(TY SA40T-8)(0.25KW)S	6-S	85' RIGHT OF IH 35

SHEET SUMMARY

ITEM	DESC	DESCRIPTION	UNIT	EST QTY	FINAL QTY
610	503	RDWY ILL ASSEM (TY SA 40T-8)(.25 KW)S	EA	6	
618	511	CONDUIT (PVC)(SCHD 40)(2")	LF	1325	
618	532	CONDUIT (PVC)(SCHD 40)(2")(BORE)	LF	220	
620	503	ELEC CONDUCTOR (NO. 8)(BARE)	LF	1545	
620	509	ELEC CONDUCTOR (NO. 8)(INSULATION)	LF	3360	
624	501	GROUND BOX TY A (122311) W/APRON	EA	4	
628	504	ELEC SERV TY A (240/480)100(NS)GS(E)SP(U)	EA	1	
656	535	FND FOR RDWY ILL ASM (TY A)(30IN DR SH)	LF	36	

CONDUIT & CONDUCTOR RUNS

RUN	LENGTH	GROUND LENGTH (FEET)					CONDUCTOR NO & LENGTH (FEET)					CONDUIT (FEET)			
		12 BARE FT	8 BARE FT	6 BARE FT	4 BARE FT	2 BARE FT	10 XHHW FT	8 XHHW FT	6 XHHW FT	4 XHHW FT	2 XHHW FT	3/4" RM FT	2" RM FT	2" SCH 40 PVC FT	2" SCH 40 PVC BORED FT
R1	220		225					2-225						220	
R2	220		225					2-225						220	
R3	260		265					2-265						260	
R4	40		45					4-45							40
R5	35		40					4-40						35	
S1	220		225					2-225						220	
S2	220		225					2-225						220	
S3	130		135					2-135						130	
S4	180		185					2-185							180
S5	20		25					2-25						20	
			1595					3360						1325	220

SCALE: 1" = 200'

STATE OF TEXAS — CHARLES WILLIAM SVEC 57814 — REGISTERED PROFESSIONAL ENGINEER

THE SEAL APPEARING ON THIS DOCUMENT WAS AUTHORIZED BY CHARLES WILLIAM SVEC PE 57814, ON APRIL 18, 2003

KBR
Engineered by KBR Technical Services, Inc

©2003 Texas Department of Transportation

IH 35
LOOP 20 TO UNIROYAL ROAD
ROADWAY LIGHTING LAYOUT
STA 365+00 TO STA 390+00

SHEET 9 OF 12

FED RD DIV NO	FEDERAL AID PROJECT NO		SHEET NO
6	NH-2002 (79)		752
STATE	STATE DIST		COUNTY
TEXAS	LAREDO		WEBB
CONT	SECT	JOB	HIGHWAY NO
0018	05	062, ETC	IH 35

4/17/2003
HOUFILE023 \hcivil\cf0130\
b32rlp09.dgn-10

REF FILE(S): j011cp01.ill, ill LV ON = 1-63
j011cp01.utl, utl LV ON = 1-63
REF FILE(S): j011cp01.eqp, eqp LV ON = 1-22,24-63
j011cp01.bck, bck LV ON = 1-11,13-17,19-63
j011cp01.dig, dig LV ON = 2,9-10,14,17,21,25,28
j011cp01.bdr, bdr LV ON = 1-6,35-39
mlinint.row, row LV ON = 17,45,57,58,60-62

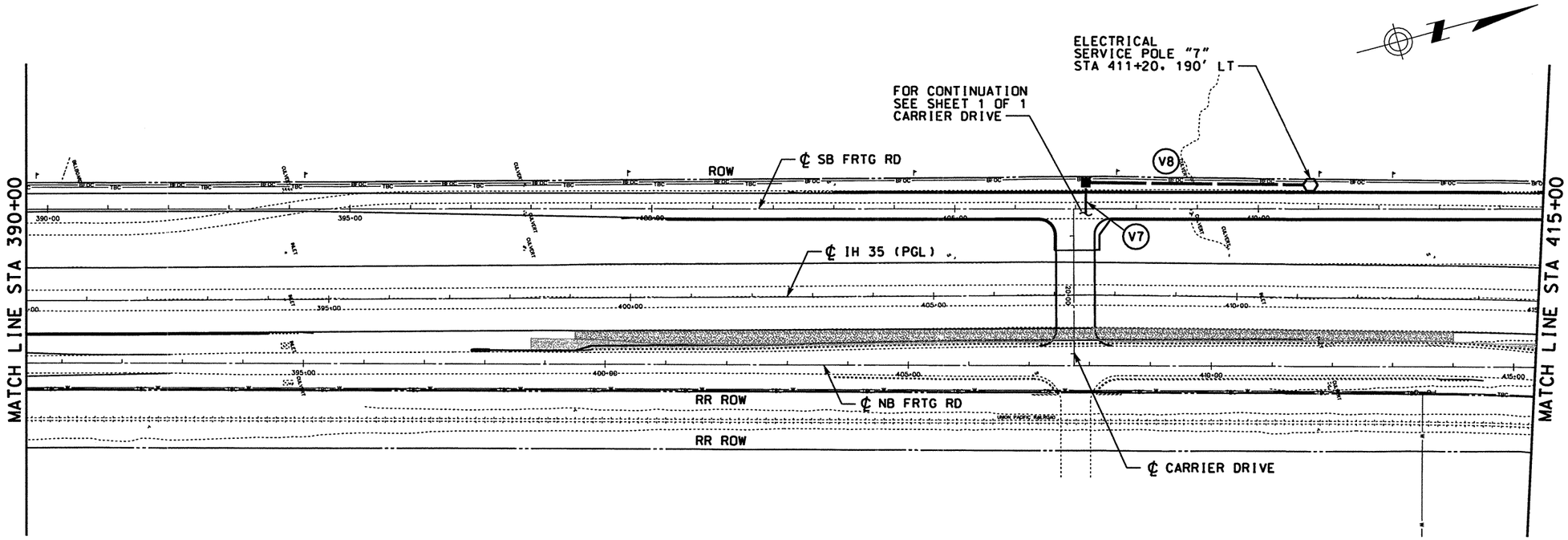

LEGEND

- RDWY ILL ASSEM (TY SA40T-8) (0.25 KW)S
- UNDERPASS LUMINAIRE
- ELECTRICAL SERVICE
- GROUND BOX, BELOW GRADE
- JUNCTION BOX, ABOVE GRADE
- NEMA 3R, HEAVY DUTY, 30A FUSED DISCONNECT
- (XX) CONDUCTOR IN CONDUIT AND CONDUIT PVC SCHD 40 BURIED, CONDUIT RUN NUMBER (SEE TABLE ON PLANS)
- (XX) CONDUCTOR IN CONDUIT AND CONDUIT BORE UNDER ROADWAY, CONDUIT RUN NUMBER (SEE TABLE ON PLANS)
- (XX) CONDUCTOR IN CONDUIT AND CONDUIT RIGID ABOVE GROUND, CONDUIT RUN NUMBER (SEE TABLE ON PLANS)

SHEET SUMMARY

ITEM	DESC	DESCRIPTION	UNIT	EST QTY	FINAL QTY
618	511	CONDUIT (PVC)(SCHD 40)(2")	LF	370	
620	503	ELEC CONDUCTOR (NO. 8)(BARE)	LF	375	
620	509	ELEC CONDUCTOR (NO. 8)(INSULATION)	LF	750	
624	501	GROUND BOX TY A (122311) W/APRON	EA	1	
628	504	ELEC SERV TY A (240/480)100(NS)GS(E)SP(U)	EA	1	

CONDUIT & CONDUCTOR RUNS

RUN	LENGTH	GROUND LENGTH (FEET)					CONDUCTOR NO & LENGTH (FEET)					CONDUIT (FEET)			
		12 BARE FT	8 BARE FT	6 BARE FT	4 BARE FT	2 BARE FT	10 XHHW FT	8 XHHW FT	6 XHHW FT	4 XHHW FT	2 XHHW FT	3/4" RM FT	2" RM FT	2" SCH 40 PVC FT	2" SCH 40 PVC BORED FT
V8	370		375					2-375						370	
			375					750						370	0

0 100 200
SCALE: 1" = 200'

STATE OF TEXAS
CHARLES WILLIAM SVEC
57814
REGISTERED PROFESSIONAL ENGINEER

THE SEAL APPEARING ON THIS DOCUMENT WAS AUTHORIZED BY CHARLES WILLIAM SVEC PE 57814, ON APRIL 18, 2003

KBR
Engineered by KBR Technical Services, Inc

©2003 Texas Department of Transportation

IH 35
LOOP 20 TO UNIROYAL ROAD
ROADWAY LIGHTING LAYOUT
STA 390+00 TO STA 415+00
SHEET 10 OF 12

FED RD DIV NO	FEDERAL AID PROJECT NO		SHEET NO
6	NH-2002 (79)		753
STATE	STATE DIST		COUNTY
TEXAS	LAREDO		WEBB
CONT	SECT	JOB	HIGHWAY NO
0018	05	062, ETC	IH 35

REF FILE(S): j01lop01.ill, ill LV ON = 1-63
j01lop01.uti, uti LV ON = 1-63
REF FILE(S): j01lop01.eop, eop LV ON = 1-22,24-63
j01lop01.bck, bck LV ON = 1-11,13-17,19-63
j01lop01.alg, alg LV ON = 2,9-10,14,17,21,25,28
j01lop01.bdr, bdr LV ON = 1-6,35-39
LV ON = 17,45,57,58,60-62
miloint.row, row LV ON = 1-22,24-63

b32rlp10.dgn-09 HOUFILE023 \hcivil\cf0130\ 4/17/2003

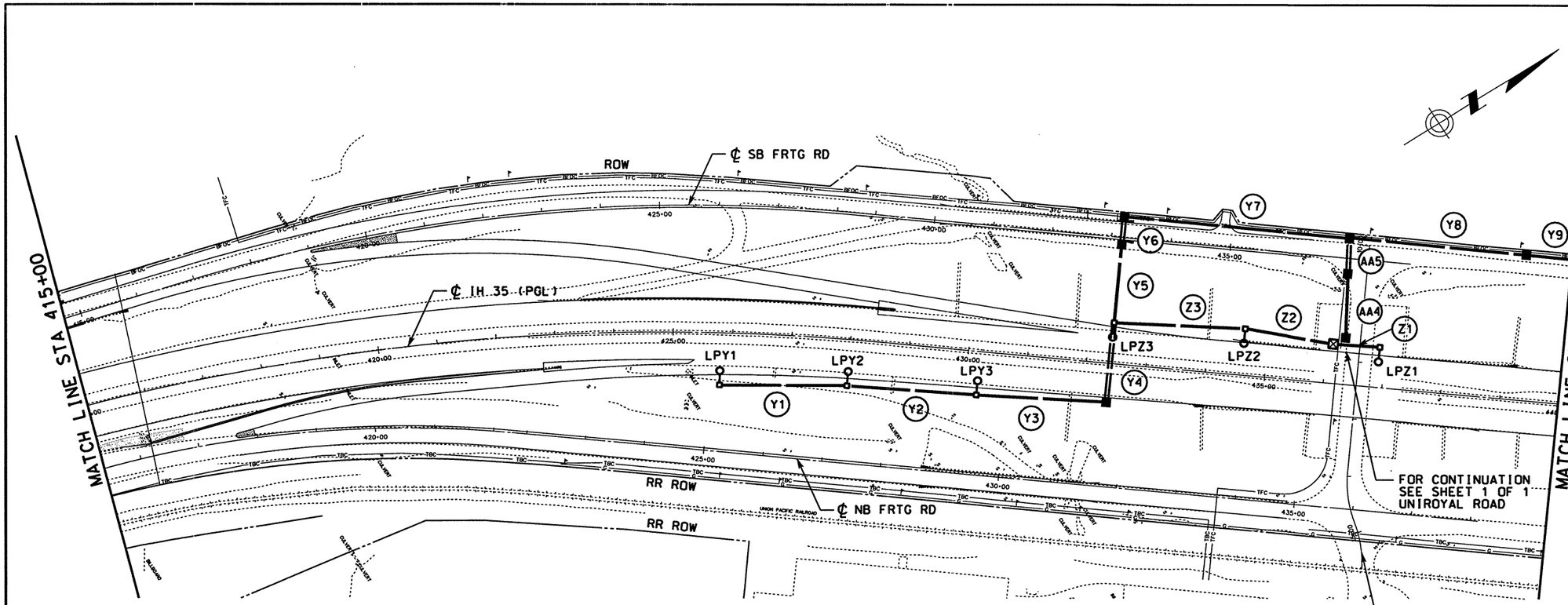

LEGEND

- RDWY ILL ASSEM (TY SA40T-8) (0.25 KW)S
- UNDERPASS LUMINAIRE
- ELECTRICAL SERVICE
- GROUND BOX, BELOW GRADE
- JUNCTION BOX, ABOVE GRADE
- NEMA 3R, HEAVY DUTY, 30A FUSED DISCONNECT
- (XX) CONDUCTOR IN CONDUIT AND CONDUIT PVC SCHD 40 BURIED, CONDUIT RUN NUMBER (SEE TABLE ON PLANS)
- (XX) CONDUCTOR IN CONDUIT AND CONDUIT BORE UNDER ROADWAY, CONDUIT RUN NUMBER (SEE TABLE ON PLANS)
- (XX) CONDUCTOR IN CONDUIT AND CONDUIT RIGID ABOVE GROUND, CONDUIT RUN NUMBER (SEE TABLE ON PLANS)

ROADWAY ILLUMINATION ASSEMBLY SUMMARY

STD NO	STATION NO	TYPE	SP-CKT	REMARK
LPY1	425+80	(TY SA40T-8)(0.25KW)S(TY3)	8-Y	90' RIGHT OF IH 35
LPY2	428+00	(TY SA40T-8)(0.25KW)S(TY3)	8-Y	80' RIGHT OF IH 35
LPY3	430+20	(TY SA40T-8)(0.25KW)S(TY3)	8-Y	80' RIGHT OF IH 35
LPZ1	436+90	(TY SA40T-8)(0.25KW)S(TY3)	8-Z	70' LEFT OF IH 35
LPZ2	434+60	(TY SA40T-8)(0.25KW)S(TY3)	8-Z	80' LEFT OF IH 35
LPZ3	432+40	(TY SA40T-8)(0.25KW)S(TY3)	8-Z	70' LEFT OF IH 35

SHEET SUMMARY

ITEM	DESC	DESCRIPTION	UNIT	EST QTY	FINAL QTY
610	503	RDWY ILL ASSEM (TY SA 40T-8)(.25 KW)S	EA	6	
618	505	CONDUIT (RM)(2")	LF	70	
618	511	CONDUIT (PVC)(SCHD 40)(2")	LF	2410	
618	532	CONDUIT (PVC)(SCHD 40)(2")(BORE)	LF	270	
620	503	ELEC CONDUCTOR (NO. 8)(BARE)	LF	2820	
620	509	ELEC CONDUCTOR (NO. 8)(INSULATION)	LF	9730	
624	501	GROUND BOX TY A (122311) W/APRON	EA	7	
656	535	FND FOR RDWY ILL ASM (TY A)(30IN DR SH)	LF	36	

CONDUIT & CONDUCTOR RUNS

RUN	LENGTH	GROUND LENGTH (FEET)					CONDUCTOR NO & LENGTH (FEET)					CONDUIT (FEET)			
		12 BARE	8 BARE	6 BARE	4 BARE	2 BARE	10 XHHW	8 XHHW	6 XHHW	4 XHHW	2 XHHW	3/4" RM	2" RM	2" SCH 40 PVC	2" SCH 40 PVC BORED
		FT	FT	FT	FT	FT	FT	FT	FT	FT	FT	FT	FT	FT	FT
Y1	220		225					2-225						220	
Y2	220		225					2-225						220	
Y3	220		225					2-225						220	
Y4	150		155					2-155							150
Y5	120		125					4-125						120	
Y6	50		55					4-55							50
Y7	400		405					4-405						400	
Y8	300		305					6-305						300	
Y9	420		425					6-425						420	
Z1	70		75					2-75					70		
Z2	160		165					2-165						160	
Z3	220		225					2-225						220	
AA4	130		135					2-135						130	
AA5	70		75					2-75							70
			2820					9730					70	2410	270

0 100 200
SCALE: 1" = 200'

STATE OF TEXAS
CHARLES WILLIAM SVEC
57814
REGISTERED PROFESSIONAL ENGINEER

THE SEAL APPEARING ON THIS DOCUMENT WAS AUTHORIZED BY CHARLES WILLIAM SVEC PE 57814, ON APRIL 18, 2003

KBR
Engineered by KBR Technical Services, Inc

©2003 Texas Department of Transportation

IH 35
LOOP 20 TO UNIROYAL ROAD
ROADWAY LIGHTING LAYOUT
STA 415+00 TO STA 440+00

SHEET 11 OF 12

FED RD DIV NO	FEDERAL AID PROJECT NO	SHEET NO
6	NH-2002 (79)	754
STATE	STATE DIST	COUNTY
TEXAS	LAREDO	WEBB
CONT / SECT	JOB	HIGHWAY NO
0018 / 05	062, ETC	IH 35

REF FILE(S): j0110p01.ill, ill LV ON = 1-63
j0110p01.ut1, ut1 LV ON = 1-63
REF FILE(S): j0110p01.row, row LV ON = 1-22,24-63
j0110p01.eop, eop LV ON = 1-11,13-17,19-63
j0110p01.bck, bck LV ON = 2,9-10,14,17,21,25,28
j0110p01.alg, alg LV ON = 1-6,35-39
j0110p01.bdr, bdr LV ON = 17,45,57,58,60-62

4/17/2003
HOUFILE023 \hcivil\c0130\
b32rlp11.dgn-09

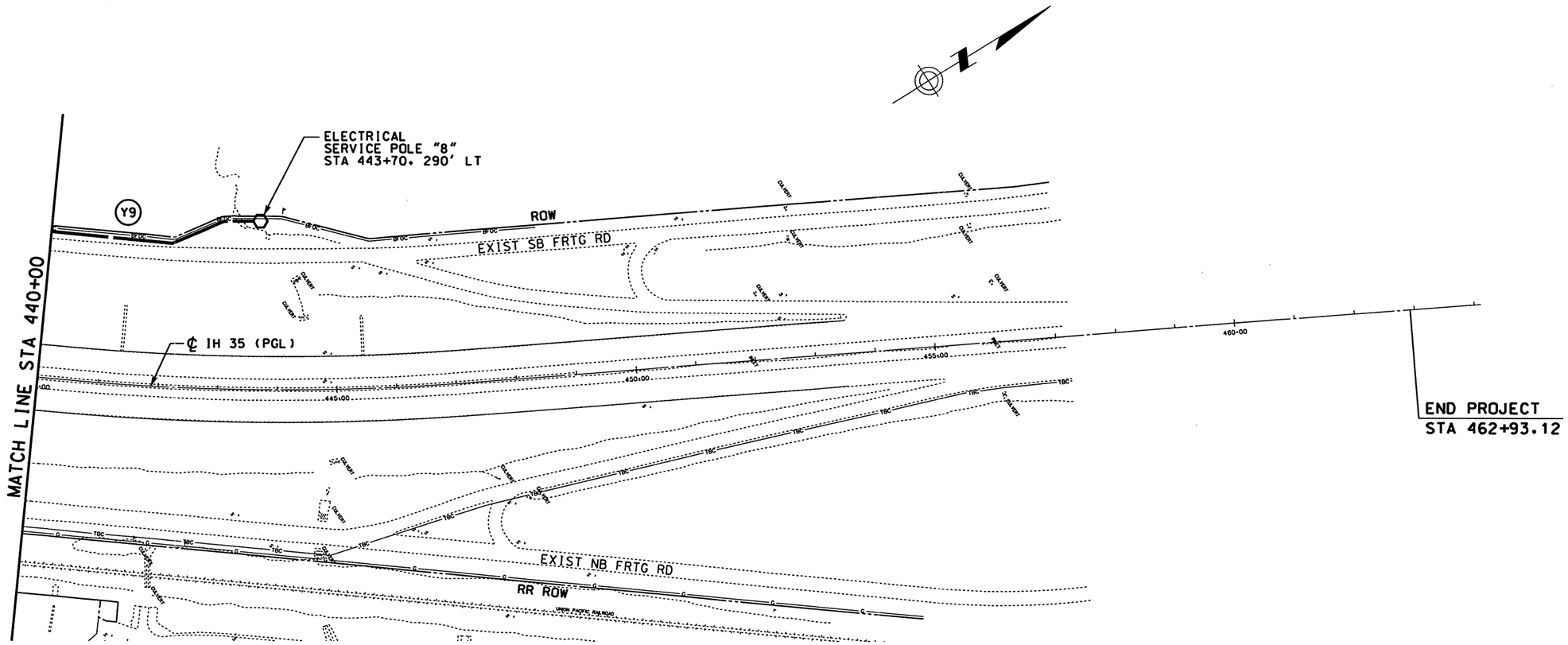

LEGEND

- RDWY ILL ASSEM (TY SA40T-8) (0.25 KW)S
- UNDERPASS LUMINAIRE
- ELECTRICAL SERVICE
- GROUND BOX, BELOW GRADE
- JUNCTION BOX, ABOVE GRADE
- NEMA 3R, HEAVY DUTY, 30A FUSED DISCONNECT
- (XX) CONDUCTOR IN CONDUIT AND CONDUIT PVC SCHD 40 BURIED, CONDUIT RUN NUMBER (SEE TABLE ON PLANS)
- (XX) CONDUCTOR IN CONDUIT AND CONDUIT BORE UNDER ROADWAY, CONDUIT RUN NUMBER (SEE TABLE ON PLANS)
- (XX) CONDUCTOR IN CONDUIT AND CONDUIT RIGID ABOVE GROUND, CONDUIT RUN NUMBER (SEE TABLE ON PLANS)

0 100 200
SCALE: 1" = 200'

SHEET SUMMARY

ITEM	DESC	DESCRIPTION	UNIT	EST QTY	FINAL QTY
628	503	ELEC SERV TY A (240/480)060(NS)GS(E)SP(U)	EA	1	

STATE OF TEXAS
CHARLES WILLIAM SVEC
57814
REGISTERED PROFESSIONAL ENGINEER

THE SEAL APPEARING ON THIS DOCUMENT WAS AUTHORIZED BY CHARLES WILLIAM SVEC PE 57814, ON APRIL 18, 2003

KBR
Engineered by KBR Technical Services, Inc

©2003 Texas Department of Transportation

IH 35
LOOP 20 TO UNIROYAL ROAD
ROADWAY LIGHTING LAYOUT
STA 440+00 TO STA 455+00

SHEET 12 OF 12

FED RD DIV NO	FEDERAL AID PROJECT NO		SHEET NO
6	NH-2002 (79)		755
STATE	STATE DIST		COUNTY
TEXAS	LAREDO		WEBB
CONT	SECT	JOB	HIGHWAY NO
0018	05	062, ETC	IH 35

REF FILE(S): j01lop01.ill, ill LV ON = 1-63
j01lop01.utl, utl LV ON = 1-63

REF FILE(S): j01lop01.bdr, bdr LV ON = 17,45,57,58,60-62
j01lop01.alg, alg LV ON = 1-6,35-39
j01lop01.bck, bck LV ON = 2,9-10,14,17,21,25,28
j01lop01.eop, eop LV ON = 1-11,13-17,19-63
miloint.row, row LV ON = 1-22,24-63

b32rlp12.dgn-09 HOUFILE023 \hcivil\cf0130\ 4/17/2003

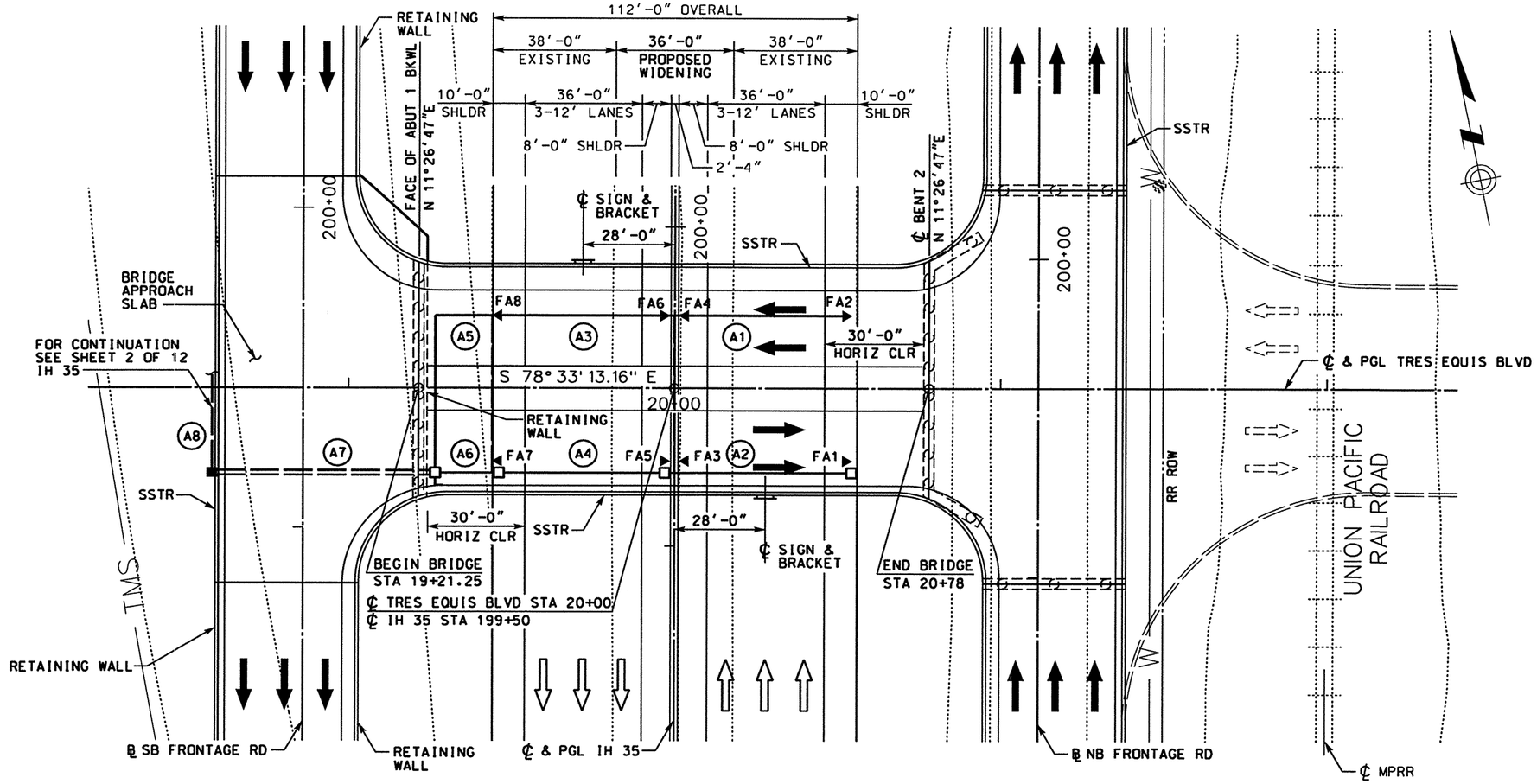

LEGEND

- RDWY ILL ASSEM (TY SA40T-8) (0.25 KW)S
- UNDERPASS LUMINAIRE
- ELECTRICAL SERVICE
- GROUND BOX, BELOW GRADE
- JUNCTION BOX, ABOVE GRADE
- NEMA 3R, HEAVY DUTY, 30A FUSED DISCONNECT
- (XX) CONDUCTOR IN CONDUIT AND CONDUIT PVC SCHD 40 BURIED, CONDUIT RUN NUMBER (SEE TABLE ON PLANS)
- (XX) CONDUCTOR IN CONDUIT AND CONDUIT BORE UNDER ROADWAY, CONDUIT RUN NUMBER (SEE TABLE ON PLANS)
- (XX) CONDUCTOR IN CONDUIT AND CONDUIT RIGID ABOVE GROUND, CONDUIT RUN NUMBER (SEE TABLE ON PLANS)

NOTES:

1. 30A FUSED DISCONNECTED SWITCH SHALL HAVE 15 AMP FUSE.

ROADWAY ILLUMINATION ASSEMBLY SUMMARY

STD NO	STATION NO	TYPE	SP-CKT	REMARK
FA1	199+25	RDWY ILL ASM U/P (TY IF)(.15KW)	1-A	57' RIGHT OF IH 35
FA2	199+75	RDWY ILL ASM U/P (TY IF)(.15KW)	1-A	57' RIGHT OF IH 35
FA3	199+25	RDWY ILL ASM U/P (TY IF)(.15KW)	1-A	CENTER OF IH 35
FA4	199+75	RDWY ILL ASM U/P (TY IF)(.15KW)	1-A	CENTER OF IH 35
FA5	199+25	RDWY ILL ASM U/P (TY IF)(.15KW)	1-A	CENTER OF IH 35
FA6	199+75	RDWY ILL ASM U/P (TY IF)(.15KW)	1-A	CENTER OF IH 35
FA7	199+25	RDWY ILL ASM U/P (TY IF)(.15KW)	1-A	57' LEFT OF IH 35
FA8	199+75	RDWY ILL ASM U/P (TY IF)(.15KW)	1-A	57' LEFT OF IH 35

SHEET SUMMARY

ITEM	DESC	DESCRIPTION	UNIT	EST QTY	FINAL QTY
610	655	RDWY ILL ASM U/P (TY IF)(.15KW)	EA	8	
618	501	CONDUIT (RM)(3/4")	LF	305	
618	532	CONDUIT (PVC)(SCHD 40)(2")(BORE)	LF	70	
620	501	ELEC CONDUCTOR (NO. 12)(BARE)	LF	335	
620	503	ELEC CONDUCTOR (NO. 8)(BARE)	LF	75	
620	508	ELEC CONDUCTOR (NO. 10)(INSULATION)	LF	670	
620	509	ELEC CONDUCTOR (NO. 8)(INSULATION)	LF	150	

CONDUIT & CONDUCTOR RUNS

RUN	LENGTH	GROUND LENGTH (FEET)					CONDUCTOR NO & LENGTH (FEET)					CONDUIT (FEET)			
		12 BARE FT	8 BARE FT	6 BARE FT	4 BARE FT	2 BARE FT	10 XHHW FT	8 XHHW FT	6 XHHW FT	4 XHHW FT	2 XHHW FT	3/4" RM FT	2" RM FT	2" SCH 40 PVC FT	2" SCH 40 PVC BORED FT
A1	57	62					2-62					57			
A2	57	62					2-62					57			
A3	57	62					2-62					57			
A4	57	62					2-62					57			
A5	67	72					2-72					67			
A6	10	15					2-15					10			
A7	70		75					2-75							70
		335	75				670	150				305			70

0 20 40
SCALE: 1" = 40'

STATE OF TEXAS CHARLES WILLIAM SVEC 57814 REGISTERED PROFESSIONAL ENGINEER

THE SEAL APPEARING ON THIS DOCUMENT WAS AUTHORIZED BY CHARLES WILLIAM SVEC PE 57814, ON APRIL 18, 2003

KBR
Engineered by KBR Technical Services, Inc

©2003 Texas Department of Transportation

IH 35
LOOP 20 TO UNIROYAL ROAD
ROADWAY LIGHTING LAYOUT
TRES EQUIS BLVD

SHEET 1 OF 1

FED RD DIV NO	FEDERAL AID PROJECT NO	SHEET NO
6	NH-2002 (79)	756
STATE	STATE DIST	COUNTY
TEXAS	LAREDO	WEBB
CONT	SECT / JOB	HIGHWAY NO
0018	05 / 062, ETC	IH 35

REF FILE(S): j01lqq01.bnt, bnt LV ON = 1-63
REF FILE(S): j01lqq01.row, row LV ON = 1-22,25-63
REF FILE(S): j01lqq01.utl, utl LV ON = 1-63
j01lqq01.eop, eop LV ON = 1-17,19-63
j01lqq01.bck, bck LV ON = 2,9,10,14,17,20,21,25,28
j01lqq01.alg, alg LV ON = 1-6,25-29
j01lqq01.bdr, bdr LV ON = 18,45,57,58,60-62
b32rlp14.dgn-09 HOUFILE023 \hcivil\cf0130\ 4/17/2003

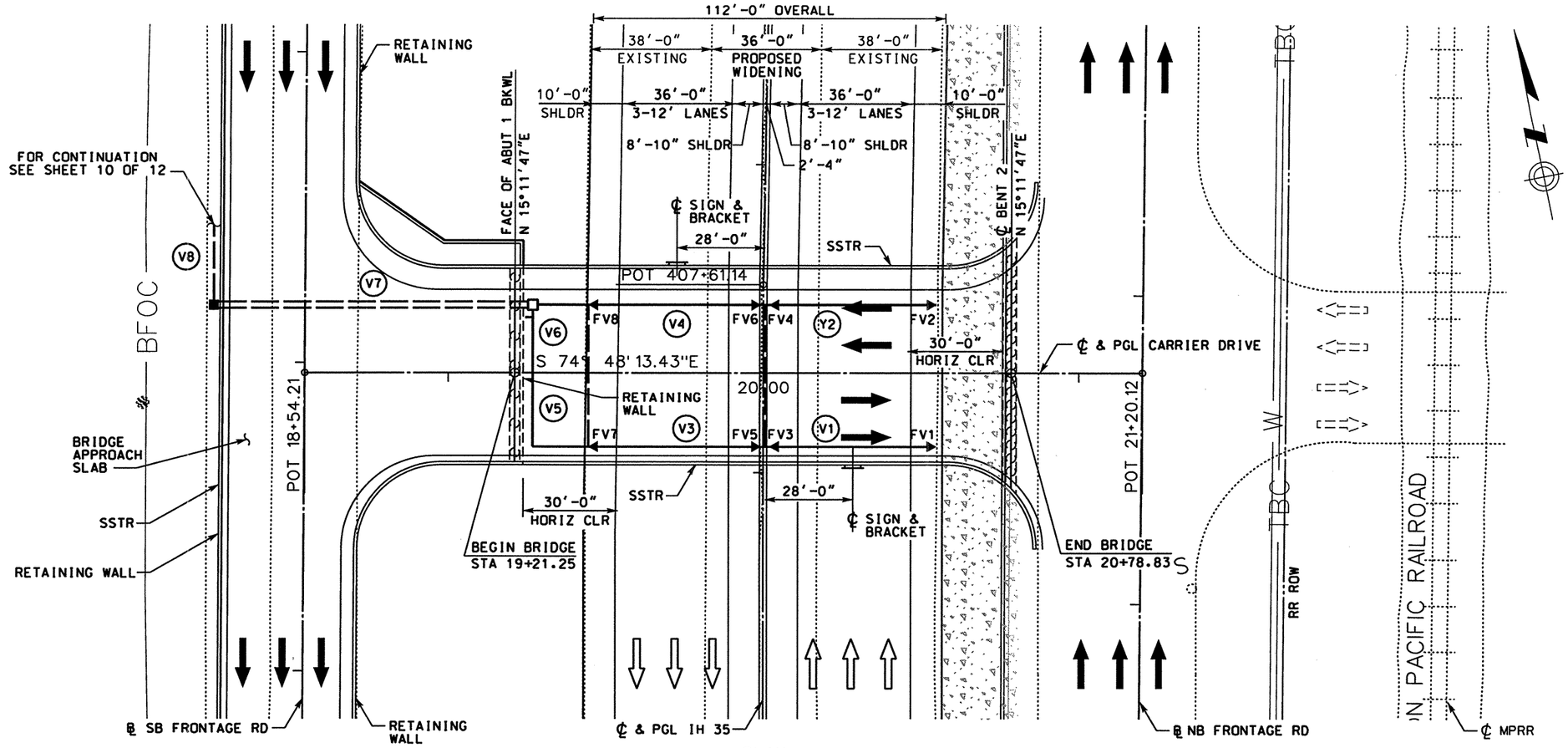

PLAN

LEGEND

- RDWY ILL ASSEM (TY SA40T-8) (0.25 KW)S
- UNDERPASS LUMINAIRE
- ELECTRICAL SERVICE
- GROUND BOX, BELOW GRADE
- JUNCTION BOX, ABOVE GRADE
- NEMA 3R, HEAVY DUTY, 30A FUSED DISCONNECT
- (XX) CONDUCTOR IN CONDUIT AND CONDUIT PVC SCHD 40 BURIED. CONDUIT RUN NUMBER (SEE TABLE ON PLANS)
- (XX) CONDUCTOR IN CONDUIT AND CONDUIT BORE UNDER ROADWAY. CONDUIT RUN NUMBER (SEE TABLE ON PLANS)
- (XX) CONDUCTOR IN CONDUIT AND CONDUIT RIGID ABOVE GROUND. CONDUIT RUN NUMBER (SEE TABLE ON PLANS)

NOTES:

1. 30A FUSED DISCONNECTED SWITCH ~~SHALL~~ HAVE 15 AMP FUSE.

ROADWAY ILLUMINATION ASSEMBLY SUMMARY

STD NO	STATION NO	TYPE	SP-CKT	REMARK
FV1	407+00	RDWY ILL ASM U/P (TY IF)(.15KW)	7-V	57' RIGHT OF IH 35
FV2	407+50	RDWY ILL ASM U/P (TY IF)(.15KW)	7-V	57' RIGHT OF IH 35
FV3	407+00	RDWY ILL ASM U/P (TY IF)(.15KW)	7-V	CENTER OF IH 35
FV4	407+50	RDWY ILL ASM U/P (TY IF)(.15KW)	7-V	CENTER OF IH 35
FV5	407+00	RDWY ILL ASM U/P (TY IF)(.15KW)	7-V	CENTER OF IH 35
FV6	407+50	RDWY ILL ASM U/P (TY IF)(.15KW)	7-V	CENTER OF IH 35
FV7	407+00	RDWY ILL ASM U/P (TY IF)(.15KW)	7-V	57' LEFT OF IH 35
FV8	407+50	RDWY ILL ASM U/P (TY IF)(.15KW)	7-V	57' LEFT OF IH 35

SHEET SUMMARY

ITEM	DESC	DESCRIPTION	UNIT	EST QTY	FINAL QTY
610	655	RDWY ILL ASM U/P (TY IF)(.15KW)	EA	8	
618	501	CONDUIT (RM)(3/4")	LF	305	
618	532	CONDUIT (PVC)(SCHD 40)(2")(BORE)	LF	100	
620	501	ELEC CONDUCTOR (NO. 12)(BARE)	LF	335	
620	503	ELEC CONDUCTOR (NO. 8)(BARE)	LF	105	
620	508	ELEC CONDUCTOR (NO. 10)(INSULATION)	LF	670	
620	509	ELEC CONDUCTOR (NO. 8)(INSULATION)	LF	210	

CONDUIT & CONDUCTOR RUNS

RUN	LENGTH	GROUND LENGTH (FEET)					CONDUCTOR NO & LENGTH (FEET)					CONDUIT (FEET)			
		12 BARE	8 BARE	6 BARE	4 BARE	2 BARE	10 XHHW	8 XHHW	6 XHHW	4 XHHW	2 XHHW	3/4" RM	2" RM	2" SCH 40 PVC	2" SCH 40 PVC BORED
		FT	FT	FT	FT	FT	FT	FT	FT	FT	FT	FT	FT	FT	FT
V1	57	62					2-62					57			
V2	57	62					2-62					57			
V3	57	62					2-62					57			
V4	57	62					2-62					57			
V5	67	72					2-72					67			
V6	10	15					2-15					10			
V7	100		105					2-105							100
		335	105				670	210				305			100

0 20 40
SCALE: 1" = 40'

STATE OF TEXAS — CHARLES WILLIAM SVEC — P.E. 57814 — REGISTERED PROFESSIONAL ENGINEER

THE SEAL APPEARING ON THIS DOCUMENT WAS AUTHORIZED BY CHARLES WILLIAM SVEC PE 57814, ON APRIL 18, 2003

KBR

Engineered by KBR Technical Services, Inc

©2003 Texas Department of Transportation

IH 35
LOOP 20 TO UNIROYAL ROAD
ROADWAY LIGHTING
LAYOUT
CARRIER DRIVE

SHEET 1 OF 1

FED RD DIV NO	FEDERAL AID PROJECT NO		SHEET NO
6	NH-2002 (79)		757
STATE	STATE DIST		COUNTY
TEXAS	LAREDO		WEBB
CONT	SECT	JOB	HIGHWAY NO
0018	05	062. ETC	IH 35

REF FILE(S): j011aq01.bnt. bnt LV ON = 1-63
mlloint.row . row LV ON = 1-22.25-63

j011aq01.utl. utl LV ON = 1-63
j011aq01.eop. eop LV ON = 1-17.19-63
j011aq01.bck. bck LV ON = 2.9.10.14.17.20.21.25.28
j011aq01.alg. alg LV ON = 1-6.25-29
j011aq01.bdr. bdr LV ON = 18.45.57.58.60-62

REF FILE(S): j011aq01.bnt. bnt LV ON = 1-63
j011aq01.row . row LV ON = 1-22.25-63

b32rlp15.dgn-07 HOUFILE023 \hcivil\cf0130\ 4/17/2003

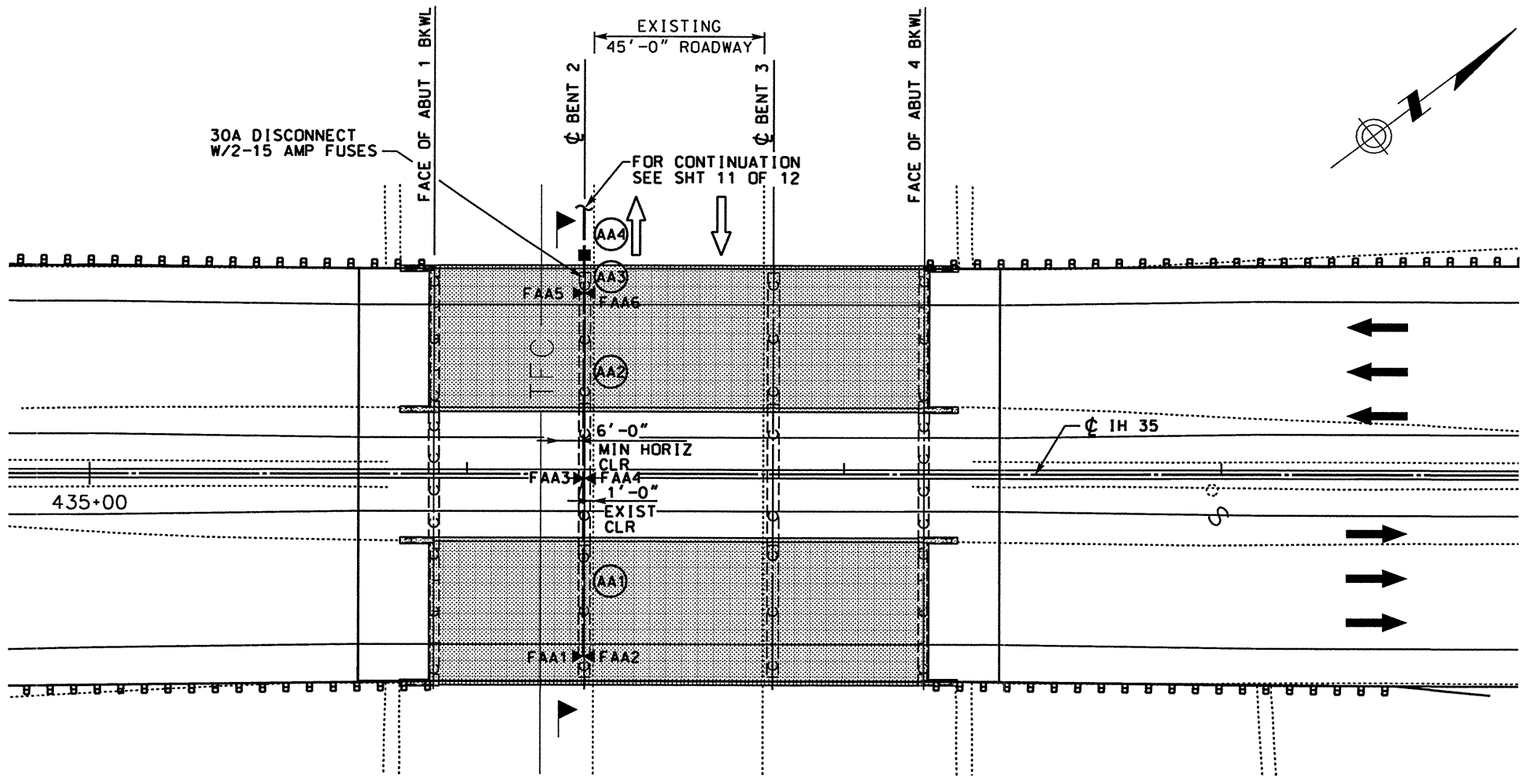

LEGEND

- RDWY ILL ASSEM (TY SA40T-8) (0.25 KW)S
- UNDERPASS LUMINAIRE
- ELECTRICAL SERVICE
- GROUND BOX, BELOW GRADE
- JUNCTION BOX, ABOVE GRADE
- NEMA 3R, HEAVY DUTY, 30A FUSED DISCONNECT
- (XX) CONDUCTOR IN CONDUIT AND CONDUIT PVC SCHD 40 BURIED, CONDUIT RUN NUMBER (SEE TABLE ON PLANS)
- (XX) CONDUCTOR IN CONDUIT AND CONDUIT BORE UNDER ROADWAY, CONDUIT RUN NUMBER (SEE TABLE ON PLANS)
- (XX) CONDUCTOR IN CONDUIT AND CONDUIT RIGID ABOVE GROUND, CONDUIT RUN NUMBER (SEE TABLE ON PLANS)

NOTES:

1. 30A FUSED DISCONNECT SWITCH WITH 15 AMP FUSES.

ROADWAY ILLUMINATION ASSEMBLY SUMMARY

STD NO	STATION NO	TYPE	SP-CKT	REMARK
FAA1	436+30.5	RDWY ILL ASM U/P (TY IF)(.15KW)	8-AA	50' RIGHT OF IH 35
FAA2	436+33.5	RDWY ILL ASM U/P (TY IF)(.15KW)	8-AA	50' RIGHT OF IH 35
FAA3	436+30.5	RDWY ILL ASM U/P (TY IF)(.15KW)	8-AA	CENTER OF IH 35
FAA4	436+33.5	RDWY ILL ASM U/P (TY IF)(.15KW)	8-AA	CENTER OF IH 35
FAA5	436+30.5	RDWY ILL ASM U/P (TY IF)(.15KW)	8-AA	50' LEFT OF IH 35
FAA6	436+33.5	RDWY ILL ASM U/P (TY IF)(.15KW)	8-AA	50' LEFT OF IH 35

SHEET SUMMARY

ITEM	DESC	DESCRIPTION	UNIT	EST QTY	FINAL QTY
610	655	RDWY ILL ASM U/P (TY IF)(.15KW)	EA	6	
618	501	CONDUIT (RM)(3/4")	LF	100	
618	505	CONDUIT (RM)(2")	LF	20	
620	501	ELEC CONDUCTOR (NO. 12)(BARE)	LF	110	
620	503	ELEC CONDUCTOR (NO. 8)(BARE)	LF	25	
620	508	ELEC CONDUCTOR (NO. 10)(INSULATION)	LF	220	
620	509	ELEC CONDUCTOR (NO. 8)(INSULATION)	LF	50	

CONDUIT & CONDUCTOR RUNS

RUN	LENGTH	GROUND LENGTH (FEET)					CONDUCTOR NO & LENGTH (FEET)					CONDUIT (FEET)			
		12 BARE FT	8 BARE FT	6 BARE FT	4 BARE FT	2 BARE FT	10 XHHW FT	8 XHHW FT	6 XHHW FT	4 XHHW FT	2 XHHW FT	3/4" RM FT	2" RM FT	2" SCH 40 PVC FT	2" SCH 40 PVC BORED FT
AA1	50	55					2-55					50			
AA2	50	55					2-55					50			
AA3	20		25					2-25					20		
		110	25				220	50				100	20		

0 20 40
SCALE: 1" = 40'

STATE OF TEXAS
CHARLES WILLIAM SVEC
P.E. 57814
REGISTERED PROFESSIONAL ENGINEER

THE SEAL APPEARING ON THIS DOCUMENT WAS AUTHORIZED BY CHARLES WILLIAM SVEC PE 57814, ON APRIL 18, 2003

KBR
Engineered by KBR Technical Services, Inc

©2003 Texas Department of Transportation

IH 35
LOOP 20 TO UNIROYAL ROAD
ROADWAY LIGHTING
LAYOUT
UNIROYAL ROAD

SHEET 1 OF 1

FED RD DIV NO	FEDERAL AID PROJECT NO	SHEET NO
6	NH-2002 (79)	758
STATE	STATE DIST	COUNTY
TEXAS	LAREDO	WEBB
CONT / SECT / JOB		HIGHWAY NO
0018 / 05 / 062, ETC		IH 35

REF FILE(S): j0110p01.utl, utl LV ON = 1-63
j0110p01.eop, eop LV ON = 1-12,14-17,19-63
j0110p01.bck, bck LV ON = 2,9,10,14,17,20,21,25,28
j0110p01.alg, alg LV ON = 2-6,25,26,28,29
j0110p01.bdr, bdr LV ON = 18,45,57,58,60-62
REF FILE(S): j0110p01.bnt, bnt LV ON = 1-17,19-63
milointi.row, row LV ON = 1-22,25-63

4/17/2003 \hcivil\cf0130\ HOUFILE023 b32rlp13.dgn-08

SERVICE POLE DESCRIPTION

ELEC SERVICE NO	SHEET NO	ELECTRICAL SERVICE DESCRIPTION (SEE ED (4)-00)	SERVICE CONDUIT SIZE	SERVICE CONDUCTORES NO/SIZE	SAFETY SWITCH AMPS	MAIN SWITCH		TWO-POLE CONTRACTOR AMPS	PANEL BD/ LOAD CENTER AMP RATING	CIRCUIT NO	BRANCH CKT BKR POLE/AMPS	BRANCH CIRCUIT AMPS	KVA LOAD
						SWITCH AMP/FUSE	CKT BKR POLE/AMPS						
1	1	ELEC SERV TY A(240/480)100(NS)GS(E)SP(U)	1 1/2"	3/#2	N/A	N/A	2P/100	100	N/A	A	1P/15	7.2	1.7
										B	2P/40	0	
										C	2P/40	0	
2	3	ELEC SERV TY A(240/480)100(NS)GS(E)SP(U)	1 1/2"	3/#2	N/A	N/A	2P/100	100	N/A	D	2P/15	2.3	1.1
										E	2P/40	0	
										F	2P/40	0	
4	6	ELEC SERV TY A(240/480)100(NS)GS(E)SP(U)	1 1/2"	3/#2	N/A	N/A	2P/100	100	N/A	K	2P/15	2.3	1.1
										L	2P/40	0	
										M	2P/40	0	
6	9	ELEC SERV TY A(240/480)100(NS)GS(E)SP(U)	1 1/2"	3/#2	N/A	N/A	2P/100	100	N/A	R	2P/15	2.3	2.2
										S	2P/15	2.3	
										T	2P/40	0	
										U	2P/40	0	
7	10	ELEC SERV TY A(240/480)100(NS)GS(E)SP(U)	1 1/2"	3/#2	N/A	N/A	2P/100	100	N/A	V	1P/15	7.2	1.7
										W	2P/40	0	
										X	2P/40	0	
8	12	ELEC SERV TY A(240/480)060(NS)GS(E)SP(U)	1 1/2"	3/#2	N/A	N/A	2P/100	100	N/A	Y	2P/15	2.3	3.4
										Z	2P/15	2.3	
										AA	1P/15	5.0	

NOTE:

1. THE SERVICE POLES DESIGN AND LOCATION ARE DESIGN FOR FEEDING FUTURE HIGH MAST LIGHTING SYSTEM.
2. CIRCUITS A, V AND AA ARE 240 VOLTS. ALL THE OTHER CIRCUITS ARE 480 VOLTS.

STATE OF TEXAS
CHARLES WILLIAM SVEC
57814
REGISTERED PROFESSIONAL ENGINEER

THE SEAL APPEARING ON THIS DOCUMENT WAS AUTHORIZED BY CHARLES WILLIAM SVEC PE 57814, ON APRIL 18, 2003

KBR

Engineered by KBR Technical Services, Inc

©2003 Texas Department of Transportation

IH 35
LOOP 20 TO UNIROYAL ROAD

SERVICE POLE DESCRIPTION

SHEET 1 OF 1

FED RD DIV NO	FEDERAL AID PROJECT NO		SHEET NO
6	NH-2002 (79)		759
STATE	STATE DIST		COUNTY
TEXAS	LAREDO		WEBB
CONT	SECT	JOB	HIGHWAY NO
0018	05	062, ETC	IH 35

REF FILE(S): j01op01.bdr, bdr LV ON = 57,58,60-62

HOUFILE023 \hcivil\cf0130\ 4/17/2003

b36qsp29.dgn-05

DISCLAIMER
The use of this standard is governed by the "Texas Engineering Practice Act". No warranty of any kind is made by TxDOT for any purpose whatsoever. TxDOT assumes no responsibility for the conversion of this standard to other formats or for incorrect results or damages resulting from its use.

I. GENERAL REQUIREMENTS FOR ALL ELECTRICAL WORK

The location of all conductors, conduits, junction boxes, ground boxes, and electrical services is diagrammatic only and may be shifted by the Engineer to accommodate local conditions.

Materials shall be new and unused. Materials and installation shall comply with the applicable provisions of the National Electrical Code (NEC), National Electrical Manufacturers Association (NEMA) standards, and shall be Underwriters Laboratories (UL) Listed unless otherwise shown on the plans or specifications or approved by the Engineer in writing. Faulty fabrication or poor workmanship in any material, equipment, or installation shall be justification for rejection. When reference is made to UL, it can be considered to mean a Nationally Recognized Independent Testing Lab (NRTL). Comparable standards of Canadian Standard Association, Electrical Testing Laboratories or Factory Mutual can be equal to the referenced UL standard. Where reference is made to NEMA listed devices, IEC listed devices shall not be considered to be an acceptable equal to a NEMA listed device. Acceptable devices may have both a NEMA and IEC listing.

With the exception of high strength bolts, miscellaneous nuts, bolts and hardware may be stainless steel when plans specify galvanized, provided that bolts are 1/2 inch or less in diameter. The Contractor shall provide the following electrical test instruments as required by the Engineer to confirm compliance with the contract and the NEC. Those test instruments are voltmeter, amp probe, megger (1000 volt DC) and torque wrenches. All meters shall have been properly calibrated within one year. Calibration certification shall be provided to the Engineer upon request. Calibration certification tag shall also be applied to the meter. The Contractor shall operate meters during inspection as requested by the Engineer. Grounding shall be as shown on the plans and in accordance with the NEC. Metallic conduit, light poles, luminaires on bridge structures, and all metal enclosures shall be bonded to the system-grounding conductor. The ground rod in each ground box or junction box at the bridge ends, and in each ground box installed for underpass lighting will also be bonded to the system grounding conductor. The grounding conductor shall be bare or, if insulated, shall be green. Ground rods, connectors, and bonding jumpers will not be paid for separately, but will be subsidiary to the various bid items.

SUBMITTALS:

The contractor shall submit for approval six (6) copies of catalog cut sheets for each of the following three (3) categories.
Category 1. Electrical services including photocell.
Category 2. Breakaway disconnects, heat shrink tubing, heat shrink filler tape, GelCaps and ground boxes which will include loading capacity certification.
Category 3. Highmast assembly kits, when applicable. See Item 614 "Highmast Illumination Assemblies". Submittals shall be legible and shall be marked to indicate which product on a cut sheet is to be supplied. Where manufacturers provide warranties and guarantees as a customary trade practice, the Contractor shall furnish to the State such warranties and guarantees.
Any deviation from plans or specifications, including deviations due to plan error should be prominently displayed on the submittal. Any changes not prominently noted in submittal and incorporated into the work without proper authorization will constitute grounds for rejection of that portion of the work.

II. CONDUIT

A. MATERIALS

1. Conduit and fittings shall be UL Listed for the intended use shown on plan sheets.
2. Conduit shall be the type shown by descriptive code or shown elsewhere on the plans. Substitution of the various types of conduits will not be permitted. All flexible conduit in rigid metallic conduit (RMC) systems shall be Liquidtight Flexible Metal (LFMC) conduit. All flexible conduit in PVC systems shall be Liquidtight Flexible Non-metallic conduit (LFNC).
3. All exposed conduits shall be RMC, unless otherwise specifically shown on the plans. All metal conduit shall be properly grounded.
4. Couplings, connectors, conduit bodies, grounding bushings, and offset nipples for RMC shall be electro-zinc plated steel or hot dipped galvanized malleable iron, threaded or threadless compression type, rain-tight and shall be UL listed for the intended use.
5. Expansion joints for metal conduit shall be provided with an internal or external bonding jumper and shall be UL listed.
6. Unless otherwise shown on the plans, junction box minimum sizes shall be in accordance with the following table which applies to the greatest number of conductors entering the box through one conduit with no more than four conduits per box. When a mixture of conductor sizes are present, the conductors shall be counted as if all are of the larger size. Situations not applicable to the table shall be sized in accordance with NEC 370-28.

AWG	3 CONDUCTORS	5 CONDUCTORS	7 CONDUCTORS
#1	10" x 10" x 4"	12" x 12" x 4"	16" x 16" x 4"
#2	8" x 8" x 4"	10" x 10" x 4"	12" x 12" x 4"
#4	8" x 8" x 4"	10" x 10" x 4"	10" x 10" x 4"
#6	8" x 8" x 4"	8" x 8" x 4"	10" x 10" x 4"
#8	8" x 8" x 4"	8" x 8" x 4"	8" x 8" x 4"

7. RMC system junction boxes equal to or smaller, in any dimension, than 12 x 12 x 6 (HxWxD), surface mounted and containing conductors #8 or larger, shall be hot dipped galvanized cast iron with minimum wall thickness of 3/16 inch, shall have external mounting lugs, and shall be UL listed Crouse-Hinds Type WAB, OZ/Gedney Type YS or approved equal. Unless otherwise shown elsewhere on the plans, RMC system junction boxes larger than the aforementioned boxes but equal to or smaller, in any dimension, than 18 x 18 x 6 (HxWxD) shall be 14-ga. stainless steel; RMC system junction boxes larger than 18 x 18 x 6 (HxWxD) shall be 12-ga. stainless steel. All metal junction boxes shall be equipped with a threaded hole or lug for grounding. Stainless steel boxes 12 x 12 x 6 and larger need not be UL Listed but shall meet the other requirements of the NEC and shall have ribs, stiffeners, or thicker metal and shall have external mounting feet. Junction boxes with an internal volume of more than 100 cu. in. may be supported by connection of two or more rigid metal conduits, where specifically shown on the plans or where approved by the Engineer.
8. Junction boxes containing only #10 or #12 AWG conductors shall be Crouse Hinds Type GRFX, Appleton Type JBOX, two-gang FD, or similar approved cast iron box. Boxes shall be sized according to NEC Table 370-16(a).
9. IMC and EMT conduit shall not be used unless specifically required by the plan layout sheets. Junction boxes in EMT conduit systems shall be made from galvanized sheeting and shall be UL listed and approved for outdoor use, unless otherwise noted on the plans. Sheet metal junction boxes shall be sized in accordance with the NEC. Junction boxes for IMC conduit systems shall meet the requirements of boxes used with RMC systems.
10. Junction boxes in PVC conduit systems shall be PVC, intended for outdoor use, unless otherwise noted on the plans.
11. Elbows in PVC conduit systems one inch and larger shall be rigid metal, with the exception of traffic signal systems which may have PVC elbows instead of rigid. If any part of the rigid metal elbow is buried less than 18 inches underground the elbow and rigid metal extension shall be grounded. Grounding shall be accomplished by means of a grounding bushing installed on the extension. Unless specifically shown on the plans, rigid metal elbows containing, or entering ground boxes containing only communications conductors, loop detectors, or other low voltage power limited circuits need not be grounded unless a ground wire is present in the conduit or ground box. The rigid metal elbows located in concrete foundations may be extended with PVC conduit and need not be grounded provided that the end of the elbow nearest the end of the conduit run exiting the foundation is at least 2 inches below the concrete. RMC elbows will not be eliminated. RMC elbows will not be paid for directly, but will be subsidiary to various bid items.
12. High-Density Polyethylene (HDPE) conduit shall meet the requirements of Item 622, Duct Cable, except that the HDPE conduit, when bid under Item 618, Conduit, shall not contain factory installed conductors. Fittings for HDPE conduit shall be UL listed as an electrical conduit connector or shall be thermally fused using an electrically heated wound wire resistance welding method. HDPE conduit may be substituted for bored schedule 40 or schedule 80 PVC conduit. When such substitution is made, bored HDPE shall be schedule 40 of the size PVC being replaced. The HDPE conduit shall transition to PVC (or RMC elbow when required) at the bore pit. Size and schedule shall be as shown on the plans. Substituted conduit may not be extended to ground boxes or foundations; RMC elbows shall be installed at ground boxes and foundations. RMC elbows will not be eliminated.
13. All conduit support hardware including straps, nuts, bolts, screws, retaining anchors and washers shall be hot dipped galvanized or stainless steel. Strut type conduit straps shall be stainless steel or hot dipped galvanized. Strut type straps need not be made of malleable type material. Stamped-cadmium plated straps will not be allowed. Straps having only one mounting hole shall not be allowed for use on conduits 2 inches and larger with the exception of electrical service poles where stainless steel standoff straps will be allowed. Two piece conduit straps designed to be used with a mounting shoe shall be installed only with the correctly sized shoe.

B. CONSTRUCTION METHODS

1. Conduit in structures shall have expansion fittings at structure expansion joints. All straight runs of RMC conduit exposed on structures such as bridges shall have expansion joints installed at maximum intervals of 150 feet. Expansion joints shall be installed so they allow for movement of the conduit. Installation of the joint in such a manner that will not allow for movement shall be repaired at no expense to the state. The method of determining the final setting length of the expansion joint shall be provided to the Engineer upon request.
2. Conduit supports shall be spaced at maximum intervals of 5 feet. Conduit spacers shall be used with metal conduit placed on surfaces of concrete structures (See conduit mounting options).
3. Conduit supports shall not be attached directly to prestressed concrete beams except as shown specifically in the plans and approved by the Engineer.
4. Unless otherwise shown on the plans, conduit placed beneath existing roadways, driveways, or sidewalks, or after the base or surfacing operation has begun, shall be accomplished by jacking or boring. The Contractor shall back fill and compact the bore pits to the bottom of the conduit prior to installing connecting conduit or duct cable to prevent bending of the connection.
5. Conduit trenched in the subgrade of new roadways shall be backfilled with excavated material, unless otherwise noted on the plans. Conduit trenched in the sub-base of new roadways shall be backfilled with cement-stabilized base.
6. Open ends of all conduit and raceways shall be fitted with temporary caps or plugs to prevent entry of dirt, debris and rodents during construction. The temporary cap may be constructed of duct tape, but in all cases shall be tightly fixed to the conduit and shall be durable. The contractor shall clean out the conduit and prove it clear in accordance with Standard Specifications Item 618.3 prior to installing any conductors.
7. Conduit entry into the top of enclosures such as safety switches, meter cans, service enclosures, auxiliary enclosures and junction boxes shall be made weatherproof using conduit sealing hubs, or threaded bosses.
8. A bonding jumper shall be installed from each grounding bushing to the nearest grounding rod, grounding lug, and/or equipment grounding conductor. All jumpers shall be the same size as equipment grounding conductor. Conduit used as casing under roadways for duct cable need not be grounded if duct extends full length through the casing. At electrical services, grounding electrode conductor shall be a solid Copper #6 AWG.
9. Metal junction boxes shall be bonded to the grounding conductor in accordance with the NEC.
10. Conduits entering ground boxes shall be placed so that the conduit ends shall be not less than 3 inches nor more than 6 inches from bottom of box (See ground box detail on sheet ED(3).
11. Conduit ends shall be sealed with heat shrink boots with waterproof sealant, urethane foam, or by other methods approved by the Engineer. Sealing shall be done after completion of any required pull tests. Duct tape shall not be used as a permanent conduit sealant. Silicone caulking shall not be used as a sealant.
12. All strut mounting material and hardware shall be hot-dip galvanized or shall be stainless steel. The cut ends of strut and non-galvanized rigid metal conduit threads shall be coated with a zinc rich paint (90% or more zinc content). Zinc rich paint may only be used to touch up galvanized material as allowed under item 445.6 galvanizing. The painting of non-galvanized material with a zinc rich paint shall not be considered as an approved alternative for galvanized materials.
13. All PVC conduit terminations shall be fitted with bushings or bell ends. All metal conduit terminations shall be fitted with a grounding type bushing.

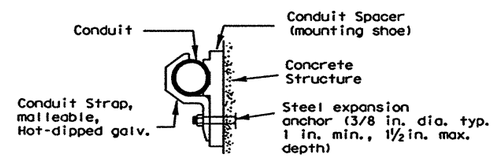

CONDUIT MOUNTING OPTIONS

(Attachment to concrete surfaces)
(See para. II.B.2)

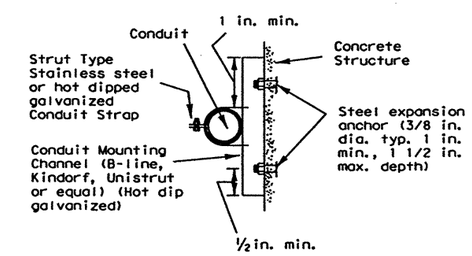

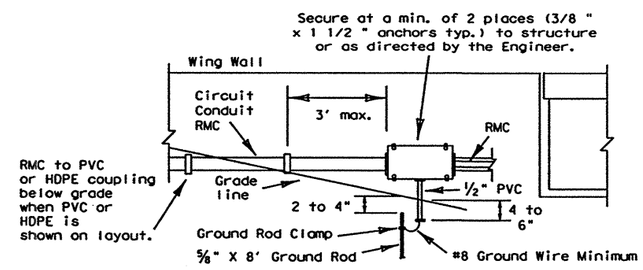

TYPICAL CONDUIT ENTRY TO BRIDGE STRUCTURE DETAIL

NOTES

1.) Ground rod clamp to be Blackburn GG 5/8H, Weaver W5/8 or equal.
2.) For conduit placed in structure, use flush-mounted box.
3.) Bond junction box and metal conduits to equipment grounding conductor and grounding electrode conductor using listed connector.
4.) Seal all conduits entering the junction box from underground.
5.) Install bell end or bushing on 1/2 " PVC conduit both ends.
6.) Ground rod to be driven within 8 inches of 1/2 inch PVC conduit end.

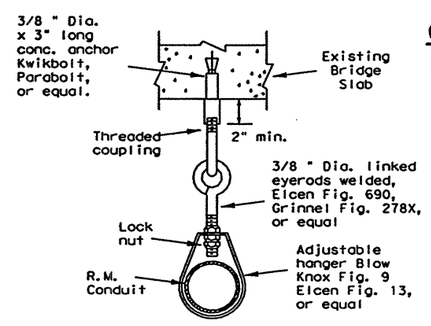

CONDUIT HANGER DETAIL

(Attachment to horizontal surfaces)
Hangers need not be UL listed for electrical use
ie: plumber pipe hangers are acceptable

STANDARD PLANS
TEXAS DEPARTMENT OF TRANSPORTATION
Traffic Operations Division

ELECTRICAL DETAILS-CONDUIT

ED(1)-03

©TxDOT January 1992	DN: KB	CK: JW	DW: DN	CK: GC	MSG NO.:
REVISIONS: 10-93, 4-98, 12-00, 3-03	STATE DISTRICT 22	FEDERAL REGION 6	FEDERAL AID PROJECT NH-2002 (79)		SHEET 760
COUNTY WEBB	CONTROL 0018	SECTION 05	JOB 062 ETC		HIGHWAY IH 35

DN: CK: DW: CK:
DATE: ACC: FILE:
LEVELS OF DETAIL
34mop59.dgn-01 HOUFILE023 \hcivil\cf0130\ 4/18/2003

DISCLAIMER
The use of this standard is governed by the "Texas Engineering Practice Act". No warranty of any kind is made by TxDOT for any purpose whatsoever. TxDOT assumes no responsibility for the conversion of this standard to other formats or for incorrect results or damages resulting from its use.

I. ELECTRICAL CONDUCTORS

A. MATERIALS

1. Insulated conductors shall be NEC Type XHHW. Insulated conductors shall be color coded in accordance with the NEC, articles 200, 250, and 310; i.e. Insulation of grounded conductors (neutrals) shall be white. Grounding conductors (ground wires) shall be bare or insulation shall be green. Insulation of ungrounded conductors (hots) shall be any color except green, white, or gray. Identification of conductors #6 American Wire Guage (AWG) and smaller shall be by continuous jacket color. Color coding of electrical conductors #4 AWG and larger shall be either by continuous color jacket or by colored tape. Colored tape marker shall consist of a half-lap of tape covering a 6-inch length of conductor.
2. Where two or more circuits are present in one conduit or enclosure, the conductors of each circuit shall be identified by a permanent non-metallic tag at each accessible location. The tag shall be fastened to the conductors by two plastic straps. Each tag shall indicate circuit number, letter, or other identification shown in the plans.
3. Grounding electrode conductor #6 AWG for bonding to ground rod at electrical service, shall be solid. Connection of conductor to ground rod shall be made using UL Listed connectors designed for such purposes.
4. Heat Shrink Tape filler shall be used to seal the ends of heat shrink tubing around two or more conductors that are insulated with heat shrink tubing. Tape material shall have a minimum dielectric strength of 225 volts per mil and shall be cross-linked butyl rubber. Tape shall be supplied in rolls and shall have a backing (release paper) to prevent the tape from sticking to itself.
5. Heat shrink tubing shall be heavy wall, UL listed for 600 volts or greater and shall have factory applied internal sealant.
6. GelCaps shall be UL listed for 600-volt applications. GelCap shall have see-through elastomer molded cover. Cover shall be filled with high dielectric insulating gel silicone sealant to provide waterseal. Cover shall be held in place by snap-lock, molded clamp made of UV stable polypropylene.
7. Splicing materials, insulating materials, breakaway disconnects, GelCaps and fuse holders will not be paid for directly but shall be subsidiary to various bid items.

B. CONSTRUCTION METHODS

1. After conductors have been installed in conduit, a pull test shall be made on conductors. When any length of conductor cannot be freely pulled, the Contractor shall make any needed alterations or repairs at no expense to the State.
2. The Contractor shall perform insulation resistance tests in accordance with Item 620, "Electrical Conductors." The Contractor shall coordinate with the Engineer to witness the tests.
3. A sufficient length of conductor for making up connections shall be left in ground boxes (2 feet minimum, 3 feet maximum, to point of splice, 3 feet minimum, 4 feet maximum, when conductor is pulled through with no splice), enclosures, weatherheads and pole bases (1 foot minimum, 1.5 feet maximum).
4. Splices shall be made only in junction boxes, ground boxes, pole bases, or electrical enclosures and shall be made with listed compression or screw type pressure connectors, terminal blocks, bolted lugs, or split bolt connectors. Splices shall be insulated with heavy wall heat shrink tubing or GelCaps and shall be made so as to provide a watertight splice. Heat shrink sleeve shall overlap conductor insulation a minimum of 2 inches on both sides of the splice. Where heat shrink tubing may not shrink sufficiently to provide a watertight seal around the individual conductors, prior to heating the tubing, the Contractor shall increase the diameter of the conductors insulation using heat shrink filler tape to provide a watertight seal between the individual conductors and the heat shrink tubing. Tape shall be visible after completion of all splices. Where filler tape is used but not visible, the Engineer shall approve each individual splice by conducting a physical inspection of each splice. When it appears the tubing has been burned, or overheated the tubing shall be considered to be defective and shall be replaced.
5. GelCaps when used in place of heat shrink method of splicing, shall be sized and installed according to manufacturer's specifications. (Raychem GelCap and GelCap SL or equal.)
6. Wire nuts may be used for #8 AWG or smaller conductors in above-ground junction boxes, but not in pole bases or ground boxes. Wire nuts shall be positioned upright to prevent the accumulation of water. Wire nuts used at these locations shall have factory applied waterproof sealant.
7. Conductors in illumination poles shall be supported by a J-hook in the top of the pole.
8. All conductors bid under Item 620 "Electrical Conductors" shall have breakaway electrical disconnects installed anytime conductors pass through a break-away support device.
9. For terminating the conductors, insulation-jacketing material shall be removed in such a manner as to not nick any of the individual strands of the conductor. When individual conductor strands are removed, the conductor shall be considered to be damaged.
10. When a conductor or cable has been damaged, or fails to pass an insulation resistance test, the conductor shall be replaced.
11. Duct tape, black electrical tape, or wire nuts shall not be used in the repair of a damaged conductor.
12. For terminations, no more than one wire may be installed under a single pressure connector, unless the device is listed for more than one wire.
13. Conductors connected to break-away in line fuse holders must be installed in accordance with the specific manufacturer's installation instructions. Where threaded connections are made, they shall be properly torqued. Where crimp type connections are made, crimps shall be made using properly sized crimping pliers. Proper conductor terminations are critical to the safe operation of break-away devices.
14. Waterproofing boots shall be properly trimmed to fit snugly around the conductor so as to provide a water proof connection. No more than one wire may enter a single opening in any one boot. Water proofing boots must provide the correct number of openings. Where only one wire is to be connected to a boot, the boot may not be a two wire type.

SPLICE OPTION 3
SPLIT BOLT

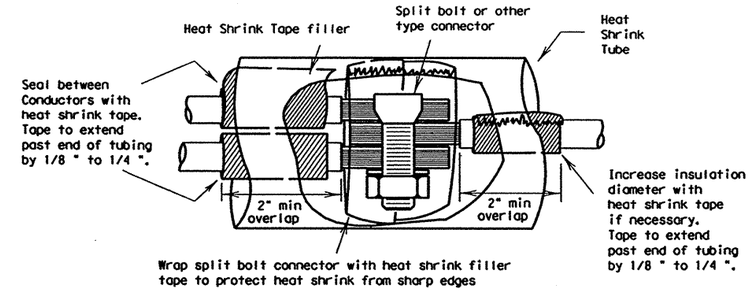

SPLICE OPTION 4
GELCAP

GelCap shall be sized and installed according to manufacturers specifications

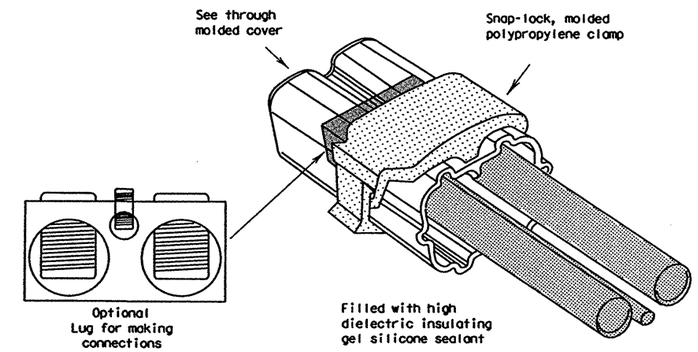

15. All conduits that contain circuit wiring of 50 volts or more shall contain an equipment grounding conductor (EGC). Conduit for traffic signals shall have an EGC, with a minimum size of #8 AWG stranded. Unless otherwise shown on the plans, the EGC for all other conduits shall be the same AWG size as the largest current carrying conductor contained in that conduit. The EGC shall be paid for item 620-Electrical Conductors.

C. TEMPORARY WIRING

1. Temporary conductors and electrical equipment to provide power for utilization equipment, shall be installed in accordance with the NEC article 305. All temporary wiring materials and methods shall comply with the standard sheets. All power outlets for portable electrical equipment, power tools, ice machines, ice storage bins and refrigerators located outdoors at grade, supplied from a utility power source, shall be provided with a ground fault circuit interrupter.
2. Residual current protective devices (GFCI) may be any one of the following: molded cord and plug set, receptacle, or circuit breaker type.
3. Where wire nuts are approved for temporary wiring, they shall be of the self-sealing type.
4. All conductor splices must be contained within a listed enclosure, ground box or the splices will be more than ten feet above grade vertically and more than five feet horizontally from any metal structure. Where temporary conductors are installed in any area that is likely to be subjected to vehicle traffic, or mobile construction equipment, the vertical clearance to ground shall be at least 18 feet when measured at the lowest point. Where power conductors are to be supported by a span wire, the span wire shall be properly grounded.
5. Existing conduit containing service conductors uncovered during the construction process shall be repaired in a timely manner in accordance with the NEC. Existing non-metallic conduit exposed during construction shall not be left exposed above grade, or with less than eighteen inches of cover, without protective methods approved by the Engineer.

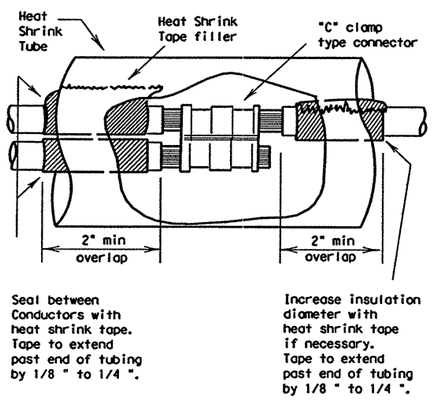

SPLICE OPTION 1
C-CLAMP

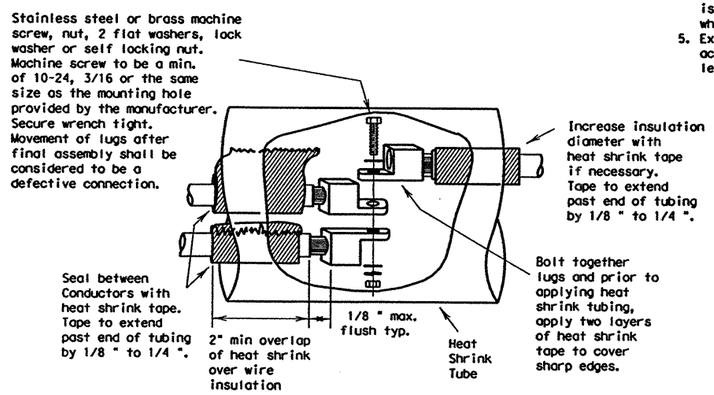

SPLICE OPTION 2
BOLTED WIRE LUGS

STANDARD PLANS
TEXAS DEPARTMENT OF TRANSPORTATION
Traffic Operations Division

ELECTRICAL DETAILS-CONDUCTORS

ED(2)-03

©TxDOT January 1992	DN-KB	CK-JW	DW-DN	CK-GC	MSG NO.	
REVISIONS 10-93 4-98 12-00 3-03	STATE DISTRICT 22	FEDERAL REGION 6	FEDERAL AID PROJECT NH-2002 (79)			SHEET 761
	COUNTY WEBB		CONTROL 0018	SECTION 05	JOB 062 ETC	HIGHWAY IH 35

LEVELS 0 1 2 3 4 5 6 7 8 9 10 11 12 13 14 15 16 17 18 19 20 21 22 23 24 25 26 27 28 29 30 31 32 33 34 35 36 37 38 39 40 41 42 43 44 45 46 47 48 49 50 51 52 53 54 55 56 57 58 59 60 61 62 63
DATE: ACC: FILE:
DN: CK: DW: CK:
34mop60.dgn-01 HOUFILE023 \hcivil\cf0130\ 4/18/2003

DISCLAIMER
The use of this standard is governed by the "Texas Engineering Practice Act". No warranty of any kind is made by TxDOT for any purpose whatsoever. TxDOT assumes no responsibility for the conversion of this standard to other formats or for incorrect results or damages resulting from its use.

II. GROUND RODS

A. MATERIALS

1. All ground rods installed at electrical services, including supplemental lightning protection ground rods specified by the plans in other locations such as pole bases, shall be copper clad and UL listed. Rods shall be a minimum diameter of 5/8 inch. The length shall be a minimum of 8 feet. Larger diameter or longer length rods may be called for in some specific locations, see the individual plans sheets.
2. Ground rod clamps shall be listed to be in direct contact with the soil. Where concrete encasement is required, the clamp shall be listed for concrete encasement.

B. CONSTRUCTION METHODS

1. Ground rods installed in locations such as pole bases, to provide supplemental lightning protection need not be totally in contact with the soil. Where called for in the plans, rods may be encased in soil or concrete or any combination of soil and concrete. When concrete encased, the connection of the conductor to the rod shall be readily accessible for inspection or repairs. When driven into the soil the upper end shall be between 2 to 4 inches below finished grade. Ground rods shall not be placed in the same drilled hole as a timber pole.
2. Ground rods shall be installed such that the end imprinted with the rod's part number is installed as being the upper end.
3. Non-conductive coatings such as concrete splatter shall be removed from the rod at the clamp location.
4. Routing of lightning protection ground rod wires shall be run as short and straight as possible. Where bends are required they shall have a minimum radius of four inches.
5. Unless specifically called for by the plans, conduits used for ground rod wires shall be non-metallic. Where metal conduits are specified, a grounding bushing and properly sized bonding jumper shall be provided and properly installed on each end.
6. Where rocky soil or a solid rock bottom is encountered when driving a ground rod and the horizontal trench placement method is the only viable solution, written authorization from the Engineer must be obtained.

III. GROUND BOX

A. MATERIALS

1. Ground boxes 16x30x24 inches (WxLxD) or smaller shall be polymer concrete of the type required by the descriptive code shown elsewhere. Larger ground boxes shall be as shown elsewhere in the plans.
2. All ground boxes and covers shall be permanently marked either by impress or by permanent ink, with manufacturer's model number and manufacturer's name or logo.
3. Covers shall be bolted down, and bolt holes in the box shall be arranged to drain dirt.
4. Ground box Types A, B, C, D & E shall meet the following requirements:
   a. Ground boxes and covers be manufactured from polymer concrete reinforced with continuous strands of woven or stitched borosilicate fiberglass cloth. The polymer concrete shall be made from catalyzed polyester resin, sand and aggregate, and shall have a minimum compressive strength of 11,000 psi. Polymer concrete containing chopped fiberglass or fiberglass reinforced plastic is not acceptable.
   b. Minimum inside dimensions shall be as follows (width x length x depth):
      Type A shall be 11.5 inches x 21 inches x 10 inches, (122311)
      Type B shall be 11.5 inches x 21 inches x 20 inches, (122322)
      Type C shall be 15.25 inches x 28.25 inches x 10 inches, (162911)
      Type D shall be 15.25 inches x 28.25 inches x 20 inches, (162922)
      Type E shall be 11.5 inches x 21 inches x 16 inches, (122317)
   c. Bottom edge of box or extension shall be footed with a minimum 1 1/4 inch flange.
   d. Ground boxes shall withstand 600 lbs. per sq. ft. applied over the entire sidewall with less than 1/4 inch deflection per foot length of box. Ground boxes and covers shall withstand a test loading of 20,000 lbs. over a 10 inch by 10 inch area centered on the cover with less than 1/2 inch deflection. Ground boxes and covers shall meet Western Underground Standards 3.6. Manufacturer shall supply certification by an independent laboratory or sealed by a Texas-Licensed Professional Engineer.
   e. Covers shall be 2 inch (nominal) thick polymer concrete. All hardware shall be stainless steel. Cover shall be secured with two 1/2 inch stainless steel bolts. Bolts shall be self-retaining and shall withstand a minimum of 70 ft-lbs. torque and shall have a minimum 750 lbs. straight pull out strength. Nuts shall be floating and shall provide a minimum of 1/2 inch movement from the center of the nut. Covers shall be skid resistant, minimum 0.5 coefficient of friction. Covers shall be interchangeable between manufacturers and shall conform to the dimensions shown herein. Unless otherwise approved by the Engineer, cover shall be legibly imprinted with the following words in minimum 1 inch letters:
      Ground Boxes containing wiring for traffic signals shall be labeled, Danger High Voltage Traffic Signal.
      Ground boxes containing wiring for illumination systems shall be labeled, Danger High Voltage Illumination.
      Ground boxes containing wiring for traffic management systems shall be labeled, Danger High Voltage Traffic Management.
      Ground boxes containing wiring for sign illumination systems shall be labeled, Danger High Voltage Sign Illumination.
      Ground boxes containing wiring for traffic signals that also contain illumination, powered by the signal electrical service, shall be labeled, Danger High Voltage Traffic Signal.

B. CONSTRUCTION METHODS

1. Ground boxes shall be set on a 9 inch (minimum) bed of coarse No. 1 aggregate as defined by Item 421. Gravel shall be in place prior to setting box and conduits shall be capped. Any gravel or dirt in conduit shall be removed.
2. When required by Item descriptive code, construction of an apron encasing a ground box including concrete and reinforcing steel shall not be paid for directly but shall be subsidiary to the ground box. Reinforcing steel may be field bent. Concrete for aprons shall be considered miscellaneous concrete for testing purposes. Aprons shall be cast in place.
3. Conduit holes may be cut in the walls of type B & D boxes at least 18 inches beneath the cover.
4. If, within the limits of this project, the Contractor must utilize an existing ground box equipped with a metal cover, the Contractor shall bond the cover to the grounding conductor with a 3 foot long flexible stranded jumper the same size as the grounding conductor. Connection of bonding jumper to metal ground cover shall not be paid for directly but shall be subsidiary to various bid items. The box(es) must be clearly shown on the plans with plan notes fully describing the work required.
5. If there are other ground boxes with metal Covers within the project limits but not involved in the contract, the Engineer may direct the Contractor to ground the covers, designating and identifying the specific boxes in writing. This work will be paid for separately.
6. Termination to metal ground box covers shall be made using a tank ground type lug.

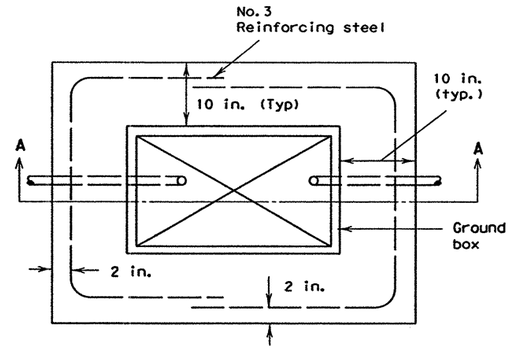

PLAN VIEW

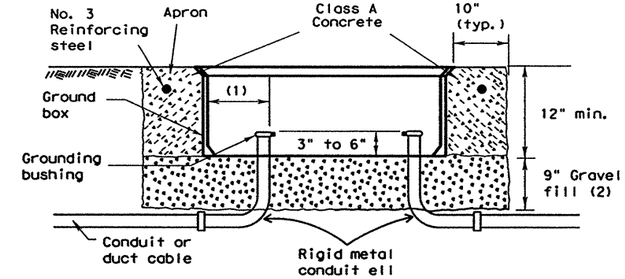

SECTION A - A

APRON FOR GROUND BOXES

(Where required)

(1) Final position of end of conduit shall not exceed one-half the distance to the side of box opposite the conduit entry.
(2) Place gravel "under" the box, not "in" the box. Gravel should not encroach on the interior volume of the box.
(3) Install bushing on the upper end of all ells.
(4) Where a ground rod is present in the ground box, connect it to any and all equipment grounding conductors using a listed connector.
(5) Maintain sufficient space between all conduits so as to allow for proper installation of bushings.
(6) All conduits shall be installed in a neat and workmanlike manner.
(7) All conduits installed in the ground box shall be sealed after completion of conductor installation and any required pull tests. Silicone shall not be used as sealant.

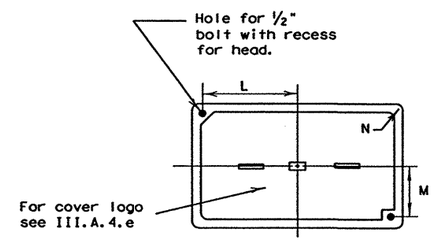

PLAN VIEW

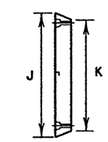

END

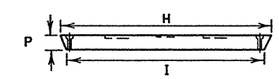

SIDE

GROUND BOX COVER

GROUND BOX COVER DIMENSIONS								
BOX	DIMENSIONS (INCHES)							
SIZE	H	I	J	K	L	M	N	P
A, B & E	23 ¼	23	13 ¾	13 ½	9 ⅞	5 ⅛	1 ⅜	2
C & D	30 ½	30 ¼	17 ½	17 ¼	13 ¼	6 ¾	1 ⅜	2

STANDARD PLANS
TEXAS DEPARTMENT OF TRANSPORTATION
Traffic Operations Division

ELECTRICAL DETAILS-
GROUND BOXES

ED(3)-03

©TxDOT January 1992	DN: KB	CK: JW	DW: DN	CK: GC	MCG NO.:

REVISIONS	STATE DISTRICT	FEDERAL REGION	FEDERAL AID PROJECT	SHEET
10-93 4-98 12-00 3-03	22	6	NH-2002 (79)	762

COUNTY	CONTROL	SECTION	JOB	HIGHWAY
WEBB	0018	05	062, ETC	IH 35

LEVELS 1 2 3 4 5 6 7 8 9 10 11 12 13 14 15 16 17 18 19 20 21 22 23 24 25 26 27 28 29 30 31 32 33 34 35 36 37 38 39 40 41 42 43 44 45 46 47 48 49 50 51 52 53 54 55 56 57 58 59 60 61 62 63
ED 11 21 31 41 51 61
DATE:
ACC:
FILE:
DN:
CK:
DW:
CK:
HOUFILE023 \hcivil\cf0130\ b34mop61.dgn-01 4/18/2003

DISCLAIMER
The use of this standard is governed by the "Texas Engineering Practice Act". No warranty of any kind is made by TxDOT for any purpose whatsoever. TxDOT assumes no responsibility for the conversion of this standard to other formats or for incorrect results or damages resulting from its use.

ELECTRICAL SERVICES NOTES

All work, materials, services, and incidentals, whether or not specifically shown on the plans, which may be necessary for a complete and proper electrical service installation as specified in the plans to obtain electrical power shall be paid for, performed, furnished and installed by the Contractor. The Contractor shall contact the Utility for metering and shall comply with all Utility requirements.

Primary line extensions, connection charges, meter charges, and other charges by the Utility company to provide power to the location shown, when required, shall be paid for under force account work. The costs associated with these charges shall be approved by the Engineer prior to engaging the Utility company to do the work. The Contractor shall consult with the appropriate Utility to determine costs and requirements, and shall coordinate the Utility's work as approved by the Engineer. The Contractor shall be reimbursed only the amount billed by the Utility. No additional amount for supervision of the Utility's work will be paid.

Materials shall be new and unused, materials and installation shall comply with the applicable provisions of the National Electrical Code (NEC) and National Electrical Manufacturers Association (NEMA) standards and shall be Underwriters Laboratories (UL) Listed. Electrical Service conduits, conductors, disconnects, contactors, circuit breaker panel sizes, and branch circuit breakers, shall be as shown in the Electrical Service Data elsewhere in the plans. Faulty fabrication or poor workmanship in any material, equipment, or installation shall be justification for rejection.

The Contractor shall submit for approval no less than six (6) copies of catalog cut sheets on electrical service materials. Submittals shall be legible and shall be marked to indicate which product on a cut-sheet is to be supplied. Where manufacturers provide warranties and guarantees as a customary trade practice, Contractor shall furnish to the State such warranties or guarantees.

The Contractor shall provide locks keyed with Master #2195 for all lockable electrical enclosures. Keys and locks become property of the State. Unless otherwise approved by the Engineer, enclosures shall not be energized until locks are provided and all bolts are installed.

Circuit directories, where provided, shall be filled out. All breakers and components in shop built panels and enclosures shall be labeled with duo-colored plastic labels. Letters shall be a minimum 3/8 " in height.

Enclosures with external disconnects that de-energize all equipment inside the enclosure, need not have dead front trim, except that incoming line terminations shall be protected from incidental contact.

When galvanized is specified for nuts, screws, bolts or miscellaneous hardware, stainless steel may be used. All wiring and components shall be rated for 75 degrees C. Minimum size for service entrance conductors shall be #6 XHHW.

I. Safety Switch. A safety switch, placed ahead of the meter, shall only be used when specified by the Utility and when shown on the Electrical Service Data. The switch shall be UL Listed, heavy duty type, 600 volt, unfused, with a UL type 3R enclosure and equipped with a solid neutral (s/n) assembly. The switch shall be padlockable in the "on" position.

II. Service Type. Electrical service types A, C, D, and T shall be as schematically detailed on ED(4) or ED(5). Other service types shall be as detailed elsewhere on the plans.

III. Branch Circuit Breakers. Circuit breakers shall be thermal magnetic and have a minimum interrupting capacity of 10,000 amps and a voltage rating compatible with their use. Circuit breakers shall be sized as shown in the electrical service data. Circuit breakers in panelboards and load centers shall be full size and designed exclusively for the panelboard or load center in use. Tandem and half-width breakers shall not be used. All circuit breakers shall be permanently and clearly marked identifying the circuit or device supplied. Circuit breakers shall be UL Listed to UL489.

IV. Circuit Breaker Panelboard. Panelboards shall be UL Listed. Panelboards shall have copper busses, a minimum of 6 one-pole spaces or as required in the electrical service data, and when required will be rated for service equipment. Enclosure shall meet or exceed UL type 3R classification. Panelboards shall have a threaded hub conduit entry for conduit entering the top of the enclosure. Circuit breakers shall be bolt-in type only.

V. Circuit Breaker Load Center. Load centers shall be UL Listed.
Load centers for type T services may have copper or aluminum busses, all other load centers will be copper bus only. Load center will have a minimum of 4 one-pole spaces, and shall be rated for service equipment. Enclosure shall meet UL type 3R classification. Load centers shall have a threaded hub conduit entry for conduit entering the top of the enclosure. Circuit breakers shall be plug-in type only. Load centers for type T services shall accomodate a maximum of 6 one-pole breakers.

VI. Separate or Auxiliary Enclosure. Separate enclosures for HOA, photocell and lighting contactors for types D & T Services shall be a UL Listed assembly with outer door. Interior shall have dead front trim. HOA switch operator shall extend through the dead front trim. Photocell shall be mounted inside the enclosure as described in paragraph XIII when required by descriptive code. Separate enclosures shall meet the construction requirements of paragraph VIII. E, except that separate enclosure shall not have external operating handle, need not have a data pocket and door may latch at only one point. All equipment may be located in one enclosure instead of two, when approved by the Engineer.

VII. Where a Type D or T service is provided, laminated "as built" drawings are required as shown on ED(5) VIII E; shall be delivered before completion of the work, to the Engineer in lieu of placement within these smaller enclosures. Conduit may not enter the back wall of a service enclosure penetrating the equipment mounting panel. Provide grounding bushings on all metal conduits, terminate bonding jumper to grounding bus. Grounding bushing is not required when the end of the metal conduit is fitted with a conduit sealing hub or threaded boss such as a meter base.

EXPLANATION OF ELECTRICAL SERVICE DESCRIPTIVE CODE

ELEC SERV TY X (XXX/XXX) XXX (XX) XX (X) XX (X)

Example: ELEC SERV TY A(240/480)100(NS)SS(E)GC(O)

- Schematic Type
- Service Voltage (V / V)
- Disconnect Amp Rating (000 indicates main lug only)
- SS= Safety switch ahead of meter
  NS= No switch ahead of meter and/or no meter required
- Enclosure Type
  GS= Galvanized steel (see ED(5)VIII,D)
  SS= Stainless steel
  AL= Aluminum
- Photocell Mounting Location
  T= Top of pole
  E= Inside service/separate enclosure
  L= Luminaire mounted
  N= None
- Service Support Type
  GC= Granite concrete
  OC= Other concrete
  TP= Timber pole
  SP= Steel pole
  SF= Steel frame
  OT= Pole by others or paid for separately
  EX= Existing pole
  TS= Switch gear to be placed on traffic signal pole
  RT= Rectangular structural tubing
  PS= Pedestal Service (see ED(5)VIII,G)
- O= Overhead service
  U= Underground service

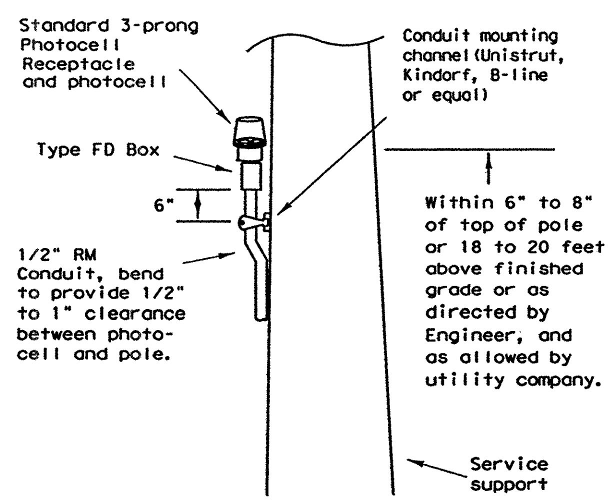

TOP MOUNTED PHOTOCELL

Conduit support spacing 3 feet from enclosure; 5 feet max.

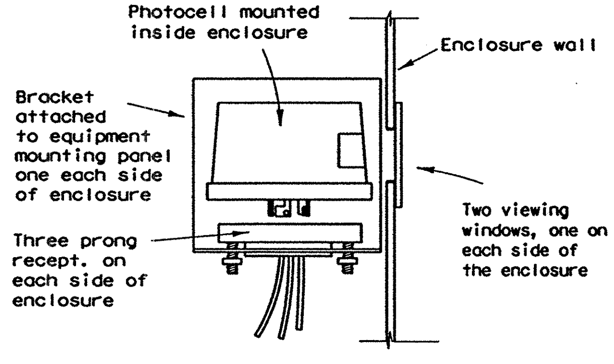

ENCLOSURE MOUNTED PHOTOCELL

For photocell specifications see ED(5),XIII.

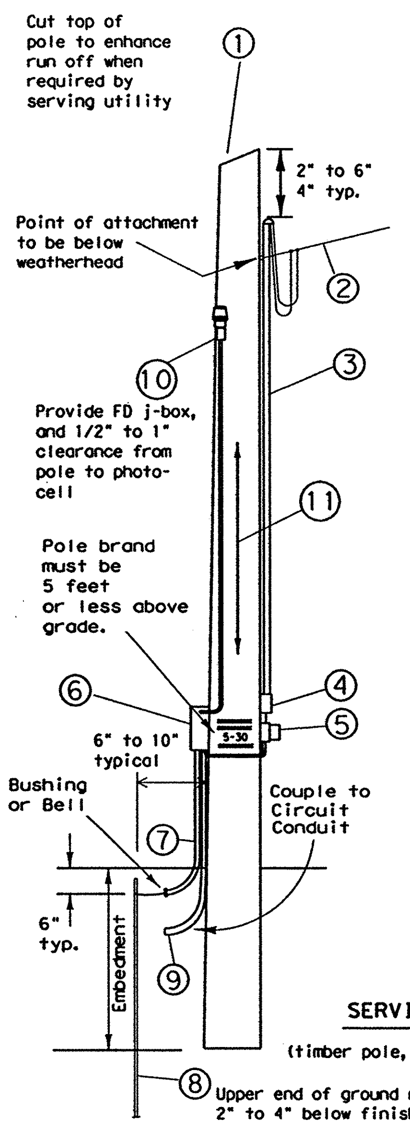

1 - Class 5 pole, height as required
2 - Service drop from utility company (attached below weatherhead)
3 - Service conduit and service entrance conductors (RMC) (See Electrical Service Data)
4 - Safety switch (when required)
5 - Meter (when required)
6 - Service enclosure
7 - No. 6 bare grounding electrode conductor in 1/2 " PVC to ground rod - extend 1/2 " PVC 6" underground.
8 - 5/8 " x 8' Copper clad ground rod - drive ground rod completely underground unless otherwise approved by the Engineer.
9 - RM conduit - same size as branch circuit conduit.
10 - Photocell and conduit - if top mounted. (See Electrical Service Data)
11 - When required by the serving utility provide bare #6 awg copper conductor. Run wire from pole top to butt wrap or copper butt plate. Protect conductor to a height of 8 ft above finish grade.

LIQUIDTIGHT FLEXIBLE METAL CONDUIT (LFMC)

(If applicable)

- Liquidtight flexible metal conduit, may be used when meter and service enclosure are mounted 90 to 180 degrees to each other. Size shall be same as service entrance conduit.
- LFMC shall not exceed 3 ft. and shall be securely supported within one ft. of each end. No strap required for LFMC shorter then 12"
- Each end of LFMC must have a grounding bushing or be terminated with a grounding fitting.
- A neutral conductor must be installed within the LFMC.
- Bend in liquidtight flexible metal conduit shall not exceed 180 degrees.
- A pull test is required on all installed conductors, at least six inches of free conductor movement shall be demonstrated to the satisfaction of the Engineer.

SERVICE SUPPORT TYPE TP (O)

(timber pole, overhead service, typical arrangement)

TIMBER POLE NOTES

1. Conduit and electrical conductors attached to the electrical service pole and underground within 12 inches of service pole shall not be paid for directly but shall be subsidiary to the service pole.
2. Pole top mounted photocell, install on north side of pole or in service enclosure as required. See Electrical Service Data.
3. Attach meter and service equipment with stainless steel or galvanized channel (Unistrut, Kindorf, or equal). Gain pole as required to provide flat surfaces for each strut. Paint ends of galvanized channel with zinc rich paint. Gain depth 5/8" max. Gain height 1 7/8" max. Strut to be 1" max. deep, and 1 5/8" wide max. Secure each strut section to timber pole with two galvanized or SS lag bolts, 1/4" diameter min. by 1 1/2" length min. Place flat cut galvanized or SS washer on each lag bolt. Gain pole in a neat and workmanlike manner.
4. Embedment depth shall be as required in Item 627 Treated Timber Poles.
5. Poles trimmed for excess length shall be trimmed from the top end only.

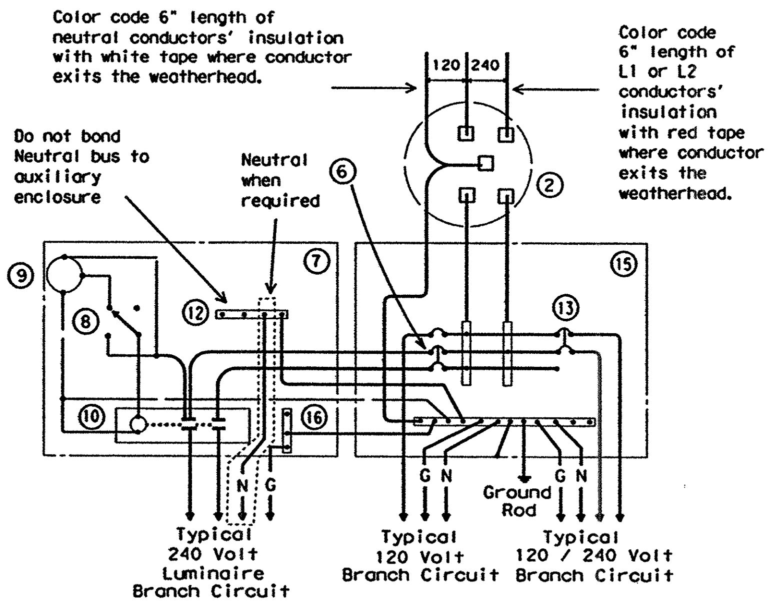

SCHEMATIC TYPE T

120/240 VOLTS - THREE WIRE

Install photocell and lighting contactor when shown on Electrical Service Data.

SCHEMATIC LEGEND

1 - omitted
2 - Meter (when required)
3 - Service Assembly Enclosure
4 - Main Disconnect Breaker (Not Used)
5 - Omit
6 - Circuit Breaker, 15 Amp typical for control circuit wiring
7 - Auxiliary Enclosure
8 - Control Station ("H-O-A" Switch)
9 - Photo Electric Control (enclosure-mounted shown)
10 - Lighting Contactor
11 - Power Distribution Terminal Blocks (Not Used)
12 - Neutral Bus required when 120 v. lights are controlled by lighting contactor
13 - Branch Circuit Breaker (See Electrical Service Data)
14 - Circuit Breaker Panelboard (Not Used)
15 - Load Center
16 - Ground Bus

———	Power Wiring
— —	Control Wiring
—N—	Neutral Conductor (when required-to serve 120 v. loads only)
—G—	Equipment grounding conductor-always required

STANDARD PLANS
TEXAS DEPARTMENT OF TRANSPORTATION
Traffic Operations Division

ELECTRICAL DETAILS- SERVICE SCHEMATICS AND SUPPORT-TYPE TP (OVERHEAD)

ED(4)-03

©TxDOT April 1998

DN: KB	CK: JW	DW: DN	CK: GC	NEG NO.:

REVISIONS	STATE DISTRICT	FEDERAL REGION	FEDERAL AID PROJECT	SHEET
12-00 3-03	22	6	NH-2002 (79)	763

COUNTY	CONTROL	SECTION	JOB	HIGHWAY
WEBB	0018	05	062, ETC	IH 35

DN: CK: DW: CK: DATE: ACC: FILE:

LEVELS D

b34mop62.dgn-01 HOUFILE023 \ncivil\cf0130\ 4/18/2003

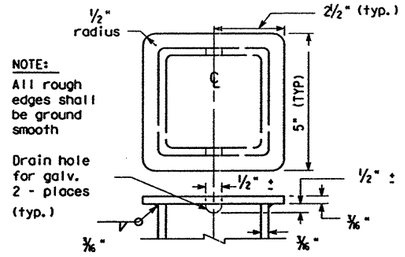

NOTE:
All rough edges shall be ground smooth

TOP OF POLE
TYPE SF & SP

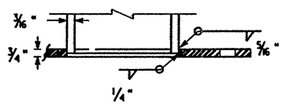

BOTTOM OF POLE
TYPE SF & SP

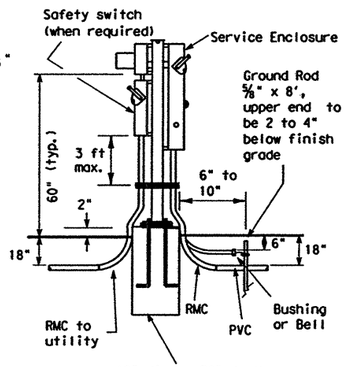

SERVICE SUPPORT
TYPE SP (U)
UNDERGROUND SERVICE
WITH SAFETY SWITCH

Color code 6" of grounded neutral conductors insulation with white tape where conductor exits the weatherhead. Color code 6" of L1 or L-2 Hot-ungrounded conductors insulation with red tape where conductor exits the weatherhead. Conductor free length, 12" min., 18" max.

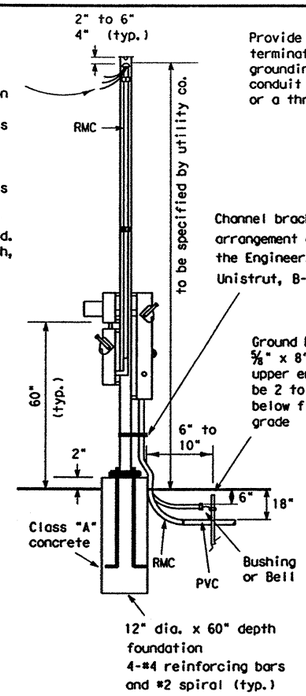

Provide grounding bushings on all metal conduits, terminate bonding jumpers (min. #6 AWG. Copper) to grounding bus. Grounding bushing not required when conduit end is fitted with a conduit sealing hub or a threaded type of boss such as a meter hub.

Channel bracket or other arrangement approved by the Engineer. (Kindorf, Unistrut, B-line or equal.)

Ground Rod 5/8" x 8', upper end to be 2 to 4" below finish grade

SERVICE SUPPORT
TYPE SP (O)
OVERHEAD SERVICE
WITH SAFETY SWITCH

Stand off type conduit support hardware shown. Provide when required by the utility.

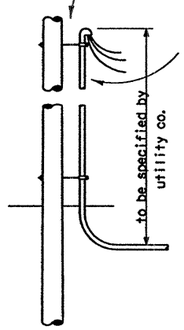

UNDERGROUND RISER
AT UTILITY POLE
(for underground service)

NOTES:

1. Support Type SP and SF: Fabricated from 4" x 4" x 3/16 " square structural tubing, ASTM A500 Grade A or G or equal. Base plate shall be 3/4 " plate, ASTM A36 or equal. All equipment and conduit shall be mounted on galvanized channel strut, 1 1/2 " x 1 5/8 " x 12 guage galvanized steel channel (Unistrut, Kindorf, B-line or equal) clamped with channel hardware, bolted or welded to vertical member as approved by the Engineer.
2. Paint field cut ends of all channels with zinc-rich paint.
3. All Steel Poles (SP and SF) shall be hot-dip galvanized after fabrication. Poles for overhead service shall be fitted with eyebolt or similar fitting, as approved by the utility company, for attachment of sevice drop to the pole.
4. All conduit and conductors attached to the electrical service and within 12 inches of the electrical service will not be paid for directly, but shall be subsidiary to the electrical service. All conduit and conductors from the utility company pole to the point 12 inches from the electrical service, including conduit and conductors required for the utility pole riser when furnished by the Contractor, will be paid for separately.
5. All mounting hardware and installation details of services shall be in accordance with utility company specifications.
6. Anchor bolts for underground service supports shall be 3/4" x 18" x 4" (dia. x length x hook length). Anchor bolts for overhead services shall be 3/4" x 56" x 4". Anchor bolts shall be provided with leveling nuts.
7. Conduit for grounding electrode conductor (ground rod wire) shall be 1/2" PVC. All other conduit on electrical services shall be rigid metal conduit. Service entrance conduit size shall be as shown elsewhere. Conduit for branch circuit entry to enclosure shall be the same size as that shown on the layout sheets for branch circuit conduit. Rigid metal conduit shall extend to the rigid metal elbow and then be coupled to the type conduit shown on the layout for that particular branch circuit. RMC shall have grounding bushings in enclosures.
8. If pole is painted, each separate painted piece shall have a bonding jumper attached to a tapped hole.
9. Sheet metal screws are not allowed for bonding. Provide 1/4-20 machine screws. Remove all non-conductive material at contact points. Terminate bonding jumper using listed device. Bonding jumper min. #6 AWG Copper. Make up all threaded bonding connections wrench tight.
10. Conduits entering enclosure from underground shall be sealed at both ends. Silicone sealant will not be allowed.
11. Ground rod clamp to be Blackburn GG 5/8H, Weaver w5/8 or equal.
12. Service entrance conductors shall exit separately bushed non-metallic openings in weatherhead.
13. Free conductor at weatherhead to be 12 in. min., 18 in. max., or as required by utility. Color code grounded-neutral conductor with white tape covering 6 in. of conductor. Color code L1 or L2 Hot un-grounded conductor with red tape covering 6 in. of conductor. Service drop and service entrance conductors must not contact metal pole in such a manner as to result in abrasion of insulated conductors.
14. Conduit support spacing to be max. 3 ft. from ends, and max. 5 ft. in between.
15. Shop drawings are not required for service support structure unless specifically stated elsewhere or as directed by the Engineer.
16. Service enclosure to be labeled as specified on ED(5) VIII C.
17. Liquidtight flexible metal conduit (LFMC) may be used between the meter and service enclosure when they are mounted 90 to 180 degrees to each other. LFMC shall be the same size as service entrance conduit. LFMC shall not exceed 3 ft. and shall be securely supported within one foot of each end. LFMC shorter then 12" need not be strapped. Each end of LFMC must have a grounding bushing or be terminated with a grounding fitting. A neutral conductor must be installed within the LFMC. Bend in LFMC shall not exceed 180 degrees.
A pull test is required on all installed conductors, at least six inches of free conductor movement shall be demonstrated to the satisfaction of the Engineer.

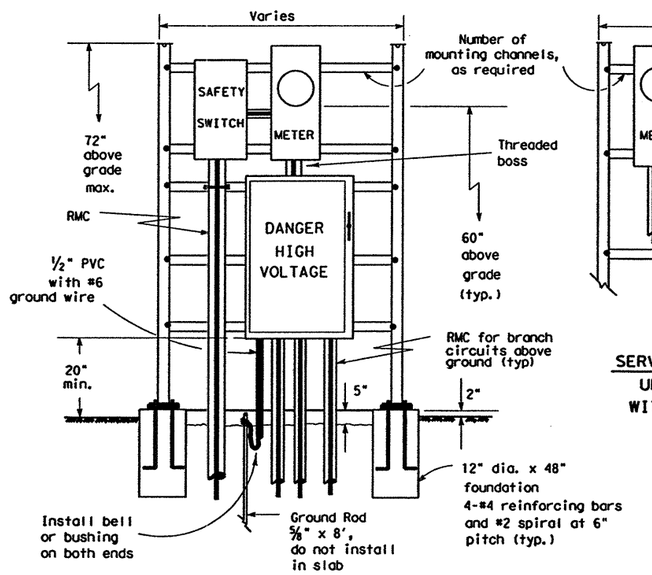

SERVICE SUPPORT TYPE SF (U)
UNDERGROUND SERVICE
WITH SAFETY SWITCH
(Typical Arrangement)

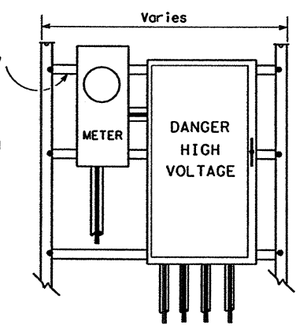

SERVICE SUPPORT TYPE SF (U)
UNDERGROUND SERVICE
WITHOUT SAFETY SWITCH

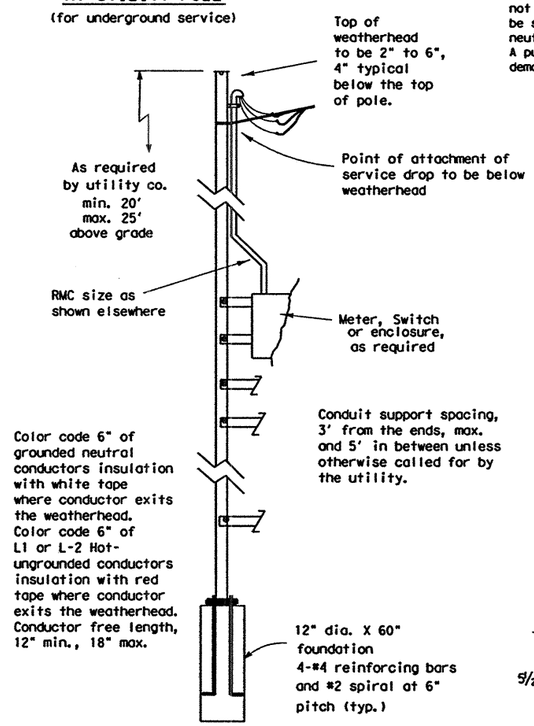

SERVICE SUPPORT TYPE SF (O)
OVERHEAD SERVICE

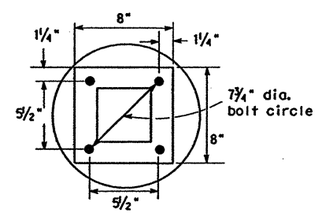

BASE PLATE DETAIL
TYPE SF & SP

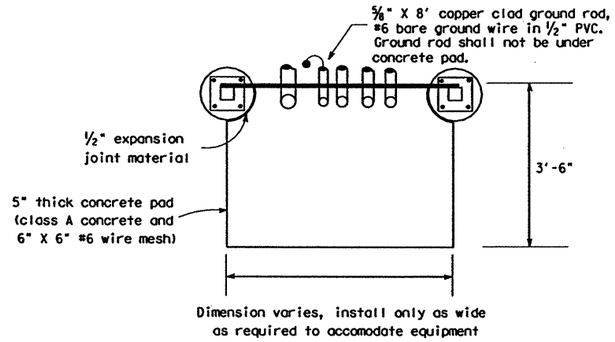

SERVICE SUPPORT TY SF (O) & SF (U)
TOP VIEW

STANDARD PLANS
TEXAS DEPARTMENT OF TRANSPORTATION
Traffic Operations Division

ELECTRICAL DETAILS-SERVICE SUPPORT TYPES SF & SP

ED(6)-03

©TxDOT January 1992	DN-KB	CK-JW	DW-DN	CK-GC	NEG NO.:
REVISIONS 10-93 4-98 12-00 3-03	STATE DISTRICT 22	FEDERAL REGION 6	FEDERAL AID PROJECT NH-2002 (79)		SHEET 764
	COUNTY WEBB		CONTROL 0018	SECTION 05 / JOB 062, ETC	HIGHWAY IH 35

DISCLAIMER
The use of this standard is governed by the "Texas Engineering Practice Act". No warranty of any kind is made by TxDOT for any purpose whatsoever. TxDOT assumes no responsibility for the conversion of this standard to other formats or for incorrect results or damages resulting from its use.

DN:LR CK:CW DW:DN CK:MT
DATE:
ACC: d58hplc/usr/d580504
FILE:
LEVELS D1

d34mp150.dgn-01 HOUFILE023 \hcivil\cf0130\ 4/18/2003

DISCLAIMER
The use of this standard is governed by the "Texas Engineering Practice Act". No warranty of any kind is made by TxDOT for any purpose whatsoever. TxDOT assumes no responsibility for the conversion of this standard to other formats or for incorrect results or damages resulting from its use.

GENERAL:

I. SCOPE

Details herein apply to roadway lighting installations bid under the following Specification Items: Roadway Illumination Assemblies, Relocate Roadway Illumination Assemblies, Foundations for Signs, Traffic Signals and Roadway Illumination Assemblies, and Special Specifications relating to roadway lighting. All work, materials and services not shown on the plans which may be necessary for complete and proper construction shall be performed, furnished and installed by the Contractor. Faulty fabrication or poor workmanship in any material, equipment or installation will be considered justification for rejection. Material and installation shall comply with the applicable provisions of the National Electrical Code, National Electrical Manufacturers Association and, when required, Underwriters Laboratories standards. Where manufacturer's provide warranties or guarantees as a customary trade practice, Contractor shall furnish to the State such warranties or guarantees. 1

The location of poles and fixtures are diagrammatic only and may be shifted by the Engineer to accommodate local conditions. Erection and/or removal of poles and luminaires located near overhead electrical lines shall be accomplished using established industry and utility safety practices and in accordance with laws governing such work. The Contractor shall consult with the appropriate utility company prior to beginning such work.

II. ROADWAY ILLUMINATION ASSEMBLIES

A. General

1. Structural Support Design for Luminaires. Lighting standards shall be designed in accordance with the latest issue of the AASHTO "Standard Specifications for Structural Supports for Highway Signs, Luminaires and Traffic Signals." All poles shall be designed for 80 mph wind loads. An additional 1.3 gust factor shall be applied to the wind loads. For transformer base poles, fabricator shall include transformer base and connecting hardware in design calculations and shop drawing submittals. Manufacturer's shop drawings shall include the ASTM designations for all material to be used. See paragraph II. B. for additional requirements for the transformer base.

2. Slip Joint Poles. Poles may be fabricated in two sections and field-assembled by the lap-joint method. The two sections shall telescope together with a lap length of not less than 1-1/2 times the shaft diameter at the lap joint. The longitudinal seam weld on the outer shaft at the slip joint end shall be a full penetration weld for a minimum of the slip joint length plus 6 inches.

3. Mast Arm Attachments. All poles and attachments shall be structurally designed to support two 12-foot mast arms and luminaires. Poles shall be supplied with mast arm combinations as shown in the plans. All mast arms shall be designed for a 55-pound luminaire having an effective projected area of 1.4 square feet.

4. Minor Damage Repair. The finished pole shall have a smooth, uniform finish free of pits, blisters, or other defects. Scratched, chipped, or damaged areas on galvanized poles and mast arms shall be thoroughly cleaned by wire brushing. The cleaned area shall be painted with two coats of zinc rich paint containing a minimum of 84% metallic zinc.

5. Pole Bonding Means. All shoe base poles, including poles on concrete traffic barriers, shall have a grounding lug with 1/2-13 NC female threads inside the pole near the hand hole, minimum of 3 full threads.

6. Hand Holes. All shoe base poles shall have hand holes with reinforcing frames and covers. The openings on all poles shall be approximately 4 inches x 10 inches located approximately 10 inches from the bottom of the pole and, except for poles mounted on concrete traffic barrier, shall be placed 90 degrees to mast arm unless otherwise noted on the plans. For poles mounted on concrete median barrier, all hand holes shall be on the same side of the median.

7. CTB Poles. Poles installed on concrete traffic barrier shall also meet the requirements of CTB details.

8. J-Hooks. All poles shall be equipped with a J-hook inside the pole, near the top for supporting vertical conductors.

9. Base Plate Bolt Circle. Bolt circles for poles mounted on CTB, see CTBI (4) or SSCB (4). Poles placed on existing bridge brackets or existing foundations, bolt circle shall be coordinated with anchor bolts in place. For other bolt circles, See RID (3).

10. Steel Poles.

a. Steel poles shall be fabricated in accordance with the Item "Steel Structures." Longitudinal seam welds for pole sections shall have 60% minimum penetration, except that weld shall be full penetration within 6 inches of circumferential base plate welds. All welding shall be in accordance with the ANSI/AWS Structural Code D1.1. Two-section poles joined by circumferential welds will not be permitted, unless otherwise shown on the plans. Unless otherwise shown on the plans, poles and hardware shall be galvanized in accordance with Item 445, "Galvanizing".

b. Pole components shall be constructed using the following materials:

Shaft: ASTM A-572 Grade 50 or ASTM A-595 Grade A (50 KSI min. yield) or ASTM A36M50.

Base Plate: ASTM A-27 Grade 65-35 or ASTM A-36.

Mast Arm Connector: ASTM A-27 Grade 65-35.

Mast Arms: Steel pipe ASTM A-53 Grade A or B or ASTM A-501 with 20% elongation in 2 inches or A-513 TY I with minimum 30 KSI yield and 15% elongation in 2 inches.

Pole Cap: Pole cap shall be zinc die-cast, aluminum, or galvanized metal, secured by three stainless steel or galvanized screws.

Pole Hardware: All bolts except mast arm connection bolts shall be stainless steel or standard steel galvanized ASTM A-153 Class C or D, or B-695 Class 50. Mast arm connection bolts shall be ASTM A-325, ASTM A-321 or ASTM A-193 Grade B-7, galvanized as above. Nuts and washers shall be compatible with the bolts and shall be stainless steel or steel, galvanized as above. Lock washers shall be provided on all bolted connections.

11. Aluminum Poles.

a. Aluminum poles shall be fabricated in accordance with "Structural Welding, Aluminum" ANSI/AWS D1.2.

b. Pole components shall be constructed using the following material:

Shaft: ASTM B-221 or B-241 Alloy 6063-T6, ASTM B-209 Alloy 5086-H34, ASTM B-221 Alloy 6005-T5.

Base Flange: ASTM B-26 Alloy 356.0-T6 or ASTM B-108 Alloy A356.0-T6 (Structural strength test required).

Mast Arm Fitting: ASTM B-209 Alloy 6061-T6 or ASTM B-221 Alloy 6005-T5.

Mast Arms: ASTM B-241 Alloy 6061-T6 or Alloy 6063-T6.

Pole Cap: ASTM B-209 Alloy 5086-H32 or ASTM B-108 or B-26 Alloy 356.0-T6.

Bolts: Stainless Steel AISI 300. Bolts threading into aluminum threads shall be treated with anti-seize compound, Never-Seez Compound, Permatex 133K or equal.

12. Alternate material equal to or better than material specified may be substituted with the approval of the Engineer.

13. Installation of high strength bolts. The tightening of nuts on high strength bolts shall be in accordance with the Item "Structural Bolting."

14. Roadway Illumination Assembly poles shall be erected plumb and true. Top of foundation shall be struck level so the pole will be plumb. Shoe base poles may use leveling nuts to plumb pole. Shims and leveling nuts shall not be used under transformer bases. Grout shall not be placed between base plate or flange and the foundation. 1

15. In each pole, continuous color-coded stranded No. 12 AWG copper Type XHHW or other approved XLP conductors shall be connected to the line side of each ballast.

16. Acorn nuts will not be allowed for attaching pole to transformer base or foundation. Nut covers will not be allowed.

17. Fabrication tolerances shall be as shown on Fabrication Tolerances Table.

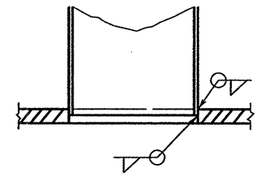

SECTION
POLE SHAFT TO BASE PLATE

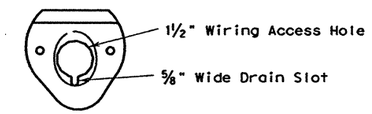

MAST ARM CONNECTOR

Steel Poles Only
Aluminum Pole Connector
Shall Be Clamp-on Type

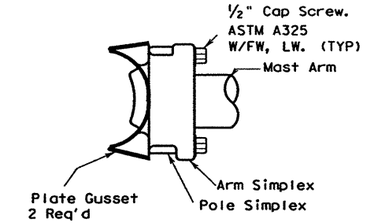

MAST ARM TO POLE
SHAFT CONNECTION

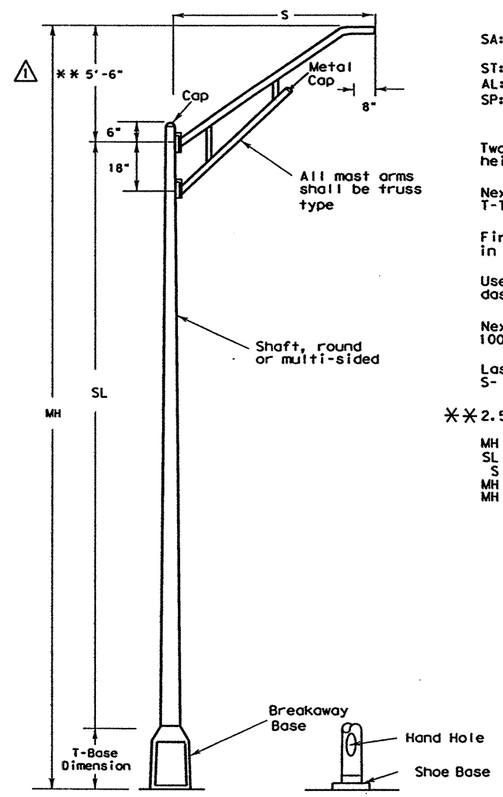

ROADWAY ILLUMINATION ASSEMBLY

EXPLANATION OF ROADWAY ILLUMINAION ASSEMBLY DESIGNATIONS

(TYPE SA 50 T - 8 - 8) (.4KW) S

SA: Pole and mast arm may be steel or aluminum.
ST: Pole and mast arm must be steel.
AL: Pole and mast arm must be aluminum.
SP: Special (ovalized) steel pole for installing on CTB. See standard sheet CTBI (4).

Two numerical digits denote mounting height in feet.

Next letter denotes type of base, (S- Shoe Base, T-Transformer Base or X-Base, B-Shoe Base Bridge Mount)

First number denotes length of mast arm in feet.

Use of second mast arm is indicated by second dashed number which denotes length in feet.

Next three figures indicate luminaire rating (1 KW= 1000 watts, .4 KW= 400 watts, etc.)

Last letter indicates the type of lamp (M- Mercury, S- High Pressure Sodium, L- Low Pressure Sodium).

**2.5' for poles with 4' mast arms.

MH = Mounting Height
SL = Shaft Length
S = Spread (Mast arm length)
MH = SL + 5' + (T-Base dimension)
MH = SL + 5' (Shoe Base)

1 10-98: change mast arm rise, rearrange notes; shims not allowed under T-base

STANDARD PLANS
TEXAS DEPARTMENT OF TRANSPORTATION
Traffic Operations Division

ROADWAY
ILLUMINATION
DETAILS

RID(1)-98

©TxDOT January 1992	DN: RS	CK: KB	DW: FDN	CK: RS	MSG NO.:
REVISIONS 5-93 10-93 10-98	STATE DISTRICT 22	FEDERAL REGION 6	FEDERAL AID PROJECT NH-2002 (79)		SHEET 765
	COUNTY WEBB		CONTROL 0018	SECT 05	JOB 062. ETC
					HIGHWAY IH 35

LEVELS DISPLAYED
DATE:
ACC: d58hplc/usr/d580504
FILE:
DN: LR
CK: CW
DW: DN
CK: MT
HOUFILE023 \hcivil\cf0130\ 4/18/2003
d34mop65.dgn-01

II. ROADWAY ILLUMINATION ASSEMBLIES (cont.)

B. Transformer Base

1. Transformer base shall be cast from aluminum, ASTM B-108 or B-26 Alloy 356.0-T6, or other material approved by the Engineer, and shall be furnished with eight 1/2 inch flat washers as recommended by the manufacturer. Transformer base bolt circles (Top and Bottom) shall match bolt circles for poles and foundations shown on RID (3).

2. Transformer base shall be approximately 15-20 inches high and shall have a door approximately 13 inches x 8 inches x 9 1/4 inches or as otherwise approved by the Engineer. Screw or bolts for attachment of door to base shall be stainless steel. Four machine bolts with four nuts, eight 1/2 inch flat washers and four lock washer, galvanized ASTM A-153 Class C or D, or B-695 Class 50, shall be provided with each transformer base for connecting the pole. Bolts shall be ASTM A325 or approved equal. Nuts shall be ASTM A-563 grade DH galvanized. A 1/2-13 NC female threaded grounding lug shall be provided inside the transformer base near the bottom.

3. The X-base shall be made from extruded aluminum channel and aluminum plate. The base breakaway features shall rely on bolt shear and not on bolt torque. Bolt shall have torque controlled break-off hex-head. Bolt shall be Aluminum Association type 2024-T4 aluminum. X-base channel shall be connected with aluminum bolts. Bolt shall be left hand thread and shall not be interchangeable with any other bolt not designed specifically for use with the X-base.

4. All breakaway bases shall meet the breakaway requirements of the AASTHO "Standard Specifications for Structural Supports for Highway Signs, Luminaires and Traffic Signals," latest edition, and shall have been tested by FHWA-approved methods. All bases shall have been structurally tested to meet or exceed the full designed plastic moment capacity of the pole. Certification of the plastic moment load test and FHWA breakaway requirement test of the model of base being furnished shall be submitted with shop drawings. Shop drawings shall show breakaway base model number and manufacturer's name or logo.

5. Bases shall be stamped, incised or by other approved permanent means, marked to show fabricator's name or logo, and model number. Such information shall be placed in a readily seen location, inside or outside the base, but shall not be placed on the door.

6. Doors for transformer bases shall be made of plastic, fiberglass or other non-aluminum material approved by the Engineer. Transformer bases shall be cleaned by grit blast cleaning after heat treatment. Certification by the manufacturer of heat treatment shall be furnished with transformer bases. The certification shall show the metal alloy and temper and that the base meets those requirements, chemical and physical. The certification shall also show the material ASTM specification. Transformer bases shall be cast with a removable tab bar for material testing. Some bars may have been removed by the manufacturer for testing.

C. All Luminaires.

1. The luminaire housing shall be cast or drawn from a non-ferrous alloy and shall be free of cracks and excessive porosity. All nuts, screws, clips, washers and attaching hardware shall be made of stainless steel; steel electro-zinc-plated, minimum thickness 0.0002 inches with olive green drab or yellow chromate conversion coating; steel coated with an acidic chromate-phosphate-binder system primer, top coated with a polytetrafluoroethylene modified silicon primer, bright metallic in color, meeting the requirements of General Motors automotive specification GM 164M; or other approved conversion coatings except that brackets may be made from pre-galvanized steel. All threaded surfaces used in the housing shall be lubricated with a silicone grease.

2. The slipfitter shall securely clamp the luminaire to the mast arm. A positive means of vertical adjustments shall be provided. The refractor or lens shall be clear glass. The optic assembly shall be provided with resilient gaskets and so constructed that a positive seal against weather and other contaminants will be maintained. The latch shall provide a positive means of maintaining closure of the luminaire. The socket shell shall be nickel plated and shall be rigidly attached to a high grade porcelain mogul base which shall extend and enclose the metal shell. A locking means shall be incorporated in the shell of the socket to positively resist the removal of the lamp. Reflectors shall be polished aluminum with Alzak or equal coating and shall not be painted.

3. Mast-arm mounted luminaires shall be provided with a leveling indicator which is clearly visible from the ground. Leveling indicator shall be sensitive to one (1) degree (maximum) changes in position at any point within five (5) degrees (minimum) level position. Unless otherwise directed by the Engineer, mast-arm mounted luminaires will be installed in the level position.

4. Underpass luminaires shall be fused internally. Fuses shall be 10 amp time-delay type.

5. The Contractor may be responsible for fixture testing costs. See Materials and Tests Section test method TEX-1110-T.

6. The Contractor shall furnish six (6) sets of submittals of the luminaire fixture to the Engineer at the project address. These submittals shall be approved by the Engineer before the Contractor begins work.

D. High Pressure Sodium Vapor Luminaires

1. Photometrics

a. The U/P (SPL-CO) (.15KW)S (TY 1) and (TY 2) underpass luminaires shall be 150 watt high pressure sodium, IES TYPE M-C with flat tempered glass lens. The fixtures shall provide a minimum measured intensity of 0.2 footcandle in a rectangular area measuring 120 feet x 30 feet, when mounted 20 feet above the midpoint of either long side of the surface area.

The maximum to minimum horizontal illuminance uniformity ratio shall not exceed 25:1 within the above mentioned rectangular area.

b. The 250-watt mast arm mounted luminaire shall be IES Type full cutoff and, when mounted 40 feet above the midpoint of either long side of a rectangular area 190 feet by 45 feet, shall provide a measured minimum intensity of 0.2 footcandle at any point on the surface of this area. Light intensities measured in footcandles along a line parallel to and 20 feet in from the long side of the previously defined rectangular area above which the luminaire is mounted shall decrease at a rate not to exceed 0.5 footcandle in any 10 foot interval along the aforementioned line from 10 to 90 feet on both sides of the luminaire and shall not be less than 0.3 footcandle at any point along such line.

The maximum to minimum horizontal illuminance uniformity ratio shall not exceed 15:1 within the above mentioned rectangular area.

c. The 400-watt mast arm mounted luminaire shall be IES Type full cutoff and, when mounted 50 foot above the midpoint of either long side of a rectangular area 220 feet by 60 feet, shall provide a measured minimum intensity of 0.2 footcandle at any point on the surface of this area. Light intensities measured in footcandles along a line parallel to and 30 feet in from the long side of the previously defined rectangular area above which the luminaire is mounted shall decrease at a rate not to exceed 0.5 footcandle in any 10 foot interval along the aforementioned line from 10 to 90 feet on both sides of the luminaire and shall not be less than 0.3 footcandle at any point along such line.

The maximum to minimum horizontal illuminance uniformity ratio shall not exceed 15:1 within the above mentioned rectangular area.

d. The luminaires shall meet the photometric requirements shown above, when energized at 100 percent of rated line voltage. Test will be run with the fixture in the level position as indicated on leveling indicator.

Fabrication Tolerances Table

Part	Dimension	Tolerance
Pole Asssembly	Shaft length	± 1"
	I.D. of outside piece of slip fitting pieces	+ 1/8 " - 1/16 "
	O.D. of inside piece of slip fitting pieces	+ 1/32 " - 1/8 "
	Shaft diameter: other	+ 3/16 "
	Out of "round"	1/4 "
	Straightness of shaft	± 1/4 " in 10 ft
	Twist in shaft	4° in 50 ft
	Perpendicular to baseplate	1/8 " in 24"
	Pole centered on baseplate	± 1/4 "
	Location of Attachments	± 1/4 "
Arm Assembly	Arm Length	± 3"
	Arm Rise	± 1 3/4 " in 10 ft
	Arm Diameter	± 3/16 "
	Overall length or width	± 1/4 "
	Thickness	+ 1/4 " - 1/16 "
	Deviation from flat	1/8 " in 12"
	Spacing between holes	± 3/32 "
	Anchor bolt hole size	± 1/16 "
Anchor Bolt	Length	+ 1" - 1/4 "
	Threaded length	+ 1 1/2 " - 1/8 "
	Galvanized length (if required)	+ 8" - 1/4 "
Miscellaneous	Bolt hole spacing	± 1/16 "
	Strut location in truss arms	± 1 1/2 "

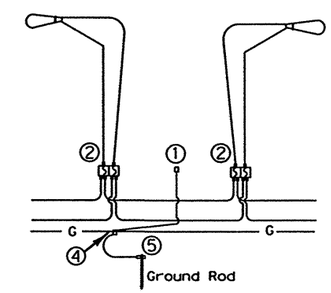

FOR THREE-WIRE CIRCUIT-CENTER GROUNDED

LUMINAIRES SERVED AT 480V ON 240/480 VOLT SERVICE OR LUMINAIRES SERVED AT 240V FOR FOR 120/240 VOLT SERVICE.

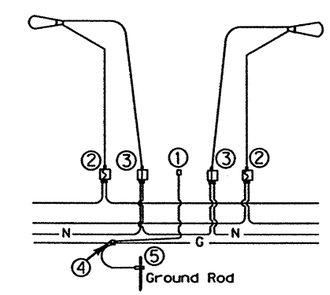

FOUR-WIRE CIRCUIT-CENTER GROUNDED

LUMINAIRES SERVED AT 240V (240/480 VOLT SERVICE)

NOTES:

① Pole Bonding Connector Blackburn TTC3 or Weaver TGC3 or equal.

② Fused Connector-All electrical connectors for breakaway poles shall be watertight and shall be designed as breakaway (Buchannan 65U, Bussmann HEBW, Littelfuse LEB or equal). All fuses shall be time-delay types. 10 Amp (Littelfuse FLQ, Bussman FNQ or equal).

*③ Un-fused Connector-All electrical connections for neutrals shall be watertight. For breakaway poles, connections shall be designed as breakaway, shall have a white color marking, and shall have a permanently installed solid neutral (Buchannan 20U, Bussmann HET, Littelfuse LET or equal). Dummy/Neutral fuse shall be Bussman NTS-R-3 or equal.

④ Split Bolt or other connector.

⑤ Ground Rod Clamp - Blackburn GG58H, Burndy GKP635, or equal.

*For Transformer Base Poles. On Shoe Base Poles omit un-fused connector for neutral conductor.

10-98: clarified T-base washers; mod. fixture requirements; removed two wire diagram; revised breakaway connectors requirements

STANDARD PLANS
TEXAS DEPARTMENT OF TRANSPORTATION
Traffic Operations Division

ROADWAY ILLUMINATION DETAILS

RID(2)-98

©TxDOT January 1992 DN: RS CK: KB DW: FDN CK: RS REG NO.:

REVISIONS 5-93 10-93 10-98

STATE DISTRICT	FEDERAL REGION	FEDERAL AID PROJECT	SHEET
22	6	NH-2002 (79)	766

COUNTY	CONTROL	SECT	JOB	HIGHWAY
WEBB	0018	05	062, ETC	IH 35

DISCLAIMER
The use of this standard is governed by the "Texas Engineering Practice Act". No warranty of any kind is made by TxDOT for any purpose whatsoever. TxDOT assumes no responsibility for the conversion of this standard to other formats or for incorrect results or damages resulting from its use.

DATE: ACC: d58hplc/usr/d580504 FILE:
DN: LR CK: CW DW: DN CK: MT

LEVELS DISPLAYED
1 2 3 4 5 6 7 8 9 10 11 12 13 14 15 16
17 18 19 20 21 22 23 24 25 26 27 28 29 30 31 32
33 34 35 36 37 38 39 40 41 42 43 44 45 46 47 48
49 50 51 52 53 54 55 56 57 58 59 60 61 62 63

II. ROADWAY ILLUMINATION ASSEMBLIES (cont.)

D. High pressure Sodium Vapor Luminaires (cont.)

2. Ballasts

a. All ballasts shall be isolated-winding lag-type magnetic regulators designed to operate high pressure sodium lamps unless otherwise shown on the plans.

b. When the circuit voltage indicated on the plans is applied, the ballast input wattage during fluctuations of the test voltage of +10 and -10 percent shall not exceed the following;

Nominal Lamp Rating, Watts	Maximum Wattage Input
150	220
250	440
400	552

c. During fluctuation of the test voltage of +10 and -10 percent, the lamp wattage fluctuation shall no exceed a total of 20 percent and ballast shall maintain lamp wattage within the following limits:

Nominal Lamp Watts	Minimum Lamp Watts	Maximum Lamp Watts
150	110	180
250	175	370
400	280	475

d. The power factor of any ballast when tested at the circuit voltage indicated in the plans shall be not less than 90 percent.

e. The electronic starting aid shall provide a starting pulse with an amplitude of 2500 volts minimum, 4000 volts maximum. The pulse width shall be a minimum of 0.8 microseconds at 2250 volts. The pulse shall occur when the open-circuit voltage is equal to or greater than 90 percent of peak open-circuit voltage. Pulse repetition rate shall be a minimum of one per cycle and pulse current shall be a minimum of 0.18 amperes. Electronic staring aids for mast-arm mounted poles shall be replaceable without the use of tools. The starting aid shall discontinue to pulse when the lamp starts.

f. Luminaires will be tested for satisfactory operation of the starter board under open-circuit (lamp-out) condition for a minimum of 72 hours. Any failures of starter boards will be considered grounds for rejection of the model starter board being supplied.

g. Ballasts shall permanently and clearly indicate the following: lamp type, catalog number, voltage rating, connection diagram, and manufacturer. Capacitors in all luminaires shall be non-PCB type.

3. Lamps

a. All lamps shall be new and shall be of recent manufacture.

b. 150 watt lamps shall be rated for 55 volts.

c. High pressure sodium lamps shall meet ANSI C78 requirements and shall be the type that extinguishes at the end of usable lamp life and remains extinguished without cycling. 400 watt lamps shall contain less than 4.0 mg of mercury, 250 watt lamps shall contain less than 3.0 mg of mercury. Lamps shall be lead free and shall pass the Federal Toxic Characteristic Leachate Procedure (TCLP).

4. Testing

a. Ballasts and luminaires will be tested using a lamp furnished for the same project.

b. Luminaires, ballasts, and lamps will be sampled and tested in accordance with the TXDOT Materials and Test Section's Manual of Testing Procedures.

III. ROADWAY ILLUMINATION ASSEMBLY FOUNDATIONS

A. Foundations will be paid for under the Item "Foundations for Signs, Traffic Signals and Roadway Illumination Assemblies", unless otherwise shown on the plans. Top 6 inches of foundation shall be formed and struck level.

B. Anchor bolts for all poles, except CTB-mounted poles, shall be A-36M55 Anchor Bolts. Anchor bolts for CTB mounted poles shall be steel, ASTM A-325 or A-321 threaded rod. Nuts for CTB anchor bolts shall be ASTM A-563 Grade D heavy hex, galvanized. The top 8 inches of all anchor bolts shall be galvanized per ASTM A-153. Anchor bolts in foundations shall be 1 1/4 inches x 30 inches for mounting heights 40 feet and greater, 1 inch x 30 inches for mounting heights less than 40 feet.* Anchor bolts shall have top end threaded not less than 5 inches and furnished with galvanized hex nuts, 1/2 inch flat washers (T-base), lock washers (shoe base) and template. The lower end of the bolt shall be threaded and furnished with nut and template. When bolts with rolled threads are furnished, bolt body need not be full size. See CTB and SSCB details for anchor bolts in concrete traffic barriers. Anchor bolts and nuts shall have Class 2A and 2B fit. Nuts shall be tapped and chased after galvanizing.

C. Concrete shall be Class A or C.

D. A minimum of two conduits shall be installed in each foundation. See lighting layout sheets for locations of foundations with more than two conduits. Any unused conduits in foundations shall be capped on both ends.

E. Unless otherwise dimensioned on the plans, breakaway roadway illumination assemblies should be located as shown in the placement table. Non-breakaway illumination assemblies should be protected from vehicular impact (i.e. 2 feet behind guard rail or mounted atop traffic barrier) or located outside the clear zone, except that 2.5 feet from curb face is minimum desired for light poles on city streets, 45 mph or less, see design guidelines for further information.

F. Anchor bolt template shall not be supplied with flat washers. Transformer base shall be held with 1/2 inch thick washers and nuts supplied with base. No washers or shims shall be used under transformer base.

G. Riprap shall be placed around the foundtion when called for elsewhere in the plans.

H. Conduit location in foundation is critical for new style breakaway devices. Conduits shall be placed 2 inches apart on centerline as shown in foundation details.

* Except that anchor bolts shall be 1 inch x 30 inches for all X-base poles.

Breakaway Pole Placement, see Para. III. E.	
Roadway Functional Classification	** Pole Offset (distance to transformer base, tolerance + 6in.-0in.)
Freeway mainlanes (roadways with full control of access)	15 ft (minimum and typical) from lane edge
All curbed, 45 mph or less design speed	2.5 ft minimum (15 ft desirable) from curb face
All others	10 ft minimum* (15 ft desirable) from lane edge

*or as close to ROW line as is practicable

**all breakaway poles should have 2/5 of the luminaire mounting height behind the pole for "falling area" to prevent encroachment on other travel lanes. See design guidelines.

PAY QUANTITY OF RIPRAP PER FOUNDATION		
FOUNDATION DIAMETER	RIPRAP DIAMETER	RIPRAP (CONC)(CL A)
30 in.	78 in.	0.35 CY

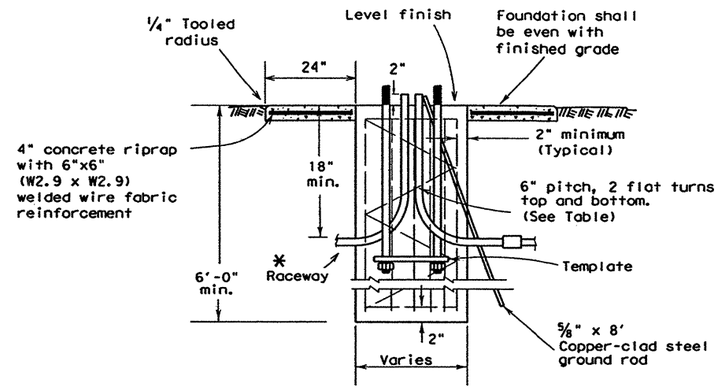

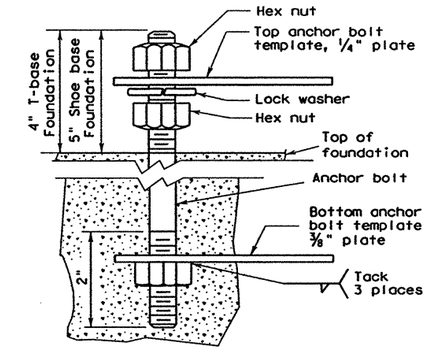

ANCHOR BOLT DETAIL

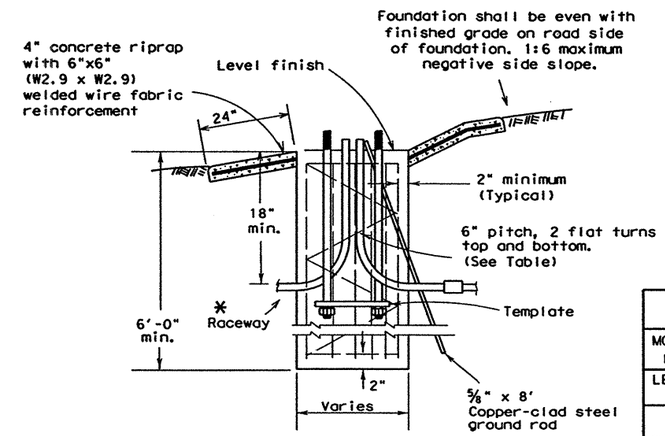

SECTION A-A

FOUNDATIONS				
FND. TYPE	DRILL SHAFT DIA.	DRILL SHAFT LENGTH	REINFORCING BAR	REINFORCING SPIRAL
A	30 in	6 ft	6-#4	#2
B	30 in	8 ft	6-#5	#2
C	30 in	10 ft	6-#6	#3

BOLT CIRCLES AND ANCHOR BOLTS				
MOUNTING HEIGHT	POLE BASE PLATE	BOLT CIRCLE SHOE BASE	BOLT CIRCLE *T-BASE	BOLT SIZE
LESS THAN 40 ft	13 in	13 in	14 in	1 in. X 30 in.
40 ft OR GREATER	15 in	15 in	17 1/4 in	** 1 1/4 in. X 30 in.

* AND X-BASE
** 1" FOR X-BASE

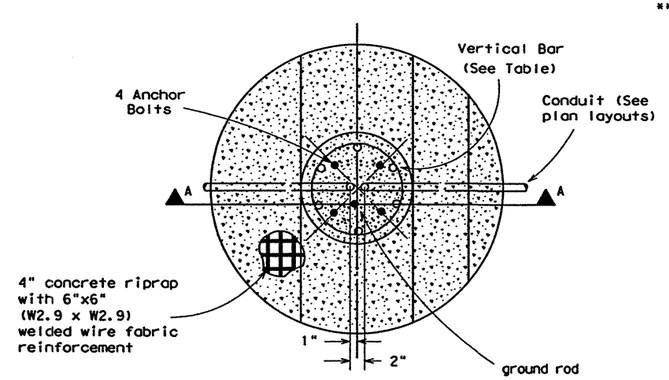

FOUNDATION DETAIL

* For duct cable, match duct size, see ED(10). For conductor in conduit system, same size as system conduit with standard radius bends.

STANDARD PLANS
TEXAS DEPARTMENT OF TRANSPORTATION
Traffic Operations Division

ROADWAY ILLUMINATION DETAILS

RID(3)-98

©TxDOT January 1992	DN:-RS	CK:-KB	DW:-FDN	CK:-RS	MSG NO.:

REVISIONS	STATE DISTRICT	FEDERAL REGION	FEDERAL AID PROJECT	SHEET
5-93	22	6	NH-2002 (79)	767
10-93	COUNTY	CONTROL	SECT / JOB	HIGHWAY
2-94	WEBB	0018	05 / 062, ETC	IH 35
10-98				

DISCLAIMER
The use of this standard is governed by the "Texas Engineering Practice Act". No warranty of any kind is made by TxDOT for any purpose whatsoever. TxDOT assumes no responsibility for the conversion of this standard to other formats or for incorrect results or damages resulting from its use.

DN: LR CK: CW DW: DN CK: MT
DATE: ACC: d58hplc/usr/d580504 FILE:
LEVELS DISPLAYED 1 2 3 4 5 6 7 8 9 10 11 12 13 14 15 16 17 18 19 20 21 22 23 24 25 26 27 28 29 30 31 32 33 34 35 36 37 38 39 40 41 42 43 44 45 46 47 48 49 50 51 52 53 54 55 56 57 58 59 60 61 62 63

b34mop67.dgn-01 HOUFILE023 \hcivil\cf0130\ 4/18/2003

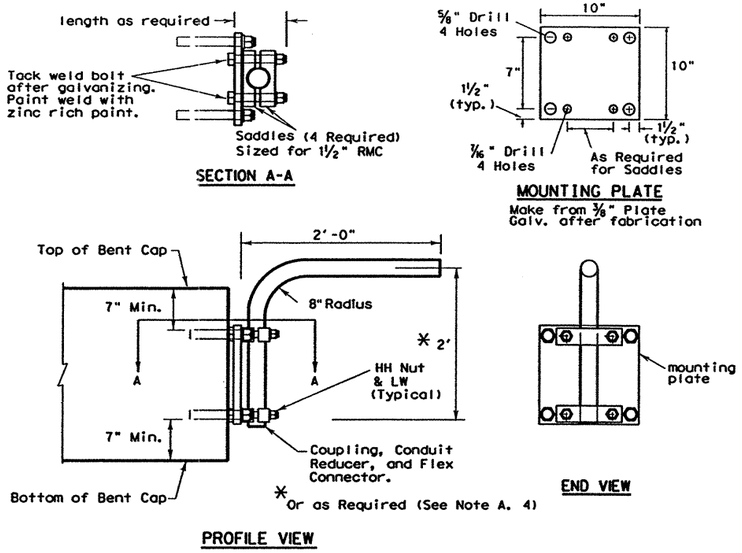

UNDERPASS LIGHTING ARM TYPE 1

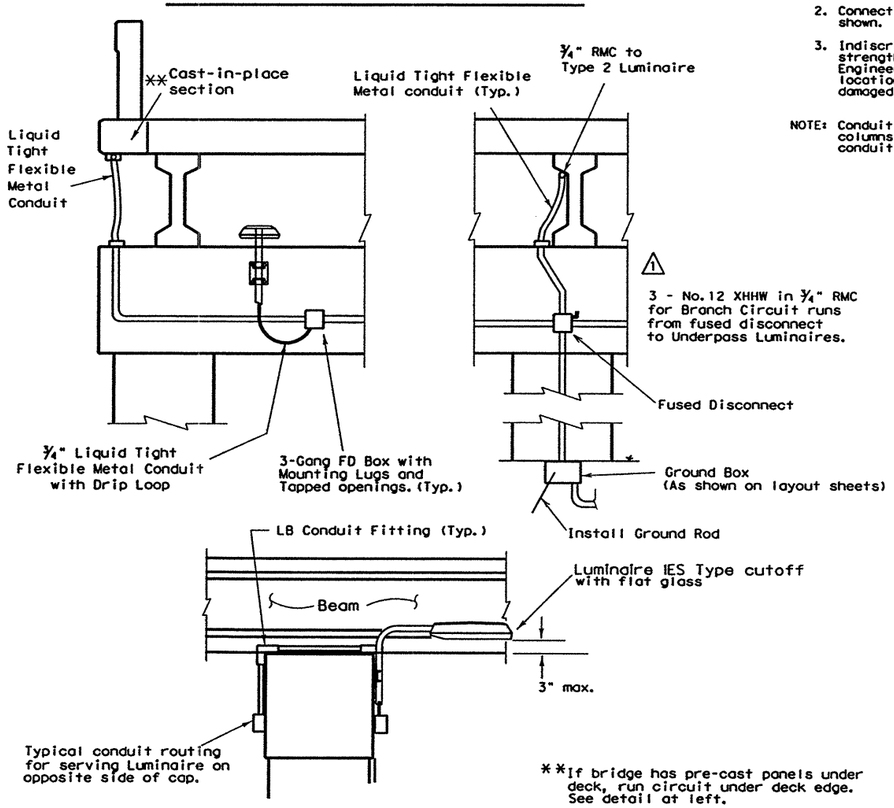

U/P (SPL-CO)(.15 KW)S(TYPE 1)

NOTES:

A. ALL LUMINAIRES

1. Luminaire locations, conduit and conductor sizes and routing are typical and diagrammatic only. See project layout sheets for specific details.
2. All conductors and conduit will be paid for under the items "Conduit" and "Electrical Conductor", unless otherwise shown on the plans. See lighting layout sheets.
3. A ground rod shall be installed and attached to the equipment grounding conductor in all ground boxes containing conduit that extends above grade six inches or more. All RMC in these boxes shall have grounding bushings and shall be properly bonded.
4. Adjust conduit in saddles to place fixture height and orientation as required. See fixture orientation detail and layout sheet. Where practicable place luminaires so the bottom of luminaire is above the bottom of the beam, maximum of 3 inches. (See detail.)
5. All bolts, nuts and washers shall be galvanized, ASTM A-153.
6. Fabrication of brackets and support arms will not be paid for directly but shall be subsidiary to Item 610, "Roadway Illumination Assemblies."
7. A Heavy Duty, 480 volt or 600 volt, 30 amp fused disconnect switch in NEMA 3R enclosure shall be installed in circuits to switch underpass luminaires. Switch shall be mounted 10 feet (minimum) above grade on columns or bent caps as approved by the Engineer. Contractor shall modify switch to allow padlocking in the "ON" and in the "OFF" positions. 20 amp fuses shall be installed. Furnishing and installing disconnect switches for underpass lighting fixtures shall not be paid for separately but shall be subsidiary to the various bid items of the contract. △1

B. TYPE 1

1. Type 1 arm shaft shall be 1 1/2 inch rigid metal conduit (1.90" O.D., 0.145" wall).
2. Anchor bolts for Type 1 luminaire shall be 3/8 inch bolt or stud expansion anchors with minimum pull out of 3000 lb each, with 4 inch minimum embedment, and lock washers.
3. Attach conduit to plate with 4 saddles, four 3/8" (min.) bolts, HHN & LW.

C. TYPE 2

1. Type 2 arm shaft shall be 2 inch rigid metal conduit (2.375" O.D., 0.154" wall). Reduce conduit length for Type C concrete beams. Field cutting and threading will be permitted. Paint cut and threaded areas with zinc rich paint after conduit is connected to adjacent fitting.
2. Connecting conduit may be strapped to tapered section only of precast beams as shown. Anchor as approved by the Engineer. Maximum anchor depth is 1 inch.
3. Indiscriminate drilling into precast concrete beams may result in reduced beam strength. Drilling location and method shall be only as directed by the Engineer. See location of underpass lighting mounting bracket detail. The locations given in the table are such that reinforcing strands will not be damaged.

NOTE: Conduit on Columns, Caps, and Slab is shown surface mounted. For all new columns and caps, Contractor shall embed conduit in concrete. Embedded conduit shall be PVC. Metal junction boxes and conduit shall be grounded.

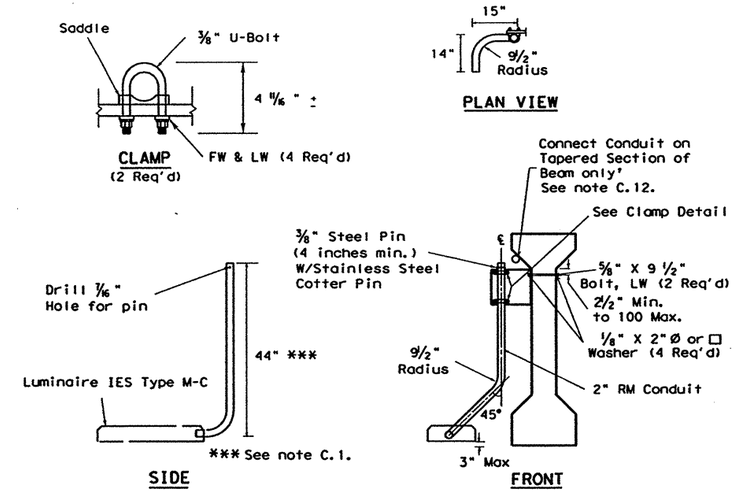

UNDERPASS LIGHTING ARM TYPE 2

Bridge Span Length	Minimum Distance From Bent Cap to Fixture Mounting Arm
≤ 50'	10'
50'-70'	15'
70'-90'	20'
>90'	25'

See detail below.

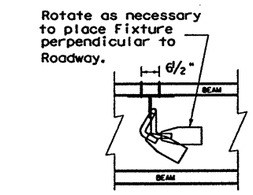

FIXTURE ORIENTATION
PLAN VIEW

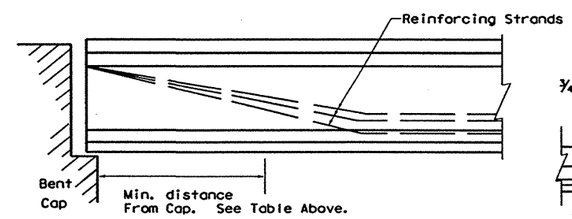

LOCATION OF UNDERPASS LIGHT MOUNTING BRACKET

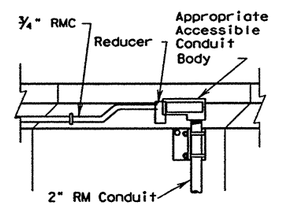

CONDUIT CONNECTION PROFILE
(TYPICAL)

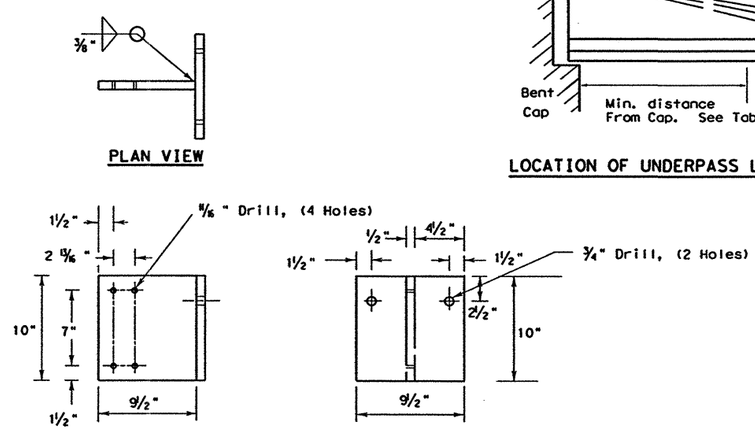

BRACKET DETAIL
Make from ½" Plate (ASTM A-36)
Galvanize after fabrication, ASTM A-123

U/P (SPL-CO)(.15 KW)S(TYPE 2)

△1 10-98: modified conduit arrangement

DISCLAIMER
The use of this standard is governed by the "Texas Engineering Practice Act". No warranty of any kind is made by TxDOT for any purpose whatsoever. TxDOT assumes no responsibility for the conversion of this standard to other formats or for incorrect results or damages resulting from its use.

DATE: ACC: d58hplc/usr/d580504 FILE:
DN: LR CK: CW DW: DN CK: MT

LEVELS DISPLAYED

STANDARD PLANS
TEXAS DEPARTMENT OF TRANSPORTATION
Traffic Operations Division

ROADWAY ILLUMINATION DETAILS

RID(4)-98

©TxDOT January 1992	DN-RS	CK-KB	DW-FDN	CK-RS	MEG NO.:

REVISIONS	STATE DISTRICT	FEDERAL REGION	FEDERAL AID PROJECT	SHEET
5-93	22	6	NH-2002 (79)	768
10-93	COUNTY		CONTROL SECT JOB	HIGHWAY
10-98	WEBB		0018 05 062, ETC	IH 35

HOUFILE023 \hcivil\cf0130\ 4/18/2003

DISCLAIMER
The use of this standard is governed by the "Texas Engineering Practice Act". No warranty of any kind is made by TxDOT for any purpose whatsoever. TxDOT assumes no responsibility for the conversion of this standard to other formats or for incorrect results or damages resulting from its use.

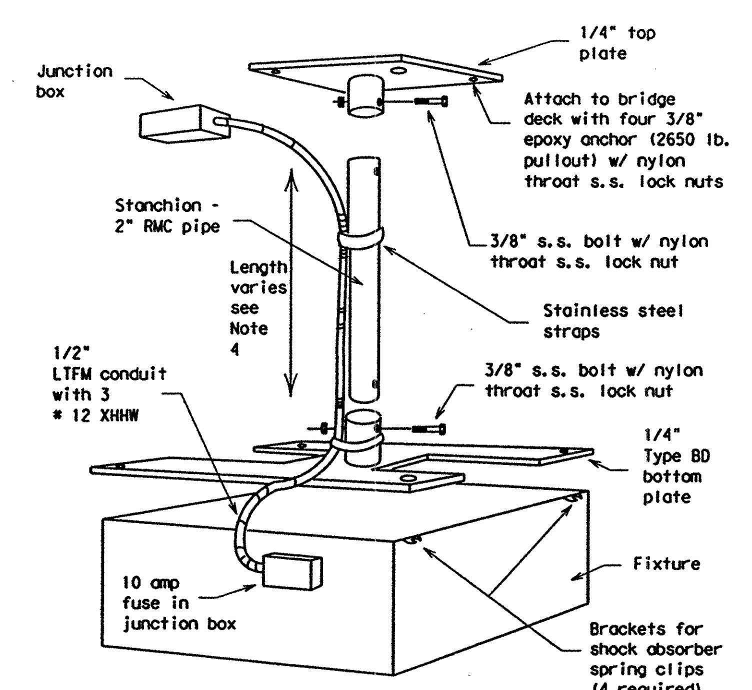

PERSPECTIVE TYPE BD
(BRIDGE DECK)

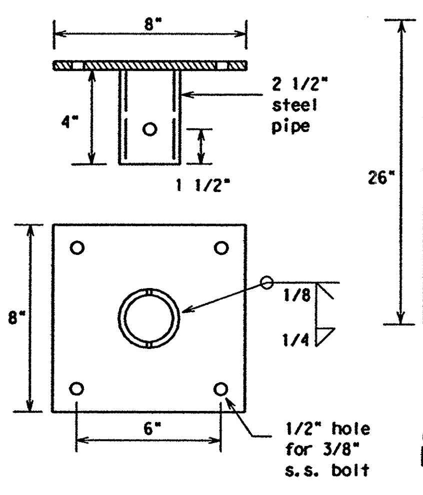

TOP PLATE - TYPE BD

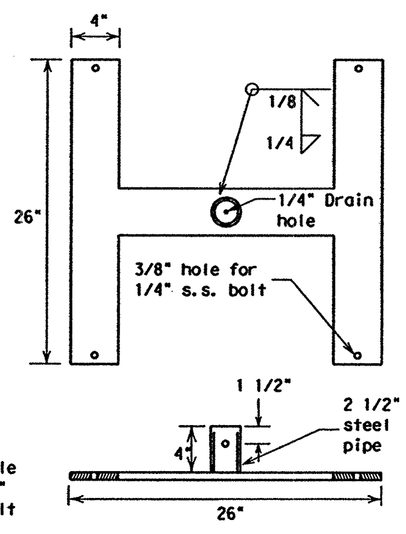

BOTTOM PLATE - TYPE BD

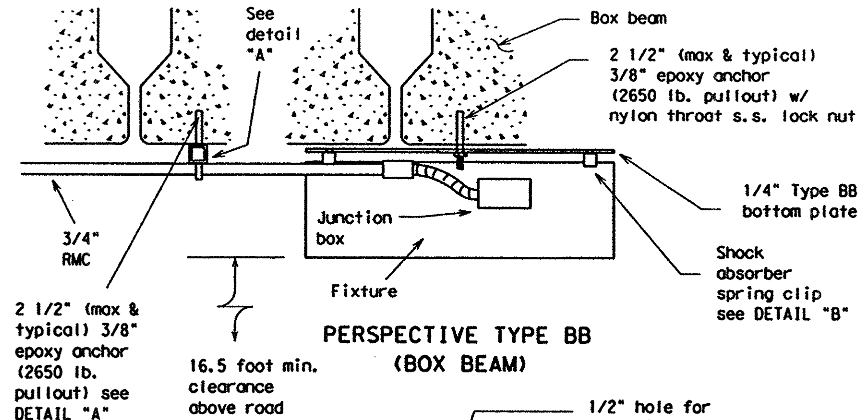

PERSPECTIVE TYPE BB
(BOX BEAM)

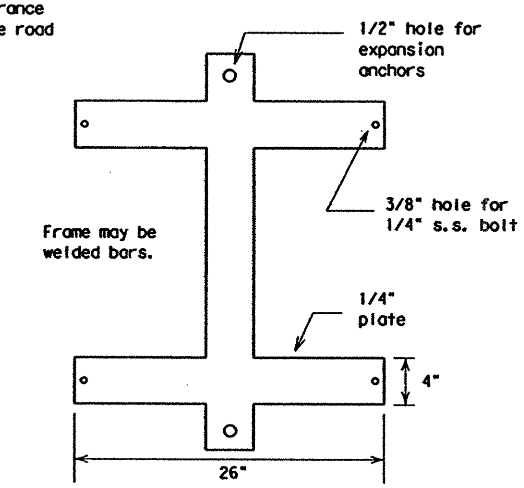

BOTTOM PLATE - TYPE BB

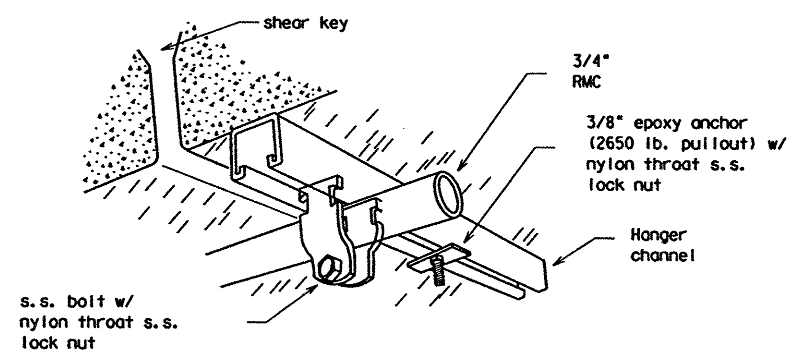

DETAIL "A"
Conduit attachment to box beam
(shown longer than necessary for clarity)

GENERAL NOTES:

1. These details apply to Roadway Illumination Assemblies bid under Item 610, "Roadway Illumination Assemblies," under the descriptive code, "Rdwy Ill Assem U/P Type IF." All associated hardware, mounting assemblies, parts, junction boxes, lamps, lenses, brackets, tools and labor required to install the underpass lighting assembly will not be paid for directly but shall be subsidiary to the various items of the contract, except that conduit, and conductors supplying the fixtures will be paid for separately. Mounting channel for conduit supports will not be paid for directly but shall be subsidiary to the various bid items of the contract.
2. See RID (4) for general routing of conduits under bridge structures. New bent caps and columns shall have conduit embedded in concrete. One disconnect switch shall be installed for each group of underpass luminaires at each underpass or as shown on the lighting layout sheets. Disconnect switches shall be mounted on bent cap or header walls as shown on the plans or as directed by the Engineer. Disconnect switches shall be 30 amps, of the voltage rating of the circuit, fused for 20 amps unless shown otherwise on the plans. Disconnect switches shall not be paid for directly but shall be subsidiary to the various items of the contract.
3. Indiscriminate drilling into pre-cast concrete beams will not be allowed. Drill only as shown or as specifically approved by the engineer.
4. Cut stanchion to position fixture even with bottom of beams. Adjust stanchion to seat all the way into the 2 1/2 inch pipe to reduce rattling, then field drill and pin with bolt as shown. Do not oversize hole for pin. Repair cut ends and drilled hole galvanizing with three coats zinc rich paint (dry completely between coats).
5. Hot dip galvanize all steel parts in accordance with Item 445, "Galvanizing."
6. Adjust stanchion for bracket Type WB for vertical stanchion with fixture even with bottom of beam.
7. Fixture shall meet the following requirements.
   a. Fixture shall be a maximum of 28 inches square and 10 inches deep (mounting feet and junction box may extend outside the 28 inch square).
   b. Fixture lamp(s) shall be one 150-watt Osram Sylvania Icetron induction fluorescent or one Philips QL 165 watt induction fluorescent. (240 volt or 120 volt only). External transformers will not be allowed.
   c. Fixture shall be a full cutoff flat glass luminaire emitting a symmetric or asymmetric light pattern. Reflector shall be polished aluminum and shall be at least 95% efficient in reflecting light. Fixture lens retainer shall be positioned so as to not block light emitted from the fixture, i.e. shall not protrude over the reflecting surface.
   d. When operating at 12,000 lumens and when mounted at 15 feet above the midpoint of a circular area, the radius of which is defined below, the fixture shall provide minimum light levels as shown below;
      i. 0.2 foot-candles in a 35 ft radius
      ii. 1.0 one foot-candle in a 22 ft radius
      iii. 2.0 foot-candles in a 19 ft radius
      iv. Maximum of 27.0 foot-candles at any point in a 35ft radius.
   e. Fixture photometrics shall match photometrics of published data.
   f. Housing shall be made from aluminum sheeting (0.10 inch min), or stainless steel (14 ga. Min). All seams shall be continuously welded. Fixture housing shall be sturdy and of good workmanship. Fixture housing shall have external mounting feet. Housing shall not have any penetrations except that wiring from the external junction box may penetrate to the ballast compartment. Such penetration shall be factory sealed with potting compound or CGB connector. All openings or construction joints in housing shall be effectively sealed.
   g. Lens shall be heat tempered C73 prismatic flat glass, minimum 5/32 inch thick. Lens frame shall be sealed with continuous closed cell neoprene (EDPM) or silicon gasket material as approved by the engineer. Gasket shall be a minimum of 9/16 inch wide and 1/8 inch thick. Lens frame shall contact gasket with a minimum 9/16 inch return flange footing. Frame and housing shall have welded seams ground flush to provide flat surface for gasket contact. Lens shall be securely screwed to the housing with a minimum of 8 number 10 stainless steel screws. Screws shall have Teflon, neoprene, or silicon washers. In addition, the lens frame shall be sealed shut at the factory with RTV 501 sealant.
   h. Wire attachment shall be through a junction box rigidly secured to the side of the fixture housing. Junction box shall be a minimum of 3/16 inch thick aluminum (Adelet) or hot dipped galvanized cast iron walls (FD type) and shall have a threaded knockout for 3/4 inch conduit. Wiring entry into fixture shall be sealed with sealing compound in a minimum 1 inch length nipple or by use of a CGB connector when cord is used. Box back wall shall be sealed to the fixture housing with sealant.
   i. Fixtures shall be painted completely inside and outside with gray paint similar in color to "cobra head" luminaires. When other colors are shown on the plans, color shall be as approved by the engineer.
   j. Fixtures shall be certified, in writing, by the lamp manufacturer to be capable of sufficient heat dissipation. Certification shall be submitted for approval with fixture submittal. Icetron lamps shall be supported at each end of the lamp. Lamp manufacturer and fixture manufacturer shall provide a written 60,000-hour life replacement warranty for the fixture/lamp combination for the underpass installation conditions of this project. Lamps/fixture shall be considered failed if light output drops below 60% of rated lumens. Warranty shall be submitted for approval with the fixture submittal.
   k. Contractor shall make brochure submittal on the fixture to be provided. (Approved manufacturer's for these fixtures are Energy Plus, Kenall and Fail Safe/Cooper.) Fixture will be evaluated for construction quality and photometric performance. Submittals shall include all pertinent information including iso-footcandle array of each fixture for a 15 foot mounting height and iso-candela distribution curve for each fixture.
   l. All anchors into concrete shall be stainless steel and may be either expansion or epoxy, minimum 1000 lb. pull out, unless otherwise shown.
8. For box beam construction, if 16.5 foot clearance cannot be obtained, see Engineer for alternative underpass lighting.
9. Dimensions of brackets shall be adjusted as necessary to accomodate fixtures being supplied. Use Type BD for double T-beam mounting.

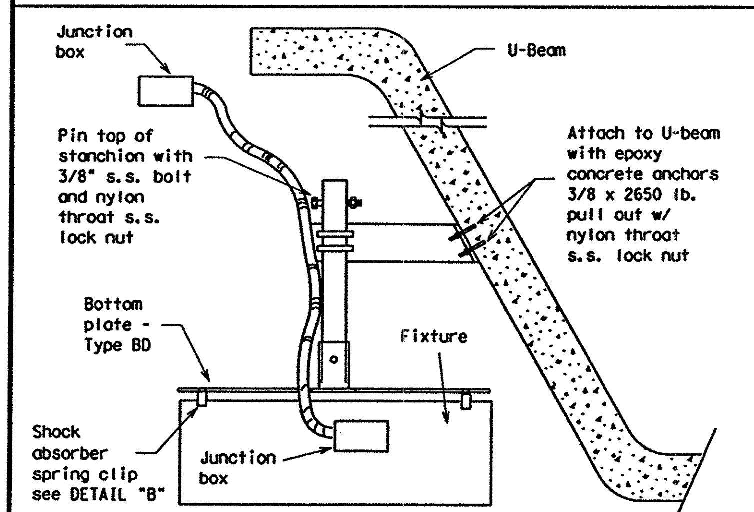

PERSPECTIVE TYPE UB - (U-BEAM)

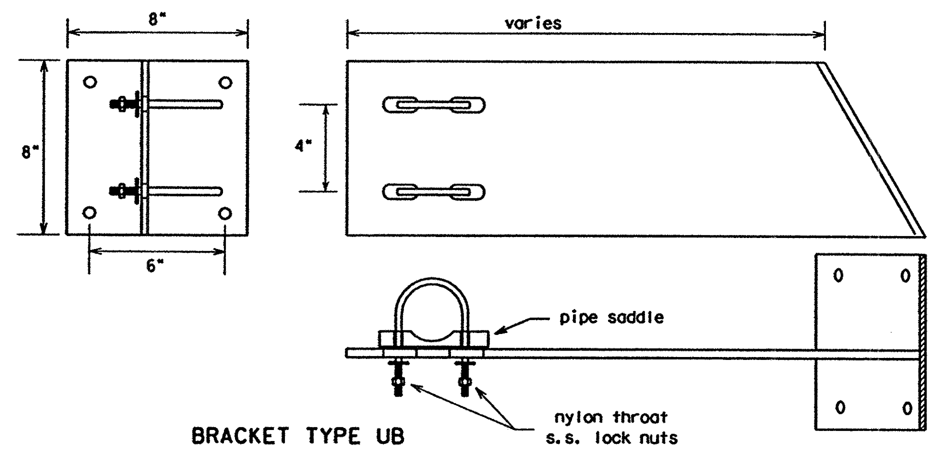

BRACKET TYPE UB

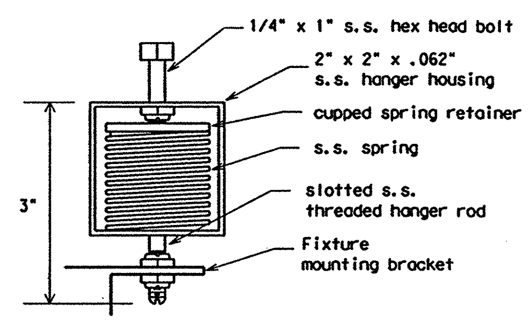

Spring clip shall be installed with three nylon throat s.s. lock nuts.

DETAIL "B"
SHOCK ABSORBER SPRING CLIP
(Hascall-Denke SLH002 or equal)

STANDARD PLANS
Texas Department of Transportation
Traffic Operations Division

ROADWAY ILLUMINATION DETAILS

RID(5)-02

©TxDOT June 2002	DN: KB	CK: -	DW: FDN	CK: CAL
REVISIONS	STATE DISTRICT: 22	FEDERAL REGION: 6	FEDERAL AID PROJECT: NH-2002 (79)	SHEET: 769
	COUNTY	CONTROL	SECTION / JOB	HIGHWAY

HOUFILE023 \hcivil\cf0130V4/18/2003 534mp160.dan-01

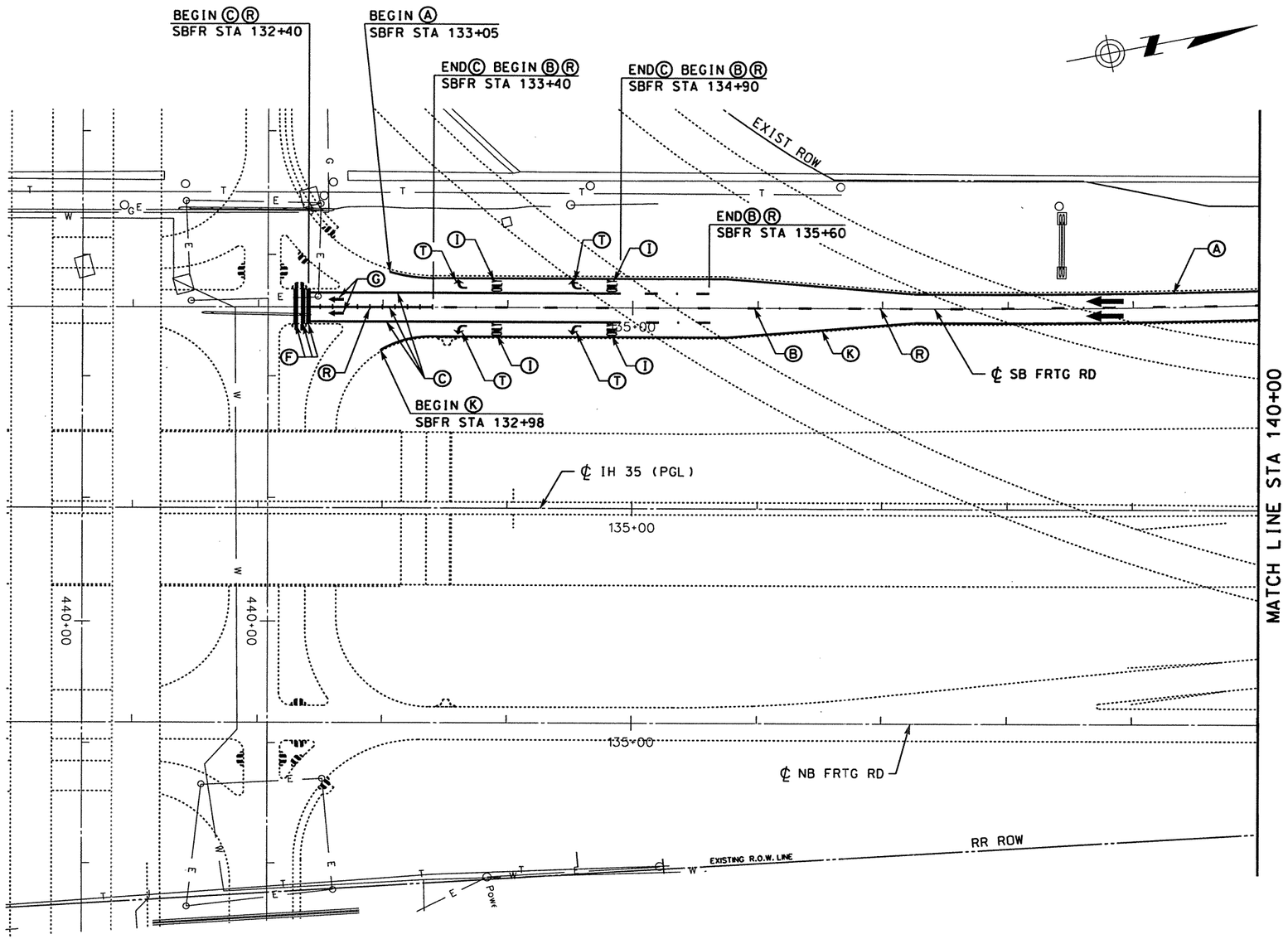

STRIPING LEGEND

- Ⓐ REFL PAV MRK TY I & II (W)(SLD)(4")
- Ⓑ REFL PAV MRK TY I & II (W)(BRK)(4")
- Ⓒ REFL PAV MRK TY I & II (W)(SLD)(8")
- Ⓓ REFL PAV MRK TY I & II (W)(DOT)(4")
- Ⓔ REFL PAV MRK TY I & II (W)(SLD)(12")
- Ⓕ REFL PAV MRK TY I & II (W)(SLD)(24")
- Ⓛ REFL PAV MRK TY I & II (W)(LNDP)(12")
- Ⓖ REFL PAV MRK TY I & II (W)(ARROW)
- Ⓗ REFL PAV MRK TY I & II (W)(DBL ARROW)
- Ⓣ REFL PAV MRK TY I & II (W)(TND ARROW)
- Ⓘ REFL PAV MRK TY I & II (W)(WORD)
- Ⓙ REFL PAV MRK TY I & II (W)(ENT GORE)
- Ⓚ REFL PAV MRK TY I & II (Y)(SLD)(4")
- Ⓜ REFL PAV MRK TY I & II (Y)(SLD)(8")
- Ⓝ REFL PAV MRK TY I & II (Y)(SLD)(12")
- Ⓢ REFL PAV MRK TY I & II (Y)(SLD)(24")
- Ⓓ RAIS PAV MRKR CL B (REFL) TY I-A
- Ⓡ RAIS PAV MRKR CL B (REFL) TY II-C-R
- Ⓞ RAIS PAV MRKR CL B (REFL) TY II-A-A

SIGNING AND DELINEATION LEGEND

- TRAFFIC FLOW ARROWS (~~PROPOSED~~)
- TRAFFIC FLOW ARROWS (EXISTING)
- (#) SMALL SIGN TO BE INSTALLED ITEM (644)
- (E) SIGN TO REMAIN IN PLACE
- (#) SIGN TO BE REMOVED ITEM (649)
- (#) SIGN TO BE RELOCATED (ITEM 649)
- L# LARGE SIGN TO BE INSTALLED
- SIGN POST FOR SMALL SIGN
- DOUBLE POSTED SIGN
- SIGN POST, BACK TO BACK SMALL SIGNS
- "K" MARKER
- DELINEATOR (D-SW) (A)
- DELINEATOR (D-SY) (A)
- DELINEATOR (D-DW) (A)
- OBJECT MARKER (OM-2VP)
- OBJECT MARKER (OM-2SR)
- OBJECT MARKER (OB-3B)

0 50 100
SCALE: 1" = 100'

STATE OF TEXAS
SIDNEY S. AFONSO
88055
REGISTERED PROFESSIONAL ENGINEER

THE SEAL APPEARING ON THIS DOCUMENT WAS AUTHORIZED BY SIDNEY S. AFONSO PE 88055, ON MAY 07, 2003

KBR
Engineered by KBR Technical Services, Inc

©2003 Texas Department of Transportation

IH 35
LOOP 20 TO UNIROYAL ROAD
SIGNING AND PAVEMENT MARKINGS
STA 130+00 TO
STA 140+00

SHEET 1 OF 33

FED RD DIV NO	FEDERAL AID PROJECT NO		SHEET NO
6	NH-2002 (79)		770
STATE	STATE DIST		COUNTY
TEXAS	LAREDO		WEBB
CONT	SECT	JOB	HIGHWAY NO
0018	05	062, ETC	IH 35

REF FILE(S): j011op01.uti, uti LV ON = 1-63
j011op01.eop, eop LV ON = 1-17,19-63
j011op01.bck, bck LV ON = 2,9,10,14,17,20,21,25,28
j011op01.alg, alg LV ON = 1-6,35-39
j011op01.bdr, bdr LV ON = 14,31,45,50,57,58,60-62
j011op01.spm, spm LV ON = 1-63
miloint.row, row LV ON = 1-22,24-63

b22lop34.dgn-03 HOUFILE023 \hcivil\cf0130\ 5/7/2003

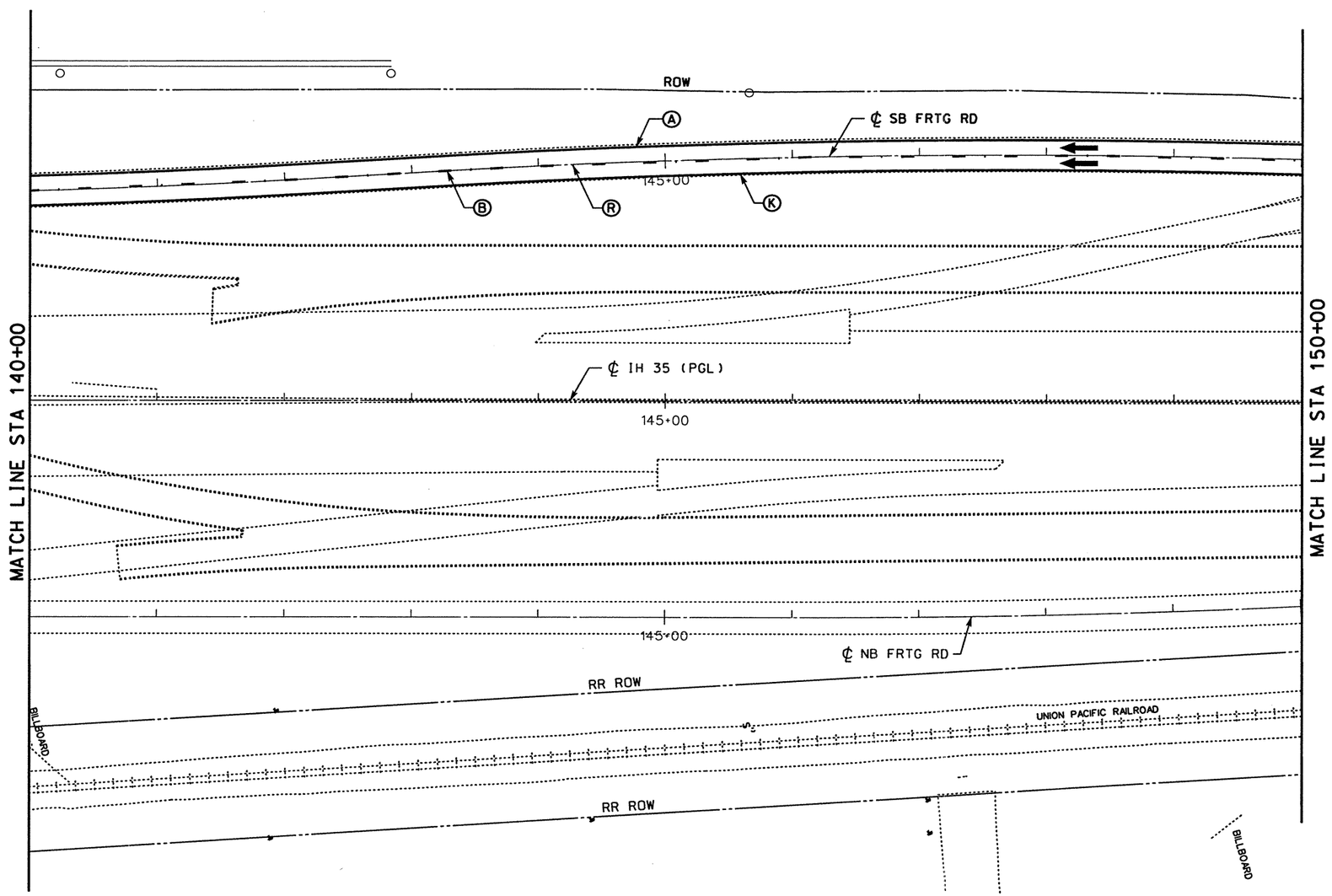

STRIPING LEGEND

- (A) REFL PAV MRK TY I & II (W)(SLD)(4")
- (B) REFL PAV MRK TY I & II (W)(BRK)(4")
- (C) REFL PAV MRK TY I & II (W)(SLD)(8")
- (D) REFL PAV MRK TY I & II (W)(DOT)(4")
- (E) REFL PAV MRK TY I & II (W)(SLD)(12")
- (F) REFL PAV MRK TY I & II (W)(SLD)(24")
- (L) REFL PAV MRK TY I & II (W)(LNDP)(12")
- (G) REFL PAV MRK TY I & II (W)(ARROW)
- (H) REFL PAV MRK TY I & II (W)(DBL ARROW)
- (T) REFL PAV MRK TY I & II (W)(TND ARROW)
- (I) REFL PAV MRK TY I & II (W)(WORD)
- (J) REFL PAV MRK TY I & II (W)(ENT GORE)
- (K) REFL PAV MRK TY I & II (Y)(SLD)(4")
- (M) REFL PAV MRK TY I & II (Y)(SLD)(8")
- (N) REFL PAV MRK TY I & II (Y)(SLD)(12")
- (S) REFL PAV MRK TY I & II (Y)(SLD)(24")
- (D) RAIS PAV MRKR CL B (REFL) TY I-A
- (R) RAIS PAV MRKR CL B (REFL) TY II-C-R
- (O) RAIS PAV MRKR CL B (REFL) TY II-A-A

SIGNING AND DELINEATION LEGEND

- TRAFFIC FLOW ARROWS (~~PROPOSED~~)
- TRAFFIC FLOW ARROWS (EXISTING)
- (#) SMALL SIGN TO BE INSTALLED ITEM (644)
- (E) SIGN TO REMAIN IN PLACE
- (#) SIGN TO BE REMOVED ITEM (649)
- (#) SIGN TO BE RELOCATED (ITEM 649)
- [L#] LARGE SIGN TO BE INSTALLED
- SIGN POST FOR SMALL SIGN
- DOUBLE POSTED SIGN
- SIGN POST, BACK TO BACK SMALL SIGNS
- "K" MARKER
- DELINEATOR (D-SW) (A)
- DELINEATOR (D-SY) (A)
- DELINEATOR (D-DW) (A)
- OBJECT MARKER (OM-2VP)
- OBJECT MARKER (OM-2SR)
- OBJECT MARKER (OB-3B)

0 50 100
SCALE: 1" = 100'

STATE OF TEXAS
SIDNEY S. AFONSO
PE 88055
REGISTERED PROFESSIONAL ENGINEER

THE SEAL APPEARING ON THIS DOCUMENT WAS AUTHORIZED BY SIDNEY S. AFONSO PE 88055, ON MAY 07, 2003

KBR
Engineered by KBR Technical Services, Inc

©2003 Texas Department of Transportation

IH 35
LOOP 20 TO UNIROYAL ROAD
SIGNING AND PAVEMENT MARKINGS
STA 140+00 TO
STA 150+00

SHEET 2 OF 33

FED RD DIV NO	FEDERAL AID PROJECT NO		SHEET NO
6	NH-2002 (79)		771
STATE	STATE DIST		COUNTY
TEXAS	LAREDO		WEBB
CONT	SECT	JOB	HIGHWAY NO
0018	05	062, ETC	IH 35

REF FILE(S): j01lop01.uti, uti LV ON = 1-63
j01lop01.eop, eop LV ON = 1-17,19-63
j01lop01.bck, bck LV ON = 2,9,10,14,17,20,21,25,28
j01lop01.alg, alg LV ON = 1-6,35-39
j01lop01.bdr, bdr LV ON = 14,31,45,50,57,58,60-62
j01lop01.spm, spm LV ON = 1-63
miloint.row , row LV ON = 1-22,24-63

b22lop35.dgn-02 HOUFILE023 \hcivil\cf0130\ 5/7/2003

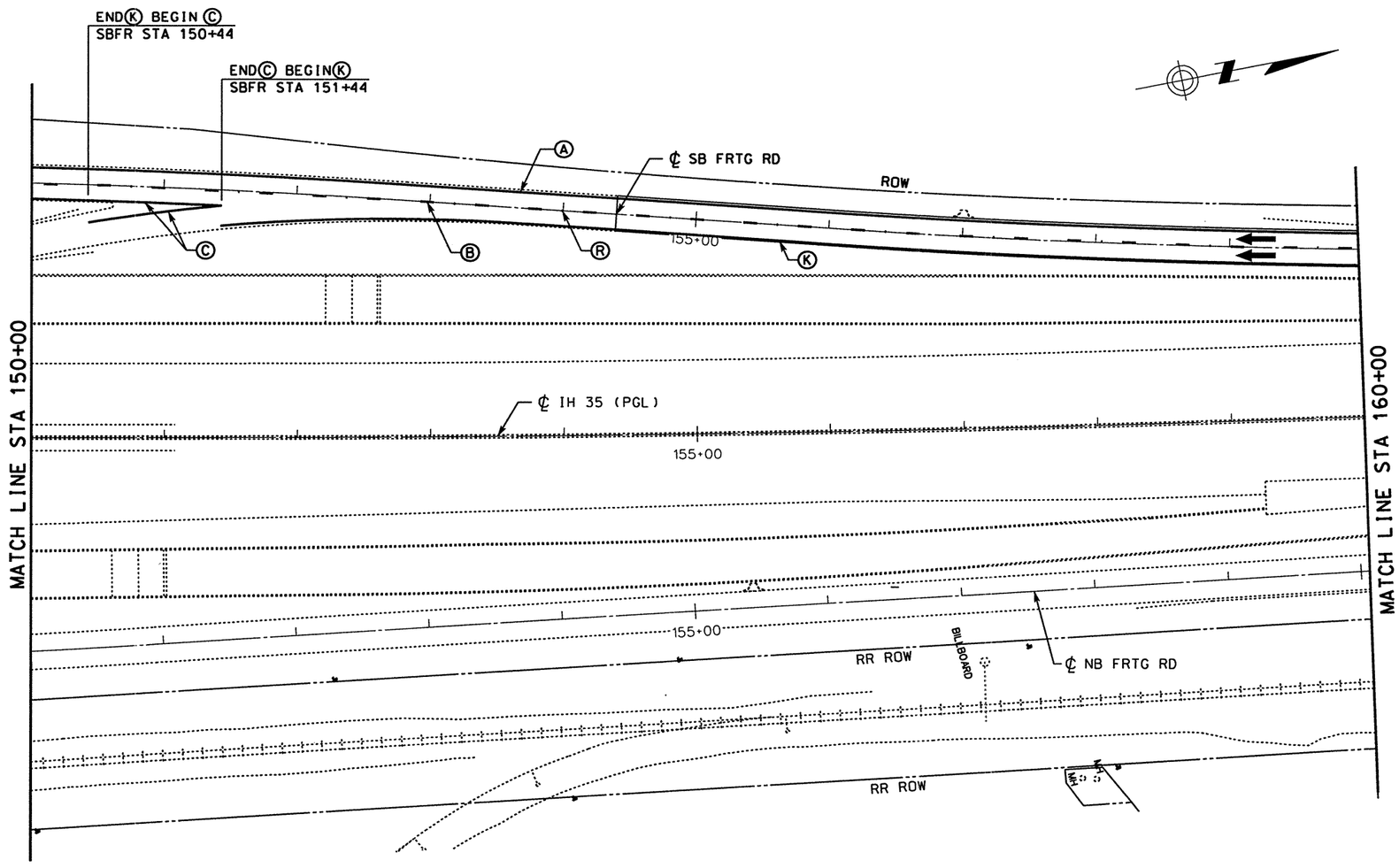

STRIPING LEGEND

- Ⓐ REFL PAV MRK TY I & II (W)(SLD)(4")
- Ⓑ REFL PAV MRK TY I & II (W)(BRK)(4")
- Ⓒ REFL PAV MRK TY I & II (W)(SLD)(8")
- Ⓓ REFL PAV MRK TY I & II (W)(DOT)(4")
- Ⓔ REFL PAV MRK TY I & II (W)(SLD)(12")
- Ⓕ REFL PAV MRK TY I & II (W)(SLD)(24")
- Ⓛ REFL PAV MRK TY I & II (W)(LNDP)(12")
- Ⓖ REFL PAV MRK TY I & II (W)(ARROW)
- Ⓗ REFL PAV MRK TY I & II (W)(DBL ARROW)
- Ⓣ REFL PAV MRK TY I & II (W)(TND ARROW)
- Ⓘ REFL PAV MRK TY I & II (W)(WORD)
- Ⓙ REFL PAV MRK TY I & II (W)(ENT GORE)
- Ⓚ REFL PAV MRK TY I & II (Y)(SLD)(4")
- Ⓜ REFL PAV MRK TY I & II (Y)(SLD)(8")
- Ⓝ REFL PAV MRK TY I & II (Y)(SLD)(12")
- Ⓢ REFL PAV MRK TY I & II (Y)(SLD)(24")
- Ⓓ RAIS PAV MRKR CL B (REFL) TY I-A
- Ⓡ RAIS PAV MRKR CL B (REFL) TY II-C-R
- Ⓞ RAIS PAV MRKR CL B (REFL) TY II-A-A

SIGNING AND DELINEATION LEGEND

- TRAFFIC FLOW ARROWS (~~PROPOSED~~)
- TRAFFIC FLOW ARROWS (EXISTING)
- (#) SMALL SIGN TO BE INSTALLED ITEM (644)
- (E) SIGN TO REMAIN IN PLACE
- (#) SIGN TO BE REMOVED ITEM (649)
- (#) SIGN TO BE RELOCATED (ITEM 649)
- [L#] LARGE SIGN TO BE INSTALLED
- SIGN POST FOR SMALL SIGN
- DOUBLE POSTED SIGN
- SIGN POST, BACK TO BACK SMALL SIGNS
- "K" MARKER
- DELINEATOR (D-SW) (A)
- DELINEATOR (D-SY) (A)
- DELINEATOR (D-DW) (A)
- OBJECT MARKER (OM-2VP)
- OBJECT MARKER (OM-2SR)
- OBJECT MARKER (OB-3B)

0 50 100
SCALE: 1" = 100'

STATE OF TEXAS
SIDNEY S. AFONSO
PE 88055
REGISTERED PROFESSIONAL ENGINEER

THE SEAL APPEARING ON THIS DOCUMENT WAS AUTHORIZED BY SIDNEY S. AFONSO PE 88055, ON MAY 07, 2003

KBR
Engineered by KBR Technical Services, Inc

©2003 Texas Department of Transportation

IH 35
LOOP 20 TO UNIROYAL ROAD
SIGNING AND PAVEMENT MARKINGS
STA 150+00 TO
STA 160+00

SHEET 3 OF 33

FED RD DIV NO	FEDERAL AID PROJECT NO		SHEET NO
6	NH-2002 (79)		772
STATE	STATE DIST		COUNTY
TEXAS	LAREDO		WEBB
CONT	SECT	JOB	HIGHWAY NO
0018	05	062, ETC	IH 35

REF FILE(S): j01lop01.utl, utl LV ON = 1-63
j01lop01.eop, eop LV ON = 1-17,19-63
j01lop01.bck, bck LV ON = 2,9,10,14,17,20,21,25,28
j01lop01.alg, alg LV ON = 1-6,35-39
j01lop01.bdr, bdr LV ON = 14,31,45,50,57,58,60-62
j01lop01.spm, spm LV ON = 1-63
milpoint.row , row LV ON = 1-22,24-63

b22lop36.dgn-02 HOUFILE023 \hcivil\cf0130\ 5/7/2003

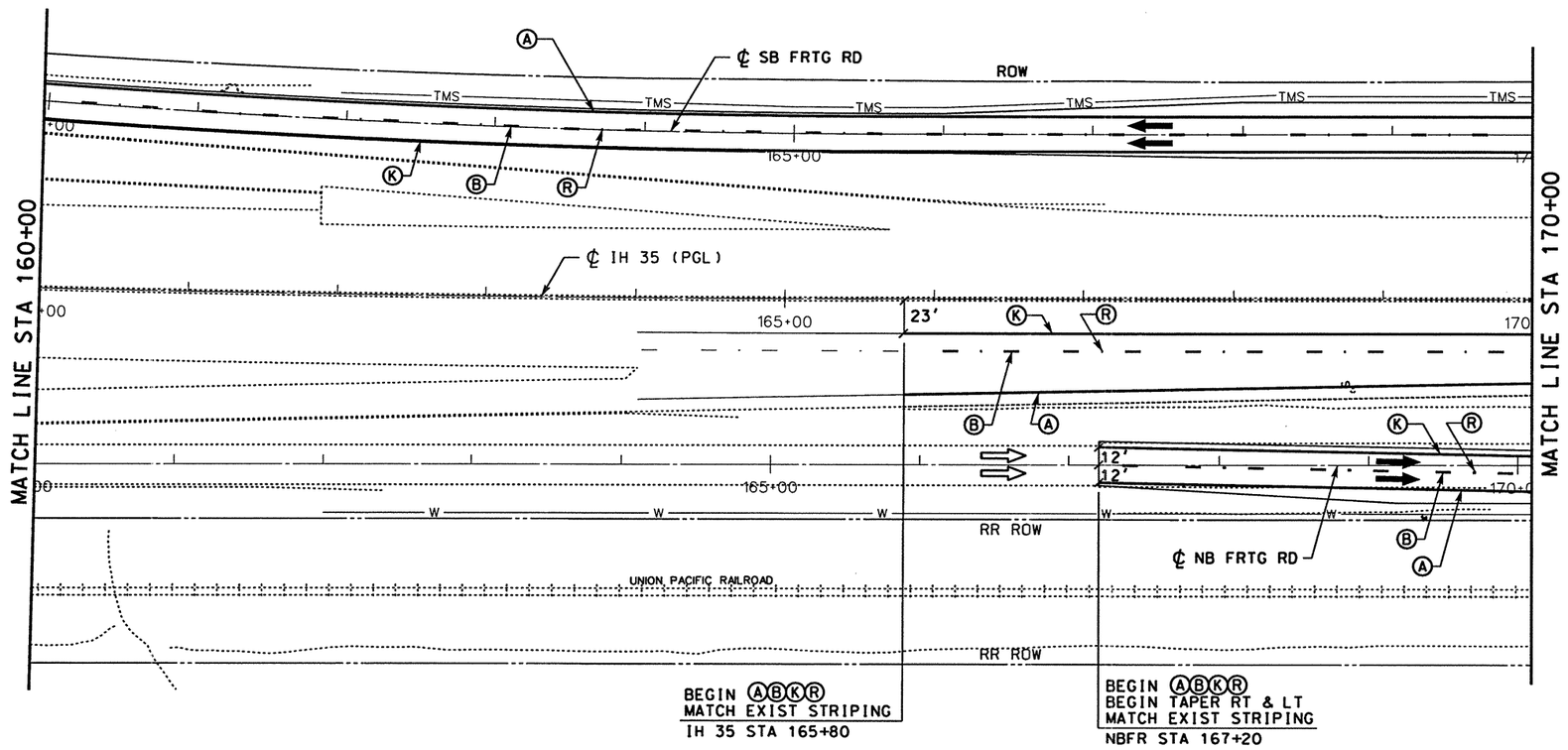

STRIPING LEGEND

- Ⓐ REFL PAV MRK TY I & II (W)(SLD)(4")
- Ⓑ REFL PAV MRK TY I & II (W)(BRK)(4")
- Ⓒ REFL PAV MRK TY I & II (W)(SLD)(8")
- Ⓓ REFL PAV MRK TY I & II (W)(DOT)(4")
- Ⓔ REFL PAV MRK TY I & II (W)(SLD)(12")
- Ⓕ REFL PAV MRK TY I & II (W)(SLD)(24")
- Ⓛ REFL PAV MRK TY I & II (W)(LNDP)(12")
- Ⓖ REFL PAV MRK TY I & II (W)(ARROW)
- Ⓗ REFL PAV MRK TY I & II (W)(DBL ARROW)
- Ⓣ REFL PAV MRK TY I & II (W)(TND ARROW)
- Ⓘ REFL PAV MRK TY I & II (W)(WORD)
- Ⓙ REFL PAV MRK TY I & II (W)(ENT GORE)
- Ⓚ REFL PAV MRK TY I & II (Y)(SLD)(4")
- Ⓜ REFL PAV MRK TY I & II (Y)(SLD)(8")
- Ⓝ REFL PAV MRK TY I & II (Y)(SLD)(12")
- Ⓢ REFL PAV MRK TY I & II (Y)(SLD)(24")
- Ⓓ RAIS PAV MRKR CL B (REFL) TY I-A
- Ⓡ RAIS PAV MRKR CL B (REFL) TY II-C-R
- Ⓞ RAIS PAV MRKR CL B (REFL) TY II-A-A

SIGNING AND DELINEATION LEGEND

- TRAFFIC FLOW ARROWS (~~PROPOSED~~)
- TRAFFIC FLOW ARROWS (EXISTING)
- # SMALL SIGN TO BE INSTALLED ITEM (644)
- Ⓔ SIGN TO REMAIN IN PLACE
- # SIGN TO BE REMOVED ITEM (649)
- # SIGN TO BE RELOCATED (ITEM 649)
- L# LARGE SIGN TO BE INSTALLED
- SIGN POST FOR SMALL SIGN
- DOUBLE POSTED SIGN
- SIGN POST, BACK TO BACK SMALL SIGNS
- "K" MARKER
- DELINEATOR (D-SW) (A)
- DELINEATOR (D-SY) (A)
- DELINEATOR (D-DW) (A)
- OBJECT MARKER (OM-2VP)
- OBJECT MARKER (OM-2SR)
- OBJECT MARKER (OB-3B)

0 50 100
SCALE: 1" = 100'

STATE OF TEXAS
SIDNEY S. AFONSO
88055
REGISTERED PROFESSIONAL ENGINEER

THE SEAL APPEARING ON THIS DOCUMENT WAS AUTHORIZED BY SIDNEY S. AFONSO PE 88055, ON MAY 07, 2003

KBR
Engineered by KBR Technical Services, Inc

©2003 Texas Department of Transportation

IH 35
LOOP 20 TO UNIROYAL ROAD
SIGNING AND PAVEMENT MARKINGS
STA 160+00 TO
STA 170+00

SHEET 4 OF 33

FED RD DIV NO	FEDERAL AID PROJECT NO		SHEET NO
6	NH-2002 (79)		773
STATE	STATE DIST		COUNTY
TEXAS	LAREDO		WEBB
CONT	SECT	JOB	HIGHWAY NO
0018	05	062, ETC	IH 35

5/7/2003
HOUFILE023 \hcivil\cf0130\
b22lop01.dgn-06

REF FILE(S): j01lop01.bdr, bdr LV ON = 14,31,45,50,57,58,60-62
j01lop01.alg, alg LV ON = 1-6,35-39
j01lop01.bck, bck LV ON = 2,9,10,14,17,20,21,25,28
j01lop01.eop, eop LV ON = 1-17,19-63
j01lop01.uti, uti LV ON = 1-63
j01lop01.spm, spm LV ON = 1-63
miloint.row, row LV ON = 1-22,24-63

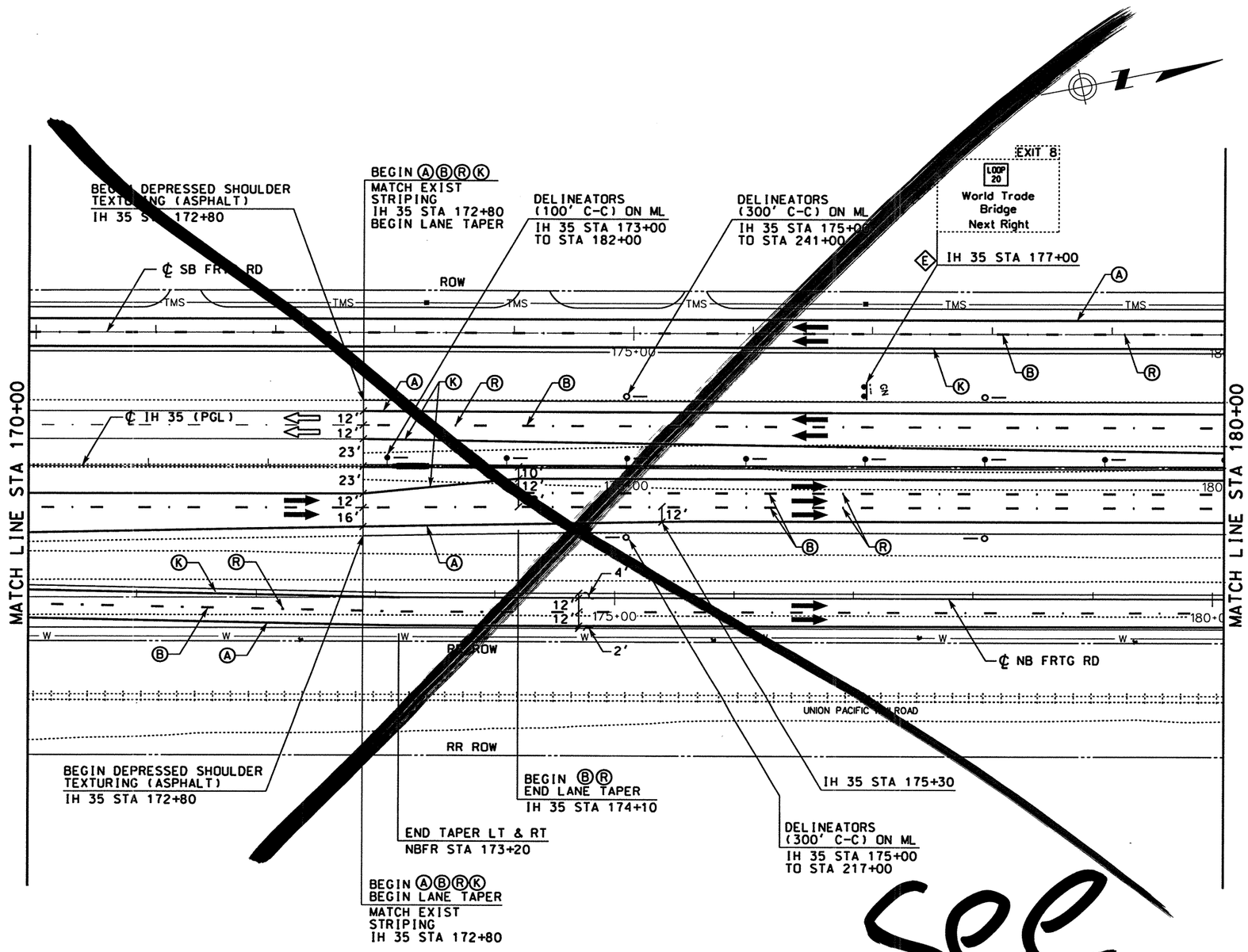

see next

STRIPING LEGEND

- Ⓐ REFL PAV MRK TY I & II (W)(SLD)(4")
- Ⓑ REFL PAV MRK TY I & II (W)(BRK)(4")
- Ⓒ REFL PAV MRK TY I & II (W)(SLD)(8")
- Ⓓ REFL PAV MRK TY I & II (W)(DOT)(4")
- Ⓔ REFL PAV MRK TY I & II (W)(SLD)(12")
- Ⓕ REFL PAV MRK TY I & II (W)(SLD)(24")
- Ⓛ REFL PAV MRK TY I & II (W)(LNDP)(12")
- Ⓖ REFL PAV MRK TY I & II (W)(ARROW)
- Ⓗ REFL PAV MRK TY I & II (W)(DBL ARROW)
- Ⓣ REFL PAV MRK TY I & II (W)(TND ARROW)
- Ⓘ REFL PAV MRK TY I & II (W)(WORD)
- Ⓙ REFL PAV MRK TY I & II (W)(ENT GORE)
- Ⓚ REFL PAV MRK TY I & II (Y)(SLD)(4")
- Ⓜ REFL PAV MRK TY I & II (Y)(SLD)(8")
- Ⓝ REFL PAV MRK TY I & II (Y)(SLD)(12")
- Ⓢ REFL PAV MRK TY I & II (Y)(SLD)(24")
- Ⓓ RAIS PAV MRKR CL B (REFL) TY I-A
- Ⓡ RAIS PAV MRKR CL B (REFL) TY II-C-R
- Ⓠ RAIS PAV MRKR CL B (REFL) TY II-A-A

SIGNING AND DELINEATION LEGEND

- TRAFFIC FLOW ARROWS (PROPOSED)
- TRAFFIC FLOW ARROWS (EXISTING)
- # SMALL SIGN TO BE INSTALLED ITEM (644)
- Ⓔ SIGN TO REMAIN IN PLACE
- # SIGN TO BE REMOVED ITEM (649)
- # SIGN TO BE RELOCATED (ITEM 649)
- L# LARGE SIGN TO BE INSTALLED
- SIGN POST FOR SMALL SIGN
- DOUBLE POSTED SIGN
- SIGN POST, BACK TO BACK SMALL SIGNS
- "K" MARKER
- DELINEATOR (D-SW) (A)
- DELINEATOR (D-SY) (A)
- DELINEATOR (D-DW) (A)
- OBJECT MARKER (OM-2VP)
- OBJECT MARKER (OM-2SR)
- OBJECT MARKER (OB-3B)

0 50 100
SCALE: 1" = 100'

STATE OF TEXAS
SIDNEY S. AFONSO
88055
REGISTERED PROFESSIONAL ENGINEER

THE SEAL APPEARING ON THIS DOCUMENT WAS AUTHORIZED BY SIDNEY S. AFONSO PE 88055, ON MAY 07, 2003

Sidney S. Afonso

KBR
Engineered by KBR Technical Services, Inc

©2003 Texas Department of Transportation

IH 35
LOOP 20 TO UNIROYAL ROAD
SIGNING AND PAVEMENT MARKINGS
STA 170+00 TO STA 180+00

SHEET 5 OF 33

FED RD DIV NO	FEDERAL AID PROJECT NO		SHEET NO
6	NH-2002 (79)		774
STATE	STATE DIST		COUNTY
TEXAS	LAREDO		WEBB
CONT	SECT	JOB	HIGHWAY NO
0018	05	062, ETC	IH 35

5/7/2003
HOUFILE023 \hcivil\cf0130\
b22lop02.dgn-06

REF FILE(S): j011op01.bdr, bdr LV ON = 14,31,45,50,57,58,60-62
j011op01.alg, alg LV ON = 1-6,35-39
j011op01.bck, bck LV ON = 2,9,10,14,17,20,21,25,28
j011op01.eop, eop LV ON = 1-17,19-63
j011op01.uti, uti LV ON = 1-63
j011op01.spm, spm LV ON = 1-63
milointi.row, row LV ON = 1-22,24-63

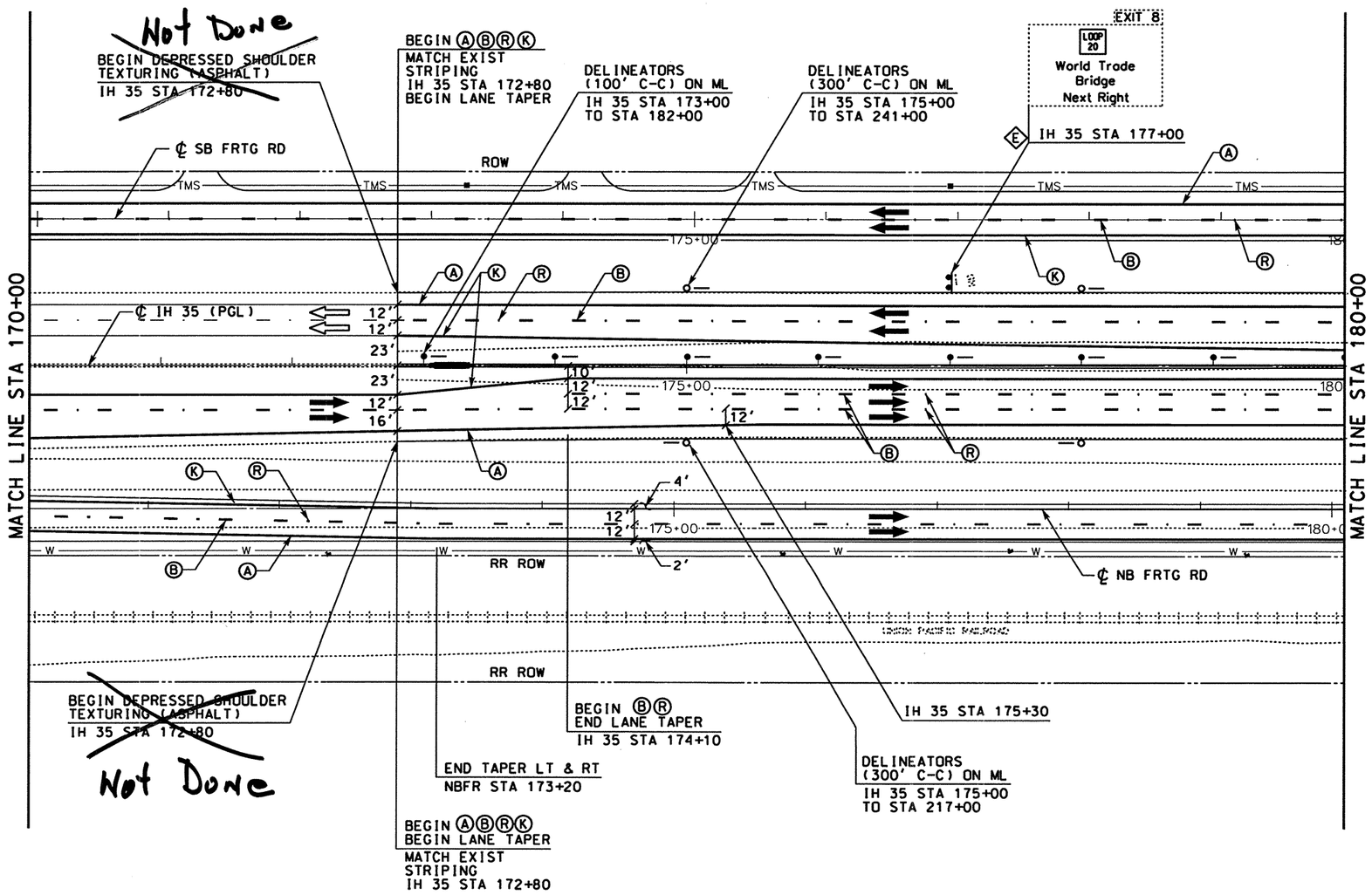

STRIPING LEGEND

- Ⓐ REFL PAV MRK TY I & II (W)(SLD)(4")
- Ⓑ REFL PAV MRK TY I & II (W)(BRK)(4")
- Ⓒ REFL PAV MRK TY I & II (W)(SLD)(8")
- Ⓓ REFL PAV MRK TY I & II (W)(DOT)(4")
- Ⓔ REFL PAV MRK TY I & II (W)(SLD)(12")
- Ⓕ REFL PAV MRK TY I & II (W)(SLD)(24")
- Ⓛ REFL PAV MRK TY I & II (W)(LNDP)(12")
- Ⓖ REFL PAV MRK TY I & II (W)(ARROW)
- Ⓗ REFL PAV MRK TY I & II (W)(DBL ARROW)
- Ⓣ REFL PAV MRK TY I & II (W)(TND ARROW)
- Ⓘ REFL PAV MRK TY I & II (W)(WORD)
- Ⓙ REFL PAV MRK TY I & II (W)(ENT GORE)
- Ⓚ REFL PAV MRK TY I & II (Y)(SLD)(4")
- Ⓜ REFL PAV MRK TY I & II (Y)(SLD)(8")
- Ⓝ REFL PAV MRK TY I & II (Y)(SLD)(12")
- Ⓢ REFL PAV MRK TY I & II (Y)(SLD)(24")
- Ⓞ RAIS PAV MRKR CL B (REFL) TY I-A
- Ⓡ RAIS PAV MRKR CL B (REFL) TY II-C-R
- Ⓞ RAIS PAV MRKR CL B (REFL) TY II-A-A

SIGNING AND DELINEATION LEGEND

- TRAFFIC FLOW ARROWS (~~PROPOSED~~)
- TRAFFIC FLOW ARROWS (EXISTING)
- SMALL SIGN TO BE INSTALLED ITEM (644)
- SIGN TO REMAIN IN PLACE
- SIGN TO BE REMOVED ITEM (649)
- SIGN TO BE RELOCATED (ITEM 649)
- LARGE SIGN TO BE INSTALLED
- SIGN POST FOR SMALL SIGN
- DOUBLE POSTED SIGN
- SIGN POST, BACK TO BACK SMALL SIGNS
- "K" MARKER
- DELINEATOR (D-SW) (A)
- DELINEATOR (D-SY) (A)
- DELINEATOR (D-DW) (A)
- OBJECT MARKER (OM-2VP)
- OBJECT MARKER (OM-2SR)
- OBJECT MARKER (OB-3B)

0 50 100
SCALE: 1" = 100'

STATE OF TEXAS
SIDNEY S. AFONSO
88055
REGISTERED PROFESSIONAL ENGINEER

THE SEAL APPEARING ON THIS DOCUMENT WAS AUTHORIZED BY SIDNEY S. AFONSO PE 88055, ON MARCH 05, 2004

KBR
Engineered by KBR Technical Services, Inc

©2003 Texas Department of Transportation

IH 35
LOOP 20 TO UNIROYAL ROAD
SIGNING AND PAVEMENT MARKINGS
STA 170+00 TO STA 180+00

SHEET 5 OF 33

FED RD DIV NO	FEDERAL AID PROJECT NO	SHEET NO
6	NH-2002 (79)	774

STATE	STATE DIST	COUNTY
TEXAS	LAREDO	WEBB

CONT	SECT	JOB	HIGHWAY NO
0018	05	062, ETC	IH 35

DATE	BY	REV	REVISION
02/17/04	AA	1	MAINLANE SHLDR WIDEN REV EDGE OF PAVEMENT AND PAVEMENT LIMITS

REF FILE(S): j01lop01.bdr, bdr LV ON = 14,31,45,50,57,58,60-62 j01lop01.bck, bck LV ON = 2,9,10,14,17,20,21,25,28 j01lop01.eop, eop LV ON = 1-17,19-63 j01lop01.uti, uti LV ON = 1-63
j01lop01.alg, alg LV ON = 1-6,35-39 j01lop01.spm, spm LV ON = 1-63
j01lop01.bdr, bdr LV ON = 14,31,45,50,57,58,60-62 miloint.row, row LV ON = 1-22,24-63

b22lop02.dgn-06 HOUFILE023 \hcivil\cf0130\ 3/4/2004

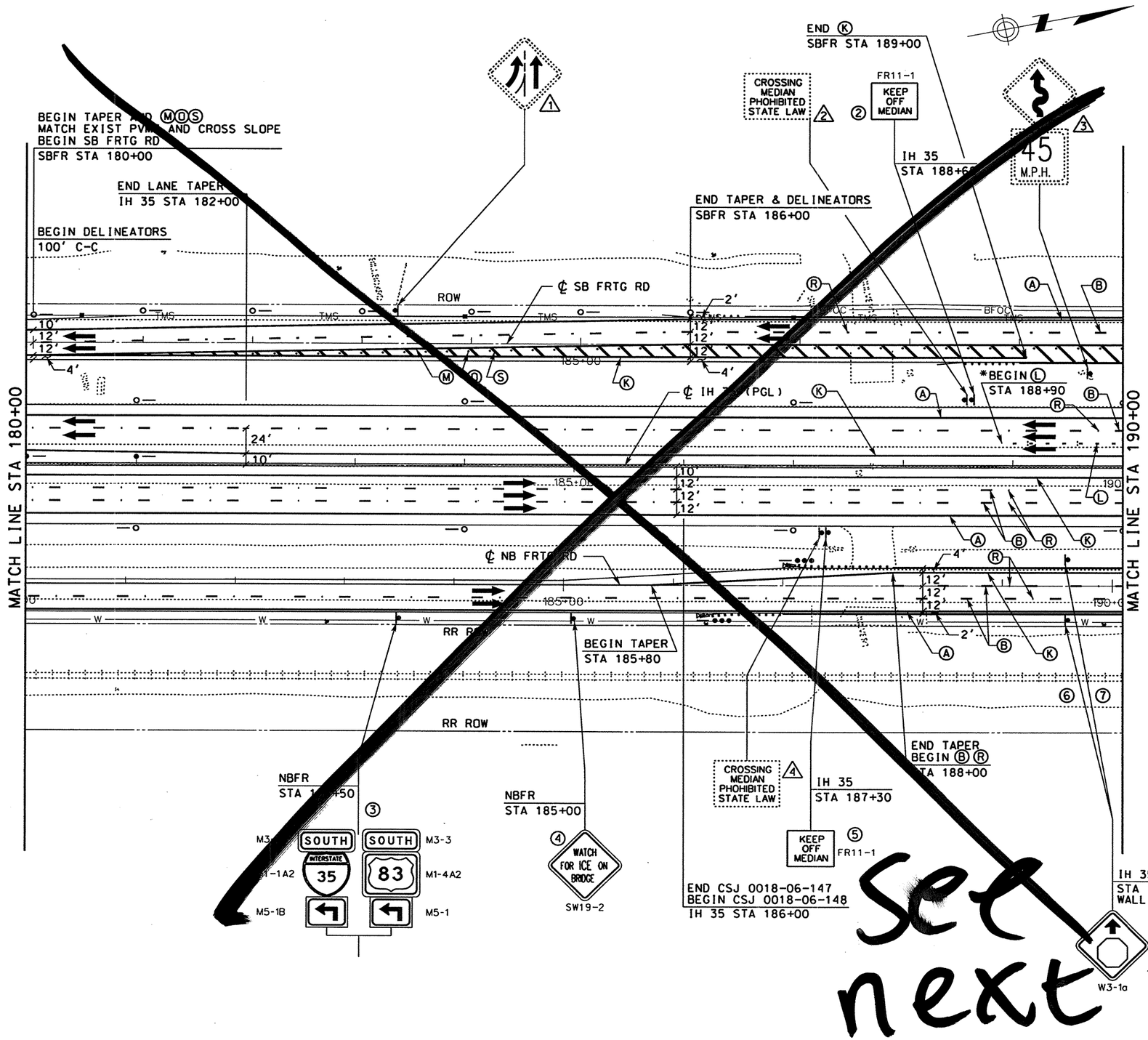

Set next

STRIPING LEGEND

- (A) REFL PAV MRK TY I & II (W)(SLD)(4")
- (B) REFL PAV MRK TY I & II (W)(BRK)(4")
- (C) REFL PAV MRK TY I & II (W)(SLD)(8")
- (D) REFL PAV MRK TY I & II (W)(DOT)(4")
- (E) REFL PAV MRK TY I & II (W)(SLD)(12")
- (F) REFL PAV MRK TY I & II (W)(SLD)(24")
- (L) REFL PAV MRK TY I & II (W)(LNDP)(12")
- (G) REFL PAV MRK TY I & II (W)(ARROW)
- (H) REFL PAV MRK TY I & II (W)(DBL ARROW)
- (T) REFL PAV MRK TY I & II (W)(TND ARROW)
- (I) REFL PAV MRK TY I & II (W)(WORD)
- (J) REFL PAV MRK TY I & II (W)(ENT GORE)
- (K) REFL PAV MRK TY I & II (Y)(SLD)(4")
- (M) REFL PAV MRK TY I & II (Y)(SLD)(8")
- (N) REFL PAV MRK TY I & II (Y)(SLD)(12")
- (S) REFL PAV MRK TY I & II (Y)(SLD)(24")
- (O) RAIS PAV MRKR CL B (REFL) TY I-A
- (R) RAIS PAV MRKR CL B (REFL) TY II-C-R
- (Q) RAIS PAV MRKR CL B (REFL) TY II-A-A

SIGNING AND DELINEATION LEGEND

- TRAFFIC FLOW ARROWS (PROPOSED)
- TRAFFIC FLOW ARROWS (EXISTING)
- (#) SMALL SIGN TO BE INSTALLED ITEM (644)
- (E) SIGN TO REMAIN IN PLACE
- (#) SIGN TO BE REMOVED ITEM (649)
- (#) SIGN TO BE RELOCATED (ITEM 649)
- L# LARGE SIGN TO BE INSTALLED
- SIGN POST FOR SMALL SIGN
- DOUBLE POSTED SIGN
- SIGN POST, BACK TO BACK SMALL SIGNS
- "K" MARKER
- DELINEATOR (D-SW) (A)
- DELINEATOR (D-SY) (A)
- DELINEATOR (D-DW) (A)
- OBJECT MARKER (OM-2VP)
- OBJECT MARKER (OM-2SR)
- OBJECT MARKER (OB-3B)

* NOTE: SEE MERGE RIGHT STANDARD FOR DETAILS.

0 50 100
SCALE: 1" = 100'

STATE OF TEXAS
SIDNEY S. AFONSO
88055
REGISTERED PROFESSIONAL ENGINEER

THE SEAL APPEARING ON THIS DOCUMENT WAS AUTHORIZED BY SIDNEY S. AFONSO PE 88055, ON MAY 30, 2003

KBR
Engineered by KBR Technical Services, Inc

©2003 Texas Department of Transportation

IH 35
LOOP 20 TO UNIROYAL ROAD
SIGNING AND PAVEMENT MARKINGS
STA 180+00 TO STA 190+00

SHEET 6 OF 33

FED RD DIV NO	FEDERAL AID PROJECT NO		SHEET NO
6	NH-2002 (79)		775
STATE	STATE DIST		COUNTY
TEXAS	LAREDO		WEBB
CONT	SECT	JOB	HIGHWAY NO
0018	05	062, ETC	IH 35

REF FILE(S): j01lop01.uti, uti LV ON = 1-63
j01lop01.eop, eop LV ON = 1-17,19-63
j01lop01.bck, bck LV ON = 2,9,10,14,17,20,21,25,28
j01lop01.alg, alg LV ON = 1-6,35-39
j01lop01.bdr, bdr LV ON = 14,31,45,50,57,58,60-62
j01lop01.spm, spm LV ON = 1-63
miloint.row, row LV ON = 1-22,24-63

b22lop03.dgn-10 HOUFILE023 \hcivil\cf0130\ 6/2/2003

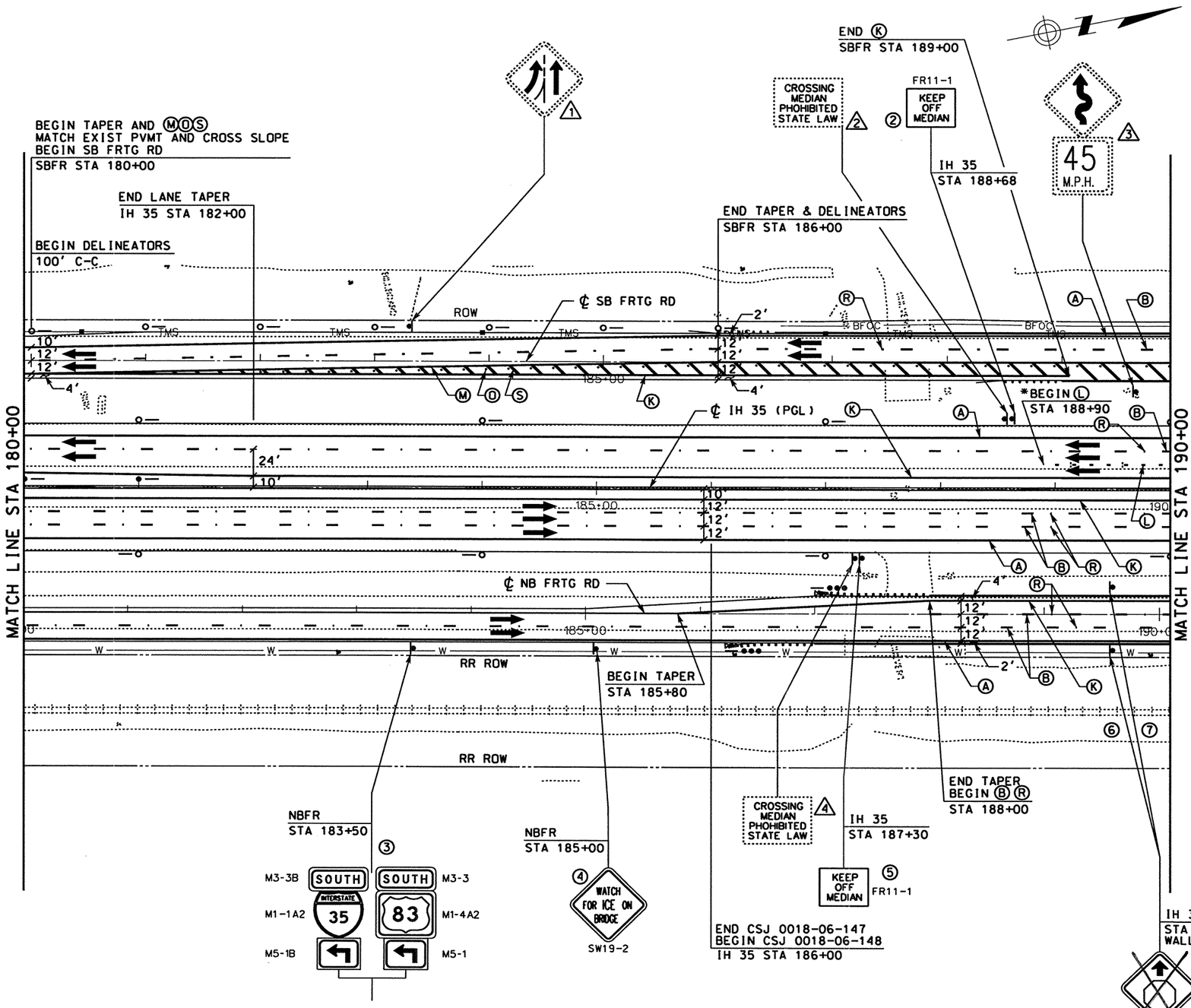

* NOTE: SEE MERGE RIGHT STANDARD FOR DETAILS.

STRIPING LEGEND

- Ⓐ REFL PAV MRK TY I & II (W)(SLD)(4")
- Ⓑ REFL PAV MRK TY I & II (W)(BRK)(4")
- Ⓒ REFL PAV MRK TY I & II (W)(SLD)(8")
- Ⓓ REFL PAV MRK TY I & II (W)(DOT)(4")
- Ⓔ REFL PAV MRK TY I & II (W)(SLD)(12")
- Ⓕ REFL PAV MRK TY I & II (W)(SLD)(24")
- Ⓛ REFL PAV MRK TY I & II (W)(LNDP)(12")
- Ⓖ REFL PAV MRK TY I & II (W)(ARROW)
- Ⓗ REFL PAV MRK TY I & II (W)(DBL ARROW)
- Ⓣ REFL PAV MRK TY I & II (W)(TND ARROW)
- Ⓘ REFL PAV MRK TY I & II (W)(WORD)
- Ⓙ REFL PAV MRK TY I & II (W)(ENT GORE)
- Ⓚ REFL PAV MRK TY I & II (Y)(SLD)(4")
- Ⓜ REFL PAV MRK TY I & II (Y)(SLD)(8")
- Ⓝ REFL PAV MRK TY I & II (Y)(SLD)(12")
- Ⓢ REFL PAV MRK TY I & II (Y)(SLD)(24")
- Ⓓ RAIS PAV MRKR CL B (REFL) TY I-A
- Ⓡ RAIS PAV MRKR CL B (REFL) TY II-C-R
- Ⓞ RAIS PAV MRKR CL B (REFL) TY II-A-A

SIGNING AND DELINEATION LEGEND

- TRAFFIC FLOW ARROWS (~~PROPOSED~~)
- TRAFFIC FLOW ARROWS (EXISTING)
- (#) SMALL SIGN TO BE INSTALLED ITEM (644)
- (E) SIGN TO REMAIN IN PLACE
- (#) SIGN TO BE REMOVED ITEM (649)
- (#) SIGN TO BE RELOCATED (ITEM 649)
- [L#] LARGE SIGN TO BE INSTALLED
- SIGN POST FOR SMALL SIGN
- DOUBLE POSTED SIGN
- SIGN POST, BACK TO BACK SMALL SIGNS
- "K" MARKER
- DELINEATOR (D-SW) (A)
- DELINEATOR (D-SY) (A)
- DELINEATOR (D-DW) (A)
- OBJECT MARKER (OM-2VP)
- OBJECT MARKER (OM-2SR)
- OBJECT MARKER (OB-3B)

0 50 100
SCALE: 1" = 100'

STATE OF TEXAS
SIDNEY S. AFONSO
PE 88055
REGISTERED PROFESSIONAL ENGINEER

THE SEAL APPEARING ON THIS DOCUMENT WAS AUTHORIZED BY SIDNEY S. AFONSO PE 88055, ON MARCH 05, 2004

KBR
Engineered by KBR Technical Services, Inc

©2003 Texas Department of Transportation

IH 35
LOOP 20 TO UNIROYAL ROAD
SIGNING AND PAVEMENT MARKINGS
STA 180+00 TO
STA 190+00

SHEET 6 OF 33

FED RD DIV NO	FEDERAL AID PROJECT NO		SHEET NO
6	NH-2002 (79)		775
STATE	STATE DIST		COUNTY
TEXAS	LAREDO		WEBB
CONT	SECT	JOB	HIGHWAY NO
0018	05	062, ETC	IH 35

DATE	BY	REV	REVISION
02/17/04	AA	1	MAINLANE SHLDR WIDEN REV EDGE OF PAVEMENT AND PAVEMENT LIMITS

REF FILE(S): j011op01.bdr, bdr LV ON = 14,31,45,50,57,58,60-62
j011op01.alg, alg LV ON = 1-6,35-39
j011op01.bck, bck LV ON = 2,9,10,14,17,20,21,25,28
j011op01.eop, eop LV ON = 1-17,19-63
j011op01.uti, uti LV ON = 1-63
j011op01.spm, spm LV ON = 1-63
milpoint.row, row LV ON = 1-22,24-63

b22lop03.dgn-10 HOUFILE023 \hchvlt\cf0130\ 3/4/2004

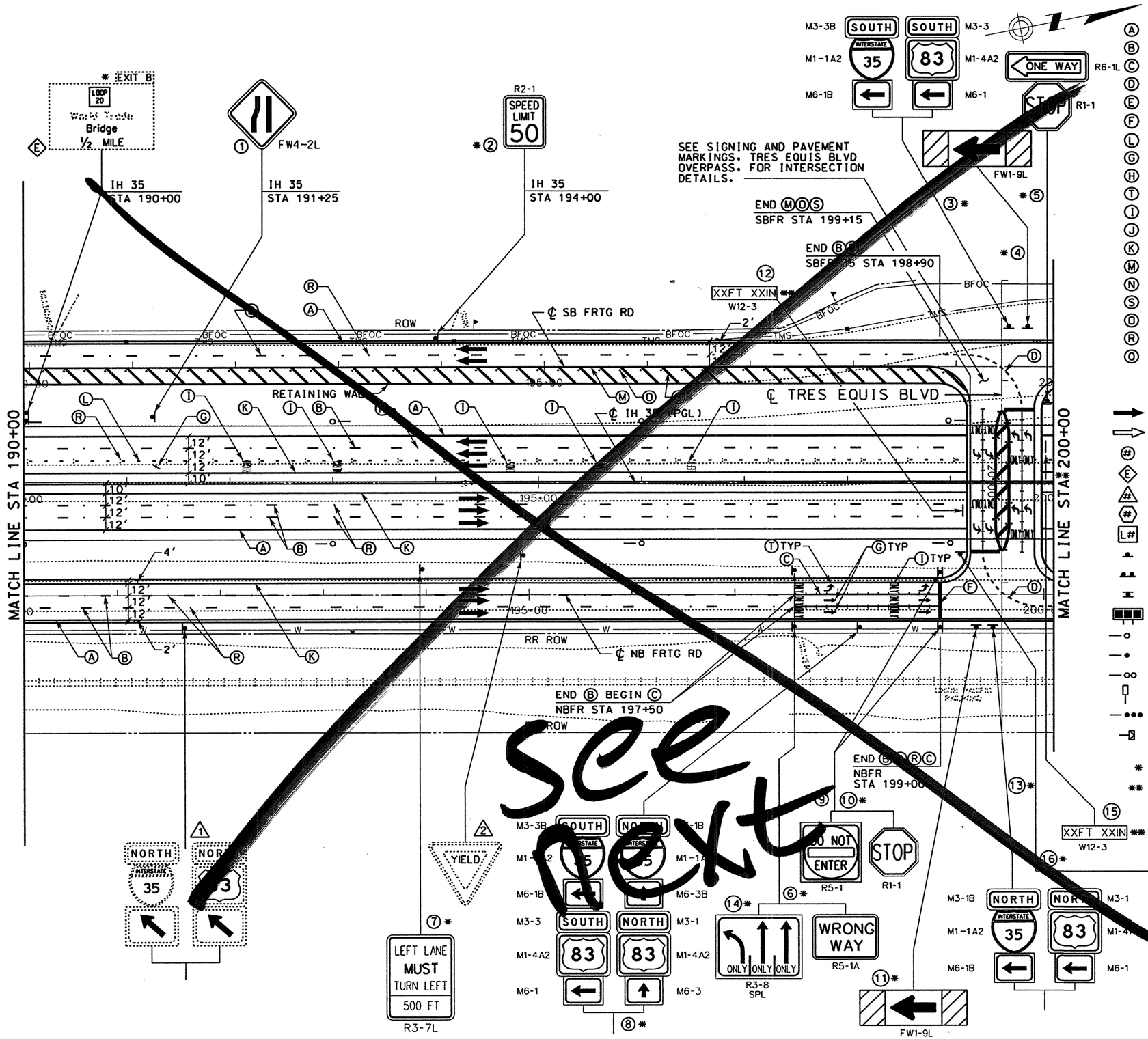

STRIPING LEGEND

- Ⓐ REFL PAV MRK TY I & II (W)(SLD)(4")
- Ⓑ REFL PAV MRK TY I & II (W)(BRK)(4")
- Ⓒ REFL PAV MRK TY I & II (W)(SLD)(8")
- Ⓓ REFL PAV MRK TY I & II (W)(DOT)(4")
- Ⓔ REFL PAV MRK TY I & II (W)(SLD)(12")
- Ⓕ REFL PAV MRK TY I & II (W)(SLD)(24")
- Ⓛ REFL PAV MRK TY I & II (W)(LNDP)(12")
- Ⓖ REFL PAV MRK TY I & II (W)(ARROW)
- Ⓗ REFL PAV MRK TY I & II (W)(DBL ARROW)
- Ⓣ REFL PAV MRK TY I & II (W)(TND ARROW)
- Ⓘ REFL PAV MRK TY I & II (W)(WORD)
- Ⓙ REFL PAV MRK TY I & II (W)(ENT GORE)
- Ⓚ REFL PAV MRK TY I & II (Y)(SLD)(4")
- Ⓜ REFL PAV MRK TY I & II (Y)(SLD)(8")
- Ⓝ REFL PAV MRK TY I & II (Y)(SLD)(12")
- Ⓢ REFL PAV MRK TY I & II (Y)(SLD)(24")
- Ⓞ RAIS PAV MRKR CL B (REFL) TY I-A
- Ⓡ RAIS PAV MRKR CL B (REFL) TY II-C-R
- Ⓠ RAIS PAV MRKR CL B (REFL) TY II-A-A

SIGNING AND DELINEATION LEGEND

- TRAFFIC FLOW ARROWS (PROPOSED)
- TRAFFIC FLOW ARROWS (EXISTING)
- # SMALL SIGN TO BE INSTALLED ITEM (644)
- Ⓔ SIGN TO REMAIN IN PLACE
- # SIGN TO BE REMOVED ITEM (649)
- # SIGN TO BE RELOCATED (ITEM 649)
- L# LARGE SIGN TO BE INSTALLED
- SIGN POST FOR SMALL SIGN
- DOUBLE POSTED SIGN
- SIGN POST. BACK TO BACK SMALL SIGNS
- "K" MARKER
- DELINEATOR (D-SW) (A)
- DELINEATOR (D-SY) (A)
- DELINEATOR (D-DW) (A)
- OBJECT MARKER (OM-2VP)
- OBJECT MARKER (OM-2SR)
- OBJECT MARKER (OB-3B)
- * BRIDGE/WALL MOUNTED
- ** CLEARANCE TO BE NOTED AFTER CONSTRUCTION OF ROADWAY AND BRIDGE. BRIDGE PROTECT ASSEMBLY

0 50 100
SCALE: 1" = 100'

STATE OF TEXAS
SIDNEY S. AFONSO
88055
REGISTERED PROFESSIONAL ENGINEER

THE SEAL APPEARING ON THIS DOCUMENT WAS AUTHORIZED BY SIDNEY S. AFONSO PE 88055, ON MAY 30, 2003

KBR
Engineered by KBR Technical Services, Inc

©2003 Texas Department of Transportation

IH 35
LOOP 20 TO UNIROYAL ROAD
SIGNING AND PAVEMENT MARKINGS
STA 190+00 TO STA 200+00

SHEET 7 OF 33

FED RD DIV NO	FEDERAL AID PROJECT NO	SHEET NO
6	NH-2002 (79)	776
STATE	STATE DIST	COUNTY
TEXAS	LAREDO	WEBB
CONT	SECT	JOB	HIGHWAY NO
0018	05	062, ETC	IH 35

6/2/2003
HOUFILE023 \hcivil\cf0130\
b22lop04.dgn-10

j01lop01.uti, uti LV ON = 1-63
j01lop01.eop, eop LV ON = 1-17,19-63
j01lop01.bck, bck LV ON = 2,9,10,14,17,20,21,25,28
j01lop01.alg, alg LV ON = 1-6,35-39
j01lop01.bdr, bdr LV ON = 14,31,45,50,57,58,60-62
j01lop01.spm, spm LV ON = 1-63
miloint.row, row LV ON = 1-22,24-63
REF FILE(S):

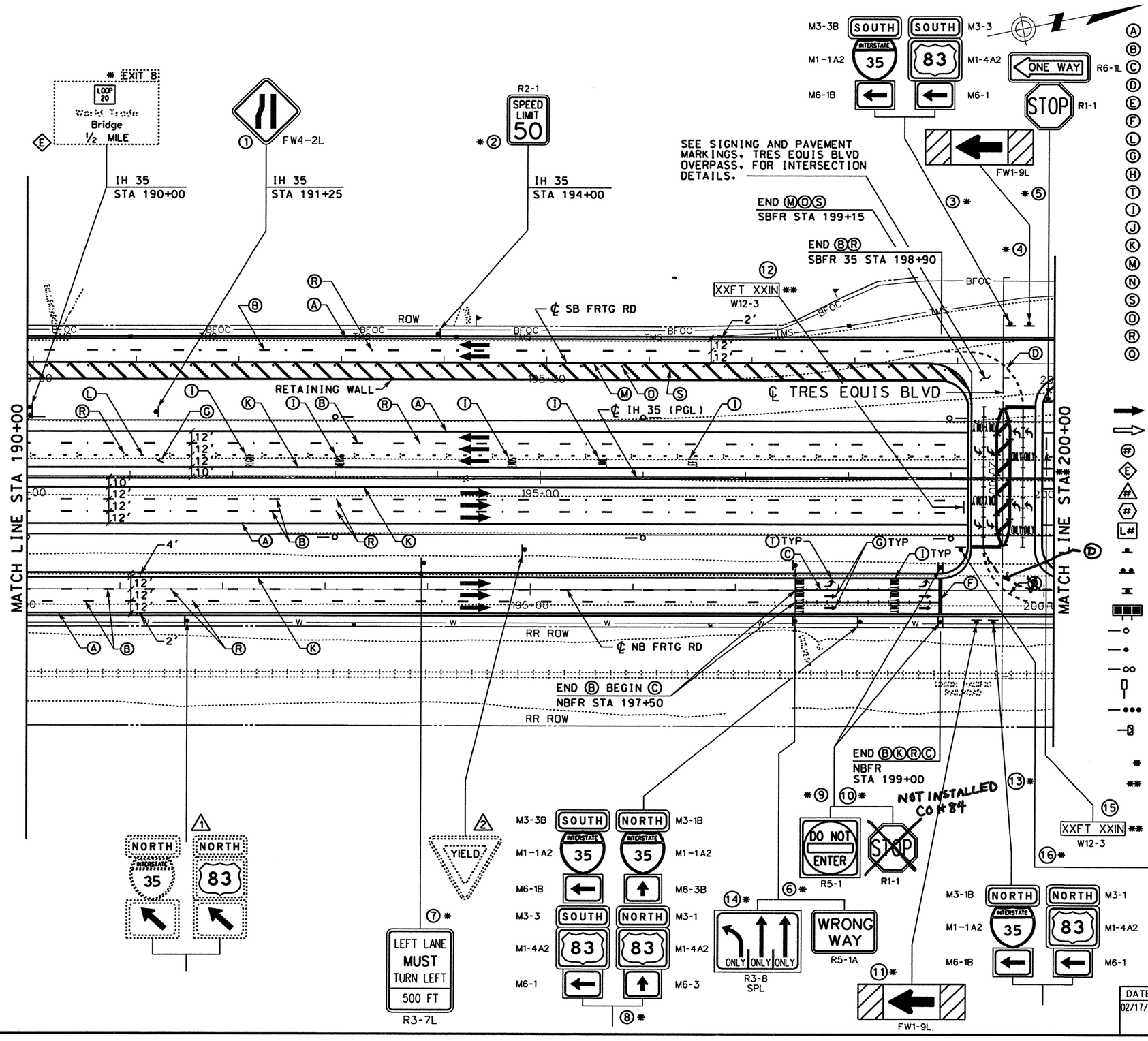

STRIPING LEGEND

- (A) REFL PAV MRK TY I & II (W)(SLD)(4")
- (B) REFL PAV MRK TY I & II (W)(BRK)(4")
- (C) REFL PAV MRK TY I & II (W)(SLD)(8")
- (D) REFL PAV MRK TY I & II (W)(DOT)(4")
- (E) REFL PAV MRK TY I & II (W)(SLD)(12")
- (F) REFL PAV MRK TY I & II (W)(SLD)(24")
- (L) REFL PAV MRK TY I & II (W)(LNDP)(12")
- (G) REFL PAV MRK TY I & II (W)(ARROW)
- (H) REFL PAV MRK TY I & II (W)(DBL ARROW)
- (T) REFL PAV MRK TY I & II (W)(TND ARROW)
- (I) REFL PAV MRK TY I & II (W)(WORD)
- (J) REFL PAV MRK TY I & II (W)(ENT GORE)
- (K) REFL PAV MRK TY I & II (Y)(SLD)(4")
- (M) REFL PAV MRK TY I & II (Y)(SLD)(8")
- (N) REFL PAV MRK TY I & II (Y)(SLD)(12")
- (S) REFL PAV MRK TY I & II (Y)(SLD)(24")
- (O) RAIS PAV MRKR CL B (REFL) TY I-A
- (R) RAIS PAV MRKR CL B (REFL) TY II-C-R
- (O) RAIS PAV MRKR CL B (REFL) TY II-A-A

SIGNING AND DELINEATION LEGEND

- TRAFFIC FLOW ARROWS (~~PROPOSED~~)
- TRAFFIC FLOW ARROWS (EXISTING)
- (#) SMALL SIGN TO BE INSTALLED ITEM (644)
- (E) SIGN TO REMAIN IN PLACE
- (#) SIGN TO BE REMOVED ITEM (649)
- (#) SIGN TO BE RELOCATED (ITEM 649)
- [L#] LARGE SIGN TO BE INSTALLED
- SIGN POST FOR SMALL SIGN
- DOUBLE POSTED SIGN
- SIGN POST. BACK TO BACK SMALL SIGNS
- "K" MARKER
- DELINEATOR (D-SW) (A)
- DELINEATOR (D-SY) (A)
- DELINEATOR (D-DW) (A)
- OBJECT MARKER (OM-2VP)
- OBJECT MARKER (OM-2SR)
- OBJECT MARKER (OB-3B)

* BRIDGE/WALL MOUNTED

** CLEARANCE ~~TO BE~~ NOTED AFTER CONSTRUCTION OF ROADWAY AND BRIDGE. BRIDGE PROTECT ASSEMBLY

0 50 100
SCALE: 1" = 100'

STATE OF TEXAS
SIDNEY S. AFONSO
88055
REGISTERED PROFESSIONAL ENGINEER

THE SEAL APPEARING ON THIS DOCUMENT WAS AUTHORIZED BY SIDNEY S. AFONSO PE 88055, ON MARCH 05, 2004

KBR
Engineered by KBR Technical Services, Inc

©2003 Texas Department of Transportation

IH 35
LOOP 20 TO UNIROYAL ROAD
SIGNING AND PAVEMENT MARKINGS
STA 190+00 TO
STA 200+00

SHEET 7 OF 33

FED RD DIV NO	FEDERAL AID PROJECT NO	SHEET NO
6	NH-2002 (79)	776
STATE	STATE DIST	COUNTY
TEXAS	LAREDO	WEBB
CONT / SECT / JOB		HIGHWAY NO
0018 / 05 / 062, ETC		IH 35

DATE	BY	REV	REVISION
02/17/04	AA	1	MAINLANE SHLDR WIDEN REV EDGE OF PAVEMENT AND PAVEMENT LIMITS

REF FILE(S): j0110p01.utl, utl LV ON = 1-63
j0110p01.eop, eop LV ON = 1-17,19-63
j0110p01.bck, bck LV ON = 2,9,10,14,17,20,21,25,28
j0110p01.alg, alg LV ON = 1-6,35-39
j0110p01.bdr, bdr LV ON = 14,31,45,50,57,58,60-62
j0110p01.spm, spm LV ON = 1-63
miloint.row, row LV ON = 1-22,24-63

b22lop04.dgn-10 HOUFILE023 \hcivil\cf0130\ 3/4/2004

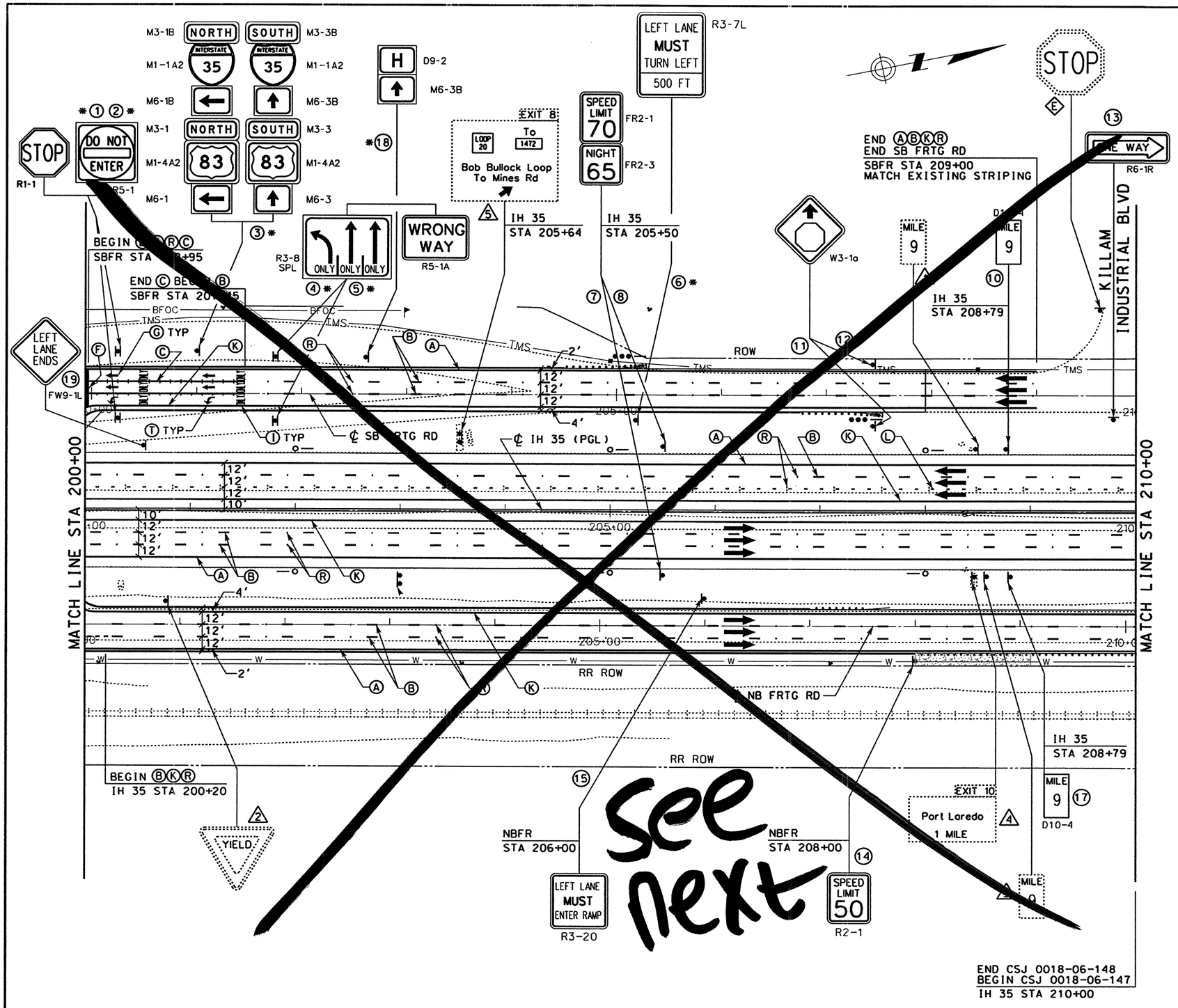

STRIPING LEGEND

- Ⓐ REFL PAV MRK TY I & II (W)(SLD)(4")
- Ⓑ REFL PAV MRK TY I & II (W)(BRK)(4")
- Ⓒ REFL PAV MRK TY I & II (W)(SLD)(8")
- Ⓓ REFL PAV MRK TY I & II (W)(DOT)(4")
- Ⓔ REFL PAV MRK TY I & II (W)(SLD)(12")
- Ⓕ REFL PAV MRK TY I & II (W)(SLD)(24")
- Ⓛ REFL PAV MRK TY I & II (W)(LNDP)(12")
- Ⓖ REFL PAV MRK TY I & II (W)(ARROW)
- Ⓗ REFL PAV MRK TY I & II (W)(DBL ARROW)
- Ⓣ REFL PAV MRK TY I & II (W)(TND ARROW)
- Ⓘ REFL PAV MRK TY I & II (W)(WORD)
- Ⓙ REFL PAV MRK TY I & II (W)(ENT GORE)
- Ⓚ REFL PAV MRK TY I & II (Y)(SLD)(4")
- Ⓜ REFL PAV MRK TY I & II (Y)(SLD)(8")
- Ⓝ REFL PAV MRK TY I & II (Y)(SLD)(12")
- Ⓢ REFL PAV MRK TY I & II (Y)(SLD)(24")
- Ⓓ RAIS PAV MRKR CL B (REFL) TY I-A
- Ⓡ RAIS PAV MRKR CL B (REFL) TY II-C-R
- Ⓞ RAIS PAV MRKR CL B (REFL) TY II-A-A

SIGNING AND DELINEATION LEGEND

- TRAFFIC FLOW ARROWS (PROPOSED)
- TRAFFIC FLOW ARROWS (EXISTING)
- (#) SMALL SIGN TO BE INSTALLED ITEM (644)
- (E) SIGN TO REMAIN IN PLACE
- (#) SIGN TO BE REMOVED ITEM (649)
- (#) SIGN TO BE RELOCATED (ITEM 649)
- [L#] LARGE SIGN TO BE INSTALLED
- SIGN POST FOR SMALL SIGN
- DOUBLE POSTED SIGN
- SIGN POST, BACK TO BACK SMALL SIGNS
- "K" MARKER
- DELINEATOR (D-SW) (A)
- DELINEATOR (D-SY) (A)
- DELINEATOR (D-DW) (A)
- OBJECT MARKER (OM-2VP)
- OBJECT MARKER (OM-2SR)
- OBJECT MARKER (OB-3B)
- * BRIDGE/WALL MOUNTED

0 50 100
SCALE: 1" = 100'

STATE OF TEXAS
SIDNEY S. AFONSO
PE 88055
REGISTERED PROFESSIONAL ENGINEER

THE SEAL APPEARING ON THIS DOCUMENT WAS AUTHORIZED BY SIDNEY S. AFONSO PE 88055, ON MAY 30, 2003

Sidney S. Afonso

KBR
Engineered by KBR Technical Services, Inc

©2003 Texas Department of Transportation

IH 35
LOOP 20 TO UNIROYAL ROAD
SIGNING AND PAVEMENT MARKINGS
STA 200+00 TO STA 210+00

SHEET 8 OF 33

FED RD DIV NO	FEDERAL AID PROJECT NO	SHEET NO
6	NH-2002 (79)	777
STATE	STATE DIST	COUNTY
TEXAS	LAREDO	WEBB
CONT	SECT / JOB	HIGHWAY NO
0018	05 / 062, ETC	IH 35

6/2/2003

HOUFILE023 \hcivil\cf0130\

b22lop05.dgn-10

REF FILE(S): j011op01.bdr, bdr j011op01.alg, alg j011op01.back, back j011op01.eop, eop j011op01.uti, uti
LV ON = 14.31.45.50.57.58.60-62 LV ON = 1-6,35-39 LV ON = 1-2,9,10,14,17,20,21,25,28 LV ON = 1-17,19-63 LV ON = 1-63
j011op01.spm, spm j011op01.row, row
LV ON = 1-22,24-63 LV ON = 1-63

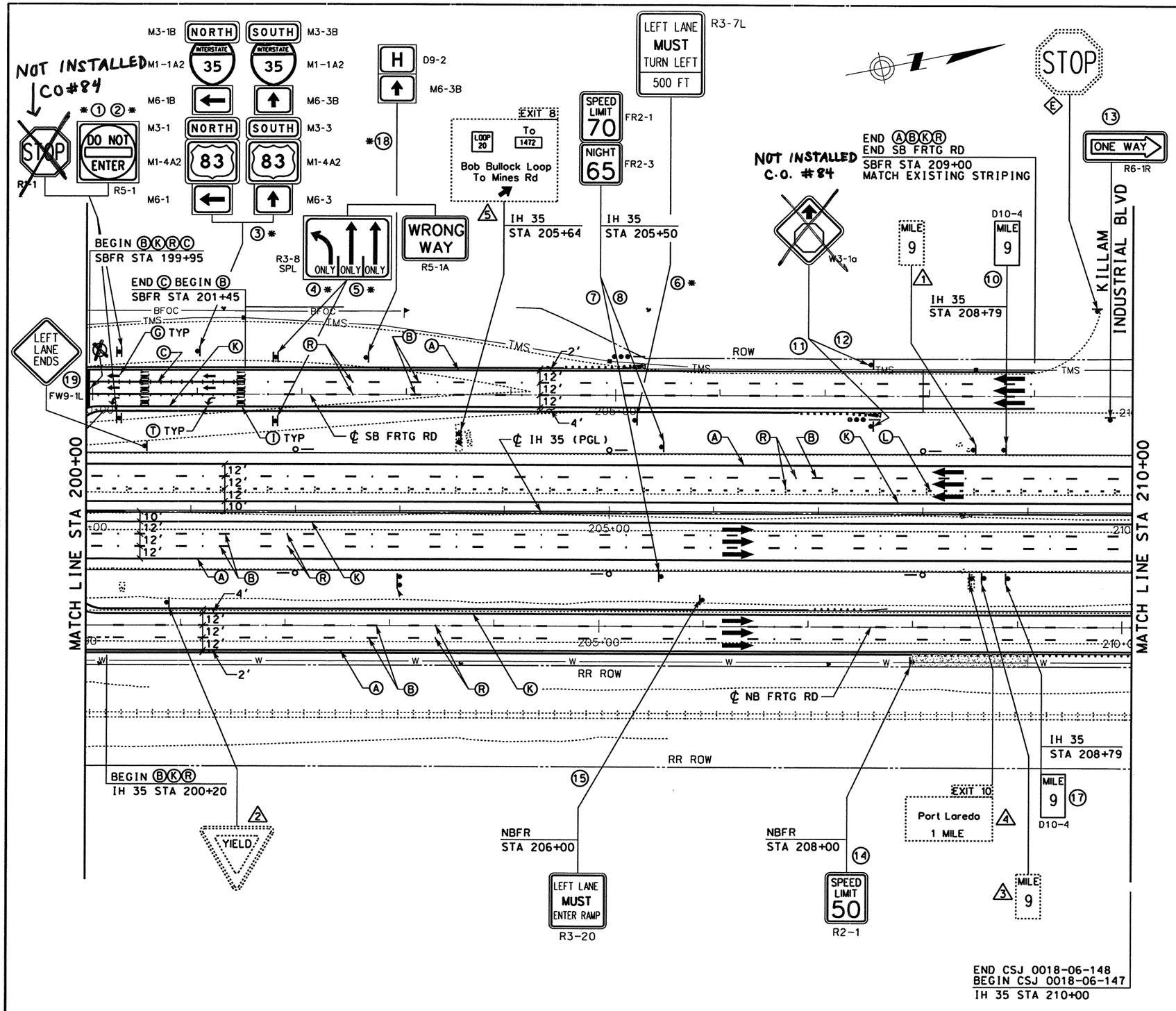

STRIPING LEGEND

- Ⓐ REFL PAV MRK TY I & II (W)(SLD)(4")
- Ⓑ REFL PAV MRK TY I & II (W)(BRK)(4")
- Ⓒ REFL PAV MRK TY I & II (W)(SLD)(8")
- Ⓓ REFL PAV MRK TY I & II (W)(DOT)(4")
- Ⓔ REFL PAV MRK TY I & II (W)(SLD)(12")
- Ⓕ REFL PAV MRK TY I & II (W)(SLD)(24")
- Ⓛ REFL PAV MRK TY I & II (W)(LNDP)(12")
- Ⓖ REFL PAV MRK TY I & II (W)(ARROW)
- Ⓗ REFL PAV MRK TY I & II (W)(DBL ARROW)
- Ⓣ REFL PAV MRK TY I & II (W)(TND ARROW)
- Ⓘ REFL PAV MRK TY I & II (W)(WORD)
- Ⓙ REFL PAV MRK TY I & II (W)(ENT GORE)
- Ⓚ REFL PAV MRK TY I & II (Y)(SLD)(4")
- Ⓜ REFL PAV MRK TY I & II (Y)(SLD)(8")
- Ⓝ REFL PAV MRK TY I & II (Y)(SLD)(12")
- Ⓢ REFL PAV MRK TY I & II (Y)(SLD)(24")
- Ⓓ RAIS PAV MRKR CL B (REFL) TY I-A
- Ⓡ RAIS PAV MRKR CL B (REFL) TY II-C-R
- Ⓞ RAIS PAV MRKR CL B (REFL) TY II-A-A

SIGNING AND DELINEATION LEGEND

- TRAFFIC FLOW ARROWS (~~PROPOSED~~)
- TRAFFIC FLOW ARROWS (EXISTING)
- (#) SMALL SIGN TO BE INSTALLED ITEM (644)
- (E) SIGN TO REMAIN IN PLACE
- (#) SIGN TO BE REMOVED ITEM (649)
- (#) SIGN TO BE RELOCATED (ITEM 649)
- [L#] LARGE SIGN TO BE INSTALLED
- SIGN POST FOR SMALL SIGN
- DOUBLE POSTED SIGN
- SIGN POST, BACK TO BACK SMALL SIGNS
- "K" MARKER
- DELINEATOR (D-SW) (A)
- DELINEATOR (D-SY) (A)
- DELINEATOR (D-DW) (A)
- OBJECT MARKER (OM-2VP)
- OBJECT MARKER (OM-2SR)
- OBJECT MARKER (OB-3B)

* BRIDGE/WALL MOUNTED

0 50 100
SCALE: 1" = 100'

STATE OF TEXAS
SIDNEY S. AFONSO
88055
REGISTERED PROFESSIONAL ENGINEER

THE SEAL APPEARING ON THIS DOCUMENT WAS AUTHORIZED BY SIDNEY S. AFONSO PE 88055, ON MARCH 05, 2004

KBR
Engineered by KBR Technical Services, Inc

©2003 Texas Department of Transportation

IH 35
LOOP 20 TO UNIROYAL ROAD
SIGNING AND PAVEMENT MARKINGS
STA 200+00 TO
STA 210+00

SHEET 8 OF 33

FED RD DIV NO	FEDERAL AID PROJECT NO	SHEET NO
6	NH-2002 (79)	777
STATE	STATE DIST	COUNTY
TEXAS	LAREDO	WEBB
CONT / SECT / JOB		HIGHWAY NO
0018 / 05 / 062, ETC		IH 35

DATE	BY	REV	REVISION
02/17/04	AA	1	MAINLANE SHLDR WIDEN REV EDGE OF PAVEMENT AND PAVEMENT LIMITS

REF FILE(S): j0110p01.uti, uti LV ON = 1-63
j0110p01.eop, eop LV ON = 1-17,19-63
j0110p01.bck, bck LV ON = 2-9,10,14,17,20,21,25,28
j0110p01.alg, alg LV ON = 1-6,35-39
j0110p01.bdr, bdr LV ON = 14,31,45,50,57,58,60-62
j0110p01.spm, spm LV ON = 1-63
j0110p01.row, row LV ON = 1-22,24-63
milointr.row, row

3/4/2004
HOUFILE023 \hcivil\cf0130\
b22lop05.dgn-10

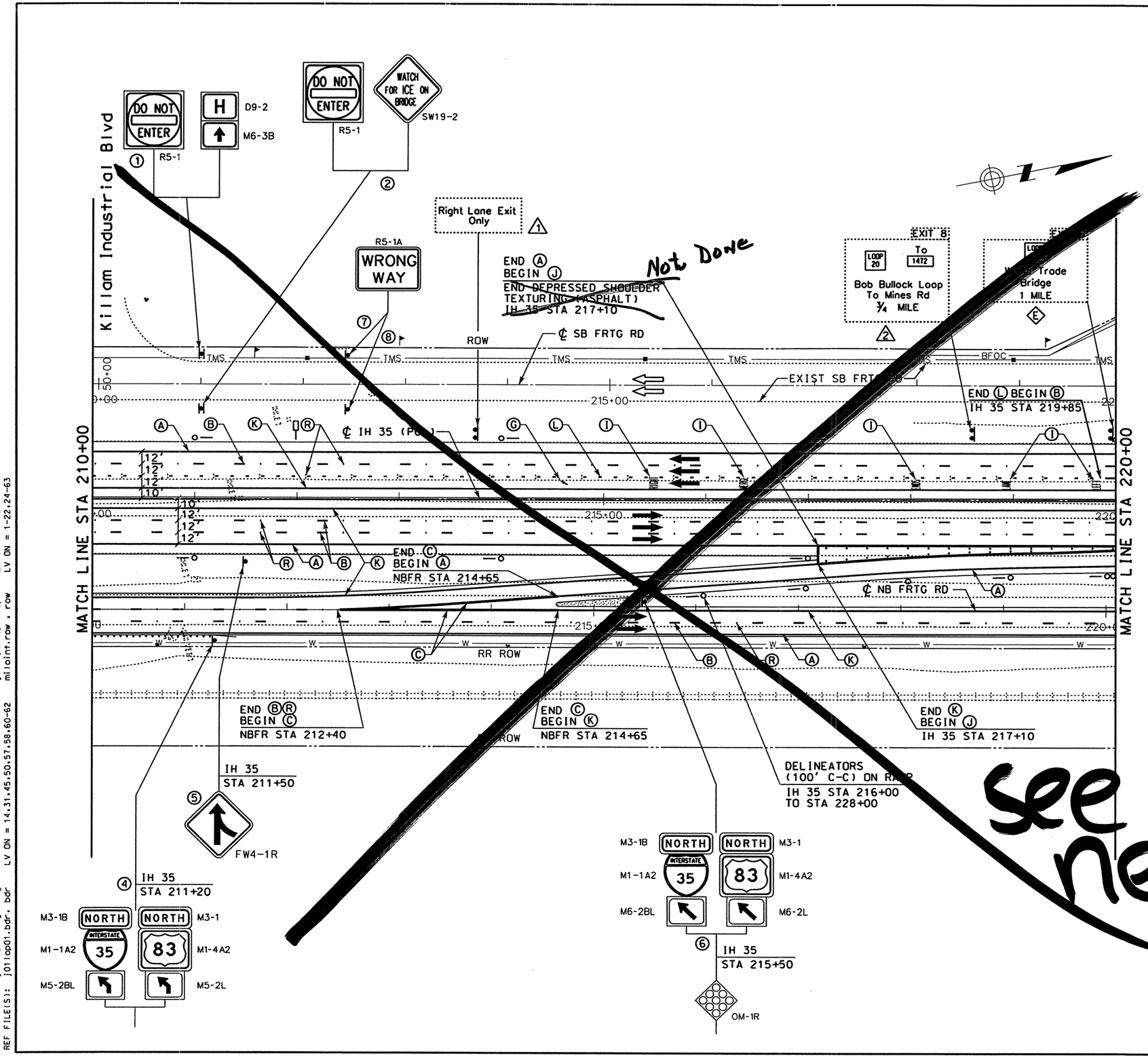

STRIPING LEGEND

- Ⓐ REFL PAV MRK TY I & II (W)(SLD)(4")
- Ⓑ REFL PAV MRK TY I & II (W)(BRK)(4")
- Ⓒ REFL PAV MRK TY I & II (W)(SLD)(8")
- Ⓓ REFL PAV MRK TY I & II (W)(DOT)(4")
- Ⓔ REFL PAV MRK TY I & II (W)(SLD)(12")
- Ⓕ REFL PAV MRK TY I & II (W)(SLD)(24")
- Ⓛ REFL PAV MRK TY I & II (W)(LNDP)(12")
- Ⓖ REFL PAV MRK TY I & II (W)(ARROW)
- Ⓗ REFL PAV MRK TY I & II (W)(DBL ARROW)
- Ⓣ REFL PAV MRK TY I & II (W)(TND ARROW)
- Ⓘ REFL PAV MRK TY I & II (W)(WORD)
- Ⓙ REFL PAV MRK TY I & II (W)(ENT GORE)
- Ⓚ REFL PAV MRK TY I & II (Y)(SLD)(4")
- Ⓜ REFL PAV MRK TY I & II (Y)(SLD)(8")
- Ⓝ REFL PAV MRK TY I & II (Y)(SLD)(12")
- Ⓢ REFL PAV MRK TY I & II (Y)(SLD)(24")
- Ⓓ RAIS PAV MRKR CL B (REFL) TY I-A
- Ⓡ RAIS PAV MRKR CL B (REFL) TY II-C-R
- Ⓞ RAIS PAV MRKR CL B (REFL) TY II-A-A

SIGNING AND DELINEATION LEGEND

- TRAFFIC FLOW ARROWS (PROPOSED)
- TRAFFIC FLOW ARROWS (EXISTING)
- (#) SMALL SIGN TO BE INSTALLED ITEM (644)
- (E) SIGN TO REMAIN IN PLACE
- (#) SIGN TO BE REMOVED ITEM (649)
- (#) SIGN TO BE RELOCATED (ITEM 649)
- [L#] LARGE SIGN TO BE INSTALLED
- SIGN POST FOR SMALL SIGN
- DOUBLE POSTED SIGN
- SIGN POST. BACK TO BACK SMALL SIGNS
- "K" MARKER
- DELINEATOR (D-SW) (A)
- DELINEATOR (D-SY) (A)
- DELINEATOR (D-DW) (A)
- OBJECT MARKER (OM-2VP)
- OBJECT MARKER (OM-2SR)
- OBJECT MARKER (OB-3B)

0 50 100
SCALE: 1" = 100'

STATE OF TEXAS
SIDNEY S. AFONSO
PE 88055
REGISTERED PROFESSIONAL ENGINEER

THE SEAL APPEARING ON THIS DOCUMENT WAS AUTHORIZED BY SIDNEY S. AFONSO PE 88055, ON MAY 30, 2006

KBR
Engineered by KBR Technical Services, Inc

©2003 Texas Department of Transportation

IH 35
LOOP 20 TO UNIROYAL ROAD
SIGNING AND PAVEMENT MARKINGS
STA 210+00 TO
STA 220+00

SHEET 9 OF 33

FED RD DIV NO	FEDERAL AID PROJECT NO		SHEET NO
6	NH-2002 (79)		778
STATE	STATE DIST		COUNTY
TEXAS	LAREDO		WEBB
CONT	SECT	JOB	HIGHWAY NO
0018	05	062, ETC	IH 35

6/2/2003
HOUFILE023 \hchvl\cf0130\
b22lop06.dgn-16

REF FILE(S): j011op01.uti. uti LV ON = 1-63
j011op01.eop. eop LV ON = 1-17,19-63
j011op01.bck. bck LV ON = 2,9,10,14,17,20,21,25,28
j011op01.alg. alg LV ON = 1-6,35-39
j011op01.bdr. bdr LV ON = 14,31,45,50,57,58,60-62
j011op01.som. som LV ON = 1-63
mlloint.row. row LV ON = 1-22,24-63

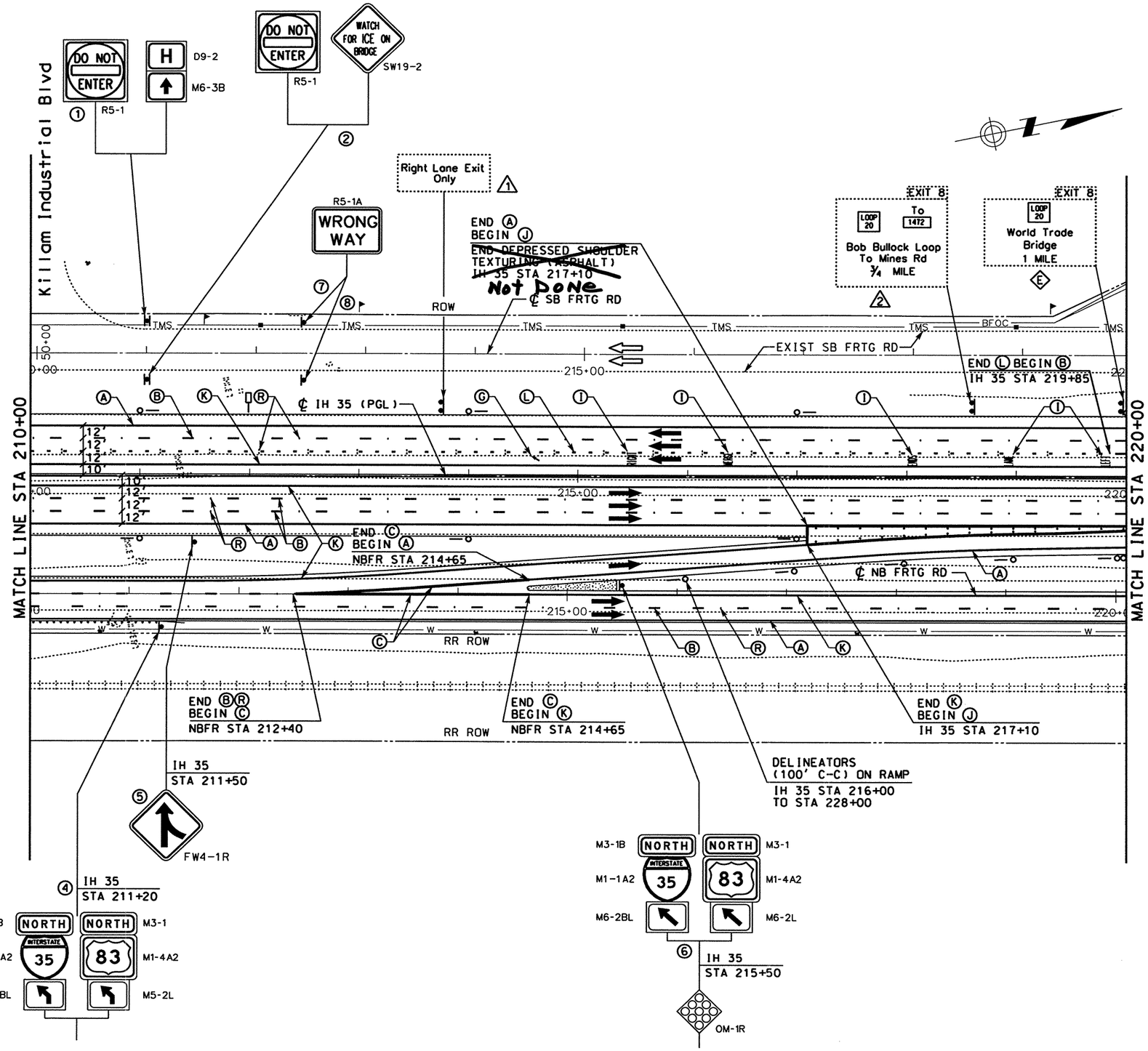

STRIPING LEGEND

- Ⓐ REFL PAV MRK TY I & II (W)(SLD)(4")
- Ⓑ REFL PAV MRK TY I & II (W)(BRK)(4")
- Ⓒ REFL PAV MRK TY I & II (W)(SLD)(8")
- Ⓓ REFL PAV MRK TY I & II (W)(DOT)(4")
- Ⓔ REFL PAV MRK TY I & II (W)(SLD)(12")
- Ⓕ REFL PAV MRK TY I & II (W)(SLD)(24")
- Ⓛ REFL PAV MRK TY I & II (W)(LNDP)(12")
- Ⓖ REFL PAV MRK TY I & II (W)(ARROW)
- Ⓗ REFL PAV MRK TY I & II (W)(DBL ARROW)
- Ⓣ REFL PAV MRK TY I & II (W)(TND ARROW)
- Ⓘ REFL PAV MRK TY I & II (W)(WORD)
- Ⓙ REFL PAV MRK TY I & II (W)(ENT GORE)
- Ⓚ REFL PAV MRK TY I & II (Y)(SLD)(4")
- Ⓜ REFL PAV MRK TY I & II (Y)(SLD)(8")
- Ⓝ REFL PAV MRK TY I & II (Y)(SLD)(12")
- Ⓢ REFL PAV MRK TY I & II (Y)(SLD)(24")
- Ⓓ RAIS PAV MRKR CL B (REFL) TY I-A
- Ⓡ RAIS PAV MRKR CL B (REFL) TY II-C-R
- Ⓞ RAIS PAV MRKR CL B (REFL) TY II-A-A

SIGNING AND DELINEATION LEGEND

- TRAFFIC FLOW ARROWS (~~PROPOSED~~)
- TRAFFIC FLOW ARROWS (EXISTING)
- # SMALL SIGN TO BE INSTALLED ITEM (644)
- Ⓔ SIGN TO REMAIN IN PLACE
- # SIGN TO BE REMOVED ITEM (649)
- # SIGN TO BE RELOCATED (ITEM 649)
- L# LARGE SIGN TO BE INSTALLED
- SIGN POST FOR SMALL SIGN
- DOUBLE POSTED SIGN
- SIGN POST, BACK TO BACK SMALL SIGNS
- "K" MARKER
- DELINEATOR (D-SW) (A)
- DELINEATOR (D-SY) (A)
- DELINEATOR (D-DW) (A)
- OBJECT MARKER (OM-2VP)
- OBJECT MARKER (OM-2SR)
- OBJECT MARKER (OB-3B)

0 50 100
SCALE: 1" = 100'

STATE OF TEXAS
SIDNEY S. AFONSO
PE 88055
REGISTERED PROFESSIONAL ENGINEER

THE SEAL APPEARING ON THIS DOCUMENT WAS AUTHORIZED BY SIDNEY S. AFONSO PE 88055, ON MARCH 05, 2004

3/4/2004

KBR
Engineered by KBR Technical Services, Inc

©2003 Texas Department of Transportation

IH 35
LOOP 20 TO UNIROYAL ROAD
SIGNING AND PAVEMENT MARKINGS
STA 210+00 TO STA 220+00

SHEET 9 OF 33

FED RD DIV NO	FEDERAL AID PROJECT NO	SHEET NO
6	NH-2002 (79)	778

STATE	STATE DIST	COUNTY
TEXAS	LAREDO	WEBB

CONT	SECT	JOB	HIGHWAY NO
0018	05	062, ETC	IH 35

DATE	BY	REV	REVISION
02/17/04	AA	1	MAINLANE SHLDR WIDEN REV EDGE OF PAVEMENT AND PAVEMENT LIMITS

REF FILE(S): j01lop01.uti, uti LV ON = 1-63
j01lop01.eop, eop LV ON = 1-17,19-63
j01lop01.bck, bck LV ON = 2,9,10,14,17,20,21,25,28
j01lop01.alg, alg LV ON = 1-6,35-39
j01lop01.bdr, bdr LV ON = 14,31,45,50,57,58,60-62
j01lop01.spm, spm LV ON = 1-63
milointr.row , row LV ON = 1-22,24-63

b22lop06.dgn-16 HOUFILE023 \hcivil\cf0130\

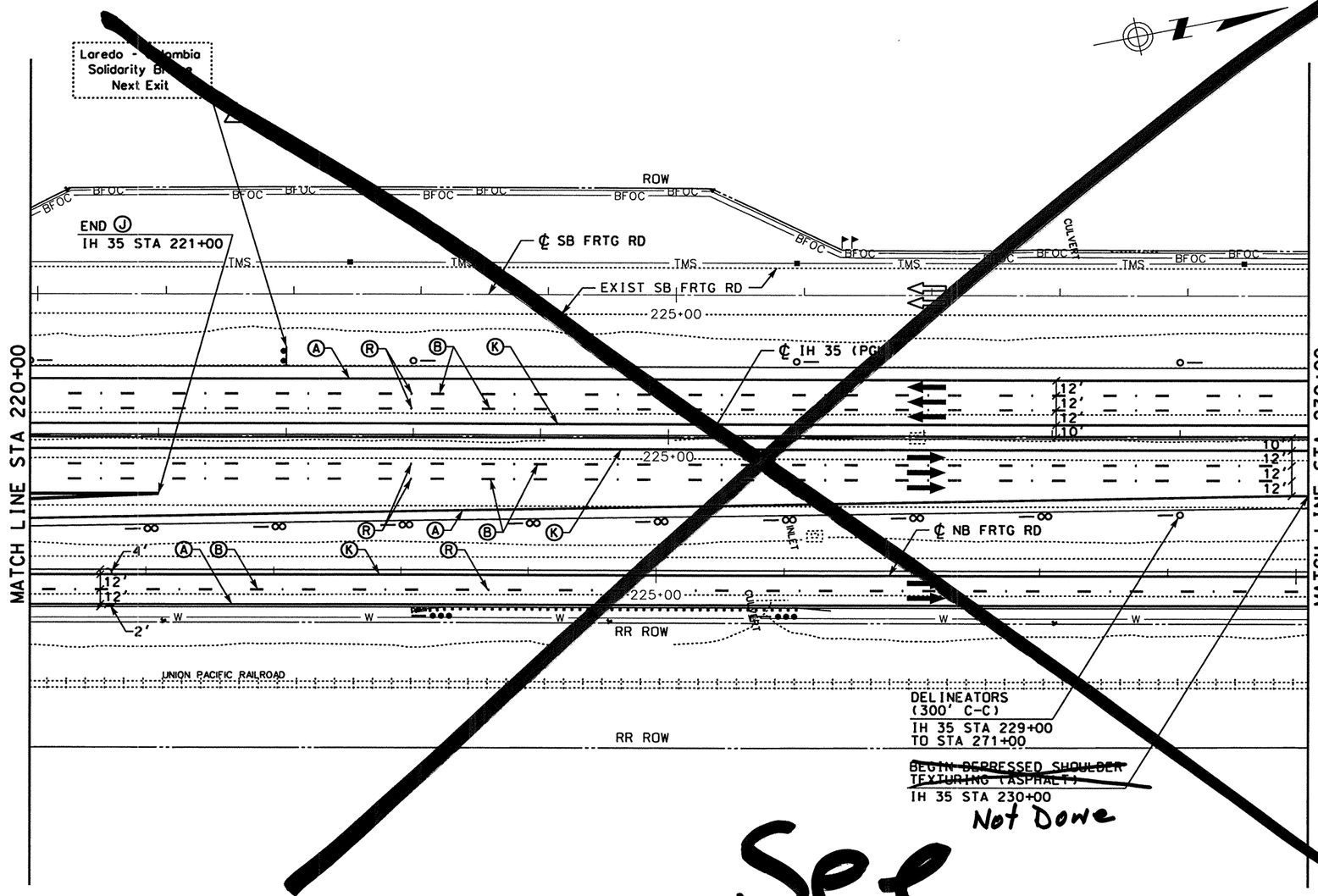

See next

STRIPING LEGEND

- Ⓐ REFL PAV MRK TY I & II (W)(SLD)(4")
- Ⓑ REFL PAV MRK TY I & II (W)(BRK)(4")
- Ⓒ REFL PAV MRK TY I & II (W)(SLD)(8")
- Ⓓ REFL PAV MRK TY I & II (W)(DOT)(4")
- Ⓔ REFL PAV MRK TY I & II (W)(SLD)(12")
- Ⓕ REFL PAV MRK TY I & II (W)(SLD)(24")
- Ⓛ REFL PAV MRK TY I & II (W)(LNDP)(12")
- Ⓖ REFL PAV MRK TY I & II (W)(ARROW)
- Ⓗ REFL PAV MRK TY I & II (W)(DBL ARROW)
- Ⓣ REFL PAV MRK TY I & II (W)(TND ARROW)
- Ⓘ REFL PAV MRK TY I & II (W)(WORD)
- Ⓙ REFL PAV MRK TY I & II (W)(ENT GORE)
- Ⓚ REFL PAV MRK TY I & II (Y)(SLD)(4")
- Ⓜ REFL PAV MRK TY I & II (Y)(SLD)(8")
- Ⓝ REFL PAV MRK TY I & II (Y)(SLD)(12")
- Ⓢ REFL PAV MRK TY I & II (Y)(SLD)(24")
- Ⓓ RAIS PAV MRKR CL B (REFL) TY I-A
- Ⓡ RAIS PAV MRKR CL B (REFL) TY II-C-R
- Ⓞ RAIS PAV MRKR CL B (REFL) TY II-A-A

SIGNING AND DELINEATION LEGEND

- TRAFFIC FLOW ARROWS (PROPOSED)
- TRAFFIC FLOW ARROWS (EXISTING)
- (#) SMALL SIGN TO BE INSTALLED ITEM (644)
- (E) SIGN TO REMAIN IN PLACE
- (#) SIGN TO BE REMOVED ITEM (649)
- (#) SIGN TO BE RELOCATED (ITEM 649)
- [L#] LARGE SIGN TO BE INSTALLED
- SIGN POST FOR SMALL SIGN
- DOUBLE POSTED SIGN
- SIGN POST, BACK TO BACK SMALL SIGNS
- "K" MARKER
- DELINEATOR (D-SW) (A)
- DELINEATOR (D-SY) (A)
- DELINEATOR (D-DW) (A)
- OBJECT MARKER (OM-2VP)
- OBJECT MARKER (OM-2SR)
- OBJECT MARKER (OB-3B)

0 50 100
SCALE: 1" = 100'

STATE OF TEXAS
SIDNEY S. AFONSO
88055
REGISTERED PROFESSIONAL ENGINEER

THE SEAL APPEARING ON THIS DOCUMENT WAS AUTHORIZED BY SIDNEY S. AFONSO PE 88055, ON MAY 07, 2003

KBR
Engineered by KBR Technical Services, Inc

©2003 Texas Department of Transportation

IH 35
LOOP 20 TO UNIROYAL ROAD
SIGNING AND PAVEMENT MARKINGS
STA 220+00 TO
STA 230+00

SHEET 10 OF 33

FED RD DIV NO	FEDERAL AID PROJECT NO		SHEET NO
6	NH-2002 (79)		779
STATE	STATE DIST		COUNTY
TEXAS	LAREDO		WEBB
CONT	SECT	JOB	HIGHWAY NO
0018	05	062, ETC	IH 35

5/8/2003
HOUFILE023 \hciv1\c0130\
b22lop07.dgn-07

REF FILE(S): j01lop01.bdr, bdr LV ON = 14,31,45,50,57,58,60-62
j01lop01.alg, alg LV ON = 1-6,35-39
j01lop01.bck, bck LV ON = 2,9,10,14,17,20,21,25,28
j01lop01.eop, eop LV ON = 1-17,19-63
j01lop01.uti, uti LV ON = 1-63
j01lop01.spm, spm LV ON = 1-63
mi1oint.row, row LV ON = 1-22,24-63

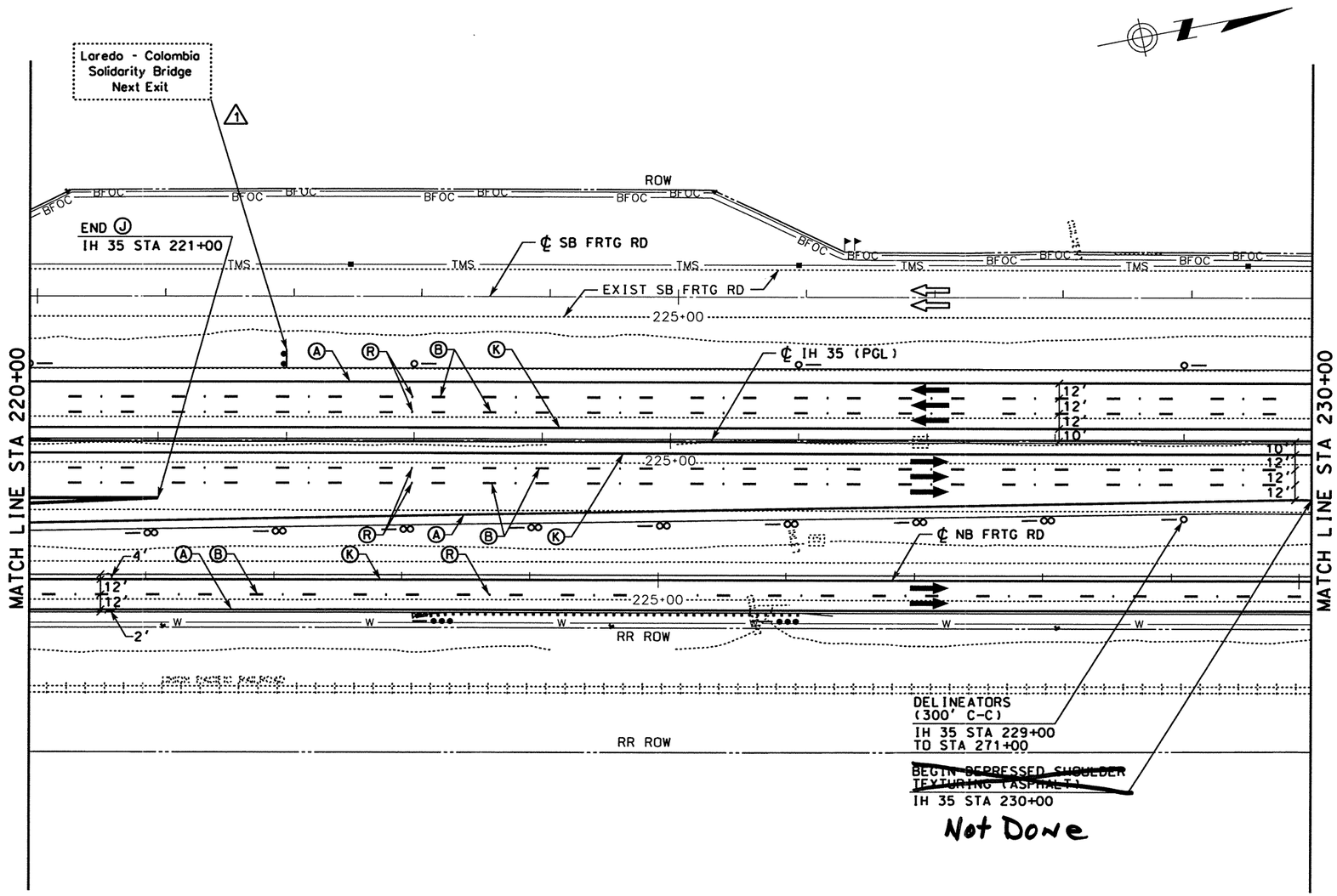

STRIPING LEGEND

- Ⓐ REFL PAV MRK TY I & II (W)(SLD)(4")
- Ⓑ REFL PAV MRK TY I & II (W)(BRK)(4")
- Ⓒ REFL PAV MRK TY I & II (W)(SLD)(8")
- Ⓓ REFL PAV MRK TY I & II (W)(DOT)(4")
- Ⓔ REFL PAV MRK TY I & II (W)(SLD)(12")
- Ⓕ REFL PAV MRK TY I & II (W)(SLD)(24")
- Ⓛ REFL PAV MRK TY I & II (W)(LNDP)(12")
- Ⓖ REFL PAV MRK TY I & II (W)(ARROW)
- Ⓗ REFL PAV MRK TY I & II (W)(DBL ARROW)
- Ⓣ REFL PAV MRK TY I & II (W)(TND ARROW)
- Ⓘ REFL PAV MRK TY I & II (W)(WORD)
- Ⓙ REFL PAV MRK TY I & II (W)(ENT GORE)
- Ⓚ REFL PAV MRK TY I & II (Y)(SLD)(4")
- Ⓜ REFL PAV MRK TY I & II (Y)(SLD)(8")
- Ⓝ REFL PAV MRK TY I & II (Y)(SLD)(12")
- Ⓢ REFL PAV MRK TY I & II (Y)(SLD)(24")
- Ⓓ RAIS PAV MRKR CL B (REFL) TY I-A
- Ⓡ RAIS PAV MRKR CL B (REFL) TY II-C-R
- Ⓞ RAIS PAV MRKR CL B (REFL) TY II-A-A

SIGNING AND DELINEATION LEGEND

- TRAFFIC FLOW ARROWS ~~(PROPOSED)~~
- TRAFFIC FLOW ARROWS (EXISTING)
- (#) SMALL SIGN TO BE INSTALLED ITEM (644)
- (E) SIGN TO REMAIN IN PLACE
- (#) SIGN TO BE REMOVED ITEM (649)
- (#) SIGN TO BE RELOCATED (ITEM 649)
- [L#] LARGE SIGN TO BE INSTALLED
- SIGN POST FOR SMALL SIGN
- DOUBLE POSTED SIGN
- SIGN POST, BACK TO BACK SMALL SIGNS
- "K" MARKER
- DELINEATOR (D-SW) (A)
- DELINEATOR (D-SY) (A)
- DELINEATOR (D-DW) (A)
- OBJECT MARKER (OM-2VP)
- OBJECT MARKER (OM-2SR)
- OBJECT MARKER (OB-3B)

0 50 100
SCALE: 1" = 100'

STATE OF TEXAS
SIDNEY S. AFONSO
88055
REGISTERED PROFESSIONAL ENGINEER

THE SEAL APPEARING ON THIS DOCUMENT WAS AUTHORIZED BY SIDNEY S. AFONSO PE 88055, ON MARCH 05, 2004

KBR
Engineered by KBR Technical Services, Inc

©2003 Texas Department of Transportation

IH 35
LOOP 20 TO UNIROYAL ROAD
SIGNING AND PAVEMENT MARKINGS
STA 220+00 TO
STA 230+00

SHEET 10 OF 33

FED RD DIV NO	FEDERAL AID PROJECT NO	SHEET NO
6	NH-2002 (79)	779
STATE	STATE DIST	COUNTY
TEXAS	LAREDO	WEBB
CONT / SECT / JOB		HIGHWAY NO
0018 / 05 / 062, ETC		IH 35

DATE	BY	REV	REVISION
02/17/04	AA	1	MAINLANE SHLDR WIDEN REV EDGE OF PAVEMENT AND PAVEMENT LIMITS

REF FILE(S): j01lop01.utl, utl LV ON = 1-63
j01lop01.eop, eop LV ON = 1-17,19-63
j01lop01.bck, bck LV ON = 2-9,10,14,17,20,21,25,28
j01lop01.alg, alg LV ON = 1-6,35-39
j01lop01.bdr, bdr LV ON = 14,31,45,50,57,58,60-62
j01lop01.spm, spm LV ON = 1-63
milpoint.row, row LV ON = 1-22,24-63

b22lop07.dgn-07 HOUFILE023 \hcivil\cf0130\ 3/4/2004

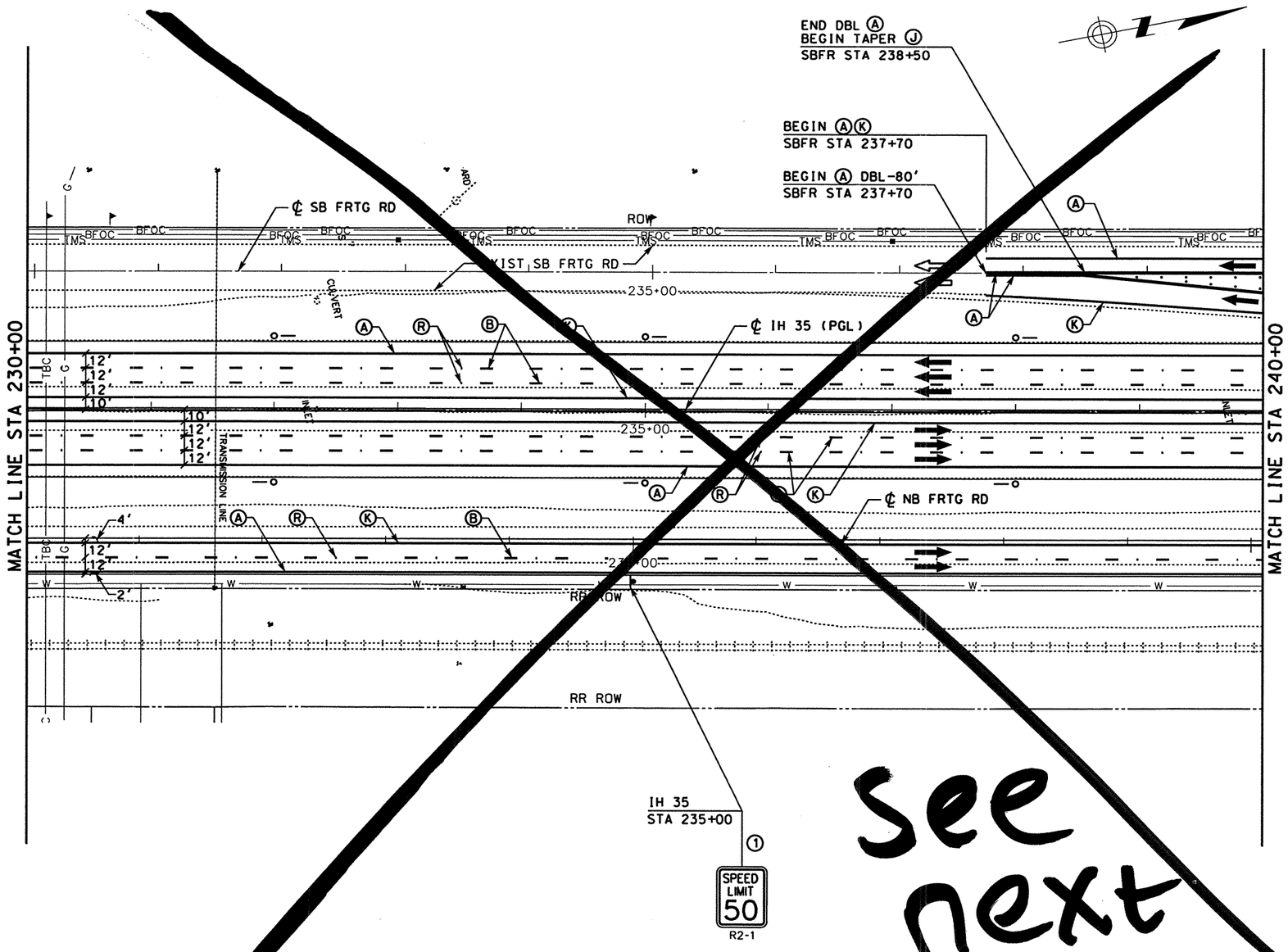

see next

STRIPING LEGEND

- Ⓐ REFL PAV MRK TY I & II (W)(SLD)(4")
- Ⓑ REFL PAV MRK TY I & II (W)(BRK)(4")
- Ⓒ REFL PAV MRK TY I & II (W)(SLD)(8")
- Ⓓ REFL PAV MRK TY I & II (W)(DOT)(4")
- Ⓔ REFL PAV MRK TY I & II (W)(SLD)(12")
- Ⓕ REFL PAV MRK TY I & II (W)(SLD)(24")
- Ⓛ REFL PAV MRK TY I & II (W)(LNDP)(12")
- Ⓖ REFL PAV MRK TY I & II (W)(ARROW)
- Ⓗ REFL PAV MRK TY I & II (W)(DBL ARROW)
- Ⓣ REFL PAV MRK TY I & II (W)(TND ARROW)
- Ⓘ REFL PAV MRK TY I & II (W)(WORD)
- Ⓙ REFL PAV MRK TY I & II (W)(ENT GORE)
- Ⓚ REFL PAV MRK TY I & II (Y)(SLD)(4")
- Ⓜ REFL PAV MRK TY I & II (Y)(SLD)(8")
- Ⓝ REFL PAV MRK TY I & II (Y)(SLD)(12")
- Ⓢ REFL PAV MRK TY I & II (Y)(SLD)(24")
- Ⓓ RAIS PAV MRKR CL B (REFL) TY I-A
- Ⓡ RAIS PAV MRKR CL B (REFL) TY II-C-R
- Ⓞ RAIS PAV MRKR CL B (REFL) TY II-A-A

SIGNING AND DELINEATION LEGEND

- TRAFFIC FLOW ARROWS (PROPOSED)
- TRAFFIC FLOW ARROWS (EXISTING)
- (#) SMALL SIGN TO BE INSTALLED ITEM (644)
- (E) SIGN TO REMAIN IN PLACE
- (#) SIGN TO BE REMOVED ITEM (649)
- (#) SIGN TO BE RELOCATED (ITEM 649)
- [L#] LARGE SIGN TO BE INSTALLED
- SIGN POST FOR SMALL SIGN
- DOUBLE POSTED SIGN
- SIGN POST, BACK TO BACK SMALL SIGNS
- "K" MARKER
- DELINEATOR (D-SW) (A)
- DELINEATOR (D-SY) (A)
- DELINEATOR (D-DW) (A)
- OBJECT MARKER (OM-2VP)
- OBJECT MARKER (OM-2SR)
- OBJECT MARKER (OB-3B)

0 50 100
SCALE: 1" = 100'

STATE OF TEXAS
SIDNEY S. AFONSO
88055
REGISTERED PROFESSIONAL ENGINEER

THE SEAL APPEARING ON THIS DOCUMENT WAS AUTHORIZED BY SIDNEY S. AFONSO PE 88055, ON MAY 07, 2003

KBR
Engineered by KBR Technical Services, Inc

©2003 Texas Department of Transportation

IH 35
LOOP 20 TO UNIROYAL ROAD
SIGNING AND PAVEMENT MARKINGS
STA 230+00 TO
STA 240+00

SHEET 11 OF 33

FED RD DIV NO	FEDERAL AID PROJECT NO		SHEET NO
6	NH-2002 (79)		780
STATE	STATE DIST		COUNTY
TEXAS	LAREDO		WEBB
CONT	SECT	JOB	HIGHWAY NO
0018	05	062, ETC	IH 35

REF FILE(S): j011op01.bdr, bdr LV ON = 14,31,45,50,57,58,60-62
j011op01.alg, alg LV ON = 1-6,35-39
j011op01.bck, bck LV ON = 2,9,10,14,17,20,21,25,28
j011op01.eop, eop LV ON = 1-17,19-63
j011op01.uti, uti LV ON = 1-63
j011op01.spm, spm LV ON = 1-63
miloint.row, row LV ON = 1-22,24-63

b22iop08.dgn-13 HOUFILE023 \hcivil\cf0130\ 5/8/2003

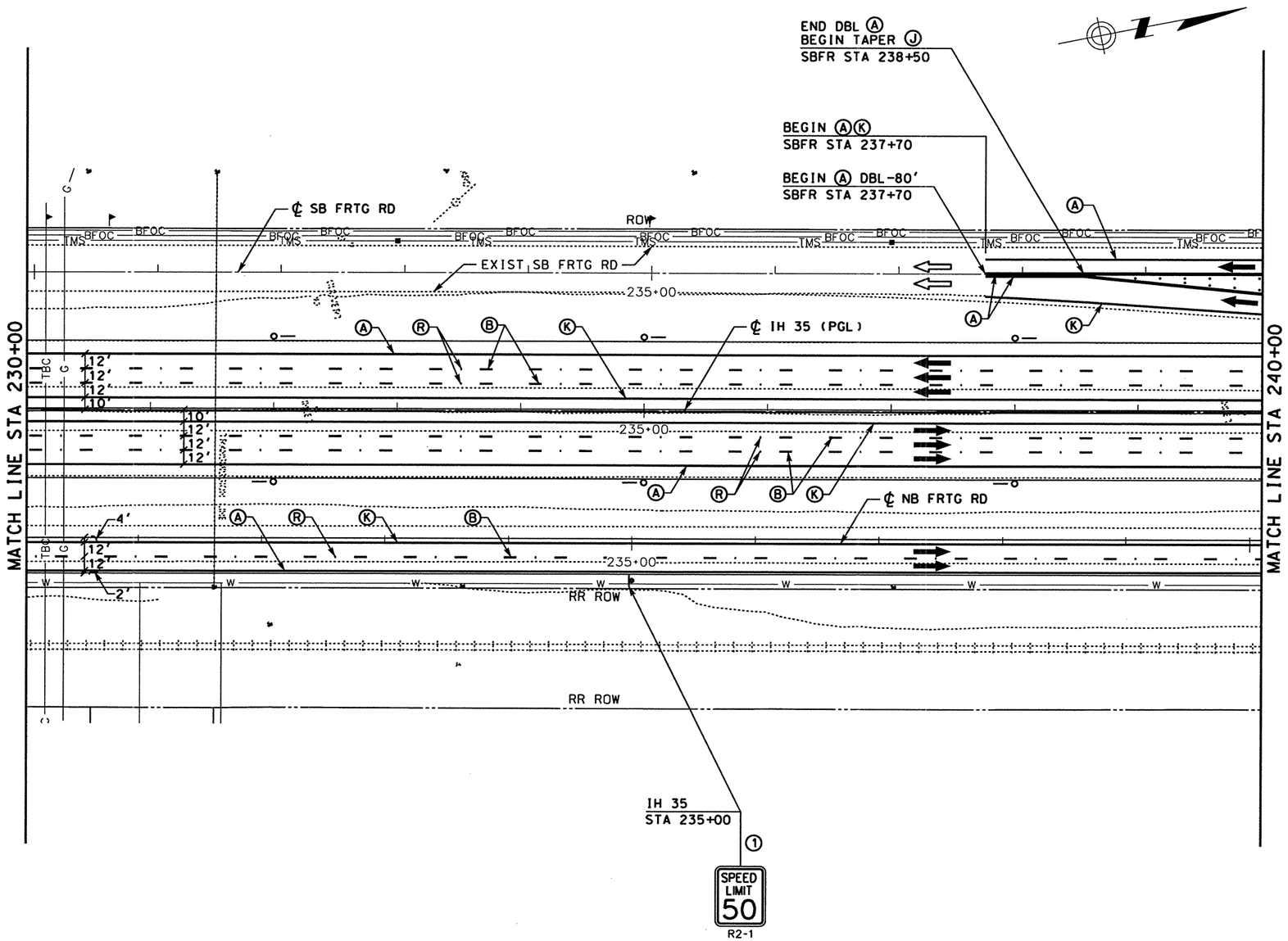

STRIPING LEGEND

- Ⓐ REFL PAV MRK TY I & II (W)(SLD)(4")
- Ⓑ REFL PAV MRK TY I & II (W)(BRK)(4")
- Ⓒ REFL PAV MRK TY I & II (W)(SLD)(8")
- Ⓓ REFL PAV MRK TY I & II (W)(DOT)(4")
- Ⓔ REFL PAV MRK TY I & II (W)(SLD)(12")
- Ⓕ REFL PAV MRK TY I & II (W)(SLD)(24")
- Ⓛ REFL PAV MRK TY I & II (W)(LNDP)(12")
- Ⓖ REFL PAV MRK TY I & II (W)(ARROW)
- Ⓗ REFL PAV MRK TY I & II (W)(DBL ARROW)
- Ⓣ REFL PAV MRK TY I & II (W)(TND ARROW)
- Ⓘ REFL PAV MRK TY I & II (W)(WORD)
- Ⓙ REFL PAV MRK TY I & II (W)(ENT GORE)
- Ⓚ REFL PAV MRK TY I & II (Y)(SLD)(4")
- Ⓜ REFL PAV MRK TY I & II (Y)(SLD)(8")
- Ⓝ REFL PAV MRK TY I & II (Y)(SLD)(12")
- Ⓢ REFL PAV MRK TY I & II (Y)(SLD)(24")
- Ⓓ RAIS PAV MRKR CL B (REFL) TY I-A
- Ⓡ RAIS PAV MRKR CL B (REFL) TY II-C-R
- Ⓠ RAIS PAV MRKR CL B (REFL) TY II-A-A

SIGNING AND DELINEATION LEGEND

- TRAFFIC FLOW ARROWS ~~(PROPOSED)~~
- TRAFFIC FLOW ARROWS (EXISTING)
- SMALL SIGN TO BE INSTALLED ITEM (644)
- SIGN TO REMAIN IN PLACE
- SIGN TO BE REMOVED ITEM (649)
- SIGN TO BE RELOCATED (ITEM 649)
- LARGE SIGN TO BE INSTALLED
- SIGN POST FOR SMALL SIGN
- DOUBLE POSTED SIGN
- SIGN POST, BACK TO BACK SMALL SIGNS
- "K" MARKER
- DELINEATOR (D-SW) (A)
- DELINEATOR (D-SY) (A)
- DELINEATOR (D-DW) (A)
- OBJECT MARKER (OM-2VP)
- OBJECT MARKER (OM-2SR)
- OBJECT MARKER (OB-3B)

0 50 100
SCALE: 1" = 100'

STATE OF TEXAS
SIDNEY S. AFONSO
88055
REGISTERED PROFESSIONAL ENGINEER

THE SEAL APPEARING ON THIS DOCUMENT WAS AUTHORIZED BY SIDNEY S. AFONSO PE 88055, ON MARCH 05, 2004

KBR
Engineered by KBR Technical Services, Inc

©2003 Texas Department of Transportation

IH 35
LOOP 20 TO UNIROYAL ROAD
SIGNING AND PAVEMENT MARKINGS
STA 230+00 TO STA 240+00

SHEET 11 OF 33

FED RD DIV NO	FEDERAL AID PROJECT NO		SHEET NO
6	NH-2002 (79)		780
STATE	STATE DIST		COUNTY
TEXAS	LAREDO		WEBB
CONT	SECT	JOB	HIGHWAY NO
0018	05	062, ETC	IH 35

DATE	BY	REV	REVISION
02/17/04	AA	1	MAINLANE SHLDR WIDEN REV EDGE OF PAVEMENT AND PAVEMENT LIMITS

REF FILE(S): j01lop01.uti, uti LV ON = 1-63
j01lop01.eop, eop LV ON = 1-17,19-63
j01lop01.bck, bck LV ON = 2,9,10,14,17,20,21,25,28
j01lop01.alg, alg LV ON = 1-6,35-39
j01lop01.bdr, bdr LV ON = 14,31,45,50,57,58,60-62
j01lop01.spm, spm LV ON = 1-63
miloint.row, row LV ON = 1-22,24-63

b22lop08.dgn-13 HOUFILE023 \hcivil\cf0130\ 3/4/2004

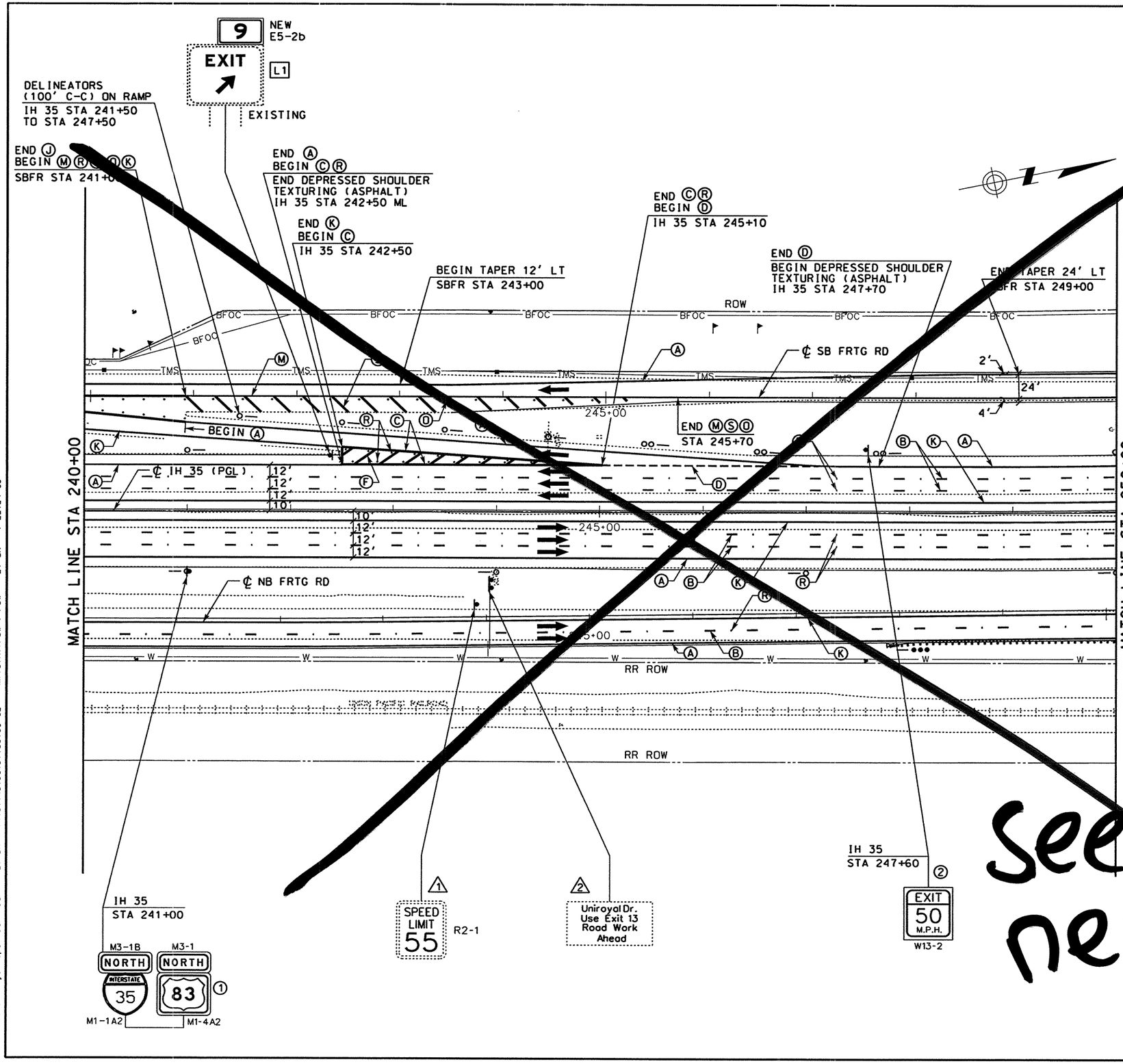

STRIPING LEGEND

- (A) REFL PAV MRK TY I & II (W)(SLD)(4")
- (B) REFL PAV MRK TY I & II (W)(BRK)(4")
- (C) REFL PAV MRK TY I & II (W)(SLD)(8")
- (D) REFL PAV MRK TY I & II (W)(DOT)(4")
- (E) REFL PAV MRK TY I & II (W)(SLD)(12")
- (F) REFL PAV MRK TY I & II (W)(SLD)(24")
- (L) REFL PAV MRK TY I & II (W)(LNDP)(12")
- (G) REFL PAV MRK TY I & II (W)(ARROW)
- (H) REFL PAV MRK TY I & II (W)(DBL ARROW)
- (T) REFL PAV MRK TY I & II (W)(TND ARROW)
- (I) REFL PAV MRK TY I & II (W)(WORD)
- (J) REFL PAV MRK TY I & II (W)(ENT GORE)
- (K) REFL PAV MRK TY I & II (Y)(SLD)(4")
- (M) REFL PAV MRK TY I & II (Y)(SLD)(8")
- (N) REFL PAV MRK TY I & II (Y)(SLD)(12")
- (S) REFL PAV MRK TY I & II (Y)(SLD)(24")
- (O) RAIS PAV MRKR CL B (REFL) TY I-A
- (R) RAIS PAV MRKR CL B (REFL) TY II-C-R
- (O) RAIS PAV MRKR CL B (REFL) TY II-A-A

SIGNING AND DELINEATION LEGEND

- TRAFFIC FLOW ARROWS (PROPOSED)
- TRAFFIC FLOW ARROWS (EXISTING)
- (#) SMALL SIGN TO BE INSTALLED ITEM (644)
- (E) SIGN TO REMAIN IN PLACE
- (#) SIGN TO BE REMOVED ITEM (649)
- (#) SIGN TO BE RELOCATED (ITEM 649)
- [L#] LARGE SIGN TO BE INSTALLED
- SIGN POST FOR SMALL SIGN
- DOUBLE POSTED SIGN
- SIGN POST, BACK TO BACK SMALL SIGNS
- "K" MARKER
- DELINEATOR (D-SW) (A)
- DELINEATOR (D-SY) (A)
- DELINEATOR (D-DW) (A)
- OBJECT MARKER (OM-2VP)
- OBJECT MARKER (OM-2SR)
- OBJECT MARKER (OB-3B)

See next

0 50 100
SCALE: 1" = 100'

STATE OF TEXAS
SIDNEY S. AFONSO
PE 88055
REGISTERED PROFESSIONAL ENGINEER

THE SEAL APPEARING ON THIS DOCUMENT WAS AUTHORIZED BY SIDNEY S. AFONSO PE 88055, ON MAY 30, 2003

KBR
Engineered by KBR Technical Services, Inc

©2003 Texas Department of Transportation

IH 35
LOOP 20 TO UNIROYAL ROAD
SIGNING AND PAVEMENT MARKINGS
STA 240+00 TO
STA 250+00

SHEET 12 OF 33

FED RD DIV NO	FEDERAL AID PROJECT NO		SHEET NO
6	NH-2002 (79)		781
STATE	STATE DIST		COUNTY
TEXAS	LAREDO		WEBB
CONT	SECT	JOB	HIGHWAY NO
0018	05	062, ETC	IH 35

6/2/2003
HOUFILE023 \hcivil\cf0130\
b22lop09.dgn-09

REF FILE(S): j01lop01.bdr, bdr LV ON = 14,31,45,50,57,58,60-62
j01lop01.alg, alg LV ON = 1-6,35-39
j01lop01.bck, bck LV ON = 2,9,10,14,17,20,21,25,28
j01lop01.eop, eop LV ON = 1-17,19-63
j01lop01.utl, utl LV ON = 1-63
j01lop01.spm, spm LV ON = 1-63
miloint.row, row LV ON = 1-22,24-63

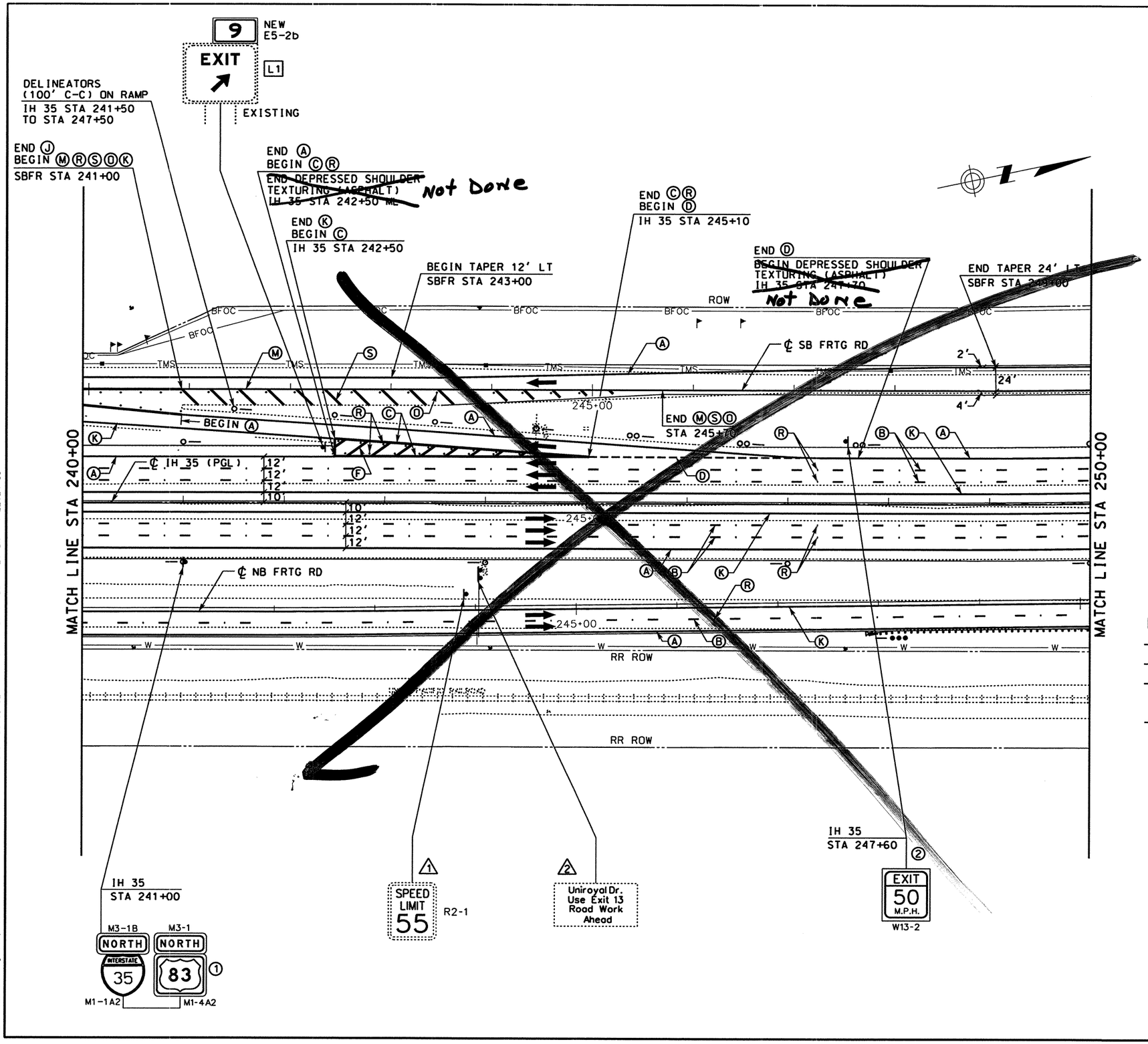

STRIPING LEGEND

- Ⓐ REFL PAV MRK TY I & II (W)(SLD)(4")
- Ⓑ REFL PAV MRK TY I & II (W)(BRK)(4")
- Ⓒ REFL PAV MRK TY I & II (W)(SLD)(8")
- Ⓓ REFL PAV MRK TY I & II (W)(DOT)(4")
- Ⓔ REFL PAV MRK TY I & II (W)(SLD)(12")
- Ⓕ REFL PAV MRK TY I & II (W)(SLD)(24")
- Ⓛ REFL PAV MRK TY I & II (W)(LNDP)(12")
- Ⓖ REFL PAV MRK TY I & II (W)(ARROW)
- Ⓗ REFL PAV MRK TY I & II (W)(DBL ARROW)
- Ⓣ REFL PAV MRK TY I & II (W)(TND ARROW)
- Ⓘ REFL PAV MRK TY I & II (W)(WORD)
- Ⓙ REFL PAV MRK TY I & II (W)(ENT GORE)
- Ⓚ REFL PAV MRK TY I & II (Y)(SLD)(4")
- Ⓜ REFL PAV MRK TY I & II (Y)(SLD)(8")
- Ⓝ REFL PAV MRK TY I & II (Y)(SLD)(12")
- Ⓢ REFL PAV MRK TY I & II (Y)(SLD)(24")
- Ⓓ RAIS PAV MRKR CL B (REFL) TY I-A
- Ⓡ RAIS PAV MRKR CL B (REFL) TY II-C-R
- Ⓞ RAIS PAV MRKR CL B (REFL) TY II-A-A

SIGNING AND DELINEATION LEGEND

- TRAFFIC FLOW ARROWS (PROPOSED)
- TRAFFIC FLOW ARROWS (EXISTING)
- # SMALL SIGN TO BE INSTALLED ITEM (644)
- Ⓔ SIGN TO REMAIN IN PLACE
- # SIGN TO BE REMOVED ITEM (649)
- # SIGN TO BE RELOCATED (ITEM 649)
- L# LARGE SIGN TO BE INSTALLED
- SIGN POST FOR SMALL SIGN
- DOUBLE POSTED SIGN
- SIGN POST, BACK TO BACK SMALL SIGNS
- "K" MARKER
- DELINEATOR (D-SW) (A)
- DELINEATOR (D-SY) (A)
- DELINEATOR (D-DW) (A)
- OBJECT MARKER (OM-2VP)
- OBJECT MARKER (OM-2SR)
- OBJECT MARKER (OB-3B)

0 50 100
SCALE: 1" = 100'

STATE OF TEXAS
SIDNEY S. AFONSO
P. 88055
REGISTERED PROFESSIONAL ENGINEER

THE SEAL APPEARING ON THIS DOCUMENT WAS AUTHORIZED BY SIDNEY S. AFONSO PE 88055, ON MARCH 05, 2004

KBR
Engineered by KBR Technical Services, Inc

©2003 Texas Department of Transportation

IH 35
LOOP 20 TO UNIROYAL ROAD
SIGNING AND PAVEMENT MARKINGS
STA 240+00 TO
STA 250+00

SHEET 12 OF 33

FED RD DIV NO	FEDERAL AID PROJECT NO		SHEET NO
6	NH-2002 (79)		781
STATE	STATE DIST		COUNTY
TEXAS	LAREDO		WEBB
CONT	SECT	JOB	HIGHWAY NO
0018	05	062, ETC	IH 35

DATE	BY	REV	REVISION
02/17/04	AA	1	MAINLANE SHLDR WIDEN REV EDGE OF PAVEMENT AND PAVEMENT LIMITS

REF FILE(S): j011op01.uti, uti LV ON = 1-63
j011op01.uti, uti LV ON = 1-63
j011op01.eop, eop LV ON = 1-17,19-63
j011op01.bck, bck LV ON = 2,9,10,14,17,20,21,25,28
j011op01.alg, alg LV ON = 1-6,35-39
j011op01.bdr, bdr LV ON = 14,31,45,50,57,58,60-62
j011op01.spm, spm LV ON = 1-63
mi1joint.row, row LV ON = 1-22,24-63

b22lop09.dgn-09 HOUFILE023 \hcivil\cf0130\ 3/4/2004

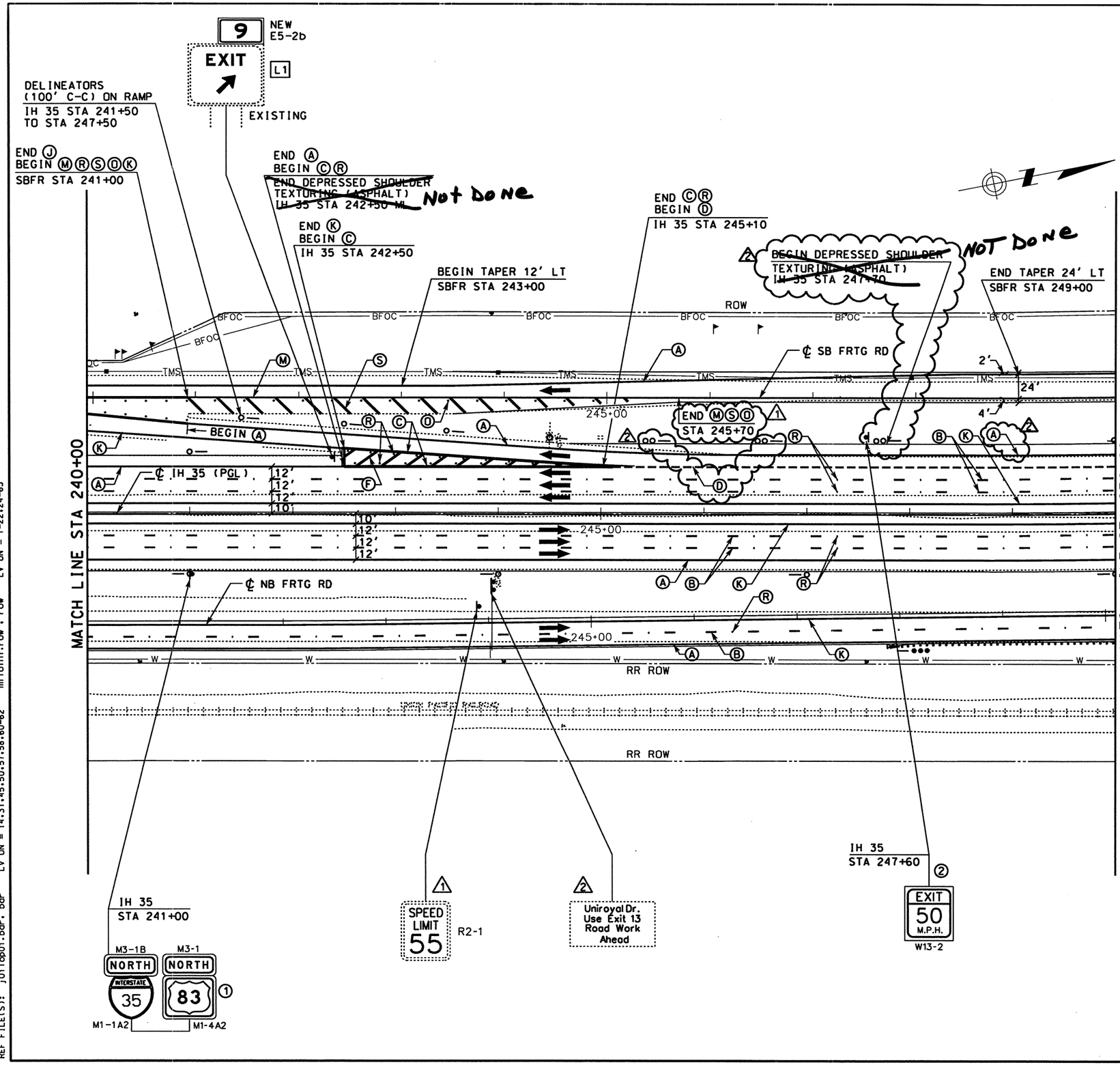

STRIPING LEGEND

- Ⓐ REFL PAV MRK TY I & II (W)(SLD)(4")
- Ⓑ REFL PAV MRK TY I & II (W)(BRK)(4")
- Ⓒ REFL PAV MRK TY I & II (W)(SLD)(8")
- Ⓓ REFL PAV MRK TY I & II (W)(DOT)(4")
- Ⓔ REFL PAV MRK TY I & II (W)(SLD)(12")
- Ⓕ REFL PAV MRK TY I & II (W)(SLD)(24")
- Ⓛ REFL PAV MRK TY I & II (W)(LNDP)(12")
- Ⓖ REFL PAV MRK TY I & II (W)(ARROW)
- Ⓗ REFL PAV MRK TY I & II (W)(DBL ARROW)
- Ⓣ REFL PAV MRK TY I & II (W)(TND ARROW)
- Ⓘ REFL PAV MRK TY I & II (W)(WORD)
- Ⓙ REFL PAV MRK TY I & II (W)(ENT GORE)
- Ⓚ REFL PAV MRK TY I & II (Y)(SLD)(4")
- Ⓜ REFL PAV MRK TY I & II (Y)(SLD)(8")
- Ⓝ REFL PAV MRK TY I & II (Y)(SLD)(12")
- Ⓢ REFL PAV MRK TY I & II (Y)(SLD)(24")
- Ⓓ RAIS PAV MRKR CL B (REFL) TY I-A
- Ⓡ RAIS PAV MRKR CL B (REFL) TY II-C-R
- Ⓞ RAIS PAV MRKR CL B (REFL) TY II-A-A

SIGNING AND DELINEATION LEGEND

- TRAFFIC FLOW ARROWS (~~PROPOSED~~)
- TRAFFIC FLOW ARROWS (EXISTING)
- (#) SMALL SIGN TO BE INSTALLED ITEM (644)
- (E) SIGN TO REMAIN IN PLACE
- (#) SIGN TO BE REMOVED ITEM (649)
- (#) SIGN TO BE RELOCATED (ITEM 649)
- [L#] LARGE SIGN TO BE INSTALLED
- SIGN POST FOR SMALL SIGN
- DOUBLE POSTED SIGN
- SIGN POST, BACK TO BACK SMALL SIGNS
- "K" MARKER
- DELINEATOR (D-SW) (A)
- DELINEATOR (D-SY) (A)
- DELINEATOR (D-DW) (A)
- OBJECT MARKER (OM-2VP)
- OBJECT MARKER (OM-2SR)
- OBJECT MARKER (OB-3B)

0 50 100
SCALE: 1" = 100'

STATE OF TEXAS
SIDNEY S. AFONSO
PE 88055
REGISTERED PROFESSIONAL ENGINEER

THE SEAL APPEARING ON THIS DOCUMENT WAS AUTHORIZED BY SIDNEY S. AFONSO PE 88055, ON FEBRUARY 10, 2005

KBR
Engineered by KBR Technical Services, Inc

©2004 Texas Department of Transportation

IH 35
LOOP 20 TO UNIROYAL ROAD
SIGNING AND PAVEMENT MARKINGS
STA 240+00 TO
STA 250+00

SHEET 12 OF 33

DATE	BY	REV	REVISION
02/17/04	AA	1	MAINLANE SHLDR WIDEN REV EDGE OF PAVEMENT AND PAVEMENT LIMITS
11/30/04	AA	2	ADD AUXILIARY LANE

FED RD DIV NO	FEDERAL AID PROJECT NO		SHEET NO
6	NH-2002 (79)		781
STATE	STATE DIST		COUNTY
TEXAS	LAREDO		WEBB
CONT	SECT	JOB	HIGHWAY NO
0018	05	062, ETC	IH 35

2/10/2005
HOUFILE023 \hchvil\cf0130\
b22lop09.dgn-09

REF FILE(S): j011op01.bdr, bdr LV ON = 14,31,45,50,57,58,60-62
j011op01.dlg, dlg LV ON = 1-6,35-39
j011op01.bck, bck LV ON = 2,9,10,14,17,20,21,25,28
j011op01.eop, eop LV ON = 1-17,19-63
j011op01.uti, uti LV ON = 1-63
j011op01.spm, spm LV ON = 1-63
milpoint.row, row LV ON = 1-22,24-63

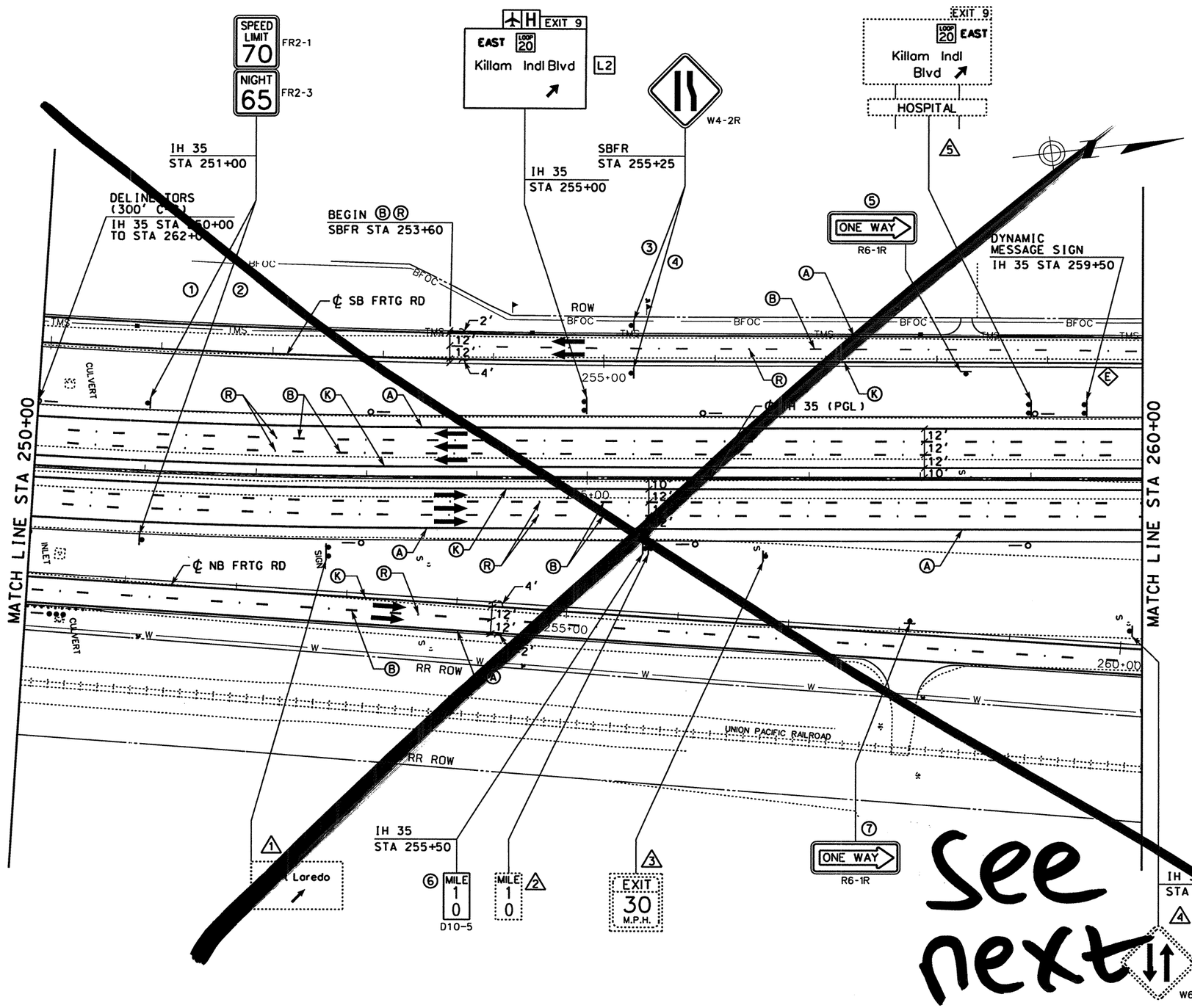

STRIPING LEGEND

- Ⓐ REFL PAV MRK TY I & II (W)(SLD)(4")
- Ⓑ REFL PAV MRK TY I & II (W)(BRK)(4")
- Ⓒ REFL PAV MRK TY I & II (W)(SLD)(8")
- Ⓓ REFL PAV MRK TY I & II (W)(DOT)(4")
- Ⓔ REFL PAV MRK TY I & II (W)(SLD)(12")
- Ⓕ REFL PAV MRK TY I & II (W)(SLD)(24")
- Ⓛ REFL PAV MRK TY I & II (W)(LNDP)(12")
- Ⓖ REFL PAV MRK TY I & II (W)(ARROW)
- Ⓗ REFL PAV MRK TY I & II (W)(DBL ARROW)
- Ⓣ REFL PAV MRK TY I & II (W)(TND ARROW)
- Ⓘ REFL PAV MRK TY I & II (W)(WORD)
- Ⓙ REFL PAV MRK TY I & II (W)(ENT GORE)
- Ⓚ REFL PAV MRK TY I & II (Y)(SLD)(4")
- Ⓜ REFL PAV MRK TY I & II (Y)(SLD)(8")
- Ⓝ REFL PAV MRK TY I & II (Y)(SLD)(12")
- Ⓢ REFL PAV MRK TY I & II (Y)(SLD)(24")
- Ⓞ RAIS PAV MRKR CL B (REFL) TY I-A
- Ⓡ RAIS PAV MRKR CL B (REFL) TY II-C-R
- Ⓠ RAIS PAV MRKR CL B (REFL) TY II-A-A

SIGNING AND DELINEATION LEGEND

- TRAFFIC FLOW ARROWS (PROPOSED)
- TRAFFIC FLOW ARROWS (EXISTING)
- (#) SMALL SIGN TO BE INSTALLED ITEM (644)
- (E) SIGN TO REMAIN IN PLACE
- (#) SIGN TO BE REMOVED ITEM (649)
- (#) SIGN TO BE RELOCATED (ITEM 649)
- L# LARGE SIGN TO BE INSTALLED
- SIGN POST FOR SMALL SIGN
- DOUBLE POSTED SIGN
- SIGN POST, BACK TO BACK SMALL SIGNS
- "K" MARKER
- DELINEATOR (D-SW) (A)
- DELINEATOR (D-SY) (A)
- DELINEATOR (D-DW) (A)
- OBJECT MARKER (OM-2VP)
- OBJECT MARKER (OM-2SR)
- OBJECT MARKER (OB-3B)

0 50 100
SCALE: 1" = 100'

STATE OF TEXAS
SIDNEY S. AFONSO
88055
REGISTERED PROFESSIONAL ENGINEER

THE SEAL APPEARING ON THIS DOCUMENT WAS AUTHORIZED BY SIDNEY S. AFONSO PE 88055, ON MAY 07, 2003

Sidney Afonso

KBR
Engineered by KBR Technical Services, Inc

©2003 Texas Department of Transportation

IH 35
LOOP 20 TO UNIROYAL ROAD
SIGNING AND PAVEMENT MARKINGS
STA 250+00 TO
STA 260+00

SHEET 13 OF 33

FED RD DIV NO	FEDERAL AID PROJECT NO		SHEET NO
6	NH-2002 (79)		782
STATE	STATE DIST		COUNTY
TEXAS	LAREDO		WEBB
CONT	SECT	JOB	HIGHWAY NO
0018	05	062, ETC	IH 35

REF FILE(S): j01lop01.uti, uti LV ON = 1-63
j01lop01.eop, eop LV ON = 1-17,19-63
j01lop01.bck, bck LV ON = 2,9,10,14,17,20,21,25,28
j01lop01.alg, alg LV ON = 1-6,35-39
j01lop01.bdr, bdr LV ON = 14,31,45,50,57,58,60-62
j01lop01.spm, spm LV ON = 1-63
miloint.row, row LV ON = 1-22,24-63

b22lop10.dgn-08 HOUFILE023 \hcivil\cf0130\ 5/8/2003

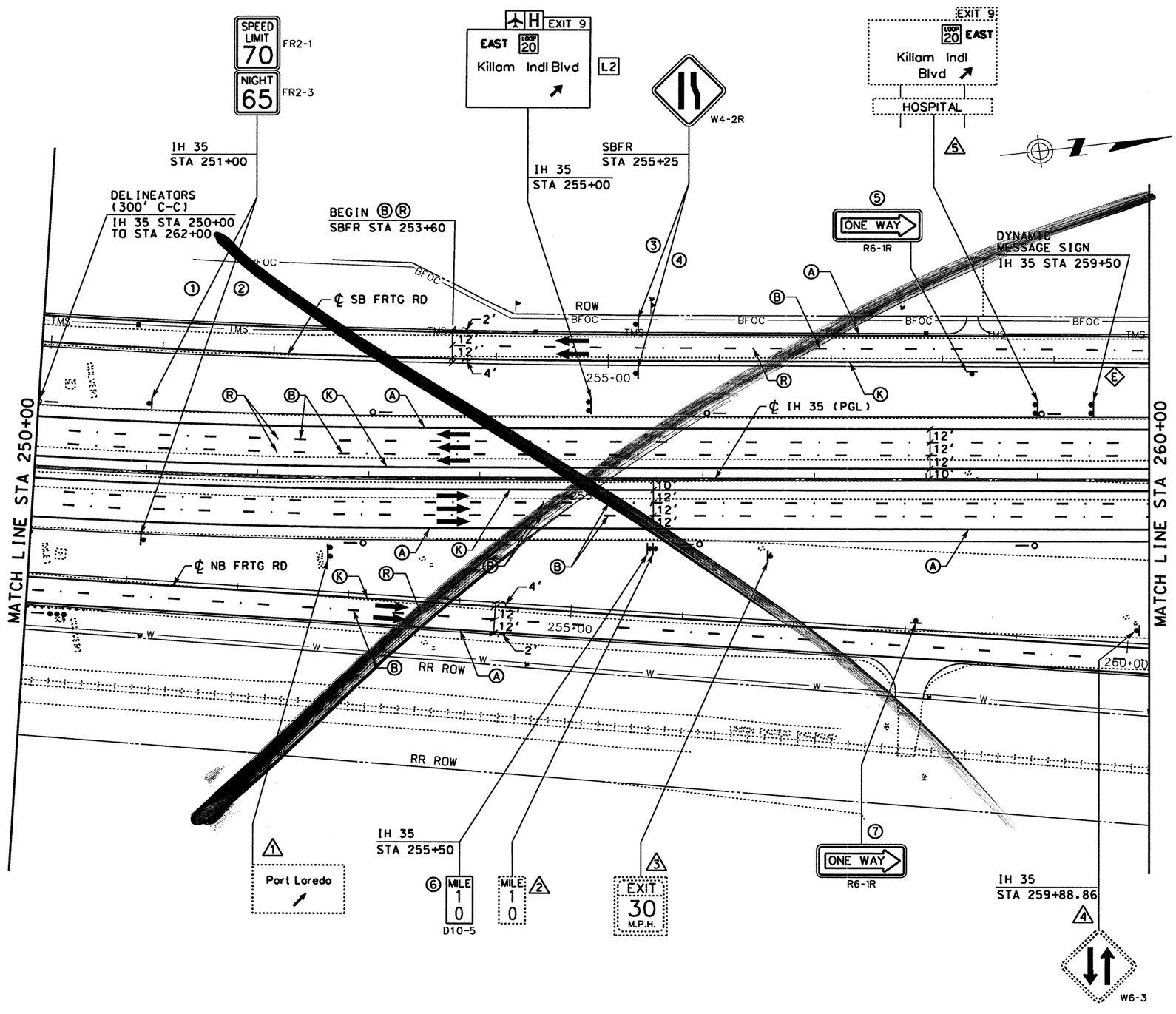

STRIPING LEGEND

- Ⓐ REFL PAV MRK TY I & II (W)(SLD)(4")
- Ⓑ REFL PAV MRK TY I & II (W)(BRK)(4")
- Ⓒ REFL PAV MRK TY I & II (W)(SLD)(8")
- Ⓓ REFL PAV MRK TY I & II (W)(DOT)(4")
- Ⓔ REFL PAV MRK TY I & II (W)(SLD)(12")
- Ⓕ REFL PAV MRK TY I & II (W)(SLD)(24")
- Ⓛ REFL PAV MRK TY I & II (W)(LNDP)(12")
- Ⓖ REFL PAV MRK TY I & II (W)(ARROW)
- Ⓗ REFL PAV MRK TY I & II (W)(DBL ARROW)
- Ⓣ REFL PAV MRK TY I & II (W)(TND ARROW)
- Ⓘ REFL PAV MRK TY I & II (W)(WORD)
- Ⓙ REFL PAV MRK TY I & II (W)(ENT GORE)
- Ⓚ REFL PAV MRK TY I & II (Y)(SLD)(4")
- Ⓜ REFL PAV MRK TY I & II (Y)(SLD)(8")
- Ⓝ REFL PAV MRK TY I & II (Y)(SLD)(12")
- Ⓢ REFL PAV MRK TY I & II (Y)(SLD)(24")
- Ⓓ RAIS PAV MRKR CL B (REFL) TY I-A
- Ⓡ RAIS PAV MRKR CL B (REFL) TY II-C-R
- Ⓞ RAIS PAV MRKR CL B (REFL) TY II-A-A

SIGNING AND DELINEATION LEGEND

- TRAFFIC FLOW ARROWS (PROPOSED)
- TRAFFIC FLOW ARROWS (EXISTING)
- # SMALL SIGN TO BE INSTALLED ITEM (644)
- E SIGN TO REMAIN IN PLACE
- # SIGN TO BE REMOVED ITEM (649)
- # SIGN TO BE RELOCATED (ITEM 649)
- L# LARGE SIGN TO BE INSTALLED
- SIGN POST FOR SMALL SIGN
- DOUBLE POSTED SIGN
- SIGN POST, BACK TO BACK SMALL SIGNS
- "K" MARKER
- DELINEATOR (D-SW) (A)
- DELINEATOR (D-SY) (A)
- DELINEATOR (D-DW) (A)
- OBJECT MARKER (OM-2VP)
- OBJECT MARKER (OM-2SR)
- OBJECT MARKER (OB-3B)

0 50 100
SCALE: 1" = 100'

STATE OF TEXAS
SIDNEY S. AFONSO
P. 88055
REGISTERED PROFESSIONAL ENGINEER

THE SEAL APPEARING ON THIS DOCUMENT WAS AUTHORIZED BY SIDNEY S. AFONSO PE 88055, ON MARCH 05, 2004

KBR
Engineered by KBR Technical Services, Inc

©2003 Texas Department of Transportation

IH 35
LOOP 20 TO UNIROYAL ROAD
SIGNING AND PAVEMENT MARKINGS
STA 250+00 TO
STA 260+00

SHEET 13 OF 33

FED RD DIV NO	FEDERAL AID PROJECT NO		SHEET NO
6	NH-2002 (79)		782
STATE	STATE DIST		COUNTY
TEXAS	LAREDO		WEBB
CONT	SECT	JOB	HIGHWAY NO
0018	05	062, ETC	IH 35

DATE	BY	REV	REVISION
02/17/04	AA	1	MAINLANE SHLDR WIDEN REV EDGE OF PAVEMENT AND PAVEMENT LIMITS

REF FILE(S): j011op01.uti, uti LV ON = 1-63
j011op01.eop, eop LV ON = 1-17,19-63
j011op01.bck, bck LV ON = 2,9,10,14,17,20,21,25,28
j011op01.alg, alg LV ON = 1-6,35-39
j011op01.bdr, bdr LV ON = 14,31,45,50,57,58,60-62
j011op01.spm, spm LV ON = 1-63
mlloint.row, row LV ON = 1-22,24-63

3/4/2004
HOUFILE023 \hctvil\cf0130\
b22lop10.dgn-08

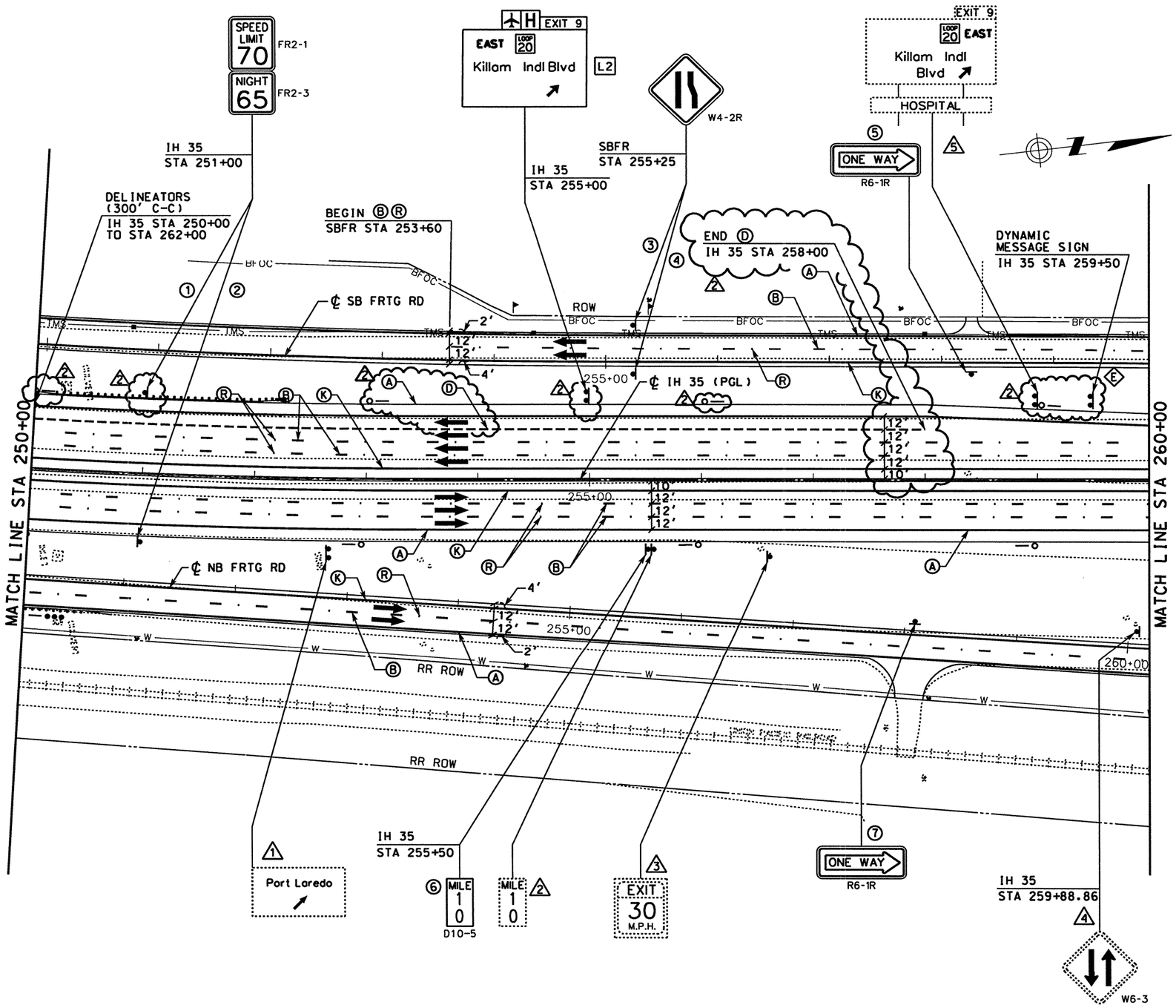

STRIPING LEGEND

- Ⓐ REFL PAV MRK TY I & II (W)(SLD)(4")
- Ⓑ REFL PAV MRK TY I & II (W)(BRK)(4")
- Ⓒ REFL PAV MRK TY I & II (W)(SLD)(8")
- Ⓓ REFL PAV MRK TY I & II (W)(DOT)(4")
- Ⓔ REFL PAV MRK TY I & II (W)(SLD)(12")
- Ⓕ REFL PAV MRK TY I & II (W)(SLD)(24")
- Ⓛ REFL PAV MRK TY I & II (W)(LNDP)(12")
- Ⓖ REFL PAV MRK TY I & II (W)(ARROW)
- Ⓗ REFL PAV MRK TY I & II (W)(DBL ARROW)
- Ⓣ REFL PAV MRK TY I & II (W)(TND ARROW)
- Ⓘ REFL PAV MRK TY I & II (W)(WORD)
- Ⓙ REFL PAV MRK TY I & II (W)(ENT GORE)
- Ⓚ REFL PAV MRK TY I & II (Y)(SLD)(4")
- Ⓜ REFL PAV MRK TY I & II (Y)(SLD)(8")
- Ⓝ REFL PAV MRK TY I & II (Y)(SLD)(12")
- Ⓢ REFL PAV MRK TY I & II (Y)(SLD)(24")
- Ⓞ RAIS PAV MRKR CL B (REFL) TY I-A
- Ⓡ RAIS PAV MRKR CL B (REFL) TY II-C-R
- Ⓠ RAIS PAV MRKR CL B (REFL) TY II-A-A

SIGNING AND DELINEATION LEGEND

- TRAFFIC FLOW ARROWS (~~PROPOSED~~)
- TRAFFIC FLOW ARROWS (EXISTING)
- SMALL SIGN TO BE INSTALLED ITEM (644)
- SIGN TO REMAIN IN PLACE
- SIGN TO BE REMOVED ITEM (649)
- SIGN TO BE RELOCATED (ITEM 649)
- LARGE SIGN TO BE INSTALLED
- SIGN POST FOR SMALL SIGN
- DOUBLE POSTED SIGN
- SIGN POST, BACK TO BACK SMALL SIGNS
- "K" MARKER
- DELINEATOR (D-SW) (A)
- DELINEATOR (D-SY) (A)
- DELINEATOR (D-DW) (A)
- OBJECT MARKER (OM-2VP)
- OBJECT MARKER (OM-2SR)
- OBJECT MARKER (OB-3B)

0 50 100
SCALE: 1" = 100'

STATE OF TEXAS
SIDNEY S. AFONSO
88055
REGISTERED PROFESSIONAL ENGINEER

THE SEAL APPEARING ON THIS DOCUMENT WAS AUTHORIZED BY SIDNEY S. AFONSO PE 88055, ON FEBRUARY 10, 2005

KBR
Engineered by KBR Technical Services, Inc

©2004 Texas Department of Transportation

IH 35
LOOP 20 TO UNIROYAL ROAD
SIGNING AND PAVEMENT MARKINGS
STA 250+00 TO STA 260+00

SHEET 13 OF 33

DATE	BY	REV	REVISION
02/17/04	AA	1	MAINLANE SHLDR WIDEN REV EDGE OF PAVEMENT AND PAVEMENT LIMITS
11/30/04	AA	2	ADD AUXILIARY LANE

FED RD DIV NO	FEDERAL AID PROJECT NO		SHEET NO
6	NH-2002 (79)		782
STATE	STATE DIST		COUNTY
TEXAS	LAREDO		WEBB
CONT	SECT	JOB	HIGHWAY NO
0018	05	062, ETC	IH 35

j01lop01.uti, uti LV ON = 1-63
j01lop01.eop, eop LV ON = 1-17,19-63
j01lop01.bck, bck LV ON = 2,9,10,14,17,20,21,25,28
j01lop01.alg, alg LV ON = 1-6,35-39
j01lop01.bdr, bdr LV ON = 14,31,45,50,57,58,60-62
j01lop01.spm, spm LV ON = 1-63
miloint.row, row LV ON = 1-22,24-63
REF FILE(S):
b22lop10.dgn-08 HOUFILE023 \hcivil\cf0130\ 2/10/2005

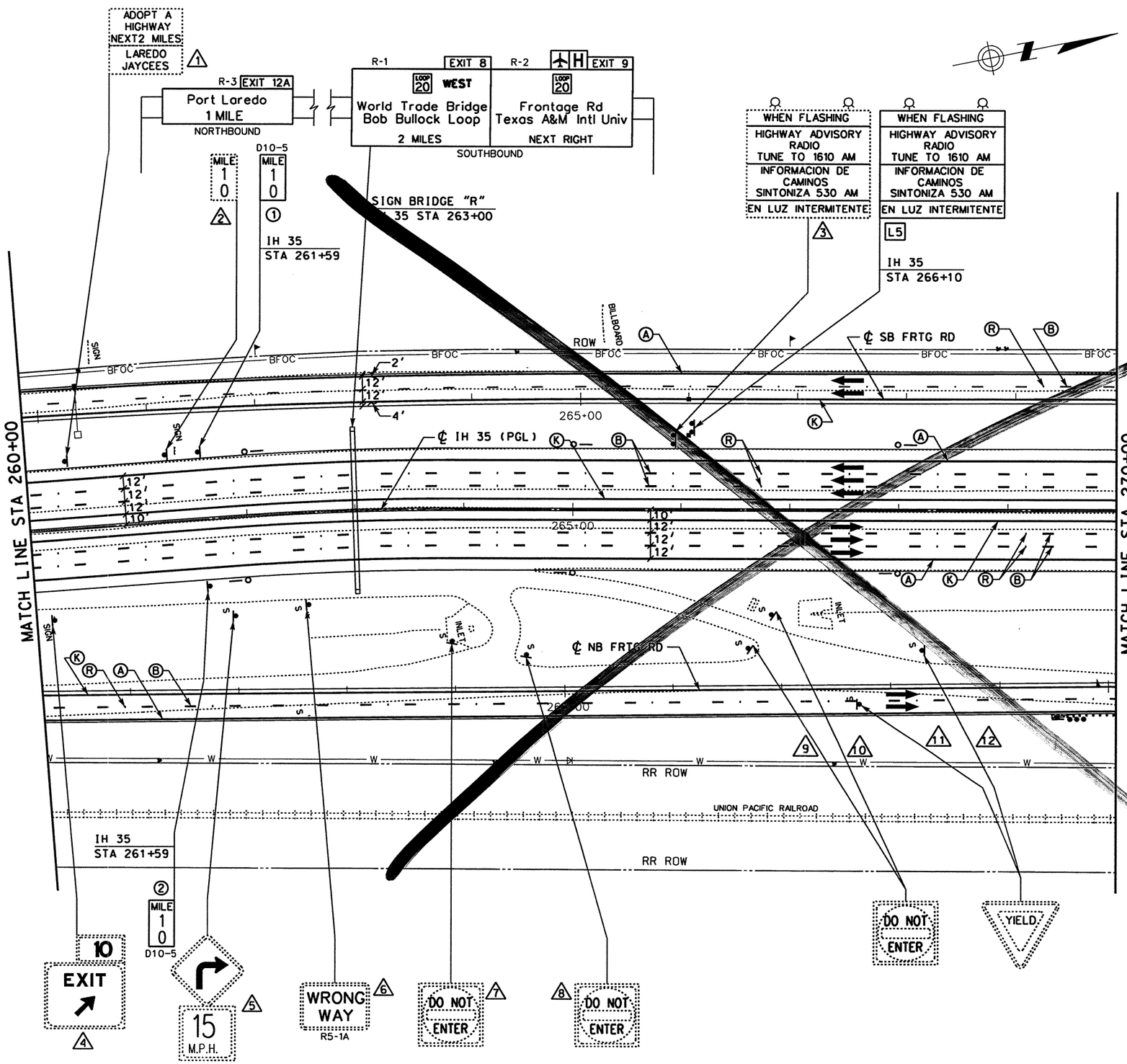

STRIPING LEGEND

- (A) REFL PAV MRK TY I & II (W)(SLD)(4")
- (B) REFL PAV MRK TY I & II (W)(BRK)(4")
- (C) REFL PAV MRK TY I & II (W)(SLD)(8")
- (D) REFL PAV MRK TY I & II (W)(DOT)(4")
- (E) REFL PAV MRK TY I & II (W)(SLD)(12")
- (F) REFL PAV MRK TY I & II (W)(SLD)(24")
- (L) REFL PAV MRK TY I & II (W)(LNDP)(12")
- (G) REFL PAV MRK TY I & II (W)(ARROW)
- (H) REFL PAV MRK TY I & II (W)(DBL ARROW)
- (T) REFL PAV MRK TY I & II (W)(TND ARROW)
- (I) REFL PAV MRK TY I & II (W)(WORD)
- (J) REFL PAV MRK TY I & II (W)(ENT GORE)
- (K) REFL PAV MRK TY I & II (Y)(SLD)(4")
- (M) REFL PAV MRK TY I & II (Y)(SLD)(8")
- (N) REFL PAV MRK TY I & II (Y)(SLD)(12")
- (S) REFL PAV MRK TY I & II (Y)(SLD)(24")
- (Q) RAIS PAV MRKR CL B (REFL) TY I-A
- (R) RAIS PAV MRKR CL B (REFL) TY II-C-R
- (O) RAIS PAV MRKR CL B (REFL) TY II-A-A

SIGNING AND DELINEATION LEGEND

- TRAFFIC FLOW ARROWS (PROPOSED)
- TRAFFIC FLOW ARROWS (EXISTING)
- (#) SMALL SIGN TO BE INSTALLED ITEM (644)
- (E) SIGN TO REMAIN IN PLACE
- (#) SIGN TO BE REMOVED ITEM (649)
- (#) SIGN TO BE RELOCATED (ITEM 649)
- L# LARGE SIGN TO BE INSTALLED
- SIGN POST FOR SMALL SIGN
- DOUBLE POSTED SIGN
- SIGN POST, BACK TO BACK SMALL SIGNS
- "K" MARKER
- DELINEATOR (D-SW) (A)
- DELINEATOR (D-SY) (A)
- DELINEATOR (D-DW) (A)
- OBJECT MARKER (OM-2VP)
- OBJECT MARKER (OM-2SR)
- OBJECT MARKER (OB-3B)

0 50 100
SCALE: 1" = 100'

STATE OF TEXAS
SIDNEY S. AFONSO
88055
REGISTERED PROFESSIONAL ENGINEER

THE SEAL APPEARING ON THIS DOCUMENT WAS AUTHORIZED BY SIDNEY S. AFONSO PE 88055, ON MAY 07, 2003

KBR
Engineered by KBR Technical Services, Inc

©2003 Texas Department of Transportation

IH 35
LOOP 20 TO UNIROYAL ROAD
SIGNING AND PAVEMENT MARKINGS
STA 260+00 TO
STA 270+00

SHEET 14 OF 33

FED RD DIV NO	FEDERAL AID PROJECT NO		SHEET NO
6	NH-2002 (79)		783
STATE	STATE DIST		COUNTY
TEXAS	LAREDO		WEBB
CONT	SECT	JOB	HIGHWAY NO
0018	05	062, ETC	IH 35

REF FILE(S): j0110p01.bdr, bdr LV ON = 14,31,45,50,57,58,60-62
j0110p01.alg, alg LV ON = 1-6,35-39
j0110p01.bck, bck LV ON = 2,9,10,14,17,20,21,25,28
j0110p01.eop, eop LV ON = 1-17,19-63
j0110p01.uti, uti LV ON = 1-63
j0110p01.spm, spm LV ON = 1-63
milpoint.row, row LV ON = 1-22,24-63

b22lop11.dgn-07 HOUFILE023 \hcivil\cf0130\ 5/8/2003

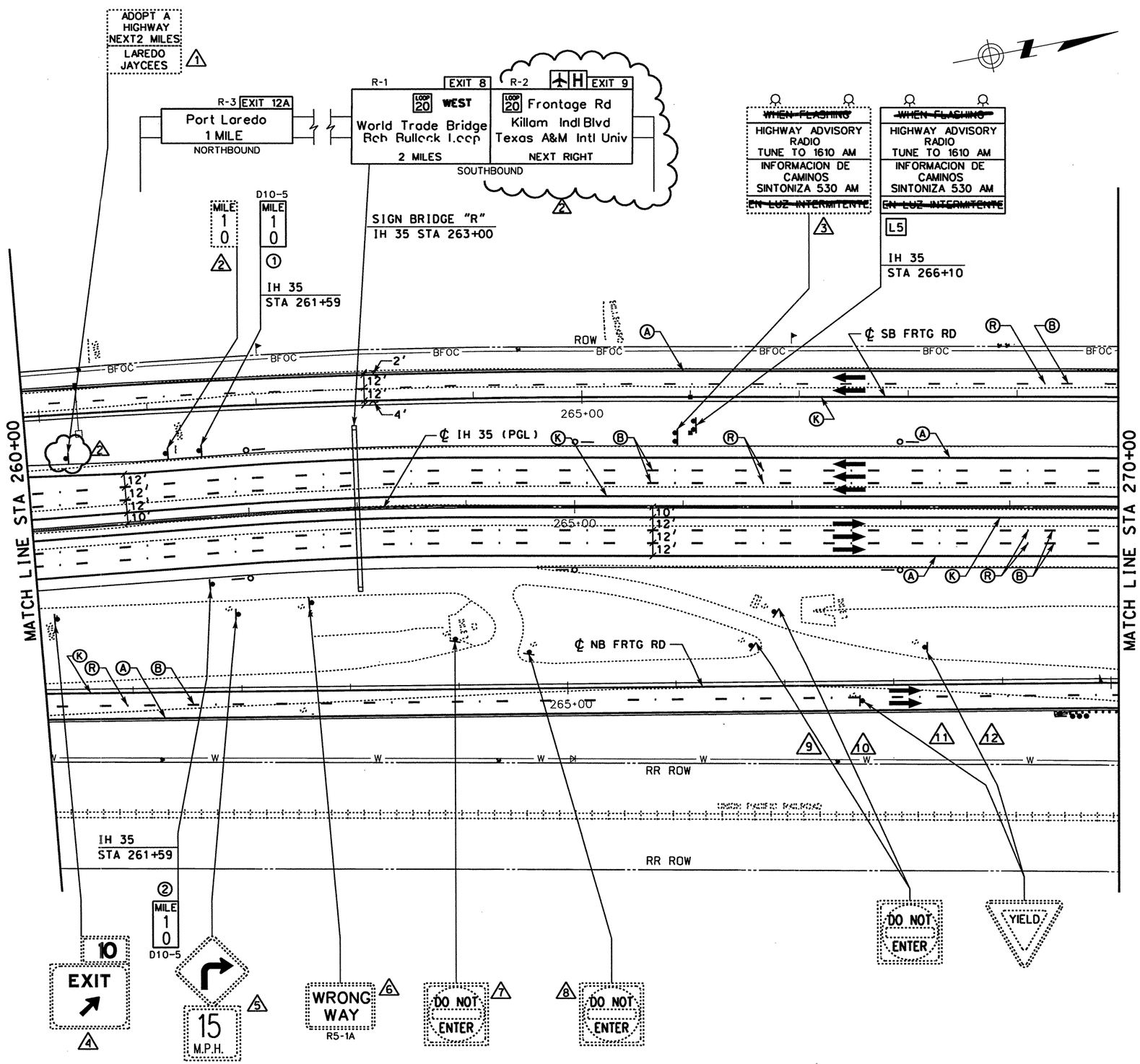

STRIPING LEGEND

- (A) REFL PAV MRK TY I & II (W)(SLD)(4")
- (B) REFL PAV MRK TY I & II (W)(BRK)(4")
- (C) REFL PAV MRK TY I & II (W)(SLD)(8")
- (D) REFL PAV MRK TY I & II (W)(DOT)(4")
- (E) REFL PAV MRK TY I & II (W)(SLD)(12")
- (F) REFL PAV MRK TY I & II (W)(SLD)(24")
- (L) REFL PAV MRK TY I & II (W)(LNDP)(12")
- (G) REFL PAV MRK TY I & II (W)(ARROW)
- (H) REFL PAV MRK TY I & II (W)(DBL ARROW)
- (T) REFL PAV MRK TY I & II (W)(TND ARROW)
- (I) REFL PAV MRK TY I & II (W)(WORD)
- (J) REFL PAV MRK TY I & II (W)(ENT GORE)
- (K) REFL PAV MRK TY I & II (Y)(SLD)(4")
- (M) REFL PAV MRK TY I & II (Y)(SLD)(8")
- (N) REFL PAV MRK TY I & II (Y)(SLD)(12")
- (S) REFL PAV MRK TY I & II (Y)(SLD)(24")
- (O) RAIS PAV MRKR CL B (REFL) TY I-A
- (R) RAIS PAV MRKR CL B (REFL) TY II-C-R
- (Q) RAIS PAV MRKR CL B (REFL) TY II-A-A

SIGNING AND DELINEATION LEGEND

- TRAFFIC FLOW ARROWS ~~(PROPOSED)~~
- TRAFFIC FLOW ARROWS (EXISTING)
- (#) SMALL SIGN TO BE INSTALLED ITEM (644)
- (E) SIGN TO REMAIN IN PLACE
- (#) SIGN TO BE REMOVED ITEM (649)
- (#) SIGN TO BE RELOCATED (ITEM 649)
- [L#] LARGE SIGN TO BE INSTALLED
- SIGN POST FOR SMALL SIGN
- DOUBLE POSTED SIGN
- SIGN POST. BACK TO BACK SMALL SIGNS
- "K" MARKER
- DELINEATOR (D-SW) (A)
- DELINEATOR (D-SY) (A)
- DELINEATOR (D-DW) (A)
- OBJECT MARKER (OM-2VP)
- OBJECT MARKER (OM-2SR)
- OBJECT MARKER (OB-3B)

0 50 100
SCALE: 1" = 100'

STATE OF TEXAS
SIDNEY S. AFONSO
88055
REGISTERED PROFESSIONAL ENGINEER

THE SEAL APPEARING ON THIS DOCUMENT WAS AUTHORIZED BY SIDNEY S. AFONSO PE 88055, ON FEBRUARY 10, 2005

Sidney Afonso

KBR

Engineered by KBR Technical Services, Inc

©2004 Texas Department of Transportation

IH 35
LOOP 20 TO UNIROYAL ROAD
SIGNING AND PAVEMENT MARKINGS
STA 260+00 TO STA 270+00

SHEET 14 OF 33

FED RD DIV NO	FEDERAL AID PROJECT NO		SHEET NO
6	NH-2002 (79)		783
STATE	STATE DIST		COUNTY
TEXAS	LAREDO		WEBB
CONT	SECT	JOB	HIGHWAY NO
0018	05	062, ETC	IH 35

DATE	BY	REV	REVISION
11/30/04	AA	2	ADD AUXILIARY LANE

REF FILE(S): j01lop01.bdr, bdr LV ON = 14.31.45.50.57.58.60-62
j01lop01.alg, alg LV ON = 1-6.35-39
j01lop01.bck, bck LV ON = 2.9.10.14.17.20.21.25.28
j01lop01.eop, eop LV ON = 1-17.19-63
j01lop01.utl, utl LV ON = 1-63
j01lop01.spm, spm LV ON = 1-63
miloint.row, row LV ON = 1-22.24-63

b22lop1.dgn-07 HOUFILE023 \hcivil\cf0130\ 2/10/2005

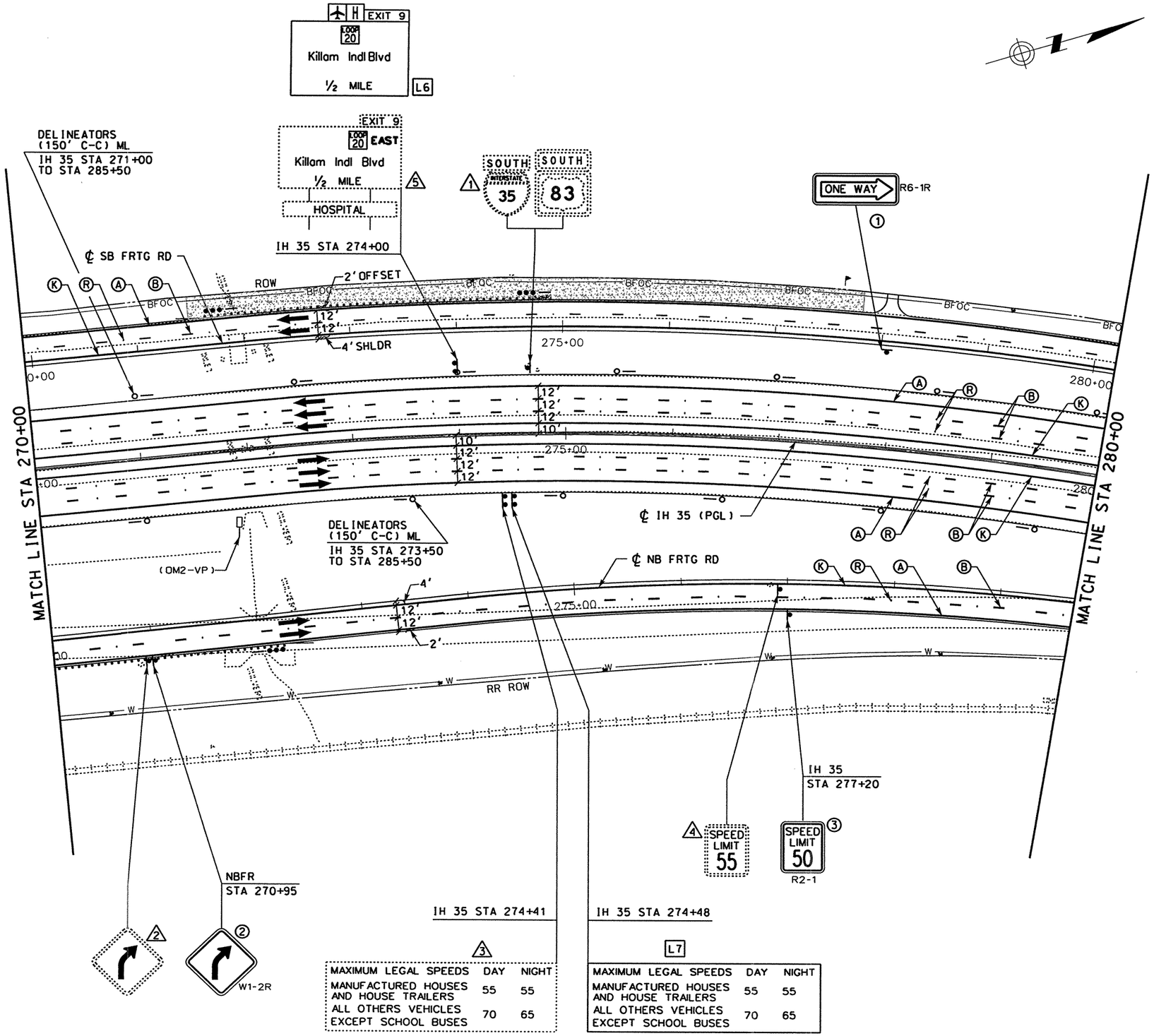

MAXIMUM LEGAL SPEEDS	DAY	NIGHT
MANUFACTURED HOUSES AND HOUSE TRAILERS	55	55
ALL OTHERS VEHICLES EXCEPT SCHOOL BUSES	70	65

MAXIMUM LEGAL SPEEDS	DAY	NIGHT
MANUFACTURED HOUSES AND HOUSE TRAILERS	55	55
ALL OTHERS VEHICLES EXCEPT SCHOOL BUSES	70	65

STRIPING LEGEND

- (A) REFL PAV MRK TY I & II (W)(SLD)(4")
- (B) REFL PAV MRK TY I & II (W)(BRK)(4")
- (C) REFL PAV MRK TY I & II (W)(SLD)(8")
- (D) REFL PAV MRK TY I & II (W)(DOT)(4")
- (E) REFL PAV MRK TY I & II (W)(SLD)(12")
- (F) REFL PAV MRK TY I & II (W)(SLD)(24")
- (L) REFL PAV MRK TY I & II (W)(LNDP)(12")
- (G) REFL PAV MRK TY I & II (W)(ARROW)
- (H) REFL PAV MRK TY I & II (W)(DBL ARROW)
- (T) REFL PAV MRK TY I & II (W)(TND ARROW)
- (I) REFL PAV MRK TY I & II (W)(WORD)
- (J) REFL PAV MRK TY I & II (W)(ENT GORE)
- (K) REFL PAV MRK TY I & II (Y)(SLD)(4")
- (M) REFL PAV MRK TY I & II (Y)(SLD)(8")
- (N) REFL PAV MRK TY I & II (Y)(SLD)(12")
- (S) REFL PAV MRK TY I & II (Y)(SLD)(24")
- (O) RAIS PAV MRKR CL B (REFL) TY I-A
- (R) RAIS PAV MRKR CL B (REFL) TY II-C-R
- (Q) RAIS PAV MRKR CL B (REFL) TY II-A-A

SIGNING AND DELINEATION LEGEND

- TRAFFIC FLOW ARROWS ~~(PROPOSED)~~
- TRAFFIC FLOW ARROWS (EXISTING)
- (#) SMALL SIGN TO BE INSTALLED ITEM (644)
- (E) SIGN TO REMAIN IN PLACE
- (#) SIGN TO BE REMOVED ITEM (649)
- (#) SIGN TO BE RELOCATED (ITEM 649)
- L# LARGE SIGN TO BE INSTALLED
- SIGN POST FOR SMALL SIGN
- DOUBLE POSTED SIGN
- SIGN POST, BACK TO BACK SMALL SIGNS
- "K" MARKER
- DELINEATOR (D-SW) (A)
- DELINEATOR (D-SY) (A)
- DELINEATOR (D-DW) (A)
- OBJECT MARKER (OM-2VP)
- OBJECT MARKER (OM-2SR)
- OBJECT MARKER (OB-3B)

0 50 100
SCALE: 1" = 100'

STATE OF TEXAS
SIDNEY S. AFONSO
88055
REGISTERED PROFESSIONAL ENGINEER

THE SEAL APPEARING ON THIS DOCUMENT WAS AUTHORIZED BY SIDNEY S. AFONSO PE 88055, ON MAY 30, 2003

KBR
Engineered by KBR Technical Services, Inc

©2003 Texas Department of Transportation

IH 35
LOOP 20 TO UNIROYAL ROAD
SIGNING AND PAVEMENT MARKINGS
STA 270+00 TO STA 280+00
SHEET 15 OF 33

FED RD DIV NO	FEDERAL AID PROJECT NO		SHEET NO
6	NH-2002 (79)		784
STATE	STATE DIST		COUNTY
TEXAS	LAREDO		WEBB
CONT	SECT	JOB	HIGHWAY NO
0018	05	062, ETC	IH 35

j01lop01.uti, uti LV ON = 1-63
j01lop01.eop, eop LV ON = 1-17,19-63
j01lop01.bck, bck LV ON = 2,9,10,14,17,20,21,25,28
j01lop01.alg, alg LV ON = 1-6,35-39 j01lop01.spm, spm LV ON = 1-63
REF FILE(S): j01lop01.bdr, bdr LV ON = 14,31,45,50,57,58,60-62, row LV ON = 1-22,24-63
b22lop12.dgn-14 HOUFILE023 \hcivil\cf0138X2/2003

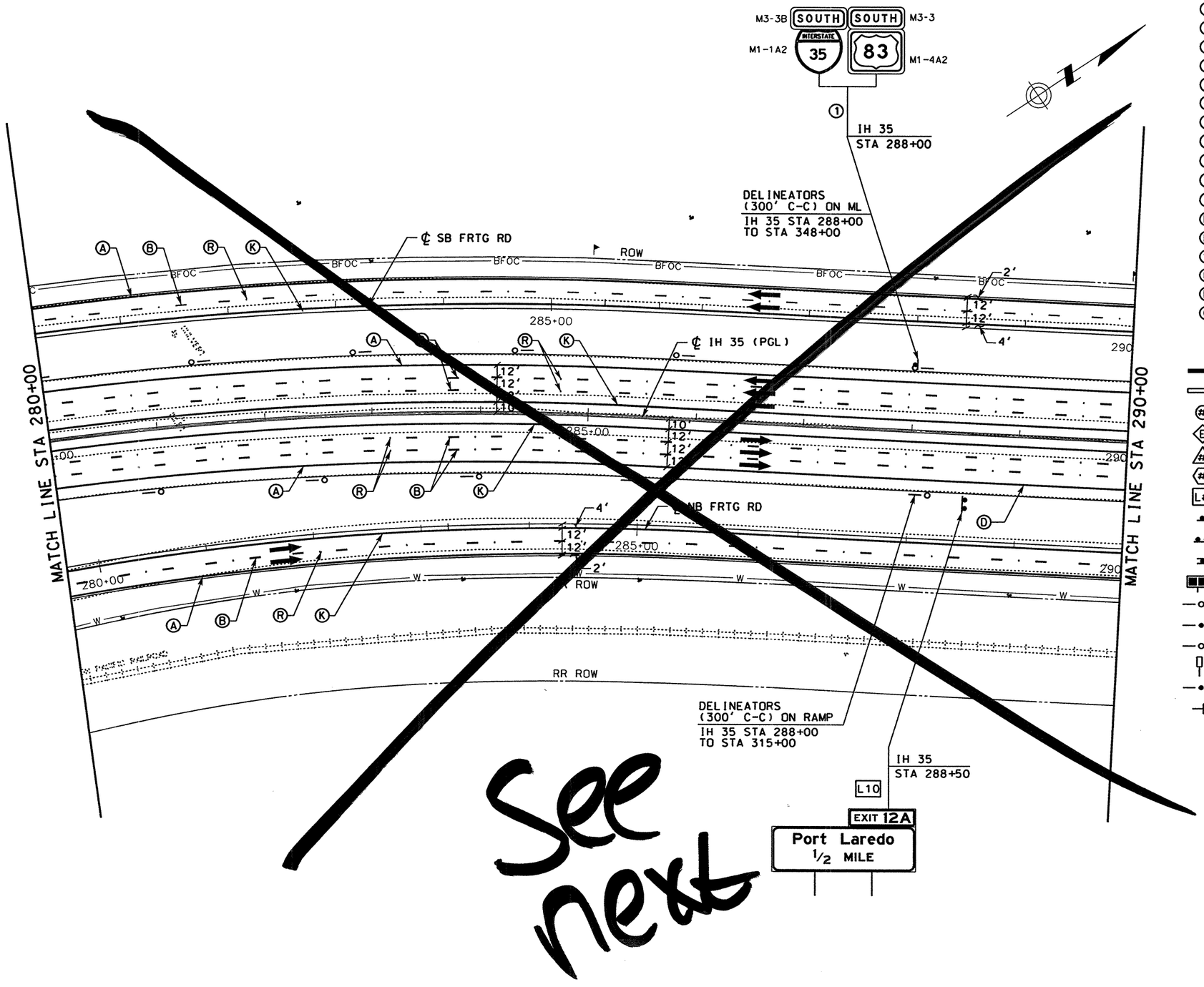

STRIPING LEGEND

- (A) REFL PAV MRK TY I & II (W)(SLD)(4")
- (B) REFL PAV MRK TY I & II (W)(BRK)(4")
- (C) REFL PAV MRK TY I & II (W)(SLD)(8")
- (D) REFL PAV MRK TY I & II (W)(DOT)(4")
- (E) REFL PAV MRK TY I & II (W)(SLD)(12")
- (F) REFL PAV MRK TY I & II (W)(SLD)(24")
- (L) REFL PAV MRK TY I & II (W)(LNDP)(12")
- (G) REFL PAV MRK TY I & II (W)(ARROW)
- (H) REFL PAV MRK TY I & II (W)(DBL ARROW)
- (T) REFL PAV MRK TY I & II (W)(TND ARROW)
- (I) REFL PAV MRK TY I & II (W)(WORD)
- (J) REFL PAV MRK TY I & II (W)(ENT GORE)
- (K) REFL PAV MRK TY I & II (Y)(SLD)(4")
- (M) REFL PAV MRK TY I & II (Y)(SLD)(8")
- (N) REFL PAV MRK TY I & II (Y)(SLD)(12")
- (S) REFL PAV MRK TY I & II (Y)(SLD)(24")
- (D) RAIS PAV MRKR CL B (REFL) TY I-A
- (R) RAIS PAV MRKR CL B (REFL) TY II-C-R
- (O) RAIS PAV MRKR CL B (REFL) TY II-A-A

SIGNING AND DELINEATION LEGEND

- TRAFFIC FLOW ARROWS (PROPOSED)
- TRAFFIC FLOW ARROWS (EXISTING)
- (#) SMALL SIGN TO BE INSTALLED ITEM (644)
- (E) SIGN TO REMAIN IN PLACE
- (#) SIGN TO BE REMOVED ITEM (649)
- (#) SIGN TO BE RELOCATED (ITEM 649)
- [L#] LARGE SIGN TO BE INSTALLED
- SIGN POST FOR SMALL SIGN
- DOUBLE POSTED SIGN
- SIGN POST, BACK TO BACK SMALL SIGNS
- "K" MARKER
- DELINEATOR (D-SW) (A)
- DELINEATOR (D-SY) (A)
- DELINEATOR (D-DW) (A)
- OBJECT MARKER (OM-2VP)
- OBJECT MARKER (OM-2SR)
- OBJECT MARKER (OB-3B)

0 50 100
SCALE: 1" = 100'

STATE OF TEXAS
SIDNEY S. AFONSO
88055
REGISTERED PROFESSIONAL ENGINEER

THE SEAL APPEARING ON THIS DOCUMENT WAS AUTHORIZED BY SIDNEY S. AFONSO PE 88055, ON MAY 30, 2003

KBR
Engineered by KBR Technical Services, Inc

©2003 Texas Department of Transportation

IH 35
LOOP 20 TO UNIROYAL ROAD
SIGNING AND PAVEMENT MARKINGS
STA 280+00 TO STA 290+00

SHEET 16 OF 33

FED RD DIV NO	FEDERAL AID PROJECT NO		SHEET NO
6	NH-2002 (79)		785
STATE	STATE DIST		COUNTY
TEXAS	LAREDO		WEBB
CONT	SECT	JOB	HIGHWAY NO
0018	05	062, ETC	IH 35

REF FILE(S): j011op01.bdr, bdr LV ON = 14,31,45,50,57,58,60-62
j011op01.olg, olg LV ON = 1-6,35-39
j011op01.bck, bck LV ON = 2,9,10,14,17,20,21,25,28
j011op01.eop, eop LV ON = 1-17,19-63
j011op01.uti, uti LV ON = 1-63
j011op01.row, row LV ON = 1-22,24-63
miloint.spm, spm
b22lop13.dgn-06 HOUFILE023 \hcivil\cf0130\ 6/2/2003

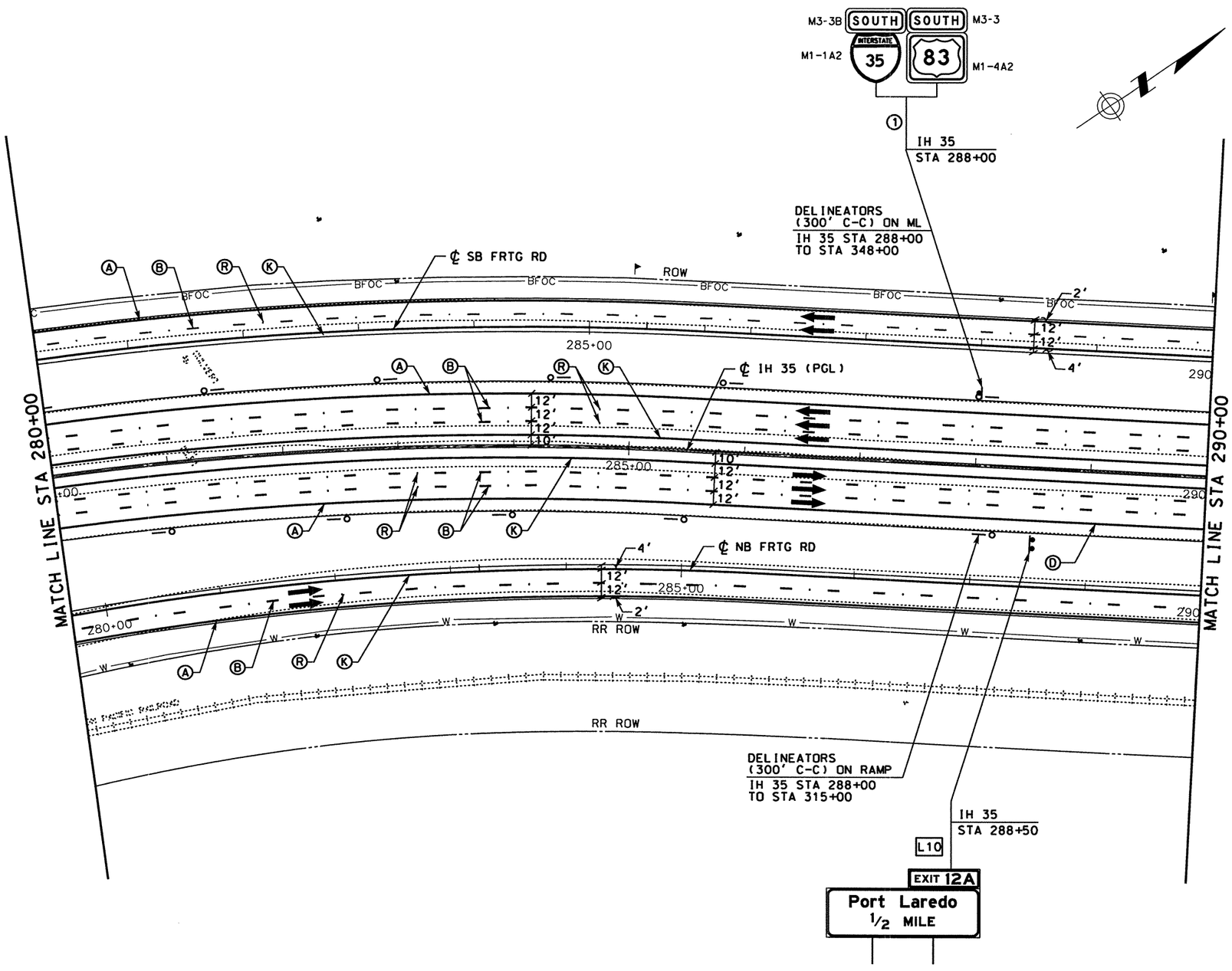

STRIPING LEGEND

- (A) REFL PAV MRK TY I & II (W)(SLD)(4")
- (B) REFL PAV MRK TY I & II (W)(BRK)(4")
- (C) REFL PAV MRK TY I & II (W)(SLD)(8")
- (D) REFL PAV MRK TY I & II (W)(DOT)(4")
- (E) REFL PAV MRK TY I & II (W)(SLD)(12")
- (F) REFL PAV MRK TY I & II (W)(SLD)(24")
- (L) REFL PAV MRK TY I & II (W)(LNDP)(12")
- (G) REFL PAV MRK TY I & II (W)(ARROW)
- (H) REFL PAV MRK TY I & II (W)(DBL ARROW)
- (T) REFL PAV MRK TY I & II (W)(TND ARROW)
- (I) REFL PAV MRK TY I & II (W)(WORD)
- (J) REFL PAV MRK TY I & II (W)(ENT GORE)
- (K) REFL PAV MRK TY I & II (Y)(SLD)(4")
- (M) REFL PAV MRK TY I & II (Y)(SLD)(8")
- (N) REFL PAV MRK TY I & II (Y)(SLD)(12")
- (S) REFL PAV MRK TY I & II (Y)(SLD)(24")
- (O) RAIS PAV MRKR CL B (REFL) TY I-A
- (R) RAIS PAV MRKR CL B (REFL) TY II-C-R
- (Q) RAIS PAV MRKR CL B (REFL) TY II-A-A

SIGNING AND DELINEATION LEGEND

- TRAFFIC FLOW ARROWS ~~(PROPOSED)~~
- TRAFFIC FLOW ARROWS (EXISTING)
- (#) SMALL SIGN TO BE INSTALLED ITEM (644)
- (E) SIGN TO REMAIN IN PLACE
- (#) SIGN TO BE REMOVED ITEM (649)
- (#) SIGN TO BE RELOCATED (ITEM 649)
- [L#] LARGE SIGN TO BE INSTALLED
- SIGN POST FOR SMALL SIGN
- DOUBLE POSTED SIGN
- SIGN POST, BACK TO BACK SMALL SIGNS
- "K" MARKER
- DELINEATOR (D-SW) (A)
- DELINEATOR (D-SY) (A)
- DELINEATOR (D-DW) (A)
- OBJECT MARKER (OM-2VP)
- OBJECT MARKER (OM-2SR)
- OBJECT MARKER (OB-3B)

0 50 100
SCALE: 1" = 100'

STATE OF TEXAS
SIDNEY S. AFONSO
PE 88055
REGISTERED PROFESSIONAL ENGINEER

THE SEAL APPEARING ON THIS DOCUMENT WAS AUTHORIZED BY SIDNEY S. AFONSO PE 88055, ON MARCH 05, 2004

KBR
Engineered by KBR Technical Services, Inc

©2003 Texas Department of Transportation

IH 35
LOOP 20 TO UNIROYAL ROAD
SIGNING AND PAVEMENT MARKINGS
STA 280+00 TO
STA 290+00

SHEET 16 OF 33

FED RD DIV NO	FEDERAL AID PROJECT NO		SHEET NO
6	NH-2002 (79)		785
STATE	STATE DIST		COUNTY
TEXAS	LAREDO		WEBB
CONT	SECT	JOB	HIGHWAY NO
0018	05	062, ETC	IH 35

DATE	BY	REV	REVISION
02/17/04	AA	1	MAINLANE SHLDR WIDEN REV EDGE OF PAVEMENT AND PAVEMENT LIMITS

REF FILE(S): j011op01.bdr, bdr LV ON = 14,31,45,50,57,58,60-62
j011op01.alg, alg LV ON = 1-6,35-39
j011op01.bck, bck LV ON = 2,9,10,14,17,20,21,25,28
j011op01.eop, eop LV ON = 1-17,19-63
j011op01.uti, uti LV ON = 1-63
j011op01.spm, spm LV ON = 1-22,24-63
miloint.row, row

b22lop13.dgn-06 HOUFILE023 \hcivil\cf0130\ 3/4/2004

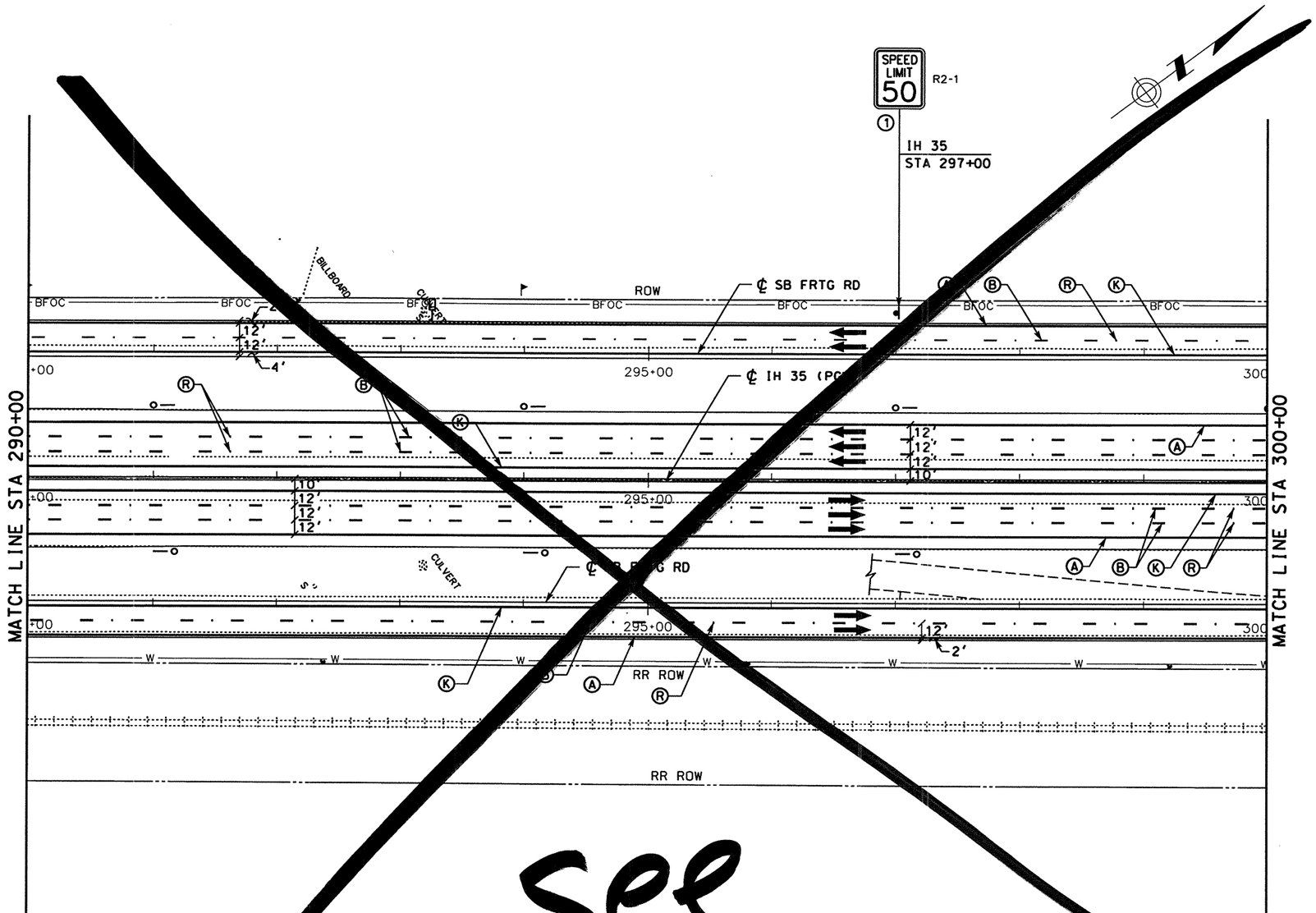

See next

STRIPING LEGEND

- (A) REFL PAV MRK TY I & II (W)(SLD)(4")
- (B) REFL PAV MRK TY I & II (W)(BRK)(4")
- (C) REFL PAV MRK TY I & II (W)(SLD)(8")
- (D) REFL PAV MRK TY I & II (W)(DOT)(4")
- (E) REFL PAV MRK TY I & II (W)(SLD)(12")
- (F) REFL PAV MRK TY I & II (W)(SLD)(24")
- (L) REFL PAV MRK TY I & II (W)(LNDP)(12")
- (G) REFL PAV MRK TY I & II (W)(ARROW)
- (H) REFL PAV MRK TY I & II (W)(DBL ARROW)
- (T) REFL PAV MRK TY I & II (W)(TND ARROW)
- (I) REFL PAV MRK TY I & II (W)(WORD)
- (J) REFL PAV MRK TY I & II (W)(ENT GORE)
- (K) REFL PAV MRK TY I & II (Y)(SLD)(4")
- (M) REFL PAV MRK TY I & II (Y)(SLD)(8")
- (N) REFL PAV MRK TY I & II (Y)(SLD)(12")
- (S) REFL PAV MRK TY I & II (Y)(SLD)(24")
- (O) RAIS PAV MRKR CL B (REFL) TY I-A
- (R) RAIS PAV MRKR CL B (REFL) TY II-C-R
- (O) RAIS PAV MRKR CL B (REFL) TY II-A-A

SIGNING AND DELINEATION LEGEND

- TRAFFIC FLOW ARROWS (PROPOSED)
- TRAFFIC FLOW ARROWS (EXISTING)
- (#) SMALL SIGN TO BE INSTALLED ITEM (644)
- (E) SIGN TO REMAIN IN PLACE
- (#) SIGN TO BE REMOVED ITEM (649)
- (#) SIGN TO BE RELOCATED (ITEM 649)
- [L#] LARGE SIGN TO BE INSTALLED
- SIGN POST FOR SMALL SIGN
- DOUBLE POSTED SIGN
- SIGN POST, BACK TO BACK SMALL SIGNS
- "K" MARKER
- DELINEATOR (D-SW) (A)
- DELINEATOR (D-SY) (A)
- DELINEATOR (D-DW) (A)
- OBJECT MARKER (OM-2VP)
- OBJECT MARKER (OM-2SR)
- OBJECT MARKER (OB-3B)

0 50 100
SCALE: 1" = 100'

STATE OF TEXAS
SIDNEY S. AFONSO
88055
REGISTERED PROFESSIONAL ENGINEER

THE SEAL APPEARING ON THIS DOCUMENT WAS AUTHORIZED BY SIDNEY S. AFONSO PE 88055, ON MAY 07, 2003

Sidney S. Afonso

KBR
Engineered by KBR Technical Services, Inc

©2003 Texas Department of Transportation

IH 35
LOOP 20 TO UNIROYAL ROAD
SIGNING AND PAVEMENT MARKINGS
STA 290+00 TO STA 300+00

SHEET 17 OF 33

FED RD DIV NO	FEDERAL AID PROJECT NO		SHEET NO
6	NH-2002 (79)		786
STATE	STATE DIST		COUNTY
TEXAS	LAREDO		WEBB
CONT	SECT	JOB	HIGHWAY NO
0018	05	062, ETC	IH 35

5/8/2003

HOUFILE023 \hcivil\cf0130\

b22lop14.dgn-13

REF FILE(S): j011op01.bdr, bdr LV ON = 14,31,45,50,57,58,60-62
j011op01.alg, alg LV ON = 1-6,35-39
j011op01.bck, bck LV ON = 2,9,10,14,17,20,21,25,28
j011op01.eop, eop LV ON = 1-17,19-63
j011op01.uti, uti LV ON = 1-63

j011op01.row, row LV ON = 1-22,24-63
j011op01.spm, spm LV ON = 1-63
milpoint

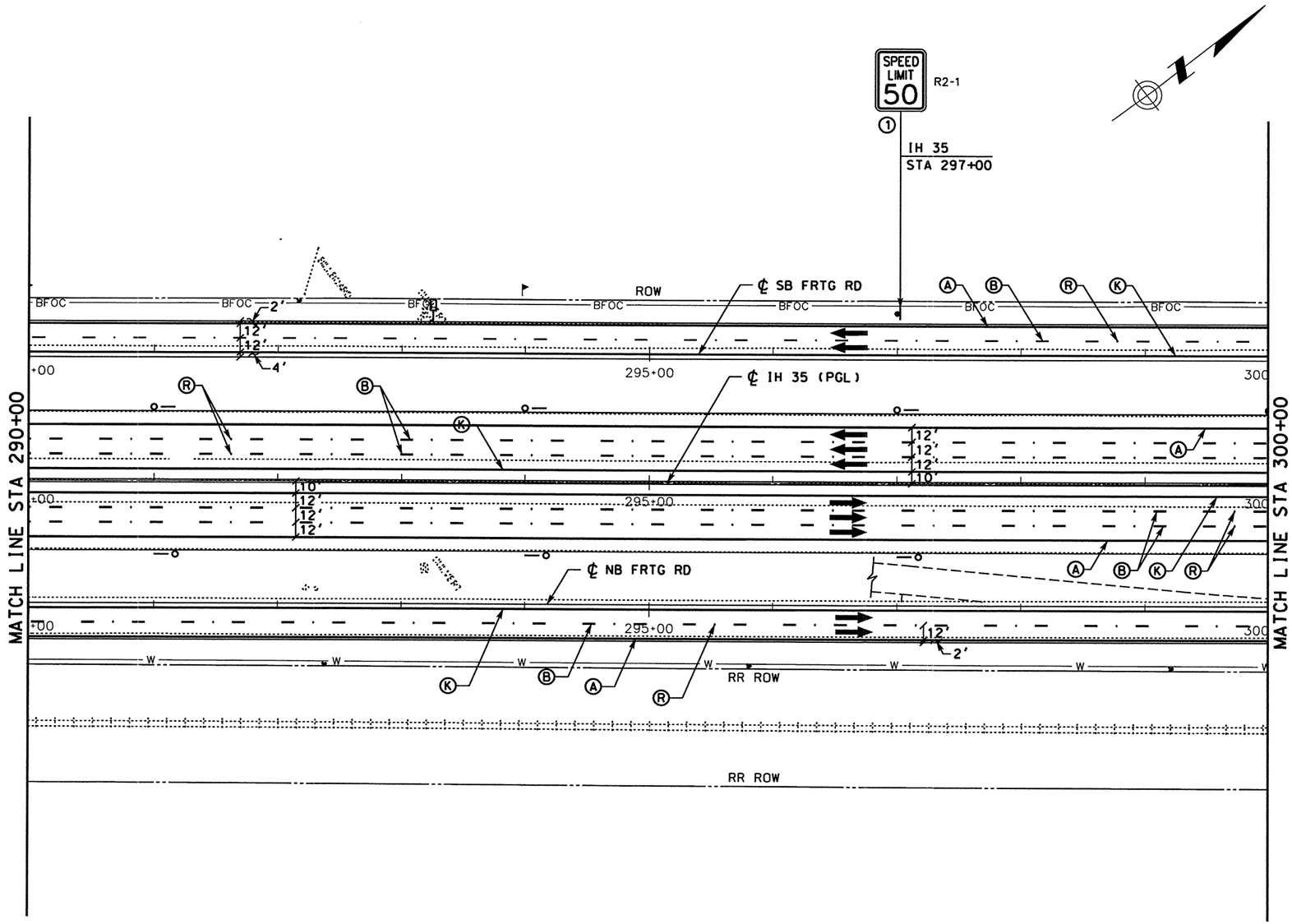

STRIPING LEGEND

- Ⓐ REFL PAV MRK TY I & II (W)(SLD)(4")
- Ⓑ REFL PAV MRK TY I & II (W)(BRK)(4")
- Ⓒ REFL PAV MRK TY I & II (W)(SLD)(8")
- Ⓓ REFL PAV MRK TY I & II (W)(DOT)(4")
- Ⓔ REFL PAV MRK TY I & II (W)(SLD)(12")
- Ⓕ REFL PAV MRK TY I & II (W)(SLD)(24")
- Ⓛ REFL PAV MRK TY I & II (W)(LNDP)(12")
- Ⓖ REFL PAV MRK TY I & II (W)(ARROW)
- Ⓗ REFL PAV MRK TY I & II (W)(DBL ARROW)
- Ⓣ REFL PAV MRK TY I & II (W)(TND ARROW)
- Ⓘ REFL PAV MRK TY I & II (W)(WORD)
- Ⓙ REFL PAV MRK TY I & II (W)(ENT GORE)
- Ⓚ REFL PAV MRK TY I & II (Y)(SLD)(4")
- Ⓜ REFL PAV MRK TY I & II (Y)(SLD)(8")
- Ⓝ REFL PAV MRK TY I & II (Y)(SLD)(12")
- Ⓢ REFL PAV MRK TY I & II (Y)(SLD)(24")
- Ⓓ RAIS PAV MRKR CL B (REFL) TY I-A
- Ⓡ RAIS PAV MRKR CL B (REFL) TY II-C-R
- Ⓞ RAIS PAV MRKR CL B (REFL) TY II-A-A

SIGNING AND DELINEATION LEGEND

- TRAFFIC FLOW ARROWS ~~(PROPOSED)~~
- TRAFFIC FLOW ARROWS (EXISTING)
- (#) SMALL SIGN TO BE INSTALLED ITEM (644)
- (E) SIGN TO REMAIN IN PLACE
- (#) SIGN TO BE REMOVED ITEM (649)
- (#) SIGN TO BE RELOCATED (ITEM 649)
- [L#] LARGE SIGN TO BE INSTALLED
- SIGN POST FOR SMALL SIGN
- DOUBLE POSTED SIGN
- SIGN POST, BACK TO BACK SMALL SIGNS
- "K" MARKER
- DELINEATOR (D-SW) (A)
- DELINEATOR (D-SY) (A)
- DELINEATOR (D-DW) (A)
- OBJECT MARKER (OM-2VP)
- OBJECT MARKER (OM-2SR)
- OBJECT MARKER (OB-3B)

0 50 100
SCALE: 1" = 100'

STATE OF TEXAS
SIDNEY S. AFONSO
88055
REGISTERED PROFESSIONAL ENGINEER

THE SEAL APPEARING ON THIS DOCUMENT WAS AUTHORIZED BY SIDNEY S. AFONSO PE 88055, ON MARCH 05, 2004

KBR
Engineered by KBR Technical Services, Inc

©2003 Texas Department of Transportation

IH 35
LOOP 20 TO UNIROYAL ROAD
SIGNING AND PAVEMENT MARKINGS
STA 290+00 TO
STA 300+00

SHEET 17 OF 33

FED RD DIV NO	FEDERAL AID PROJECT NO		SHEET NO
6	NH-2002 (79)		786
STATE	STATE DIST		COUNTY
TEXAS	LAREDO		WEBB
CONT	SECT	JOB	HIGHWAY NO
0018	05	062, ETC	IH 35

DATE	BY	REV	REVISION
02/17/04	AA	1	MAINLANE SHLDR WIDEN REV EDGE OF PAVEMENT AND PAVEMENT LIMITS

REF FILE(S): j011op01.uti, uti LV ON = 1-63
j011op01.eop, eop LV ON = 1-17,19-63
j011op01.bck, bck LV ON = 2,9,10,14,17,20,21,25,28
j011op01.alg, alg LV ON = 1-6,35-39
j011op01.bdr, bdr LV ON = 14,31,45,50,57,58,60-62
j011op01.spm, spm LV ON = 1-63
milointf.row, row LV ON = 1-22,24-63

3/4/2004
HOUFILE023 \hcivil\cf0130\
b22lop14.dgn-13

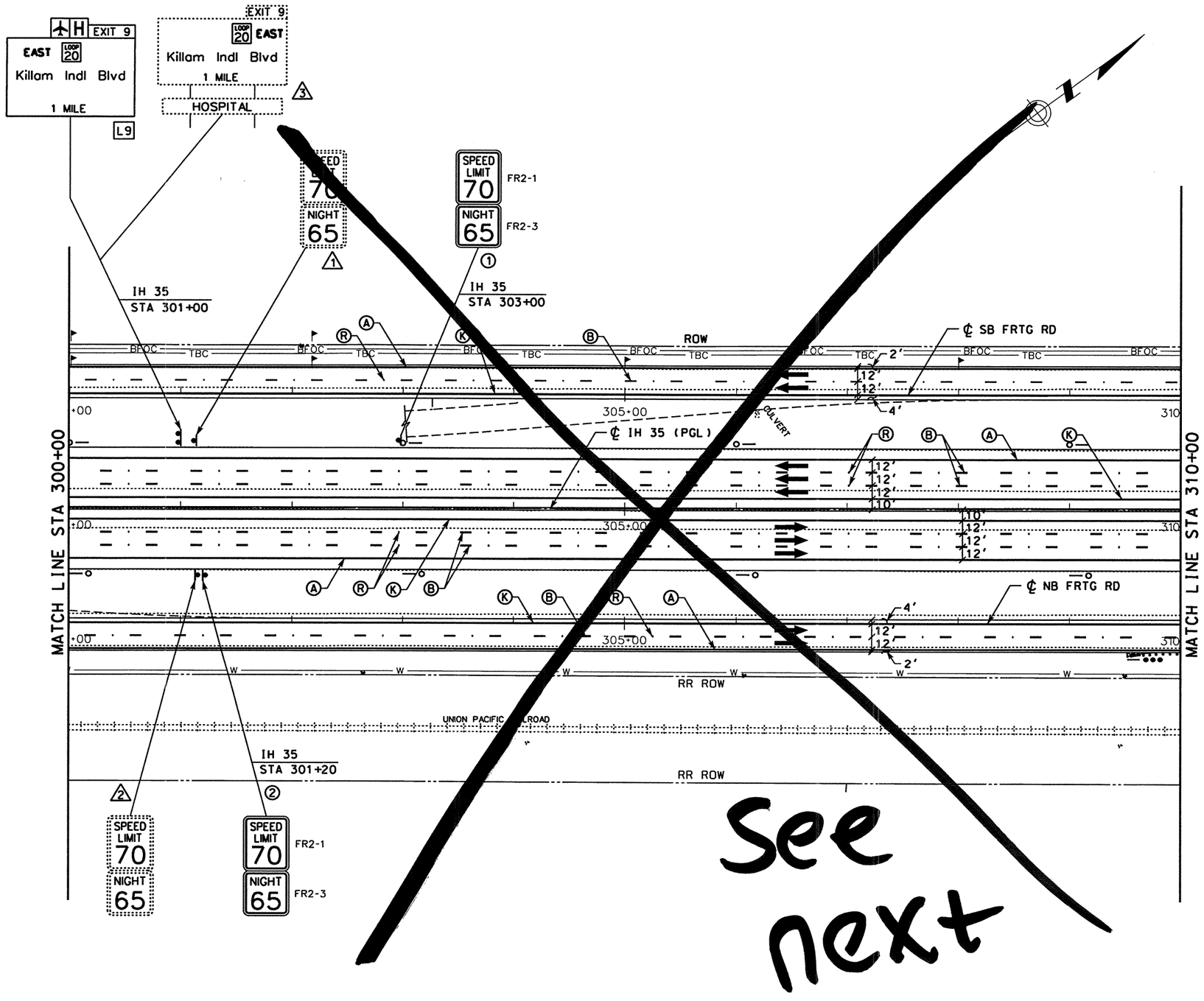

STRIPING LEGEND

- (A) REFL PAV MRK TY I & II (W)(SLD)(4")
- (B) REFL PAV MRK TY I & II (W)(BRK)(4")
- (C) REFL PAV MRK TY I & II (W)(SLD)(8")
- (D) REFL PAV MRK TY I & II (W)(DOT)(4")
- (E) REFL PAV MRK TY I & II (W)(SLD)(12")
- (F) REFL PAV MRK TY I & II (W)(SLD)(24")
- (L) REFL PAV MRK TY I & II (W)(LNDP)(12")
- (G) REFL PAV MRK TY I & II (W)(ARROW)
- (H) REFL PAV MRK TY I & II (W)(DBL ARROW)
- (T) REFL PAV MRK TY I & II (W)(TND ARROW)
- (I) REFL PAV MRK TY I & II (W)(WORD)
- (J) REFL PAV MRK TY I & II (W)(ENT GORE)
- (K) REFL PAV MRK TY I & II (Y)(SLD)(4")
- (M) REFL PAV MRK TY I & II (Y)(SLD)(8")
- (N) REFL PAV MRK TY I & II (Y)(SLD)(12")
- (S) REFL PAV MRK TY I & II (Y)(SLD)(24")
- (D) RAIS PAV MRKR CL B (REFL) TY I-A
- (R) RAIS PAV MRKR CL B (REFL) TY II-C-R
- (O) RAIS PAV MRKR CL B (REFL) TY II-A-A

SIGNING AND DELINEATION LEGEND

- TRAFFIC FLOW ARROWS (PROPOSED)
- TRAFFIC FLOW ARROWS (EXISTING)
- (#) SMALL SIGN TO BE INSTALLED ITEM (644)
- (E) SIGN TO REMAIN IN PLACE
- (#) SIGN TO BE REMOVED ITEM (649)
- (#) SIGN TO BE RELOCATED (ITEM 649)
- [L#] LARGE SIGN TO BE INSTALLED
- SIGN POST FOR SMALL SIGN
- DOUBLE POSTED SIGN
- SIGN POST, BACK TO BACK SMALL SIGNS
- "K" MARKER
- DELINEATOR (D-SW) (A)
- DELINEATOR (D-SY) (A)
- DELINEATOR (D-DW) (A)
- OBJECT MARKER (OM-2VP)
- OBJECT MARKER (OM-2SR)
- OBJECT MARKER (OB-3B)

0 50 100
SCALE: 1" = 100'

STATE OF TEXAS
SIDNEY S. AFONSO
88055
REGISTERED PROFESSIONAL ENGINEER

THE SEAL APPEARING ON THIS DOCUMENT WAS AUTHORIZED BY SIDNEY S. AFONSO PE 88055, ON MAY 07, 2003

KBR
Engineered by KBR Technical Services, Inc

©2003 Texas Department of Transportation

IH 35
LOOP 20 TO UNIROYAL ROAD
SIGNING AND PAVEMENT MARKINGS
STA 300+00 TO
STA 310+00

SHEET 18 OF 33

FED RD DIV NO	FEDERAL AID PROJECT NO		SHEET NO
6	NH-2002 (79)		787
STATE	STATE DIST		COUNTY
TEXAS	LAREDO		WEBB
CONT	SECT	JOB	HIGHWAY NO
0018	05	062, ETC	IH 35

REF FILE(S): j011op01.uti, uti LV ON = 1-63
j011op01.eop, eop LV ON = 1-17,19-63
j011op01.bck, bck LV ON = 2,9,10,14,17,20,21,25,28
j011op01.alg, alg LV ON = 1-6,35-39
j011op01.bdr, bdr LV ON = 14,31,45,50,57,58,60-62
j011op01.spm, spm LV ON = 1-63
milpoint.row, row LV ON = 1-22,24-63

5/8/2003
HOUFILE023 \hcivil\cf0130\
b22lop15.dgn-07

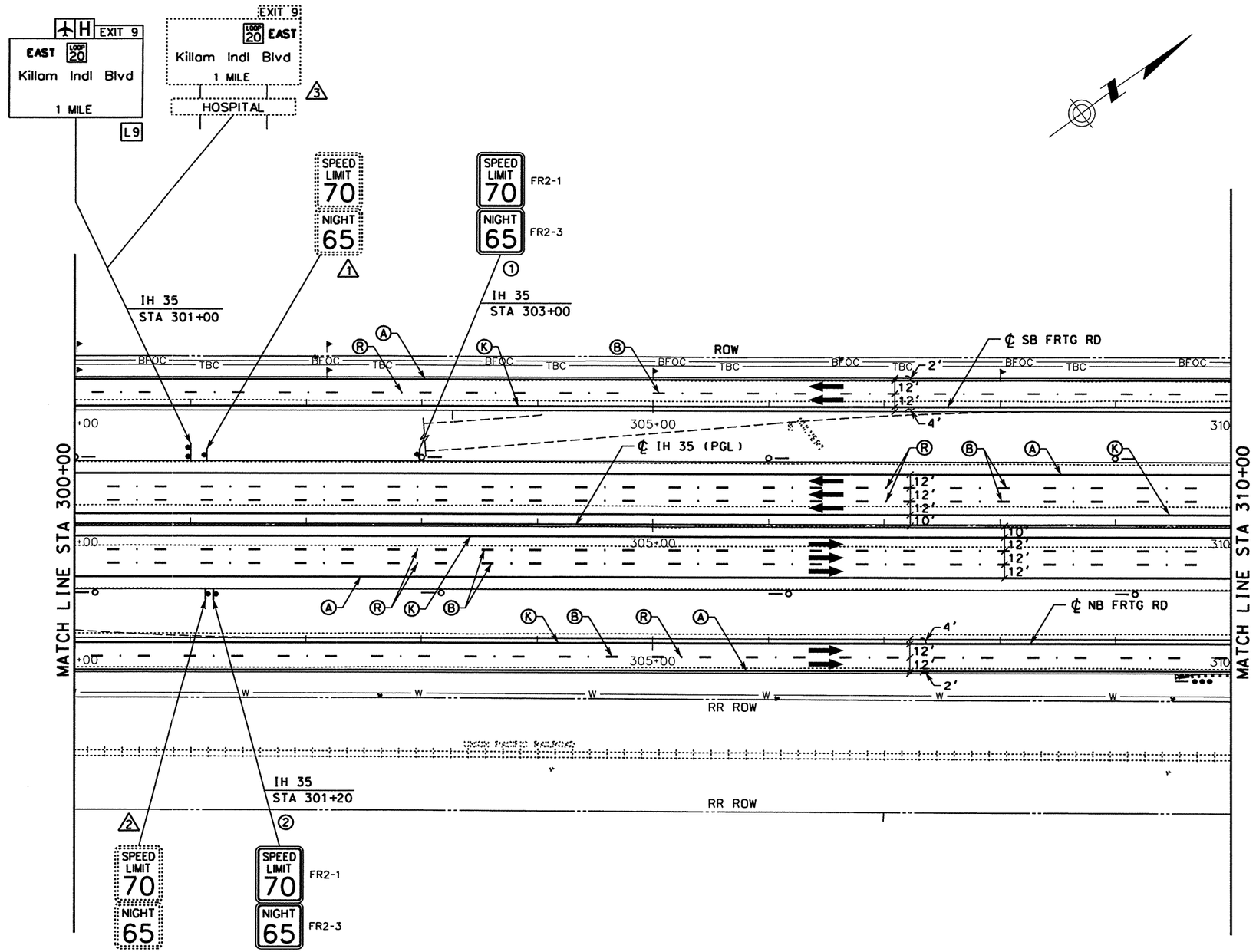

STRIPING LEGEND

- (A) REFL PAV MRK TY I & II (W)(SLD)(4")
- (B) REFL PAV MRK TY I & II (W)(BRK)(4")
- (C) REFL PAV MRK TY I & II (W)(SLD)(8")
- (D) REFL PAV MRK TY I & II (W)(DOT)(4")
- (E) REFL PAV MRK TY I & II (W)(SLD)(12")
- (F) REFL PAV MRK TY I & II (W)(SLD)(24")
- (L) REFL PAV MRK TY I & II (W)(LNDP)(12")
- (G) REFL PAV MRK TY I & II (W)(ARROW)
- (H) REFL PAV MRK TY I & II (W)(DBL ARROW)
- (T) REFL PAV MRK TY I & II (W)(TND ARROW)
- (I) REFL PAV MRK TY I & II (W)(WORD)
- (J) REFL PAV MRK TY I & II (W)(ENT GORE)
- (K) REFL PAV MRK TY I & II (Y)(SLD)(4")
- (M) REFL PAV MRK TY I & II (Y)(SLD)(8")
- (N) REFL PAV MRK TY I & II (Y)(SLD)(12")
- (S) REFL PAV MRK TY I & II (Y)(SLD)(24")
- (D) RAIS PAV MRKR CL B (REFL) TY I-A
- (R) RAIS PAV MRKR CL B (REFL) TY II-C-R
- (O) RAIS PAV MRKR CL B (REFL) TY II-A-A

SIGNING AND DELINEATION LEGEND

- TRAFFIC FLOW ARROWS ~~(PROPOSED)~~
- TRAFFIC FLOW ARROWS (EXISTING)
- (#) SMALL SIGN TO BE INSTALLED ITEM (644)
- (E) SIGN TO REMAIN IN PLACE
- (#) SIGN TO BE REMOVED ITEM (649)
- (#) SIGN TO BE RELOCATED (ITEM 649)
- L# LARGE SIGN TO BE INSTALLED
- SIGN POST FOR SMALL SIGN
- DOUBLE POSTED SIGN
- SIGN POST, BACK TO BACK SMALL SIGNS
- "K" MARKER
- DELINEATOR (D-SW) (A)
- DELINEATOR (D-SY) (A)
- DELINEATOR (D-DW) (A)
- OBJECT MARKER (OM-2VP)
- OBJECT MARKER (OM-2SR)
- OBJECT MARKER (OB-3B)

0 50 100
SCALE: 1" = 100'

STATE OF TEXAS
SIDNEY S. AFONSO
88055
REGISTERED PROFESSIONAL ENGINEER

THE SEAL APPEARING ON THIS DOCUMENT WAS AUTHORIZED BY SIDNEY S. AFONSO PE 88055, ON MARCH 05, 2004

KBR
Engineered by KBR Technical Services, Inc

©2003 Texas Department of Transportation

IH 35
LOOP 20 TO UNIROYAL ROAD
SIGNING AND PAVEMENT MARKINGS
STA 300+00 TO STA 310+00

SHEET 18 OF 33

FED RD DIV NO	FEDERAL AID PROJECT NO	SHEET NO
6	NH-2002 (79)	787

STATE	STATE DIST	COUNTY
TEXAS	LAREDO	WEBB

CONT	SECT	JOB	HIGHWAY NO
0018	05	062, ETC	IH 35

DATE	BY	REV	REVISION
02/17/04	AA	1	MAINLANE SHLDR WIDEN REV EDGE OF PAVEMENT AND PAVEMENT LIMITS

REF FILE(S): j01lop01.utl, utl LV ON = 1-63
j01lop01.eop, eop LV ON = 1-17,19-63
j01lop01.bck, bck LV ON = 2,9,10,14,17,20,21,25,28
j01lop01.alg, alg LV ON = 1-6,35-39
j01lop01.bdr, bdr LV ON = 14,31,45,50,57,58,60-62
j01lop01.spm, spm LV ON = 1-63
miloint.row, row LV ON = 1-22,24-63

b22lop15.dgn-07 HOUFILE023 \hcivil\cf0130\ 3/4/2004

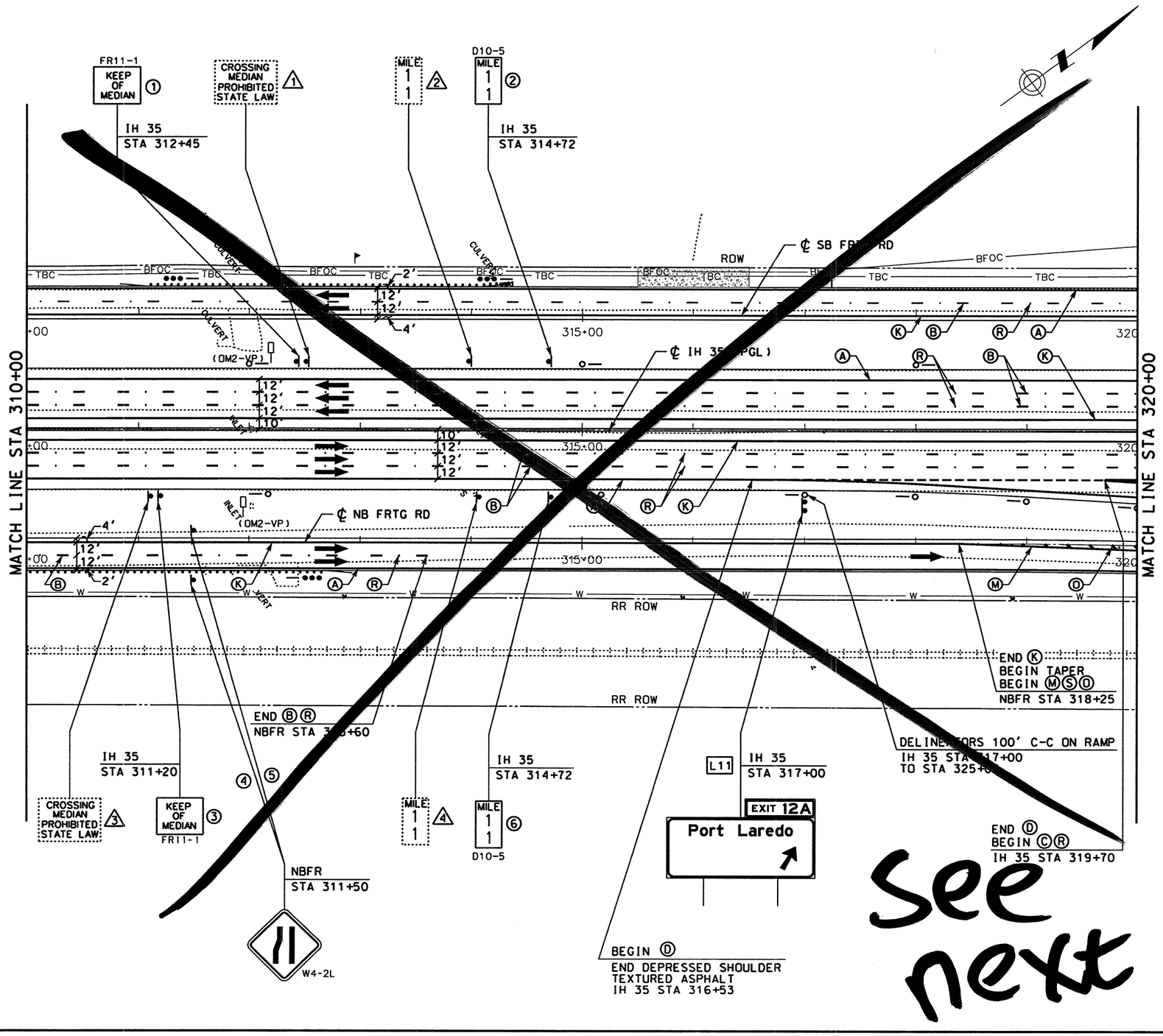

STRIPING LEGEND

- Ⓐ REFL PAV MRK TY I & II (W)(SLD)(4")
- Ⓑ REFL PAV MRK TY I & II (W)(BRK)(4")
- Ⓒ REFL PAV MRK TY I & II (W)(SLD)(8")
- Ⓓ REFL PAV MRK TY I & II (W)(DOT)(4")
- Ⓔ REFL PAV MRK TY I & II (W)(SLD)(12")
- Ⓕ REFL PAV MRK TY I & II (W)(SLD)(24")
- Ⓛ REFL PAV MRK TY I & II (W)(LNDP)(12")
- Ⓖ REFL PAV MRK TY I & II (W)(ARROW)
- Ⓗ REFL PAV MRK TY I & II (W)(DBL ARROW)
- Ⓣ REFL PAV MRK TY I & II (W)(TND ARROW)
- Ⓘ REFL PAV MRK TY I & II (W)(WORD)
- Ⓙ REFL PAV MRK TY I & II (W)(ENT GORE)
- Ⓚ REFL PAV MRK TY I & II (Y)(SLD)(4")
- Ⓜ REFL PAV MRK TY I & II (Y)(SLD)(8")
- Ⓝ REFL PAV MRK TY I & II (Y)(SLD)(12")
- Ⓢ REFL PAV MRK TY I & II (Y)(SLD)(24")
- Ⓓ RAIS PAV MRKR CL B (REFL) TY I-A
- Ⓡ RAIS PAV MRKR CL B (REFL) TY II-C-R
- Ⓞ RAIS PAV MRKR CL B (REFL) TY II-A-A

SIGNING AND DELINEATION LEGEND

- TRAFFIC FLOW ARROWS (PROPOSED)
- TRAFFIC FLOW ARROWS (EXISTING)
- # SMALL SIGN TO BE INSTALLED ITEM (644)
- Ⓔ SIGN TO REMAIN IN PLACE
- # SIGN TO BE REMOVED ITEM (649)
- # SIGN TO BE RELOCATED (ITEM 649)
- L# LARGE SIGN TO BE INSTALLED
- SIGN POST FOR SMALL SIGN
- DOUBLE POSTED SIGN
- SIGN POST, BACK TO BACK SMALL SIGNS
- "K" MARKER
- DELINEATOR (D-SW) (A)
- DELINEATOR (D-SY) (A)
- DELINEATOR (D-DW) (A)
- OBJECT MARKER (OM-2VP)
- OBJECT MARKER (OM-2SR)
- OBJECT MARKER (OB-3B)

0 50 100
SCALE: 1" = 100'

STATE OF TEXAS
SIDNEY S. AFONSO
88055
REGISTERED PROFESSIONAL ENGINEER

THE SEAL APPEARING ON THIS DOCUMENT WAS AUTHORIZED BY SIDNEY S. AFONSO PE 88055, ON MAY 07, 2003

KBR
Engineered by KBR Technical Services, Inc

©2003 Texas Department of Transportation

IH 35
LOOP 20 TO UNIROYAL ROAD
SIGNING AND PAVEMENT MARKINGS
STA 310+00 TO
STA 320+00

SHEET 19 OF 33

FED RD DIV NO	FEDERAL AID PROJECT NO		SHEET NO
6	NH-2002 (79)		788
STATE	STATE DIST		COUNTY
TEXAS	LAREDO		WEBB
CONT	SECT	JOB	HIGHWAY NO
0018	05	062, ETC	IH 35

REF FILE(S): j011op01.uti, uti LV ON = 1-63
j011op01.eop, eop LV ON = 1-17.19-63
j011op01.bck, bck LV ON = 2,9.10.14.17.20.21.25.28
j011op01.alg, alg LV ON = 1-6.35-39
j011op01.bdr, bdr LV ON = 14.31.45.50.57.58.60-62
j011op01.spm, spm LV ON = 1-63
milpoint.row, row LV ON = 1-22.24-63

b22lop16.dgn-12 HOUFILE023 \hcivil\cf0130\ 5/8/2003

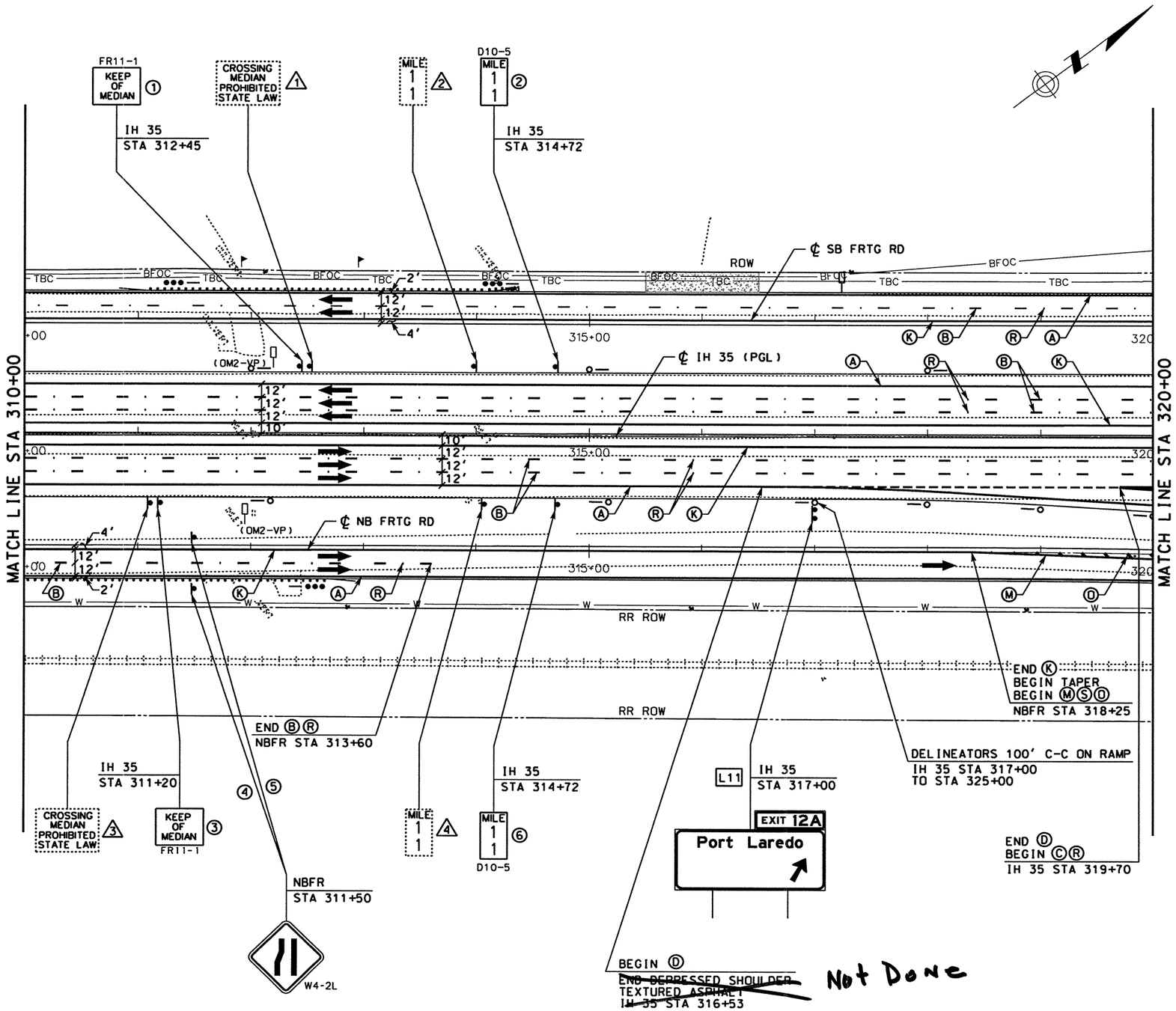

STRIPING LEGEND

- Ⓐ REFL PAV MRK TY I & II (W)(SLD)(4")
- Ⓑ REFL PAV MRK TY I & II (W)(BRK)(4")
- Ⓒ REFL PAV MRK TY I & II (W)(SLD)(8")
- Ⓓ REFL PAV MRK TY I & II (W)(DOT)(4")
- Ⓔ REFL PAV MRK TY I & II (W)(SLD)(12")
- Ⓕ REFL PAV MRK TY I & II (W)(SLD)(24")
- Ⓛ REFL PAV MRK TY I & II (W)(LNDP)(12")
- Ⓖ REFL PAV MRK TY I & II (W)(ARROW)
- Ⓗ REFL PAV MRK TY I & II (W)(DBL ARROW)
- Ⓣ REFL PAV MRK TY I & II (W)(TND ARROW)
- Ⓘ REFL PAV MRK TY I & II (W)(WORD)
- Ⓙ REFL PAV MRK TY I & II (W)(ENT GORE)
- Ⓚ REFL PAV MRK TY I & II (Y)(SLD)(4")
- Ⓜ REFL PAV MRK TY I & II (Y)(SLD)(8")
- Ⓝ REFL PAV MRK TY I & II (Y)(SLD)(12")
- Ⓢ REFL PAV MRK TY I & II (Y)(SLD)(24")
- Ⓓ RAIS PAV MRKR CL B (REFL) TY I-A
- Ⓡ RAIS PAV MRKR CL B (REFL) TY II-C-R
- Ⓞ RAIS PAV MRKR CL B (REFL) TY II-A-A

SIGNING AND DELINEATION LEGEND

- TRAFFIC FLOW ARROWS ~~(PROPOSED)~~
- TRAFFIC FLOW ARROWS (EXISTING)
- # SMALL SIGN TO BE INSTALLED ITEM (644)
- Ⓔ SIGN TO REMAIN IN PLACE
- # SIGN TO BE REMOVED ITEM (649)
- # SIGN TO BE RELOCATED (ITEM 649)
- L# LARGE SIGN TO BE INSTALLED
- SIGN POST FOR SMALL SIGN
- DOUBLE POSTED SIGN
- SIGN POST, BACK TO BACK SMALL SIGNS
- "K" MARKER
- DELINEATOR (D-SW) (A)
- DELINEATOR (D-SY) (A)
- DELINEATOR (D-DW) (A)
- OBJECT MARKER (OM-2VP)
- OBJECT MARKER (OM-2SR)
- OBJECT MARKER (OB-3B)

0 50 100
SCALE: 1" = 100'

STATE OF TEXAS
SIDNEY S. AFONSO
PE 88055
REGISTERED PROFESSIONAL ENGINEER

THE SEAL APPEARING ON THIS DOCUMENT WAS AUTHORIZED BY SIDNEY S. AFONSO PE 88055, ON MARCH 05, 2004

Sidney S. Afonso

3/4/2004

KBR
Engineered by KBR Technical Services, Inc

©2003 Texas Department of Transportation

IH 35
LOOP 20 TO UNIROYAL ROAD
SIGNING AND PAVEMENT MARKINGS
STA 310+00 TO STA 320+00

SHEET 19 OF 33

FED RD DIV NO	FEDERAL AID PROJECT NO		SHEET NO
6	NH-2002 (79)		788
STATE	STATE DIST		COUNTY
TEXAS	LAREDO		WEBB
CONT	SECT	JOB	HIGHWAY NO
0018	05	062, ETC	IH 35

DATE	BY	REV	REVISION
02/17/04	AA	1	MAINLANE SHLDR WIDEN REV EDGE OF PAVEMENT AND PAVEMENT LIMITS

REF FILE(S): j011op01.uti, uti LV ON = 1-63
j011op01.eop, eop LV ON = 1-17,19-63
j011op01.bck, bck LV ON = 2,9,10,14,17,20,21,25,28
j011op01.alg, alg LV ON = 1-6,35-39
j011op01.bdr, bdr LV ON = 14,31,45,50,57,58,60-62
j011op01.spm, spm LV ON = 1-63
milpoint.row, row LV ON = 1-22,24-63

b22lop16.dgn-12 HOUFILE023 \hcivil\cf0130\

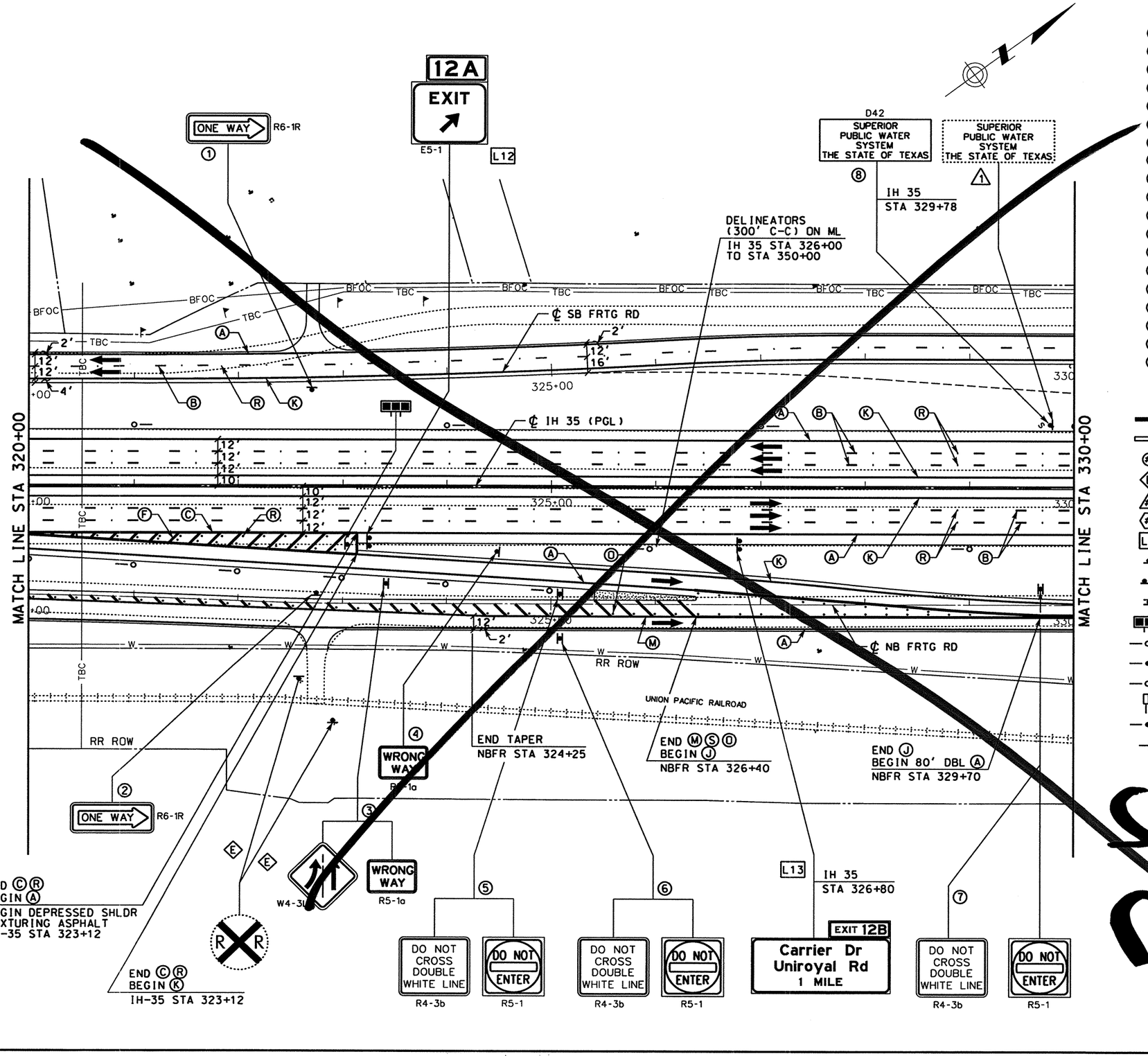

see next

STRIPING LEGEND

- (A) REFL PAV MRK TY I & II (W)(SLD)(4")
- (B) REFL PAV MRK TY I & II (W)(BRK)(4")
- (C) REFL PAV MRK TY I & II (W)(SLD)(8")
- (D) REFL PAV MRK TY I & II (W)(DOT)(4")
- (E) REFL PAV MRK TY I & II (W)(SLD)(12")
- (F) REFL PAV MRK TY I & II (W)(SLD)(24")
- (L) REFL PAV MRK TY I & II (W)(LNDP)(12")
- (G) REFL PAV MRK TY I & II (W)(ARROW)
- (H) REFL PAV MRK TY I & II (W)(DBL ARROW)
- (T) REFL PAV MRK TY I & II (W)(TND ARROW)
- (I) REFL PAV MRK TY I & II (W)(WORD)
- (J) REFL PAV MRK TY I & II (W)(ENT GORE)
- (K) REFL PAV MRK TY I & II (Y)(SLD)(4")
- (M) REFL PAV MRK TY I & II (Y)(SLD)(8")
- (N) REFL PAV MRK TY I & II (Y)(SLD)(12")
- (S) REFL PAV MRK TY I & II (Y)(SLD)(24")
- (D) RAIS PAV MRKR CL B (REFL) TY I-A
- (R) RAIS PAV MRKR CL B (REFL) TY II-C-R
- (O) RAIS PAV MRKR CL B (REFL) TY II-A-A

SIGNING AND DELINEATION LEGEND

- TRAFFIC FLOW ARROWS (PROPOSED)
- TRAFFIC FLOW ARROWS (EXISTING)
- (#) SMALL SIGN TO BE INSTALLED ITEM (644)
- (E) SIGN TO REMAIN IN PLACE
- (#) SIGN TO BE REMOVED ITEM (649)
- (#) SIGN TO BE RELOCATED (ITEM 649)
- [L#] LARGE SIGN TO BE INSTALLED
- SIGN POST FOR SMALL SIGN
- DOUBLE POSTED SIGN
- SIGN POST, BACK TO BACK SMALL SIGNS
- "K" MARKER
- DELINEATOR (D-SW) (A)
- DELINEATOR (D-SY) (A)
- DELINEATOR (D-DW) (A)
- OBJECT MARKER (OM-2VP)
- OBJECT MARKER (OM-2SR)
- OBJECT MARKER (OB-3B)

0 50 100
SCALE: 1" = 100'

STATE OF TEXAS
SIDNEY S. AFONSO
PE 88055
REGISTERED PROFESSIONAL ENGINEER

THE SEAL APPEARING ON THIS DOCUMENT WAS AUTHORIZED BY SIDNEY S. AFONSO PE 88055, ON MAY 07, 2003

Sidney S. Afonso

KBR
Engineered by KBR Technical Services, Inc

©2003 Texas Department of Transportation

IH 35
LOOP 20 TO UNIROYAL ROAD
SIGNING AND PAVEMENT MARKINGS
STA 320+00 TO
STA 330+00

SHEET 20 OF 33

FED RD DIV NO	FEDERAL AID PROJECT NO		SHEET NO
6	NH-2002 (79)		789
STATE	STATE DIST		COUNTY
TEXAS	LAREDO		WEBB
CONT	SECT	JOB	HIGHWAY NO
0018	05	062, ETC	IH 35

5/8/2003
HOUFILE023 \hcivil\cf0130\
b22lop17.dgn-12

REF FILE(S): j01lop01.uti, uti LV ON = 1-63
j01lop01.eop, eop LV ON = 1-17,19-63
j01lop01.bck, bck LV ON = 2,9,10,14,17,20,21,25,28
j01lop01.alg, alg LV ON = 1-6,35-39
j01lop01.bdr, bdr LV ON = 14,31,45,50,57,58,60-62
j01lop01.spm, spm LV ON = 1-63
milaint.row, row LV ON = 1-22,24-63

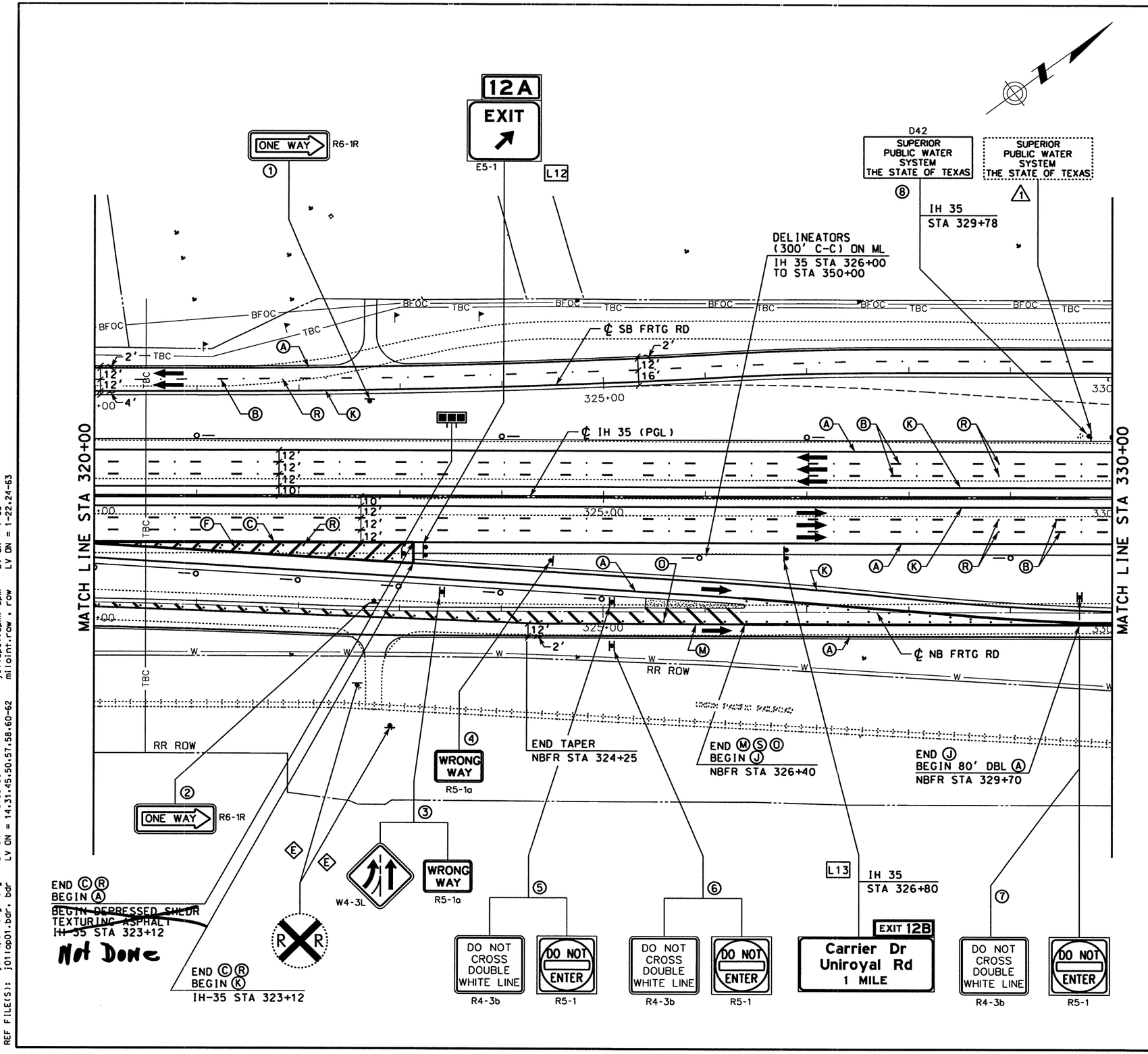

STRIPING LEGEND

- (A) REFL PAV MRK TY I & II (W)(SLD)(4")
- (B) REFL PAV MRK TY I & II (W)(BRK)(4")
- (C) REFL PAV MRK TY I & II (W)(SLD)(8")
- (D) REFL PAV MRK TY I & II (W)(DOT)(4")
- (E) REFL PAV MRK TY I & II (W)(SLD)(12")
- (F) REFL PAV MRK TY I & II (W)(SLD)(24")
- (L) REFL PAV MRK TY I & II (W)(LNDP)(12")
- (G) REFL PAV MRK TY I & II (W)(ARROW)
- (H) REFL PAV MRK TY I & II (W)(DBL ARROW)
- (T) REFL PAV MRK TY I & II (W)(TND ARROW)
- (I) REFL PAV MRK TY I & II (W)(WORD)
- (J) REFL PAV MRK TY I & II (W)(ENT GORE)
- (K) REFL PAV MRK TY I & II (Y)(SLD)(4")
- (M) REFL PAV MRK TY I & II (Y)(SLD)(8")
- (N) REFL PAV MRK TY I & II (Y)(SLD)(12")
- (S) REFL PAV MRK TY I & II (Y)(SLD)(24")
- (O) RAIS PAV MRKR CL B (REFL) TY I-A
- (R) RAIS PAV MRKR CL B (REFL) TY II-C-R
- (Q) RAIS PAV MRKR CL B (REFL) TY II-A-A

SIGNING AND DELINEATION LEGEND

- TRAFFIC FLOW ARROWS ~~(PROPOSED)~~
- TRAFFIC FLOW ARROWS (EXISTING)
- (#) SMALL SIGN TO BE INSTALLED ITEM (644)
- (E) SIGN TO REMAIN IN PLACE
- (#) SIGN TO BE REMOVED ITEM (649)
- (#) SIGN TO BE RELOCATED (ITEM 649)
- L# LARGE SIGN TO BE INSTALLED
- SIGN POST FOR SMALL SIGN
- DOUBLE POSTED SIGN
- SIGN POST, BACK TO BACK SMALL SIGNS
- "K" MARKER
- DELINEATOR (D-SW) (A)
- DELINEATOR (D-SY) (A)
- DELINEATOR (D-DW) (A)
- OBJECT MARKER (OM-2VP)
- OBJECT MARKER (OM-2SR)
- OBJECT MARKER (OB-3B)

0 50 100
SCALE: 1" = 100'

STATE OF TEXAS
SIDNEY S. AFONSO
88055
REGISTERED PROFESSIONAL ENGINEER

THE SEAL APPEARING ON THIS DOCUMENT WAS AUTHORIZED BY SIDNEY S. AFONSO PE 88055, ON MARCH 05, 2004

KBR
Engineered by KBR Technical Services, Inc

©2003 Texas Department of Transportation

IH 35
LOOP 20 TO UNIROYAL ROAD
SIGNING AND PAVEMENT MARKINGS
STA 320+00 TO STA 330+00

SHEET 20 OF 33

FED RD DIV NO	FEDERAL AID PROJECT NO		SHEET NO
6	NH-2002 (79)		789
STATE	STATE DIST		COUNTY
TEXAS	LAREDO		WEBB
CONT	SECT	JOB	HIGHWAY NO
0018	05	062, ETC	IH 35

DATE	BY	REV	REVISION
02/17/04	AA	1	MAINLANE SHLDR WIDEN REV EDGE OF PAVEMENT AND PAVEMENT LIMITS

REF FILE(S): j01lop01.uti, uti LV ON = 1-63
j01lop01.eop, eop LV ON = 1-17,19-63
j01lop01.bck, bck LV ON = 2,9,10,14,17,20,21,25,28
j01lop01.alg, alg LV ON = 1-6,35-39
j01lop01.bdr, bdr LV ON = 14,31,45,50,57,58,60-62
j01lop01.spm, spm LV ON = 1-63
miloint.row, row LV ON = 1-22,24-63

b22lop17.dgn-12 HOUFILE023 \hcivil\cf0130\ 3/4/2004

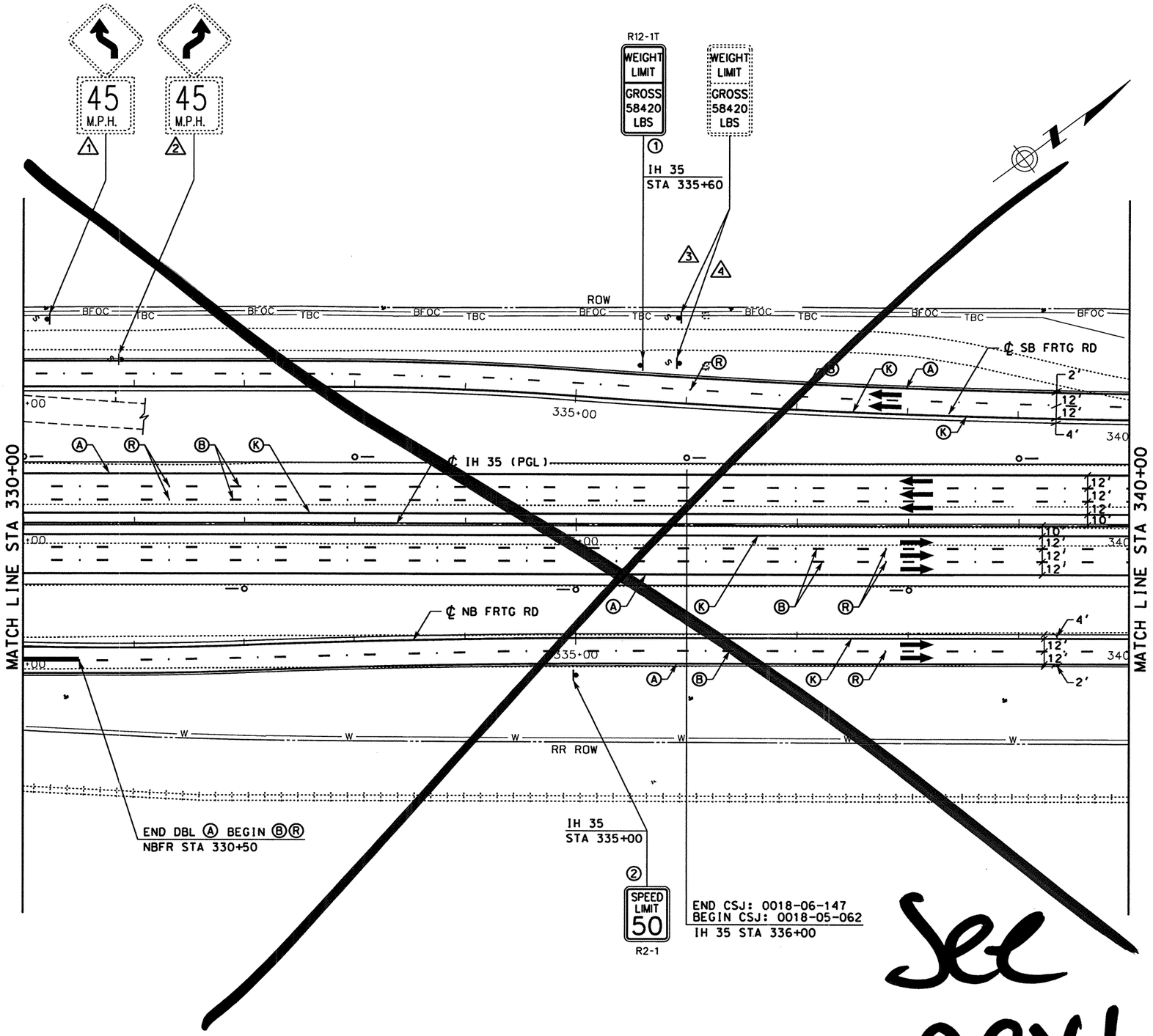

See next

STRIPING LEGEND

- Ⓐ REFL PAV MRK TY I & II (W)(SLD)(4")
- Ⓑ REFL PAV MRK TY I & II (W)(BRK)(4")
- Ⓒ REFL PAV MRK TY I & II (W)(SLD)(8")
- Ⓓ REFL PAV MRK TY I & II (W)(DOT)(4")
- Ⓔ REFL PAV MRK TY I & II (W)(SLD)(12")
- Ⓕ REFL PAV MRK TY I & II (W)(SLD)(24")
- Ⓛ REFL PAV MRK TY I & II (W)(LNDP)(12")
- Ⓖ REFL PAV MRK TY I & II (W)(ARROW)
- Ⓗ REFL PAV MRK TY I & II (W)(DBL ARROW)
- Ⓣ REFL PAV MRK TY I & II (W)(TND ARROW)
- Ⓘ REFL PAV MRK TY I & II (W)(WORD)
- Ⓙ REFL PAV MRK TY I & II (W)(ENT GORE)
- Ⓚ REFL PAV MRK TY I & II (Y)(SLD)(4")
- Ⓜ REFL PAV MRK TY I & II (Y)(SLD)(8")
- Ⓝ REFL PAV MRK TY I & II (Y)(SLD)(12")
- Ⓢ REFL PAV MRK TY I & II (Y)(SLD)(24")
- Ⓓ RAIS PAV MRKR CL B (REFL) TY I-A
- Ⓡ RAIS PAV MRKR CL B (REFL) TY II-C-R
- Ⓞ RAIS PAV MRKR CL B (REFL) TY II-A-A

SIGNING AND DELINEATION LEGEND

- TRAFFIC FLOW ARROWS (PROPOSED)
- TRAFFIC FLOW ARROWS (EXISTING)
- SMALL SIGN TO BE INSTALLED ITEM (644)
- SIGN TO REMAIN IN PLACE
- SIGN TO BE REMOVED ITEM (649)
- SIGN TO BE RELOCATED (ITEM 649)
- LARGE SIGN TO BE INSTALLED
- SIGN POST FOR SMALL SIGN
- DOUBLE POSTED SIGN
- SIGN POST, BACK TO BACK SMALL SIGNS
- "K" MARKER
- DELINEATOR (D-SW) (A)
- DELINEATOR (D-SY) (A)
- DELINEATOR (D-DW) (A)
- OBJECT MARKER (OM-2VP)
- OBJECT MARKER (OM-2SR)
- OBJECT MARKER (OB-3B)

0 50 100
SCALE: 1" = 100'

STATE OF TEXAS
SIDNEY S. AFONSO
88055
REGISTERED PROFESSIONAL ENGINEER

THE SEAL APPEARING ON THIS DOCUMENT WAS AUTHORIZED BY SIDNEY S. AFONSO PE 88055, ON MAY 07, 2003

Sidney Afonso

KBR
Engineered by KBR Technical Services, Inc

©2003 Texas Department of Transportation

IH 35
LOOP 20 TO UNIROYAL ROAD
SIGNING AND PAVEMENT MARKINGS
STA 330+00 TO STA 340+00

SHEET 21 OF 33

FED RD DIV NO	FEDERAL AID PROJECT NO		SHEET NO
6	NH-2002 (79)		790
STATE	STATE DIST		COUNTY
TEXAS	LAREDO		WEBB
CONT	SECT	JOB	HIGHWAY NO
0018	05	062, ETC	IH 35

REF FILE(S): j01lop01.bdr, bdr LV ON = 14,31,45,50,57,58,60-62 j01lop01.alg, alg LV ON = 1-6,35-39 j01lop01.bck, bck LV ON = 2,9,10,14,17,20,21,25,28 j01lop01.eop, eop LV ON = 1-17,19-63 j01lop01.uti, uti LV ON = 1-63
j01lop01.spm, spm LV ON = 1-63 j01lop01.row, row LV ON = 1-22,24-63 miloint.row, row

b22lop18.dgn-12 HOUFILE023 \hcivil\cf0130\ 5/8/2003

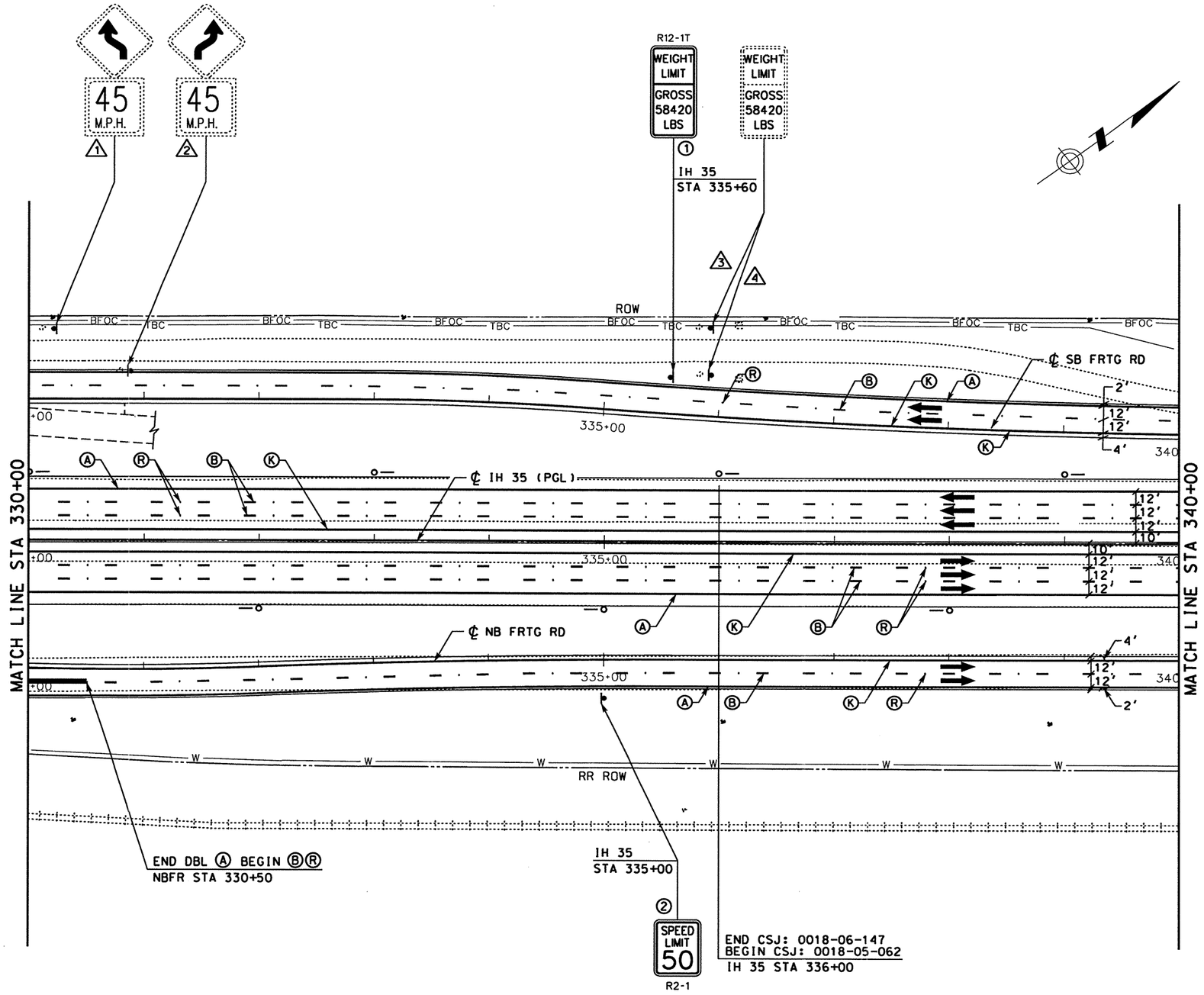

STRIPING LEGEND

- Ⓐ REFL PAV MRK TY I & II (W)(SLD)(4")
- Ⓑ REFL PAV MRK TY I & II (W)(BRK)(4")
- Ⓒ REFL PAV MRK TY I & II (W)(SLD)(8")
- Ⓓ REFL PAV MRK TY I & II (W)(DOT)(4")
- Ⓔ REFL PAV MRK TY I & II (W)(SLD)(12")
- Ⓕ REFL PAV MRK TY I & II (W)(SLD)(24")
- Ⓛ REFL PAV MRK TY I & II (W)(LNDP)(12")
- Ⓖ REFL PAV MRK TY I & II (W)(ARROW)
- Ⓗ REFL PAV MRK TY I & II (W)(DBL ARROW)
- Ⓣ REFL PAV MRK TY I & II (W)(TND ARROW)
- Ⓘ REFL PAV MRK TY I & II (W)(WORD)
- Ⓙ REFL PAV MRK TY I & II (W)(ENT GORE)
- Ⓚ REFL PAV MRK TY I & II (Y)(SLD)(4")
- Ⓜ REFL PAV MRK TY I & II (Y)(SLD)(8")
- Ⓝ REFL PAV MRK TY I & II (Y)(SLD)(12")
- Ⓢ REFL PAV MRK TY I & II (Y)(SLD)(24")
- Ⓞ RAIS PAV MRKR CL B (REFL) TY I-A
- Ⓡ RAIS PAV MRKR CL B (REFL) TY II-C-R
- Ⓠ RAIS PAV MRKR CL B (REFL) TY II-A-A

SIGNING AND DELINEATION LEGEND

- TRAFFIC FLOW ARROWS (~~PROPOSED~~)
- TRAFFIC FLOW ARROWS (EXISTING)
- SMALL SIGN TO BE INSTALLED ITEM (644)
- SIGN TO REMAIN IN PLACE
- SIGN TO BE REMOVED ITEM (649)
- SIGN TO BE RELOCATED (ITEM 649)
- LARGE SIGN TO BE INSTALLED
- SIGN POST FOR SMALL SIGN
- DOUBLE POSTED SIGN
- SIGN POST, BACK TO BACK SMALL SIGNS
- "K" MARKER
- DELINEATOR (D-SW) (A)
- DELINEATOR (D-SY) (A)
- DELINEATOR (D-DW) (A)
- OBJECT MARKER (OM-2VP)
- OBJECT MARKER (OM-2SR)
- OBJECT MARKER (OB-3B)

0 50 100
SCALE: 1" = 100'

STATE OF TEXAS
SIDNEY S. AFONSO
PE 88055
REGISTERED PROFESSIONAL ENGINEER

THE SEAL APPEARING ON THIS DOCUMENT WAS AUTHORIZED BY SIDNEY S. AFONSO PE 88055, ON MARCH 05, 2004

KBR
Engineered by KBR Technical Services, Inc

©2003 Texas Department of Transportation

IH 35
LOOP 20 TO UNIROYAL ROAD
SIGNING AND PAVEMENT MARKINGS
STA 330+00 TO STA 340+00

SHEET 21 OF 33

FED RD DIV NO	FEDERAL AID PROJECT NO		SHEET NO
6	NH-2002 (79)		790
STATE	STATE DIST		COUNTY
TEXAS	LAREDO		WEBB
CONT	SECT	JOB	HIGHWAY NO
0018	05	062, ETC	IH 35

DATE	BY	REV	REVISION
02/17/04	AA	1	MAINLANE SHLDR WIDEN REV EDGE OF PAVEMENT AND PAVEMENT LIMITS

REF FILE(S): j011op01.bdr, bdr LV ON = 14.31,45,50,57,58,60-62
j011op01.alg, alg LV ON = 1-6,35-39
j011op01.bck, bck LV ON = 2,9,10,14,17,20,21,25,28
j011op01.eop, eop LV ON = 1-17,19-63
j011op01.uti, uti LV ON = 1-63
j011op01.spm, spm LV ON = 1-63
miloint.row, row LV ON = 1-22,24-63

b22lop18.dgn-12 HOUFILE023 \hcivil\cf0130\ 3/4/2004

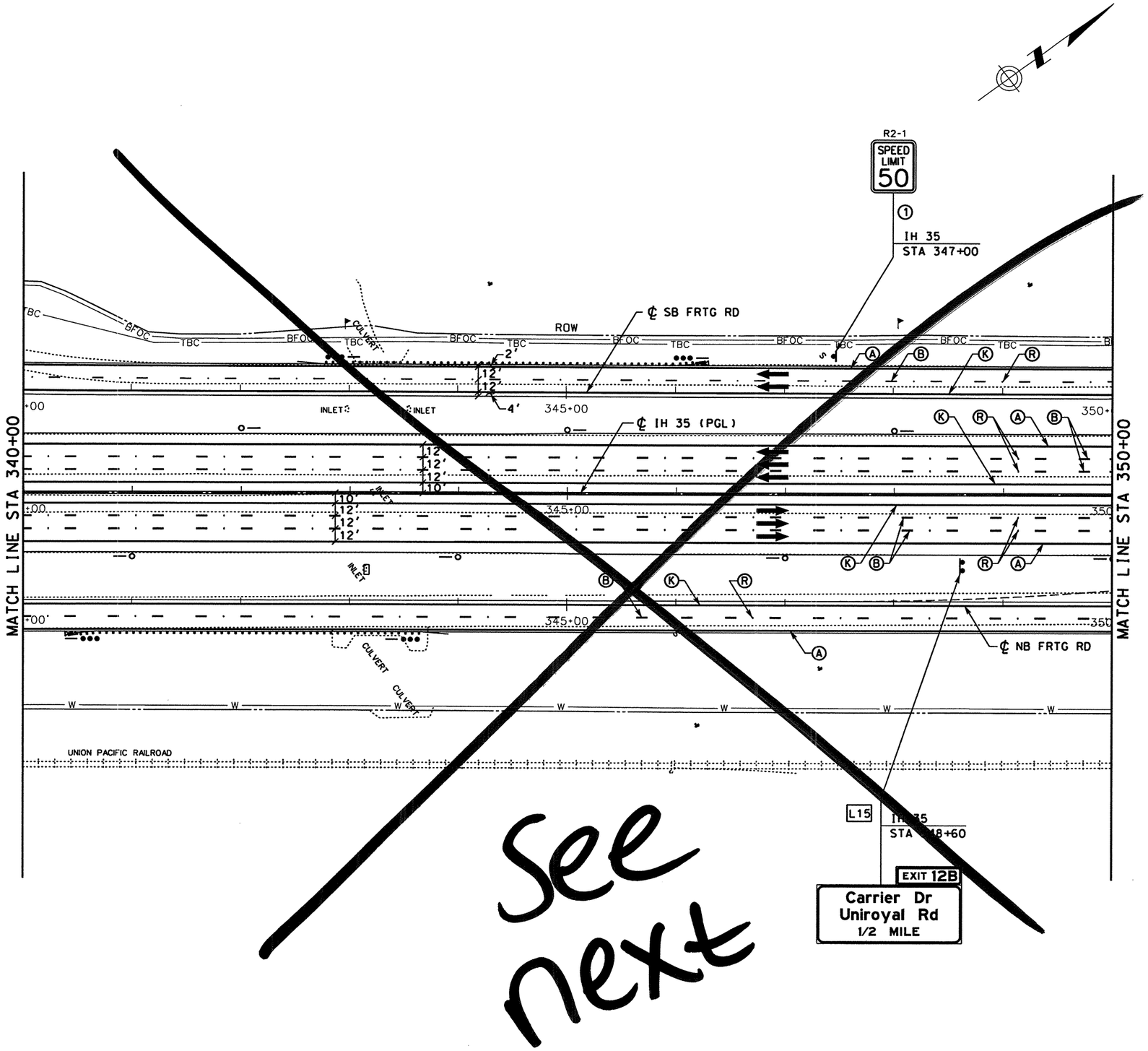

STRIPING LEGEND

- Ⓐ REFL PAV MRK TY I & II (W)(SLD)(4")
- Ⓑ REFL PAV MRK TY I & II (W)(BRK)(4")
- Ⓒ REFL PAV MRK TY I & II (W)(SLD)(8")
- Ⓓ REFL PAV MRK TY I & II (W)(DOT)(4")
- Ⓔ REFL PAV MRK TY I & II (W)(SLD)(12")
- Ⓕ REFL PAV MRK TY I & II (W)(SLD)(24")
- Ⓛ REFL PAV MRK TY I & II (W)(LNDP)(12")
- Ⓖ REFL PAV MRK TY I & II (W)(ARROW)
- Ⓗ REFL PAV MRK TY I & II (W)(DBL ARROW)
- Ⓣ REFL PAV MRK TY I & II (W)(TND ARROW)
- Ⓘ REFL PAV MRK TY I & II (W)(WORD)
- Ⓙ REFL PAV MRK TY I & II (W)(ENT GORE)
- Ⓚ REFL PAV MRK TY I & II (Y)(SLD)(4")
- Ⓜ REFL PAV MRK TY I & II (Y)(SLD)(8")
- Ⓝ REFL PAV MRK TY I & II (Y)(SLD)(12")
- Ⓢ REFL PAV MRK TY I & II (Y)(SLD)(24")
- Ⓓ RAIS PAV MRKR CL B (REFL) TY I-A
- Ⓡ RAIS PAV MRKR CL B (REFL) TY II-C-R
- Ⓞ RAIS PAV MRKR CL B (REFL) TY II-A-A

SIGNING AND DELINEATION LEGEND

- TRAFFIC FLOW ARROWS (PROPOSED)
- TRAFFIC FLOW ARROWS (EXISTING)
- SMALL SIGN TO BE INSTALLED ITEM (644)
- SIGN TO REMAIN IN PLACE
- SIGN TO BE REMOVED ITEM (649)
- SIGN TO BE RELOCATED (ITEM 649)
- LARGE SIGN TO BE INSTALLED
- SIGN POST FOR SMALL SIGN
- DOUBLE POSTED SIGN
- SIGN POST, BACK TO BACK SMALL SIGNS
- "K" MARKER
- DELINEATOR (D-SW) (A)
- DELINEATOR (D-SY) (A)
- DELINEATOR (D-DW) (A)
- OBJECT MARKER (OM-2VP)
- OBJECT MARKER (OM-2SR)
- OBJECT MARKER (OB-3B)

0 50 100
SCALE: 1" = 100'

STATE OF TEXAS
SIDNEY S. AFONSO
88055
REGISTERED PROFESSIONAL ENGINEER

THE SEAL APPEARING ON THIS DOCUMENT WAS AUTHORIZED BY SIDNEY S. AFONSO PE 88055, ON MAY 07, 2005

Sidney S. Afonso

KBR
Engineered by KBR Technical Services, Inc

©2003 Texas Department of Transportation

IH 35
LOOP 20 TO UNIROYAL ROAD
SIGNING AND PAVEMENT MARKINGS
STA 340+00 TO
STA 350+00

SHEET 22 OF 33

FED RD DIV NO	FEDERAL AID PROJECT NO		SHEET NO
6	NH-2002 (79)		791
STATE	STATE DIST		COUNTY
TEXAS	LAREDO		WEBB
CONT	SECT	JOB	HIGHWAY NO
0018	05	062, ETC	IH 35

REF FILE(S): j01lop01.utl, utl LV ON = 1-63
j01lop01.eop, eop LV ON = 1-17,19-63
j01lop01.bck, bck LV ON = 2,9,10,14,17,20,21,25,28
j01lop01.alg, alg LV ON = 1-6,35-39
j01lop01.bdr, bdr LV ON = 14,31,45,50,57,58,60-62
j01lop01.spm, spm LV ON = 1-63
miloint.row, row LV ON = 1-22,24-63

b22lop19.dgn-08 HOUFILE023 \hcivil\cf0130\ 5/8/2003

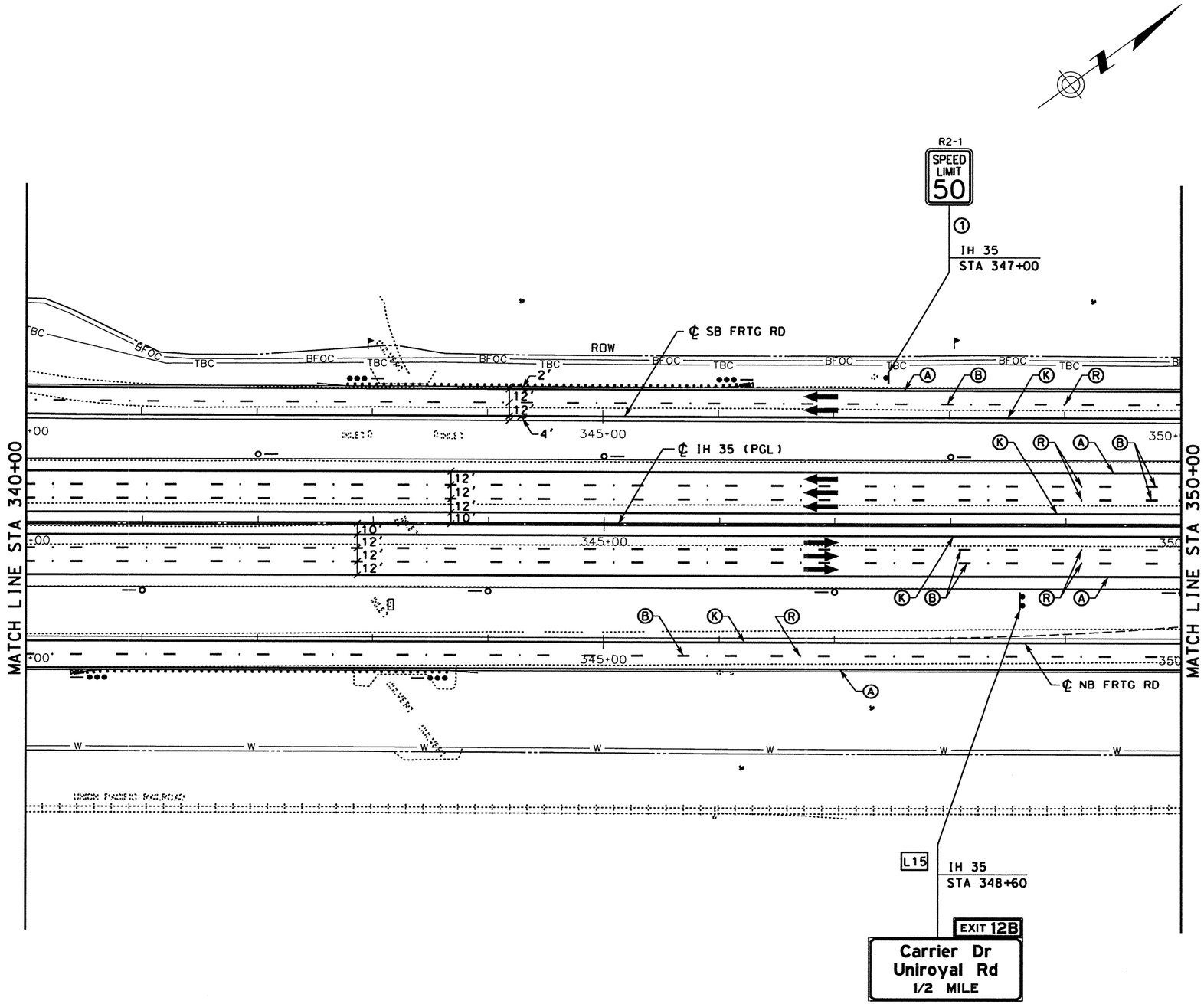

STRIPING LEGEND

- (A) REFL PAV MRK TY I & II (W)(SLD)(4")
- (B) REFL PAV MRK TY I & II (W)(BRK)(4")
- (C) REFL PAV MRK TY I & II (W)(SLD)(8")
- (D) REFL PAV MRK TY I & II (W)(DOT)(4")
- (E) REFL PAV MRK TY I & II (W)(SLD)(12")
- (F) REFL PAV MRK TY I & II (W)(SLD)(24")
- (L) REFL PAV MRK TY I & II (W)(LNDP)(12")
- (G) REFL PAV MRK TY I & II (W)(ARROW)
- (H) REFL PAV MRK TY I & II (W)(DBL ARROW)
- (T) REFL PAV MRK TY I & II (W)(TND ARROW)
- (I) REFL PAV MRK TY I & II (W)(WORD)
- (J) REFL PAV MRK TY I & II (W)(ENT GORE)
- (K) REFL PAV MRK TY I & II (Y)(SLD)(4")
- (M) REFL PAV MRK TY I & II (Y)(SLD)(8")
- (N) REFL PAV MRK TY I & II (Y)(SLD)(12")
- (S) REFL PAV MRK TY I & II (Y)(SLD)(24")
- (O) RAIS PAV MRKR CL B (REFL) TY I-A
- (R) RAIS PAV MRKR CL B (REFL) TY II-C-R
- (Q) RAIS PAV MRKR CL B (REFL) TY II-A-A

SIGNING AND DELINEATION LEGEND

- TRAFFIC FLOW ARROWS (~~PROPOSED~~)
- TRAFFIC FLOW ARROWS (EXISTING)
- (#) SMALL SIGN TO BE INSTALLED ITEM (644)
- (E) SIGN TO REMAIN IN PLACE
- (#) SIGN TO BE REMOVED ITEM (649)
- (#) SIGN TO BE RELOCATED (ITEM 649)
- [L#] LARGE SIGN TO BE INSTALLED
- SIGN POST FOR SMALL SIGN
- DOUBLE POSTED SIGN
- SIGN POST, BACK TO BACK SMALL SIGNS
- "K" MARKER
- DELINEATOR (D-SW) (A)
- DELINEATOR (D-SY) (A)
- DELINEATOR (D-DW) (A)
- OBJECT MARKER (OM-2VP)
- OBJECT MARKER (OM-2SR)
- OBJECT MARKER (OB-3B)

0 50 100
SCALE: 1" = 100'

STATE OF TEXAS
SIDNEY S. AFONSO
88055
REGISTERED PROFESSIONAL ENGINEER

THE SEAL APPEARING ON THIS DOCUMENT WAS AUTHORIZED BY SIDNEY S. AFONSO PE 88055, ON MARCH 05, 2004

KBR
Engineered by KBR Technical Services, Inc

©2003 Texas Department of Transportation

IH 35
LOOP 20 TO UNIROYAL ROAD
SIGNING AND PAVEMENT MARKINGS
STA 340+00 TO
STA 350+00

SHEET 22 OF 33

FED RD DIV NO	FEDERAL AID PROJECT NO		SHEET NO
6	NH-2002 (79)		791
STATE	STATE DIST		COUNTY
TEXAS	LAREDO		WEBB
CONT	SECT	JOB	HIGHWAY NO
0018	05	062, ETC	IH 35

DATE	BY	REV	REVISION
02/17/04	AA	1	MAINLANE SHLDR WIDEN REV EDGE OF PAVEMENT AND PAVEMENT LIMITS

REF FILE(S): j011op01.uti, uti LV ON = 1-63
j011op01.eop, eop LV ON = 1-17,19-63
j011op01.bck, bck LV ON = 2,9,10,14,17,20,21,25,28
j011op01.alg, alg LV ON = 1-6,35-39
j011op01.bdr, bdr LV ON = 14,31,45,50,57,58,60-62
j011op01.spm, spm LV ON = 1-63
milpoint.row, row LV ON = 1-22,24-63

3/4/2004
HOUFILE023 \hcivil\cf0130\
b22lop19.dgn-08

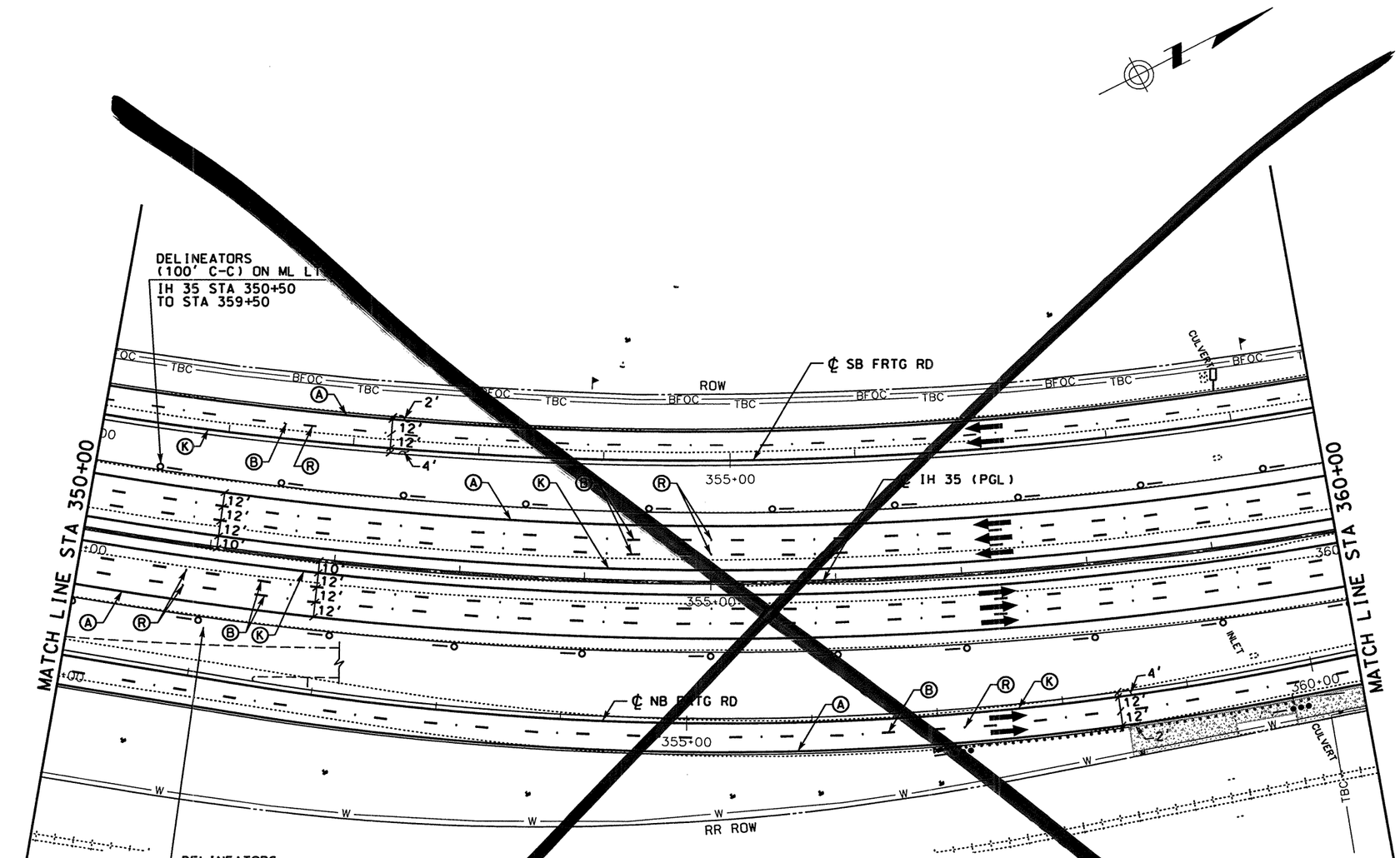

see next

STRIPING LEGEND

- (A) REFL PAV MRK TY I & II (W)(SLD)(4")
- (B) REFL PAV MRK TY I & II (W)(BRK)(4")
- (C) REFL PAV MRK TY I & II (W)(SLD)(8")
- (D) REFL PAV MRK TY I & II (W)(DOT)(4")
- (E) REFL PAV MRK TY I & II (W)(SLD)(12")
- (F) REFL PAV MRK TY I & II (W)(SLD)(24")
- (L) REFL PAV MRK TY I & II (W)(LNDP)(12")
- (G) REFL PAV MRK TY I & II (W)(ARROW)
- (H) REFL PAV MRK TY I & II (W)(DBL ARROW)
- (T) REFL PAV MRK TY I & II (W)(TND ARROW)
- (I) REFL PAV MRK TY I & II (W)(WORD)
- (J) REFL PAV MRK TY I & II (W)(ENT GORE)
- (K) REFL PAV MRK TY I & II (Y)(SLD)(4")
- (M) REFL PAV MRK TY I & II (Y)(SLD)(8")
- (N) REFL PAV MRK TY I & II (Y)(SLD)(12")
- (S) REFL PAV MRK TY I & II (Y)(SLD)(24")
- (O) RAIS PAV MRKR CL B (REFL) TY I-A
- (R) RAIS PAV MRKR CL B (REFL) TY II-C-R
- (Q) RAIS PAV MRKR CL B (REFL) TY II-A-A

SIGNING AND DELINEATION LEGEND

- TRAFFIC FLOW ARROWS (PROPOSED)
- TRAFFIC FLOW ARROWS (EXISTING)
- (#) SMALL SIGN TO BE INSTALLED ITEM (644)
- (E) SIGN TO REMAIN IN PLACE
- (#) SIGN TO BE REMOVED ITEM (649)
- (#) SIGN TO BE RELOCATED (ITEM 649)
- [L#] LARGE SIGN TO BE INSTALLED
- SIGN POST FOR SMALL SIGN
- DOUBLE POSTED SIGN
- SIGN POST, BACK TO BACK SMALL SIGNS
- "K" MARKER
- DELINEATOR (D-SW) (A)
- DELINEATOR (D-SY) (A)
- DELINEATOR (D-DW) (A)
- OBJECT MARKER (OM-2VP)
- OBJECT MARKER (OM-2SR)
- OBJECT MARKER (OB-3B)

0 50 100
SCALE: 1" = 100'

STATE OF TEXAS
SIDNEY S. AFONSO
88055
REGISTERED PROFESSIONAL ENGINEER

THE SEAL APPEARING ON THIS DOCUMENT WAS AUTHORIZED BY SIDNEY S. AFONSO PE 88055, ON MAY 07, 2003

Sidney Afonso

KBR

Engineered by KBR Technical Services, Inc

©2003 Texas Department of Transportation

IH 35
LOOP 20 TO UNIROYAL ROAD
SIGNING AND PAVEMENT MARKINGS
STA 350+00 TO
STA 360+00

SHEET 23 OF 33

FED RD DIV NO	FEDERAL AID PROJECT NO		SHEET NO
6	NH-2002 (79)		792
STATE	STATE DIST		COUNTY
TEXAS	LAREDO		WEBB
CONT	SECT	JOB	HIGHWAY NO
0018	05	062, ETC	IH 35

REF FILE(S): j011op01.utl, utl LV ON = 1-63
j011op01.eop, eop LV ON = 1-17,19-63
j011op01.bck, bck LV ON = 2,9,10,14,17,20,21,25,28
j011op01.alg, alg LV ON = 1-6,35-39
j011op01.bdr, bdr LV ON = 14,31,45,50,57,58,60-62
j011op01.spm, spm LV ON = 1-63
milointr.row, row LV ON = 1-22,24-63

b22lop20.dgn-14 HOUFILE023 \hcivil\c0130\ 5/8/2003

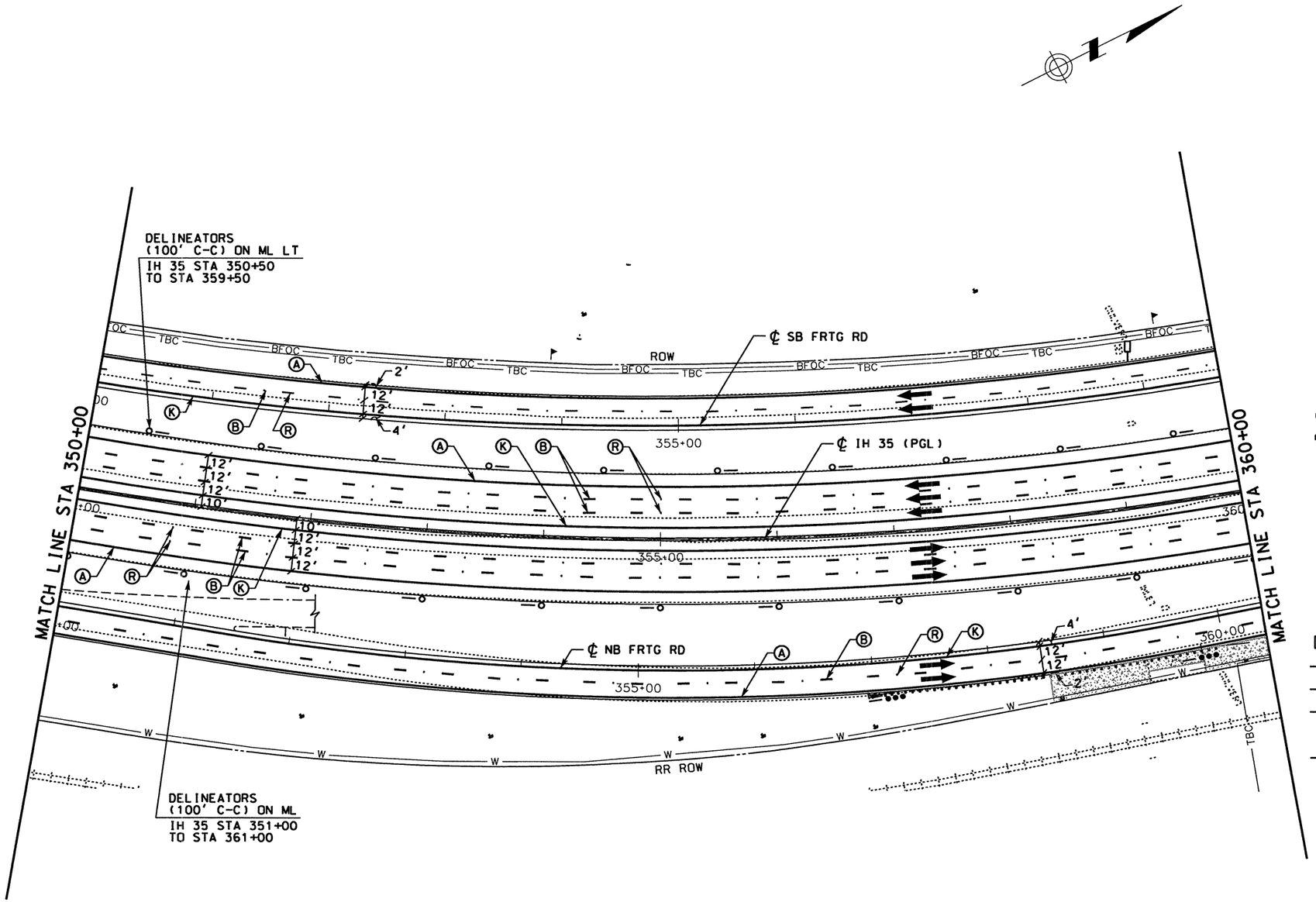

STRIPING LEGEND

- (A) REFL PAV MRK TY I & II (W)(SLD)(4")
- (B) REFL PAV MRK TY I & II (W)(BRK)(4")
- (C) REFL PAV MRK TY I & II (W)(SLD)(8")
- (D) REFL PAV MRK TY I & II (W)(DOT)(4")
- (E) REFL PAV MRK TY I & II (W)(SLD)(12")
- (F) REFL PAV MRK TY I & II (W)(SLD)(24")
- (L) REFL PAV MRK TY I & II (W)(LNDP)(12")
- (G) REFL PAV MRK TY I & II (W)(ARROW)
- (H) REFL PAV MRK TY I & II (W)(DBL ARROW)
- (T) REFL PAV MRK TY I & II (W)(TND ARROW)
- (I) REFL PAV MRK TY I & II (W)(WORD)
- (J) REFL PAV MRK TY I & II (W)(ENT GORE)
- (K) REFL PAV MRK TY I & II (Y)(SLD)(4")
- (M) REFL PAV MRK TY I & II (Y)(SLD)(8")
- (N) REFL PAV MRK TY I & II (Y)(SLD)(12")
- (S) REFL PAV MRK TY I & II (Y)(SLD)(24")
- (O) RAIS PAV MRKR CL B (REFL) TY I-A
- (R) RAIS PAV MRKR CL B (REFL) TY II-C-R
- (O) RAIS PAV MRKR CL B (REFL) TY II-A-A

SIGNING AND DELINEATION LEGEND

- TRAFFIC FLOW ARROWS ~~(PROPOSED)~~
- TRAFFIC FLOW ARROWS (EXISTING)
- (#) SMALL SIGN TO BE INSTALLED ITEM (644)
- (E) SIGN TO REMAIN IN PLACE
- (#) SIGN TO BE REMOVED ITEM (649)
- (#) SIGN TO BE RELOCATED (ITEM 649)
- [L#] LARGE SIGN TO BE INSTALLED
- SIGN POST FOR SMALL SIGN
- DOUBLE POSTED SIGN
- SIGN POST, BACK TO BACK SMALL SIGNS
- "K" MARKER
- DELINEATOR (D-SW) (A)
- DELINEATOR (D-SY) (A)
- DELINEATOR (D-DW) (A)
- OBJECT MARKER (OM-2VP)
- OBJECT MARKER (OM-2SR)
- OBJECT MARKER (OB-3B)

0 50 100
SCALE: 1" = 100'

STATE OF TEXAS
SIDNEY S. AFONSO
88055
REGISTERED PROFESSIONAL ENGINEER

THE SEAL APPEARING ON THIS DOCUMENT WAS AUTHORIZED BY SIDNEY S. AFONSO PE 88055, ON MARCH 05, 2004

KBR
Engineered by KBR Technical Services, Inc

©2003 Texas Department of Transportation

IH 35
LOOP 20 TO UNIROYAL ROAD
SIGNING AND PAVEMENT MARKINGS
STA 350+00 TO
STA 360+00

SHEET 23 OF 33

FED RD DIV NO	FEDERAL AID PROJECT NO		SHEET NO
6	NH-2002 (79)		792
STATE	STATE DIST		COUNTY
TEXAS	LAREDO		WEBB
CONT	SECT	JOB	HIGHWAY NO
0018	05	062, ETC	IH 35

DATE	BY	REV	REVISION
02/17/04	AA	1	MAINLANE SHLDR WIDEN REV EDGE OF PAVEMENT AND PAVEMENT LIMITS

REF FILE(S): j011op01.utl, utl LV ON = 1-63
j011op01.eop, eop LV ON = 1-17,19-63
j011op01.bck, bck LV ON = 2-9,10,14,17,20,21,25,28
j011op01.alg, alg LV ON = 1-6,35-39
j011op01.bdr, bdr LV ON = 14,31,45,50,57,58,60-62
j011op01.spm, spm LV ON = 1-63
mi1oint.row, row LV ON = 1-22,24-63

b22lop20.dgn-14 HOUFILE023 \hcivil\cf0130\ 3/4/2004

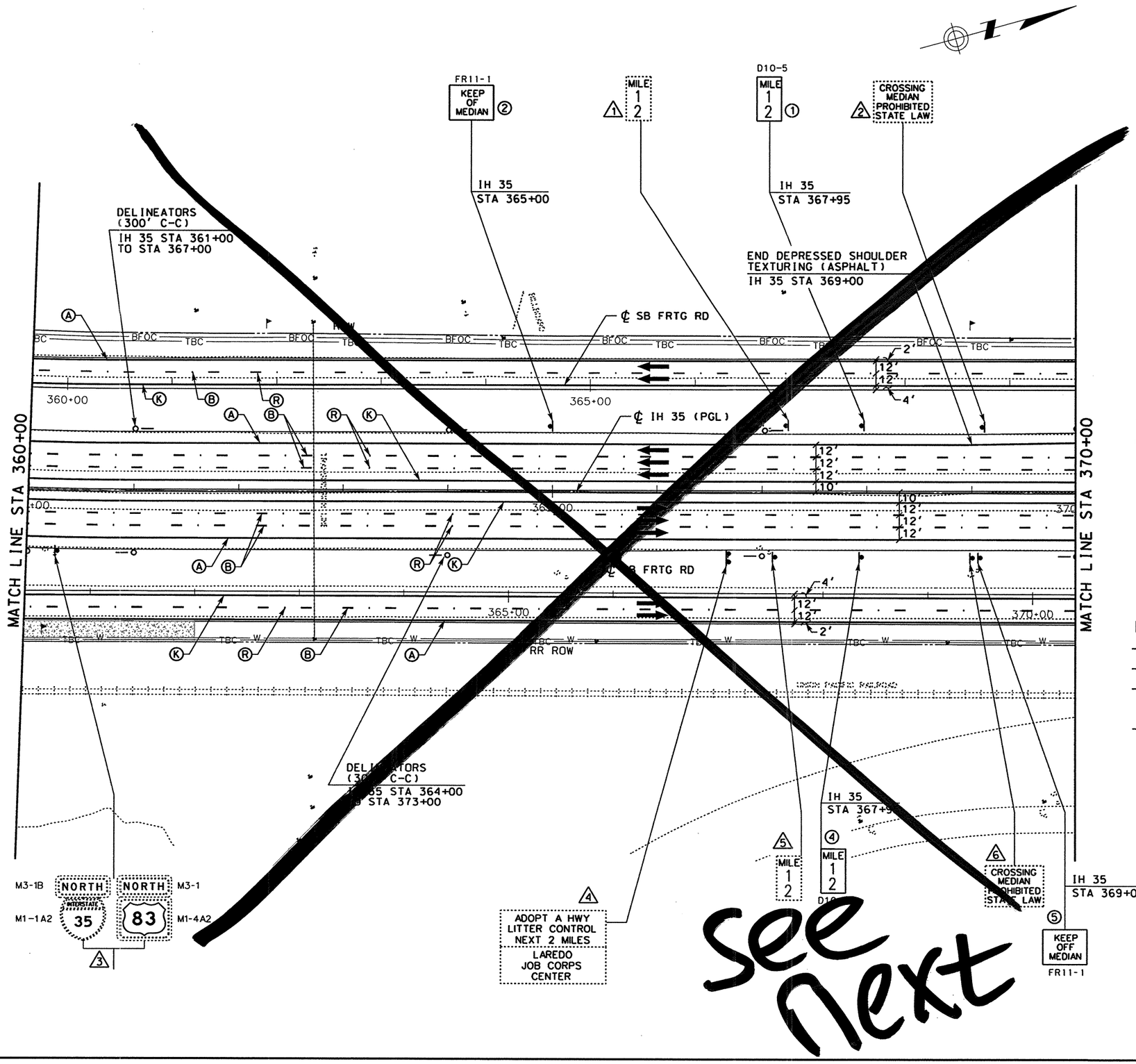

STRIPING LEGEND

- (A) REFL PAV MRK TY I & II (W)(SLD)(4")
- (B) REFL PAV MRK TY I & II (W)(BRK)(4")
- (C) REFL PAV MRK TY I & II (W)(SLD)(8")
- (D) REFL PAV MRK TY I & II (W)(DOT)(4")
- (E) REFL PAV MRK TY I & II (W)(SLD)(12")
- (F) REFL PAV MRK TY I & II (W)(SLD)(24")
- (L) REFL PAV MRK TY I & II (W)(LNDP)(12")
- (G) REFL PAV MRK TY I & II (W)(ARROW)
- (H) REFL PAV MRK TY I & II (W)(DBL ARROW)
- (T) REFL PAV MRK TY I & II (W)(TND ARROW)
- (I) REFL PAV MRK TY I & II (W)(WORD)
- (J) REFL PAV MRK TY I & II (W)(ENT GORE)
- (K) REFL PAV MRK TY I & II (Y)(SLD)(4")
- (M) REFL PAV MRK TY I & II (Y)(SLD)(8")
- (N) REFL PAV MRK TY I & II (Y)(SLD)(12")
- (S) REFL PAV MRK TY I & II (Y)(SLD)(24")
- (D) RAIS PAV MRKR CL B (REFL) TY I-A
- (R) RAIS PAV MRKR CL B (REFL) TY II-C-R
- (O) RAIS PAV MRKR CL B (REFL) TY II-A-A

SIGNING AND DELINEATION LEGEND

- TRAFFIC FLOW ARROWS (PROPOSED)
- TRAFFIC FLOW ARROWS (EXISTING)
- (#) SMALL SIGN TO BE INSTALLED ITEM (644)
- (E) SIGN TO REMAIN IN PLACE
- (#) SIGN TO BE REMOVED ITEM (649)
- (#) SIGN TO BE RELOCATED (ITEM 649)
- [L#] LARGE SIGN TO BE INSTALLED
- SIGN POST FOR SMALL SIGN
- DOUBLE POSTED SIGN
- SIGN POST, BACK TO BACK SMALL SIGNS
- "K" MARKER
- DELINEATOR (D-SW) (A)
- DELINEATOR (D-SY) (A)
- DELINEATOR (D-DW) (A)
- OBJECT MARKER (OM-2VP)
- OBJECT MARKER (OM-2SR)
- OBJECT MARKER (OB-3B)

0 50 100
SCALE: 1" = 100'

STATE OF TEXAS
SIDNEY S. AFONSO
88055
REGISTERED PROFESSIONAL ENGINEER

THE SEAL APPEARING ON THIS DOCUMENT WAS AUTHORIZED BY SIDNEY S. AFONSO PE 88055, ON MAY 30, 2003

KBR
Engineered by KBR Technical Services, Inc

©2003 Texas Department of Transportation

IH 35
LOOP 20 TO UNIROYAL ROAD
SIGNING AND PAVEMENT MARKINGS
STA 360+00 TO
STA 370+00

SHEET 24 OF 33

FED RD DIV NO	FEDERAL AID PROJECT NO		SHEET NO
6	NH-2002 (79)		793
STATE	STATE DIST		COUNTY
TEXAS	LAREDO		WEBB
CONT	SECT	JOB	HIGHWAY NO
0018	05	062, ETC	IH 35

6/2/2003

REF FILE(S): j011op01.utl, utl LV ON = 1-63
j011op01.eop, eop LV ON = 1-17,19-63
j011op01.bck, bck LV ON = 2,9,10,14,17,20,21,25,28
j011op01.alg, alg LV ON = 1-6,35-39
j011op01.bdr, bdr LV ON = 14,31,45,50,57,58,60-62
j011op01.spm, spm LV ON = 1-63
milaint.row, row LV ON = 1-22,24-63

HOUFILE023 \hcivil\cf0130\
b22lop21.dgn-09

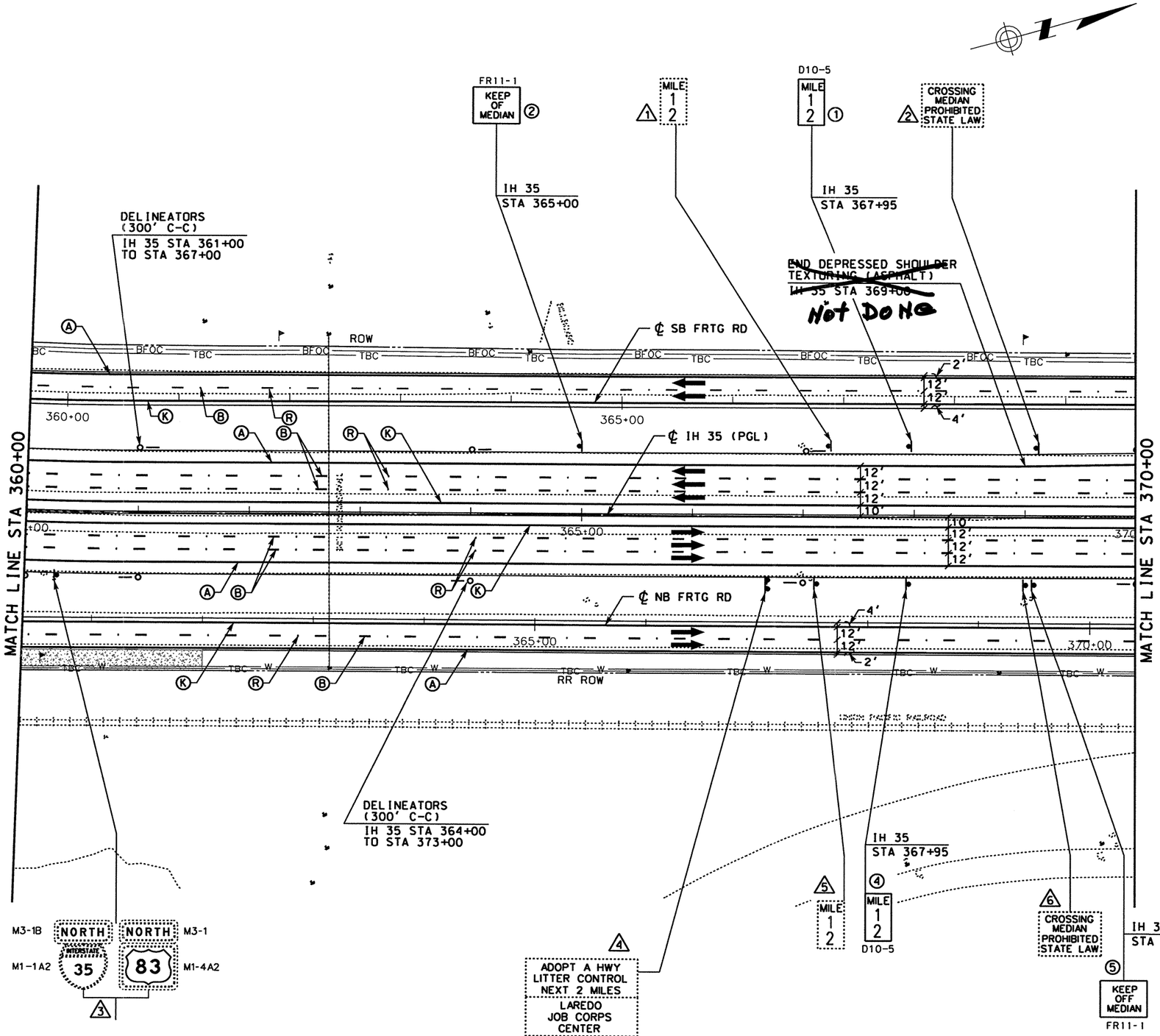

STRIPING LEGEND

- (A) REFL PAV MRK TY I & II (W)(SLD)(4")
- (B) REFL PAV MRK TY I & II (W)(BRK)(4")
- (C) REFL PAV MRK TY I & II (W)(SLD)(8")
- (D) REFL PAV MRK TY I & II (W)(DOT)(4")
- (E) REFL PAV MRK TY I & II (W)(SLD)(12")
- (F) REFL PAV MRK TY I & II (W)(SLD)(24")
- (L) REFL PAV MRK TY I & II (W)(LNDP)(12")
- (G) REFL PAV MRK TY I & II (W)(ARROW)
- (H) REFL PAV MRK TY I & II (W)(DBL ARROW)
- (T) REFL PAV MRK TY I & II (W)(TND ARROW)
- (I) REFL PAV MRK TY I & II (W)(WORD)
- (J) REFL PAV MRK TY I & II (W)(ENT GORE)
- (K) REFL PAV MRK TY I & II (Y)(SLD)(4")
- (M) REFL PAV MRK TY I & II (Y)(SLD)(8")
- (N) REFL PAV MRK TY I & II (Y)(SLD)(12")
- (S) REFL PAV MRK TY I & II (Y)(SLD)(24")
- (O) RAIS PAV MRKR CL B (REFL) TY I-A
- (R) RAIS PAV MRKR CL B (REFL) TY II-C-R
- (Q) RAIS PAV MRKR CL B (REFL) TY II-A-A

SIGNING AND DELINEATION LEGEND

- TRAFFIC FLOW ARROWS ~~(PROPOSED)~~
- TRAFFIC FLOW ARROWS (EXISTING)
- (#) SMALL SIGN TO BE INSTALLED ITEM (644)
- (E) SIGN TO REMAIN IN PLACE
- (#) SIGN TO BE REMOVED ITEM (649)
- (#) SIGN TO BE RELOCATED (ITEM 649)
- [L#] LARGE SIGN TO BE INSTALLED
- SIGN POST FOR SMALL SIGN
- DOUBLE POSTED SIGN
- SIGN POST, BACK TO BACK SMALL SIGNS
- "K" MARKER
- DELINEATOR (D-SW) (A)
- DELINEATOR (D-SY) (A)
- DELINEATOR (D-DW) (A)
- OBJECT MARKER (OM-2VP)
- OBJECT MARKER (OM-2SR)
- OBJECT MARKER (OB-3B)

0 50 100
SCALE: 1" = 100'

STATE OF TEXAS
SIDNEY S. AFONSO
88055
REGISTERED PROFESSIONAL ENGINEER

THE SEAL APPEARING ON THIS DOCUMENT WAS AUTHORIZED BY SIDNEY S. AFONSO PE 88055, ON MARCH 05, 2004

Sidney Afonso

KBR
Engineered by KBR Technical Services, Inc

©2003 Texas Department of Transportation

IH 35
LOOP 20 TO UNIROYAL ROAD
SIGNING AND PAVEMENT MARKINGS
STA 360+00 TO STA 370+00

SHEET 24 OF 33

FED RD DIV NO	FEDERAL AID PROJECT NO	SHEET NO
6	NH-2002 (79)	793
STATE	STATE DIST	COUNTY
TEXAS	LAREDO	WEBB
CONT	SECT / JOB	HIGHWAY NO
0018	05 / 062, ETC	IH 35

DATE	BY	REV	REVISION
02/17/04	AA	1	MAINLANE SHLDR WIDEN REV EDGE OF PAVEMENT AND PAVEMENT LIMITS

REF FILE(S): j01lop01.uti, uti LV ON = 1-63
j01lop01.eop, eop LV ON = 1-17,19-63
j01lop01.bck, bck LV ON = 2,9,10,14,17,20,21,25,28
j01lop01.alg, alg LV ON = 1-6,35-39
j01lop01.bdr, bdr LV ON = 14,31,45,50,57,58,60-62
j01lop01.spm, spm LV ON = 1-63
miloint.row, row LV ON = 1-22,24-63

b22lop21.dgn-09 HOUFILE023 \hcivil\cf0130\ 3/4/2004

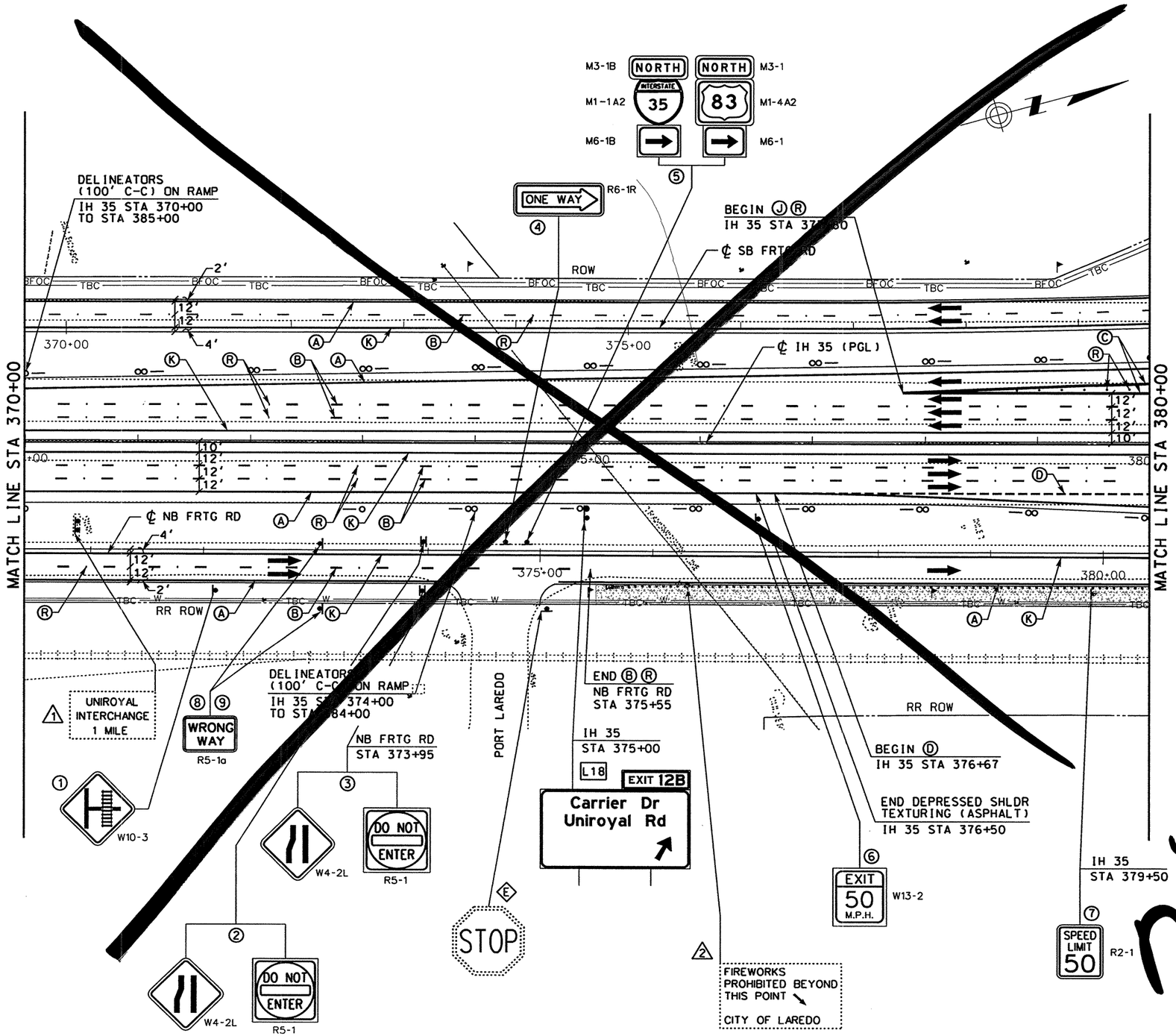

STRIPING LEGEND

- Ⓐ REFL PAV MRK TY I & II (W)(SLD)(4")
- Ⓑ REFL PAV MRK TY I & II (W)(BRK)(4")
- Ⓒ REFL PAV MRK TY I & II (W)(SLD)(8")
- Ⓓ REFL PAV MRK TY I & II (W)(DOT)(4")
- Ⓔ REFL PAV MRK TY I & II (W)(SLD)(12")
- Ⓕ REFL PAV MRK TY I & II (W)(SLD)(24")
- Ⓛ REFL PAV MRK TY I & II (W)(LNDP)(12")
- Ⓖ REFL PAV MRK TY I & II (W)(ARROW)
- Ⓗ REFL PAV MRK TY I & II (W)(DBL ARROW)
- Ⓣ REFL PAV MRK TY I & II (W)(TND ARROW)
- Ⓘ REFL PAV MRK TY I & II (W)(WORD)
- Ⓙ REFL PAV MRK TY I & II (W)(ENT GORE)
- Ⓚ REFL PAV MRK TY I & II (Y)(SLD)(4")
- Ⓜ REFL PAV MRK TY I & II (Y)(SLD)(8")
- Ⓝ REFL PAV MRK TY I & II (Y)(SLD)(12")
- Ⓢ REFL PAV MRK TY I & II (Y)(SLD)(24")
- Ⓞ RAIS PAV MRKR CL B (REFL) TY I-A
- Ⓡ RAIS PAV MRKR CL B (REFL) TY II-C-R
- Ⓠ RAIS PAV MRKR CL B (REFL) TY II-A-A

SIGNING AND DELINEATION LEGEND

- TRAFFIC FLOW ARROWS (PROPOSED)
- TRAFFIC FLOW ARROWS (EXISTING)
- (#) SMALL SIGN TO BE INSTALLED ITEM (644)
- (E) SIGN TO REMAIN IN PLACE
- (#) SIGN TO BE REMOVED ITEM (649)
- (#) SIGN TO BE RELOCATED (ITEM 649)
- [L#] LARGE SIGN TO BE INSTALLED
- SIGN POST FOR SMALL SIGN
- DOUBLE POSTED SIGN
- SIGN POST, BACK TO BACK SMALL SIGNS
- "K" MARKER
- DELINEATOR (D-SW) (A)
- DELINEATOR (D-SY) (A)
- DELINEATOR (D-DW) (A)
- OBJECT MARKER (OM-2VP)
- OBJECT MARKER (OM-2SR)
- OBJECT MARKER (OB-3B)

See next

0 50 100
SCALE: 1" = 100'

STATE OF TEXAS
SIDNEY S. AFONSO
P.E. 88055
REGISTERED PROFESSIONAL ENGINEER

THE SEAL APPEARING ON THIS DOCUMENT WAS AUTHORIZED BY SIDNEY S. AFONSO PE 88055, ON MAY 30, 2003

KBR
Engineered by KBR Technical Services, Inc

©2003 Texas Department of Transportation

IH 35
LOOP 20 TO UNIROYAL ROAD
SIGNING AND PAVEMENT MARKINGS
STA 370+00 TO
STA 380+00

SHEET 25 OF 33

FED RD DIV NO	FEDERAL AID PROJECT NO		SHEET NO
6	NH-2002 (79)		794
STATE	STATE DIST		COUNTY
TEXAS	LAREDO		WEBB
CONT	SECT	JOB	HIGHWAY NO
0018	05	062, ETC	IH 35

6/2/2003
HOUFILE023 \hcivil\cf0130\
b22lop22.dgn-15

REF FILE(S): j011op01.bdr, bdr LV ON = 14,31,45,50,57,58,60-62
j011op01.alg, alg LV ON = 1-6,35-39
j011op01.bck, bck LV ON = 2,9,10,14,17,20,21,25,28
j011op01.eop, eop LV ON = 1-17,19-63
j011op01.uti, uti LV ON = 1-63
j011op01.row, row LV ON = 1-22,24-63
j011op01.spm, spm LV ON = 1-63
milaint.row, row

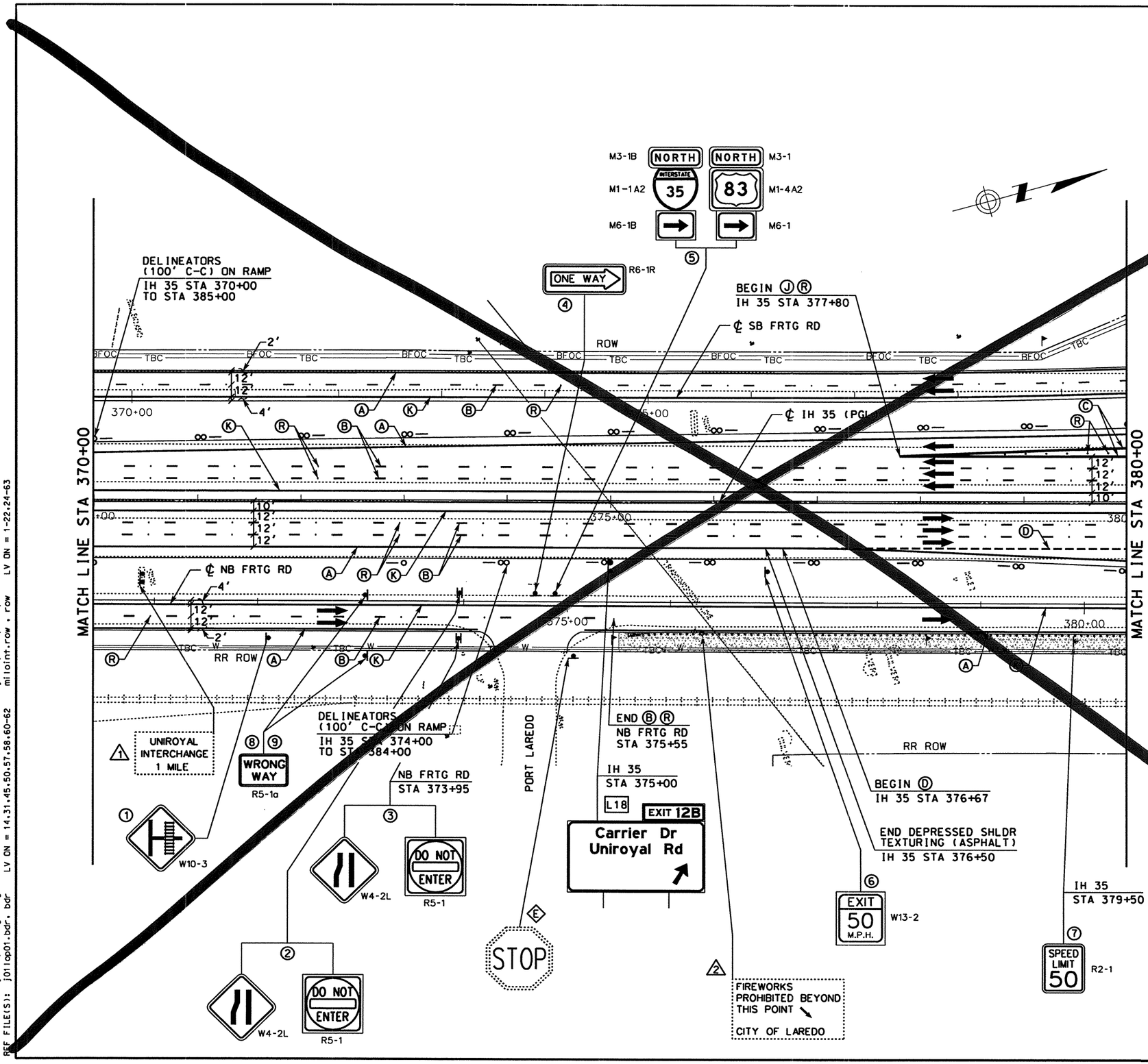

STRIPING LEGEND

- Ⓐ REFL PAV MRK TY I & II (W)(SLD)(4")
- Ⓑ REFL PAV MRK TY I & II (W)(BRK)(4")
- Ⓒ REFL PAV MRK TY I & II (W)(SLD)(8")
- Ⓓ REFL PAV MRK TY I & II (W)(DOT)(4")
- Ⓔ REFL PAV MRK TY I & II (W)(SLD)(12")
- Ⓕ REFL PAV MRK TY I & II (W)(SLD)(24")
- Ⓛ REFL PAV MRK TY I & II (W)(LNDP)(12")
- Ⓖ REFL PAV MRK TY I & II (W)(ARROW)
- Ⓗ REFL PAV MRK TY I & II (W)(DBL ARROW)
- Ⓣ REFL PAV MRK TY I & II (W)(TND ARROW)
- Ⓘ REFL PAV MRK TY I & II (W)(WORD)
- Ⓙ REFL PAV MRK TY I & II (W)(ENT GORE)
- Ⓚ REFL PAV MRK TY I & II (Y)(SLD)(4")
- Ⓜ REFL PAV MRK TY I & II (Y)(SLD)(8")
- Ⓝ REFL PAV MRK TY I & II (Y)(SLD)(12")
- Ⓢ REFL PAV MRK TY I & II (Y)(SLD)(24")
- Ⓓ RAIS PAV MRKR CL B (REFL) TY I-A
- Ⓡ RAIS PAV MRKR CL B (REFL) TY II-C-R
- Ⓞ RAIS PAV MRKR CL B (REFL) TY II-A-A

SIGNING AND DELINEATION LEGEND

- TRAFFIC FLOW ARROWS (PROPOSED)
- TRAFFIC FLOW ARROWS (EXISTING)
- # SMALL SIGN TO BE INSTALLED ITEM (644)
- Ⓔ SIGN TO REMAIN IN PLACE
- # SIGN TO BE REMOVED ITEM (649)
- # SIGN TO BE RELOCATED (ITEM 649)
- L# LARGE SIGN TO BE INSTALLED
- SIGN POST FOR SMALL SIGN
- DOUBLE POSTED SIGN
- SIGN POST, BACK TO BACK SMALL SIGNS
- "K" MARKER
- DELINEATOR (D-SW) (A)
- DELINEATOR (D-SY) (A)
- DELINEATOR (D-DW) (A)
- OBJECT MARKER (OM-2VP)
- OBJECT MARKER (OM-2SR)
- OBJECT MARKER (OB-3B)

0 50 100
SCALE: 1" = 100'

STATE OF TEXAS
SIDNEY S. AFONSO
88055
REGISTERED PROFESSIONAL ENGINEER

THE SEAL APPEARING ON THIS DOCUMENT WAS AUTHORIZED BY SIDNEY S. AFONSO PE 88055, ON MARCH 05, 2004

Sidney Afonso

3/4/2004

KBR
Engineered by KBR Technical Services, Inc

©2003 Texas Department of Transportation

IH 35
LOOP 20 TO UNIROYAL ROAD
SIGNING AND PAVEMENT MARKINGS
STA 370+00 TO STA 380+00

SHEET 25 OF 33

FED RD DIV NO	FEDERAL AID PROJECT NO	SHEET NO
6	NH-20[illegible] (79)	794
STATE	STATE [illegible]	COUNTY
TEXAS	LAREDO	WEBB
CONT / SECT / JOB		HIGHWAY NO
0018 / 05 / 062, ETC		IH 35

DATE	BY	REV	REVISION
02/17/04	AA	1	MAINLANE SHLDR WIDEN REV EDGE OF PAVEMENT AND PAVEMENT LIMITS

REF FILE(S): j011op01.uti: uti LV ON = 1-63
j011op01.eop: eop LV ON = 1-17.19-63
j011op01.bck: bck LV ON = 2.9.10.14.17.20.21.25.28
j011op01.alg: alg LV ON = 1-6.35-39
j011op01.bdr: bdr LV ON = 14.31.45.50.57.58.60-62
j011op01.spm: spm LV ON = 1-63
milpoint.row: row LV ON = 1-22.24-63

HOUFILE023 \hcivil\cf0130\ b22lop22.dgn-15

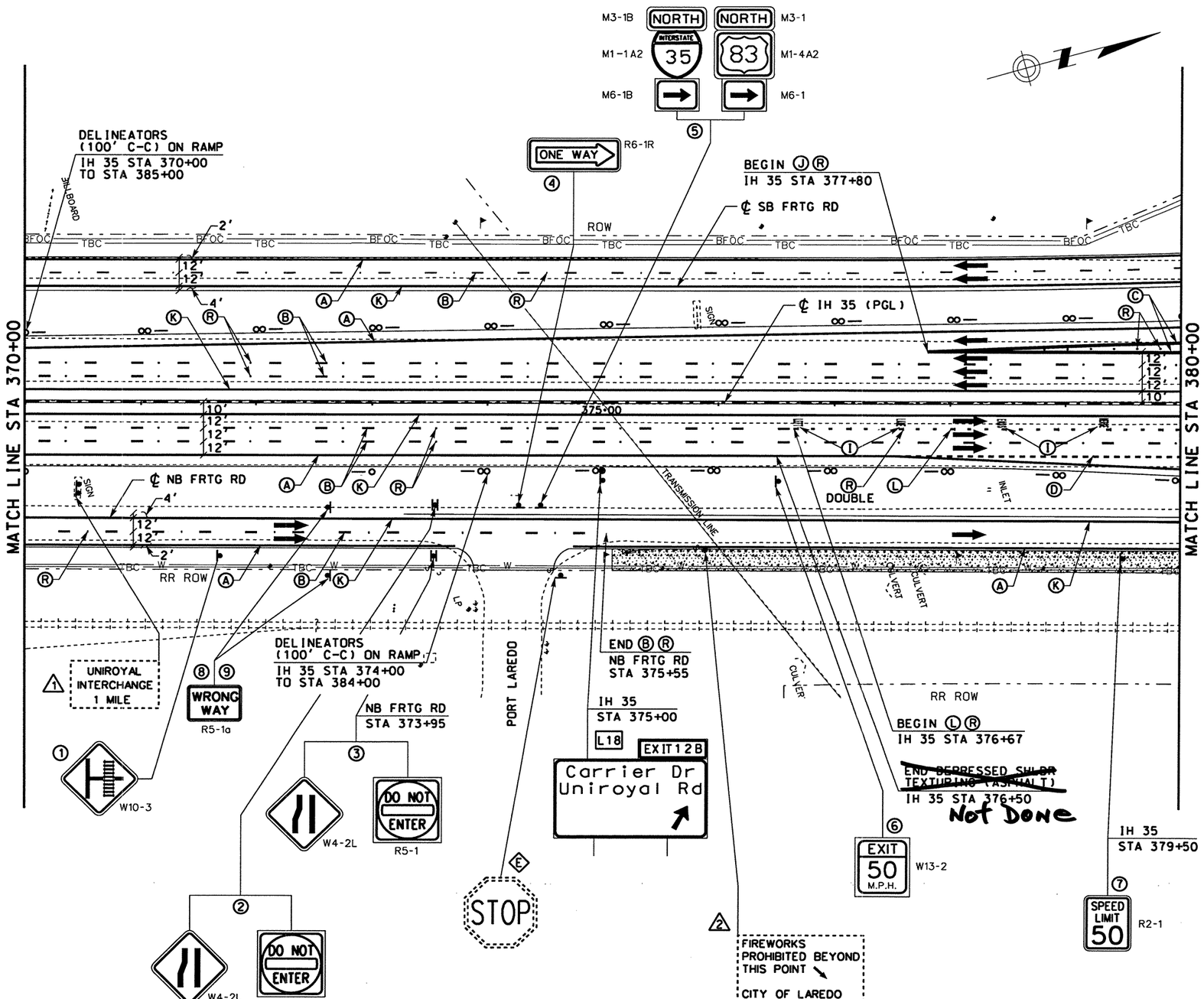

STRIPING LEGEND

- Ⓐ REFL PAV MRK TY I & II (W)(SLD)(4")
- Ⓑ REFL PAV MRK TY I & II (W)(BRK)(4")
- Ⓒ REFL PAV MRK TY I & II (W)(SLD)(8")
- Ⓓ REFL PAV MRK TY I & II (W)(DOT)(4")
- Ⓔ REFL PAV MRK TY I & II (W)(SLD)(12")
- Ⓕ REFL PAV MRK TY I & II (W)(SLD)(24")
- Ⓛ REFL PAV MRK TY I & II (W)(LNDP)(12")
- Ⓖ REFL PAV MRK TY I & II (W)(ARROW)
- Ⓗ REFL PAV MRK TY I & II (W)(DBL ARROW)
- Ⓣ REFL PAV MRK TY I & II (W)(TND ARROW)
- Ⓘ REFL PAV MRK TY I & II (W)(WORD)
- Ⓙ REFL PAV MRK TY I & II (W)(ENT GORE)
- Ⓚ REFL PAV MRK TY I & II (Y)(SLD)(4")
- Ⓜ REFL PAV MRK TY I & II (Y)(SLD)(8")
- Ⓝ REFL PAV MRK TY I & II (Y)(SLD)(12")
- Ⓢ REFL PAV MRK TY I & II (Y)(SLD)(24")
- Ⓟ RAIS PAV MRKR CL B (REFL) TY I-A
- Ⓡ RAIS PAV MRKR CL B (REFL) TY II-C-R
- Ⓞ RAIS PAV MRKR CL B (REFL) TY II-A-A

SIGNING AND DELINEATION LEGEND

- TRAFFIC FLOW ARROWS ~~(PROPOSED)~~
- TRAFFIC FLOW ARROWS (EXISTING)
- (#) SMALL SIGN TO BE INSTALLED ITEM (644)
- (E) SIGN TO REMAIN IN PLACE
- (#) SIGN TO BE REMOVED ITEM (649)
- (#) SIGN TO BE RELOCATED (ITEM 649)
- [L#] LARGE SIGN TO BE INSTALLED
- SIGN POST FOR SMALL SIGN
- DOUBLE POSTED SIGN
- SIGN POST, BACK TO BACK SMALL SIGNS
- "K" MARKER
- DELINEATOR (D-SW) (A)
- DELINEATOR (D-SY) (A)
- DELINEATOR (D-DW) (A)
- OBJECT MARKER (OM-2VP)
- OBJECT MARKER (OM-2SR)
- OBJECT MARKER (OB-3B)

STATE OF TEXAS
JAIME A. VELA, JR.
92045
LICENSED
PROFESSIONAL ENGINEER

The seal appearing on this document was authorized by JAIME A. VELA, JR. P.E. 92045, on 12/05 20 06

Jaime A. Vela, P.E.

HORIZ: 1" = 100'

TEXAS DEPARTMENT OF TRANSPORTATION
© 2006

IH35
LOOP 20 TO UNIROYAL ROAD
SIGNING AND PAVEMENT
MARKINGS

DN: JAV DW: OJC
CK: JAV CK: RM

FED.RD. DIV.NO.	STATE PROJECT NO.				SHEET NO.
6	NH 2002 (79)	SHEET 25 OF 33			794
STATE	STATE DIST.NO.	COUNTY	CONTROL	SECTION	JOB	HIGHWAY NO.
TEXAS	22	WEBB	0018	05	062	IH 35

12/4/2006 ocostil t:\projects\vno-csj assigned\uniroyal_interchange\signing&pavement marking\b22lop22.dgn

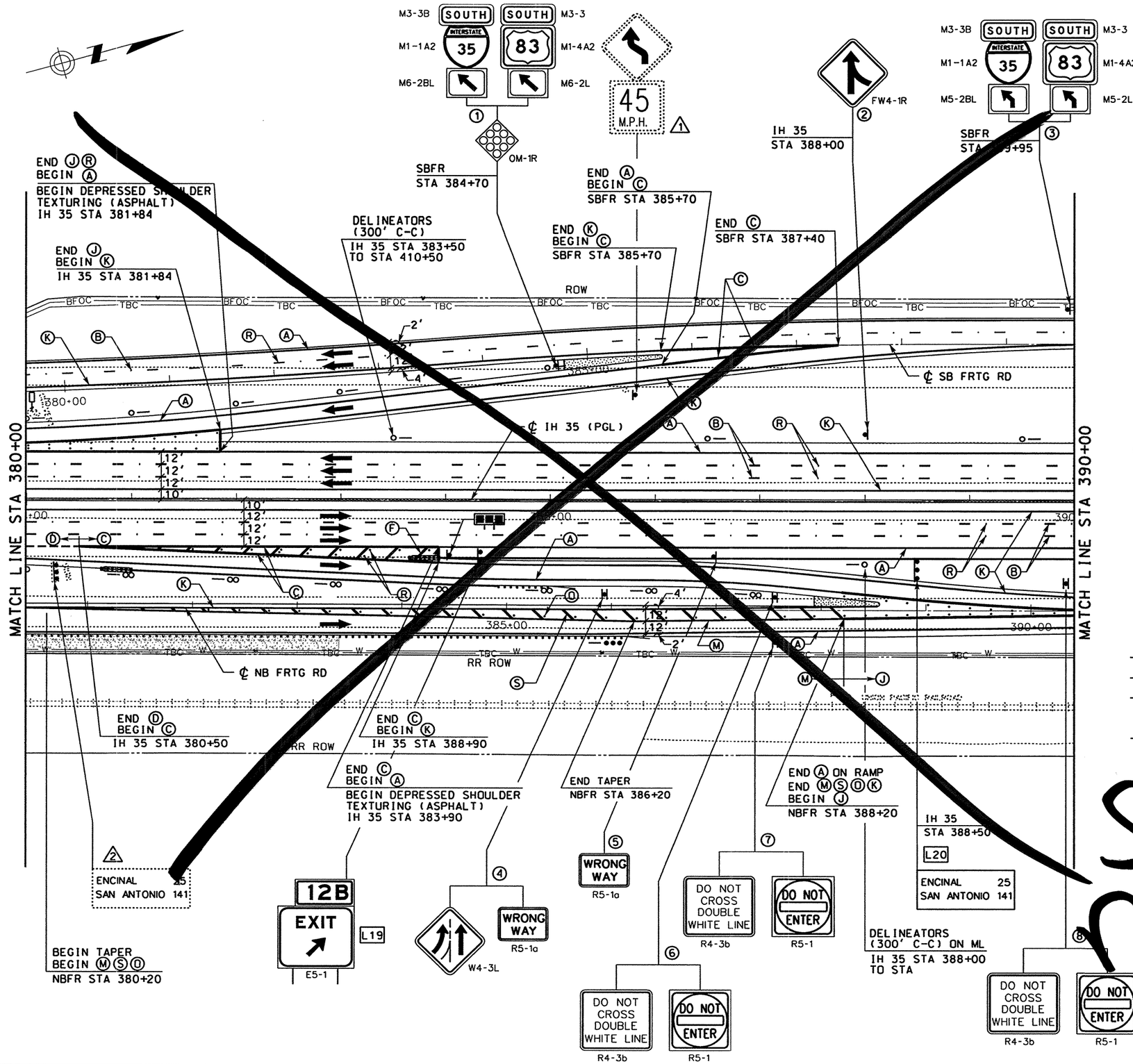

See next

STRIPING LEGEND

- Ⓐ REFL PAV MRK TY I & II (W)(SLD)(4")
- Ⓑ REFL PAV MRK TY I & II (W)(BRK)(4")
- Ⓒ REFL PAV MRK TY I & II (W)(SLD)(8")
- Ⓓ REFL PAV MRK TY I & II (W)(DOT)(4")
- Ⓔ REFL PAV MRK TY I & II (W)(SLD)(12")
- Ⓕ REFL PAV MRK TY I & II (W)(SLD)(24")
- Ⓛ REFL PAV MRK TY I & II (W)(LNDP)(12")
- Ⓖ REFL PAV MRK TY I & II (W)(ARROW)
- Ⓗ REFL PAV MRK TY I & II (W)(DBL ARROW)
- Ⓣ REFL PAV MRK TY I & II (W)(TND ARROW)
- Ⓘ REFL PAV MRK TY I & II (W)(WORD)
- Ⓙ REFL PAV MRK TY I & II (W)(ENT GORE)
- Ⓚ REFL PAV MRK TY I & II (Y)(SLD)(4")
- Ⓜ REFL PAV MRK TY I & II (Y)(SLD)(8")
- Ⓝ REFL PAV MRK TY I & II (Y)(SLD)(12")
- Ⓢ REFL PAV MRK TY I & II (Y)(SLD)(24")
- Ⓓ RAIS PAV MRKR CL B (REFL) TY I-A
- Ⓡ RAIS PAV MRKR CL B (REFL) TY II-C-R
- Ⓞ RAIS PAV MRKR CL B (REFL) TY II-A-A

SIGNING AND DELINEATION LEGEND

- TRAFFIC FLOW ARROWS (PROPOSED)
- TRAFFIC FLOW ARROWS (EXISTING)
- # SMALL SIGN TO BE INSTALLED ITEM (644)
- Ⓔ SIGN TO REMAIN IN PLACE
- △# SIGN TO BE REMOVED ITEM (649)
- ◇# SIGN TO BE RELOCATED (ITEM 649)
- L# LARGE SIGN TO BE INSTALLED
- SIGN POST FOR SMALL SIGN
- DOUBLE POSTED SIGN
- SIGN POST, BACK TO BACK SMALL SIGNS
- "K" MARKER
- DELINEATOR (D-SW) (A)
- DELINEATOR (D-SY) (A)
- DELINEATOR (D-DW) (A)
- OBJECT MARKER (OM-2VP)
- OBJECT MARKER (OM-2SR)
- OBJECT MARKER (OB-3B)

0 50 100
SCALE: 1" = 100'

STATE OF TEXAS
SIDNEY S. AFONSO
PE 88055
REGISTERED PROFESSIONAL ENGINEER

THE SEAL APPEARING ON THIS DOCUMENT WAS AUTHORIZED BY SIDNEY S. AFONSO PE 88055, ON MAY 30, 2003

KBR
Engineered by KBR Technical Services, Inc

©2003 Texas Department of Transportation

IH 35
LOOP 20 TO UNIROYAL ROAD
SIGNING AND PAVEMENT MARKINGS
STA 380+00 TO
STA 390+00

SHEET 26 OF 33

FED RD DIV NO	FEDERAL AID PROJECT NO		SHEET NO
6	NH-2002 (79)		795
STATE	STATE DIST		COUNTY
TEXAS	LAREDO		WEBB
CONT	SECT	JOB	HIGHWAY NO
0018	05	062, ETC	IH 35

REF FILE(S): j011op01.uti, uti LV ON = 1-63
j011op01.eop, eop LV ON = 1-17,19-63
j011op01.bck, bck LV ON = 2,9,10,14,17,20,21,25,28
j011op01.alg, alg LV ON = 1-6,35-39
j011op01.bdr, bdr LV ON = 14,31,45,50,57,58,60-62
j011op01.spm, spm LV ON = 1-63
milpoint.row, row LV ON = 1-22,24-63

6/2/2003
HOUFILE023 \hciwi\cf0130\
b2llop23.dgn-07

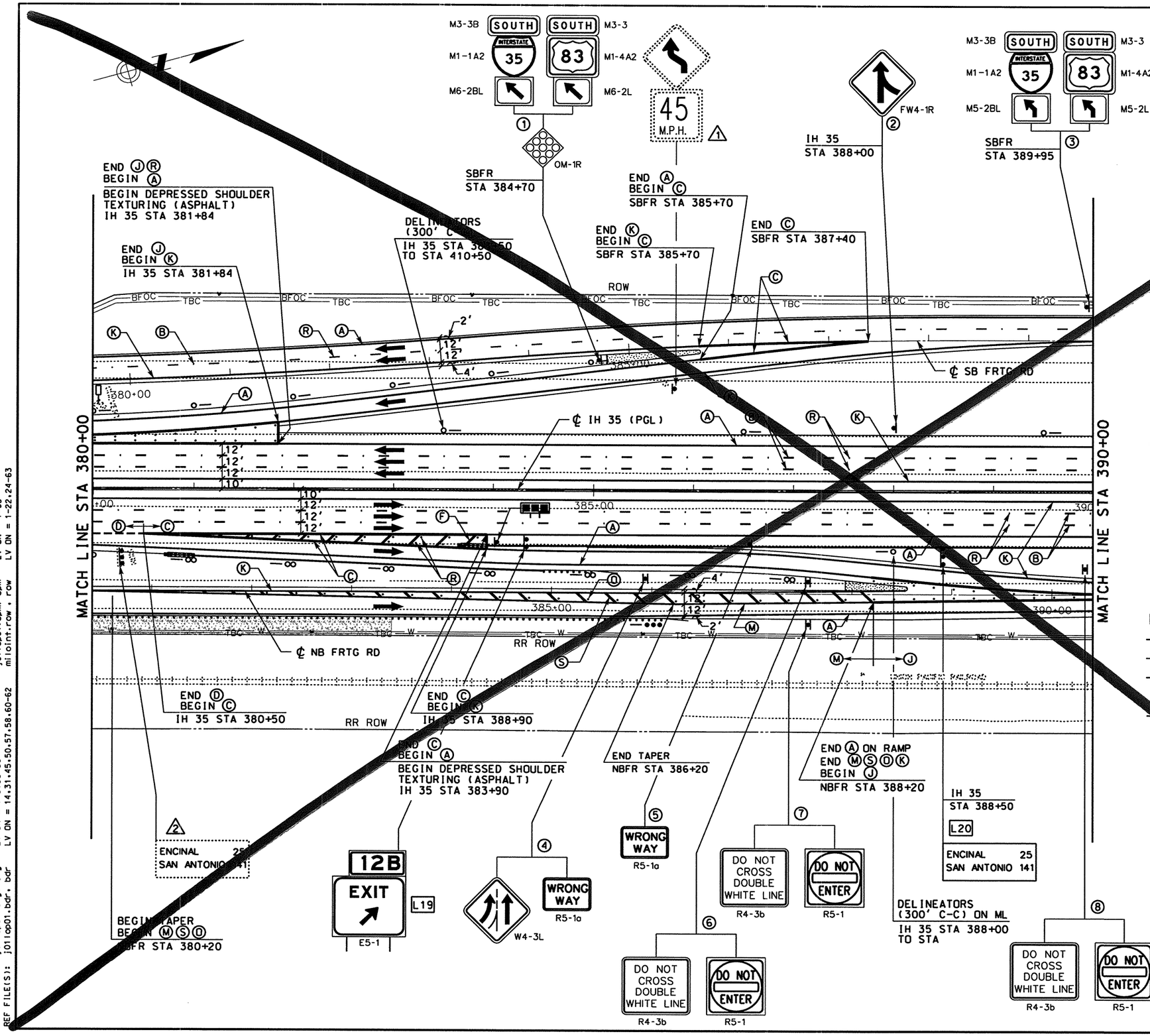

STRIPING LEGEND

- Ⓐ REFL PAV MRK TY I & II (W)(SLD)(4")
- Ⓑ REFL PAV MRK TY I & II (W)(BRK)(4")
- Ⓒ REFL PAV MRK TY I & II (W)(SLD)(8")
- Ⓓ REFL PAV MRK TY I & II (W)(DDL)(4")
- Ⓔ REFL PAV MRK TY I & II (W)(SLD)(12")
- Ⓕ REFL PAV MRK TY I & II (W)(SLD)(24")
- Ⓛ REFL PAV MRK TY I & II (W)(LNDP)(12")
- Ⓖ REFL PAV MRK TY I & II (W)(ARROW)
- Ⓗ REFL PAV MRK TY I & II (W)(DBL ARROW)
- Ⓣ REFL PAV MRK TY I & II (W)(TND ARROW)
- Ⓘ REFL PAV MRK TY I & II (W)(WORD)
- Ⓙ REFL PAV MRK TY I & II (W)(ENT GORE)
- Ⓚ REFL PAV MRK TY I & II (Y)(SLD)(4")
- Ⓜ REFL PAV MRK TY I & II (Y)(SLD)(8")
- Ⓝ REFL PAV MRK TY I & II (Y)(SLD)(12")
- Ⓢ REFL PAV MRK TY I & II (Y)(SLD)(24")
- Ⓓ RAIS PAV MRKR CL B (REFL) TY I-A
- Ⓡ RAIS PAV MRKR CL B (REFL) TY II-C-R
- Ⓞ RAIS PAV MRKR CL B (REFL) TY II-A-A

SIGNING AND DELINEATION LEGEND

- TRAFFIC FLOW ARROWS (PROPOSED)
- TRAFFIC FLOW ARROWS (EXISTING)
- (#) SMALL SIGN TO BE INSTALLED ITEM (644)
- (E) SIGN TO REMAIN IN PLACE
- (#) SIGN TO BE REMOVED ITEM (649)
- (#) SIGN TO BE RELOCATED (ITEM 649)
- [L#] LARGE SIGN TO BE INSTALLED
- SIGN POST FOR SMALL SIGN
- DOUBLE POSTED SIGN
- SIGN POST, BACK TO BACK SMALL SIGNS
- "K" MARKER
- DELINEATOR (D-SW) (A)
- DELINEATOR (D-SY) (A)
- DELINEATOR (D-DW) (A)
- OBJECT MARKER (OM-2VP)
- OBJECT MARKER (OM-2SR)
- OBJECT MARKER (OB-3B)

0 50 100
SCALE: 1" = 100'

STATE OF TEXAS
SIDNEY S. AFONSO
R. 88055
REGISTERED PROFESSIONAL ENGINEER

THE SEAL APPEARING ON THIS DOCUMENT WAS AUTHORIZED BY SIDNEY S. AFONSO PE 88055, ON MARCH 05, 2004

Sidney Afonso

3/4/2004

KBR
Engineered by KBR Technical Services, Inc

©2003 Texas Department of Transportation

IH 35
LOOP 20 TO UNIROYAL ROAD
SIGNING AND PAVEMENT MARKINGS
STA 380+00 TO
STA 390+00
SHEET 26 OF 33

FED RD DIV NO	FEDERAL AID PROJECT	SHEET NO
6	NH-2002 (79)	795
STATE	STATE DIST	COUNTY
TEXAS	LAREDO	WEBB
CONT / SECT / JOB		HIGHWAY
0018 / 05 / 062, ETC		IH 35

DATE	BY	REV	REVISION
02/17/04	AA	1	MAINLANE SHLDR WIDEN REV EDGE OF PAVEMENT AND PAVEMENT LIMITS

REF FILES(s): j01lop01.uti, uti LV ON = 1-63
j01lop01.eop, eop LV ON = 1-17,19-63
j01lop01.bck, bck LV ON = 2-9,10,14,17,20,21,25,28
j01lop01.alg, alg LV ON = 1-6,35-39
j01lop01.bdr, bdr LV ON = 14,31,45,50,57,58,60-62
j01lop01.spm, spm LV ON = 1-63
milointr.row, row LV ON = 1-22,24-63

HOUFILE023 \hcivil\cf0130\ 622lop23.dgn-07

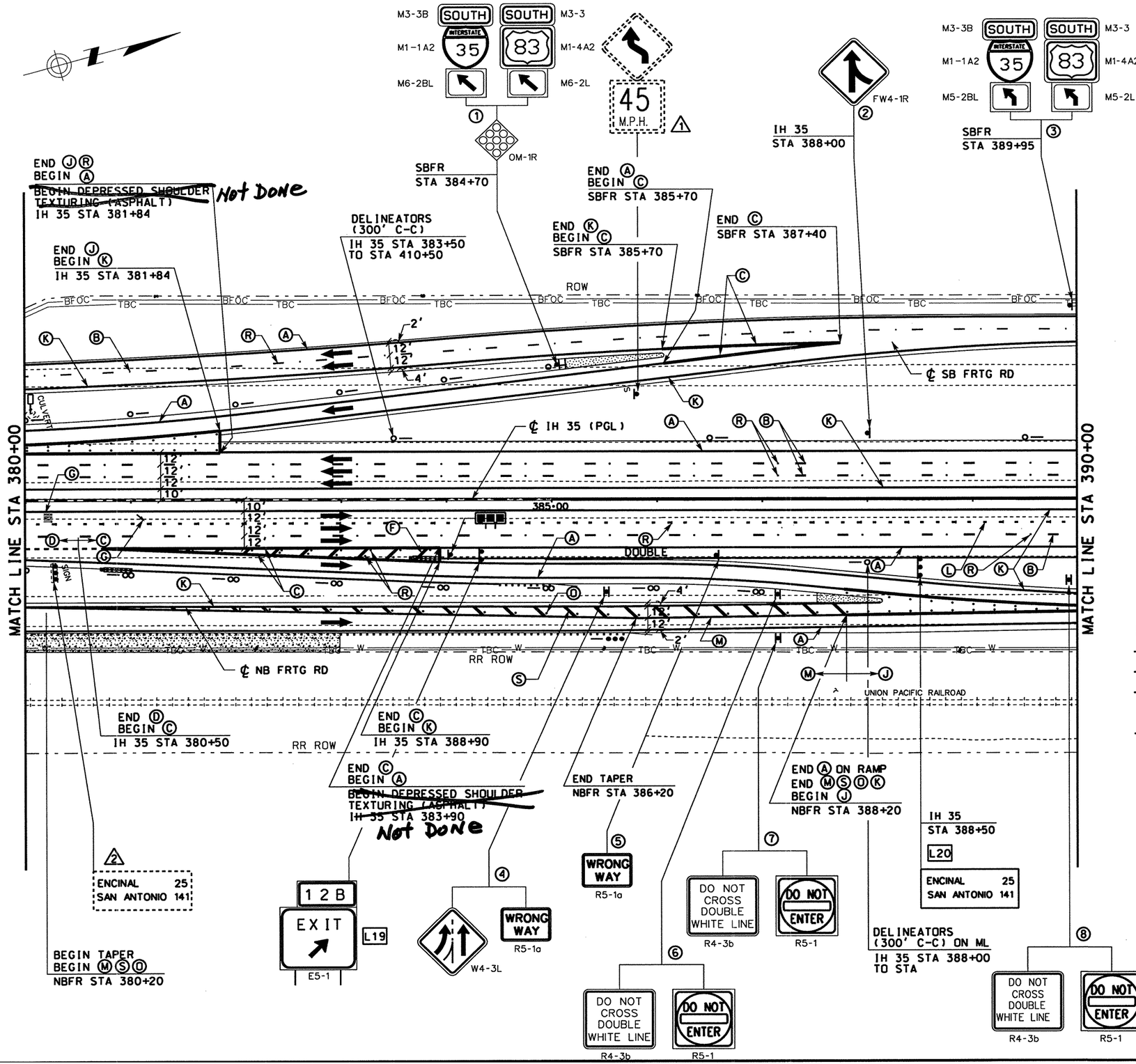

STRIPING LEGEND

- Ⓐ REFL PAV MRK TY I & II (W)(SLD)(4")
- Ⓑ REFL PAV MRK TY I & II (W)(BRK)(4")
- Ⓒ REFL PAV MRK TY I & II (W)(SLD)(8")
- Ⓓ REFL PAV MRK TY I & II (W)(DOT)(4")
- Ⓔ REFL PAV MRK TY I & II (W)(SLD)(12")
- Ⓕ REFL PAV MRK TY I & II (W)(SLD)(24")
- Ⓛ REFL PAV MRK TY I & II (W)(LNDP)(12")
- Ⓖ REFL PAV MRK TY I & II (W)(ARROW)
- Ⓗ REFL PAV MRK TY I & II (W)(DBL ARROW)
- Ⓣ REFL PAV MRK TY I & II (W)(TND ARROW)
- Ⓘ REFL PAV MRK TY I & II (W)(WORD)
- Ⓙ REFL PAV MRK TY I & II (W)(ENT GORE)
- Ⓚ REFL PAV MRK TY I & II (Y)(SLD)(4")
- Ⓜ REFL PAV MRK TY I & II (Y)(SLD)(8")
- Ⓝ REFL PAV MRK TY I & II (Y)(SLD)(12")
- Ⓢ REFL PAV MRK TY I & II (Y)(SLD)(24")
- Ⓓ RAIS PAV MRKR CL B (REFL) TY I-A
- Ⓡ RAIS PAV MRKR CL B (REFL) TY II-C-R
- Ⓞ RAIS PAV MRKR CL B (REFL) TY II-A-A

SIGNING AND DELINEATION LEGEND

- TRAFFIC FLOW ARROWS ~~(PROPOSED)~~
- TRAFFIC FLOW ARROWS (EXISTING)
- (#) SMALL SIGN TO BE INSTALLED ITEM (644)
- (E) SIGN TO REMAIN IN PLACE
- (#) SIGN TO BE REMOVED ITEM (649)
- (#) SIGN TO BE RELOCATED (ITEM 649)
- [L#] LARGE SIGN TO BE INSTALLED
- SIGN POST FOR SMALL SIGN
- DOUBLE POSTED SIGN
- SIGN POST, BACK TO BACK SMALL SIGNS
- "K" MARKER
- DELINEATOR (D-SW) (A)
- DELINEATOR (D-SY) (A)
- DELINEATOR (D-DW) (A)
- OBJECT MARKER (OM-2VP)
- OBJECT MARKER (OM-2SR)
- OBJECT MARKER (OB-3B)

STATE OF TEXAS
JAIME A. VELA, JR.
92045
LICENSED PROFESSIONAL ENGINEER

The seal appearing on this document was authorized by JAIME A. VELA, JR. P.E. 92045, on 12/05, 20 06

Jaime A. Vela, Jr., P.E.

HORIZ: 1" = 100'

TEXAS DEPARTMENT OF TRANSPORTATION
© 2006

IH35
LOOP 20 TO UNIROYAL ROAD
SIGNING AND PAVEMENT MARKINGS

DN: JAV	DW: OJC
CK: JAV	CK: RM

FED.RD. DIV.NO.	STATE PROJECT NO.					SHEET NO.
6	NH 2002 (79)		SHEET 26 OF 33			795
STATE	STATE DIST.NO.	COUNTY	CONTROL	SECTION	JOB	HIGHWAY NO.
TEXAS	22	WEBB	0018	05	062	IH 35

11/30/2006 ocostil t:\projects\no-csj assigned\uniroyal_interchange\signing&pavement marking\b22lop23.dgn

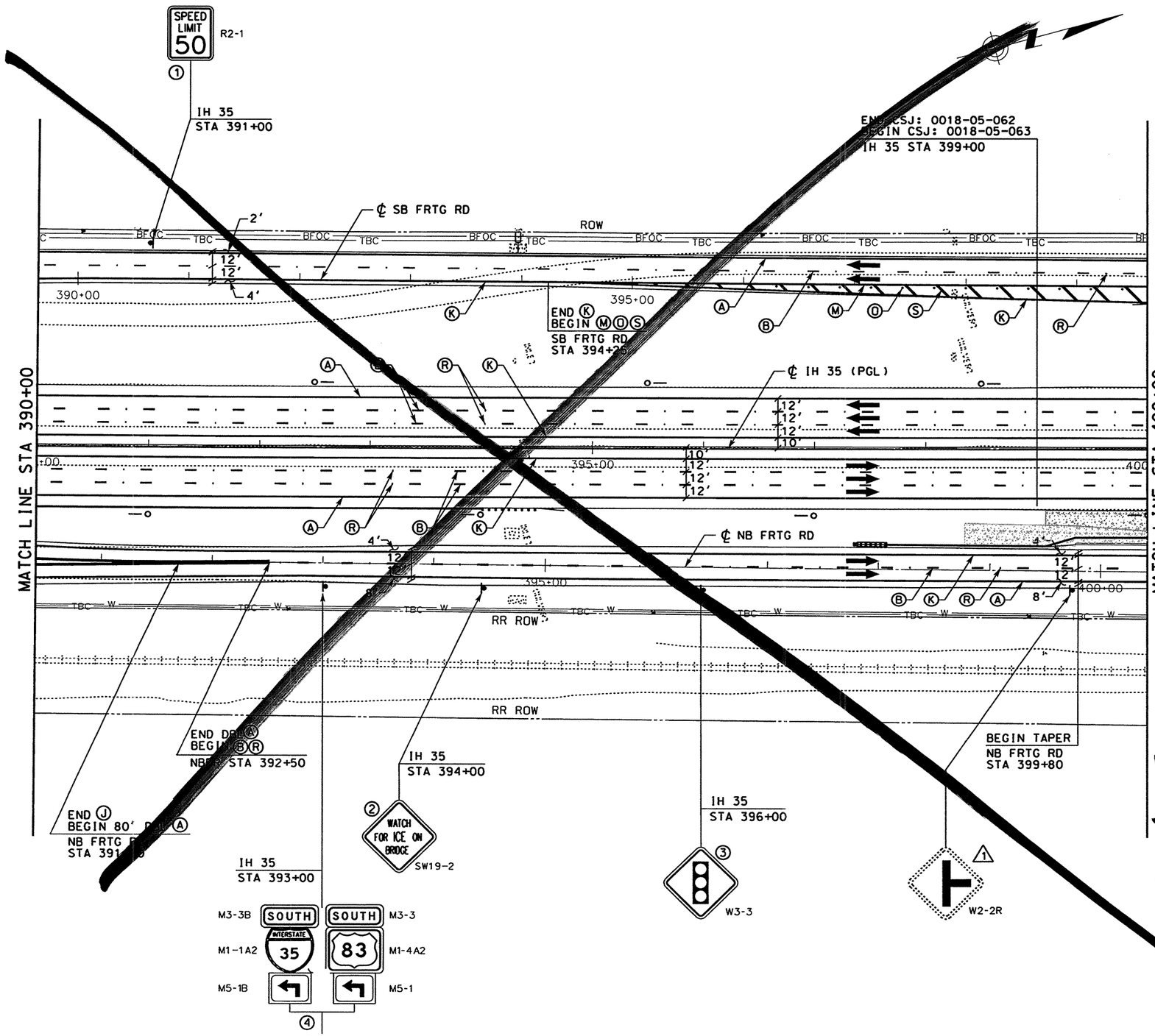

STRIPING LEGEND

- (A) REFL PAV MRK TY I & II (W)(SLD)(4")
- (B) REFL PAV MRK TY I & II (W)(BRK)(4")
- (C) REFL PAV MRK TY I & II (W)(SLD)(8")
- (D) REFL PAV MRK TY I & II (W)(DOT)(4")
- (E) REFL PAV MRK TY I & II (W)(SLD)(12")
- (F) REFL PAV MRK TY I & II (W)(SLD)(24")
- (L) REFL PAV MRK TY I & II (W)(LNDP)(12")
- (G) REFL PAV MRK TY I & II (W)(ARROW)
- (H) REFL PAV MRK TY I & II (W)(DBL ARROW)
- (T) REFL PAV MRK TY I & II (W)(TND ARROW)
- (I) REFL PAV MRK TY I & II (W)(WORD)
- (J) REFL PAV MRK TY I & II (W)(ENT GORE)
- (K) REFL PAV MRK TY I & II (Y)(SLD)(4")
- (M) REFL PAV MRK TY I & II (Y)(SLD)(8")
- (N) REFL PAV MRK TY I & II (Y)(SLD)(12")
- (S) REFL PAV MRK TY I & II (Y)(SLD)(24")
- (D) RAIS PAV MRKR CL B (REFL) TY I-A
- (R) RAIS PAV MRKR CL B (REFL) TY II-C-R
- (O) RAIS PAV MRKR CL B (REFL) TY II-A-A

SIGNING AND DELINEATION LEGEND

- TRAFFIC FLOW ARROWS (PROPOSED)
- TRAFFIC FLOW ARROWS (EXISTING)
- (#) SMALL SIGN TO BE INSTALLED ITEM (644)
- (E) SIGN TO REMAIN IN PLACE
- (#) SIGN TO BE REMOVED ITEM (649)
- (#) SIGN TO BE RELOCATED (ITEM 649)
- [L#] LARGE SIGN TO BE INSTALLED
- SIGN POST FOR SMALL SIGN
- DOUBLE POSTED SIGN
- SIGN POST, BACK TO BACK SMALL SIGNS
- "K" MARKER
- DELINEATOR (D-SW) (A)
- DELINEATOR (D-SY) (A)
- DELINEATOR (D-DW) (A)
- OBJECT MARKER (OM-2VP)
- OBJECT MARKER (OM-2SR)
- OBJECT MARKER (OB-3B)

see next

0 50 100
SCALE: 1" = 100'

STATE OF TEXAS
SIDNEY S. AFONSO
88055
REGISTERED PROFESSIONAL ENGINEER

THE SEAL APPEARING ON THIS DOCUMENT WAS AUTHORIZED BY SIDNEY S. AFONSO PE 88055, ON MAY 30, 2003

KBR
Engineered by KBR Technical Services, Inc

©2003 Texas Department of Transportation

IH 35
LOOP 20 TO UNIROYAL ROAD
SIGNING AND PAVEMENT MARKINGS
STA 390+00 TO
STA 400+00

SHEET 27 OF 33

FED RD DIV NO	FEDERAL AID PROJECT NO		SHEET NO
6	NH-2002 (79)		796
STATE	STATE DIST		COUNTY
TEXAS	LAREDO		WEBB
CONT	SECT	JOB	HIGHWAY NO
0018	05	062, ETC	IH 35

6/2/2003
HOUFILE023 \hciwi\cf0130\
b22lop24.dgn-14

REF FILE(S): j01lop01.uti, uti LV ON = 1-63
j01lop01.eop, eop LV ON = 1-17,19-63
j01lop01.bck, bck LV ON = 2,9,10,14,17,20,21,25,28
j01lop01.alg, alg LV ON = 1-6,35-39
j01lop01.bdr, bdr LV ON = 14,31,45,50,57,58,60-62
j01lop01.spm, spm LV ON = 1-63
milointr.row, row LV ON = 1-22,24-63

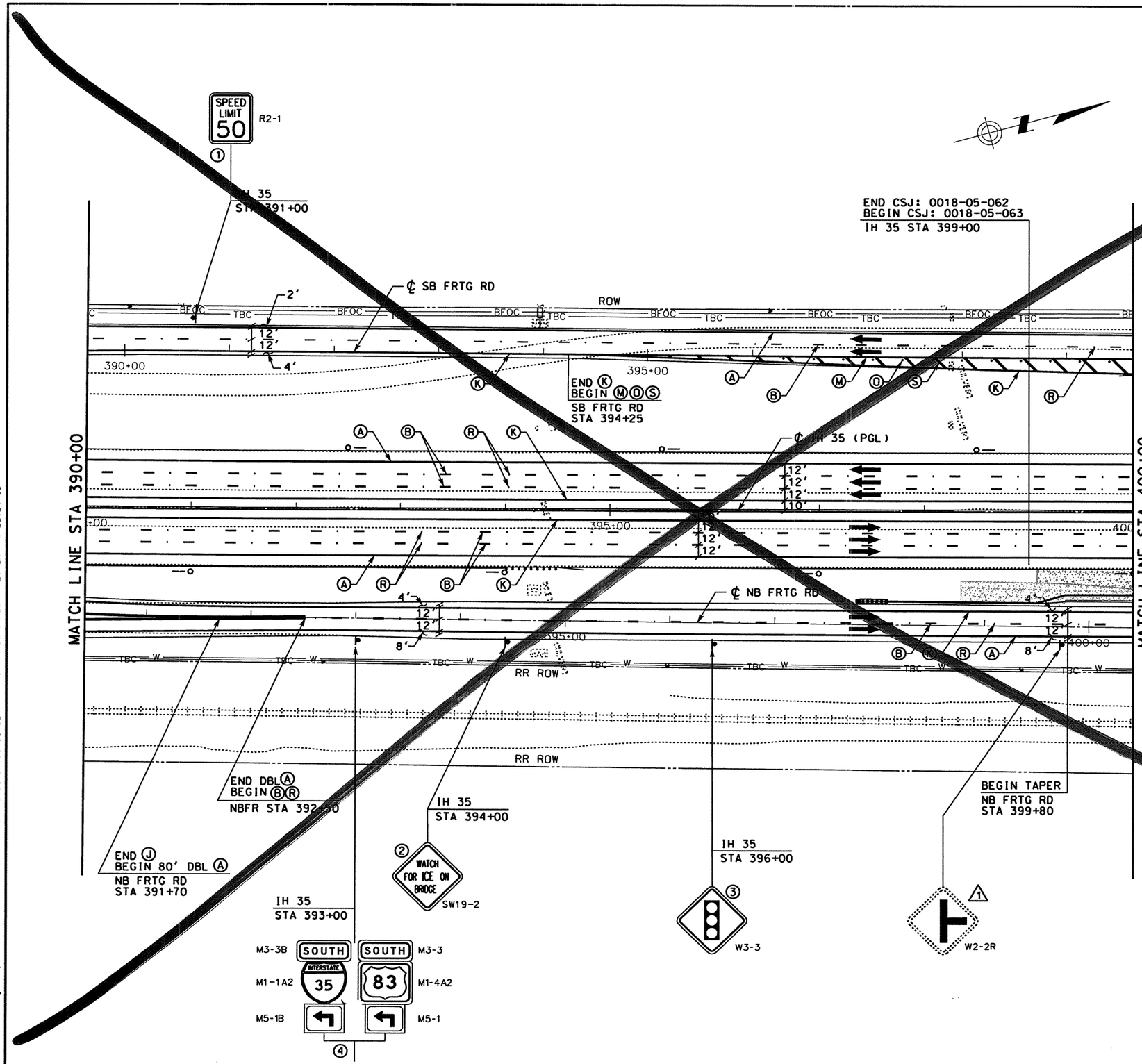

STRIPING LEGEND

- (A) REFL PAV MRK TY I & II (W)(SLD)(4")
- (B) REFL PAV MRK TY I & II (W)(BRK)(4")
- (C) REFL PAV MRK TY I & II (W)(SLD)(8")
- (D) REFL PAV MRK TY I & II (W)(DOT)(4")
- (E) REFL PAV MRK TY I & II (W)(SLD)(12")
- (F) REFL PAV MRK TY I & II (W)(SLD)(24")
- (L) REFL PAV MRK TY I & II (W)(LNDP)(12")
- (G) REFL PAV MRK TY I & II (W)(ARROW)
- (H) REFL PAV MRK TY I & II (W)(DBL ARROW)
- (T) REFL PAV MRK TY I & II (W)(TND ARROW)
- (I) REFL PAV MRK TY I & II (W)(WORD)
- (J) REFL PAV MRK TY I & II (W)(ENT GORE)
- (K) REFL PAV MRK TY I & II (Y)(SLD)(4")
- (M) REFL PAV MRK TY I & II (Y)(SLD)(8")
- (N) REFL PAV MRK TY I & II (Y)(SLD)(12")
- (S) REFL PAV MRK TY I & II (Y)(SLD)(24")
- (O) RAIS PAV MRKR CL B (REFL) TY I-A
- (R) RAIS PAV MRKR CL B (REFL) TY II-C-R
- (Q) RAIS PAV MRKR CL B (REFL) TY II-A-A

SIGNING AND DELINEATION LEGEND

- TRAFFIC FLOW ARROWS (PROPOSED)
- TRAFFIC FLOW ARROWS (EXISTING)
- (#) SMALL SIGN TO BE INSTALLED ITEM (644)
- (E) SIGN TO REMAIN IN PLACE
- (#) SIGN TO BE REMOVED ITEM (649)
- (#) SIGN TO BE RELOCATED (ITEM 649)
- [L#] LARGE SIGN TO BE INSTALLED
- SIGN POST FOR SMALL SIGN
- DOUBLE POSTED SIGN
- SIGN POST, BACK TO BACK SMALL SIGNS
- "K" MARKER
- DELINEATOR (D-SW) (A)
- DELINEATOR (D-SY) (A)
- DELINEATOR (D-DW) (A)
- OBJECT MARKER (OM-2VP)
- OBJECT MARKER (OM-2SR)
- OBJECT MARKER (OB-3B)

0 50 100
SCALE: 1" = 100'

STATE OF TEXAS
SIDNEY S. AFONSO
88055
REGISTERED PROFESSIONAL ENGINEER

THE SEAL APPEARING ON THIS DOCUMENT WAS AUTHORIZED BY SIDNEY S. AFONSO PE 88055, ON MARCH 05, 2004

KBR
Engineered by KBR Technical Services, Inc

©2003 Texas Department of Transportation

IH 35
LOOP 20 TO UNIROYAL ROAD
SIGNING AND PAVEMENT MARKINGS
STA 390+00 TO STA 400+00
SHEET 27 OF 33

FED RD DIV NO	FEDERAL AID PROJECT NO	SHEET NO
6	NH-2002 (79)	126

STATE	STATE DIST	COUNTY
TEXAS	LAREDO	WEBB

CONT	SECT	JOB	HIGHWAY NO
0018	05	062, ETC	IH 35

DATE	BY	REV	REVISION
02/17/04	AA	1	MAINLANE SHLDR WIDEN REV EDGE OF PAVEMENT AND PAVEMENT LIMITS

REF FILE(S): j011op01.uti, uti LV ON = 1-63
j011op01.eop, eop LV ON = 1-17,19-63
j011op01.bck, bck LV ON = 2-9,10,14,17,20,21,25,28
j011op01.alg, alg LV ON = 1-6,35-39
j011op01.bdr, bdr LV ON = 14,31,45,50,57,58,60-62
j011op01.spm, spm LV ON = 1-63
milointr.row, row LV ON = 1-22,24-63

3/4/2004
HOUFILE023 \hcivil\cf0130\
b22op24.dgn-14

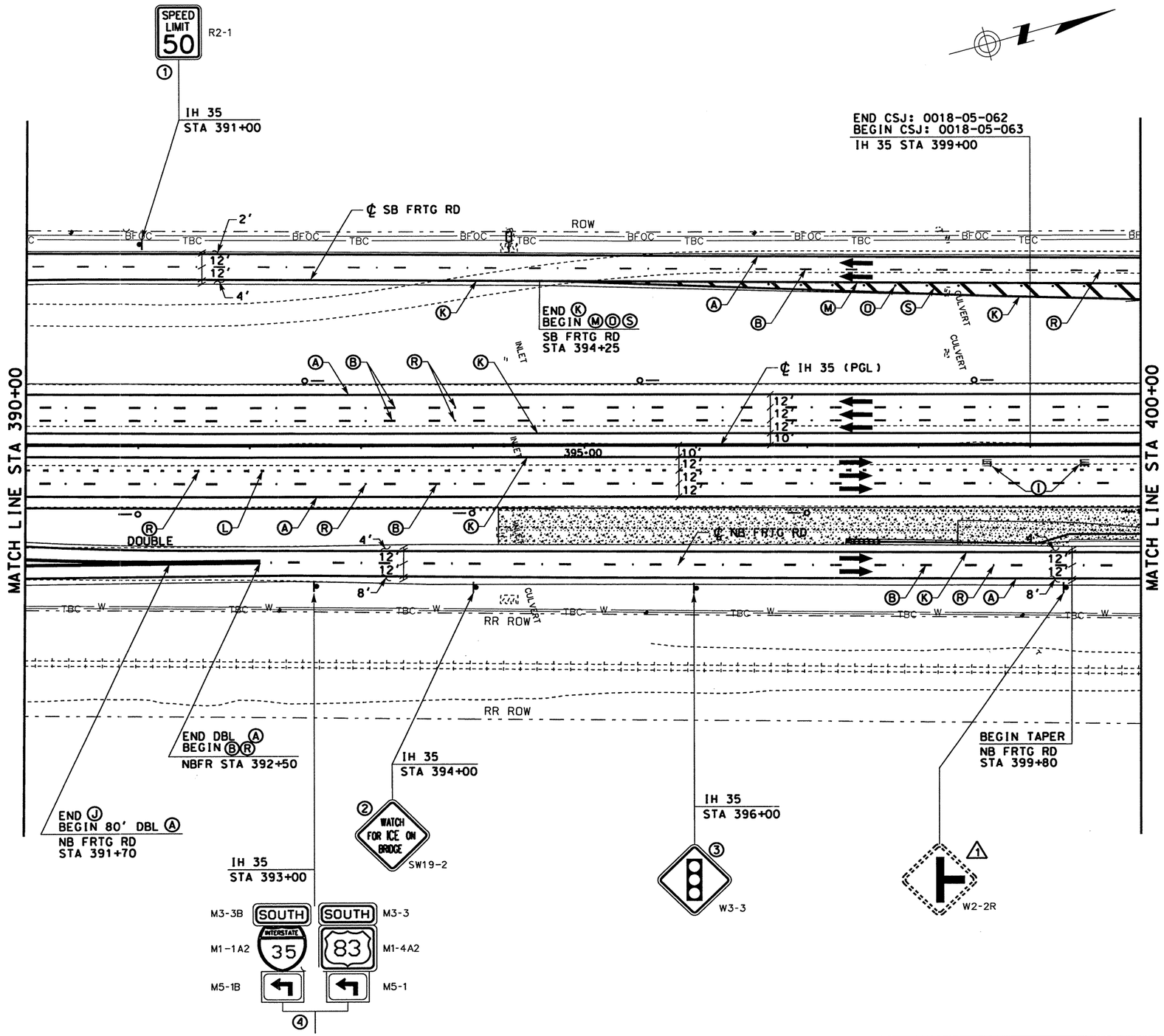

STRIPING LEGEND

- Ⓐ REFL PAV MRK TY I & II (W)(SLD)(4")
- Ⓑ REFL PAV MRK TY I & II (W)(BRK)(4")
- Ⓒ REFL PAV MRK TY I & II (W)(SLD)(8")
- Ⓓ REFL PAV MRK TY I & II (W)(DOT)(4")
- Ⓔ REFL PAV MRK TY I & II (W)(SLD)(12")
- Ⓕ REFL PAV MRK TY I & II (W)(SLD)(24")
- Ⓛ REFL PAV MRK TY I & II (W)(LNDP)(12")
- Ⓖ REFL PAV MRK TY I & II (W)(ARROW)
- Ⓗ REFL PAV MRK TY I & II (W)(DBL ARROW)
- Ⓣ REFL PAV MRK TY I & II (W)(TND ARROW)
- Ⓘ REFL PAV MRK TY I & II (W)(WORD)
- Ⓙ REFL PAV MRK TY I & II (W)(ENT GORE)
- Ⓚ REFL PAV MRK TY I & II (Y)(SLD)(4")
- Ⓜ REFL PAV MRK TY I & II (Y)(SLD)(8")
- Ⓝ REFL PAV MRK TY I & II (Y)(SLD)(12")
- Ⓢ REFL PAV MRK TY I & II (Y)(SLD)(24")
- Ⓞ RAIS PAV MRKR CL B (REFL) TY I-A
- Ⓡ RAIS PAV MRKR CL B (REFL) TY II-C-R
- Ⓞ RAIS PAV MRKR CL B (REFL) TY II-A-A

SIGNING AND DELINEATION LEGEND

- TRAFFIC FLOW ARROWS ~~(PROPOSED)~~
- TRAFFIC FLOW ARROWS (EXISTING)
- (#) SMALL SIGN TO BE INSTALLED ITEM (644)
- (E) SIGN TO REMAIN IN PLACE
- (#) SIGN TO BE REMOVED ITEM (649)
- (#) SIGN TO BE RELOCATED (ITEM 649)
- [L#] LARGE SIGN TO BE INSTALLED
- SIGN POST FOR SMALL SIGN
- DOUBLE POSTED SIGN
- SIGN POST, BACK TO BACK SMALL SIGNS
- "K" MARKER
- DELINEATOR (D-SW) (A)
- DELINEATOR (D-SY) (A)
- DELINEATOR (D-DW) (A)
- OBJECT MARKER (OM-2VP)
- OBJECT MARKER (OM-2SR)
- OBJECT MARKER (OB-3B)

STATE OF TEXAS
JAIME A. VELA, JR.
92045
LICENSED PROFESSIONAL ENGINEER

The seal appearing on this document was authorized by JAIME A. VELA, JR. P.E. 92045, on 12/05, 20 06

Jaime A. Vela Jr. P.E.

HORIZ: 1"= 100'

TEXAS DEPARTMENT OF TRANSPORTATION
© 2006

IH35
LOOP 20 TO UNIROYAL ROAD
SIGNING AND PAVEMENT MARKINGS

			DN: JAV		DW: OJC	
			CK: JAV		CK: RM	
FED.RD. DIV.NO.	STATE PROJECT NO.					SHEET NO.
6	NH 2002 (79)		SHEET 27 OF 33			796
STATE	STATE DIST.NO.	COUNTY	CONTROL	SECTION	JOB	HIGHWAY NO.
TEXAS	22	WEBB	0018	05	062	IH 35

11/30/2006 ocostil t:\projects\no-csj assigned\uniroyal_interchange\signing&pavement marking\b22lop24.dgn

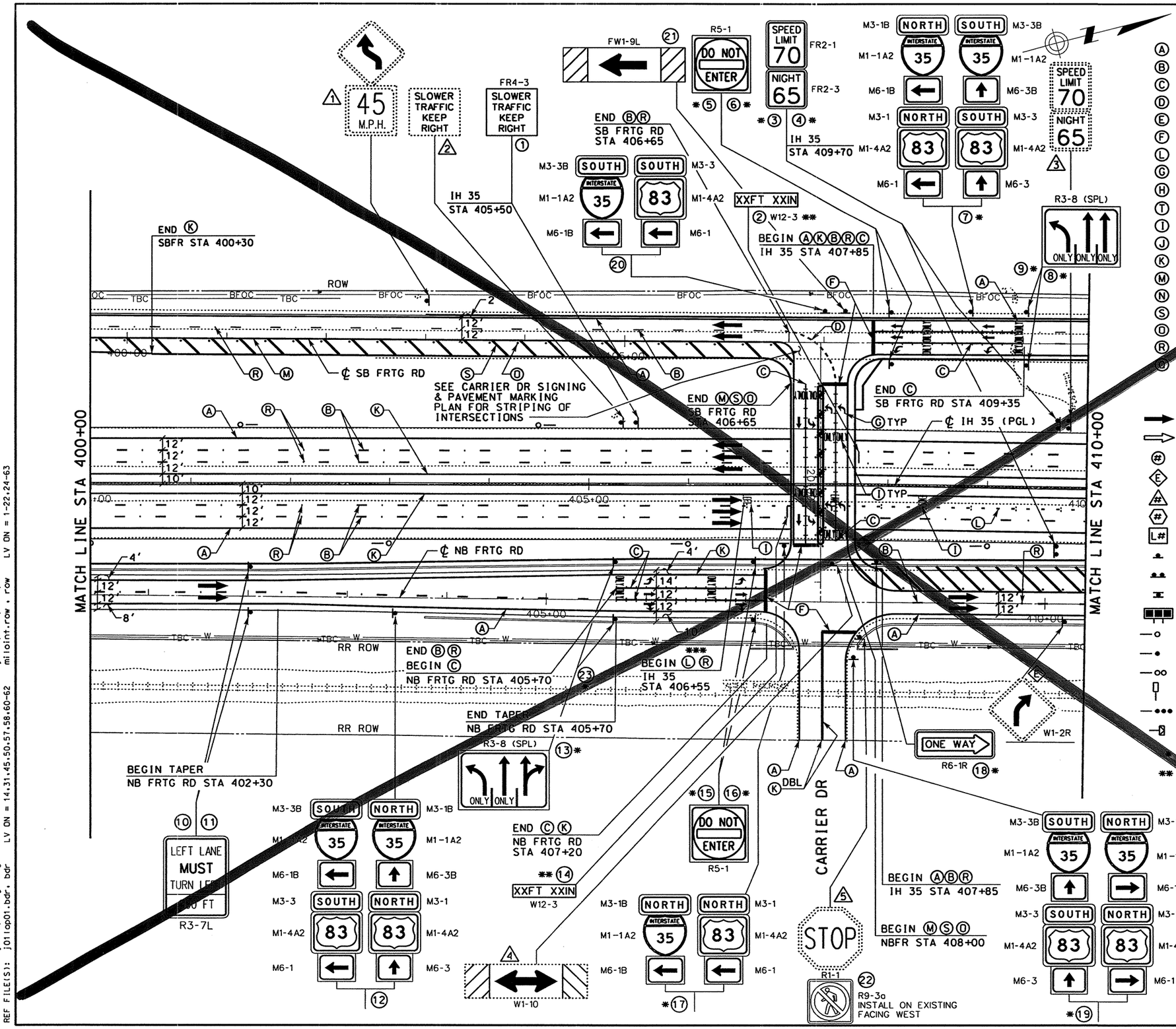

STRIPING LEGEND

- (A) REFL PAV MRK TY I & II (W)(SLD)(4")
- (B) REFL PAV MRK TY I & II (W)(BRK)(4")
- (C) REFL PAV MRK TY I & II (W)(SLD)(8")
- (D) REFL PAV MRK TY I & II (W)(DOT)(4")
- (E) REFL PAV MRK TY I & II (W)(SLD)(12")
- (F) REFL PAV MRK TY I & II (W)(SLD)(24")
- (L) REFL PAV MRK TY I & II (W)(LNDP)(12")
- (G) REFL PAV MRK TY I & II (W)(ARROW)
- (H) REFL PAV MRK TY I & II (W)(DBL ARROW)
- (T) REFL PAV MRK TY I & II (W)(TNP ARROW)
- (I) REFL PAV MRK TY I & II (W)(WORD)
- (J) REFL PAV MRK TY I & II (W)(ENT GORE)
- (K) REFL PAV MRK TY I & II (Y)(SLD)(4")
- (M) REFL PAV MRK TY I & II (Y)(SLD)(8")
- (N) REFL PAV MRK TY I & II (Y)(SLD)(12")
- (S) REFL PAV MRK TY I & II (Y)(SLD)(24")
- (O) RAIS PAV MRKR CL B (REFL) TY I-A
- (R) RAIS PAV MRKR CL B (REFL) TY II-C-R
- (Q) RAIS PAV MRKR CL B (REFL) TY II-A-A

SIGNING AND DELINEATION LEGEND

- TRAFFIC FLOW ARROWS (PROPOSED)
- TRAFFIC FLOW ARROWS (EXISTING)
- # SMALL SIGN TO BE INSTALLED ITEM (644)
- (E) SIGN TO REMAIN IN PLACE
- # SIGN TO BE REMOVED ITEM (649)
- # SIGN TO BE RELOCATED (ITEM 649)
- L# LARGE SIGN TO BE INSTALLED
- SIGN POST FOR SMALL SIGN
- DOUBLE POSTED SIGN
- SIGN POST, BACK TO BACK SMALL SIGNS
- "K" MARKER
- DELINEATOR (D-SW) (A)
- DELINEATOR (D-SY) (A)
- DELINEATOR (D-DW) (A)
- OBJECT MARKER (OM-2VP)
- OBJECT MARKER (OM-2SR)
- OBJECT MARKER (OB-3B)
- * BRIDGE/WALL MOUNTED
- ** CLEARANCE TO BE NOTED AFTER CONSTRUCTION OF ROADWAY AND BRIDGE. BRIDGE PROTECT ASSEMBLY
- *** NOTES SEE MERGE RIGHT STANDARD FOR DETAILS

0 50 100
SCALE: 1" = 100'

STATE OF TEXAS SIDNEY S. AFONSO PE 88055 REGISTERED PROFESSIONAL ENGINEER

THE SEAL APPEARING ON THIS DOCUMENT WAS AUTHORIZED BY SIDNEY S. AFONSO PE 88055, ON MAY 30, 2003

KBR
Engineered by KBR Technical Services, Inc

©2003 Texas Department of Transportation

IH 35
LOOP 20 TO UNIROYAL ROAD
SIGNING AND PAVEMENT MARKINGS
STA 400+00 TO STA 410+00
SHEET 28 OF 33

FED RD DIV NO	FEDERAL AID PROJECT		SHEET NO
6	NH-2002 (79)		797
STATE	STATE DIST		COUNTY
TEXAS	LAREDO		WEBB
CONT	SECT	JOB	HIGHWAY NO
0018	05	062, ETC	IH 35

REF FILE(S): j011op01.uti, uti LV ON = 1-63
j011op01.eop, eop LV ON = 1-17.19-63
j011op01.bck, bck LV ON = 2,9.10.14.17.20.21.25.28
j011op01.alg, alg LV ON = 1-6.35-39
j011op01.bdr, bdr LV ON = 14.31.45.50.57.58.60-62
j011op01.spm, spm LV ON = 1-63
mi1oint.row , row LV ON = 1-22.24-63

HOUFILE023 \hcivil\cf0130\ b22lop25.dgn-13 6/2/2003

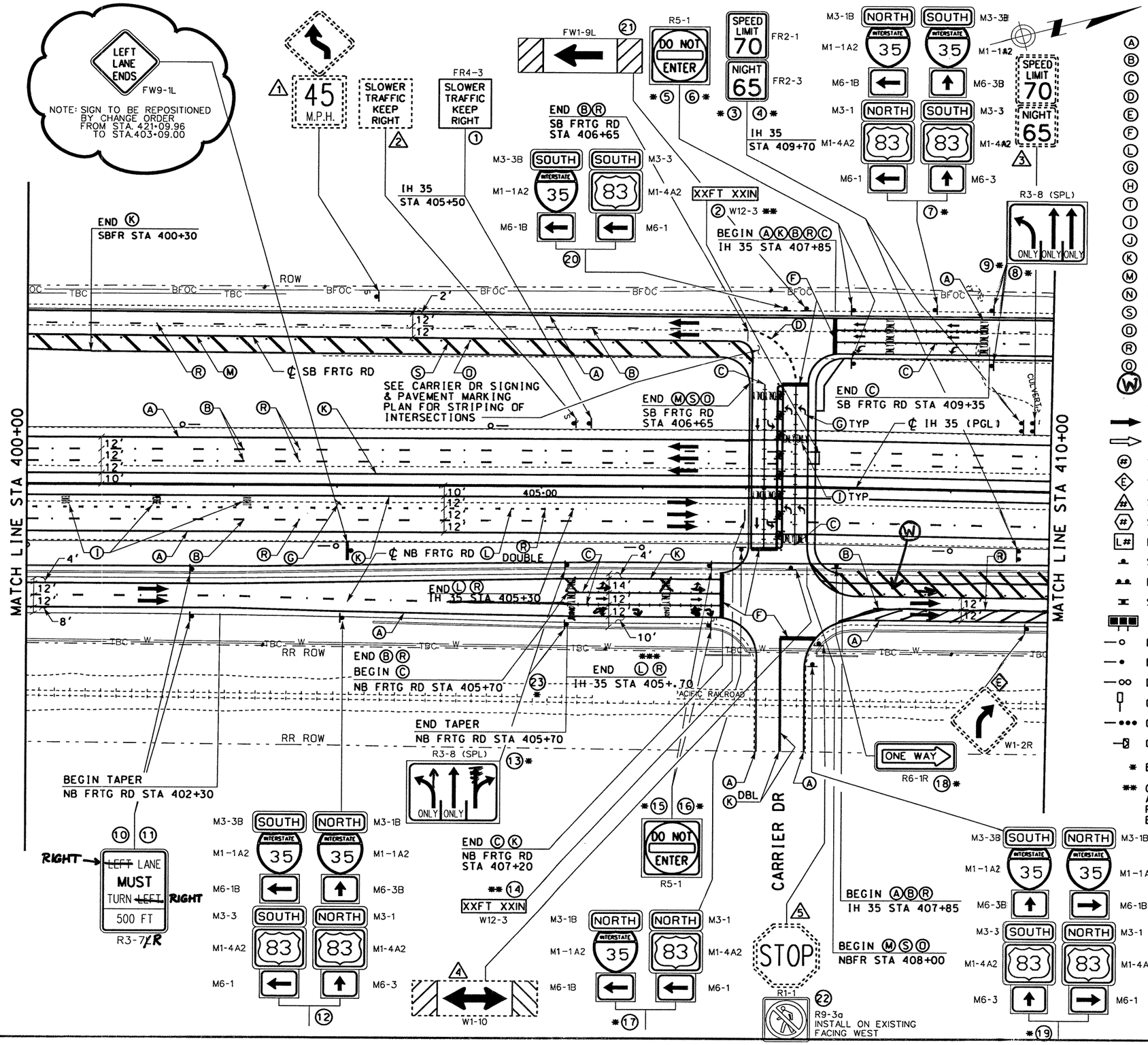

STRIPING LEGEND

- (A) REFL PAV MRK TY I & II (W)(SLD)(4")
- (B) REFL PAV MRK TY I & II (W)(BRK)(4")
- (C) REFL PAV MRK TY I & II (W)(SLD)(8")
- (D) REFL PAV MRK TY I & II (W)(DOT)(4")
- (E) REFL PAV MRK TY I & II (W)(SLD)(12")
- (F) REFL PAV MRK TY I & II (W)(SLD)(24")
- (L) REFL PAV MRK TY I & II (W)(LNDP)(12")
- (G) REFL PAV MRK TY I & II (W)(ARROW)
- (H) REFL PAV MRK TY I & II (W)(DBL ARROW)
- (T) REFL PAV MRK TY I & II (W)(TND ARROW)
- (I) REFL PAV MRK TY I & II (W)(WORD)
- (J) REFL PAV MRK TY I & II (W)(ENT GORE)
- (K) REFL PAV MRK TY I & II (Y)(SLD)(4")
- (M) REFL PAV MRK TY I & II (Y)(SLD)(8")
- (N) REFL PAV MRK TY I & II (Y)(SLD)(12")
- (S) REFL PAV MRK TY I & II (Y)(SLD)(24")
- (O) RAIS PAV MRKR CL B (REFL) TY I-A
- (R) RAIS PAV MRKR CL B (REFL) TY II-C-R
- (Q) RAIS PAV MRKR CL B (REFL) TY II-A-A
- (W) Eliminate Pavement Markings

SIGNING AND DELINEATION LEGEND

- TRAFFIC FLOW ARROWS ~~(PROPOSED)~~
- TRAFFIC FLOW ARROWS (EXISTING)
- (#) SMALL SIGN TO BE INSTALLED ITEM (644)
- (E) SIGN TO REMAIN IN PLACE
- (#) SIGN TO BE REMOVED ITEM (649)
- (#) SIGN TO BE RELOCATED (ITEM 649)
- [L#] LARGE SIGN TO BE INSTALLED
- SIGN POST FOR SMALL SIGN
- DOUBLE POSTED SIGN
- SIGN POST, BACK TO BACK SMALL SIGNS
- "K" MARKER
- DELINEATOR (D-SW) (A)
- DELINEATOR (D-SY) (A)
- DELINEATOR (D-DW) (A)
- OBJECT MARKER (OM-2VP)
- OBJECT MARKER (OM-2SR)
- OBJECT MARKER (OB-3B)
- * BRIDGE/WALL MOUNTED
- ** CLEARANCE TO BE NOTED AFTER CONSTRUCTION OF ROADWAY AND BRIDGE. BRIDGE PROTECT ASSEMBLY
- *** NOTE: SEE MERGE RIGHT STANDARD FOR DETAILS

STATE OF TEXAS
JAIME A. VELA, JR.
92045
LICENSED PROFESSIONAL ENGINEER

The seal appearing on this document was authorized by JAIME A. VELA, JR. P.E. 92045, on 12/05, 20 06

Jaime A. Vela, Jr., P.E.

HORIZ: 1" = 100'

TEXAS DEPARTMENT OF TRANSPORTATION
© 2006

IH35
LOOP 20 TO UNIROYAL ROAD
SIGNING AND PAVEMENT MARKINGS

DN: JAV	CK: JAV	DW: OJC	CK: RM

FED.RD. DIV.NO.	STATE PROJECT NO.					SHEET NO.
6	NH 2002 (79)	SHEET 28 OF 33				797
STATE	STATE DIST.NO.	COUNTY	CONTROL	SECTION	JOB	HIGHWAY NO.
TEXAS	22	WEBB	0018	05	062	IH 35

12/4/2006 ocostil t:\projects\no-csj assigned\uniroyal_interchange\signing&pavement marking\b22lop25.dgn

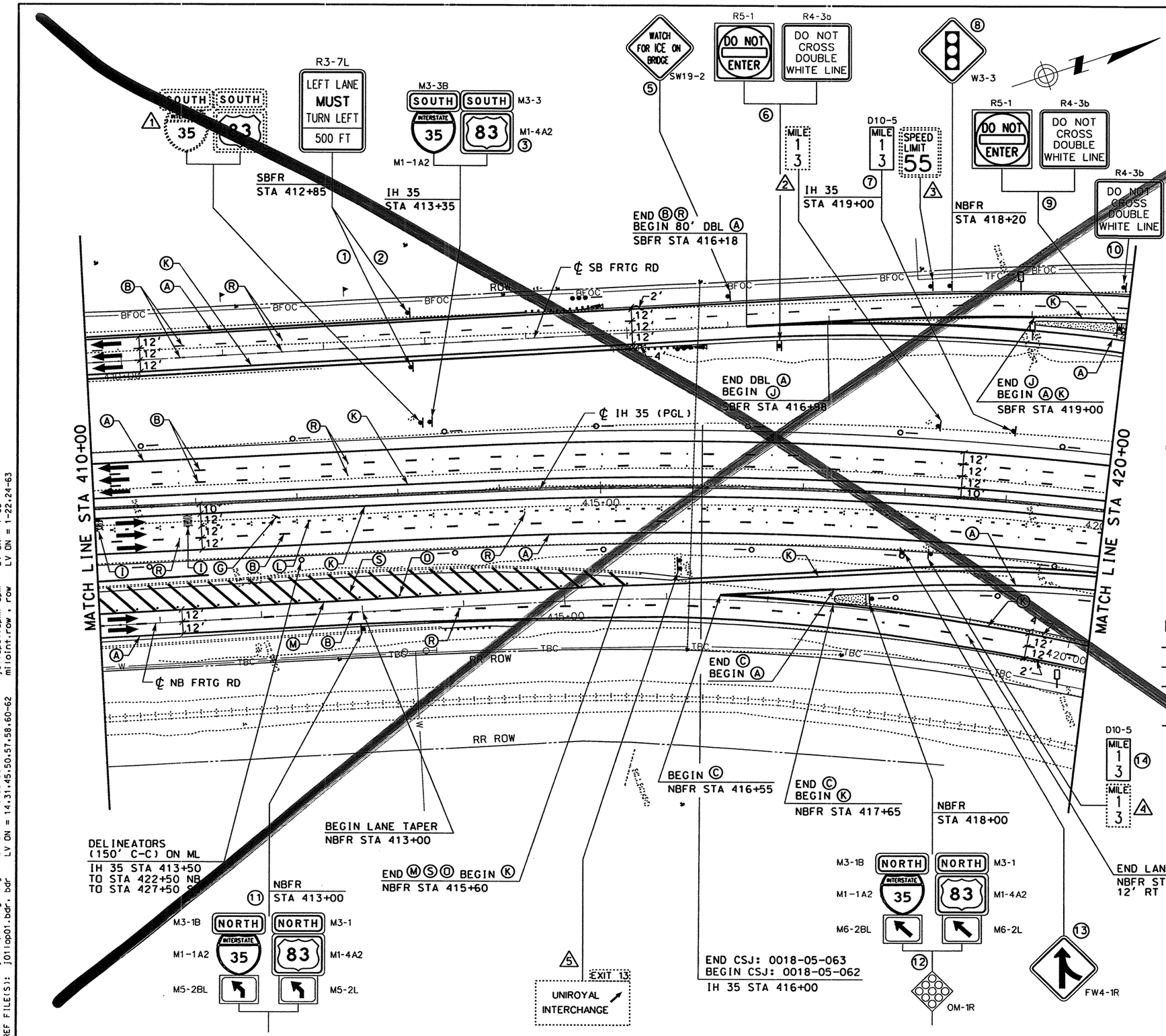

STRIPING LEGEND

- Ⓐ REFL PAV MRK TY I & II (W)(SLD)(4")
- Ⓑ REFL PAV MRK TY I & II (W)(BRK)(4")
- Ⓒ REFL PAV MRK TY I & II (W)(SLD)(8")
- Ⓓ REFL PAV MRK TY I & II (W)(DOT)(4")
- Ⓔ REFL PAV MRK TY I & II (W)(SLD)(12")
- Ⓕ REFL PAV MRK TY I & II (W)(SLD)(24")
- Ⓖ REFL PAV MRK TY I & II (W)(LNDP)(12")
- Ⓗ REFL PAV MRK TY I & II (W)(ARROW)
- Ⓣ REFL PAV MRK TY I & II (W)(DBL ARROW)
- Ⓘ REFL PAV MRK TY I & II (W)(TND ARROW)
- Ⓙ REFL PAV MRK TY I & II (W)(WORD)
- Ⓚ REFL PAV MRK TY I & II (W)(ENT GORE)
- Ⓜ REFL PAV MRK TY I & II (Y)(SLD)(4")
- Ⓝ REFL PAV MRK TY I & II (Y)(SLD)(8")
- Ⓢ REFL PAV MRK TY I & II (Y)(SLD)(12")
- Ⓓ REFL PAV MRK TY I & II (Y)(SLD)(24")
- Ⓡ RAIS PAV MRKR CL B (REFL) TY I-A
- Ⓞ RAIS PAV MRKR CL B (REFL) TY II-C-R
- RAIS PAV MRKR CL B (REFL) TY II-A-A

SIGNING AND DELINEATION LEGEND

- TRAFFIC FLOW ARROWS (PROPOSED)
- TRAFFIC FLOW ARROWS (EXISTING)
- # SMALL SIGN TO BE INSTALLED ITEM (644)
- Ⓔ SIGN TO REMAIN IN PLACE
- # SIGN TO BE REMOVED ITEM (649)
- # SIGN TO BE RELOCATED (ITEM 649)
- L# LARGE SIGN TO BE INSTALLED
- SIGN POST FOR SMALL SIGN
- DOUBLE POSTED SIGN
- SIGN POST, BACK TO BACK SMALL SIGNS
- "K" MARKER
- DELINEATOR (D-SW) (A)
- DELINEATOR (D-SY) (A)
- DELINEATOR (D-DW) (A)
- OBJECT MARKER (OM-2VP)
- OBJECT MARKER (OM-2SR)
- OBJECT MARKER (OB-3B)

0 50 100
SCALE: 1" = 100'

STATE OF TEXAS
SIDNEY S. AFONSO
88055
REGISTERED PROFESSIONAL ENGINEER

THE SEAL APPEARING ON THIS DOCUMENT WAS AUTHORIZED BY SIDNEY S. AFONSO PE 88055, ON MAY 30, 2003

KBR
Engineered by KBR Technical Services, Inc

©2003 Texas Department of Transportation

IH 35
LOOP 20 TO UNIROYAL ROAD
SIGNING AND PAVEMENT MARKINGS
STA 410+00 TO
STA 420+00

SHEET 29 OF 33

FED RD DIV NO	FEDERAL AID PROJECT NO	SHEET NO
6	NH-2002 (79)	798
STATE	STATE DIST	COUNTY
TEXAS	LAREDO	WEBB
CONT / SECT / JOB		HIGHWAY NO
0018 / 05 / 062, ETC		IH 35

6/2/2003

b22lop26.dgn-16 HOUFILE023 \hcivil\cf0130\

REF FILE(S): j01lop01.uti, uti LV ON = 1-63
j01lop01.eop, eop LV ON = 1-17,19-63
j01lop01.back, bck LV ON = 2,9,10,14,17,20,21,25,28
j01lop01.alg, alg LV ON = 1-6,35-39
j01lop01.bdr, bdr LV ON = 14,31,45,50,57,58,60-62
j01lop01.spm, spm LV ON = 1-63
milointr.row, row LV ON = 1-22,24-63

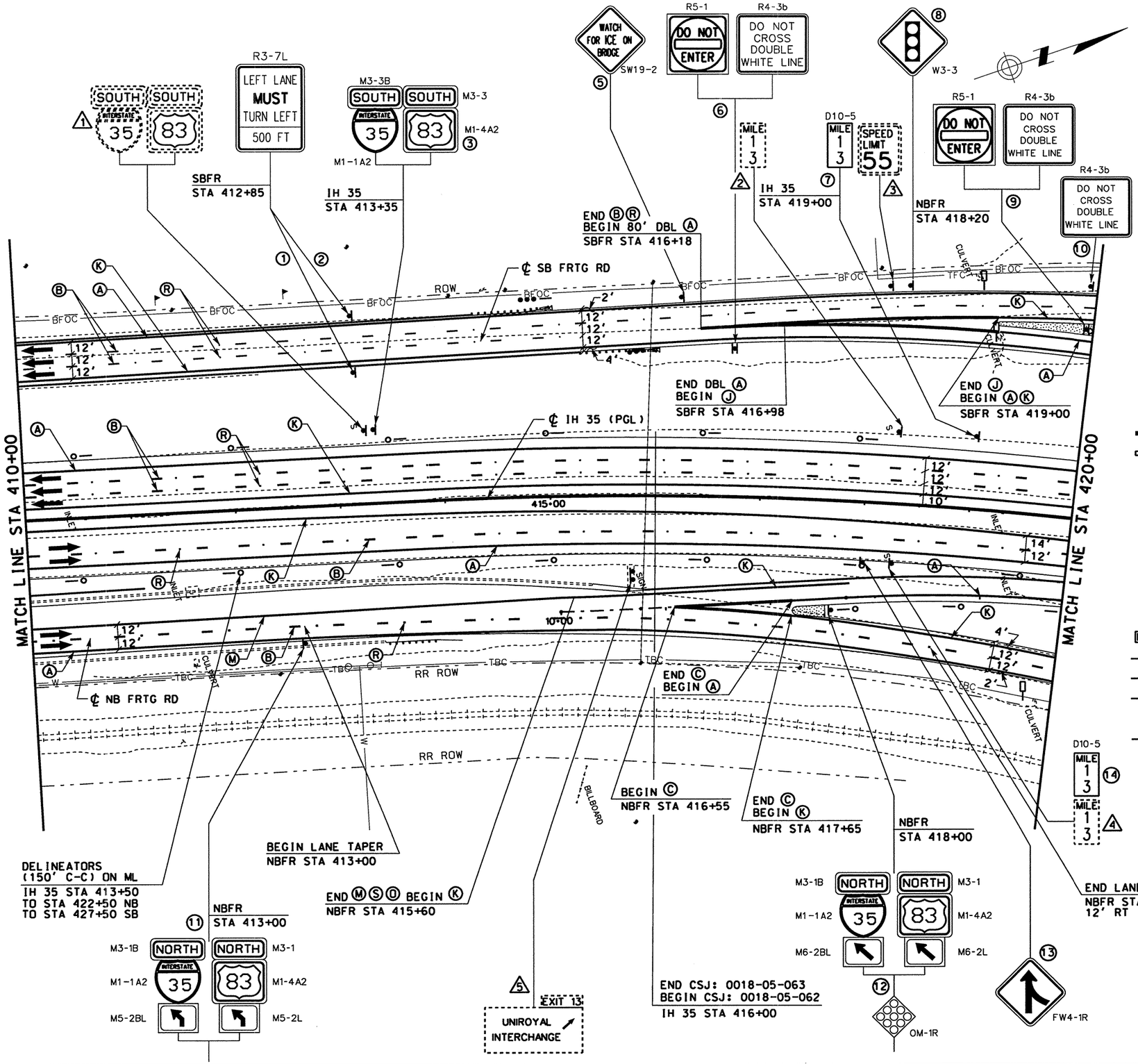

STRIPING LEGEND

- Ⓐ REFL PAV MRK TY I & II (W)(SLD)(4")
- Ⓑ REFL PAV MRK TY I & II (W)(BRK)(4")
- Ⓒ REFL PAV MRK TY I & II (W)(SLD)(8")
- Ⓓ REFL PAV MRK TY I & II (W)(DOT)(4")
- Ⓔ REFL PAV MRK TY I & II (W)(SLD)(12")
- Ⓕ REFL PAV MRK TY I & II (W)(SLD)(24")
- Ⓛ REFL PAV MRK TY I & II (W)(LNDP)(12")
- Ⓖ REFL PAV MRK TY I & II (W)(ARROW)
- Ⓗ REFL PAV MRK TY I & II (W)(DBL ARROW)
- Ⓣ REFL PAV MRK TY I & II (W)(TND ARROW)
- Ⓘ REFL PAV MRK TY I & II (W)(WORD)
- Ⓙ REFL PAV MRK TY I & II (W)(ENT GORE)
- Ⓚ REFL PAV MRK TY I & II (Y)(SLD)(4")
- Ⓜ REFL PAV MRK TY I & II (Y)(SLD)(8")
- Ⓝ REFL PAV MRK TY I & II (Y)(SLD)(12")
- Ⓢ REFL PAV MRK TY I & II (Y)(SLD)(24")
- Ⓓ RAIS PAV MRKR CL B (REFL) TY I-A
- Ⓡ RAIS PAV MRKR CL B (REFL) TY II-C-R
- Ⓞ RAIS PAV MRKR CL B (REFL) TY II-A-A

SIGNING AND DELINEATION LEGEND

- TRAFFIC FLOW ARROWS (~~PROPOSED~~)
- TRAFFIC FLOW ARROWS (EXISTING)
- (#) SMALL SIGN TO BE INSTALLED ITEM (644)
- (E) SIGN TO REMAIN IN PLACE
- (#) SIGN TO BE REMOVED ITEM (649)
- (#) SIGN TO BE RELOCATED (ITEM 649)
- [L#] LARGE SIGN TO BE INSTALLED
- SIGN POST FOR SMALL SIGN
- DOUBLE POSTED SIGN
- SIGN POST, BACK TO BACK SMALL SIGNS
- "K" MARKER
- DELINEATOR (D-SW) (A)
- DELINEATOR (D-SY) (A)
- DELINEATOR (D-DW) (A)
- OBJECT MARKER (OM-2VP)
- OBJECT MARKER (OM-2SR)
- OBJECT MARKER (OB-3B)

STATE OF TEXAS
JAIME A. VELA, JR.
92045
LICENSED
PROFESSIONAL ENGINEER

The seal appearing on this document was authorized by JAIME A. VELA, JR. P.E. 92045, on 12/05, 2006

Jaime A. Vela, Jr., P.E.

HORIZ: 1" = 100'

TEXAS DEPARTMENT OF TRANSPORTATION
© 2006

IH35
LOOP 20 TO UNIROYAL ROAD
SIGNING AND PAVEMENT
MARKINGS

DN: JAV	DW: OJC
CK: JAV	CK: RM

FED.RD. DIV.NO.	STATE PROJECT NO.		SHEET 29 OF 33			SHEET NO.
6	NH 2002 (79)					798
STATE	STATE DIST.NO.	COUNTY	CONTROL	SECTION	JOB	HIGHWAY NO.
TEXAS	22	WEBB	0018	05	062	IH 35

11/30/2006 ocostil t:\projects\no-csj assigned\uniroyal_interchange\signing&pavement marking\b22lop26.dgn

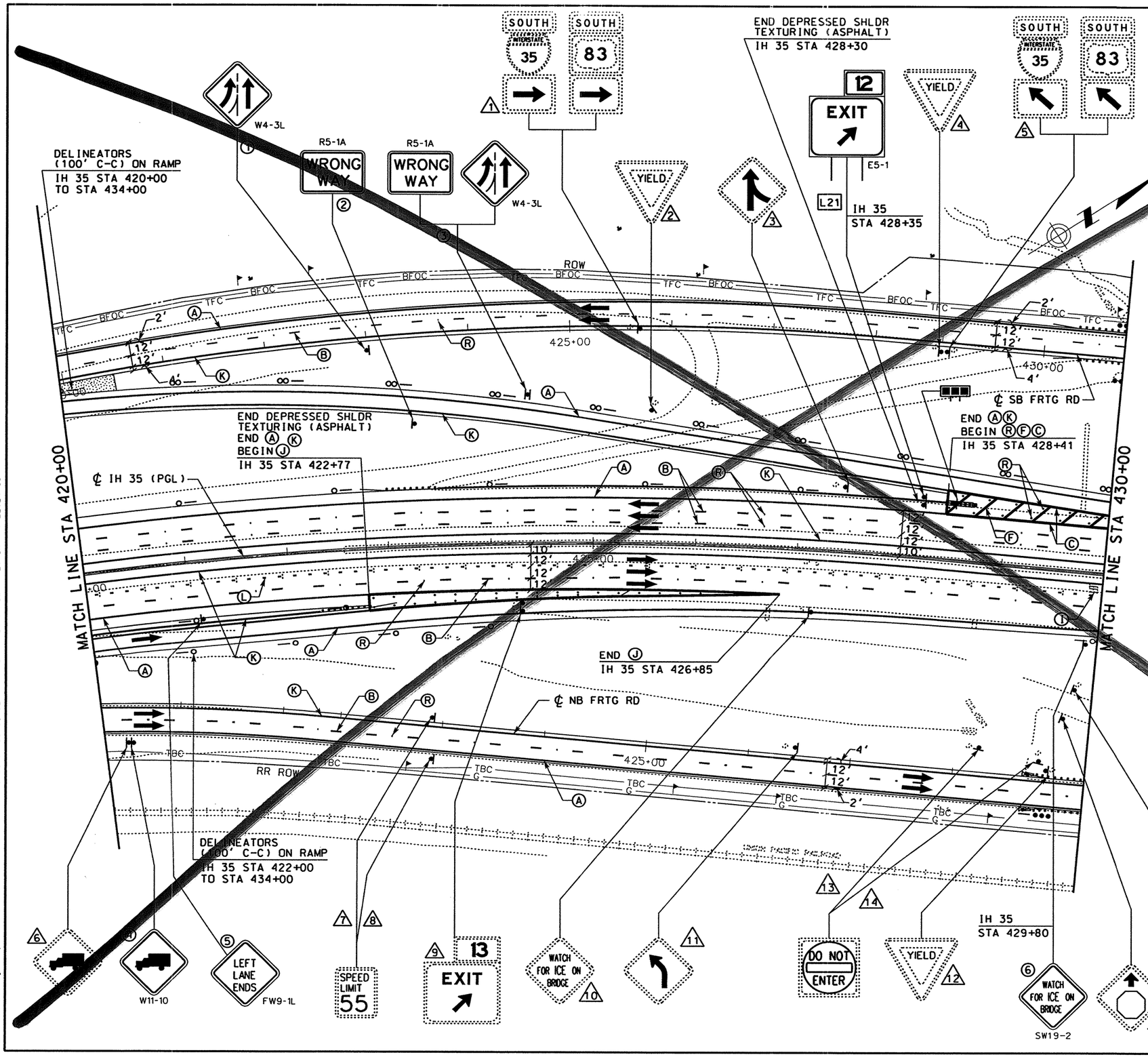

STRIPING LEGEND

- (A) REFL PAV MRK TY I & II (W)(SLD)(4")
- (B) REFL PAV MRK TY I & II (W)(BRK)(4")
- (C) REFL PAV MRK TY I & II (W)(SLD)(8")
- (D) REFL PAV MRK TY I & II (W)(DOT)(4")
- (E) REFL PAV MRK TY I & II (W)(SLD)(12")
- (F) REFL PAV MRK TY I & II (W)(SLD)(24")
- (L) REFL PAV MRK TY I & II (W)(LNDP)(12")
- (G) REFL PAV MRK TY I & II (W)(ARROW)
- (H) REFL PAV MRK TY I & II (W)(DBL ARROW)
- (T) REFL PAV MRK TY I & II (W)(TND ARROW)
- (I) REFL PAV MRK TY I & II (W)(WORD)
- (J) REFL PAV MRK TY I & II (W)(ENT GORE)
- (K) REFL PAV MRK TY I & II (Y)(SLD)(4")
- (M) REFL PAV MRK TY I & II (Y)(SLD)(8")
- (N) REFL PAV MRK TY I & II (Y)(SLD)(12")
- (S) REFL PAV MRK TY I & II (Y)(SLD)(24")
- (D) RAIS PAV MRKR CL B (REFL) TY I-A
- (R) RAIS PAV MRKR CL B (REFL) TY II-C-R
- (O) RAIS PAV MRKR CL B (REFL) TY II-A-A

SIGNING AND DELINEATION LEGEND

- TRAFFIC FLOW ARROWS (PROPOSED)
- TRAFFIC FLOW ARROWS (EXISTING)
- (#) SMALL SIGN TO BE INSTALLED ITEM (644)
- (E) SIGN TO REMAIN IN PLACE
- (#) SIGN TO BE REMOVED ITEM (649)
- (#) SIGN TO BE RELOCATED (ITEM 649)
- [L#] LARGE SIGN TO BE INSTALLED
- SIGN POST FOR SMALL SIGN
- DOUBLE POSTED SIGN
- SIGN POST, BACK TO BACK SMALL SIGNS
- "K" MARKER
- DELINEATOR (D-SW) (A)
- DELINEATOR (D-SY) (A)
- DELINEATOR (D-DW) (A)
- OBJECT MARKER (OM-2VP)
- OBJECT MARKER (OM-2SR)
- OBJECT MARKER (OB-3B)

0 50 100
SCALE: 1" = 100'

STATE OF TEXAS
SIDNEY S. AFONSO
PE 88055
REGISTERED PROFESSIONAL ENGINEER

THE SEAL APPEARING ON THIS DOCUMENT WAS AUTHORIZED BY SIDNEY S. AFONSO PE 88055, ON MAY 30, 2003

KBR
Engineered by KBR Technical Services, Inc

©2003 Texas Department of Transportation

IH 35
LOOP 20 TO UNIROYAL ROAD
SIGNING AND PAVEMENT MARKINGS
STA 420+00 TO STA 430+00

SHEET 30 OF 33

FED RD DIV NO	FEDERAL AID PROJECT NO	SHEET NO
6	NH-2002 (79)	799
STATE	STATE DIST	COUNTY
TEXAS	LAREDO	WEBB
CONT	SECT	JOB	HIGHWAY NO
0018	05	062, ETC	IH 35

6/2/2003
HOUFILE023 \hcivil\cf0130\
b22lop27.dgn-07

REF FILE(S): j01lop01.bdr, bdr LV ON = 14,31,45,50,57,58,60-62
j01lop01.alg, alg LV ON = 1-6,35-39
j01lop01.bck, bck LV ON = 2,9,10,14,17,20,21,25,28
j01lop01.eob, eob LV ON = 1-17,19-63
j01lop01.uti, uti LV ON = 1-63
j01lop01.spm, spm LV ON = 1-63
milpoint.row , row LV ON = 1-22,24-63

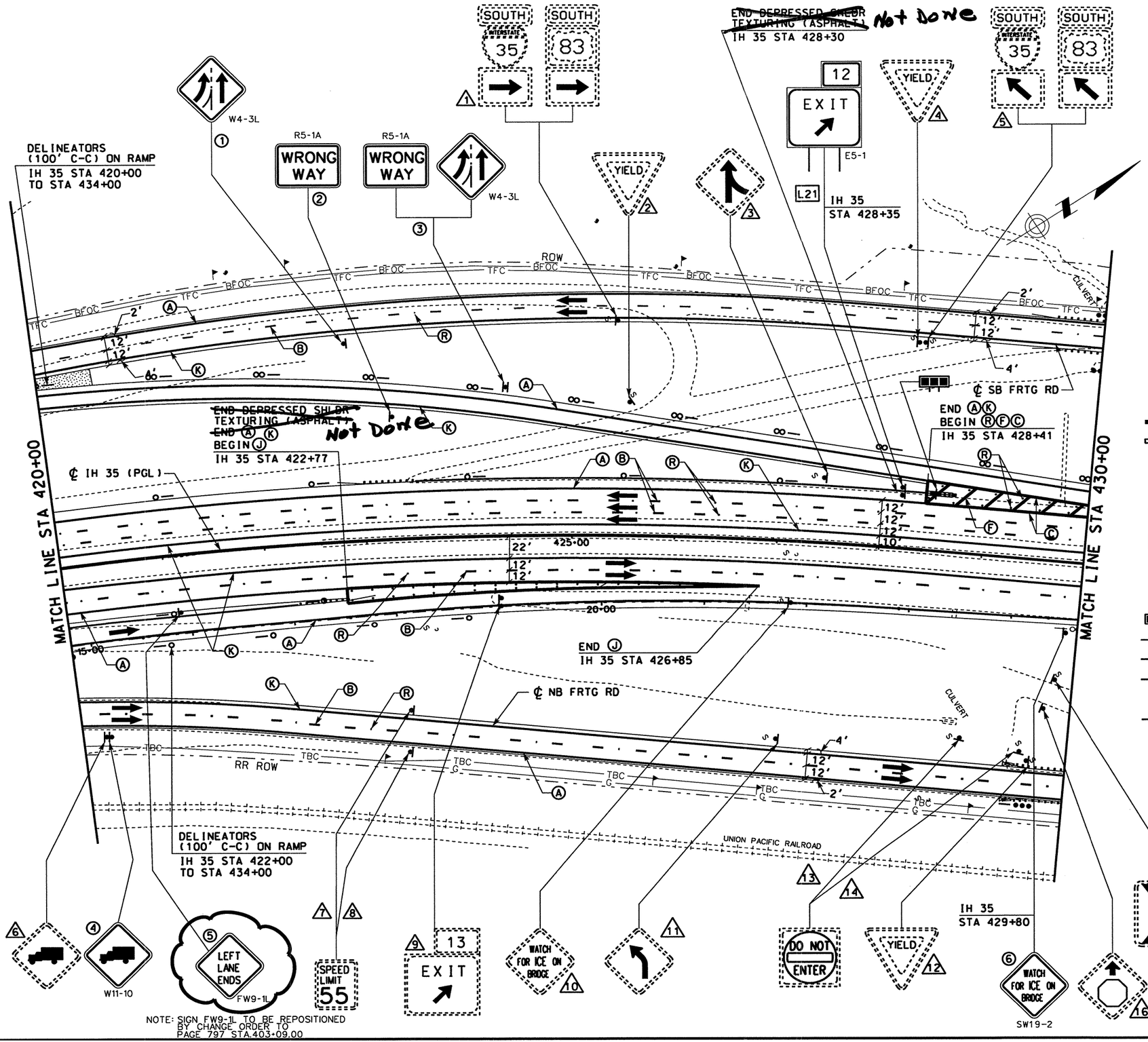

STRIPING LEGEND

- (A) REFL PAV MRK TY I & II (W)(SLD)(4")
- (B) REFL PAV MRK TY I & II (W)(BRK)(4")
- (C) REFL PAV MRK TY I & II (W)(SLD)(8")
- (D) REFL PAV MRK TY I & II (W)(DOT)(4")
- (E) REFL PAV MRK TY I & II (W)(SLD)(12")
- (F) REFL PAV MRK TY I & II (W)(SLD)(24")
- (L) REFL PAV MRK TY I & II (W)(LNDP)(12")
- (G) REFL PAV MRK TY I & II (W)(ARROW)
- (H) REFL PAV MRK TY I & II (W)(DBL ARROW)
- (T) REFL PAV MRK TY I & II (W)(TND ARROW)
- (I) REFL PAV MRK TY I & II (W)(WORD)
- (J) REFL PAV MRK TY I & II (W)(ENT GORE)
- (K) REFL PAV MRK TY I & II (Y)(SLD)(4")
- (M) REFL PAV MRK TY I & II (Y)(SLD)(8")
- (N) REFL PAV MRK TY I & II (Y)(SLD)(12")
- (S) REFL PAV MRK TY I & II (Y)(SLD)(24")
- (D) RAIS PAV MRKR CL B (REFL) TY I-A
- (R) RAIS PAV MRKR CL B (REFL) TY II-C-R
- (O) RAIS PAV MRKR CL B (REFL) TY II-A-A

SIGNING AND DELINEATION LEGEND

- TRAFFIC FLOW ARROWS ~~(PROPOSED)~~
- TRAFFIC FLOW ARROWS (EXISTING)
- (#) SMALL SIGN TO BE INSTALLED ITEM (644)
- (E) SIGN TO REMAIN IN PLACE
- (#) SIGN TO BE REMOVED ITEM (649)
- (#) SIGN TO BE RELOCATED (ITEM 649)
- [L#] LARGE SIGN TO BE INSTALLED
- SIGN POST FOR SMALL SIGN
- DOUBLE POSTED SIGN
- SIGN POST, BACK TO BACK SMALL SIGNS
- "K" MARKER
- DELINEATOR (D-SW) (A)
- DELINEATOR (D-SY) (A)
- DELINEATOR (D-DW) (A)
- OBJECT MARKER (OM-2VP)
- OBJECT MARKER (OM-2SR)
- OBJECT MARKER (OB-3B)

STATE OF TEXAS
JAIME A. VELA, JR.
92045
LICENSED PROFESSIONAL ENGINEER

The seal appearing on this document was authorized by JAIME A. VELA, JR. P.E. 92045, on 12/05 2006

Jaime A. Vela, P.E.

HORIZ: 1"= 100'

TEXAS DEPARTMENT OF TRANSPORTATION
© 2006

IH35
LOOP 20 TO UNIROYAL ROAD
SIGNING AND PAVEMENT MARKINGS

DN: JAV DW: OJC
CK: JAV CK: RM

FED.RD. DIV.NO.	STATE PROJECT NO.					SHEET NO.
6	NH 2002 (79)		SHEET 30 OF 33			799
STATE	STATE DIST.NO.	COUNTY	CONTROL	SECTION	JOB	HIGHWAY NO.
TEXAS	22	WEBB	0018	05	062	IH 35

11/30/2006 ocostil t:\projects\no-csj assigned\uniroyal_interchange\signing&pavement marking\b22lop27.dgn

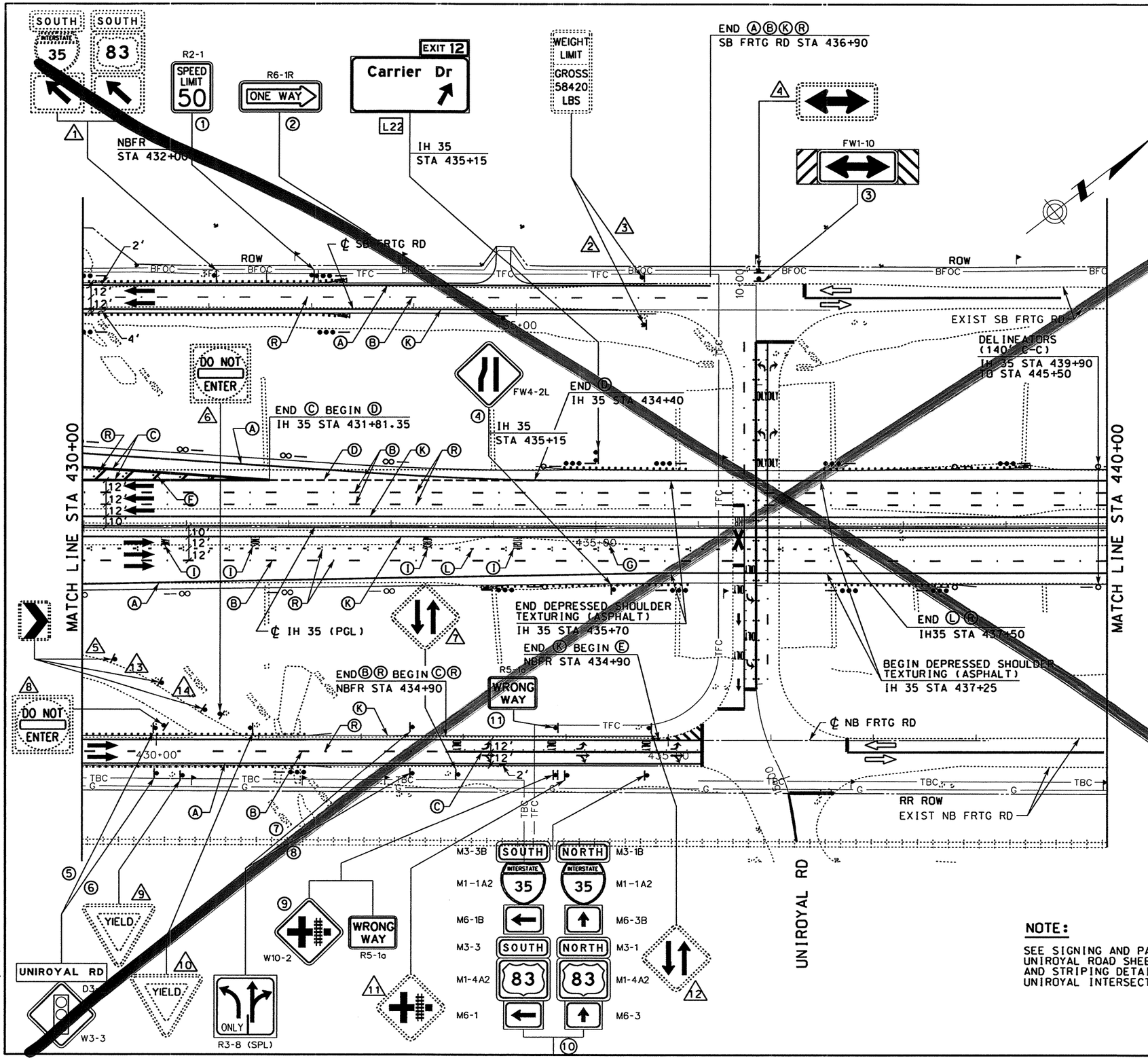

STRIPING LEGEND

- Ⓐ REFL PAV MRK TY I & II (W)(SLD)(4")
- Ⓑ REFL PAV MRK TY I & II (W)(BRK)(4")
- Ⓒ REFL PAV MRK TY I & II (W)(SLD)(8")
- Ⓓ REFL PAV MRK TY I & II (W)(DOT)(4")
- Ⓔ REFL PAV MRK TY I & II (W)(SLD)(12")
- Ⓕ REFL PAV MRK TY I & II (W)(SLD)(24")
- Ⓛ REFL PAV MRK TY I & II (W)(LNDP)(12")
- Ⓖ REFL PAV MRK TY I & II (W)(ARROW)
- Ⓗ REFL PAV MRK TY I & II (W)(DBL ARROW)
- Ⓣ REFL PAV MRK TY I & II (W)(TND ARROW)
- Ⓘ REFL PAV MRK TY I & II (W)(WORD)
- Ⓙ REFL PAV MRK TY I & II (W)(ENT GORE)
- Ⓚ REFL PAV MRK TY I & II (Y)(SLD)(4")
- Ⓜ REFL PAV MRK TY I & II (Y)(SLD)(8")
- Ⓝ REFL PAV MRK TY I & II (Y)(SLD)(12")
- Ⓢ REFL PAV MRK TY I & II (Y)(SLD)(24")
- Ⓓ RAIS PAV MRKR CL B (REFL) TY I-A
- Ⓡ RAIS PAV MRKR CL B (REFL) TY II-C-R
- Ⓞ RAIS PAV MRKR CL B (REFL) TY II-A-A

SIGNING AND DELINEATION LEGEND

- TRAFFIC FLOW ARROWS (PROPOSED)
- TRAFFIC FLOW ARROWS (EXISTING)
- (#) SMALL SIGN TO BE INSTALLED ITEM (644)
- (E) SIGN TO REMAIN IN PLACE
- (#) SIGN TO BE REMOVED ITEM (649)
- (#) SIGN TO BE RELOCATED (ITEM 649)
- [L#] LARGE SIGN TO BE INSTALLED
- SIGN POST FOR SMALL SIGN
- DOUBLE POSTED SIGN
- SIGN POST, BACK TO BACK SMALL SIGNS
- "K" MARKER
- DELINEATOR (D-SW) (A)
- DELINEATOR (D-SY) (A)
- DELINEATOR (D-DW) (A)
- OBJECT MARKER (OM-2VP)
- OBJECT MARKER (OM-2SR)
- OBJECT MARKER (OB-3B)

NOTE:

SEE SIGNING AND PAVEMENT MARKINGS UNIROYAL ROAD SHEET FOR SIGNING AND STRIPING DETAILS THROUGH THE UNIROYAL INTERSECTION.

0 50 100
SCALE: 1" = 100'

STATE OF TEXAS SIDNEY S. AFONSO 88055 REGISTERED PROFESSIONAL ENGINEER

THE SEAL APPEARING ON THIS DOCUMENT WAS AUTHORIZED BY SIDNEY S. AFONSO PE 88055, ON MAY 30, 2003

KBR
Engineered by KBR Technical Services, Inc

©2003 Texas Department of Transportation

IH 35
LOOP 20 TO UNIROYAL ROAD
SIGNING AND PAVEMENT MARKINGS
STA 430+00 TO STA 440+00
SHEET 31 OF 33

FED RD DIV NO	FEDERAL AID PROJECT NO	SHEET NO
6	NH-2002 (79)	733A
STATE	STATE DIST	COUNTY
TEXAS	LAREDO	WEBB
CONT	SECT / JOB	HIGHWAY NO
0018	05 / 062, ETC	IH 35

6/2/2003
HOUFILE023 \hcivil\cf0130\
b22lop28.dgn-16

REF FILE(S): j01lop01.utl, utl LV ON = 1-63
j01lop01.eop, eop LV ON = 1-17,19-63
j01lop01.bck, bck LV ON = 2,9,10,14,17,20,21,25,28
j01lop01.alg, alg LV ON = 1-6,35-39
j01lop01.bdr, bdr LV ON = 14,31,45,50,57,58,60-62
j01lop01.spm, spm LV ON = 1-63
milnint.row, row LV ON = 1-22,24-63

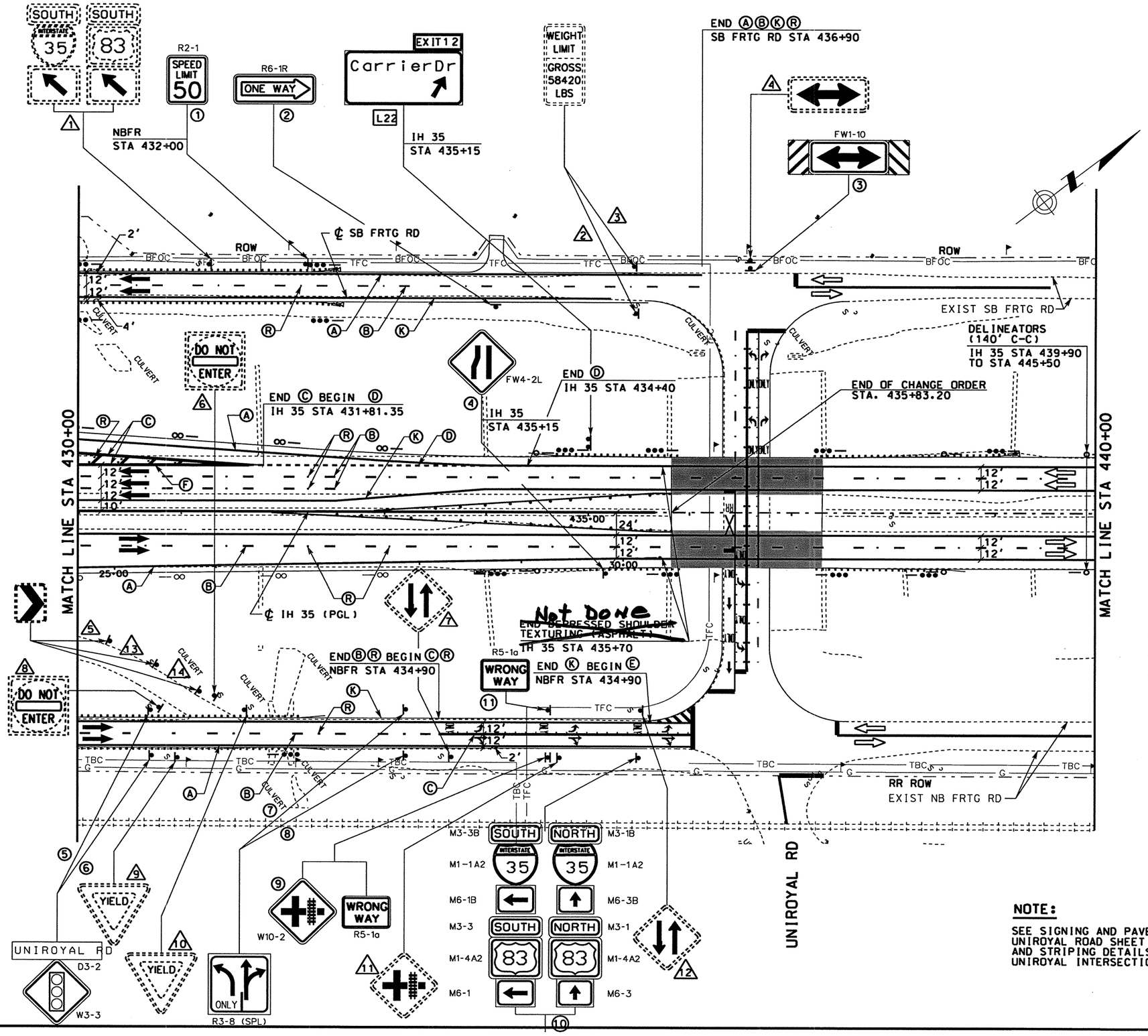

STRIPING LEGEND

- Ⓐ REFL PAV MRK TY I & II (W)(SLD)(4")
- Ⓑ REFL PAV MRK TY I & II (W)(BRK)(4")
- Ⓒ REFL PAV MRK TY I & II (W)(SLD)(8")
- Ⓓ REFL PAV MRK TY I & II (W)(DOT)(4")
- Ⓔ REFL PAV MRK TY I & II (W)(SLD)(12")
- Ⓕ REFL PAV MRK TY I & II (W)(SLD)(24")
- Ⓛ REFL PAV MRK TY I & II (W)(LNDP)(12")
- Ⓖ REFL PAV MRK TY I & II (W)(ARROW)
- Ⓗ REFL PAV MRK TY I & II (W)(DBL ARROW)
- Ⓣ REFL PAV MRK TY I & II (W)(TND ARROW)
- Ⓘ REFL PAV MRK TY I & II (W)(WORD)
- Ⓙ REFL PAV MRK TY I & II (W)(ENT GORE)
- Ⓚ REFL PAV MRK TY I & II (Y)(SLD)(4")
- Ⓜ REFL PAV MRK TY I & II (Y)(SLD)(8")
- Ⓝ REFL PAV MRK TY I & II (Y)(SLD)(12")
- Ⓢ REFL PAV MRK TY I & II (Y)(SLD)(24")
- Ⓞ RAIS PAV MRKR CL B (REFL) TY I-A
- Ⓡ RAIS PAV MRKR CL B (REFL) TY II-C-R
- Ⓞ RAIS PAV MRKR CL B (REFL) TY II-A-A

SIGNING AND DELINEATION LEGEND

- TRAFFIC FLOW ARROWS ~~(PROPOSED)~~
- TRAFFIC FLOW ARROWS (EXISTING)
- (#) SMALL SIGN TO BE INSTALLED ITEM (644)
- (E) SIGN TO REMAIN IN PLACE
- (#) SIGN TO BE REMOVED ITEM (649)
- (#) SIGN TO BE RELOCATED (ITEM 649)
- [L#] LARGE SIGN TO BE INSTALLED
- SIGN POST FOR SMALL SIGN
- DOUBLE POSTED SIGN
- SIGN POST, BACK TO BACK SMALL SIGNS
- "K" MARKER
- DELINEATOR (D-SW) (A)
- DELINEATOR (D-SY) (A)
- DELINEATOR (D-DW) (A)
- OBJECT MARKER (OM-2VP)
- OBJECT MARKER (OM-2SR)
- OBJECT MARKER (OB-3B)

STATE OF TEXAS
JAIME A. VELA, JR.
92045
LICENSED PROFESSIONAL ENGINEER

The seal appearing on this document was authorized by JAIME A. VELA, JR. P.E. 92045, on 12/05, 2006

Jaime A. Vela, Jr., P.E.

NOTE:

SEE SIGNING AND PAVEMENT MARKINGS UNIROYAL ROAD SHEET FOR SIGNING AND STRIPING DETAILS THROUGH THE UNIROYAL INTERSECTION.

HORIZ: 1"= 100'

TEXAS DEPARTMENT OF TRANSPORTATION
© 2006

IH35
LOOP 20 TO UNIROYAL ROAD
SIGNING AND PAVEMENT MARKINGS

DN: JAV DW: OJC
CK: JAV CK: RM

FED.RD. DIV.NO.	STATE PROJECT NO.					SHEET NO.
6	NH 2002 (79)		SHEET 31 OF 33			79A
STATE	STATE DIST.NO.	COUNTY	CONTROL	SECTION	JOB	HIGHWAY NO.
TEXAS	22	WEBB	0018	05	062	IH 35

12/5/2006 ocostil T:\PROJECTS\No-CSJ Assigned\Uniroyal_Interchange\Signing&Pavement Marking\b22lop28.dgn

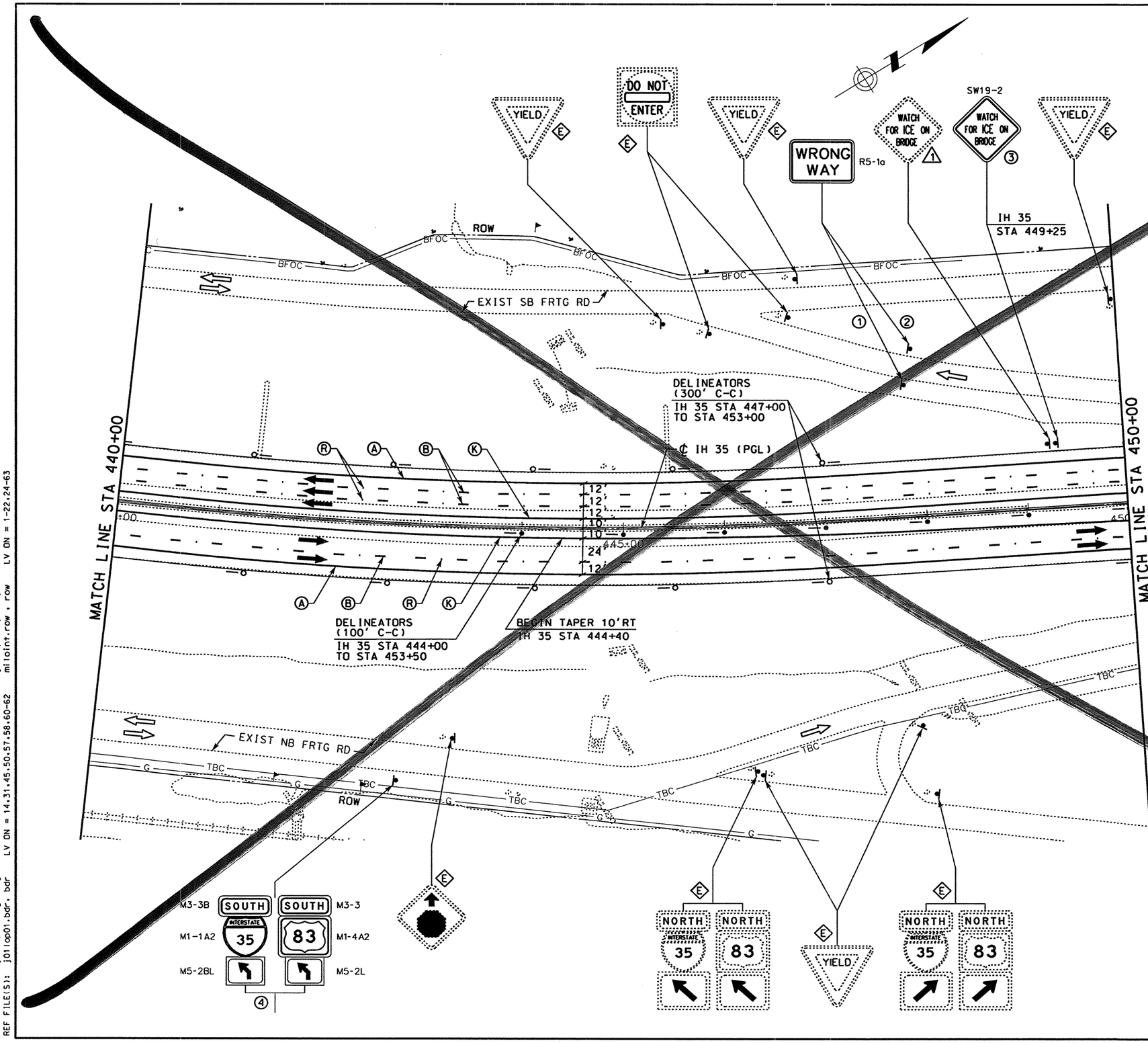

STRIPING LEGEND

- (A) REFL PAV MRK TY I & II (W)(SLD)(4")
- (B) REFL PAV MRK TY I & II (W)(BRK)(4")
- (C) REFL PAV MRK TY I & II (W)(SLD)(8")
- (D) REFL PAV MRK TY I & II (W)(DOT)(4")
- (E) REFL PAV MRK TY I & II (W)(SLD)(12")
- (F) REFL PAV MRK TY I & II (W)(SLD)(24")
- (L) REFL PAV MRK TY I & II (W)(LNDP)(12")
- (G) REFL PAV MRK TY I & II (W)(ARROW)
- (H) REFL PAV MRK TY I & II (W)(DBL ARROW)
- (T) REFL PAV MRK TY I & II (W)(TND ARROW)
- (I) REFL PAV MRK TY I & II (W)(WORD)
- (J) REFL PAV MRK TY I & II (W)(ENT GORE)
- (K) REFL PAV MRK TY I & II (Y)(SLD)(4")
- (M) REFL PAV MRK TY I & II (Y)(SLD)(8")
- (N) REFL PAV MRK TY I & II (Y)(SLD)(12")
- (S) REFL PAV MRK TY I & II (Y)(SLD)(24")
- (O) RAIS PAV MRKR CL B (REFL) TY I-A
- (R) RAIS PAV MRKR CL B (REFL) TY II-C-R
- (Q) RAIS PAV MRKR CL B (REFL) TY II-A-A

SIGNING AND DELINEATION LEGEND

- TRAFFIC FLOW ARROWS (PROPOSED)
- TRAFFIC FLOW ARROWS (EXISTING)
- (#) SMALL SIGN TO BE INSTALLED ITEM (644)
- (E) SIGN TO REMAIN IN PLACE
- (#) SIGN TO BE REMOVED ITEM (649)
- (#) SIGN TO BE RELOCATED (ITEM 649)
- [L#] LARGE SIGN TO BE INSTALLED
- SIGN POST FOR SMALL SIGN
- DOUBLE POSTED SIGN
- SIGN POST, BACK TO BACK SMALL SIGNS
- "K" MARKER
- DELINEATOR (D-SW) (A)
- DELINEATOR (D-SY) (A)
- DELINEATOR (D-DW) (A)
- OBJECT MARKER (OM-2VP)
- OBJECT MARKER (OM-2SR)
- OBJECT MARKER (OB-3B)

0 50 100
SCALE: 1" = 100'

STATE OF TEXAS
SIDNEY S. AFONSO
P.E. 88055
REGISTERED PROFESSIONAL ENGINEER

THE SEAL APPEARING ON THIS DOCUMENT WAS AUTHORIZED BY SIDNEY S. AFONSO PE 88055, ON MAY 30, 2003

KBR
Engineered by KBR Technical Services, Inc

©2003 Texas Department of Transportation

IH 35
LOOP 20 TO UNIROYAL ROAD
SIGNING AND PAVEMENT MARKINGS
STA 440+00 TO STA 450+00
SHEET 32 OF 33

FED RD DIV NO	FEDERAL AID PROJECT NO		SHEET NO
6	NH-2002 (79)		799B
STATE	STATE DIST		COUNTY
TEXAS	LAREDO		WEBB
CONT	SECT	JOB	HIGHWAY NO
0018	05	062, ETC	IH 35

6/2/2003
HOUFILE023 \hcivil\c10130\
b22lop29.dgn-08

REF FILE(S): j01lop01.bdr, bdr LV ON = 14,31,45,50,57,58,60-62
j01lop01.alg, alg LV ON = 1-6,35-39
j01lop01.bck, bck LV ON = 2,9,10,14,17,20,21,25,28
j01lop01.eop, eop LV ON = 1-17,19-63
j01lop01.uti, uti LV ON = 1-63
j01lop01.row, row LV ON = 1-22,24-63
milointr.row, row
j01lop01.spm, spm

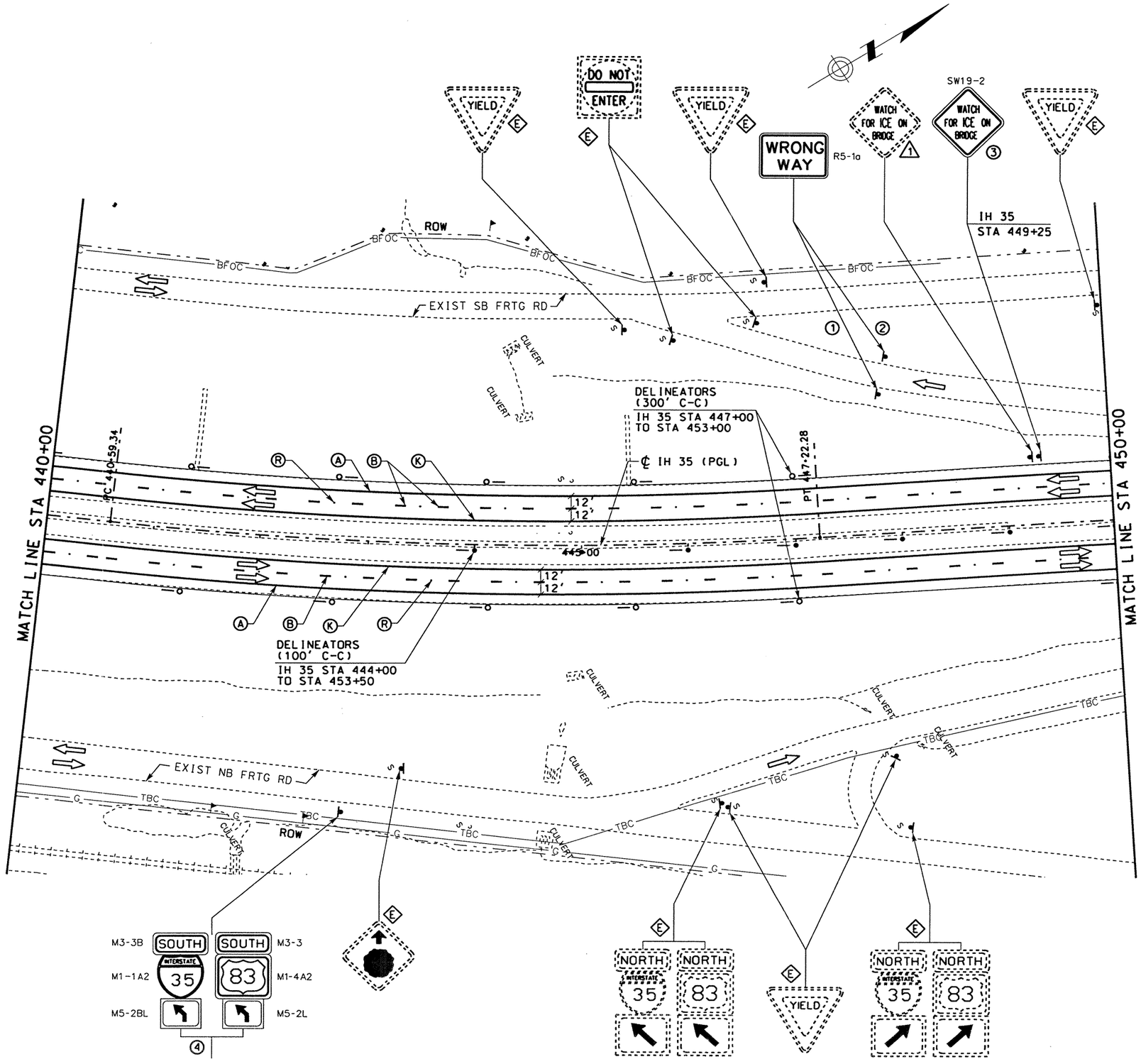

STRIPING LEGEND

- (A) REFL PAV MRK TY I & II (W)(SLD)(4")
- (B) REFL PAV MRK TY I & II (W)(BRK)(4")
- (C) REFL PAV MRK TY I & II (W)(SLD)(8")
- (D) REFL PAV MRK TY I & II (W)(DOT)(4")
- (E) REFL PAV MRK TY I & II (W)(SLD)(12")
- (F) REFL PAV MRK TY I & II (W)(SLD)(24")
- (L) REFL PAV MRK TY I & II (W)(LNDP)(12")
- (G) REFL PAV MRK TY I & II (W)(ARROW)
- (H) REFL PAV MRK TY I & II (W)(DBL ARROW)
- (T) REFL PAV MRK TY I & II (W)(TND ARROW)
- (I) REFL PAV MRK TY I & II (W)(WORD)
- (J) REFL PAV MRK TY I & II (W)(ENT GORE)
- (K) REFL PAV MRK TY I & II (Y)(SLD)(4")
- (M) REFL PAV MRK TY I & II (Y)(SLD)(8")
- (N) REFL PAV MRK TY I & II (Y)(SLD)(12")
- (S) REFL PAV MRK TY I & II (Y)(SLD)(24")
- (O) RAIS PAV MRKR CL B (REFL) TY I-A
- (R) RAIS PAV MRKR CL B (REFL) TY II-C-R
- (Q) RAIS PAV MRKR CL B (REFL) TY II-A-A

SIGNING AND DELINEATION LEGEND

- TRAFFIC FLOW ARROWS (PROPOSED)
- TRAFFIC FLOW ARROWS (EXISTING)
- (#) SMALL SIGN TO BE INSTALLED ITEM (644)
- (E) SIGN TO REMAIN IN PLACE
- (#) SIGN TO BE REMOVED ITEM (649)
- (#) SIGN TO BE RELOCATED (ITEM 649)
- [L#] LARGE SIGN TO BE INSTALLED
- SIGN POST FOR SMALL SIGN
- DOUBLE POSTED SIGN
- SIGN POST, BACK TO BACK SMALL SIGNS
- "K" MARKER
- DELINEATOR (D-SW) (A)
- DELINEATOR (D-SY) (A)
- DELINEATOR (D-DW) (A)
- OBJECT MARKER (OM-2VP)
- OBJECT MARKER (OM-2SR)
- OBJECT MARKER (OB-3B)

STATE OF TEXAS
JAIME A. VELA, JR.
92045
LICENSED PROFESSIONAL ENGINEER

The seal appearing on this document was authorized by JAIME A. VELA, JR. P.E. 92045, on 12/05, 20 06

Jaime A. Vela, P.E.

HORIZ: 1" = 100'

TEXAS DEPARTMENT OF TRANSPORTATION
© 2006

IH35
LOOP 20 TO UNIROYAL ROAD
SIGNING AND PAVEMENT
MARKINGS

DN: JAV	DW: OJC
CK: JAV	CK: RM

FED.RD. DIV.NO.	STATE PROJECT NO.					SHEET NO.
6	NH 2002 (79)		SHEET 32 OF 33			799B
STATE	STATE DIST.NO.	COUNTY	CONTROL	SECTION	JOB	HIGHWAY NO.
TEXAS	22	WEBB	0018	05	062	IH 35

12/4/2006 ocostil t:\projects\no-csj assigned\uniroyal_interchange\signing&pavement marking\b22lop29.dgn

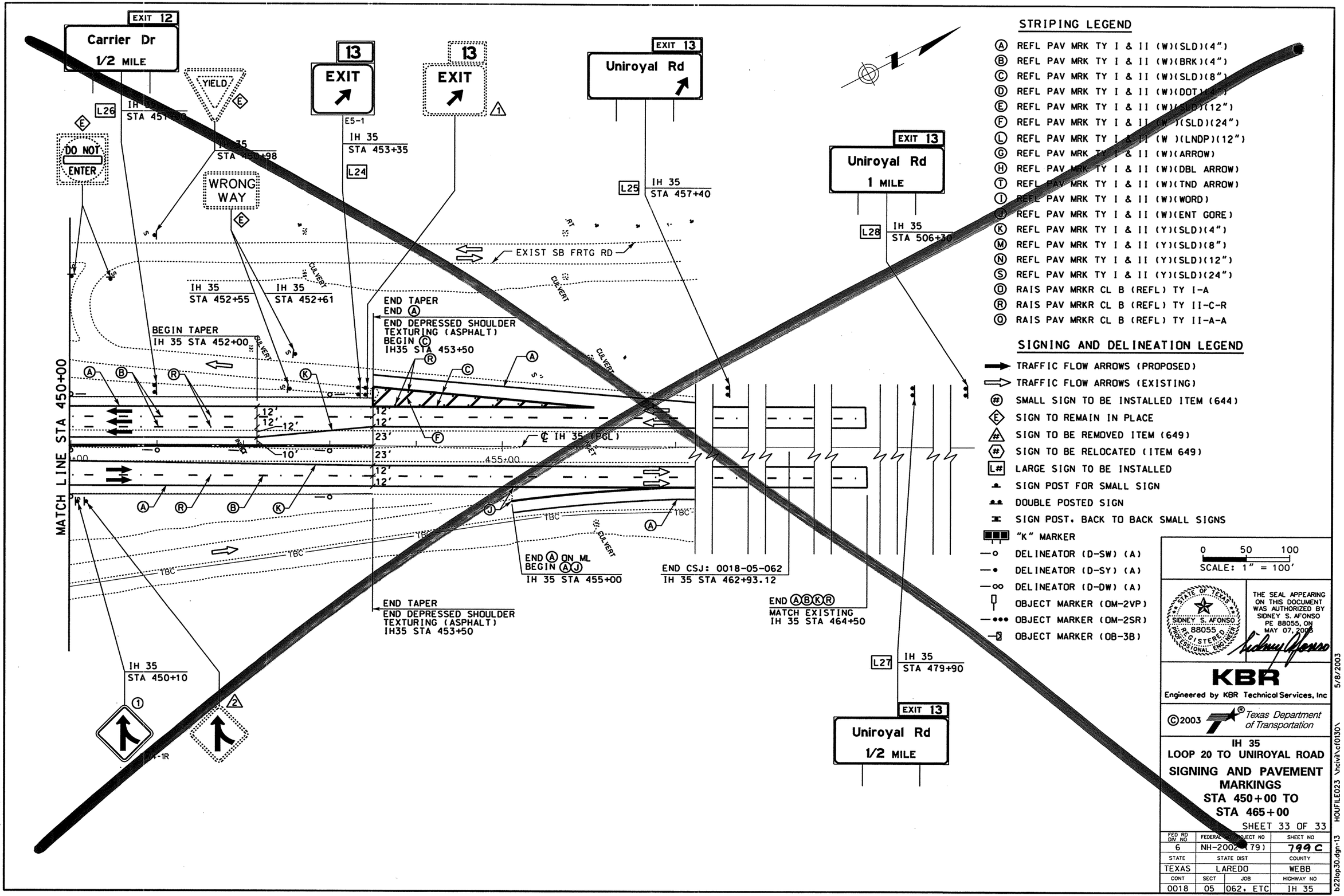

STRIPING LEGEND

- (A) REFL PAV MRK TY I & II (W)(SLD)(4")
- (B) REFL PAV MRK TY I & II (W)(BRK)(4")
- (C) REFL PAV MRK TY I & II (W)(SLD)(8")
- (D) REFL PAV MRK TY I & II (W)(DOT)(4")
- (E) REFL PAV MRK TY I & II (W)(SLD)(12")
- (F) REFL PAV MRK TY I & II (W)(SLD)(24")
- (L) REFL PAV MRK TY I & II (W)(LNDP)(12")
- (G) REFL PAV MRK TY I & II (W)(ARROW)
- (H) REFL PAV MRK TY I & II (W)(DBL ARROW)
- (T) REFL PAV MRK TY I & II (W)(TND ARROW)
- (I) REFL PAV MRK TY I & II (W)(WORD)
- (J) REFL PAV MRK TY I & II (W)(ENT GORE)
- (K) REFL PAV MRK TY I & II (Y)(SLD)(4")
- (M) REFL PAV MRK TY I & II (Y)(SLD)(8")
- (N) REFL PAV MRK TY I & II (Y)(SLD)(12")
- (S) REFL PAV MRK TY I & II (Y)(SLD)(24")
- (D) RAIS PAV MRKR CL B (REFL) TY I-A
- (R) RAIS PAV MRKR CL B (REFL) TY II-C-R
- (Q) RAIS PAV MRKR CL B (REFL) TY II-A-A

SIGNING AND DELINEATION LEGEND

- TRAFFIC FLOW ARROWS (PROPOSED)
- TRAFFIC FLOW ARROWS (EXISTING)
- (#) SMALL SIGN TO BE INSTALLED ITEM (644)
- (E) SIGN TO REMAIN IN PLACE
- (#) SIGN TO BE REMOVED ITEM (649)
- (#) SIGN TO BE RELOCATED (ITEM 649)
- [L#] LARGE SIGN TO BE INSTALLED
- SIGN POST FOR SMALL SIGN
- DOUBLE POSTED SIGN
- SIGN POST, BACK TO BACK SMALL SIGNS
- "K" MARKER
- DELINEATOR (D-SW) (A)
- DELINEATOR (D-SY) (A)
- DELINEATOR (D-DW) (A)
- OBJECT MARKER (OM-2VP)
- OBJECT MARKER (OM-2SR)
- OBJECT MARKER (OB-3B)

0 50 100
SCALE: 1" = 100'

STATE OF TEXAS
SIDNEY S. AFONSO
88055
REGISTERED PROFESSIONAL ENGINEER

THE SEAL APPEARING ON THIS DOCUMENT WAS AUTHORIZED BY SIDNEY S. AFONSO PE 88055, ON MAY 07, 2003

KBR
Engineered by KBR Technical Services, Inc

©2003 Texas Department of Transportation

IH 35
LOOP 20 TO UNIROYAL ROAD
SIGNING AND PAVEMENT MARKINGS
STA 450+00 TO
STA 465+00

SHEET 33 OF 33

FED RD DIV NO	FEDERAL AID PROJECT NO	SHEET NO
6	NH-2002 (79)	799C
STATE	STATE DIST	COUNTY
TEXAS	LAREDO	WEBB
CONT	SECT / JOB	HIGHWAY NO
0018	05 / 062, ETC	IH 35

5/8/2003

HOUFILE023 \hcivil\cf0130\

b22lop30.dgn-13

REF FILE(S): j01lop01.bdr, bdr LV ON = 14.31.45.50.57.58.60-62
j01lop01.alg, alg LV ON = 1-6.35-39
j01lop01.bck, bck LV ON = 2.9.10.14.17.20.21.25.28
j01lop01.eop, eop LV ON = 1-17.19-63
j01lop01.uti, uti LV ON = 1-63
j01lop01.row, row LV ON = 1-22.24-63
j01lop01.spm, spm LV ON = 24
milpoint.row, row

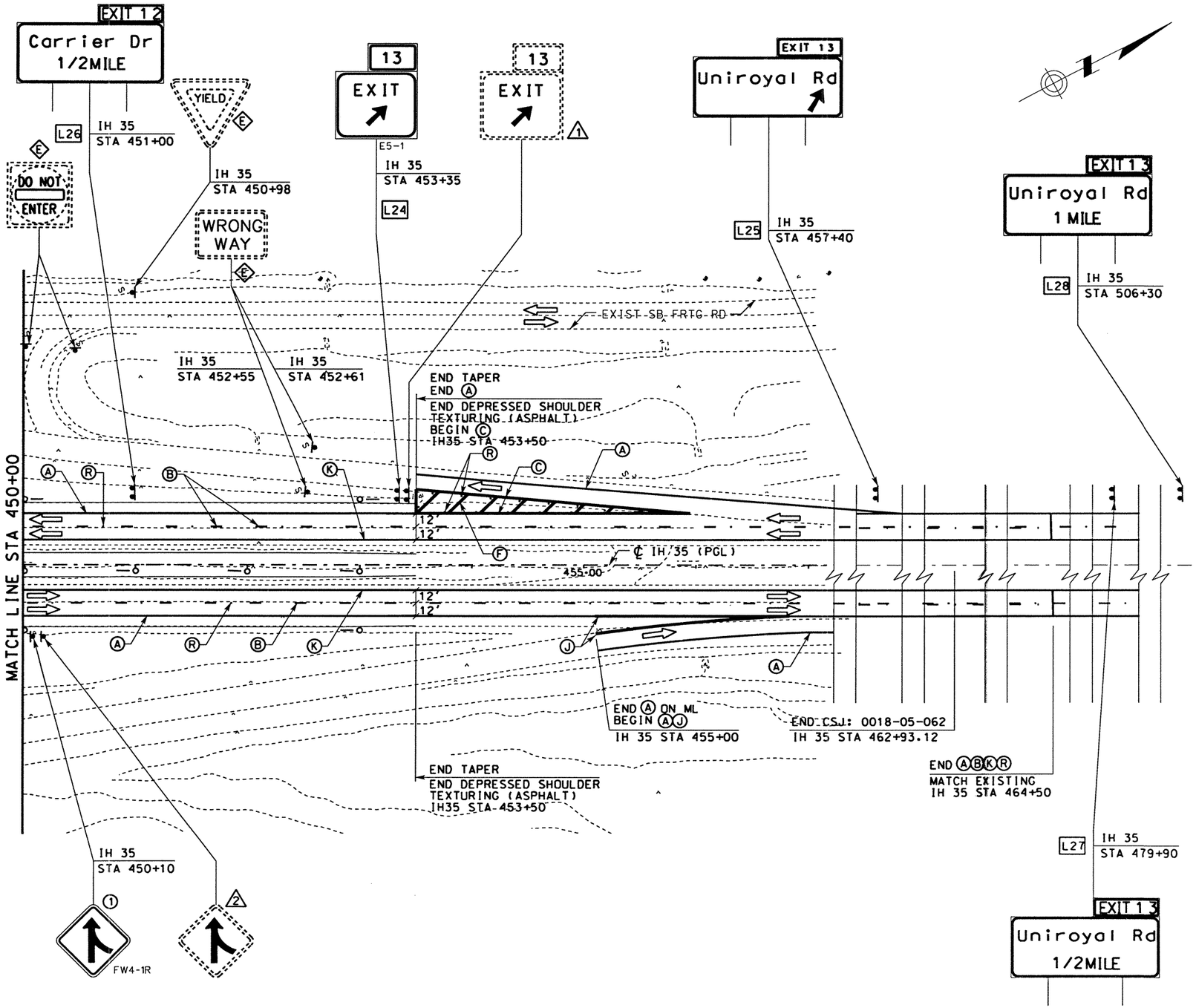

STRIPING LEGEND

- (A) REFL PAV MRK TY I & II (W)(SLD)(4")
- (B) REFL PAV MRK TY I & II (W)(BRK)(4")
- (C) REFL PAV MRK TY I & II (W)(SLD)(8")
- (D) REFL PAV MRK TY I & II (W)(DOT)(4")
- (E) REFL PAV MRK TY I & II (W)(SLD)(12")
- (F) REFL PAV MRK TY I & II (W)(SLD)(24")
- (L) REFL PAV MRK TY I & II (W)(LNDP)(12")
- (G) REFL PAV MRK TY I & II (W)(ARROW)
- (H) REFL PAV MRK TY I & II (W)(DBL ARROW)
- (T) REFL PAV MRK TY I & II (W)(TND ARROW)
- (I) REFL PAV MRK TY I & II (W)(WORD)
- (J) REFL PAV MRK TY I & II (W)(ENT GORE)
- (K) REFL PAV MRK TY I & II (Y)(SLD)(4")
- (M) REFL PAV MRK TY I & II (Y)(SLD)(8")
- (N) REFL PAV MRK TY I & II (Y)(SLD)(12")
- (S) REFL PAV MRK TY I & II (Y)(SLD)(24")
- (O) RAIS PAV MRKR CL B (REFL) TY I-A
- (R) RAIS PAV MRKR CL B (REFL) TY II-C-R
- (O) RAIS PAV MRKR CL B (REFL) TY II-A-A

SIGNING AND DELINEATION LEGEND

- TRAFFIC FLOW ARROWS (PROPOSED)
- TRAFFIC FLOW ARROWS (EXISTING)
- (#) SMALL SIGN TO BE INSTALLED ITEM (644)
- (E) SIGN TO REMAIN IN PLACE
- (#) SIGN TO BE REMOVED ITEM (649)
- (#) SIGN TO BE RELOCATED (ITEM 649)
- [L#] LARGE SIGN TO BE INSTALLED
- SIGN POST FOR SMALL SIGN
- DOUBLE POSTED SIGN
- SIGN POST. BACK TO BACK SMALL SIGNS
- "K" MARKER
- DELINEATOR (D-SW) (A)
- DELINEATOR (D-SY) (A)
- DELINEATOR (D-DW) (A)
- OBJECT MARKER (OM-2VP)
- OBJECT MARKER (OM-2SR)
- OBJECT MARKER (OB-3B)

STATE OF TEXAS
JAIME A. VELA, JR.
92045
LICENSED
PROFESSIONAL ENGINEER

The seal appearing on this document was authorized by JAIME A. VELA, JR. P.E. 92045, on 12/05, 20 06

Jaime A. Vela, Jr., P.E.

HORIZ: 1" = 100'

TEXAS DEPARTMENT OF TRANSPORTATION
© 2006

IH35
LOOP 20 TO UNIROYAL ROAD
SIGNING AND PAVEMENT
MARKINGS

DN: JAV	DW: OJC
CK: JAV	CK: RM

FED.RD. DIV.NO.	STATE PROJECT NO.					SHEET NO.
6	NH 2002 (79)		SHEET 33 OF 33			77AC
STATE	STATE DIST.NO.	COUNTY	CONTROL	SECTION	JOB	HIGHWAY NO.
TEXAS	22	WEBB	0018	05	062	IH 35

12/4/2006 ocostil t:\projects\no-csj assigned\uniroyal_interchange\signing&pavement marking\b22lop30.dgn

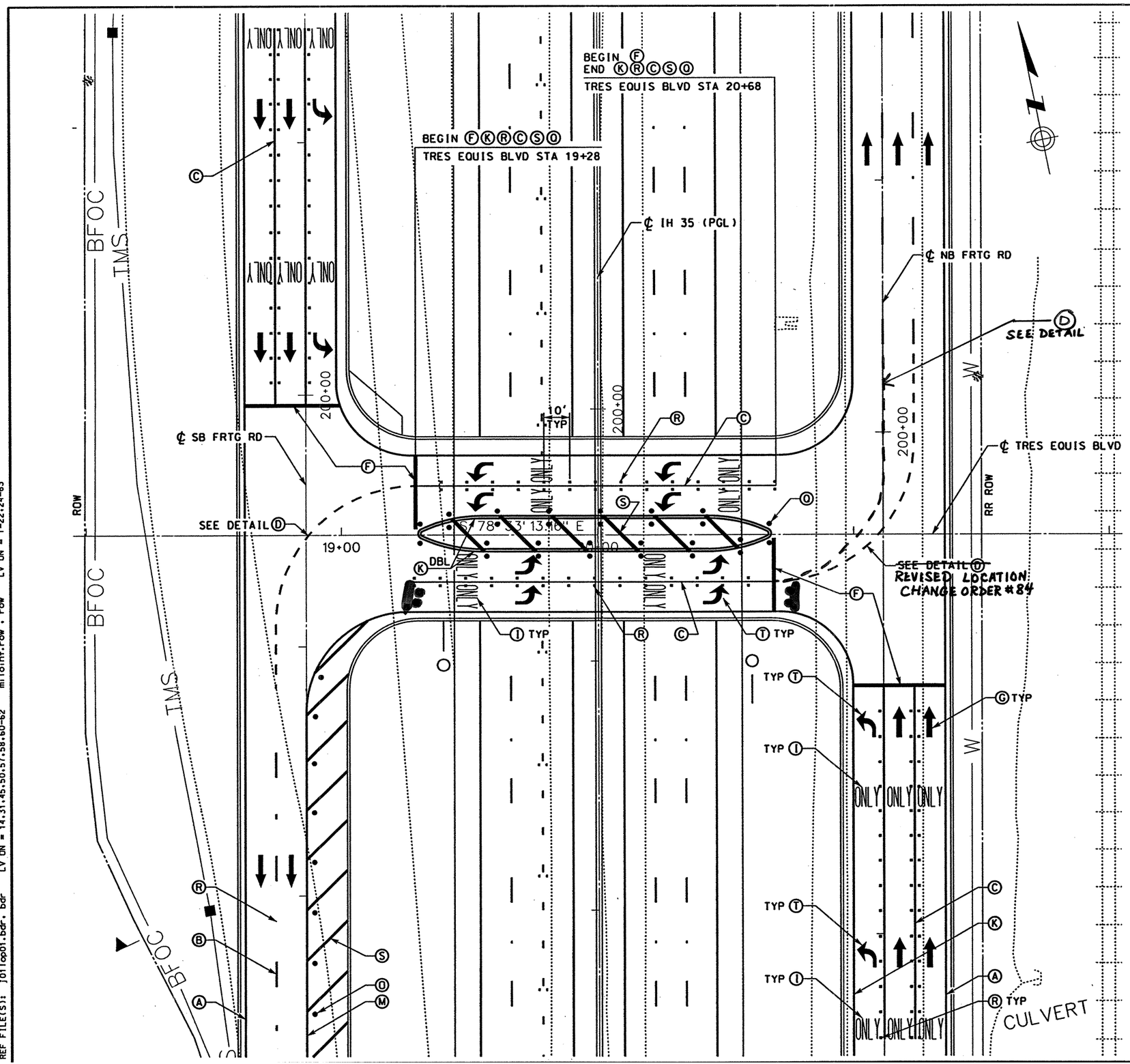

STRIPING LEGEND

- Ⓐ REFL PAV MRK TY I & II (W)(SLD)(4")
- Ⓑ REFL PAV MRK TY I & II (W)(BRK)(4")
- Ⓒ REFL PAV MRK TY I & II (W)(SLD)(8")
- Ⓓ REFL PAV MRK TY I & II (W)(DOT)(4")
- Ⓔ REFL PAV MRK TY I & II (W)(SLD)(12")
- Ⓕ REFL PAV MRK TY I & II (W)(SLD)(24")
- Ⓖ REFL PAV MRK TY I & II (W)(ARROW)
- Ⓗ REFL PAV MRK TY I & II (W)(DBL ARROW)
- Ⓣ REFL PAV MRK TY I & II (W) (TND ARROW)
- Ⓘ REFL PAV MRK TY I & II (W)(WORD)
- Ⓙ REFL PAV MRK TY I & II (W)(ENT GORE)
- Ⓚ REFL PAV MRK TY I & II (Y)(SLD)(4")
- Ⓜ REFL PAV MRK TY I & II (Y)(SLD)(8")
- Ⓝ REFL PAV MRK TY I & II (Y)(SLD)(12")
- Ⓢ REFL PAV MRK TY I & II (Y)(SLD)(24")
- Ⓞ RAIS PAV MRKR CL B (REFL) TY I-A
- Ⓡ RAIS PAV MRKR CL B (REFL) TY II-C-R
- Ⓞ RAIS PAV MRKR CL B (REFL) TY II-A-A

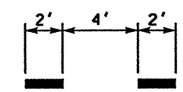

DETAIL Ⓓ
NTS

0 20 40
SCALE: 1" = 40'

STATE OF TEXAS
SIDNEY S. AFONSO
88055
REGISTERED PROFESSIONAL ENGINEER

THE SEAL APPEARING ON THIS DOCUMENT WAS AUTHORIZED BY SIDNEY S. AFONSO PE 88055, ON APRIL 18, 2003

KBR
Engineered by KBR Technical Services, Inc

©2003 Texas Department of Transportation

IH 35
LOOP 20 TO UNIROYAL ROAD
PAVEMENT MARKINGS
TRES EQUIS BLVD
OVERPASS

SHEET 1 OF 1

FED RD DIV NO	FEDERAL AID PROJECT NO		SHEET NO
6	NH-2002 (79)		800
STATE	STATE DIST		COUNTY
TEXAS	LAREDO		WEBB
CONT	SECT	JOB	HIGHWAY NO
0018	05	062, ETC	IH 35

4/19/2003
HOUFILE023 \hcivil\c(0130\
b22lop31.dgn-05

REF FILE(S): j01lop01.utl, utl LV ON = 1-63
j01lop01.eop, eop LV ON = 1-17,19-63
j01lop01.bck, bck LV ON = 2,9,10,14,17,20,21,25,28
j01lop01.alg, alg LV ON = 1-6,35-39
j01lop01.bdr, bdr LV ON = 14,31,45,50,57,58,60-62
j01lop01.som, som LV ON = 1-63
mlloint.row, row LV ON = 1-22,24-63

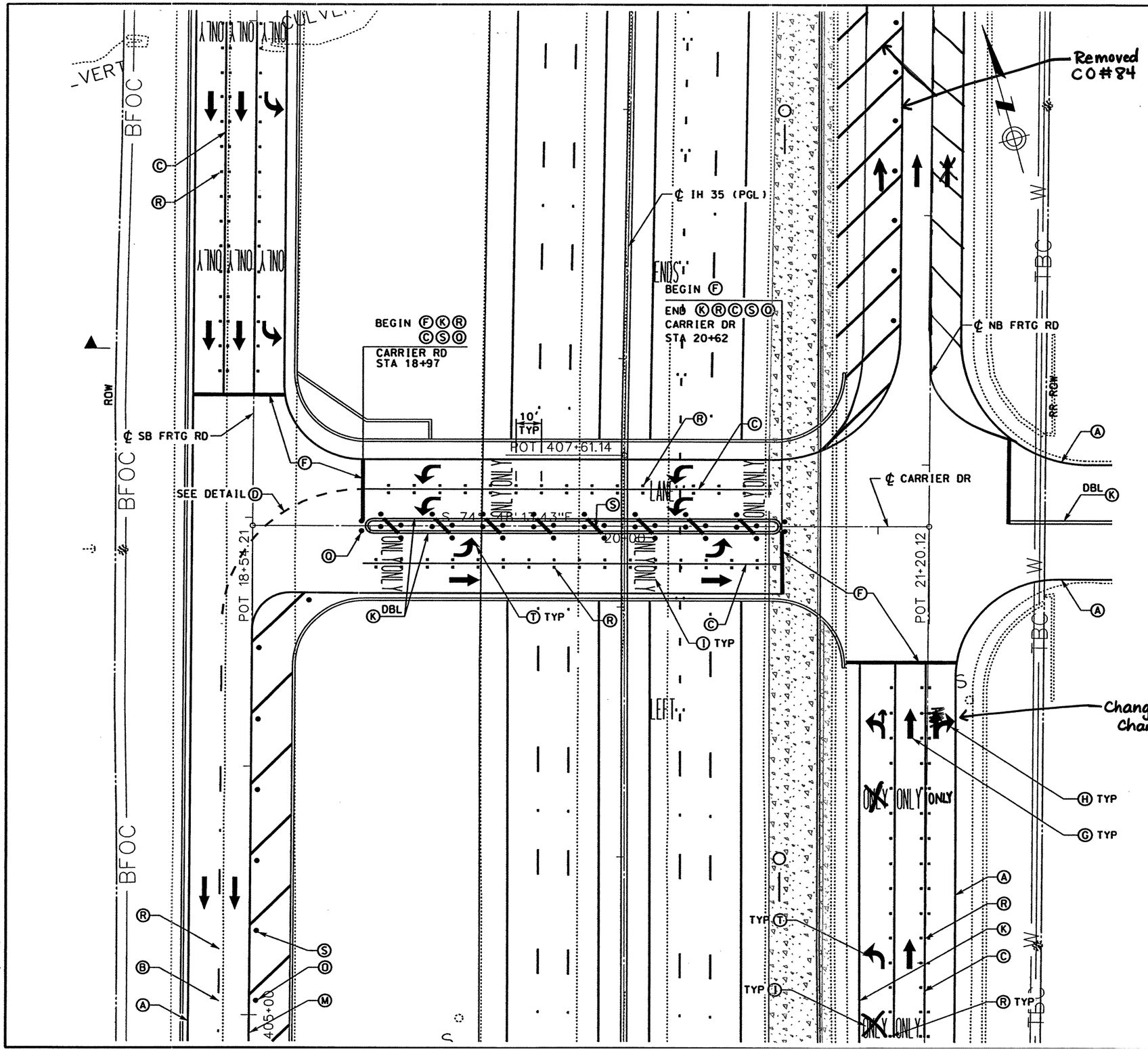

STRIPING LEGEND

- Ⓐ REFL PAV MRK TY I (W)(SLD)(4")
- Ⓑ REFL PAV MRK TY I (W)(BRK)(4")
- Ⓒ REFL PAV MRK TY I (W)(SLD)(8")
- Ⓓ REFL PAV MRK TY I (W)(DOT)(4")
- Ⓔ REFL PAV MRK TY I (W)(SLD)(12")
- Ⓕ REFL PAV MRK TY I (W)(SLD)(24")
- Ⓖ REFL PAV MRK TY I (W)(ARROW)
- Ⓗ REFL PAV MRK TY I (W)(DBL ARROW)
- Ⓣ REFL PAV MRK TY I (W) (TND ARROW)
- Ⓘ REFL PAV MRK TY I (W)(WORD)
- Ⓙ REFL PAV MRK TY I (W)(ENT GORE)
- Ⓚ REFL PAV MRK TY I (Y)(SLD)(4")
- Ⓜ REFL PAV MRK TY I (Y)(SLD)(8")
- Ⓝ REFL PAV MRK TY I (Y)(SLD)(12")
- Ⓢ REFL PAV MRK TY I (Y)(SLD)(24")
- Ⓞ RAIS PAV MRKR CL B (REFL) TY I-A
- Ⓡ RAIS PAV MRKR CL B (REFL) TY II-C-R
- Ⓠ RAIS PAV MRKR CL B (REFL) TY II-A-A

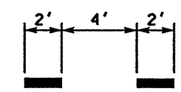

DETAIL Ⓓ
NTS

0 20 40
SCALE: 1" = 40'

STATE OF TEXAS
SIDNEY S. AFONSO
88055
REGISTERED PROFESSIONAL ENGINEER

THE SEAL APPEARING ON THIS DOCUMENT WAS AUTHORIZED BY SIDNEY S. AFONSO PE 88055, ON APRIL 18, 2003

KBR
Engineered by KBR Technical Services, Inc

©2003 Texas Department of Transportation

IH 35
LOOP 20 TO UNIROYAL ROAD
PAVEMENT MARKINGS
CARRIER DRIVE
OVERPASS

SHEET 1 OF 1

FED RD DIV NO	FEDERAL AID PROJECT NO		SHEET NO
6	NH-2002 (79)		801
STATE	STATE DIST		COUNTY
TEXAS	LAREDO		WEBB
CONT	SECT	JOB	HIGHWAY NO
0018	05	062, ETC	IH 35

4/18/2003
HOUFILE023 \hcivil\cf0130\
b22lop32.dgn-05

REF FILE(S): j01lop01.bdr, bdr LV ON = 14,31,45,50,57,58,60-62 j01lop01.alg, alg LV ON = 1-6,35-39 j01lop01.bck, bck LV ON = 2,9,10,14,17,20,21,25,28 j01lop01.eop, eop LV ON = 1-17,19-63 j01lop01.uti, uti LV ON = 1-63
j01lop01.spm, spm LV ON = 1-63 miloint.row, row LV ON = 1-22,24-63

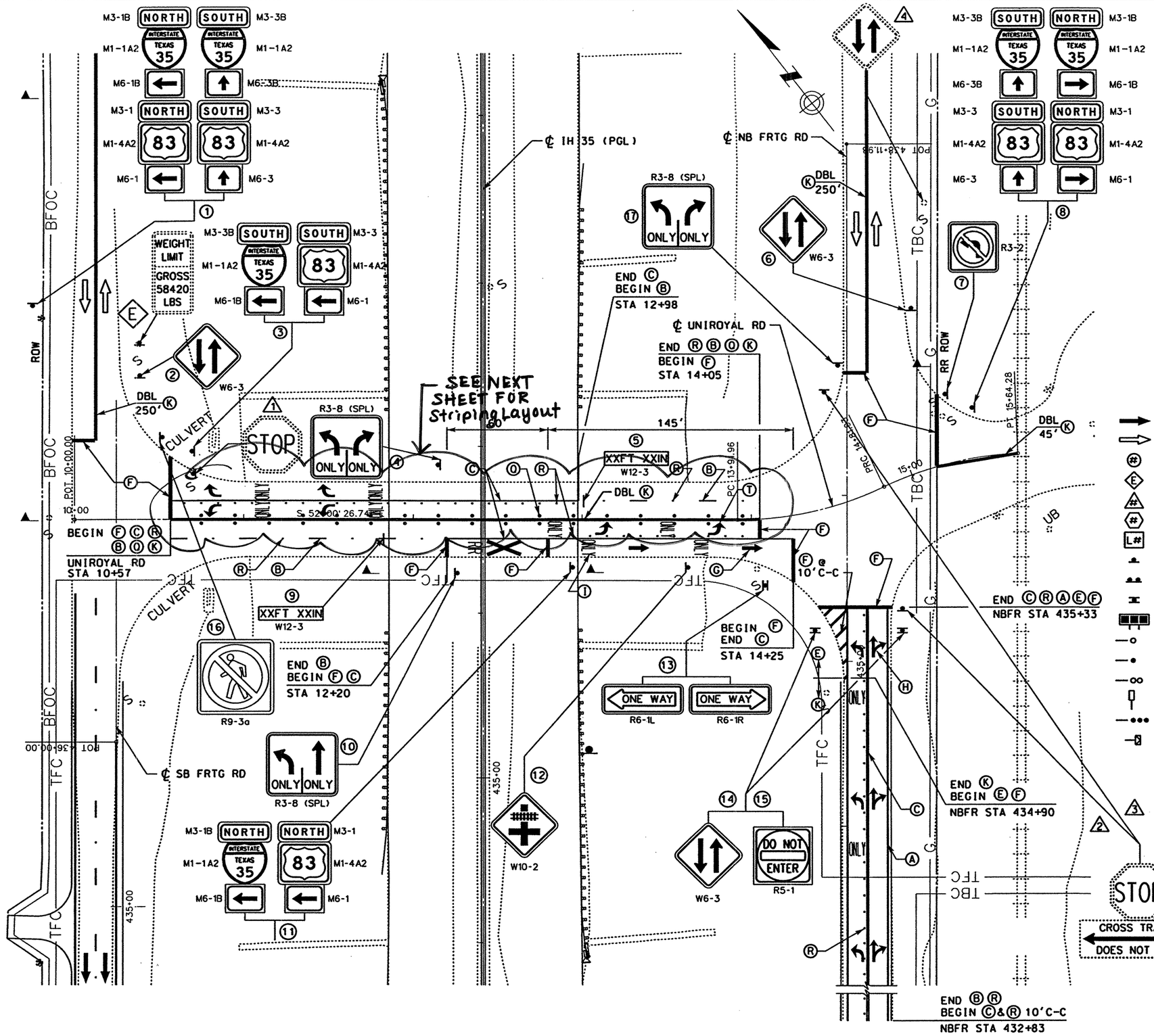

STRIPING LEGEND

- Ⓐ REFL PAV MRK TY I (W)(SLD)(4")
- Ⓑ REFL PAV MRK TY I (W)(BRK)(4")
- Ⓒ REFL PAV MRK TY I (W)(SLD)(8")
- Ⓓ REFL PAV MRK TY I (W)(DOT)(4")
- Ⓔ REFL PAV MRK TY I (W)(SLD)(12")
- Ⓕ REFL PAV MRK TY I (W)(SLD)(24")
- Ⓖ REFL PAV MRK TY I (W)(ARROW)
- Ⓗ REFL PAV MRK TY I (W)(DBL ARROW)
- Ⓣ REFL PAV MRK TY I (W)(TND ARROW)
- Ⓘ REFL PAV MRK TY I (W)(WORD)
- Ⓙ REFL PAV MRK TY I (W)(ENT GORE)
- Ⓚ REFL PAV MRK TY I (Y)(SLD)(4")
- Ⓜ REFL PAV MRK TY I (Y)(SLD)(8")
- Ⓝ REFL PAV MRK TY I (Y)(SLD)(12")
- Ⓢ REFL PAV MRK TY I (Y)(SLD)(24")
- Ⓞ RAIS PAV MRKR CL B (REFL) TY I-A
- Ⓡ RAIS PAV MRKR CL B (REFL) TY II-C-R
- Ⓠ RAIS PAV MRKR CL B (REFL) TY II-A-A

SIGNING AND DELINEATION LEGEND

- TRAFFIC FLOW ARROWS (PROPOSED)
- TRAFFIC FLOW ARROWS (EXISTING)
- SMALL SIGN TO BE INSTALLED ITEM (644)
- SIGN TO REMAIN IN PLACE
- SIGN TO BE REMOVED ITEM (649)
- SIGN TO BE RELOCATED (ITEM 649)
- LARGE SIGN TO BE INSTALLED
- SIGN POST FOR SMALL SIGN
- DOUBLE POSTED SIGN
- SIGN POST, BACK TO BACK SMALL SIGNS
- "K" MARKER
- DELINEATOR (D-SW) (A)
- DELINEATOR (D-SY) (A)
- DELINEATOR (D-DW) (A)
- OBJECT MARKER (OM-2VP)
- OBJECT MARKER (OM-2SR)
- OBJECT MARKER (OB-3B)

0 30 60
SCALE: 1" = 60'

STATE OF TEXAS
SIDNEY S. AFONSO
88055
REGISTERED PROFESSIONAL ENGINEER

THE SEAL APPEARING ON THIS DOCUMENT WAS AUTHORIZED BY SIDNEY S. AFONSO PE 88055, ON APRIL 18, 2003

KBR
Engineered by KBR Technical Services, Inc

©2003 Texas Department of Transportation

IH 35
LOOP 20 TO UNIROYAL ROAD
SIGNING [redacted]
UNIROYAL ROAD

SHEET 1 OF 1

FED RD DIV NO	FEDERAL AID PROJECT NO	SHEET NO
6	NH-2002 (79)	802
STATE	STATE DIST	COUNTY
TEXAS	LAREDO	WEBB
CONT	SECT / JOB	HIGHWAY NO
0018	05 / 062, ETC	IH 35

REF FILE(S): j01lop01.utl, utl LV ON = 1-63; j01lop01.eop, eop LV ON = 1-17,19-63; j01lop01.bck, bck LV ON = 2,9,10,14,17,20,21,25,28; j01lop01.alg, alg LV ON = 1-6,35-39; j01lop01.bdr, bdr LV ON = 14,31,45,50,57,58,60-62; j01lop01.spm, spm LV ON = 1-63; miloint.row, row LV ON = 1-22,24-63

b22lop33.dgn-05 HOUFILE023 \hcivil\cf0130\ 4/19/2003

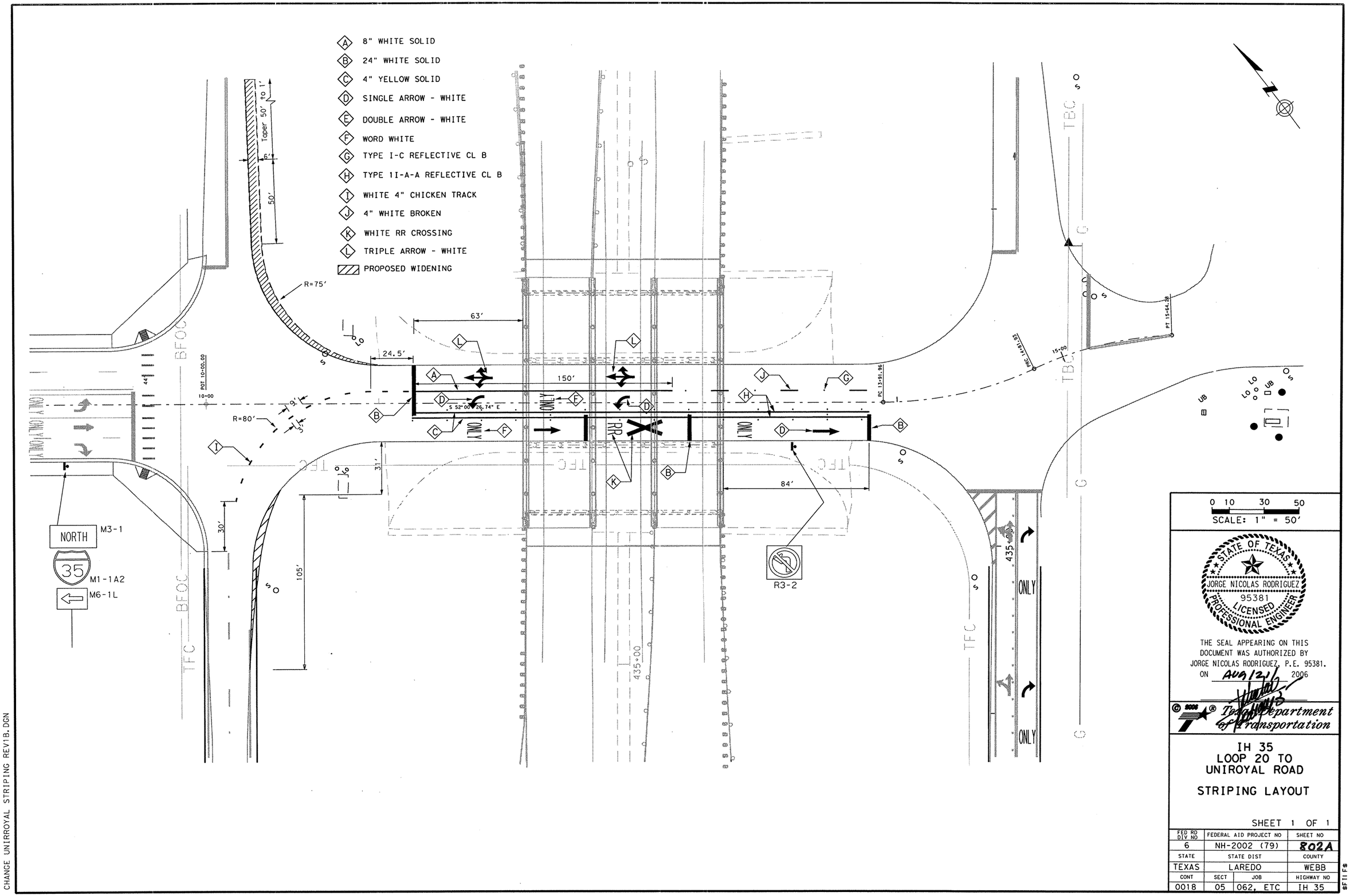

0 10 30 50
SCALE: 1" = 50'

STATE OF TEXAS
JORGE NICOLAS RODRIGUEZ
95381
LICENSED
PROFESSIONAL ENGINEER

THE SEAL APPEARING ON THIS DOCUMENT WAS AUTHORIZED BY JORGE NICOLAS RODRIGUEZ, P.E. 95381. ON AUG 12 2006

© 2006 Texas Department of Transportation

IH 35
LOOP 20 TO
UNIROYAL ROAD

STRIPING LAYOUT

SHEET 1 OF 1

FED RD DIV NO	FEDERAL AID PROJECT NO		SHEET NO
6	NH-2002 (79)		802A
STATE	STATE DIST		COUNTY
TEXAS	LAREDO		WEBB
CONT	SECT	JOB	HIGHWAY NO
0018	05	062, ETC	IH 35

T:\LRDTROPR\FY-2006\Design\Traffic Signals\Uniroyal & IH 35
CHANGE UNIRROYAL STRIPING REV1B.DGN

$FILE$

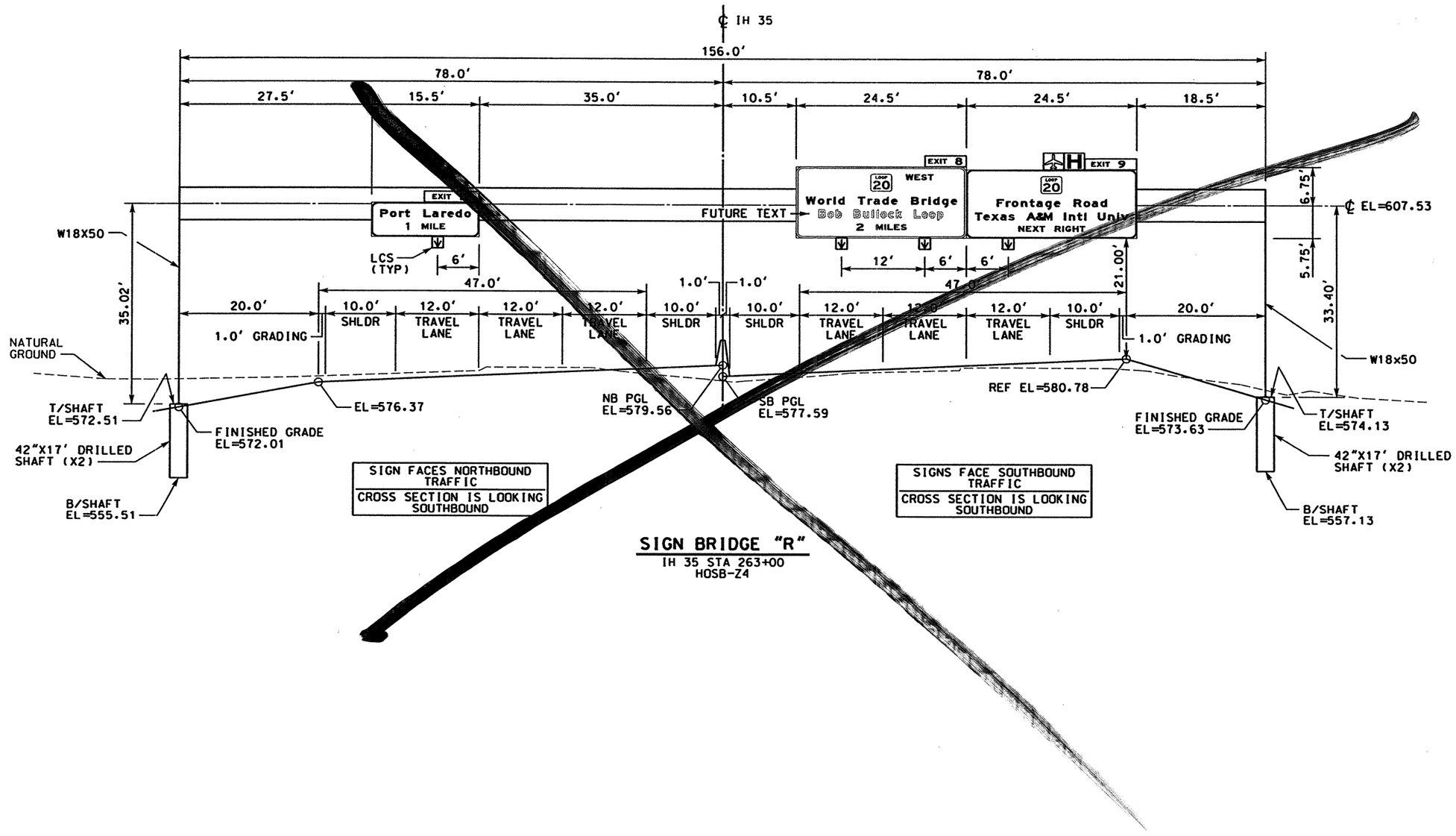

SIGN BRIDGE "R"

IH 35 STA 263+00
HOSB-Z4

NOTE:
ELEVATIONS TO BE VERIFIED PRIOR TO FABRICATION OF SIGN BRIDGE.

STATE OF TEXAS
SIDNEY S. AFONSO
88055
REGISTERED PROFESSIONAL ENGINEER

THE SEAL APPEARING ON THIS DOCUMENT WAS AUTHORIZED BY SIDNEY S. AFONSO PE 88055, ON APRIL 18, 2003

KBR
Engineered by ol Services, Inc

©2003 Texas Department of Transportation

IH 35
LOOP 20 TO UNIROYAL ROAD
SIGN BRIDGE DETAILS

SHEET 1 OF 1

FED RD DIV NO	FEDERAL AID PROJECT NO		SHEET NO
6	NH-2002 (79)		803
STATE	STATE DIST		COUNTY
TEXAS	LAREDO		WEBB
CONT	SECT	JOB	HIGHWAY NO
0018	05	062, ETC	IH 35

REF FILE(S): J011op01.bdr, bdr LV ON = 50,57,58,60-62

b21sdp01.dgn-02 HOUFILE023 \hcivil\cf0130\ 4/17/2003

Lane Control Signals were not installed on Sign Bridge

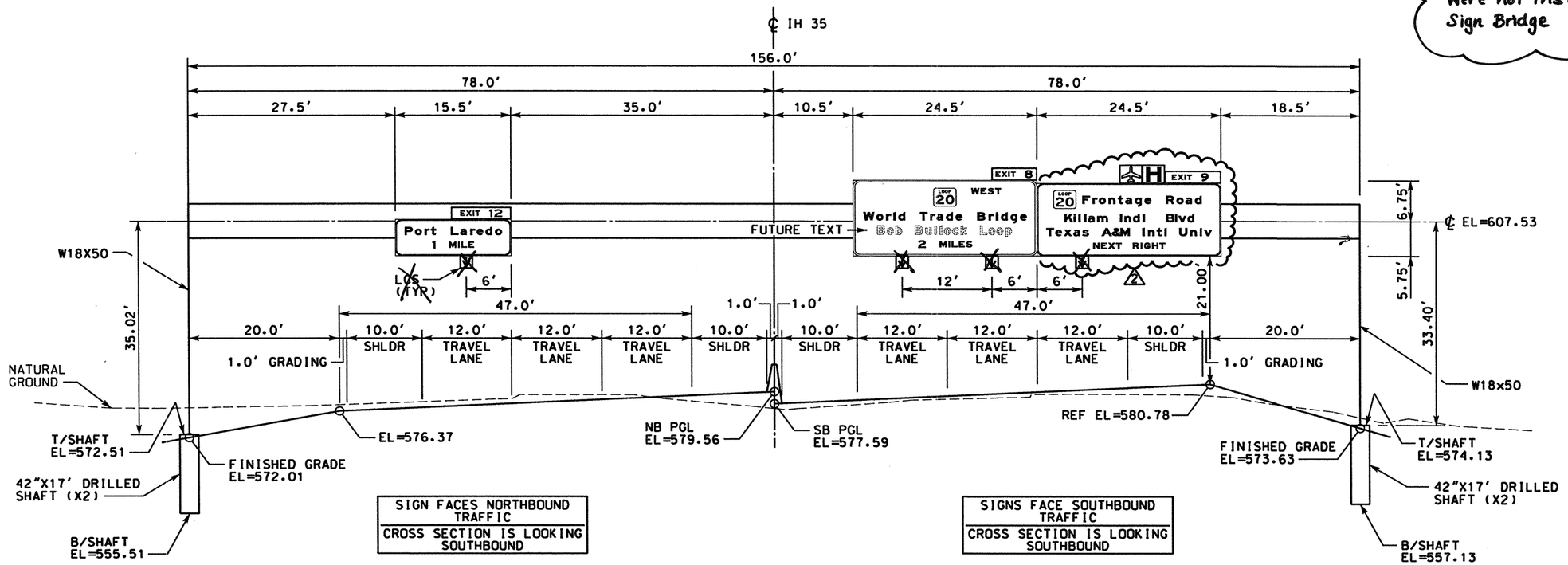

SIGN BRIDGE "R"

IH 35 STA 263+00
HOSB-Z4

NOTE:
ELEVATIONS ~~TO BE~~ VERIFIED PRIOR TO FABRICATION OF SIGN BRIDGE.

DATE	BY	REV	REVISION
11/30/04	AA	2	ADD AUXILIARY LANE

STATE OF TEXAS
SIDNEY S. AFONSO
88055
REGISTERED PROFESSIONAL ENGINEER

THE SEAL APPEARING ON THIS DOCUMENT WAS AUTHORIZED BY SIDNEY S. AFONSO PE 88055, ON FEBRUARY 10, 2005

Sidney Afonso

KBR
Engineered by KBR Technical Services, Inc

©2004 Texas Department of Transportation

IH 35
LOOP 20 TO UNIROYAL ROAD
SIGN BRIDGE DETAILS

SHEET 1 OF 1

FED RD DIV NO	FEDERAL AID PROJECT NO		SHEET NO
6	NH-2002 (79)		803
STATE	STATE DIST		COUNTY
TEXAS	LAREDO		WEBB
CONT	SECT	JOB	HIGHWAY NO
0018	05	062, ETC	IH 35

REF FILE(S): j011op01.bdr, bdr LV ON = 50,57,58,60-62

b21sdp01.dgn-02 HOUFILE023 \hcivil\cf0130\ 2/10/2005

REF FILE(S): J01LOP01.BDR, BDR LV ON = 47,57,58,60-62

SUMMARY OF SMALL SIGNS

SM RD SGN ASSM TY XXXXX(X)XX(X-XXXX)

Post Type: FRP = Fiberglass; TWT = Thin-Wall; 10BWG = 10 BWG; S80 = Sch 80

Anchor Type: UA = Univer-Conc; UB = Univer-Bolt; WA = Wedge-Conc; SA = Slip-Conc; SB = Slip-Bolt

Mounting Designation: P = Prefab. "Plain"; T = Prefab. "T"; U = Prefab. "U"

1EXT or 2EXT = # of Ext.; BM = Extruded Wind Beam; WC = 1.12 #/ft Wing Chan.; EXAL = Extruded Alum. signs

PLAN LAYOUT SHEET NO	SIGN NO	SIGN TYPE	SIGN TEXT	SIGN DIMENSIONS (in)	REFLECTIVE SHEETING	PLYWOOD TYPE A	ALUMINUM TYPE A	ALUMINUM TYPE G	Post Type	Posts (1 or 2)	Anchor Type	Mounting Designation			432 RIPRAP (529) CY
CSJ: 0018-06-147															
6	3	M3-3B	SOUTH	24x12	C		✓		S80	1	SA	U			0.09
		M1-1A2	INTERSTATE 35	24x24	C		✓								
		M5-1B	←	21x15	C		✓								
		M3-3	SOUTH	24x12	C		✓								
		M1-4A2	83	24x24	C		✓								
		M5-1	←	21x15	C		✓								
	4	SW19-2	WATCH FOR ICE ON BRIDGE	48x48	C		✓		10BWG	1	SA	T			0.09
			SUBTOTAL												0.18
CSJ: 0018-06-148															
6	2	FR11-1	KEEP OFF MEDIAN	48x60	C		✓		S80	1	SA	T			0.09
	5	FR11-1	KEEP OFF MEDIAN	48x60	C		✓		S80	1	SA	T			0.09
	6	W3-1a		36x36	C		✓		TWT	1	UA	P			0.07
	7	W3-1a		36x36	C		✓		TWT	1	UA	P			0.07
7	1	FW4-2L		48x48	C		✓		10BWG	1	SA	T			0.09
	2	R2-1	SPEED LIMIT 50	24x30	C		✓		TWT	1	UA	P		BRIDGE MOUNTED	
	3	M3-3B	SOUTH	24x12	C		✓		S80	1	SA	U	2 EXT	BRIDGE MOUNTED	
		M1-1A2	INTERSTATE 35	24x24	C		✓								
		M6-1B	←	21x15	C		✓								
		M3-3	SOUTH	24x12	C		✓								
		M1-4A2	83	24x24	C		✓								
		M6-1	←	21x15	C		✓								
	4	FW1-9L	←	144x36	C		✓		S80	2	SA	P		BRIDGE MOUNTED	
	5	R6-1L	ONE WAY	36x12	C		✓		TWT	1	UA	P		BRIDGE MOUNTED	
		R1-1	STOP	30x30	C		✓								
	6	R3-8	ONLY ONLY ONLY	48x30	C		✓		TWT	1	UA	T		BRIDGE MOUNTED	
		(SPL)													
		R5-1a	WRONG WAY	36x24	C		✓								
	7	R3-7L	LEFT LANE MUST TURN LEFT	30x30	C		✓		TWT	1	UA	T		BRIDGE MOUNTED	
		PLAQUE	500 FT	30x8	C		✓								
	8	M3-3B	SOUTH	24x12	C		✓		S80	1	SA	U	2 EXT	BRIDGE MOUNTED	
		M1-1A2	INTERSTATE 35	24x24	C		✓								
		M6-1B	←	21x15	C		✓								
		M3-3	SOUTH	24x12	C		✓								
		M1-4A2	83	24x24	C		✓								
		M6-1	←	21x15	C		✓								
		M3-1B	NORTH	24x12	C		✓								
		M1-1A2	INTERSTATE 35	24x24	C		✓								
		M6-3B	↑	21x15	C		✓								
		M3-1	NORTH	24x12	C		✓								
		M1-4A2	83	24x24	C		✓								
		M6-3	↑	21x15	C		✓								
	9	R5-1	DO NOT ENTER	30x30	C		✓		TWT	1	UA	T		BRIDGE MOUNTED	
		R1-1	STOP	30x30	C		✓								
	10	R5-1	DO NOT ENTER	30x30	C		✓		TWT	1	UA	T		BRIDGE MOUNTED	
		R1-1	STOP	30x30	C		✓								
	11	FW1-9L	←	144x36	C		✓		S80	2	SA	P		BRIDGE MOUNTED	
	12	W12-3	XXFT XXIN	84x24	C		✓		PAID UNDER ITEM 444-505 BRIDGE PROTECTIVE ASSEMBLY (SIGN & BRACKET) (BPA-1)						
	13	M3-1B	NORTH	24x12	C		✓		S80	1	SA	U		BRIDGE MOUNTED	
		M1-1A2	INTERSTATE 35	24x24	C		✓								
		M6-1B	←	21x15	C		✓								
		M3-1	NORTH	24x12	C		✓								
		M1-4A2	83	24x24	C		✓								
		M6-1	←	21x15	C		✓								
	14	R3-8	ONLY ONLY ONLY	48x30	C		✓		TWT	1	UA	T		BRIDGE MOUNTED	
		(SPL)													
		R5-1a	WRONG WAY	36x24	C		✓								
	15	W12-3	XXFT XXIN	84x24	C		✓		PAID UNDER ITEM 444-505 BRIDGE PROTECTIVE ASSEMBLY (SIGN & BRACKET) (BPA-1)						

ALUMINUM SIGN BLANKS (TYPE A)

SQUARE FEET	MIN THICKNESS
LESS THAN 7.5	0.080"
7.5 TO 15	0.100"
GREATER THAN 15	0.125"

SIGN SUPPORTS ~~SHALL BE~~ LOCATED AS SHOWN ON THE PLANS, EXCEPT THAT THE ENGINEER MAY SHIFT THE SIGN SUPPORTS WITHIN DESIGN GUIDELINES, WHERE NECESSARY TO SECURE A MORE DESIRABLE LOCATION OR TO AVOID CONFLICT WITH UTILITIES, UNLESS OTHERWISE SHOWN ON THE PLANS. THE CONTRACTOR ~~SHALL~~ STAKE AND THE ENGINEER WILL VERIFY ALL SIGN SUPPORT LOCATIONS

REFLECTIVE SHEETING ~~WILL BE~~ DESIGNATED AS:

TYPE C - HIGH SPECIFIC INTENSITY
TYPE D - NON-FLOURESCENT PRISMATIC

THE SEAL APPEARING ON THIS DOCUMENT WAS AUTHORIZED BY SIDNEY S. AFONSO P.E. 88055 ON JUNE 04, 2003

KBR
Engineered by KBR Technical Services, Inc

©2003 Texas Department of Transportation

SUMMARY OF SMALL SIGNS

SHEET 1 OF 8

IH 35
LOOP 20 TO UNIROYAL ROAD

FED. RD. DIV. NO.	FEDERAL AID PROJECT NO.	SHEET NO.
6	NH-2002 (79)	804

STATE	STATE DIST	COUNTY
TEXAS	LAREDO	WEBB

CONT	SECT	JOB	HIGHWAY NO.
0018	05	0062, ETC	IH 35

REF FILE(S): J01LOP01.BDR, BDR LV ON = 47,57,58,60-62

SUMMARY OF SMALL SIGNS

SM RD SGN ASSM TY XXXXX(X)XX(X-XXXX)

Post Type: FRP = Fiberglass; TWT = Thin-Wall; 10BWG = 10 BWG; S80 = Sch 80

Anchor Type: UA = Univer-Conc; UB = Univer-Bolt; WA = Wedge-Conc; SA = Slip-Conc; SB = Slip-Bolt

Mounting Designation: P = Prefab. "Plain"; T = Prefab. "T"; U = Prefab. "U"

1EXT or 2EXT = # of Ext.; BM = Extruded Wind Beam; WC = 1.12 #/ft Wing Chan.; EXAL = Extruded Alum. signs

PLAN LAYOUT SHEET NO	SIGN NO	SIGN TYPE	SIGN TEXT	SIGN DIMENSIONS (in)	REFLECTIVE SHEETING	PLYWOOD TYPE A	ALUMINUM TYPE A	ALUMINUM TYPE G	Post Type	Posts (1 or 2)	Anchor Type	Mounting Designation			432 RIPRAP (529) CY
7	16	R6-1L	ONE WAY	36x12	C		✓		TWT	1	UA	P		BRIDGE MOUNTED	
		R1-1	STOP	30x30	C		✓								
8	1	R5-1	DO NOT ENTER	30x30	C		✓		TWT	1	UA	P		BRIDGE MOUNTED	
		R1-1	STOP	30x30	C		✓								
	2	R5-1	DO NOT ENTER	30x30	C		✓		TWT	1	UA	P		BRIDGE MOUNTED	
		R1-1	STOP	30x30	C		✓								
	3	M3-1B	NORTH	24X12	C		✓		S80	1	SA	U	2 EXT	BRIDGE MOUNTED	
		M1-1A2	INTERSTATE 35	24X24	C		✓								
		M6-1B	←	21X15	C		✓								
		M3-1	NORTH	24X12	C		✓								
		M1-4A2	83	24X24	C		✓								
		M6-1	←	21X15	C		✓								
		M3-3B	SOUTH	24x12	C		✓								
		M1-1A2	INTERSTATE 35	24x24	C		✓								
		M6-3B	↑	21x15	C		✓								
		M3-3	SOUTH	24x12	C		✓								
		M1-4A2	83	24x24	C		✓								
		M6-3	↑	21x15	C		✓								
	4	R3-8	ONLY ONLY ONLY	48x30	C		✓		TWT	1	UA	T		BRIDGE MOUNTED	
		(SPL)													
		R5-1a	WRONG WAY	36x24	C		✓								
	5	R3-8	ONLY ONLY ONLY	48x30	C		✓		TWT	1	UA	T		BRIDGE MOUNTED	
		(SPL)													
		R5-1a	WRONG WAY	36x24	C		✓								
	6	R3-7L	LEFT LANE MUST TURN LEFT	30x30	C		✓		TWT	1	UA	T		BRIDGE MOUNTED	
		PLAQUE	500 FT	30x8	C		✓								
	7	FR2-1	SPEED LIMIT 70	48X60	C		✓		S80	2	SA	P			0.18
		FR2-3	NIGHT 65	48X48	C		✓								
	8	FR2-1	SPEED LIMIT 70	48X60	C		✓		S80	2	SA	P			0.18
		FR2-3	NIGHT 65	48X48	C		✓								
	10	D10-4	MILE 9	12X24	C		✓		TWT	1	WA	P			0.07
	11	W3-1a	♁	36x36	C		✓		TWT	1	UA	P			0.07
	12	W3-1a	♁	36x36	C		✓		TWT	1	UA	P			0.07
	13	R6-1R	ONE WAY	36x12	C		✓		TWT	1	UA	P			0.07
	14	R2-1	SPEED LIMIT 50	24x30	C		✓		TWT	1	UA	P			0.07
	15	R3-20	LEFT LANE MUST ENTER RAMP	48x48	C		✓		10BWG	1	SA	T			0.09
	17	D10-4	MILE 9	12X24	C		✓		TWT	1	WA	P			0.07
	18	D9-2	H	24x24	C		✓		TWT	1	UA	P		BRIDGE MOUNTED	
		M6-3B	↑	21x15	C		✓								
	19	FW9-1L	LEFT LANE ENDS	48x48	C		✓		10BWG	1	SA	T		BRIDGE MOUNTED	
			SUBTOTAL												1.28
CSJ: 0018-06-147															
9	1	R5-1	DO NOT ENTER	30x30	C		✓		TWT	1	UA	P			0.07
		D9-2	H	24x24	C		✓								
		M6-3B	↑	21x15	C		✓								
	2	R5-1	DO NOT ENTER	30x30	C		✓		S80	1	SA	T			0.09
		SW19-2	WATCH FOR ICE ON BRIDGE	48x48	C		✓								
	4	M3-1B	NORTH	24x12	C		✓		S80	1	SA	U			0.09
		M1-1A2	INTERSTATE 35	24x24	C		✓								
		M5-2BL	↰	21x15	C		✓								
		M3-1	NORTH	24x12	C		✓								
		M1-4A2	83	24x24	C		✓								
		M5-2L	↰	21x15	C		✓								
	5	FW4-1R	↱	48x48	C		✓		10BWG	1	SA	T			0.09

ALUMINUM SIGN BLANKS (TYPE A)

SQUARE FEET	MIN THICKNESS
LESS THAN 7.5	0.080"
7.5 TO 15	0.100"
GREATER THAN 15	0.125"

SIGN SUPPORTS SHALL BE LOCATED AS SHOWN ON THE PLANS. EXCEPT THAT THE ENGINEER MAY SHIFT THE SIGN SUPPORTS, WITHIN DESIGN GUIDELINES, WHERE NECESSARY TO SECURE A MORE DESIRABLE LOCATION OR TO AVOID CONFLICT WITH UTILITIES. UNLESS OTHERWISE SHOWN ON THE PLANS, THE CONTRACTOR SHALL STAKE AND THE ENGINEER WILL VERIFY ALL SIGN SUPPORT LOCATIONS

REFLECTIVE SHEETING WILL BE DESIGNATED AS:

TYPE C - HIGH SPECIFIC INTENSITY
TYPE D - NON-FLOURESCENT PRISMATIC

STATE OF TEXAS
SIDNEY S. AFONSO
P.E. 88055
REGISTERED PROFESSIONAL ENGINEER

THE SEAL APPEARING ON THIS DOCUMENT WAS AUTHORIZED BY SIDNEY S. AFONSO PE 88055, ON JUNE 04, 2003

KBR
Engineered by KBR Technical Services, Inc

©2003 Texas Department of Transportation

IH 35
LOOP 20 TO UNIROYAL ROAD

SUMMARY OF SMALL SIGNS

SHEET 2 OF 8

FED RD DIV NO	FEDERAL AID PROJECT NO	SHEET NO
6	NH-2002 (79)	805

STATE	STATE DIST	COUNTY
TEXAS	LAREDO	WEBB

CONT	SECT	JOB	HIGHWAY NO
0018	05	062, ETC	IH 35

REF FILE(S): J01LOP01.BDR, BDR LV ON = 47,57,58,60-62

SUMMARY OF SMALL SIGNS

SM RD SGN ASSM TY XXXXX(X)XX(X-XXXX)

Post Type: FRP = Fiberglass; TWT = Thin-Wall; 10BWG = 10 BWG; S80 = Sch 80

Anchor Type: UA = Univer-Conc; UB = Univer-Bolt; WA = Wedge-Conc; SA = Slip-Conc; SB = Slip-Bolt

Mounting Designation: P = Prefab. "Plain"; T = Prefab. "T"; U = Prefab. "U"; 1EXT or 2EXT = # of Ext.; BM = Extruded Wind Beam; WC = 1.12 #/ft Wing Chan.; EXAL = Extruded Alum. signs

PLAN LAYOUT SHEET NO	SIGN NO	SIGN TYPE	SIGN TEXT	SIGN DIMENSIONS (in)	REFLECTIVE SHEETING	PLYWOOD TYPE A	ALUMINUM TYPE A	ALUMINUM TYPE G	Post Type	Posts (1 or 2)	Anchor Type	Mounting Designation			432 RIPRAP (529) CY
9	6	M3-1B	NORTH	24x12	C		✓		S80	1	SA	U			0.09
		M1-1A2	INTERSTATE 35	24x24	C		✓								
		M6-2BL	↖	21x15	C		✓								
		M3-1	NORTH	24x12	C		✓								
		M1-4A2	83	24x24	C		✓								
		M6-2L	↖	21x15	C		✓								
		OM-1R	◈	18x18	C		✓								
	7	R5-1A	WRONG WAY	36x24	C		✓		TWT	1	UA	P			0.07
	8	R5-1A	WRONG WAY	36x24	C		✓		TWT	1	UA	P			0.07
11	1	R2-1	SPEED LIMIT 50	24x30	C		✓		TWT	1	UA	P			0.09
12	1	M3-1B	NORTH	24x12	C		✓		S80	1	SA	U			0.09
		M1-1A2	INTERSTATE 35	24x24	C		✓								
		M3-1	NORTH	24x12	C		✓								
		M1-4A2	83	24x24	C		✓								
	2	W13-2	EXIT 50 MPH	48x60	C		✓		S80	1	SA	T			0.09
13	1	FR2-1	SPEED LIMIT 70	48x60	C		✓		S80	2	SA	P			0.18
		FR2-3	NIGHT 65	48x48	C		✓								
	2	FR2-1	SPEED LIMIT 70	48x60	C		✓		S80	2	SA	P			0.18
		FR2-3	NIGHT 65	48x48	C		✓								
	3	W4-2R	⫼	36x36	C		✓		TWT	1	UA	P			0.07
	4	W4-2R	⫼	36x36	C		✓		TWT	1	UA	P			0.07
	5	R6-1R	ONE WAY	36x12	C		✓		TWT	1	UA	P			0.07
	6	D10-5	MILE 10	12X36	C		✓		TWT	1	WA	P			0.07
	7	R6-1R	ONE WAY	36x12	C		✓		TWT	1	UA	P			0.07
14	1	D10-5	MILE 10	12X36	C		✓		TWT	1	WA	P			0.07
	2	D10-5	MILE 10	12X36	C		✓		TWT	1	WA	P			0.07
15	1	R6-1R	ONE WAY	36x12	C		✓		TWT	1	UA	P			0.07
	2	W1-2R	↱	30x30	C		✓		TWT	1	UA	P			0.07
	3	R2-1	SPEED LIMIT 50	24x30	C		✓		TWT	1	UA	P			0.07
16	1	M3-3B	SOUTH	24x12	C		✓		S80	1	SA	U			0.09
		M1-1A2	INTERSTATE 35	24x24	C		✓								
		M3-3	SOUTH	24x12	C		✓								
		M1-4A2	83	24x24	C		✓								
17	1	R2-1	SPEED LIMIT 50	24x30	C		✓		TWT	1	UA	P			0.07
18	1	FR2-1	SPEED LIMIT 70	48x60	C		✓		S80	2	SA	P			0.18
		FR2-3	NIGHT 65	48x48	C		✓								
	2	FR2-1	SPEED LIMIT 70	48x60	C		✓		S80	2	SA	P			0.18
		FR2-3	NIGHT 65	48x48	C		✓								
19	1	FR11-1	KEEP OFF MEDIAN	48x60	C		✓		S80	1	SA	T			0.09
	2	D10-5	MILE 11	12X36	C		✓		TWT	1	WA	P			0.07
	3	FR11-1	KEEP OFF MEDIAN	48x60	C		✓		S80	1	SA	T			0.09
	4	W4-2L	⫽	36x36	C		✓		TWT	1	UA	P			0.07
	5	W4-2L	⫽	36x36	C		✓		TWT	1	UA	P			0.07
	6	D10-5	MILE 11	12X36	C		✓		TWT	1	WA	P			0.07
20	1	R6-1R	ONE WAY	36x12	C		✓		TWT	1	UA	P			0.07
	2	R6-1R	ONE WAY	36x12	C		✓		TWT	1	UA	P			0.07
	3	W4-3L	⫛	36x36	C		✓		10BWG	1	SA	T			0.09
		R5-1a	WRONG WAY	36x24	C		✓								
	4	R5-1a	WRONG WAY	36x24	C		✓		TWT	1	UA	P			0.07
	5	R4-3b	DO NOT CROSS DOUBLE WHITE LINE	36x36	C		✓		10BWG	1	SA	T			0.09
		R5-1	DO NOT ENTER	30x30	C		✓								
	6	R4-3b	DO NOT CROSS DOUBLE WHITE LINE	36x36	C		✓		10BWG	1	SA	T			0.09
		R5-1	DO NOT ENTER	30x30	C		✓								

ALUMINUM SIGN BLANKS (TYPE A)

SQUARE FEET	MIN THICKNESS
LESS THAN 7.5	0.080"
7.5 TO 15	0.100"
GREATER THAN 15	0.125"

SIGN SUPPORTS ~~SHALL BE~~ LOCATED AS SHOWN ON THE PLANS. EXCEPT THAT THE ENGINEER MAY SHIFT THE SIGN SUPPORTS, WITHIN DESIGN GUIDELINES, WHERE NECESSARY TO SECURE A MORE DESIRABLE LOCATION OR TO AVOID CONFLICT WITH UTILITIES, UNLESS OTHERWISE SHOWN ON THE PLANS. THE CONTRACTOR ~~SHALL~~ STAKE AND THE ENGINEER WILL VERIFY ALL SIGN SUPPORT LOCATIONS

REFLECTIVE SHEETING ~~WILL BE~~ DESIGNATED AS:

TYPE C - HIGH SPECIFIC INTENSITY
TYPE D - NON-FLOURESCENT PRISMATIC

KBR
Engineered by KBR Technical Services, Inc

THE SEAL APPEARING ON THIS DOCUMENT WAS AUTHORIZED BY SIDNEY S. ALFONSO P.E. 88055, ON JUNE 04, 2003

STATE OF TEXAS
SIDNEY S. ALFONSO
88055
LICENSED PROFESSIONAL ENGINEER

©2003 Texas Department of Transportation

SUMMARY OF SMALL SIGNS
IH 35
LOOP 20 TO UNIROYAL ROAD

SHEET 3 OF 8

FED RD DIV NO	FEDERAL AID PROJECT NO	SHEET NO
6	NH-2002 (79)	806

STATE	STATE DIST	COUNTY
TEXAS	LAREDO	WEBB

CONT	SECT	JOB	HIGHWAY NO
0018	05	062+ ETC	IH 35

REF FILE(S): J01LOP01.BDR, BDR LV ON = 47,57,58,60-62

SUMMARY OF SMALL SIGNS

SM RD SGN ASSM TY XXXXX(X)XX(X-XXXX)

PLAN LAYOUT SHEET NO	SIGN NO	SIGN TYPE	SIGN TEXT	SIGN DIMENSIONS (in)	REFLECTIVE SHEETING	PLYWOOD TYPE A	ALUMINUM TYPE A	ALUMINUM TYPE G	Post Type (FRP • Fiberglass, TWT • Thin-Wall, 10BWG • 10 BWG, S80 • Sch 80)	Posts (1 or 2)	Anchor Type (UA • Univer-Conc, UB • Univer-Bolt, WA • Wedge-Conc, SA • Slip-Conc, SB • Slip-Bolt)	Mounting Designation: P • Prefab. "Plain", T • Prefab. "T", U • Prefab. "U"	Mounting Designation: 1EXT or 2EXT • # of Ext. BM • Extruded Wind Beam, WC • 1.12 #/ft Wing Chan., EXAL • Extruded Alum. signs		432 RIPRAP (529) CY
20	7	R4-3b	DO NOT CROSS DOUBLE WHITE LINE	36x36	C		✓		10BWG	1	SA	T			0.09
		R5-1	DO NOT ENTER	30x30	C		✓								
	8	D42	SUPERIOR PUBLIC WATER SYSTEM	36x24	C		✓		TWT	1	UA	T			0.07
			THE STATE OF TEXAS												
21	1	R12-1T	WEIGHT LIMIT GROSS 58420 LBS	24x36	C		✓		TWT	1	UA	P			0.07
	2	R2-1	SPEED LIMIT 50	24x30	C		✓		TWT	1	UA	P			0.07
			SUBTOTAL												3.66
CSJ: 0018-05-062															
22	1	R2-1	SPEED LIMIT 50	24x30	C		✓		TWT	1	UA	P			0.07
24	1	D10-5	MILE 12	12x36	C		✓		TWT	1	WA	P			0.07
	2	FR11-1	KEEP OFF MEDIAN	48x60	C		✓		S80	1	SA	T			0.09
	4	D10-5	MILE 12	12x36	C		✓		TWT	1	WA	P			0.07
	5	FR11-1	KEEP OFF MEDIAN	48x60	C		✓		S80	1	SA	T			0.09
25	1	W10-3		30x30	C		✓		TWT	1	UA	P			0.07
	2	W4-2L		36x36	C		✓		10BWG	1	SA	T			0.09
		R5-1	DO NOT ENTER	30x30	C		✓								
	3	W4-2L		36x36	C		✓		10BWG	1	SA	T			0.09
		R5-1	DO NOT ENTER	30x30	C		✓								
	4	R6-1R	ONE WAY	36x12	C		✓		TWT	1	UA	P			0.07
	5	M3-1B	NORTH	24x12	C		✓		S80	1	SA	U			0.09
		M1-1A2	INTERSTATE 35	24x24	C		✓								
		M6-1BL	→	21x15	C		✓								
		M3-1	NORTH	24x12	C		✓								
		M1-4A2	83	24x24	C		✓								
		M6-1	→	21x15	C		✓								
	6	W13-2	EXIT 50 MPH	48x60	C		✓		S80	1	SA	T			0.09
	7	R2-1	SPEED LIMIT 50	24x30	C		✓		TWT	1	UA	P			0.07
	8	R5-1A	WRONG WAY	36x24	C		✓		TWT	1	UA	P			0.07
	9	R5-1A	WRONG WAY	36x24	C		✓		TWT	1	UA	P			0.07
26	1	M3-3B	SOUTH	24x12	C		✓		S80	1	SA	U			0.09
		M1-1A2	INTERSTATE 35	24x24	C		✓								
		M6-2BL	↖	21x15	C		✓								
		M3-3	SOUTH	24x12	C		✓								
		M1-4A2	83	24x24	C		✓								
		M6-2L	↖	21x15	C		✓								
		OM-1R		18x18	C		✓								
	2	FW4-1R		48x48	C		✓		10BWG	1	SA	T			0.09
	3	M3-3B	SOUTH	24x12	C		✓		S80	1	SA	U			0.09
		M1-1A2	INTERSTATE 35	24x24	C		✓								
		M5-2BL	↰	21x15	C		✓								
		M3-3	SOUTH	24x12	C		✓								
		M1-4A2	83	24x24	C		✓								
		M5-2L	↰	21x15	C		✓								
	4	W4-3L		36x36	C		✓		10BWG	1	SA	T			0.09
		R5-1a	WRONG WAY	36x24	C		✓								
	5	R5-1a	WRONG WAY	36x24	C		✓		TWT	1	UA	P			0.07
	6	R4-3b	DO NOT CROSS DOUBLE WHITE LINE	36x36	C		✓		10BWG	1	SA	T			0.09
		R5-1	DO NOT ENTER	30x30	C		✓								
	7	R4-3b	DO NOT CROSS DOUBLE WHITE LINE	36x36	C		✓		10BWG	1	SA	T			0.09
		R5-1	DO NOT ENTER	30x30	C		✓								
	8	R4-3b	DO NOT CROSS DOUBLE WHITE LINE	36x36	C		✓		10BWG	1	SA	T			0.09
		R5-1	DO NOT ENTER	30x30	C		✓								
27	1	R2-1	SPEED LIMIT 50	24x30	C		✓		TWT	1	UA	P			0.07
	2	SW19-2	WATCH FOR ICE ON BRIDGE	48x48	C		✓		10BWG	1	SA	T			0.09
	3	W3-3		36x36	C		✓		TWT	1	UA	P			0.07

ALUMINUM SIGN BLANKS (TYPE A)

SQUARE FEET	MIN THICKNESS
LESS THAN 7.5	0.080"
7.5 TO 15	0.100"
GREATER THAN 15	0.125"

SIGN SUPPORTS ~~SHALL BE~~ LOCATED AS SHOWN ON THE PLANS. EXCEPT THAT THE ENGINEER MAY SHIFT THE SIGN SUPPORTS WITHIN DESIGN GUIDELINES. WHERE NECESSARY TO SECURE A MORE DESIRABLE LOCATION OR TO AVOID CONFLICT WITH UTILITIES, UNLESS OTHERWISE SHOWN ON THE PLANS. THE CONTRACTOR ~~SHALL~~ STAKE AND THE ENGINEER WILL VERIFY ALL SIGN SUPPORT LOCATIONS

REFLECTIVE SHEETING ~~WILL BE~~ DESIGNATED AS:

TYPE C - HIGH SPECIFIC INTENSITY
TYPE D - NON-FLOURESCENT PRISMATIC

STATE OF TEXAS
SIDNEY S. ALFONSO
JOB P. 88055
STEPHEN L. SEIDEL
LICENSED PROFESSIONAL ENGINEER

THE SEAL APPEARING ON THIS DOCUMENT WAS AUTHORIZED BY SIDNEY S. ALFONSO P.E. 88055 ON JUNE 04, 2003

KBR
Engineered by KBR Technical Services, Inc

©2003 Texas Department of Transportation

SUMMARY OF SMALL SIGNS
IH 35
LOOP 20 TO UNIROYAL ROAD

SHEET 4 OF 8

FED. RD. DIV. NO.	FEDERAL AID PROJECT NO.	SHEET NO.
6	NH-2002 (79)	807

STATE	STATE DIST	COUNTY
TEXAS	LAREDO	WEBB

CONT.	SECT.	JOB	HIGHWAY NO.
0018	05	1062, ETC	IH 35

REF FILE(S): J01LOP01.BDR, BDR LV ON = 47,57,58,60-62

SUMMARY OF SMALL SIGNS

SM RD SGN ASSM TY XXXXX(X)XX(X-XXXX)

Post Type: FRP = Fiberglass; TWT = Thin-Wall; 10BWG = 10 BWG; S80 = Sch 80

Posts (1 or 2)

Anchor Type: UA = Univer-Conc; UB = Univer-Bolt; WA = Wedge-Conc; SA = Slip-Conc; SB = Slip-Bolt

Mounting Designation: P = Prefab. "Plain"; T = Prefab. "T"; U = Prefab. "U"

1EXT or 2EXT = # of Ext.; BM = Extruded Wind Beam; WC = 1.12 #/ft Wing Chan.; EXAL = Extruded Alum. signs

PLAN LAYOUT SHEET NO	SIGN NO	SIGN TYPE	SIGN TEXT	SIGN DIMENSIONS (in)	REFLECTIVE SHEETING	PLYWOOD TYPE A	ALUMINUM TYPE A	ALUMINUM TYPE G	Post Type	Posts	Anchor Type	Mounting Designation			432 RIPRAP (529) CY
27	4	M3-3B	SOUTH	24x12	C		✓		S80	1	SA	U			0.09
		M1-1A2	INTERSTATE 35	24x24	C		✓								
		M5-1BL	↰	21x15	C		✓								
		M3-3	SOUTH	24x12	C		✓								
		M1-4A2	83	24x24	C		✓								
		M5-1L	↰	21x15	C		✓								
			SUBTOTAL												2.12
CSJ: 0018-05-063															
28	1	FR4-3	SLOWER TRAFFIC KEEP RIGHT	48x60	C		✓		S80	1	SA	T			0.09
	2	W12-3	XXFT XXIN	84x24	C		✓		PAID UNDER ITEM 444-505 BRIDGE PROTECTIVE ASSEMBLY (SIGN & BRACKET) (BPA-1)						
	3	FR2-1	SPEED LIMIT 70	48X60	C		✓		S80	2	SA	P			0.18
		FR2-3	NIGHT 65	48X48	C		✓								
	4	FR2-1	SPEED LIMIT 70	48X60	C		✓		S80	2	SA	P			0.18
		FR2-3	NIGHT 65	48X48	C		✓								
	5	R5-1	DO NOT ENTER	30x30	C		✓		TWT	1	UA	P		BRIDGE MOUNTED	
	6	R5-1	DO NOT ENTER	30x30	C		✓		TWT	1	UA	P		BRIDGE MOUNTED	
	7	M3-1B	NORTH	24X12	C		✓		S80	1	SA	U	2 EXT	BRIDGE MOUNTED	
		M1-1A2	INTERSTATE 35	24X24	C		✓								
		M6-1B	←	21X15	C		✓								
		M3-1	NORTH	24X12	C		✓								
		M1-4A2	83	24X24	C		✓								
		M6-1	←	21X15	C		✓								
		M3-3B	SOUTH	24x12	C		✓								
		M1-1A2	INTERSTATE 35	24x24	C		✓								
		M6-3B	↑	21x15	C		✓								
		M3-3	SOUTH	24x12	C		✓								
		M1-4A2	83	24x24	C		✓								
		M6-3	↑	21x15	C		✓								
	8	R3-8	ONLY ONLY ONLY	48x30	C		✓		TWT	1	UA	T		BRIDGE MOUNTED	
		(SPL)													
	9	R3-8	ONLY ONLY ONLY	48x30	C		✓		TWT	1	UA	T		BRIDGE MOUNTED	
		(SPL)													
	10	R3-7L	LEFT LANE MUST TURN LEFT	30x30	C		✓		TWT	1	UA	P		BRIDGE MOUNTED	
		PLAQUE	500 FT	30x8	C		✓								
	11	R3-7L	LEFT LANE MUST TURN LEFT	30x30	C		✓		TWT	1	UA	P			0.07
		PLAQUE	500 FT	30x8	C		✓								
	12	M3-3B	SOUTH	24X12	C		✓		S80	1	SA	U	2 EXT		0.09
		M1-1A2	INTERSTATE 35	24X24	C		✓								
		M6-1B	←	21X15	C		✓								
		M3-3	SOUTH	24X12	C		✓								
		M1-4A2	83	24X24	C		✓								
		M6-1	←	21X15	C		✓								
		M3-1B	NORTH	24x12	C		✓								
		M1-1A2	INTERSTATE 35	24x24	C		✓								
		M6-3B	↑	21x15	C		✓								
		M3-1	NORTH	24x12	C		✓								
		M1-4A2	83	24x24	C		✓								
		M6-3	↑	21x15	C		✓								
	13	R3-8	ONLY ONLY	48x30	C		✓		TWT	1	UA	T		BRIDGE MOUNTED	
		(SPL)													
	14	W12-3	XXFT XXIN	84x24	C	✓			PAID UNDER ITEM 444-505 BRIDGE PROTECTIVE ASSEMBLY (SIGN & BRACKET) (BPA-1)						
	15	R5-1	DO NOT ENTER	30x30	C		✓		TWT	1	UA	P		BRIDGE MOUNTED	
	16	R5-1	DO NOT ENTER	30x30	C		✓		TWT	1	UA	P		BRIDGE MOUNTED	
	17	M3-1B	NORTH	24x12	C		✓		S80	1	SA	U		BRIDGE MOUNTED	
		M1-1A2	INTERSTATE 35	24x24	C		✓								
		M6-1B	←	21x15	C		✓								
		M3-1	NORTH	24x12	C		✓								
		M1-4A2	83	24x24	C		✓								
		M6-1	←	21x15	C		✓								
	18	R6-1R	ONE WAY	36x12	C		✓		TWT	1	UA	P		BRIDGE MOUNTED	

ALUMINUM SIGN BLANKS (TYPE A)

SQUARE FEET	MIN THICKNESS
LESS THAN 7.5	0.080"
7.5 TO 15	0.100"
GREATER THAN 15	0.125"

SIGN SUPPORTS ~~SHALL BE~~ LOCATED AS SHOWN ON THE PLANS. EXCEPT THAT THE ENGINEER MAY SHIFT THE SIGN SUPPORTS, WITHIN DESIGN GUIDELINES, WHERE NECESSARY TO SECURE A MORE DESIRABLE LOCATION OR TO AVOID CONFLICT WITH UTILITIES. UNLESS OTHERWISE SHOWN ON THE PLANS, THE CONTRACTOR ~~SHALL~~ STAKE AND THE ENGINEER WILL VERIFY ALL SIGN SUPPORT LOCATIONS

REFLECTIVE SHEETING ~~WILL BE~~ DESIGNATED AS:

TYPE C - HIGH SPECIFIC INTENSITY
TYPE D - NON-FLOURESCENT PRISMATIC

THE SEAL APPEARING ON THIS DOCUMENT WAS AUTHORIZED BY SIDNEY S. AFONSO PE 88055, ON JUNE 04, 2003

KBR
Engineered by KBR Technical Services, Inc

©2003 Texas Department of Transportation

IH 35
LOOP 20 TO UNIROYAL ROAD

SUMMARY OF SMALL SIGNS

SHEET 5 OF 8

FED RD DIV NO	FEDERAL AID PROJECT NO	SHEET NO
6	NH-2002 (79)	808

STATE	STATE DIST	COUNTY
TEXAS	LAREDO	WEBB

CONT	SECT	JOB	HIGHWAY NO
0018	05	062, ETC	IH 35

REF FILE(S): J01LOP01.BDR, BDR LV ON = 47,57,58,60-62

SUMMARY OF SMALL SIGNS

SM RD SGN ASSM TY XXXXX(X)XX(X-XXXX)

Post Type: FRP = Fiberglass; TWT = Thin-Wall; 10BWG = 10 BWG; S80 = Sch 80

Anchor Type: UA = Univer-Conc; UB = Univer-Bolt; WA = Wedge-Conc; SA = Slip-Conc; SB = Slip-Bolt

Mounting Designation: P = Prefab. "Plain"; T = Prefab. "T"; U = Prefab. "U"; 1EXT or 2EXT = # of Ext.; BM = Extruded Wind Beam; WC = 1.12 #/ft Wing Chan.; EXAL = Extruded Alum. signs

PLAN LAYOUT SHEET NO	SIGN NO	SIGN TYPE	SIGN TEXT	SIGN DIMENSIONS (in)	REFLECTIVE SHEETING	PLYWOOD TYPE A	ALUMINUM TYPE A	ALUMINUM TYPE G	Post Type	Posts (1 or 2)	Anchor Type	Mounting Designation			432 RIPRAP (529) CY
28	19	M3-3B	SOUTH	24x12	C		✓		S80	1	SA	U	2 EXT		0.09
		M1-1A2	INTERSTATE 35	24x24	C		✓								
		M6-3B	↑	21x15	C		✓								
		M3-3	SOUTH	24x12	C		✓								
		M1-4A2	83	24x24	C		✓								
		M6-3	↑	21x15	C		✓								
		M3-1B	NORTH	24X12	C		✓								
		M1-1A2	INTERSTATE 35	24X24	C		✓								
		M6-1B	→	21X15	C		✓								
		M3-1	NORTH	24X12	C		✓								
		M1-4A2	83	24X24	C		✓								
		M6-1	→	21X15	C		✓								
	20	M3-3B	SOUTH	24x12	C		✓		S80	1	SA	U		BRIDGE MOUNTED	
		M1-1A2	INTERSTATE 35	24x24	C		✓								
		M6-1B	←	21x15	C		✓								
		M3-3	SOUTH	24x12	C		✓								
		M1-4A2	83	24x24	C		✓								
		M6-1	←	21x15	C		✓								
	21	FW1-9L	←/←	144x36	C		✓		S80	2	SA	P		BRIDGE MOUNTED	
	22	R9-3a	NO PEDESTRIAN CROSSING	18x18	C		✓					EXISTING			
	23	R3-8	ONLY ONLY	48x30	C		✓		TWT	1	UA	T		BRIDGE MOUNTED	
		(SPL)													
29	1	R3-7L	LEFT LANE MUST TURN LEFT	30x30	C		✓		TWT	1	UA	P			0.07
		PLAQUE	500 FT	30x8	C		✓								
	2	R3-7L	LEFT LANE MUST TURN LEFT	30x30	C		✓		TWT	1	UA	P			0.07
		PLAQUE	500 FT	30x8	C		✓								
	3	M3-3B	SOUTH	24x12	C		✓		S80	1	SA	U			0.09
		M1-1A2	INTERSTATE 35	24x24	C		✓								
		M3-3	SOUTH	24x12	C		✓								
		M1-4A2	83	24x24	C		✓								
	11	M3-1B	NORTH	24x12	C		✓		S80	1	SA	U			0.09
		M1-1A2	INTERSTATE 35	24x24	C		✓								
		M5-2BL	↖	21x15	C		✓								
		M3-1	NORTH	24x12	C		✓								
		M1-4A2	83	24x24	C		✓								
		M5-2L	↖	21x15	C		✓								
			SUBTOTAL												1.02
CSJ: 0018-05-062															
29	5	SW19-12	WATCH FOR ICE ON BRIDGE	48x48	C		✓		10BWG	1	SA	T			0.09
	6	R5-1	DO NOT ENTER	30x30	C		✓		10BWG	1	SA	T			0.09
		R4-3b	DO NOT CROSS DOUBLE WHITE LINE	36x36	C		✓								
	7	D10-5	MILE 13	12X36	C		✓		TWT	1	WA	P			0.07
	8	W3-3	⊠	36x36	C		✓		TWT	1	UA	P			0.07
	9	R5-1	DO NOT ENTER	30x30	C		✓		10BWG	1	SA	T			0.09
		R4-3b	DO NOT CROSS DOUBLE WHITE LINE	36x36	C		✓								
	10	R4-3b	DO NOT CROSS DOUBLE WHITE LINE	36x36	C		✓		TWT	1	UA	P			0.07
	12	M3-1B	NORTH	24x12	C		✓		S80	1	SA	U			0.09
		M1-1A2	INTERSTATE 35	24x24	C		✓								
		M6-2BL	↖	21x15	C		✓								
		M3-1	NORTH	24x12	C		✓								
		M1-4A2	83	24x24	C		✓								
		M6-2L	↖	21x15	C		✓								
		OM-1R	◆	18x18	C		✓								
	13	FW4-1R	↑	48x48	C		✓		10BWG	1	SA	T			0.09
	14	D10-5	MILE 13	12X36	C		✓		TWT	1	WA	P			0.07

ALUMINUM SIGN BLANKS (TYPE A)

SQUARE FEET	MIN THICKNESS
LESS THAN 7.5	0.080"
7.5 TO 15	0.100"
GREATER THAN 15	0.125"

SIGN SUPPORTS ~~SHALL BE~~ LOCATED AS SHOWN ON THE PLANS EXCEPT THAT THE ENGINEER MAY SHIFT THE SIGN SUPPORTS WITHIN DESIGN GUIDELINES WHERE NECESSARY TO SECURE A MORE DESIRABLE LOCATION OR TO AVOID CONFLICT WITH UTILITIES UNLESS OTHERWISE SHOWN ON THE PLANS. THE CONTRACTOR ~~SHALL~~ STAKE AND THE ENGINEER WILL VERIFY ALL SIGN SUPPORT LOCATIONS

REFLECTIVE SHEETING ~~WILL BE~~ DESIGNATED AS:

TYPE C - HIGH SPECIFIC INTENSITY
TYPE D - NON-FLOURESCENT PRISMATIC

THE SEAL APPEARING ON THIS DOCUMENT WAS AUTHORIZED BY SIDNEY S. AFONSO PE 88055 ON JUNE 04, 2003

KBR
Engineered by KBR Technical Services, Inc

©2003 Texas Department of Transportation

SUMMARY OF SMALL SIGNS
SHEET 6 OF 8
LOOP 20 TO UNIROYAL ROAD
IH 35

FED RD DIV NO	FEDERAL AID PROJECT NO	SHEET NO
6	NH-2002 (79)	809

STATE	STATE DIST	COUNTY
TEXAS	LAREDO	WEBB

CONT	SECT	JOB	HIGHWAY NO
0018	05	062, ETC	IH 35

REF FILE(S): J01LOP01.BDR, BDR LV ON = 47,57,58,60-62

SUMMARY OF SMALL SIGNS

SM RD SGN ASSM TY XXXXX(X)XX(X-XXXX)

Post Type: FRP = Fiberglass; TWT = Thin-Wall; 10BWG = 10 BWG; S80 = Sch 80

Anchor Type: UA = Univer-Conc; UB = Univer-Bolt; WA = Wedge-Conc; SA = Slip-Conc; SB = Slip-Bolt

Mounting Designation: P = Prefab. "Plain"; T = Prefab. "T"; U = Prefab. "U"

1EXT or 2EXT = # of Ext.; BM = Extruded Wind Beam; WC = 1.12 #/ft Wing Chan.; EXAL = Extruded Alum. signs

PLAN LAYOUT SHEET NO	SIGN NO	SIGN TYPE	SIGN TEXT	SIGN DIMENSIONS (in)	REFLECTIVE SHEETING	PLYWOOD TYPE A	ALUMINUM TYPE A	ALUMINUM TYPE G	Post Type	Posts (1 or 2)	Anchor Type	Mounting Designation			432 RIPRAP (529) CY
30	1	W4-3L		36x36	C		✓		TWT	1	UA	P			0.07
	2	R5-1a	WRONG WAY	36x24	C		✓		TWT	1	UA	P			0.07
	3	R5-1a	WRONG WAY	36x24	C		✓		10BWG	1	SA	T			0.09
		W4-3L		36x36	C		✓								
	4	W11-10		36x36	C		✓		TWT	1	UA	P			0.07
	5	FW9-1L	LEFT LANE ENDS	48x48	C		✓		10BWG	1	SA	T			0.09
	6	SW19-2	WATCH FOR ICE ON BRIDGE	48x48	C		✓		10BWG	1	SA	T			0.09
31	1	R2-1	SPEED LIMIT 50	24x30	C		✓		TWT	1	UA	P			0.07
	2	R6-1R	ONE WAY	36x12	C		✓		TWT	1	UA	P			0.07
	3	FW1-10		144x36	C		✓		S80	2	SA	P			0.18
	4	FW4-2L		48x48	C		✓		10BWG	1	SA	T			0.09
	5	W3-3		36x36	C		✓		10BWG	1	SA	P	BM		0.09
		D3-2	UNIROYAL RD	60x12	C		✓								
	6	W3-3		36x36	C		✓		10BWG	1	SA	P	BM		0.09
		D3-2	UNIROYAL RD	60x12	C		✓								
	7	R3-8		30x30	C		✓		TWT	1	UA	P			0.07
		(SPL)													
	8	R3-8		30x30	C		✓		TWT	1	UA	P			0.07
		(SPL)													
	9	W10-2		30x30	C		✓		10BWG	1	SA	T			0.09
		R5-1a	WRONG WAY	36x24	C		✓								
	10	M3-3B	SOUTH	24x12	C		✓		S80	1	SA	U	2 EXT		0.09
		M1-1A2	INTERSTATE 35	24x24	C		✓								
		M6-1B	←	21x15	C		✓								
		M3-3	SOUTH	24x12	C		✓								
		M1-4A2	83	24x24	C		✓								
		M6-1	←	21x15	C		✓								
		M3-1B	NORTH	24X12	C		✓								
		M1-1A2	INTERSTATE 35	24X24	C		✓								
		M6-3B	↑	21x15	C		✓								
		M3-1	NORTH	24X12	C		✓								
		M1-4A2	83	24X24	C		✓								
		M6-3	↑	21x15	C		✓								
	11	R5-1a	WRONG WAY	36x24	C		✓		TWT	1	UA	P			0.07
32	1	R5-1a	WRONG WAY	36x24	C		✓		TWT	1	UA	P			0.07
	2	R5-1a	WRONG WAY	36x24	C		✓		TWT	1	UA	P			0.07
	3	SW19-2	WATCH FOR ICE ON BRIDGE	48x48	C		✓		10BWG	1	SA	T			0.09
	4	M3-3B	SOUTH	24x12	C		✓		S80	1	SA	U			0.09
		M1-1A2	INTERSTATE 35	24x24	C		✓								
		M5-2BL	↖	21x15	C		✓								
		M3-3	SOUTH	24x12	C		✓								
		M1-4A2	83	24x24	C		✓								
		M5-2L	↖	21x15	C		✓								
33	1	FW4-1R	↑	48x48	C		✓		10BWG	1	SA	T			0.09
AT UNIROYAL RD															
1	1	M3-1B	NORTH	24X12	C		✓		S80	1	SA	U	2 EXT		0.09
		M1-1A2	INTERSTATE 35	24X24	C		✓								
		M6-1B	←	21X15	C		✓								
		M3-1	NORTH	24X12	C		✓								
		M1-4A2	83	24X24	C		✓								
		M6-1	←	21X15	C		✓								
		M3-3B	SOUTH	24x12	C		✓								
		M1-1A2	INTERSTATE 35	24x24	C		✓								
		M6-3B	↑	21x15	C		✓								
		M3-3	SOUTH	24x12	C		✓								
		M1-4A2	83	24x24	C		✓								
		M6-3	↑	21x15	C		✓								
	2	W6-3		30x30	C		✓		TWT	1	UA	P			0.07

ALUMINUM SIGN BLANKS (TYPE A)

SQUARE FEET	MIN THICKNESS
LESS THAN 7.5	0.080"
7.5 TO 15	0.100"
GREATER THAN 15	0.125"

SIGN SUPPORTS ~~SHALL BE~~ LOCATED AS SHOWN ON THE PLANS, EXCEPT THAT THE ENGINEER MAY SHIFT THE SIGN SUPPORTS, WITHIN DESIGN GUIDELINES, WHERE NECESSARY TO SECURE A MORE DESIRABLE LOCATION OR TO AVOID CONFLICT WITH UTILITIES, UNLESS OTHERWISE SHOWN ON THE PLANS. THE CONTRACTOR ~~SHALL~~ STAKE AND THE ENGINEER WILL VERIFY ALL SIGN SUPPORT LOCATIONS

REFLECTIVE SHEETING ~~TYPE~~ ~~BE~~ DESIGNATED AS:

TYPE C - HIGH SPECIFIC INTENSITY
TYPE D - NON-FLOURESCENT PRISMATIC

THE SEAL APPEARING ON THIS DOCUMENT WAS AUTHORIZED BY SIDNEY S. AFONSO PE 88055, ON JUNE 04, 2003

KBR
Engineered by KBR Technical Services, Inc

©2003 Texas Department of Transportation

IH 35
LOOP 20 TO UNIROYAL ROAD

SUMMARY OF SMALL SIGNS

SHEET 7 OF 8

FED RD DIV NO	FEDERAL AID PROJECT NO	SHEET NO
6	NH-2002 (79)	210

STATE	STATE DIST	COUNTY	HIGHWAY NO
TEXAS	LAREDO	WEBB	IH 35

CONT	SECT	JOB
0018	05	062, ETC

b21ssp07.dgn-08 HOUFILE023 \hcivil\cf0130\ 6/4/2003

REF FILE(S): J01LOP01.BDR, BDR LV ON = 47,57,58,60-62

SUMMARY OF SMALL SIGNS

SM RD SGN ASSM TY XXXXX(X)XX(X-XXXX)

PLAN LAYOUT SHEET NO	SIGN NO	SIGN TYPE	SIGN TEXT	SIGN DIMENSIONS (in)	REFLECTIVE SHEETING	PLYWOOD TYPE A	ALUMINUM TYPE A	ALUMINUM TYPE G	Post Type (FRP = Fiberglass, TWT = Thin-Wall, 10BWG = 10 BWG, S80 = Sch 80)	Posts (1 or 2)	Anchor Type (UA = Univer-Conc, UB = Univer-Bolt, WA = Wedge-Conc, SA = Slip-Conc, SB = Slip-Bolt)	Mounting Designation: P = Prefab. "Plain", T = Prefab. "T", U = Prefab. "U"	Mounting Designation: 1EXT or 2EXT = # of Ext., BM = Extruded Wind Beam, WC = 1.12 #/ft Wing Chan., EXAL = Extruded Alum. signs		432 RIPRAP (529) CY
UNIROYAL RD CONTINUED															
1	3	M3-3B	SOUTH	24x12	C		✓		S80	1	SA	U			0.09
		M1-1A2	INTERSTATE 35	24x24	C		✓								
		M6-1B	←	21x15	C		✓								
		M3-3	SOUTH	24x12	C		✓								
		M1-4A2	83	24x24	C		✓								
		M6-1	←	21x15	C		✓								
	4	R3-8	ONLY ONLY	30x30	C		✓		TWT	1	UA	P			0.07
		(SPL)													
	5	W12-3	XXFT XXIN	84x24	C		✓		PAID UNDER ITEM 444-505 BRIDGE PROTECTIVE ASSEMBLY (SIGN & BRACKET) (BPA-1)						
	6	W6-3	↕	30x30	C		✓		TWT	1	UA	P			0.07
	7	R3-2		24x24	C		✓		TWT	1	UA	P			0.07
	8	M3-3B	SOUTH	24x12	C		✓		S80	1	SA	U	2 EXT		0.09
		M1-1A2	INTERSTATE 35	24x24	C		✓								
		M6-3B	↑	21x15	C		✓								
		M3-3	SOUTH	24x12	C		✓								
		M1-4A2	83	24x24	C		✓								
		M6-3	↑	21x15	C		✓								
		M3-1B	NORTH	24X12	C		✓								
		M1-1A2	INTERSTATE 35	24X24	C		✓								
		M6-1B	→	21X15	C		✓								
		M3-1	NORTH	24X12	C		✓								
		M1-4A2	83	24X24	C		✓								
		M6-1	→	21X15	C		✓								
	9	W12-3	XXFT XXIN	84x24	C		✓		PAID UNDER ITEM 444-505 BRIDGE PROTECTIVE ASSEMBLY (SIGN & BRACKET) (BPA-1)						
	10	R3-8	ONLY ONLY	30X30	C		✓		TWT	1	WA	P			0.07
		(SPL)													
	11	M3-1B	NORTH	24x12	C		✓		S80	1	SA	U			0.09
		M1-1A2	INTERSTATE 35	24x24	C		✓								
		M6-1B	←	21x15	C		✓								
		M3-1	NORTH	24x12	C		✓								
		M1-4A2	83	24x24	C		✓								
		M6-1	←	21x15	C		✓								
	12	W10-2	‡	30x30	C		✓		TWT	1	WA	P			0.07
	13	R6-1L	ONE WAY	36x12	C		✓		TWT	1	WA	T			0.07
		R6-1R	ONE WAY	36x12	C		✓								
	14	W6-3	↕	30x30	C		✓		10BWG	1	SA	T			0.09
		R5-1	DO NOT ENTER	30x30	C		✓								
	15	W6-3	↕	30x30	C		✓		10BWG	1	SA	T			0.09
		R5-1	DO NOT ENTER	30x30	C		✓								
	16	R9-3a		18x18	C		✓		TWT	1	WA	P			0.07
	17	R3-8	ONLY ONLY	30x30	C		✓		TWT	1	UA	P			0.07
		(SPL)													
			SUBTOTAL												3.77
			PART 1 CSJ: 0018-06-147												0.18
			PART 2 CSJ: 0018-06-147												3.66
			TOTAL												3.84
			CSJ: 0018-06-148												1.28
			PART 1 CSJ 0018-05-062												2.12
			PART 2 CSJ: 0018-05-062												3.77
			TOTAL												5.89
			CSJ: 0018-05-063												1.02
			GRAND TOTAL												12.03

ALUMINUM SIGN BLANKS (TYPE A)

SQUARE FEET	MIN THICKNESS
LESS THAN 7.5	0.080"
7.5 TO 15	0.100"
GREATER THAN 15	0.125"

SIGN SUPPORTS ~~SHALL BE~~ LOCATED AS SHOWN ON THE PLANS, EXCEPT THAT THE ENGINEER MAY SHIFT THE SIGN SUPPORTS WITHIN DESIGN GUIDELINES, WHERE NECESSARY TO SECURE A MORE DESIRABLE LOCATION OR TO AVOID CONFLICT WITH UTILITIES, UNLESS OTHERWISE SHOWN ON THE PLANS. THE CONTRACTOR ~~SHALL~~ STAKE AND THE ENGINEER WILL VERIFY ALL SIGN SUPPORT LOCATIONS

REFLECTIVE SHEETING ~~WILL BE~~ DESIGNATED AS:

TYPE C - HIGH SPECIFIC INTENSITY
TYPE D - NON-FLOURESCENT PRISMATIC

THE SEAL APPEARING ON THIS DOCUMENT WAS AUTHORIZED BY SIDNEY S. AFONSO PE 88055, ON JUNE 04, 2003

KBR
Engineered by KBR Technical Services, Inc

© 2003 Texas Department of Transportation

SUMMARY OF SMALL SIGNS
IH 35
LOOP 20 TO UNIROYAL ROAD

SHEET 8 OF 8

DIST NO	FEDERAL AID PROJECT NO	SHEET NO
6	NH-2002 (79)	811
STATE DIST	COUNTY	
LAREDO	WEBB	

CONT	SECT	JOB	HIGHWAY NO
0018	05	062, ETC	IH 35

b21ssp08.dgn-09 HOUFILE023 \hcivil\cf0130\ 6/4/2003

SUMMARY OF LARGE SIGNS

PLAN LAYOUT SHEET NO	SIGN NO	SIGN BACK-GROUND COLOR	SIGN TEXT	SIGN DIMENSIONS (FT)	ROUTE SHIELDS, EXIT ONLY PANELS, & OTHER ATTACHMENTS ALUMINUM (TYPE A)	GROUND MOUNT PLYWOOD (TYPE A)	GROUND MOUNT ALUMINUM (TYPE G)	OVERHEAD ALUMINUM (TYPE O)	TYPE OF MOUNT	"X" DIMENSION ◒ post 1	post 2	post 3	GALVANIZED STRUCTURAL STEEL SIZE	Left post 1	Center post 2	Right post 3	TOTAL WEIGHT LB	DRILLED SHAFT FEET NON-REINF 12"Φ	REINFORCED 24"Φ	REINFORCED 42"Φ	RIPRAP (CONC) (CL B) (5 IN) CY
			ITEM		636	634	637	642					647					656		416	432
			DESCRIPTION		501	501	501	501					501					501	502	507	529
													* LG RDSD SIGN SUPPORT					FND LG RDSD SIGN SUPPORT			
12	1	GREEN	9	3.5'X2.0'			7.00		MOUNT ON EXISTING SIGN												
13	2	GREEN/BLUE	✈ H	(3.0'X3.0')X2	18.00																
		GREEN	EXIT 9	6.0'X2.0'			12.00														
			LOOP 20	3.0'X3.0'	9.00																
			Killam Indl Blvd	21.5'X13.5'			283.5		331	5.4	5.2	4.0	W8X18	25.9	25.7	24.5	1435.2		21.8		0.5
14	5	YELLOW	WHEN FLASHING	13.0'X2.0'			26.0														
		BLUE	HIGHWAY ADVISORY RADIO TUNE TO 1610 AM																		
		BLUE	INFORMACION DE CAMINOS SINTONIZA 530 AM	13.0'X9.0'			117.0														
		YELLOW	EN LUZ INTERMITENTE	13.0'X2.0'			26.0		321	2.1	2.8		W8X18	22.1	22.8		851.6		17.0		0.3
14	R-1	GREEN	EXIT 8	6.0'X2.0'				12.00													
			LOOP 20 WEST	3.0'X3.0'	9.00																
			World Trade Bridge	24.5'X12.5'				306.25	HOSB-Z4 "R"											68	
			2 MILES																		
	R-2	GREEN/BLUE	✈ H	(3.0'X3.0')X2	18.00																
			EXIT 9	6.0'X2.0'				12.00													
			LOOP 20	3.0'X3.0'	9.00																
			Frontage Road Texas A&M Intl U	24.5'X12.0'				294.00													
			NEXT RIGHT																		
	R-3	GREEN	EXIT 12A	9.0'X2.0'				18.00													
			Port Laredo 1 MILE	15.5'X6.0'				93.00													
				SHEET TOTALS	63.00		471.50	735.25									2286.8		38.8	68	0.8

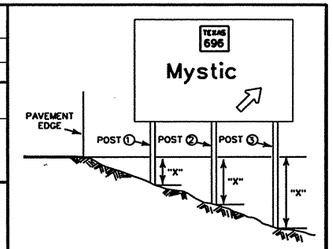

◒ The "X" dimension is the elevation difference at the post between the ground and the edge of pavement or top of curb.

Sign supports shall be located as shown on the plans, except that the Engineer may shift the sign supports, within design guidelines, where necessary to secure a more desirable location or to avoid conflict with utilities. Unless otherwise shown on the plans, the Contractor shall stake and the Engineer will verify all sign support locations.

The post lengths listed here are approximations, The corrected post lengths will be furnished by the Engineer after the contractor has placed the stud posts.

Tower heights shall be verified with the Engineer before fabrication.

FABRICATION REQUIREMENTS

GROUND MOUNT SIGNS

COLOR	BACKGROUND MATERIAL
Blue	Type C (High Specific Intensity)
Brown	Type C (High Specific Intensity)
Green	Type C (High Specific Intensity)
Orange	Type C (High Specific Intensity)
White	Type C (High Specific Intensity)
Yellow	Type C (High Specific Intensity)

COLOR	LEGEND MATERIAL
White	Type C (High Specific Intensity)
Black	Vinyl Non-reflec. Sheeting

OVERHAED SIGNS

COLOR	BACKGROUND MATERIAL
Blue	Type D (Non-fluorescent Prismatic)
Brown	Type D (Non-fluorescent Prismatic)
Green	Type D (Non-fluorescent Prismatic)
Orange	Type D (Non-fluorescent Prismatic)
White	Type D (Non-fluorescent Prismatic)
Yellow	Type D (Non-fluorescent Prismatic)

COLOR	LEGEND MATERIAL
White	Type D (Non-fluorescent Prismatic)
Black	Vinyl Non-reflec. Sheeting

ROUTE SHEILDS, EXIT ONLY PANELS, AND OTHER ATTACHMENTS:

See IM & IE Standards for details.

ROUTING PLAQUES:

HC - HAZARDOUS CARGO PERMITTED

NC - HAZARDOUS CARGO PROHIBITED

✈ - AIRPORT H - HOSPITAL

STATE OF TEXAS SIDNEY S. AFONSO No. 88055 REGISTERED PROFESSIONAL ENGINEER

THE SEAL APPEARING ON THIS DOCUMENT WAS AUTHORIZED BY SIDNEY S. AFONSO PE 88055, ON JUNE 04, 2003

KBR

Engineered by KBR Technical Services, Inc

©2003 Texas Department of Transportation

IH 35
LOOP 20 TO UNIROYAL ROAD

SUMMARY OF LARGE SIGNS

SHEET 1 OF 4

FED RD DIV NO	FEDERAL AID PROJECT NO		SHEET NO
6	NH-2002 (79)		812
STATE	STATE DIST		COUNTY
TEXAS	LAREDO		WEBB
CONT	SECT	JOB	HIGHWAY NO
0018	05	062, ETC	IH 35

REF FILE(S): J01LOP01.BDR, BDR LV ON = 47:57:58.60-62
HOUFILE023 \hcivil\c(0130\ b21lsp01.dgn-10 6/4/2003

SUMMARY OF LARGE SIGNS

PLAN LAYOUT SHEET NO	SIGN NO	SIGN BACK-GROUND COLOR	SIGN TEXT	SIGN DIMENSIONS (FT)	ROUTE SHIELDS, EXIT ONLY PANELS, & OTHER ATTACHMENTS ALUMINUM (TYPE A)	GROUND MOUNT PLYWOOD (TYPE A)	GROUND MOUNT ALUMINUM (TYPE G)	OVERHEAD ALUMINUM (TYPE O)	TYPE OF MOUNT	"X" DIMENSION ◒ post 1	post 2	post 3	GALVANIZED STRUCTURAL STEEL SIZE	Left post 1	Center post 2	Right post 3	TOTAL WEIGHT LB	DRILLED SHAFT FEET NON-REINF 12"Φ	REINFORCED 24"Φ	REINFORCED 42"Φ	RIPRAP (CONC) (CL B) (5 IN) CY
			ITEM	636	634	637		642					647					656		416	432
			DESCRIPTION	501	501	501		501					501 ▪ LG RDSD SIGN SUPPORT					501 FND LG RDSD SIGN SUPPORT	502	507	529
12	1	GREEN	9	3.5'X2.0'			7.00		MOUNT ON EXISTING SIGN												
13	2	GREEN/BLUE	The existing sign was relocated. Contractor placed new structural steel.	(3.0'X3.0')X2	~~18.00~~																
		GREEN	EXIT 9	6.0'X2.0'			~~12.00~~														
			LOOP 20	3.0'X3.0'	~~9.00~~																
			Killam Indl Blvd	21.0'X13.5'			~~283.5~~		331	5.4	5.2	4.0	W8X18	25.9	25.7	24.5	1435.2		21.8		0.5
14	5	YELLOW	WHEN FLASHING	13.0'X2.0'			26.0														
		BLUE	HIGHWAY ADVISORY RADIO TUNE TO 1610 AM																		
		BLUE	INFORMACION DE CAMINOS SINTONIZA 530 AM	13.0'X9.0'			117.0														
		YELLOW	EN LUZ INTERMITENTE	13.0'X2.0'			26.0		321	2.1	2.8		W8X18	22.1	22.8		851.6		17.0		0.3
14	R-1	GREEN	EXIT 8	6.0'X2.0'				12.00	HOSB-Z4 "R"												
			LOOP 20 WEST World Trade Bridge	3.0'X3.0' 24.5'X12.5'	9.00			306.25												68	
			2 MILES																		
	R-2	GREEN/BLUE	EXIT 9	(3.0'X3.0')X2 6.0'X2.0'	18.00			12.00													
			2 LOOP 20 Frontage Road Killam Indl Blvd Texas A&M Intl Univ	3.0'X3.0' 24.5'X12.0'	9.00			294.00													
			NEXT RIGHT																		
	R-3	GREEN	EXIT 12A	9.0'X2.0'				18.00													
			Port Laredo 1 MILE	15.5'X6.0'				93.00													
				SHEET TOTALS	63.00		471.50	735.25								SHEET TOTALS	2286.8		38.8	68	0.8

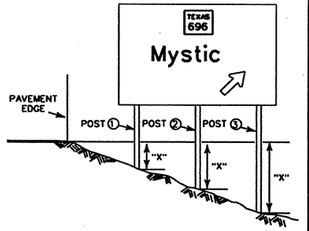

◒ The "X" dimension is the elevation difference at the post between the ground and the edge of pavement or top of curb.

Sign supports ~~shall be~~ located as shown on the plans, except that the Engineer may shift the sign supports, within design guidelines, where necessary to secure a more desirable location or to avoid conflict with utilities. Unless otherwise shown on the plans, the Contractor ~~shall~~ stake and the Engineer will verify all sign support locations.

The post lengths listed here are approximations. The corrected post lengths will be furnished by the Engineer after the contractor has placed the stud posts.

Tower heights shall be verified with the Engineer before fabrication.

FABRICATION REQUIREMENTS

GROUND MOUNT SIGNS

COLOR	BACKGROUND MATERIAL
Blue	Type C (High Specific Intensity)
Brown	Type C (High Specific Intensity)
Green	Type C (High Specific Intensity)
Orange	Type C (High Specific Intensity)
White	Type C (High Specific Intensity)
Yellow	Type C (High Specific Intensity)

COLOR	LEGEND MATERIAL
White	Type C (High Specific Intensity)
Black	Vinyl Non-reflec. Sheeting

OVERHAED SIGNS

COLOR	BACKGROUND MATERIAL
Blue	Type D (Non-fluorescent Prismatic)
Brown	Type D (Non-fluorescent Prismatic)
Green	Type D (Non-fluorescent Prismatic)
Orange	Type D (Non-fluorescent Prismatic)
White	Type D (Non-fluorescent Prismatic)
Yellow	Type D (Non-fluorescent Prismatic)

COLOR	LEGEND MATERIAL
White	Type D (Non-fluorescent Prismatic)
Black	Vinyl Non-reflec. Sheeting

ROUTE SHEILDS, EXIT ONLY PANELS, AND OTHER ATTACHMENTS:

See IM & IE Standards for details.

ROUTING PLAQUES:

(HC) - HAZARDOUS CARGO PERMITTED

(HC) - HAZARDOUS CARGO PROHIBITED

- AIRPORT

(H) - HOSPITAL

DATE	BY	REV	REVISION
11/30/04	AA	2	ADD AUXILIARY LANE

STATE OF TEXAS SIDNEY S. AFONSO 88055 REGISTERED PROFESSIONAL ENGINEER

THE SEAL APPEARING ON THIS DOCUMENT WAS AUTHORIZED BY SIDNEY S. AFONSO PE 88055, ON FEBRUARY 10, 2005

KBR

Engineered by KBR Technical Services, Inc

©2004 Texas Department of Transportation

IH 35
LOOP 20 TO UNIROYAL ROAD

SUMMARY OF LARGE SIGNS

SHEET 1 OF 4

FED RD DIV NO	FEDERAL AID PROJECT NO	SHEET NO
6	NH-2002 (79)	312
STATE	STATE DIST	COUNTY
TEXAS	LAREDO	WEBB
CONT / SECT / JOB		HIGHWAY NO
0018 / 05 / 062, ETC		IH 35

REF FILE(S): J01LOP01.BDR. BDR LV ON = 47.57.58.60-62

b21sp01.dgn-10 HOUFILE023 \hciwl\c10130\ 2/10/2005

SUMMARY OF LARGE SIGNS

PLAN LAYOUT SHEET NO	SIGN NO	SIGN BACK-GROUND COLOR	SIGN TEXT	SIGN DIMENSIONS (FT)	ROUTE SHIELDS, EXIT ONLY PANELS, & OTHER ATTACHMENTS ALUMINUM (TYPE A) (636)	GROUND MOUNT PLYWOOD (TYPE A) (634)	GROUND MOUNT ALUMINUM (TYPE G) (637)	OVERHEAD ALUMINUM (TYPE O) (642)	TYPE OF MOUNT	"X" DIMENSION ◒ post 1	post 2	post 3	GALVANIZED STRUCTURAL STEEL (647, 501, * LG RDSD SIGN SUPPORT) SIZE	Left post 1	Center post 2	Right post 3	TOTAL WEIGHT LB	DRILLED SHAFT (656, 501, FND LG RDSD SIGN SUPPORT) FEET NON-REINF 12"Φ (501)	REINFORCED 24"Φ (502)	REINFORCED 42"Φ (507)	RIPRAP (CONC) (CL B) (5 IN) CY (432, 529)
				DESCRIPTION	501	501	501	501										501	502	507	529
15	6	GREEN/BLUE GREEN	The existing sign was relocated. Contractor placed new structural steel. EXIT 9 LOOP 20 Killam Indl Blvd ½ MILE	(3.0'X3.0')X2 6.0'X2.0' 3.0'X3.0' 21.0'X12.5'	~~18.00~~ ~~9.00~~		~~12.00~~ ~~262.5~~		331	5.5	6.0	5.1	W8X18	25.0	25.5	24.6	1418.1		21.8		0.5
15	7	WHITE	MAXIMUM LEGAL SPEEDS DAY NIGHT MANUFACTURED HOUSES 55 55 AND HOUSE TRAILERS ALL OTHER VEHICLES 70 65 EXCEPT SCHOOL BUSES	26.5'X8.0'			212.0		331	1.9	2.5	3.0	W6X15	16.9	17.5	18.0	839.6		25.5		0.5
16	10	GREEN	EXIT 12A Port Laredo ½ MILE	9.0'X2.0' 15.5'X6.0'			18.00 93.00		321	2.6	3.9		W6X9	15.6	16.9		358.7		8.0		0.5
18	9	GREEN/BLUE GREEN	The existing sign was relocated. Contractor placed new structural steel. EXIT 9 LOOP 20 Killam Indl Blvd 1 MILE	(3.0'X3.0')X2 6.0'X2.0' 3.0'X3.0' 21.0'X12.5'	~~18.00~~ ~~9.00~~		~~12.00~~ ~~262.5~~		331	4.0	4.2	3.5	W8X18	23.5	23.7	23.0	1329.4		16.5		0.5
19	11	GREEN	EXIT 12A Port Laredo	9.0'X2.0' 15.5'X7.5'			18.00 116.25		321	1.7	1.2		W6X12	16.2	15.7		463.8		8.0		0.5
20	12	GREEN	12A EXIT	5.0'X2.0' 6.0'X5.0'			10.0 30.0		321	0.7	0.8		S3X5.7	12.7	12.8		203.2	7.0			0.3
	13	GREEN	EXIT 12B Carrier Dr Uniroyal Rd 1 MILE	9.0'X2.0' 15.5'X8.5'			18.00 131.75		321	1.2	2.2		W6X12	16.7	17.7		493.4		8.0		0.5
				SHEET 2 TOTALS	54.00		1196.00									SHEET 2 TOTALS	5106.2	7.0	87.8		3.3
				SHEET 1 & 2 CSJ 0018-06-147 TOTAL	117.00		1667.50	735.25								TOTAL CSJ 0018-06-147 TOTAL	7393.0	7.0	126.6	68	4.1

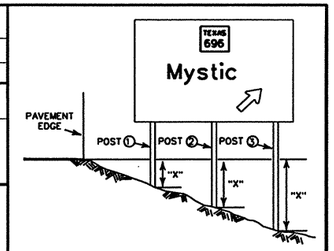

◒ The "X" dimension is the elevation difference at the post between the ground and the edge of pavement or top of curb.

Sign supports ~~shall be~~ located as shown on the plans, except that the Engineer may shift the sign supports, within design guidelines, where necessary to secure a more desirable location or to avoid conflict with utilities. Unless otherwise shown on the plans, the Contractor [redacted] stake and the Engineer will verify all sign support locations.

The post lengths listed here are approximations, The corrected post lengths will be furnished by the Engineer after the contractor has placed the stud posts.

Tower heights shall be verified with the Engineer before fabrication.

FABRICATION REQUIREMENTS

GROUND MOUNT SIGNS

COLOR	BACKGROUND MATERIAL
Blue	Type C (High Specific Intensity)
Brown	Type C (High Specific Intensity)
Green	Type C (High Specific Intensity)
Orange	Type C (High Specific Intensity)
White	Type C (High Specific Intensity)
Yellow	Type C (High Specific Intensity)

COLOR	LEGEND MATERIAL
White	Type C (High Specific Intensity)
Black	Vinyl Non-reflec. Sheeting

OVERHAED SIGNS

COLOR	BACKGROUND MATERIAL
Blue	Type D (Non-fluorescent Prismatic)
Brown	Type D (Non-fluorescent Prismatic)
Green	Type D (Non-fluorescent Prismatic)
Orange	Type D (Non-fluorescent Prismatic)
White	Type D (Non-fluorescent Prismatic)
Yellow	Type D (Non-fluorescent Prismatic)

COLOR	LEGEND MATERIAL
White	Type D (Non-fluorescent Prismatic)
Black	Vinyl Non-reflec. Sheeting

ROUTE SHEILDS, EXIT ONLY PANELS, AND OTHER ATTACHMENTS:

See IM & IE Standards for details.

ROUTING PLAQUES:

- HC - HAZARDOUS CARGO PERMITTED
- HC - HAZARDOUS CARGO PROHIBITED
- AIRPORT
- H - HOSPITAL

THE SEAL APPEARING ON THIS DOCUMENT WAS AUTHORIZED BY SIDNEY S. AFONSO PE 88055, ON JUNE 04, 2003

STATE OF TEXAS SIDNEY S. AFONSO 88055 REGISTERED PROFESSIONAL ENGINEER

Sidney S. Afonso

KBR

Engineered by KBR Technical Services, Inc

©2003 Texas Department of Transportation

IH 35
LOOP 20 TO UNIROYAL ROAD

SUMMARY OF LARGE SIGNS

SHEET 2 OF 4

FED RD DIV NO	FEDERAL AID PROJECT NO	SHEET NO
6	NH-2002 (79)	813
STATE	STATE DIST	COUNTY
TEXAS	LAREDO	WEBB
CONT	SECT / JOB	HIGHWAY NO
0018	05 / 062, ETC	IH 35

REF FILE(S): J01LDP01.BDR, BDR LV ON = 47,57,58,60-62

b21lsp02.dgn-08 HOUFILE023 \hcivil\cf0130\ 6/4/2003

SUMMARY OF LARGE SIGNS

PLAN LAYOUT SHEET NO	SIGN NO	SIGN BACK-GROUND COLOR	SIGN TEXT	SIGN DIMENSIONS (FT)	ROUTE SHIELDS, EXIT ONLY PANELS, & OTHER ATTACHMENTS ALUMINUM (TYPE A)	GROUND MOUNT PLYWOOD (TYPE A)	GROUND MOUNT ALUMINUM (TYPE G)	OVERHEAD ALUMINUM (TYPE O)	TYPE OF MOUNT	"X" DIMENSION ◒ post 1	post 2	post 3	GALVANIZED STRUCTURAL STEEL SIZE	Left post 1	Center post 2	Right post 3	TOTAL WEIGHT LB	DRILLED SHAFT FEET NON-REINF 12"Ø	REINFORCED 24"Ø	REINFORCED 42"Ø	RIPRAP (CONC) (CL B) (5 IN) CY
				ITEM	636	634	637	642					647					656		416	432
				DESCRIPTION	501	501	501	501					501					501	502	507	529
													* LG RDSD SIGN SUPPORT					FND LG RDSD SIGN SUPPORT			
22	15	GREEN	EXIT 12B Carrier Dr Uniroyal Rd ½ MILE	9.0'X2.0' 15.5'X8.5'			18.00 131.75		321	1.9	2.0		W6X12	17.4	17.5		499.5		9.0		0.5
25	18	GREEN	EXIT 12B Carrier Dr Uniroyal Rd ↗	9.0'X2.0' 16.0'X10.0'			18.00 160.00		321	5.4	6.3		W8X18	22.4	23.3		865.5		12.0		0.5
26	19	GREEN	12B EXIT ↗	5.0'X2.0' 4.0'X3.5'			10.00 14.00		321	0.1	0.2		S3X5.7	10.6	10.7		179.0	7.0			0.3
	20	GREEN	Encinal 25 San Antonio 141	21.0'X6.0'			126.00		331	2.4	4.8	7.1	W6X9	15.4	17.8	20.1	579.4		9.8		0.5
30	21	GREEN	12 EXIT ↗	3.5'X2.0' 6.0'X5.0'			7.00 30.00		321	-.1	-.3		S3X5.7	11.9	11.7		192.5	6.0			0.3
31	22	GREEN	EXIT 12 Carrier Dr ↗	7.5'X2.0' 14.0'X7.5'			15.00 105.00		321	5.7	7.9		W6X15	20.2	22.4		675.2		12.0		0.5
				SHEET TOTALS			634.75							SHEET TOTALS			2991.1	13.0	42.8		2.6

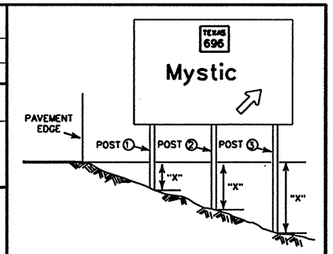

◒ The "X" dimension is the elevation difference at the post between the ground and the edge of pavement or top of curb.

Sign supports ~~shall be~~ located as shown on the plans, except that the Engineer may shift the sign supports, within design guidelines, where necessary to secure a more desirable location or to avoid conflict with utilities. Unless otherwise shown on the plans, the Contractor ~~shall~~ stake and the Engineer will verify all sign support locations.

The post lengths listed here are approximations, The corrected post lengths will be furnished by the Engineer after the contractor has placed the stud posts.

Tower heights shall be verified with the Engineer before fabrication.

FABRICATION REQUIREMENTS

GROUND MOUNT SIGNS

COLOR	BACKGROUND MATERIAL
Blue	Type C (High Specific Intensity)
Brown	Type C (High Specific Intensity)
Green	Type C (High Specific Intensity)
Orange	Type C (High Specific Intensity)
White	Type C (High Specific Intensity)
Yellow	Type C (High Specific Intensity)
COLOR	**LEGEND MATERIAL**
White	Type C (High Specific Intensity)
Black	Vinyl Non-reflec. Sheeting

OVERHAED SIGNS

COLOR	BACKGROUND MATERIAL
Blue	Type D (Non-fluorescent Prismatic)
Brown	Type D (Non-fluorescent Prismatic)
Green	Type D (Non-fluorescent Prismatic)
Orange	Type D (Non-fluorescent Prismatic)
White	Type D (Non-fluorescent Prismatic)
Yellow	Type D (Non-fluorescent Prismatic)
COLOR	**LEGEND MATERIAL**
White	Type D (Non-fluorescent Prismatic)
Black	Vinyl Non-reflec. Sheeting

ROUTE SHEILDS, EXIT ONLY PANELS, AND OTHER ATTACHMENTS:

See IM & IE Standards for details.

ROUTING PLAQUES:

- HC - HAZARDOUS CARGO PERMITTED
- NC - HAZARDOUS CARGO PROHIBITED
- ✈ - AIRPORT
- H - HOSPITAL

STATE OF TEXAS SIDNEY S. AFONSO P.E. 88055 REGISTERED PROFESSIONAL ENGINEER

THE SEAL APPEARING ON THIS DOCUMENT WAS AUTHORIZED BY SIDNEY S. AFONSO PE 88055, ON JUNE 04, 2003

Sidney S. Afonso

KBR

Engineered by KBR Technical Services, Inc

©2003 Texas Department of Transportation

IH 35
LOOP 20 TO UNIROYAL ROAD

SUMMARY OF LARGE SIGNS

SHEET 3 OF 4

FED RD DIV NO	FEDERAL AID PROJECT NO	SHEET NO
6	NH-2002 (79)	8/4
STATE	STATE DIST	COUNTY
TEXAS	LAREDO	WEBB
CONT	SECT / JOB	HIGHWAY NO
0018	05 / 062, ETC	IH 35

REF FILE(S): J01LOP01.BDR, BDR LV ON = 47,57,58,60-62
HOUFILE023 \hchvl\cf0130\ 6/4/2003
b2lisp03.dgn-07

SUMMARY OF LARGE SIGNS

PLAN LAYOUT SHEET NO	SIGN NO	SIGN BACK-GROUND COLOR	SIGN TEXT	SIGN DIMENSIONS (FT)	ROUTE SHIELDS, EXIT ONLY PANELS, & OTHER ATTACHMENTS ALUMINUM (TYPE A)	GROUND MOUNT PLYWOOD (TYPE A)	GROUND MOUNT ALUMINUM (TYPE G)	OVERHEAD ALUMINUM (TYPE O)	TYPE OF MOUNT	"X" DIMENSION ◒ post ①	post ②	post ③	GALVANIZED STRUCTURAL STEEL SIZE	Left post ①	Center post ②	Right post ③	TOTAL WEIGHT LB	DRILLED SHAFT FEET NON-REINF 12"Ø	REINFORCED 24"Ø	REINFORCED 42"Ø	RIPRAP (CONC) (CL B) (5 IN) CY
			ITEM		636	634	637	642					647					656		416	432
			DESCRIPTION		501	501	501	501					501					501	502	507	529
													* LG RDSD SIGN SUPPORT					FND LG RDSD SIGN SUPPORT			
33	24	GREEN	13 EXIT ↗	5.0'X2.0'			10.0														
				6.0'X5.0'			30.0		321	0.3	0.4		S3X5.7	12.3	12.4		198.1	6.0			0.3
33	25	GREEN	EXIT 13 Uniroyal Rd ↗	7.5'X2.0'			15.00														
				15.5'X7.5'			116.25		321	4.4	6.2		W6X15	18.9	20.7		629.6		12.0		0.5
	26	GREEN	EXIT 12 Carrier Dr 1/2 MILE	7.5'X2.0'			15.00														
				14.0'X6.0'			84.00		321	2.0	3.1		W6X9	15.0	16.1		346.8		7.0		0.3
	27	GREEN	EXIT 13 Uniroyal Rd 1/2 MILE	7.5'X2.0'			15.00														
				15.5'X6.0'			93.00		321	2.6	3.9		W6X9	15.6	16.9		358.7		9.0		0.5
										←			ESTIMATED								→
	28	GREEN	EXIT 13 Uniroyal Rd 1 MILE	7.5'X2.0'			15.00														
				15.5'X6.0'			93.00		321	2.6	3.9		W6X9	15.6	16.9		358.7		9.0		0.5
										←			ESTIMATED								→
				SHEET TOTALS			486.25										SHEET TOTALS 1891.9	6.0	37.0		2.1
				CSJ: 0018-05-062 TOTAL			1121.00										CSJ: 0018-05-062 TOTAL 4883.0	19.0	79.8		4.7
				CSJ: 0018-06-147 TOTAL	117.00		1667.50	735.25									CSJ: 0018-06-147 TOTAL 7393.0	7.0	126.6	68.0	4.1
				GRAND TOTAL	117.00		2788.50	735.25									GRAND TOTAL 12276.0	26.0	206.4	68.0	8.8

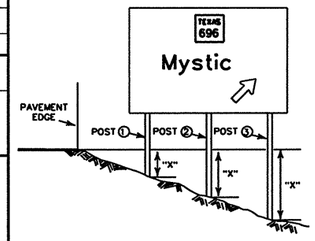

◒ The "X" dimension is the elevation difference at the post between the ground and the edge of pavement or top of curb.

Sign supports ~~shall be~~ located as shown on the plans, except that the Engineer may shift the sign supports, within design guidelines, where necessary to secure a more desirable location or to avoid conflict with utilities. Unless otherwise shown on the plans, the Contractor ~~shall~~ stake and the Engineer will verify all sign support locations.

The post lengths listed here are approximations, The corrected post lengths will be furnished by the Engineer after the contractor has placed the stud posts.

Tower heights shall be verified with the Engineer before fabrication.

FABRICATION REQUIREMENTS

SIGN BACKGROUND:

COLOR	MATERIAL
Blue	Type C (High Specific Intensity)
Brown	Type C (High Specific Intensity)
Green	Type C (High Specific Intensity)
Orange	Type C (High Specific Intensity)
White	Type C (High Specific Intensity)
Yellow	Type C (High Specific Intensity)

ROUTING PLAQUES:

- HC - HAZARDOUS CARGO PERMITTED
- NHC - HAZARDOUS CARGO PROHIBITED
- AIRPORT
- H - HOSPITAL

SIGN LEGEND AND BORDERS:

COLOR	MATERIAL
White	Type C (High Specific Intensity)
Black	Vinyl Non-reflec. Decal Sheeting

ROUTE SHEILDS, EXIT ONLY PANELS, AND OTHER ATTACHMENTS:

See IM(1)M, IE(2)M and IE(4)M for additional details

STATE OF TEXAS SIDNEY S. AFONSO P.E. 88055 REGISTERED PROFESSIONAL ENGINEER

THE SEAL APPEARING ON THIS DOCUMENT WAS AUTHORIZED BY SIDNEY S. AFONSO PE 88055, ON JUNE 04, 2003

KBR

Engineered by KBR Technical Services, Inc

©2003 Texas Department of Transportation

IH 35
LOOP 20 TO UNIROYAL ROAD

SUMMARY OF LARGE SIGNS

SHEET 4 OF 4

FED RD DIV NO	FEDERAL AID PROJECT NO	SHEET NO
6	NH-2002 (79)	815
STATE	STATE DIST	COUNTY
TEXAS	LAREDO	WEBB
CONT	SECT / JOB	HIGHWAY NO
0018	05 / 062, ETC	IH 35

6/4/2003

HOUFILE023 \hcivil\c10130\

b21lsp04.dgn-08

REF FILE(S): J01LOP01.BDR. BDR LV ON = 47.57.58.60-62

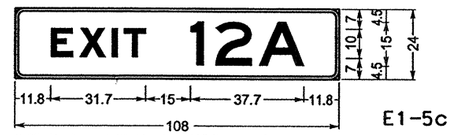

E1-5c

3.0" Radius, 1.0" Border, White on Green;
[EXIT 12A] E Mod;

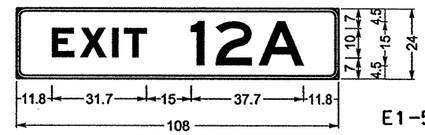

E1-5c

3.0" Radius, 1.0" Border, White on Green;
[EXIT 12A] E Mod;

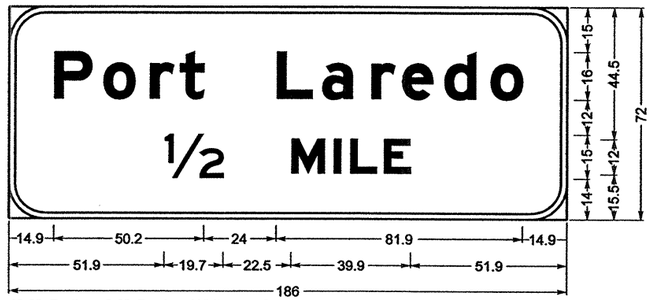

12.0" Radius, 2.0" Border, White on Green;
[Port Laredo] E Mod; [1/4 MILE] E Mod;

SIGN L10

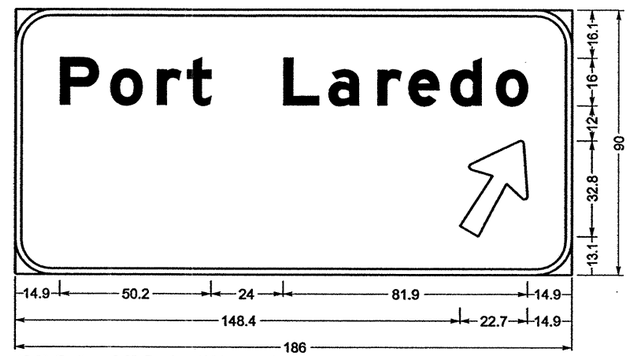

12.0" Radius, 2.0" Border, White on Green;
[Port Laredo] E Mod; Arrow A-3 - 35.6" 60°;

SIGN L11

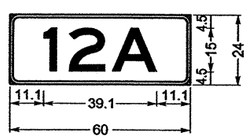

3.0" Radius, 1.0" Border,
White on Green; [12A] E;

E5-2c

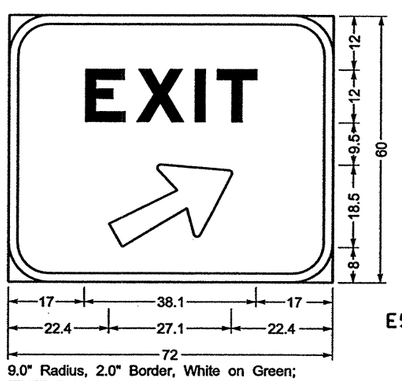

E5-1

9.0" Radius, 2.0" Border, White on Green;
[EXIT] E Mod; Arrow A-2 - 29.3" 29°;

SIGN L12

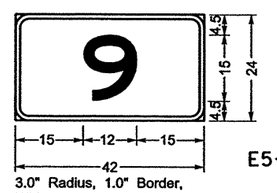

E5-2b

3.0" Radius, 1.0" Border,
White on Green; [9] E;

SIGN L1
(ATTACH TO EXISTING EXIT SIGN)

STATE OF TEXAS
SIDNEY S. AFONSO
88055
REGISTERED PROFESSIONAL ENGINEER

THE SEAL APPEARING ON THIS DOCUMENT WAS AUTHORIZED BY SIDNEY S. AFONSO PE 88055, ON APRIL 18, 2003

KBR
Engineered by KBR Technical Services, Inc

©2003 Texas Department of Transportation

IH 35
LOOP 20 TO UNIROYAL ROAD

LARGE SIGNS DETAILS

SHEET 1 OF 8

FED RD DIV NO	FEDERAL AID PROJECT NO		SHEET NO
6	NH-2002 (79)		816
STATE	STATE DIST		COUNTY
TEXAS	LAREDO		WEBB
CONT	SECT	JOB	HIGHWAY NO
0018	05	062, ETC	IH 35

REF FILE(S): j011op01.bdr, bdr LV ON = 47,57,58,60-62

b21smp01.dgn-07 HOUFILE023 \hcivil\cf0130\ 4/17/2003

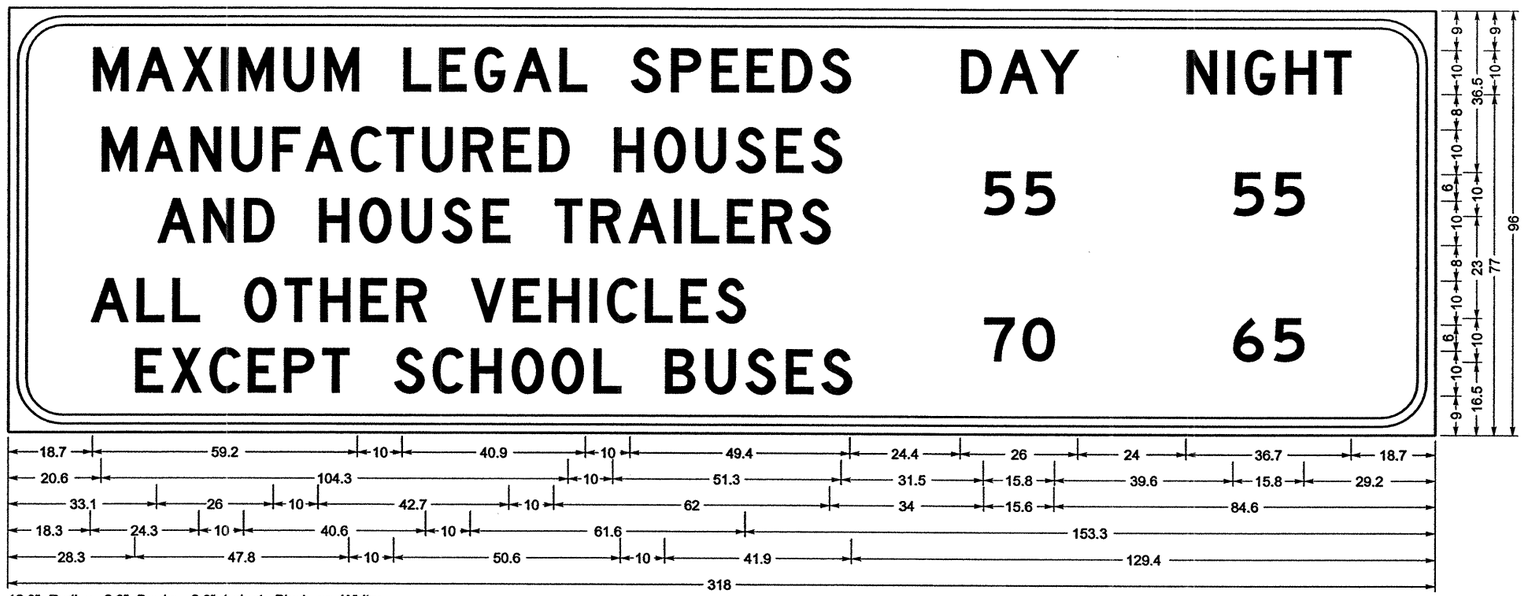

12.0" Radius, 2.0" Border, 2.0" Indent, Black on White;
[MAXIMUM LEGAL SPEEDS] D; [MANUFACTURED HOUSES] D; [AND HOUSE TRAILERS] D; [ALL OTHER VEHICLES] D; [EXCEPT SCHOOL BUSES] D; [DAY] D; [55] D; [70] D; [NIGHT] D; [55] D; [65] D;

SIGN L7

9.0" Radius, 2.0" Border, White on Yellow;
[WHEN FLASHING] Black E Mod;
12.0" Radius, 2.0" Border, White on Blue;
[HIGHWAY ADVISORY] E Mod; [RADIO] E Mod;
[TUNE TO 1610 AM] E Mod; [INFORMACION DE] E Mod;
[CAMINOS] E Mod; [SINTONIZA 530 AM] E Mod;
9.0" Radius, 2.0" Border, White on Yellow;
[EN LUZ INTERMITENTE] Black E Mod;

SIGN L5

STATE OF TEXAS
SIDNEY S. AFONSO
88055
REGISTERED PROFESSIONAL ENGINEER

THE SEAL APPEARING ON THIS DOCUMENT WAS AUTHORIZED BY SIDNEY S. AFONSO PE 88055, ON APRIL 18, 2003

KBR
Engineered by KBR Technical Services, Inc

©2003 Texas Department of Transportation

IH 35
LOOP 20 TO UNIROYAL ROAD

LARGE SIGNS DETAILS

SHEET 2 OF 8

FED RD DIV NO	FEDERAL AID PROJECT NO		SHEET NO
6	NH-2002 (79)		817
STATE	STATE DIST		COUNTY
TEXAS	LAREDO		WEBB
CONT	SECT	JOB	HIGHWAY NO
0018	05	062. ETC	IH 35

REF FILE(S): j011cp01.bdr. bdr LV ON = 47.57.58.60-62

b21smp02.dgn-04 HOUFILE023 \hcivil\c10130\ 4/17/2003

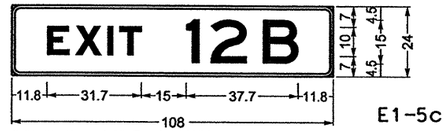

E1-5c

3.0" Radius, 1.0" Border, White on Green;
[EXIT 12B] E Mod;

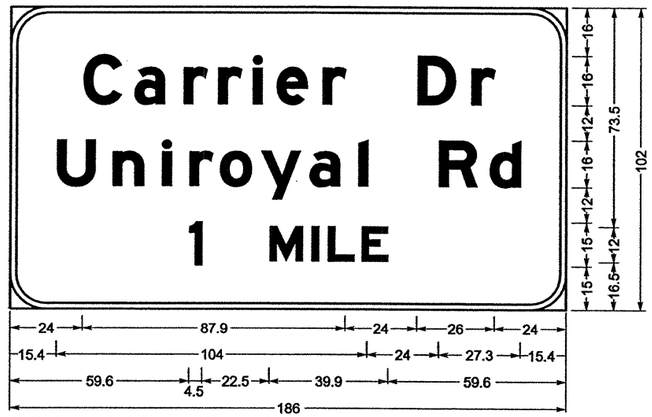

12.0" Radius, 2.0" Border, White on Green;
[Carrier Dr] E Mod; [Uniroyal Rd] E Mod; [1 MILE] E Mod;

SIGN L13

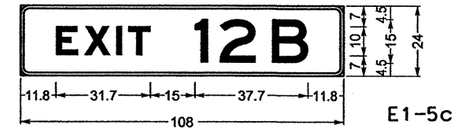

E1-5c

3.0" Radius, 1.0" Border, White on Green;
[EXIT 12B] E Mod;

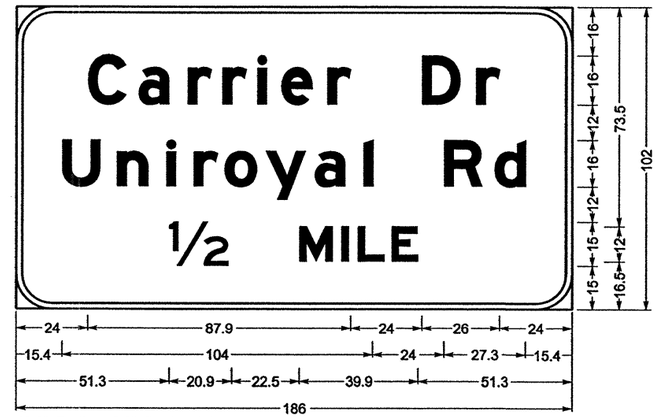

12.0" Radius, 2.0" Border, White on Green;
[Carrier Dr] E Mod; [Uniroyal Rd] E Mod; [½ MILE] E Mod;

SIGN L15

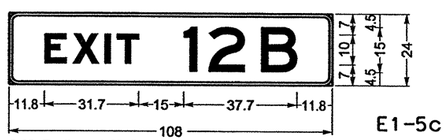

E1-5c

3.0" Radius, 1.0" Border, White on Green;
[EXIT 12B] E Mod;

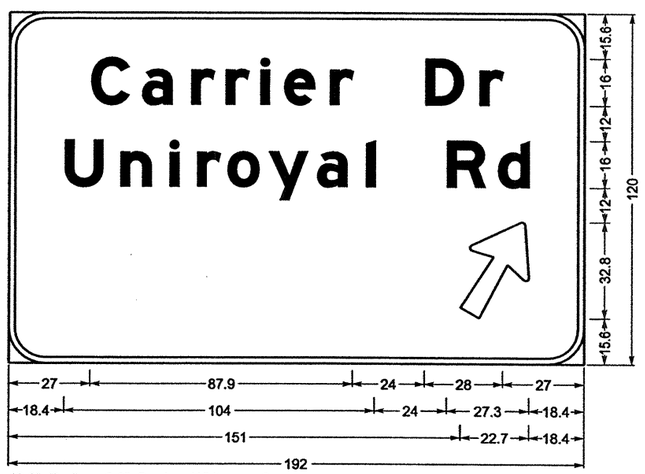

12.0" Radius, 2.0" Border, White on Green;
[Carrier Dr] E Mod; [Uniroyal Rd] E Mod; Arrow A-3 - 35.6" 60°;

SIGN L18

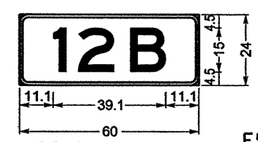

E5-2c

3.0" Radius, 1.0" Border,
White on Green; [12B] E;

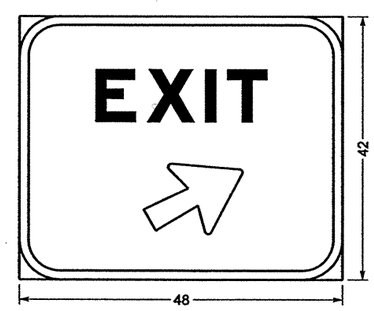

E5-1a

SIGN L19

STATE OF TEXAS
SIDNEY S. AFONSO
88055
REGISTERED
PROFESSIONAL ENGINEER

THE SEAL APPEARING ON THIS DOCUMENT WAS AUTHORIZED BY SIDNEY S. AFONSO PE 88055, ON APRIL 18, 2003

KBR
Engineered by KBR Technical Services, Inc

©2003 Texas Department of Transportation

IH 35
LOOP 20 TO UNIROYAL ROAD

LARGE SIGNS DETAILS

SHEET 3 OF 8

FED RD DIV NO	FEDERAL AID PROJECT NO		SHEET NO
6	NH-2002 (79)		818
STATE	STATE DIST		COUNTY
TEXAS	LAREDO		WEBB
CONT	SECT	JOB	HIGHWAY NO
0018	05	062, ETC	IH 35

REF FILE(S): j011op01.bdr, bdr LV ON = 47.57.58.60-62

HOUFILE023 \hcivil\cf0130\ 4/17/2003

b21smp03.dgn-08

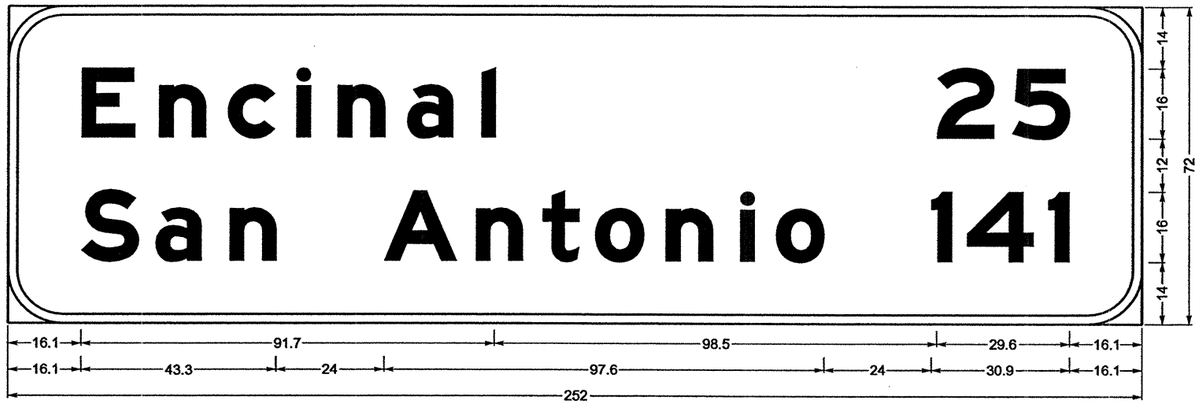

12.0" Radius, 2.0" Border, White on Green;
[Encinal] E Mod; [San Antonio] E Mod; [25] E Mod; [141] E Mod;

SIGN L20

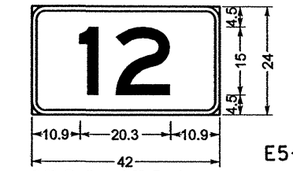

E5-2b

3.0" Radius, 1.0" Border,
White on Green; [12] E;

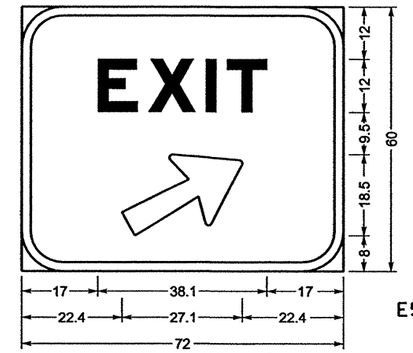

E5-1

9.0" Radius, 2.0" Border, White on Green;
[EXIT] E Mod; Arrow A-2 - 29.3" 29°;

SIGN L21

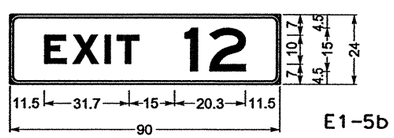

E1-5b

3.0" Radius, 1.0" Border, White on Green;
[EXIT 12] E Mod;

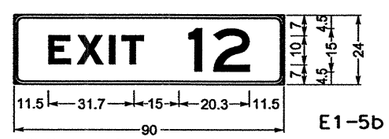

E1-5b

3.0" Radius, 1.0" Border, White on Green;
[EXIT 12] E Mod;

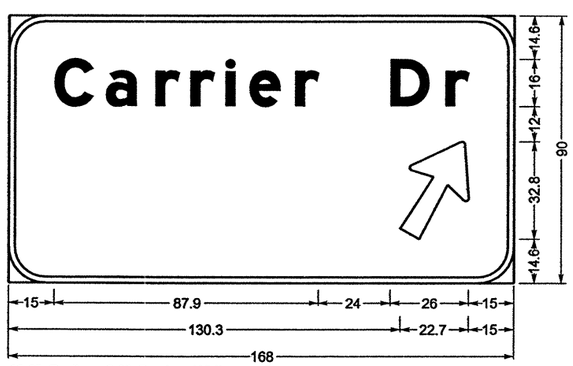

12.0" Radius, 2.0" Border, White on Green;
[Carrier Dr] E Mod; Arrow A-3 - 35.6" 60°;

SIGN L22

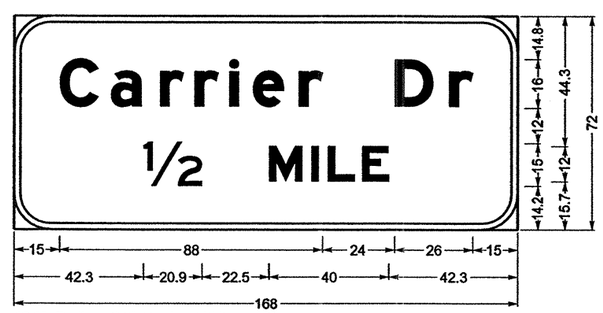

12.0" Radius, 2.0" Border, White on Green;
[Carrier Dr] E Mod; [1/2 MILE] E Mod;

SIGN L26

STATE OF TEXAS
SIDNEY S. AFONSO
88055
REGISTERED
PROFESSIONAL ENGINEER

THE SEAL APPEARING ON THIS DOCUMENT WAS AUTHORIZED BY SIDNEY S. AFONSO PE 88055, ON APRIL 18, 2003

Sidney S. Afonso

KBR
Engineered by KBR Technical Services, Inc

©2003 Texas Department of Transportation

IH 35
LOOP 20 TO UNIROYAL ROAD

LARGE SIGNS DETAILS

SHEET 4 OF 8

FED RD DIV NO	FEDERAL AID PROJECT NO		SHEET NO
6	NH-2002 (79)		819
STATE	STATE DIST		COUNTY
TEXAS	LAREDO		WEBB
CONT	SECT	JOB	HIGHWAY NO
0018	05	062, ETC	IH 35

REF FILE(S): j011op01.bdr, bdr LV ON = 47.57.58.60-62

HOUFILE023 \hciwl\c10130\ 4/17/2003 b21smp04.dgn-08

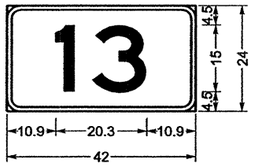

3.0" Radius, 1.0" Border, White on Green; [13] E; E5-2b

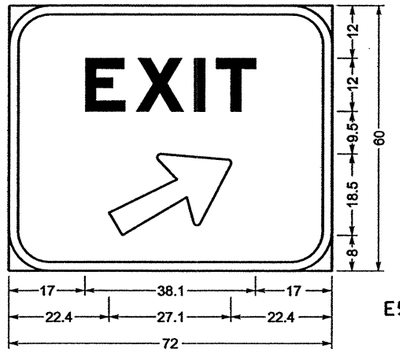

E5-1

9.0" Radius, 2.0" Border, White on Green; [EXIT] E Mod; Arrow A-2 - 29.3" 29°;

SIGN L24

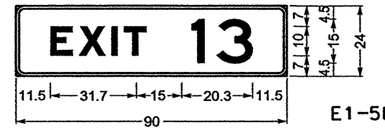

E1-5b

3.0" Radius, 1.0" Border, White on Green; [EXIT 13] E Mod;

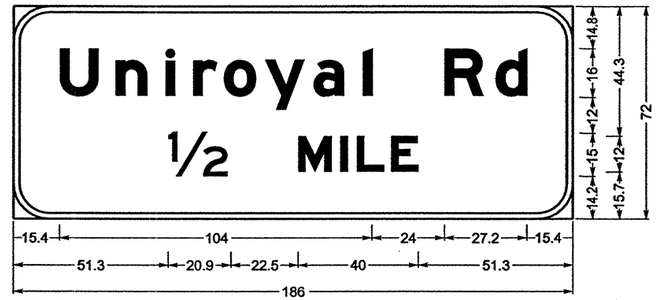

12.0" Radius, 2.0" Border, White on Green; [Uniroyal Rd] E Mod; [1/2 MILE] E Mod;

SIGN L27

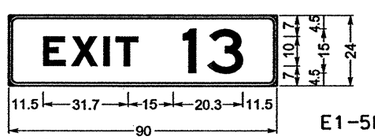

E1-5b

3.0" Radius, 1.0" Border, White on Green; [EXIT 13] E Mod;

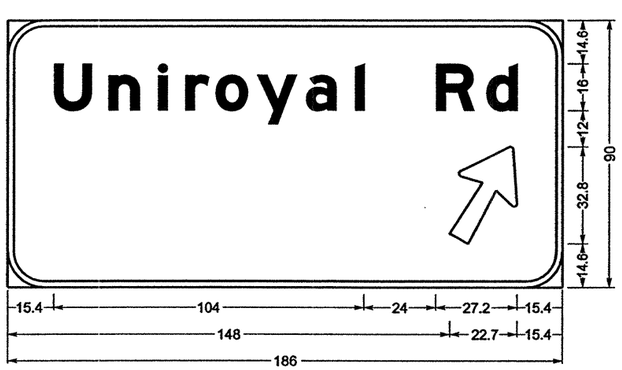

12.0" Radius, 2.0" Border, White on Green; [Uniroyal Rd] E Mod; Arrow A-3 - 35.6" 60°;

SIGN L25

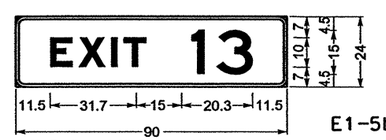

E1-5b

3.0" Radius, 1.0" Border, White on Green; [EXIT 13] E Mod;

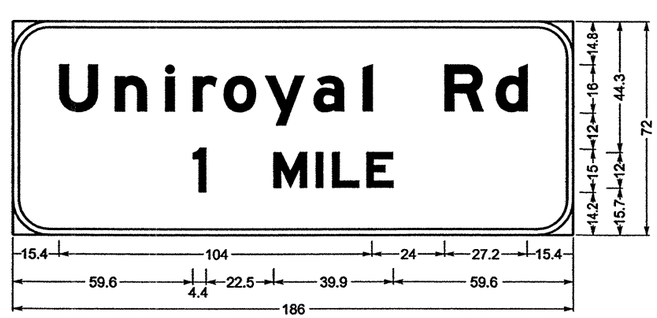

12.0" Radius, 2.0" Border, White on Green; [Uniroyal Rd] E Mod; [1 MILE] E Mod;

SIGN L28

STATE OF TEXAS
SIDNEY S. AFONSO
PE 88055
REGISTERED PROFESSIONAL ENGINEER

THE SEAL APPEARING ON THIS DOCUMENT WAS AUTHORIZED BY SIDNEY S. AFONSO PE 88055, ON APRIL 18, 2003

KBR
Engineered by KBR Technical Services, Inc

©2003 Texas Department of Transportation

IH 35
LOOP 20 TO UNIROYAL ROAD

LARGE SIGNS DETAILS

SHEET 5 OF 8

FED RD DIV NO	FEDERAL AID PROJECT NO		SHEET NO
6	NH-2002 (79)		820
STATE	STATE DIST		COUNTY
TEXAS	LAREDO		WEBB
CONT	SECT	JOB	HIGHWAY NO
0018	05	062, ETC	IH 35

REF FILE(S): J01lop01.bdr, bdr LV ON = 47,57,58,60-62

b21smp05.dgn-07 HOUFILE023 \hcivil\cf0130\ 4/17/2003

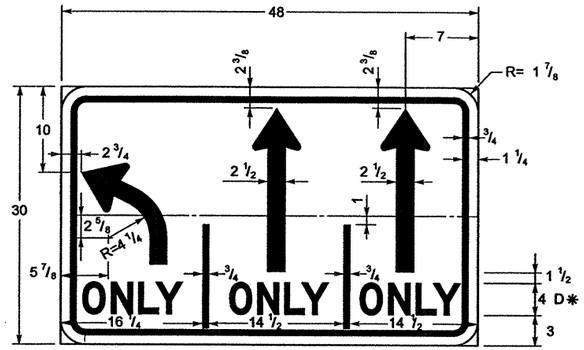

* Reduce Spacing 50%

R3-8(SPL)

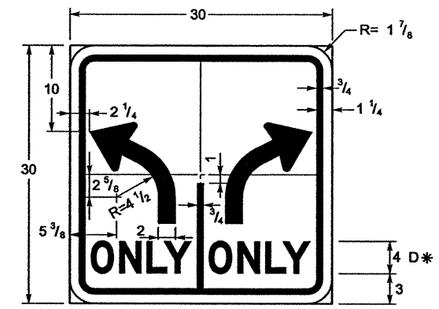

* Special Spacing

R3-8(SPL)

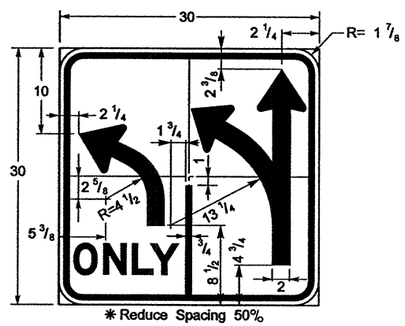

* Reduce Spacing 50%

R3-8(SPL)

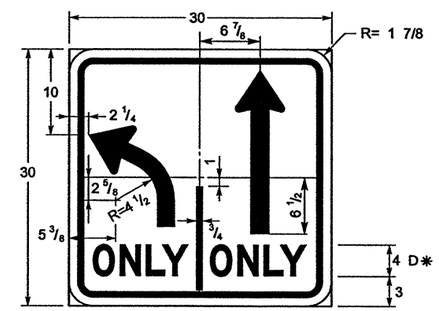

* Special Spacing

R3-8(SPL)

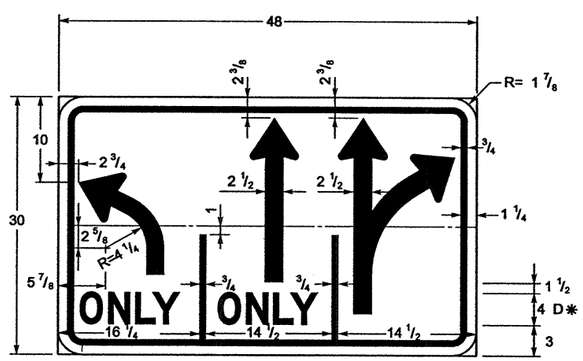

* Reduce Spacing 50%

R3-8(SPL)

NOTE: ALL DIMENSIONS ARE IN INCHES

STATE OF TEXAS
SIDNEY S. AFONSO
88055
REGISTERED
PROFESSIONAL ENGINEER

THE SEAL APPEARING ON THIS DOCUMENT WAS AUTHORIZED BY SIDNEY S. AFONSO PE 88055, ON APRIL 18, 2003

KBR
Engineered by KBR Technical Services, Inc

©2003 Texas Department of Transportation

IH 35
LOOP 20 TO UNIROYAL ROAD

LARGE SIGNS DETAILS

SHEET 6 OF 8

FED RD DIV NO	FEDERAL AID PROJECT NO		SHEET NO
6	NH-2002 (79)		821
STATE	STATE DIST		COUNTY
TEXAS	LAREDO		WEBB
CONT	SECT	JOB	HIGHWAY NO
0018	05	062, ETC	IH 35

REF FILE(S): j01lop01.bdr, bdr LV ON = 47,57,58,60-62

b21smp06.dgn-08 HOUFILE023 \hcivil\cf0130\ 4/18/2003

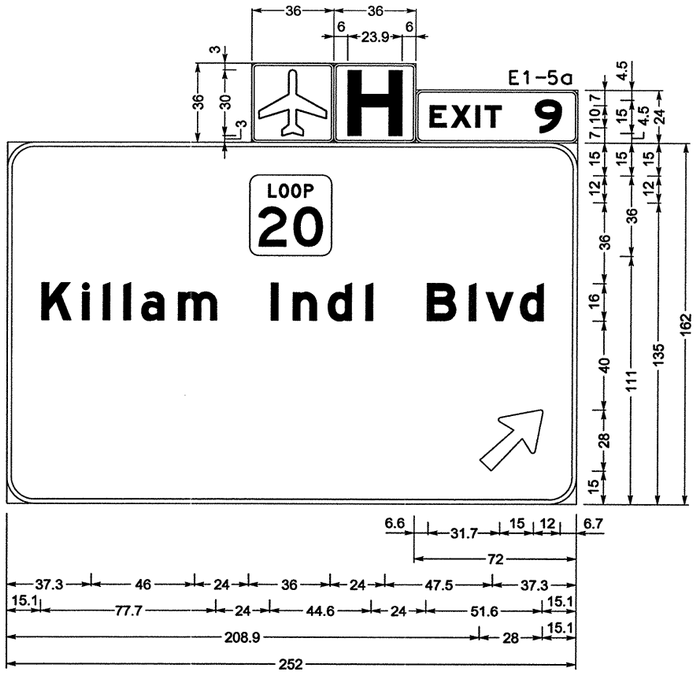

2.3" Radius, 1.0" Border, White on Green F1-5
2.3" Radius, 1.0" Border, White on Blue; "H" E Mod; FD9-2
3.0" Radius, 1.0" Border, White on Green; "EXIT 9" E Mod;
12.0" Radius, 2.0" Border, White on Green;
"EAST" E Mod; State Highway 20 M1-6L2B;
"Killam Indl Blvd" E Mod; Arrow A-3 - 35.6" 45°;

SIGN L2

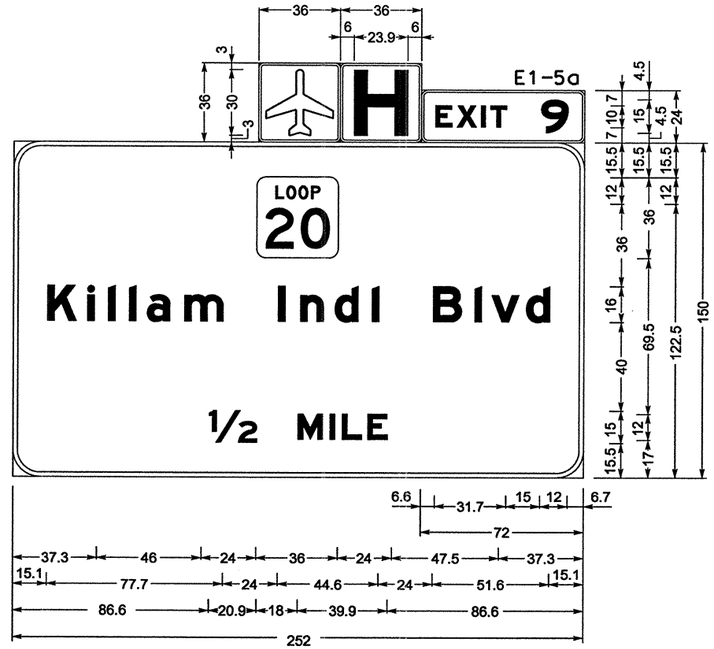

2.3" Radius, 1.0" Border, White on Green FI-5
2.3" Radius, 1.0" Border, White on Blue; "H" E Mod; FD9-2
3.0" Radius, 1.0" Border, White on Green; "EXIT 9" E Mod;
12.0" Radius, 2.0" Border, White on Green;
"EAST" E Mod; State Highway 20 M1-6L2B;
"Killam Indl Blvd" E Mod; "1/2 MILE" E Mod;

SIGN L6

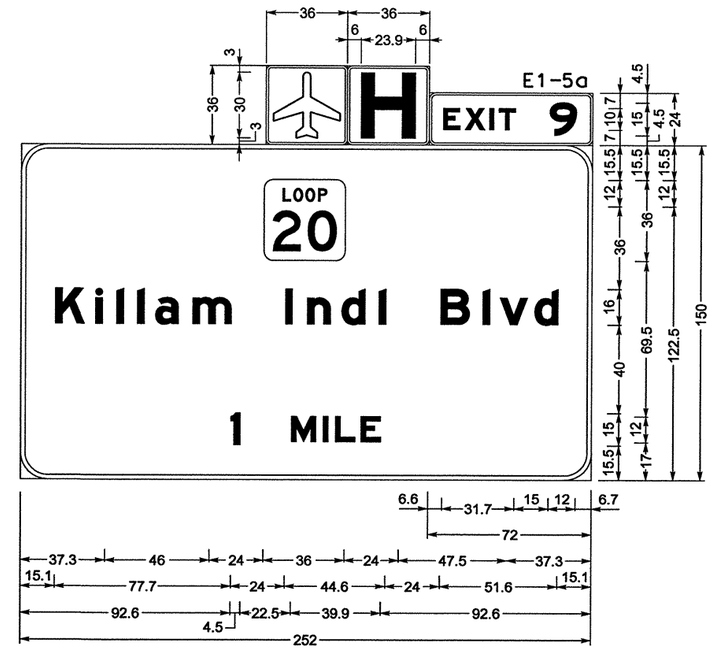

2.3" Radius, 1.0" Border, White on Green FI-5
2.3" Radius, 1.0" Border, White on Blue; "H" E Mod; FD9-2
3.0" Radius, 1.0" Border, White on Green; "EXIT 9" E Mod;
12.0" Radius, 2.0" Border, White on Green;
"EAST" E Mod; State Highway 20 M1-6L2B;
"Killam Indl Blvd" E Mod; "1 MILE" E Mod;

SIGN L9

STATE OF TEXAS
SIDNEY S. AFONSO
88055
REGISTERED PROFESSIONAL ENGINEER

THE SEAL APPEARING ON THIS DOCUMENT WAS AUTHORIZED BY SIDNEY S. AFONSO PE 88055, ON APRIL 18, 2003

KBR
Engineered by KBR Technical Services, Inc

©2003 Texas Department of Transportation

IH 35
LOOP 20 TO UNIROYAL ROAD

LARGE SIGNS DETAILS

SHEET 7 OF 8

FED RD DIV NO	FEDERAL AID PROJECT NO		SHEET NO
6	NH-2002 (79)		822
STATE	STATE DIST		COUNTY
TEXAS	LAREDO		WEBB
CONT	SECT	JOB	HIGHWAY NO
0018	05	062, ETC	IH 35

REF FILE(S): j011op01.bdr, bdr LV ON = 50,57,58,60-62

b21smp07.dgn-03 HOUFILE023 \hcivil\cf0130\ 4/30/2003

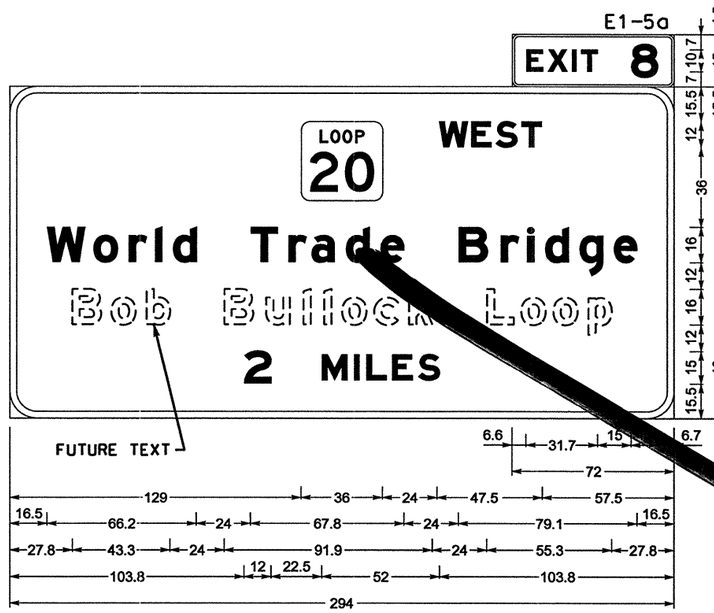

3.0" Radius, 1.0" Border, White on Green;
"EXIT 8" E Mod;
12.0" Radius, 3.0" Border, White on Green;
State Highway 20 M1-6L2B; "World Trade Bridge" E Mod; "Bob Bullock Loop" E Mod; "2 MILES" E Mod;

SIGN R-1

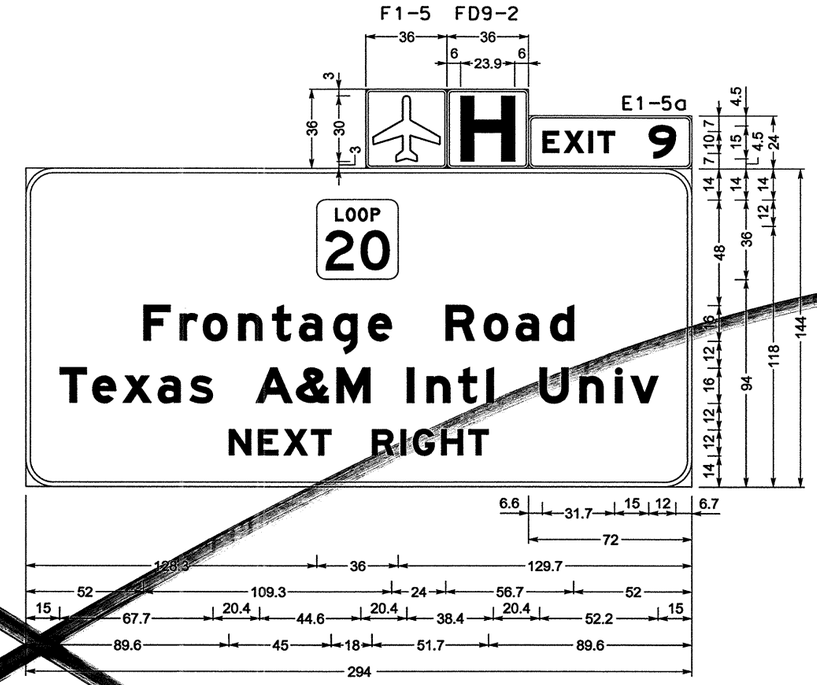

2.3" Radius, 1.0" Border, White on Green FI-5
2.3" Radius, 1.0" Border, White on Blue; "H" E Mod; FD9-2
3.0" Radius, 1.0" Border, White on Green; "EXIT 9" E Mod;
12.0" Radius, 2.0" Border, White on Green;
State Highway 20 M1-6L2B; "Frontage Road" E Mod;
"Texas A&M Intl Univ" E Mod 85% spacing; "NEXT RIGHT" E Mod;

SIGN R-2

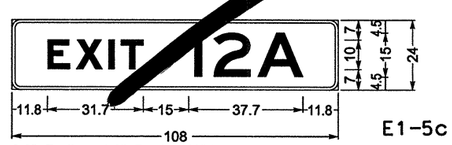

E1-5c

3.0" Radius, 1.0" Border, White on Green;
[EXIT 12A] E Mod;

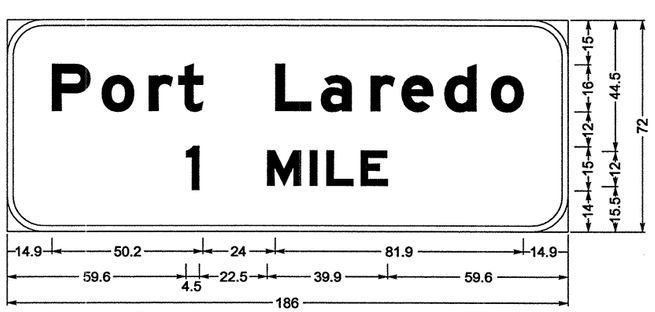

12.0" Radius, 2.0" Border, White on Green;
[Port Laredo] E Mod; [1 MILE] E Mod;

SIGN R-3

THE SEAL APPEARING ON THIS DOCUMENT WAS AUTHORIZED BY SIDNEY S. AFONSO PE 88055, ON APRIL 18, 2003

STATE OF TEXAS
SIDNEY S. AFONSO
88055
REGISTERED PROFESSIONAL ENGINEER

KBR
Engineered by KBR Technical Services, Inc

©2003 Texas Department of Transportation

IH 35
LOOP 20 TO UNIROYAL ROAD

LARGE SIGNS DETAILS

SHEET 8 OF 8

FED RD DIV NO	FEDERAL AID PROJECT NO		SHEET NO
6	NH-2002 (79)		823
STATE	STATE DIST		COUNTY
TEXAS	LAREDO		WEBB
CONT	SECT	JOB	HIGHWAY NO
0018	05	062, ETC	IH 35

REF FILE(S): j01loop01.bdr, bdr LV ON = 50,57,58,60-62

b21smp08.dgn-03 HOUFILE023 \hcivil\cf0130\ 4/30/2003

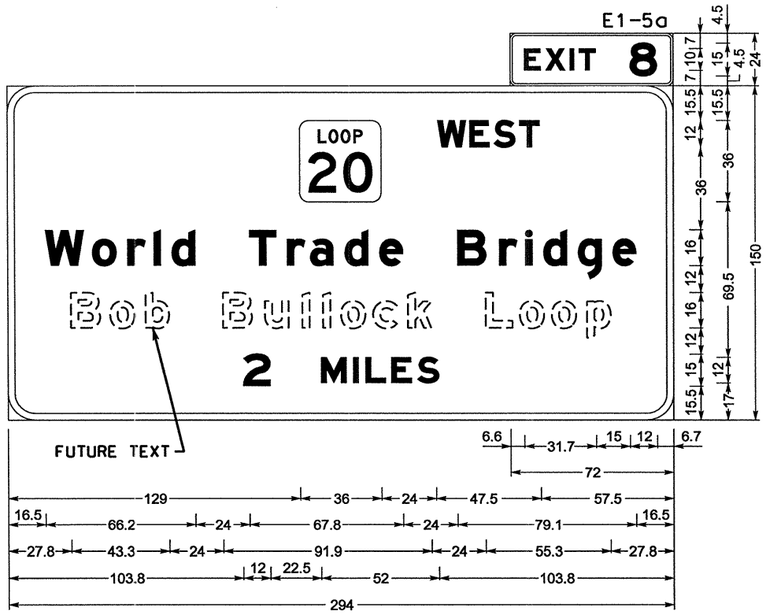

3.0" Radius, 1.0" Border, White on Green;
"EXIT 8" E Mod;
12.0" Radius, 3.0" Border, White on Green;
State Highway 20 M1-6L2B; "World Trade Bridge" E Mod; "Bob Bullock Loop" E Mod; "2 MILES" E Mod;

SIGN R-1

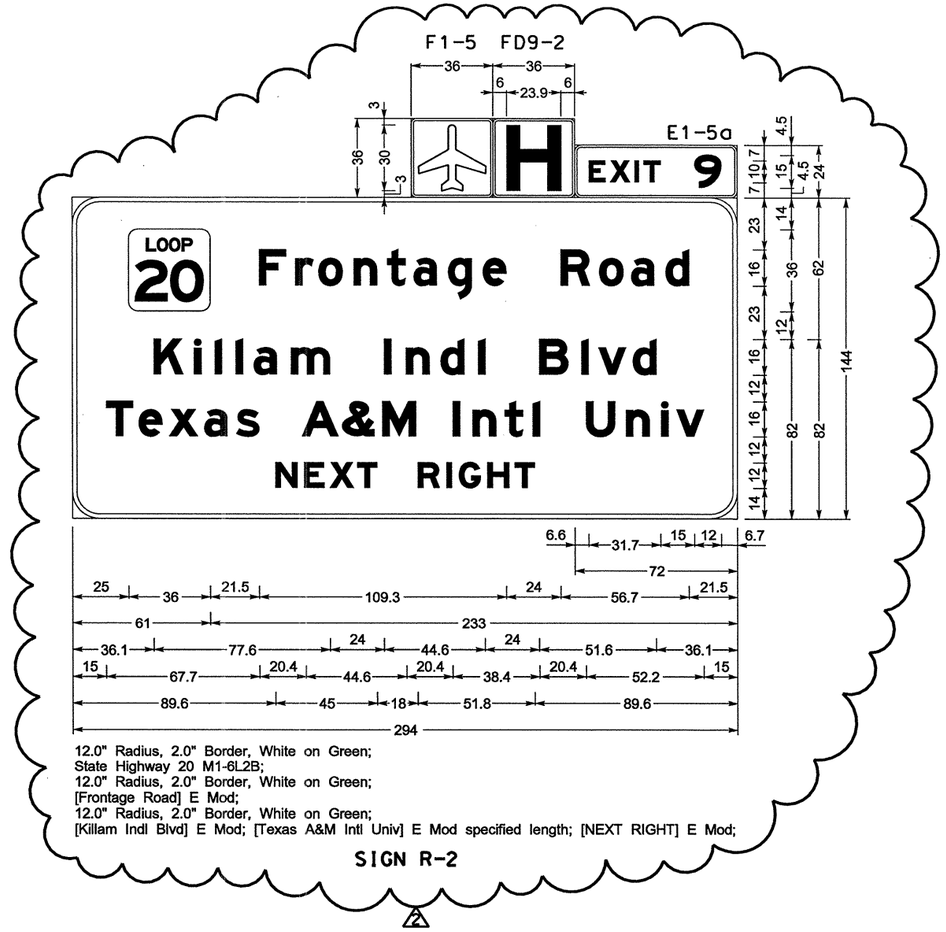

12.0" Radius, 2.0" Border, White on Green;
State Highway 20 M1-6L2B;
12.0" Radius, 2.0" Border, White on Green;
[Frontage Road] E Mod;
12.0" Radius, 2.0" Border, White on Green;
[Killam Indl Blvd] E Mod; [Texas A&M Intl Univ] E Mod specified length; [NEXT RIGHT] E Mod;

SIGN R-2

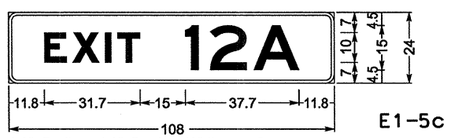

E1-5c

3.0" Radius, 1.0" Border, White on Green;
[EXIT 12A] E Mod;

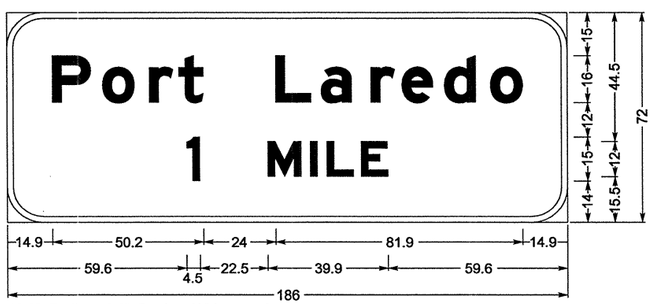

12.0" Radius, 2.0" Border, White on Green;
[Port Laredo] E Mod; [1 MILE] E Mod;

SIGN R-3

DATE	BY	REV	REVISION
11/30/04	AA	2	ADD AUXILIARY LANE

STATE OF TEXAS
SIDNEY S. AFONSO
PE 88055
REGISTERED PROFESSIONAL ENGINEER

THE SEAL APPEARING ON THIS DOCUMENT WAS AUTHORIZED BY SIDNEY S. AFONSO PE 88055, ON FEBRUARY 10, 2005

KBR
Engineered by KBR Technical Services, Inc

©2004 Texas Department of Transportation

IH 35
LOOP 20 TO UNIROYAL ROAD

LARGE SIGNS DETAILS

SHEET 8 OF 8

FED RD DIV NO	FEDERAL AID PROJECT NO		SHEET NO
6	NH-2002 (79)		823
STATE	STATE DIST		COUNTY
TEXAS	LAREDO		WEBB
CONT	SECT	JOB	HIGHWAY NO
0018	05	062, ETC	IH 35

REF FILE(S): j011op01.bdr, bdr LV ON = 50,57,58,60-62

b21smp08.dgn-04 HOUFILE023 \hcivil\cf0130\ 2/10/2005

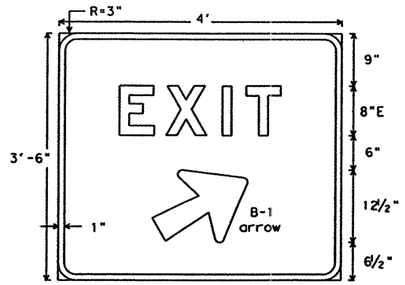

E5-1a
48" X 42"

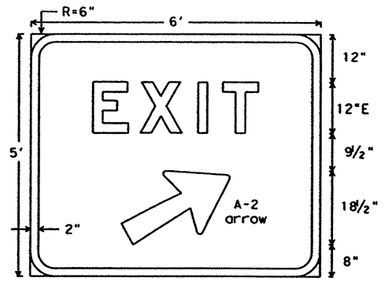

E5-1
72" X 60"

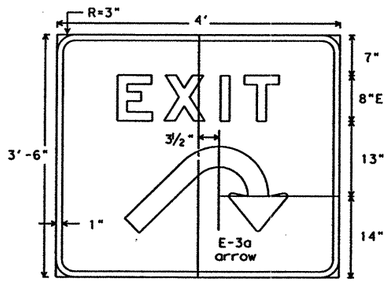

E5-3a
48" X 42"

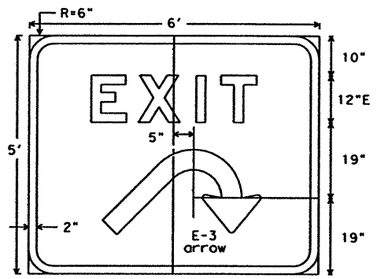

E5-3
72" X 60"

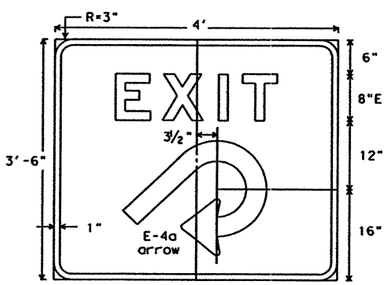

E5-4a
48" X 42"

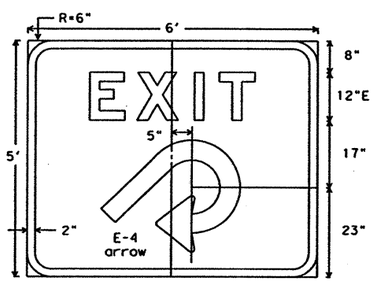

E5-4
72" X 60"

Legend - White Reflective
Border - White Reflective
Background - Green Reflective

EXIT GORE SIGNS

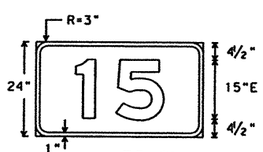

1 & 2 Digit

E5-2b
42" X 24"

Legend - White Reflective
Border - White Reflective
Background - Green Reflective

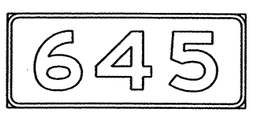

E5-2c
60" X 24"

3 Digit

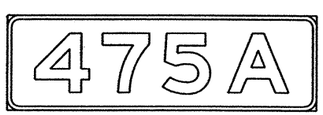

E5-2d
78" X 24"

4 Digit

EXIT NUMBER PANELS

MILEPOST MARKER

Legend - White Reflective
Border - White Reflective
Background - Green Reflective

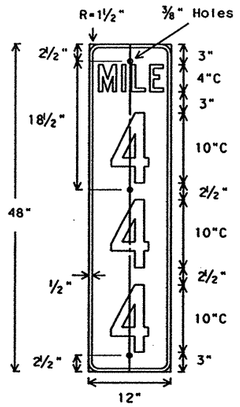

D10-6
12" X 48"

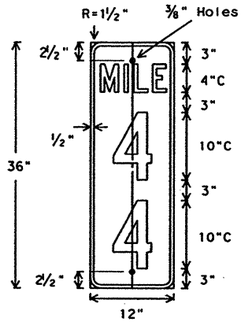

D10-5
12" X 36"

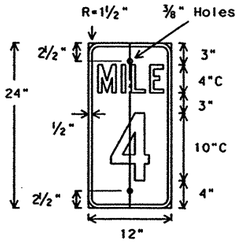

D10-4
12" X 24"

TYPE MW
(WINGED CHANNEL)

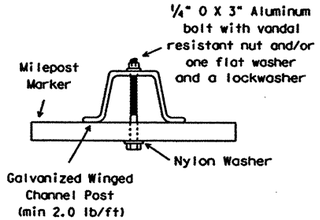

TYPE MP
(POST)

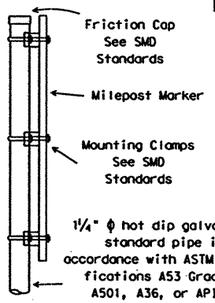

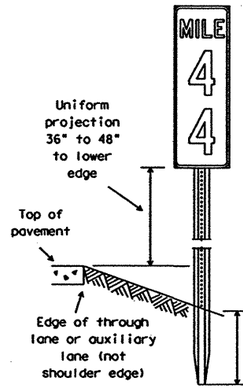

EXIT GORE SIGN
TYPICAL ASSEMBLY

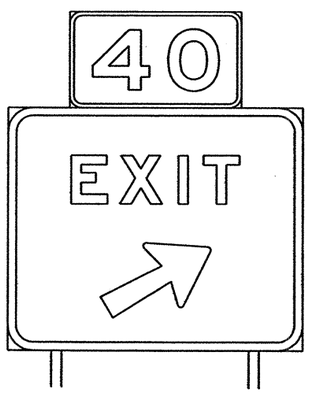

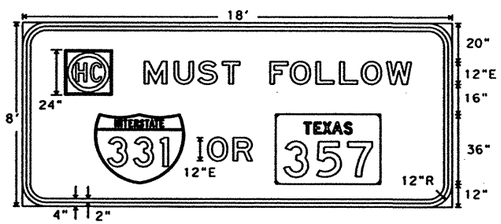

R14-6
18' X 8' (min.)

Legend - Black
Border - Black
Background - White Reflective
Shields - See R, IE and IM Standards for details

SPECIFICATION REFERANCE TABLE	
MATERIALS AND TESTS DIVISION SPECIFICATIONS	
PLYWOOD SIGN BLANKS	D-9-7100
ALUMINUM SIGN BLANKS	D-9-7110
REFLECTIVE SHEETING, TYPE A (ENGINEER GRADE)	D-9-8300
REFLECTIVE SHEETING, TYPE C (HIGH SPECIFIC ITENSITY)	D-9-8300
VINYL NON-REFLECTIVE DECAL SHEETING	D-9-8320

COLOR	USAGE	REFLECTIVE SHEETING OR OTHER MATERIAL
BLUE	BACKGROUND	TYPE C (HIGH SPECIFIC INTENSITY)
BROWN	BACKGROUND	TYPE C (HIGH SPECIFIC INTENSITY)
GREEN	BACKGROUND	TYPE C (HIGH SPECIFIC INTENSITY)
ORANGE	BACKGROUND	TYPE C (HIGH SPECIFIC INTENSITY)
WHITE	BACKGROUND	TYPE A (ENGINEER GRADE)
YELLOW	BACKGROUND	TYPE C (HIGH SPECIFIC INTENSITY)
BLACK	LEGEND & BORDERS	VINYL NON-REFLECTIVE DECAL SHEETING
WHITE	LEGEND & BORDERS	TYPE C (HIGH SPECIFIC INTENSITY)

GENERAL NOTES:

The alphabets and lateral spacing between letters and numerals shall conform with the Texas "Manual on Uniform Traffic Control Devices for Streets and Highways", latest edition, and any approved changes thereto. Lateral spacing of text shall provide a balanced appearance. All materials shall conform to Department Specifications.

Legend (except for sign R14-6), shall be applied by reverse screening process with transparent colored ink, cut-out white reflective sheeting applied to colored background or combination thereof. Background shall be reflective sheeting (Type C).

Sign blanks for roadside mounted guide signs shall be 5/8 inch thick plywood (Type A), unless otherwise noted elsewhere in the plans. Dimensions shown for borders and corner radii are nominal. Borders may vary in width as much as 1/2 inch. Corner radii above 3 inches may vary in radius plus or minus 1 inch. Borders and corner radii must be of matching widths. The sign area outside the corner radius need not be trimmed or rounded. Panels attached above or below a parent sign shall be made of the same material as the parent sign. D10 Milepost Markers shall be one piece 0.08 inch thick sheet aluminum alloy (Type A).

Mounting details for roadside mounted guide signs are shown on Standard Plan Sheets SMD series, mounting details for over head signs shall be as detailed elsewhere in the plans or the supplier's choice subject to approval by the Engineer.

Individual panel sizes may be adjusted during plan preparation to fit actual parnet sign sizes where necessary. Panel sizes to be furnished should be as detailed elsewhere in the plans and/or as shown on sign tabulation sheet. See Standard Plan Sheet IM series for arrow details.

R14-6 HAZARDOUS CARGO ROUTING SIGN

Legend of parent sign shall be black cut-out vinyl non-reflective decal sheeting. Background shall be white reflective sheeting (Type A). Shield details are shown on Standard Plan Sheets R and IM series.

Parent sign blank shall be 5/8 inch thick plywood (Type A). Shields shall be one piece 0.063 inch thick sheet aluminum alloy (Type A).

Attachment of shields to parent sign is as detailed on Standard Plan Sheet IM(2).

STANDARD PLANS
TEXAS DEPARTMENT OF TRANSPORTATION
Traffic Operations Division

EXIT GORE AND MILEPOST SIGNS

IE(1)-95

©TxDOT July 1990

DN: LR	CK: -	DW: DN	CK: -	NEG NO.:

REVISIONS
9-93
8-95

STATE DISTRICT	FEDERAL REGION	FEDERAL AID PROJECT	SHEET
22	6	NH-2002 (79)	824

COUNTY	CONTROL	SECT	JOB	HIGHWAY
WEBB	0018	05	062, ETC	IH 35

b34mop86.dgn-01 HOUFILE023 \hcivil\cf0130\ 4/18/2003

LEVELS 0
DATE:
ACC: d58hplc/usr/d580504
FILE:
DN: LR
CK: CW
DW: DN
CK: MT

OVERHEAD GUIDE SIGN ROUTING PLAQUES

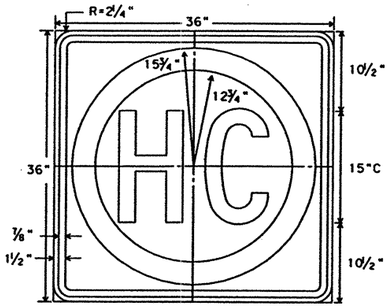

ER14-2
36" X 36"

Letters - Black
Border - Black
Ring - Green Reflective
Background - White Reflective

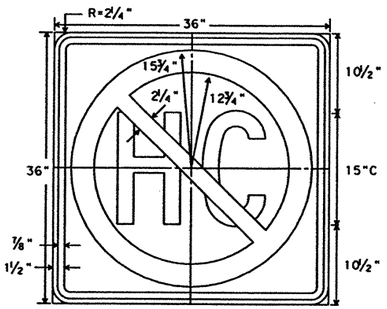

ER14-3
36" X 36"

Letters - Black
Border - Black
Ring/Slash - Red Reflective
Background - White Reflective

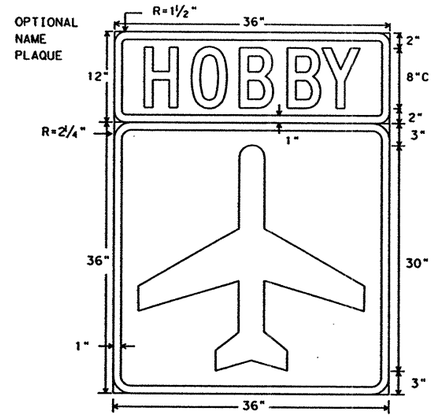

FI-5
36" X 36"

Symbol - White Reflective
Border - White Reflective
Background - Green Reflective

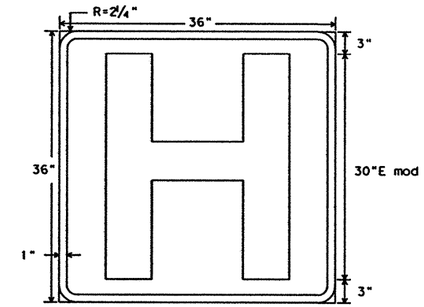

FD9-2
36" X 36"

Symbol - White Reflective
Border - White Reflective
Background - Blue Reflective

OVERHEAD GUIDE SIGN TYPICAL ASSEMBLY

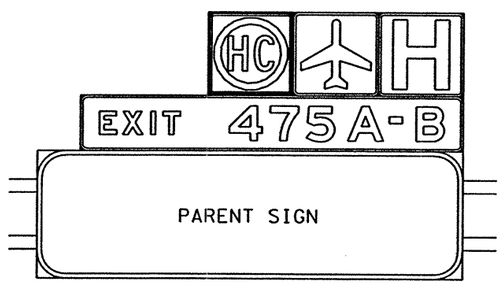

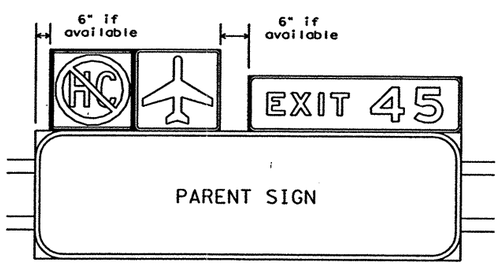

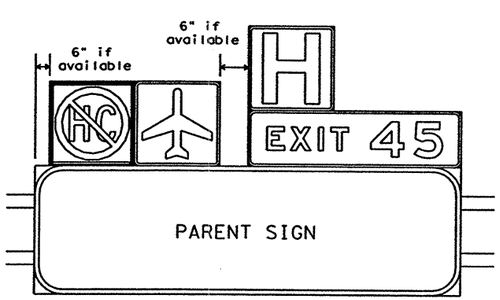

GUIDE SIGN NUMBER PANELS

STANDARD

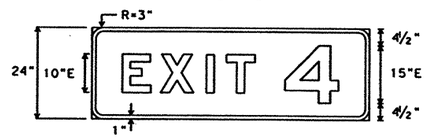

1 Digit

E1-5a
72" X 24"

2 Digit

E1-5b
90" X 24"

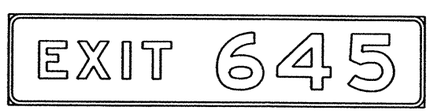

3 Digit

E1-5c
108" X 24"

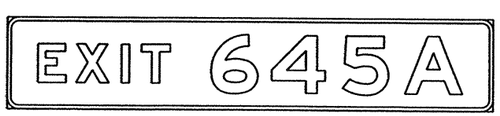

4 Digit

E1-5d
126" X 24"

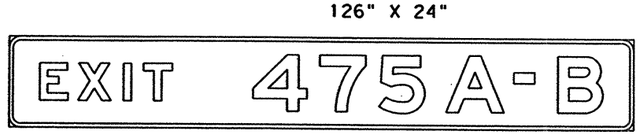

5 Digit

Legend - White Reflective
Border - White Reflective
Background - Same Color as Parent Sign
See details elsewhere in plans.

E1-5e
165" X 24"

ALTERNATE *

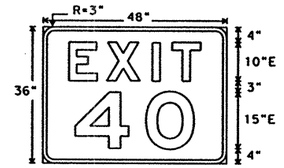

* Alternate design to be used only when Standard Guide Sign Number Panel width exceeds parent Sign width.

E1-5a-alt
48" X 36"

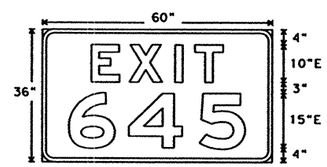

E1-5c-alt
60" X 36"

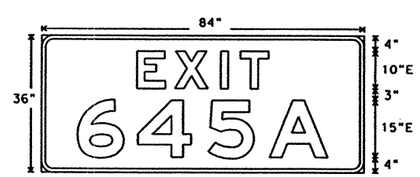

E1-5d-alt
84" X 36"

E1-5e-alt
102" X 36"

SPECIFICATION REFERENCE TABLE	
MATERIALS AND TESTS DIVISION SPECIFICATIONS	
PLYWOOD SIGN BLANKS	D-9-7100
ALUMINUM SIGN BLANKS	D-9-7110
REFLECTIVE SHEETING, TYPE C (HIGH SPECIFIC ITENSITY)	D-9-8300
VINYL NON-REFLECTIVE DECAL SHEETING	D-9-8320

COLOR	USAGE	REFLECTIVE SHEETING OR OTHER MATERIAL
BLUE	BACKGROUND	TYPE C (HIGH SPECIFIC INTENSITY)
GREEN	BACKGROUND	TYPE C (HIGH SPECIFIC INTENSITY)
WHITE	BACKGROUND	TYPE C (HIGH SPECIFIC INTENSITY)
BLACK	LEGEND & BORDERS	VINYL NON-REFLECTIVE DECAL SHEETING
WHITE	LEGEND & BORDERS	TYPE C (HIGH SPECIFIC INTENSITY)

GENERAL NOTES:

The alphabets and lateral spacing between letters and numerals shall conform with the Texas "Manual on Uniform Traffic Control Devices for Streets and Highways", latest edition, and any approved changes thereto. Lateral spacing of text shall provide a balanced appearance. All materials shall conform to Department Specifications.

Legend for guide sign number panels shall be applied by reverse screening process with transparent colored ink, cut-out white reflective sheeting applied to colored background or combination thereof. Background shall be reflective sheeting (Type C).

Sign blanks for roadside mounted guide signs shall be 5/8 inch thick plywood (Type A), unless otherwise noted elsewhere in the plans. Dimensions shown for borders and corner radii are nominal. Borders may vary in width as much as 1/2 inch. Corner radii above 3 inches may vary in radius plus or minus 1 inch. Borders and corner radii must be of matching widths. The sign area outside the corner radius need not be trimmed or rounded. Panels attached above or below a parent sign shall be made of the same material as the parent sign.

Mounting details for roadside mounted guide signs are shown on Standard Plan Sheets SMD series, mounting details for over head signs shall be as detailed elsewhere in the plans or the supplier's choice subject to approval by the Engineer.

Individual panel sizes may be adjusted during plan preparation to fit actual parnet sign sizes where necessary. Panel sizes to be furnished should be as detailed elsewhere in the plans and/or as shown on sign tabulation sheet.

GUIDE SIGN ROUTING PLAQUES

Legend for ER14-2 and ER14-3 shall be applied by screening process of black and/or transparent colored ink, cut-out vinyl non-reflective decal sheeting and/or reflective sheeting or combination thereof. Legend for F1-5, FD9-2 and optional name plaque shall be applied by reverse screening process with transparent colored ink, cut-out white reflective sheeting applied to colored background or combination thereof. Background shall be reflective sheeting (Type C).

Sign blanks shall be one piece 0.10 inch thick sheet aluminum alloy (Type A).

The priority of overhead Guide Sign Routing Plaques shall be (left to right) Hazardous Cargo, Airport then Hospital.

DISCLAIMER
The use of this standard is governed by the "Texas Engineering Practice Act". No warranty of any kind is made by TxDOT for any purpose whatsoever. TxDOT assumes no responsibility for the conversion of this standard to other formats or for incorrect results or damages resulting from its use.

DN: LR
CK: CW
DW: DN
CK: MT

LEVELS DISPLAYED
1 2 3 4 5 6 7 8 9 10 11 12 13 14 15 16
17 18 19 20 21 22 23 24 25 26 27 28 29 30 31 32
33 34 35 36 37 38 39 40 41 42 43 44 45 46 47 48
99 50 51 52 53 54 55 56 57 58 59 60 61 62 63

DATE:
ACC: d58hplc/usr/d580504
FILE:

STANDARD PLANS
TEXAS DEPARTMENT OF TRANSPORTATION
Traffic Operations Division

GUIDE SIGN ATTACHMENTS SERVICES / EXIT PANELS

IE(2)-95

©TxDOT July 1972

DN-LR	CK:-	DW-DN	CK:-	MSG NO.:

REVISIONS
9-93
12-94
8-95

STATE DISTRICT	FEDERAL REGION	FEDERAL AID PROJECT	SHEET
22	6	NH-2002 (79)	825

COUNTY	CONTROL	SECT	JOB	HIGHWAY
WEBB	0018	05	062, ETC	IH 35

4/18/2003
HOUFILE023 \hcivil\cf0130\
b34mop87.dgn-01

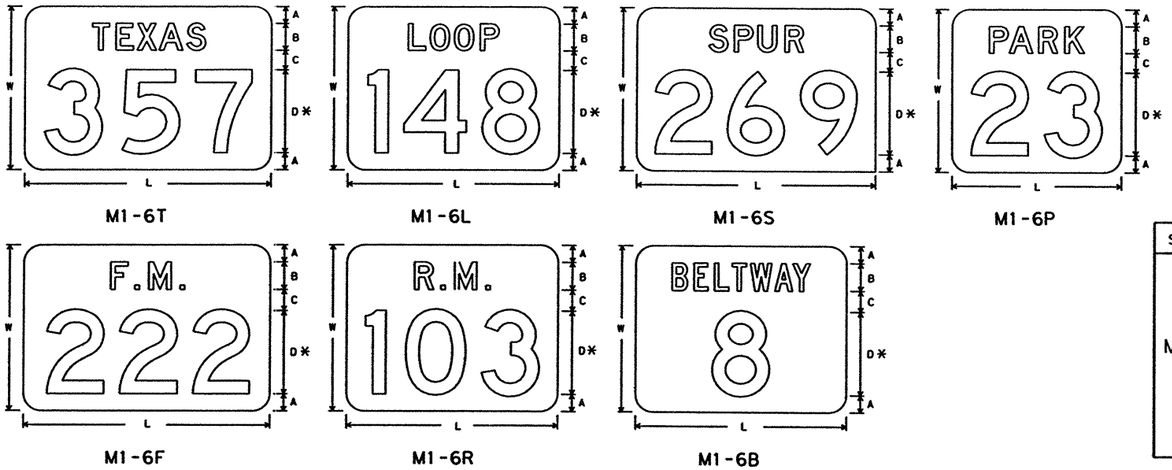

* IN A FEW CASES NUMERALS CANNOT BE ACCOMMODATED WITHIN THE SPACE AVAILABLE. FOR THESE CASES, THE STANDARD SERIES D MAY BE REDUCED TO SERIES C, OR AS A SECOND CHOICE REDUCED TO THE NEXT SMALLER HEIGHT COMMONLY AVAILABLE.

SIGN TYPES		NO. OF DIGITS	W	A	B	C	D
M1-6 T	4A	4	24"	2½"	4"	3"	12"
	3A	3					
	2A	2					
	1A	1					
M1-6 L S P F R B	4B	4	36"	4"	6"	4"	18"
	3B	3					
	2B	2					
	1B	1					
	4C	4	48"	5"	8"	6"	24"
	3C	3					
	2C	2					
	1C	1					

Letters - Black
Numerals - Black
Background - White Reflective

RADIUS FOR CORNERS IS 3" TYPICAL
L: VARIABLE WITH THE NUMBER OF DIGITS; HOWEVER, TOTAL MARKER LENGTH SHALL BE ADJUSTED TO NEAREST 1 INCH MULTIPLE.

M1-6 STATE ROUTE MARKERS FOR GUIDE SIGN USE

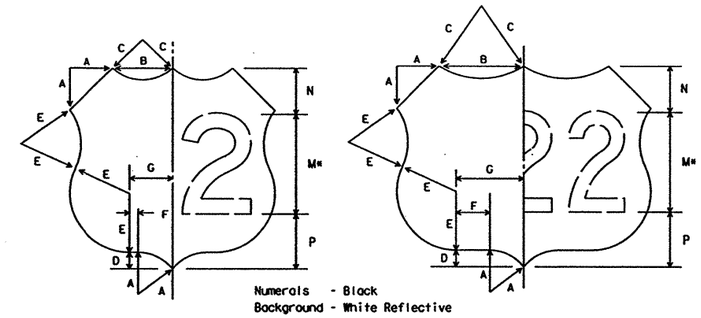

Numerals - Black
Background - White Reflective

		SIZE	A	B	C	D	E	F	G	M*	N	P	AREA
MI-4D2	12" NUMERALS 2 DIGIT	24x24	5	7	5	2	7	1	5	12D	5½	6½	3.18
MI-4D3	12" NUMERALS 3 DIGIT	30x24	5	10	9	2	7	4	8	12D	5½	6½	4.05
MI-4E2	18" NUMERALS 2 DIGIT	36x36	7½	10½	7½	3	10½	1½	7½	18D	8¼	9¾	7.15
MI-4E3	18" NUMERALS 3 DIGIT	45x36	7½	15	13½	3	10½	6	12	18D	8¼	9¾	9.11
MI-4F2	24" NUMERALS 2 DIGIT	48x48	10	14	10	4	14	2	10	24D	11	13	12.70
MI-4F3	24" NUMERALS 3 DIGIT	60x48	10	20	18	4	14	8	16	24D	11	13	16.20

ALL LENGTHS SHOWN ARE IN INCHES, ALL AREAS ARE IN SQUARE FEET.

NOTES:

1. DIMENSIONS FOR THE U.S. ROUTE MARKER OUTLINES ARE SCALE DIMENSIONS AND MAY BE ADJUSTED SLIGHTLY WHERE NECESSARY FOR CLOSURE OF THE OUTLINES.
2. * IN A FEW CASES NUMERALS CANNOT BE ACCOMMODATED WITHIN THE SPACE AVAILABLE. FOR THESE CASES, THE STANDARD SERIES D MAY BE REDUCED TO SERIES C, OR AS A SECOND CHOICE REDUCE TO THE NEXT SMALLER HEIGHT COMMONLY AVAILABLE.

U.S. ROUTE MARKERS FOR GUIDE SIGN USE

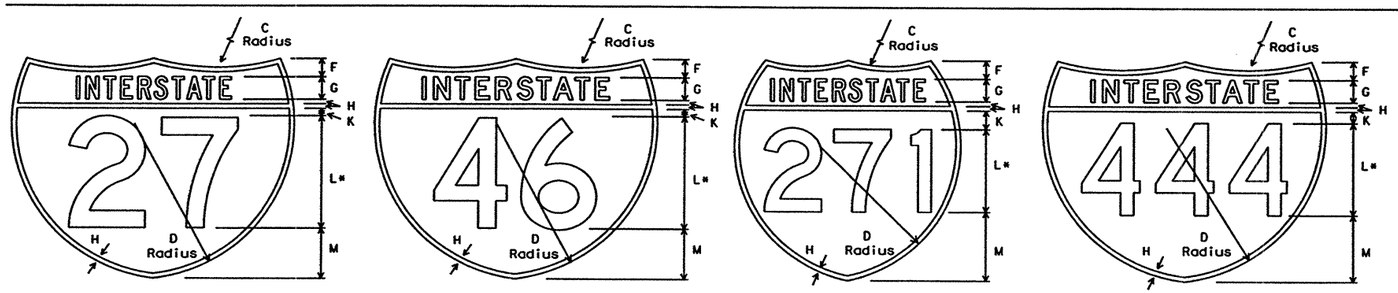

Letters	- White Reflective
Numerals	- White Reflective
Border	- White Reflective
Background (Upper Portion)	- Red Reflective
Background (Lower Portion)	- Blue Reflective

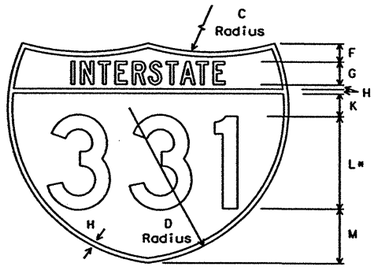

M1-1C3-S
45" X 36"

Letters	- White Reflective
Numerals	- White Reflective
Border	- White Reflective
Background (Upper Portion)	- Red Reflective
Background (Lower Portion)	- Blue Reflective

SPECIFICATION REFERENCE TABLE
MATERIALS AND TESTS DIVISION SPECIFICATIONS

ALUMINUM SIGN BLANKS	D-9-7110
REFLECTIVE SHEETING, TYPE C (HIGH SPECIFIC INTENSITY)	D-9-8300
VINYL NON-REFLECTIVE DECAL SHEETING	D-9-8320

GENERAL NOTES:

The Alphabets and lateral spacing between letters and numerals shall conform with the Texas "Manual on Uniform Traffic Control Devices for Streets and Highways", latest edition, and any approved changes thereto. Lateral spacing of text shall provide a balanced appearance. All materials shall conform to Department Specifications.

Legend for State route markers shall be black and applied by screening process, cut-out vinyl non-reflective decal sheeting or combination thereof. Legend for U.S. route markers shall be applied by reverse screening process, cut-out black vinyl non-reflective decal sheeting or combination thereof. Legend for Interstate route markers shall be applied by reverse screening process with transparent colored ink, cut-out white reflective sheeting applied to colored background or combination thereof. Background shall be reflective sheeting (Type C).

Sign blanks shall be one piece 0.063 inch thick sheet aluminum alloy (Type A), unless otherwise noted elsewhere in the plans.

Route Markers shall be attached to guide signs as detailed on Standard Plan Sheet IM (2).

		SIZE	C	D	F	G	H	K	L*	M	N	AREA
INTERSTATE	MI-IC2 18" NUMERALS 2 DIGIT	45x36	36	25½	3	3¾C	¾	1½	18D	8¼	-	9.41
	MI-ID2 24" NUMERALS 2 DIGIT	60x48	48	34	4	5D	1	2	24D	11	-	16.74
	MI-IC3-S 15" NUMERALS 3 DIGIT	45x36	36	25½	3	3¾C	¾	3¾	15D	9	-	9.41
	MI-IC3 18" NUMERALS 3 DIGIT	48x48	30	30	4	5C	1	4	18D	15	-	12.76
	MI-ID3 20" NUMERALS 3 DIGIT	60x48	48	34	4	5D	1	2½	20D	14½	-	16.74
BUSINESS LOOP	MI-2C2 15" NUMERALS 2 DIGIT	36x36	22½	22½	3	3¾C	¾	¾	15D	9	2¼D	7.18
	MI-2D2 20" NUMERALS 2 DIGIT	48x48	30	30	4	5C	1	1	20D	12	3D	12.76
BUSINESS SPUR	MI-3C2 15" NUMERALS 2 DIGIT	36x36	22½	22½	3	3¾C	¾	¾	15D	9	2¼D	7.18
	MI-3D2 20" NUMERALS 2 DIGIT	48x48	30	30	4	5C	1	1	20D	12	3D	12.76

ALL LENGTHS SHOWN ARE IN INCHES, ALL AREAS ARE IN SQUARE FEET.

△ M1-1C3-S IS FOR USE ON SEQUENCE SIGNS ONLY.

* IN A FEW CASES NUMERALS CANNOT BE ACCOMMODATED WITHIN THE SPACE AVAILABLE. FOR THESE CASES, THE STANDARD SERIES D MAY BE REDUCED TO SERIES C, OR AS A SECOND CHOICE REDUCED TO THE NEXT SMALLER HEIGHT COMMONLY AVAILABLE.

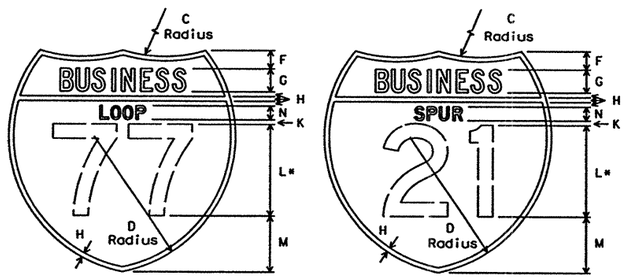

M1-2C2 36" X 36" M1-2D2 48" X 48"

Letters	- White Reflective
Numerals	- White Reflective
Border	- White Reflective
Background	- Green Reflective

M1-3C2 36" X 36" M1-3D2 48" X 48"

Letters	- White Reflective
Numerals	- White Reflective
Border	- White Reflective
Background	- Green Reflective

INTERSTATE ROUTE MARKERS FOR GUIDE SIGN USE

STANDARD PLANS
TEXAS DEPARTMENT OF TRANSPORTATION
Traffic Operations Division

INTERSTATE, U.S. & STATE ROUTE MARKERS FOR ATTACHMENT TO GUIDE SIGNS

IM(1)-95

©TxDOT July 1972

DN: LR/MT	CK: -	DW: DN	CK: -	NEC NO.:

REVISIONS
1-85 8-95
7-90
9-93
12-94

STATE DISTRICT	FEDERAL REGION	FEDERAL AID PROJECT	SHEET
22	6	NH-2002 (79)	826

COUNTY	CONTROL	SECT	JOB	HIGHWAY
WEBB	0018	05	062, ETC	IH 35

DN: LR
CK: CW
DW: DN
CK: MT

DATE:
ACC: d58hplc/usr/d580504
FILE:

LEVELS

b34mop88.dgn-01 HOUFILE023 \hcivil\cf0130\ 4/18/2003

TYPICAL ATTACHMENT OF ROUTE MARKERS AND "EXIT ONLY" PANELS TO GUIDE SIGNS

SCREW ATTACHMENT

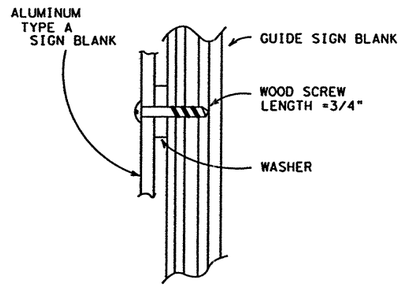

PLYWOOD GUIDE SIGN
(5/8" PLYWOOD)

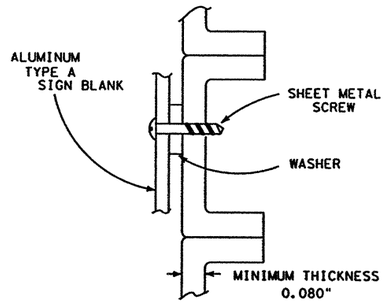

ALUMINUM GUIDE SIGNS
(EXTRUDED ALUMINUM PANELS)

NUT/BOLT ATTACHMENT

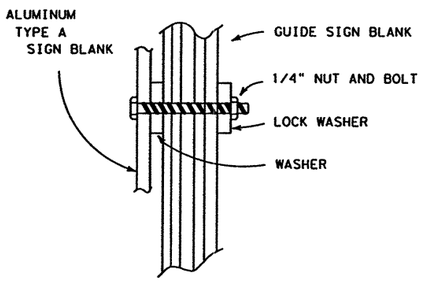

PLYWOOD GUIDE SIGN
(5/8" PLYWOOD)

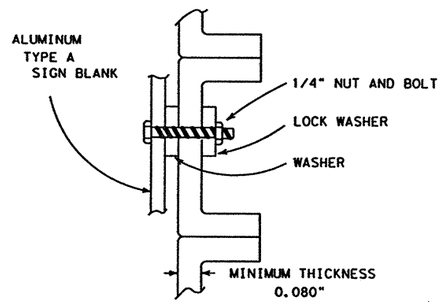

ALUMINUM GUIDE SIGNS
(EXTRUDED ALUMINUM PANELS)

SIGN BLANK PUNCHING DETAILS FOR ROUTE MARKERS WHEN ATTACHED TO GUIDE SIGN

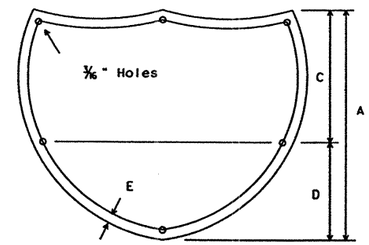

INTERSTATE ROUTE MARKERS

A	C	D	E
36	21	15	1 1/2
48	28	20	1 3/4

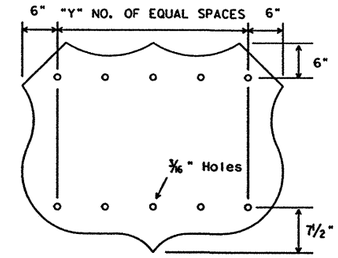

U.S. ROUTE MARKERS

Sign Type	"Y"
MI-4D2	2
MI-4D3	3
MI-4E2	3
MI-4E3	4
MI-4F2	4
MI-4F3	5

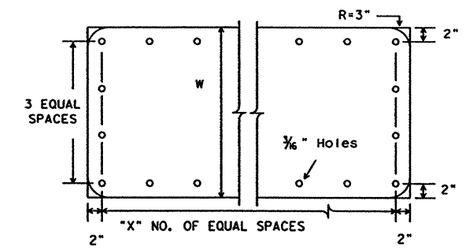

STATE ROUTE MARKERS

No. of Digits	W	X
4	24	4
4	36	5
4	48	6
3	24	3
3	36	4
3	48	5

ARROW DIMENSION DETAILS

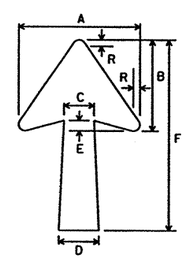

Type A or Type B

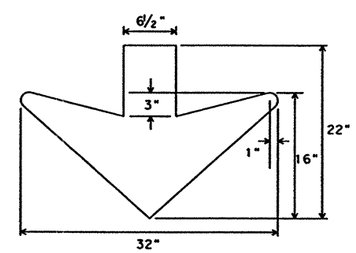

Type C

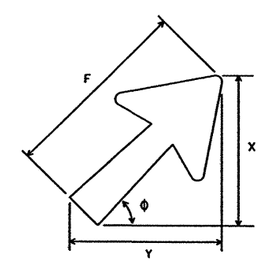

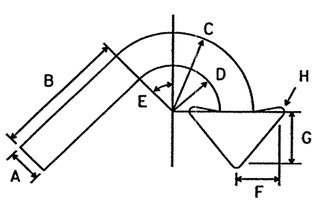

E3 and E3a

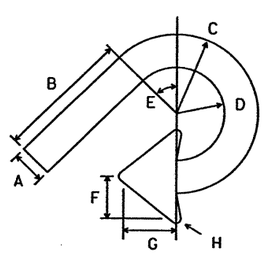

E4 and E4a

CODE	USED ON SIGN NO.	A	B	C	D	E	F	G	H
E-3 & E-4	E5-3 and E5-4	5	20	12	7	45o	6 1/2	8	3/4
E-3a & E-4a	E5-3a and E5-4a	3 1/2	14	8 1/2	5	45o	4 1/2	5 1/2	1/2

		ARROW DIMENSIONS IN INCHES												
									ϕ = 30°		ϕ = 45°		ϕ = 60°	
CODE	LETTER SIZE	A	B	C	D*	E	F*	R	X	Y	X	Y	X	Y
A-1	8" Caps	15 1/8	11 9/16	3 3/4	5	1 5/16	24 1/4	13/16	15 1/2	22 3/8	19 1/8	19 1/8	22 3/8	15 1/2
A-2	13 1/3" U.C., 10-12" Caps	18 1/4	14	4 1/2	6	1 1/2	29 1/4	3/4	18 1/2	27	23	23	27	18 1/2
A-3	16" U.C.	22 1/4	17	5 3/8	7 1/8	1 3/4	35 5/8	1	22 5/8	32 3/4	28	28	32 3/4	22 5/8
B-1	8-10" Caps	14 1/4	9 13/16	3 3/8	4 1/2	1 5/16	17 1/4	3/4	12 1/2	16 1/8	14	14	16 1/8	12 1/2
B-2	13 1/3" U.C., 12" Caps	17 1/2	11 3/4	4 3/8	5 5/8	1 1/2	20 1/4	7/8	15 3/8	19 1/16	16 1/2	16 1/2	19 1/16	15 3/8
B-3	16" U.C.	21 7/8	14 1/4	5	6 3/4	1 3/4	25	1	19 1/8	23 1/2	20 3/8	20 3/8	23 1/2	19 1/8

WHERE AN ARROW IS REQUIRED ON A GUIDE SIGN WHICH HAS A HEIGHT OF 24" AND WHICH IS USUALLY ERECTED ON RAMPS AND CROSSROADS AT INTERCHANGES, THE ARROW SHALL BE TYPE B-1.

* RECOMMENDED DIMENSIONS: TAPER SHOULD BE HELD CONSTANT FOR LONGER OR SHORTER SHAFT LENGTHS.

SPECIFICATION REFERENCE TABLE
MATERIALS AND TEST SPECIFICATIONS (D-9)

ALUMINUM SIGN BLANKS	D-9-7110
SIGN HARDWARE	D-9-7120
FLAT SURFACE REFLECTIVE SHEETING, TYPE C (HIGH SPECIFIC INTENSITY)	D-9-8300

GENERAL NOTES:

Route markers attached to guide signs shall be one piece sheet aluminum alloy conforming with Department Specification "Aluminum Signs (Type A)." Sketches shown are examples only.

Screws and washers shall be used unless otherwise noted in the plans. Screws or bolts, nuts and washers shall be stainless steel or aluminum.

Screws for plywood signs shall not protrude through the back of the sign. All holes required in the punching detail of blank, shall have screws or nuts and bolts.

Arrows shall be cut-out reflective sheeting (Type C) applied directly to sign background, or reflective sheeting (Type C) applied to one piece 0.063 inch thick sheet aluminum alloy conforming with Department Specification "Aluminum Signs (Type A)." Attachment to of arrows applied to sheet aluminum alloy shall be as illustrated for sign blanks.

STANDARD PLANS
TEXAS DEPARTMENT OF TRANSPORTATION
Traffic Operations Division

ARROW AND ROUTE MARKER ATTACHMENT DETAILS FOR GUIDE SIGNS

IM(2)-93

©TxDOT July 1990

DN: LR	CK: -	DW: DN	CK: -	MEG NO.:

REVISIONS
9-93

STATE DISTRICT	FEDERAL REGION	FEDERAL AID PROJECT	SHEET
22	6	NH-2002 (79)	827

COUNTY	CONTROL	SECTION	JOB	HIGHWAY
WEBB	0018	05	062, ETC	IH 35

DISCLAIMER
The use of this standard is governed by the "Texas Engineering Practice Act". No warranty of any kind is made by TxDOT for any purpose whatsoever. TxDOT assumes no responsibility for the conversion of this standard to other formats or for incorrect results or damages resulting from its use.

DATE: 4/18/2003
ACC: d58hplc/usr/d580504
FILE: HOUFILE023 \hcivil\cf0130\ b34mp117.dgn-01

DN: LR
CK: CW
DW: DN
CK: MT

LEVELS DISPLAYED
1 2 3 4 5 6 7 8 9 10 11 12 13 14 15 16
17 18 19 20 21 22 23 24 25 26 27 28 29 30 31 32
33 34 35 36 37 38 39 40 41 42 43 44 45 46 47 48
49 50 51 52 53 54 55 56 57 58 59 60 61 62 63

INTERSTATE ROUTE MARKERS FOR INDEPENDENT USE

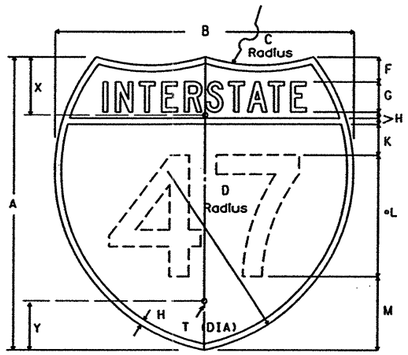

M1-1A2
24" X 24"

M1-1B2
36" X 36"

Letters - White Reflective
Numerals - White Reflective
Border - White Reflective
Background (Upper Portion) - Red Reflective
Background (Lower Portion) - Blue Reflective

	MI-1A2 10" NUMERALS 2 DIGIT	MI-1B2 15"NUMERALS 2 DIGIT
A	24	36
B	24	36
C	15	22½
D	15	22½
F	2	3
G	2½C	3¾C
H	½	¾
K	2½	3¾
•L	10D	15D
M	6	9
T	⅜	⅜
X	4¾	7⅛
Y	4	6
AREA	3.19 sq ft	7.18 sq ft

•NOTE: In a few cases numerals cannot be accommodated within the space available. For these cases, the standard series D numeral may be reduced to series C, or as a second choice to the next smaller height commonly available.

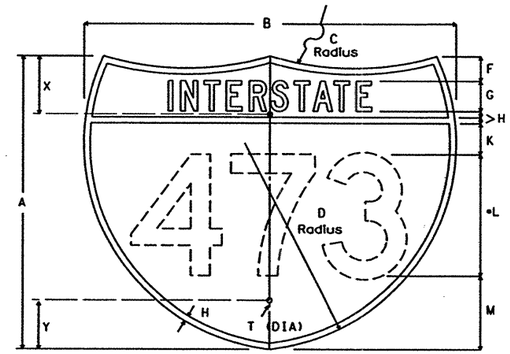

M1-1A3
30" X 24"

M1-1B3
45" X 36"

Letters - White Reflective
Numerals - White Reflective
Border - White Reflective
Background (Upper Portion) - Red Reflective
Background (Lower Portion) - Blue Reflective

NOTE: M1-1B3 SHALL BE 0.100 INCH THICK ONE PIECE SHEET ALUMINUM ALLOY CONFORMING WITH DEPARTMENT SPECIFICATION ITEM "ALUMINUM SIGNS (TYPE A)."

	MI-1A3 10" NUMERALS 3 DIGIT	MI-1B3 15"NUMERALS 3 DIGIT
A	24	36
B	30	45
C	24	36
D	17	25½
F	2	3
G	2½C	3¾C
H	½	¾
K	2½	3¾
•L	10D	15D
M	6	9
T	⅜	⅜
X	4¾	7⅛
Y	4	6
AREA	4.18 sq ft	9.41 sq ft

SPECIFICATION REFERENCE TABLE
MATERIALS AND TESTS DIVISION SPECIFICATIONS

ALUMINUM SIGN BLANKS	D-9-7110
REFLECTIVE SHEETING, TYPE C (HIGH SPECIFIC INTENSITY)	D-9-8300

GENERAL NOTES:

The alphabets and lateral spacing between letters and numerals shall conform with the Texas "Manual on Uniform Traffic Control Devices for Streets and Highways", latest edition, and any approved changes thereto. Lateral spacing of text shall provide a balanced appearance. All materials shall conform to Department Specifications.

Legend for Interstate route markers shall be applied by reverse screening process with transparent colored ink, cut-out white reflective sheeting applied to colored background or combination thereof. Background shall be reflective sheeting (Type C).

Sign blanks for 24 inch height shields shall be 0.080 inch thick and 36 inch height shields shall be 0.100 inch thick one piece sheet aluminum alloy conforming with Department Specification "Aluminum Signs (Type A)".

OFF INTERSTATE ROUTE MARKERS FOR INDEPENDENT USE

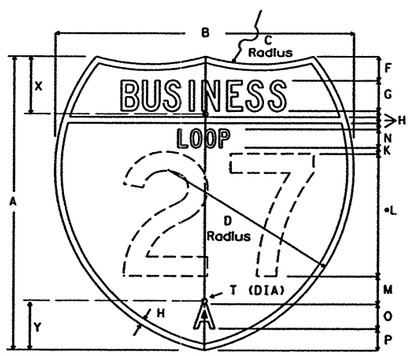

M1-2A2
24" X 24"

M1-2B2
36" X 36"

Letters - White Reflective
Numerals - White Reflective
Border - White Reflective
Background - Green Reflective

	MI-2A2 10" NUMERALS 2 DIGIT	MI-2B2 15"NUMERALS 2 DIGIT
A	24	36
B	24	36
C	15	22½
D	15	22½
F	2	3
G	2½C	3¾C
H	½	¾
K	½	¾
•L	10D	15D
M	2¼	3½
N	1½D	2¼D
O	2D	2D
P	1¾	3½
T	⅜	⅜
X	4¾	7⅛
Y	4	6
AREA	3.19 sq ft	7.18 sq ft

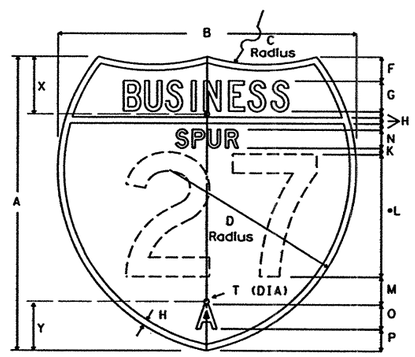

M1-3A2
24" X 24"

M1-3B2
36" X 36"

Letters - White Reflective
Numerals - White Reflective
Border - White Reflective
Background - Green Reflective

	MI-3A2 10" NUMERALS 2 DIGIT	MI-3B2 15"NUMERALS 2 DIGIT
A	24	36
B	24	36
C	15	22½
D	15	22½
F	2	3
G	2½C	3¾C
H	½	¾
K	½	¾
•L	10D	15D
M	2¼	3½
N	1½D	2¼D
O	2D	2D
P	1¾	3½
T	⅜	⅜
X	4¾	7⅛
Y	4	6
AREA	3.19	7.18

•NOTE: In a few cases numerals cannot be accommodated within the space available. For these cases, the standard series D numeral may be reduced to series C, or as a second choice to the next smaller height commonly available.

DISCLAIMER
The use of this standard is governed by the "Texas Engineering Practice Act". No warranty of any kind is made by TxDOT for any purpose whatsoever. TxDOT assumes no responsibility for the conversion of this standard to other formats or for incorrect results or damages resulting from its use.

DN: LR
CK: CW
DW: DN
CK: MT

DATE:
ACC: d58hplc/usr/d580504
FILE:

LEVELS DISPLAYED

STANDARD PLANS
TEXAS DEPARTMENT OF TRANSPORTATION
Traffic Operations Division

INTERSTATE MARKERS FOR INDEPENDENT MOUNTING

IM(3)-93

© TxDOT January 1986

DN: LR	CK: -	DW: DN	CK: -	NEG NO.:

REVISIONS	STATE DISTRICT	FEDERAL REGION	FEDERAL AID PROJECT	SHEET
9-93	22	6	NH-2002 (79)	828

COUNTY	CONTROL	SECT	JOB	HIGHWAY
WEBB	0018	05	062, ETC	IH 35

4/18/2003
HOUFILE023 \hcivil\cf0130\
b34mop89.dgn-01

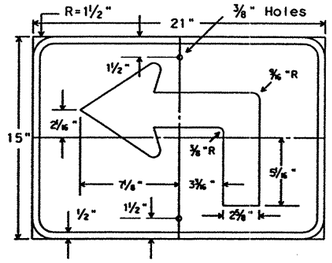

M5-1BL
M5-1BR
21" X 15"

M5-1GL
M5-1GR
21" X 15"

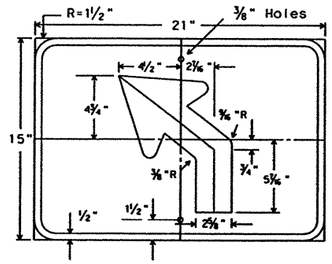

M5-2BL
M5-2BR
21" X 15"

M5-2GL
M5-2GR
21" X 15"

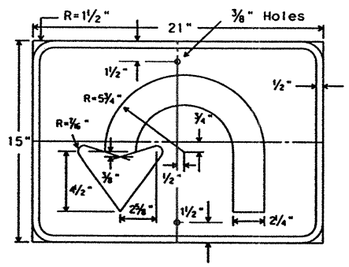

M5-3BL
21" X 15"

M5-3GL
21" X 15"

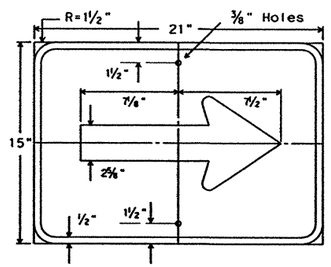

M6-1B
21" X 15"

M6-1G
21" X 15"

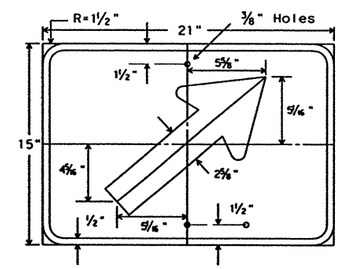

M6-2BR
M6-2BL
21" X 15"

M6-2GR
M6-2GL
21" X 15"

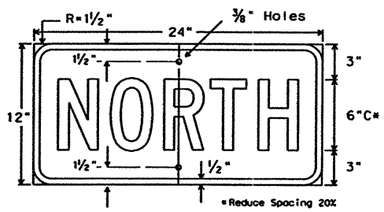

M3-1B
24" X 12"

M3-1G
24" X 12"

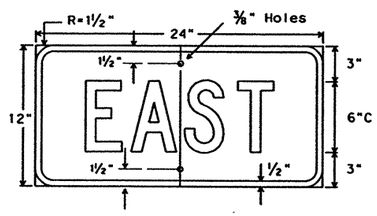

M3-2B
24" X 12"

M3-2G
24" X 12"

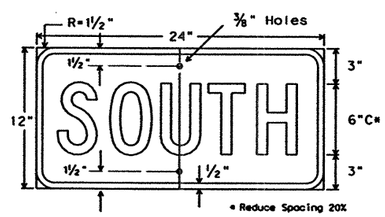

M3-3B
24" X 12"

M3-3G
24" X 12"

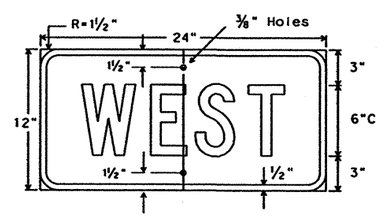

M3-4B
24" X 12"

M3-4G
24" X 12"

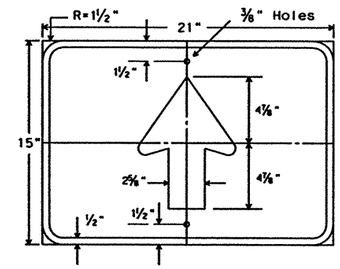

M6-3B
21" X 15"

M6-3G
21" X 15"

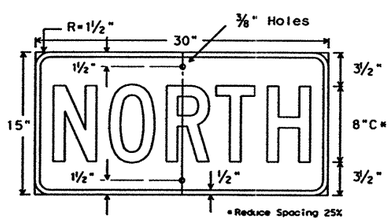

SM3-1B
30" X 15"

SM3-1G
30" X 15"

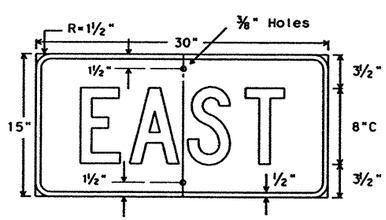

SM3-2B
30" X 15"

SM3-2G
30" X 15"

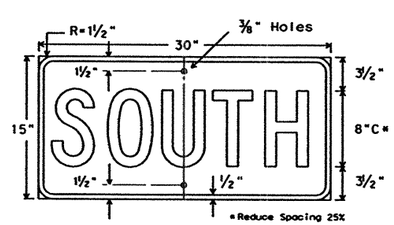

SM3-3B
30" X 15"

SM3-3G
30" X 15"

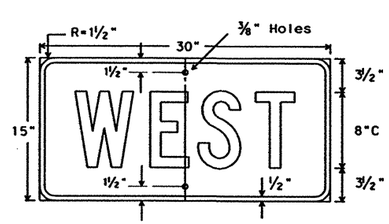

SM3-4B
30" X 15"

SM3-4G
30" X 15"

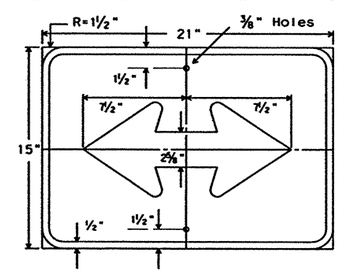

M6-4B
21" X 15"

M6-4G
21" X 15"

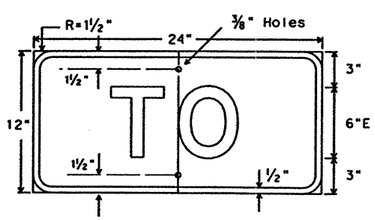

M4-5B
24" X 12"

M4-5G
24" X 12"

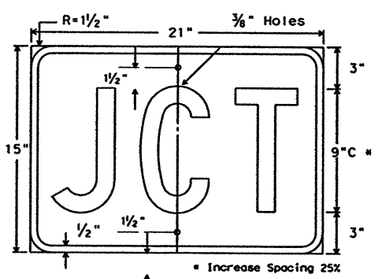

M2-1B
21" X 15"

M2-1G
21" X 15"

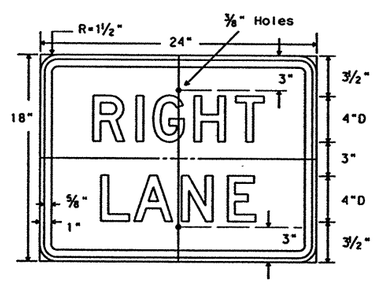

M6-8R(L)
24" X 18"

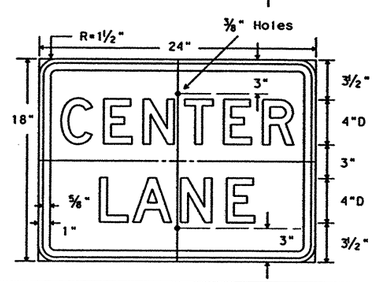

M6-8C
24" X 18"

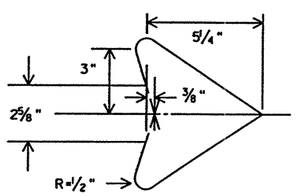

GENERAL NOTES:

The Alphabets and lateral spacing between letters and numerals shall conform with the Texas "Manual on Uniform Traffic Control Devices for Streets and Highways", latest edition, and any approved changes thereto. Lateral spacing of text shall provide a balanced appearance. All materials shall conform to Department Specifications.

Legend shall be applied by reverse screening process with transparent colored ink, cut-out white reflective sheeting applied to colored background or combination thereof. Background shall be reflective sheeting (Type C).

Sign blanks shall be one piece 0.08 inch thick sheet aluminum alloy (Type A), unless otherwise noted elsewhere in the plans.

All signs detailed on this sheet shall have white border, legend and/or symbol on a blue or green background.

SPECIFICATION REFERENCE TABLE

MATERIALS AND TESTS DIVISION SPECIFICATIONS	
ALUMINUM SIGN BLANKS	D-9-7110
REFLECTIVE SHEETING, TYPE C (HIGH SPECIFIC INTENSITY)	D-9-8300

STANDARD PLANS
TEXAS DEPARTMENT OF TRANSPORTATION
Traffic Operations Division

INTERSTATE ROUTE MARKER AUXILIARIES

IM(4)-97

©TxDOT July 1990

DN-LR	CK:-	DW-DN	CK:-	MSG NO.:

REVISIONS
9-93
4-97

STATE DISTRICT	FEDERAL REGION	FEDERAL AID PROJECT	SHEET
22	6	NH-2002 (79)	829

COUNTY	CONTROL	SECT	JOB	HIGHWAY
WEBB	0018	05	062, ETC	IH 35

DN: LR
CK: CW
DW: DN
CK: MT

DATE:
ACC: d58nplc/usr/d580504
FILE:

LEVELS
1 2 3 4 5 6 7 8 9 10 11 12 13 14 15 16
17 18 19 20 21 22 23 24 25 26 27 28 29 30 31 32
33 34 35 36 37 38 39 40 41 42 43 44 45 46 47 48
49 50 51 52 53 54 55 56 57 58 59 60 61 62 63

4/18/2003

HOUFILE023 \hcivil\cf0130\

b34mop90.dgn-01

DISCLAIMER
The use of this standard is governed by the "Texas Engineering Practice Act". No warranty of any kind is made by TxDOT for any purpose whatsoever. TxDOT assumes no responsibility for the conversion of this standard to other formats or for incorrect results or damages resulting from its use.

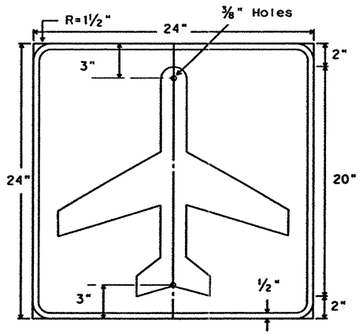

I-5
24" X 24"

Symbol - White Reflective
Border - White Reflective
Background - Green Reflective

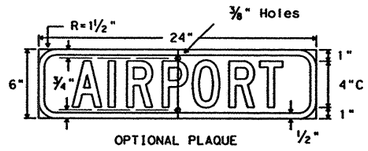

OPTIONAL PLAQUE

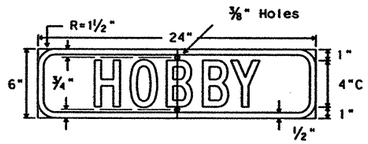

OPTIONAL AIRPORT NAME PLAQUE

Symbol - White Reflective
Border - White Reflective
Background - Green Reflective

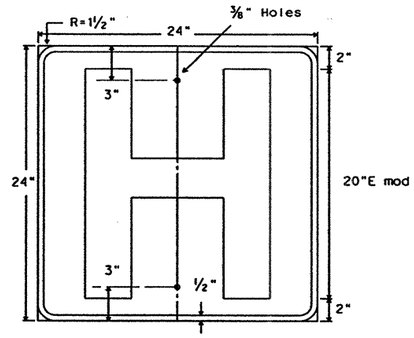

D9-2
24" X 24"

Symbol - White Reflective
Border - White Reflective
Background - Blue Reflective

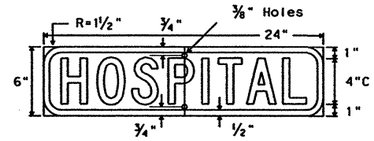

OPTIONAL PLAQUE

Symbol - White Reflective
Border - White Reflective
Background - Blue Reflective

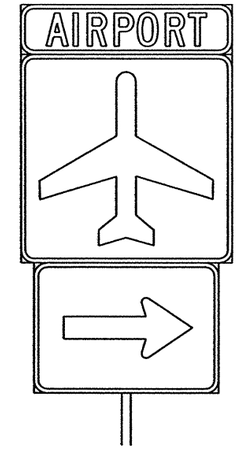

TYPICAL ASSEMBLY

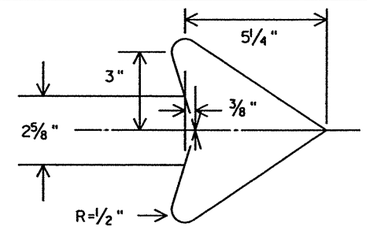

SPECIFICATION REFERENCE TABLE

MATERIALS AND TESTS DIVISION SPECIFICATIONS	
ALUMINUM SIGN BLANKS	D-9-7110
REFLECTIVE SHEETING, TYPE C (HIGH SPECIFIC INTENSITY)	D-9-8300

GENERAL NOTES:

The alphabets and lateral spacing between letters and numerals shall conform with the Texas "Manual on Uniform Traffic Control Devices for Streets and Highways", latest edition, and any approved changes thereto. Lateral spacing of text shall provide a balanced appearance. All materials shall conform to Department Specifications.

Legend shall be applied by reverse screening process with transparent colored ink, cut-out white reflective sheeting applied to colored background or combination thereof. Background shall be reflective sheeting (Type C).

Sign blanks shall be 0.080 inch thick one piece sheet aluminum alloy conforming with Department Specification "Aluminum Signs (Type A)".

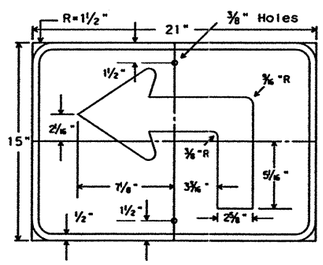

M5-1BL
M5-1BR
21" X 15"

Symbol - White Refl.
Border - White Refl.
Background - Blue Refl.

M5-1GL
M5-1GR
21" X 15"

Symbol - White Refl.
Border - White Refl.
Background - Green Refl.

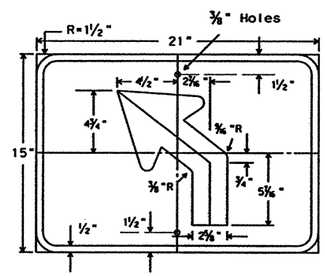

M5-2BL
M5-2BR
21" X 15"

Symbol - White Refl.
Border - White Refl.
Background - Blue Refl.

M5-2GL
M5-2GR
21" X 15"

Symbol - White Refl.
Border - White Refl.
Background - Green Refl.

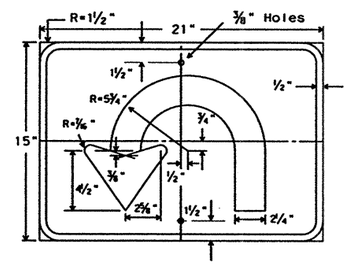

M5-3BL
21" X 15"

Symbol - White Refl.
Border - White Refl.
Background - Blue Refl.

M5-3GL
21" X 15"

Symbol - White Refl.
Border - White Refl.
Background - Green Refl.

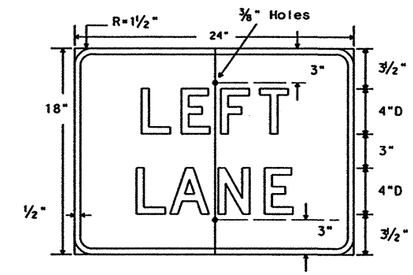

M6-8BL
24" X 18"

Letters - White Refl.
Border - White Refl.
Background - Blue Refl.

M6-8GL
24" X 18"

Letters - White Refl.
Border - White Refl.
Background - Green Refl.

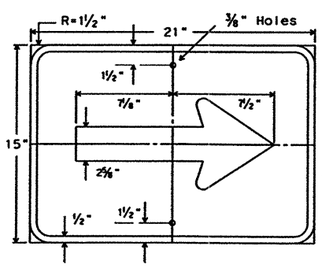

M6-1B
21" X 15"

Symbol - White Refl.
Border - White Refl.
Background - Blue Refl.

M6-1G
21" X 15"

Symbol - White Refl.
Border - White Refl.
Background - Green Refl.

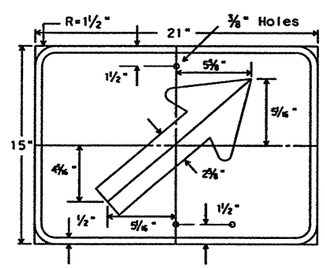

M6-2BR
M6-2BL
21" X 15"

Symbol - White Refl.
Border - White Refl.
Background - Blue Refl.

M6-2GR
M6-2GL
21" X 15"

Symbol - White Refl.
Border - White Refl.
Background - Green Refl.

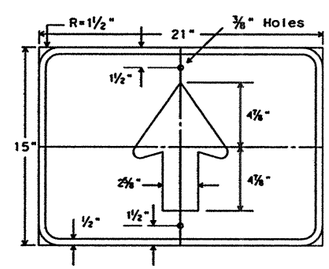

M6-3B
21" X 15"

Symbol - White Refl.
Border - White Refl.
Background - Blue Refl.

M6-3G
21" X 15"

Symbol - White Refl.
Border - White Refl.
Background - Green Refl.

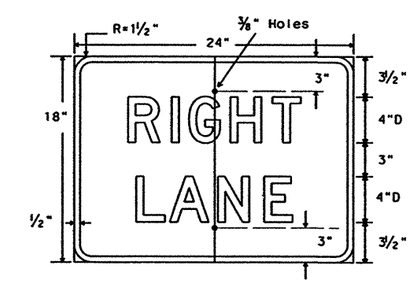

M6-8BR
24" X 18"

Letters - White Refl.
Border - White Refl.
Background - Blue Refl.

M6-8GR
24" X 18"

Letters - White Refl.
Border - White Refl.
Background - Green Refl.

DN: LR
CK: CW
DW: DN
CK: MT

LEVELS DISPLAYED
1 2 3 4 5 6 7 8 9 10 11 12 13 14 15 16
17 18 19 20 21 22 23 24 25 26 27 28 29 30 31 32
33 34 35 36 37 38 39 40 41 42 43 44 45 46 47 48
49 50 51 52 53 54 55 56 57 58 59 60 61 62 63

DATE:
FILE:

STANDARD PLANS
TEXAS DEPARTMENT OF TRANSPORTATION
Traffic Operations Division

AIRPORT, HOSPITAL AND DIRECTIONAL MARKERS FOR INDEPENDENT MOUNTING

IM(5)-93

© TxDOT July 1990

DN: LR	CK: -	DW: DN	CK: -	MSG NO. :

REVISIONS
9-93

STATE DISTRICT	FEDERAL REGION	FEDERAL AID PROJECT	SHEET
22	6	NH-2002 (79)	830

COUNTY	CONTROL	SECTION	JOB	HIGHWAY
WEBB	0018	05	062, ETC	IH 35

b34mp151.dgn-01 HOUFILE023 \hcivil\cf0130\4/18/2003

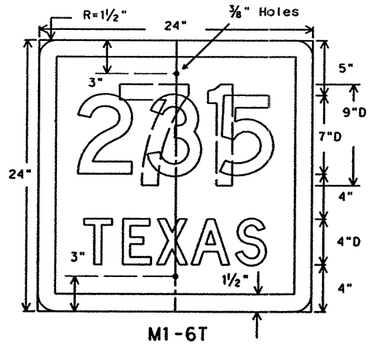

M1-6T
24" X 24"

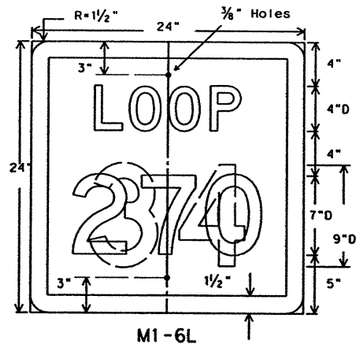

M1-6L
24" X 24"

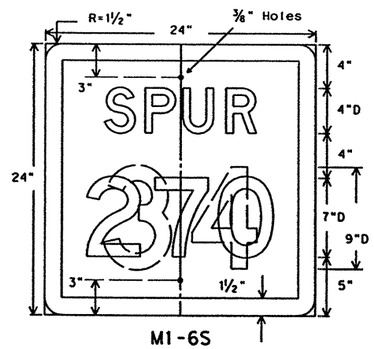

M1-6S
24" X 24"

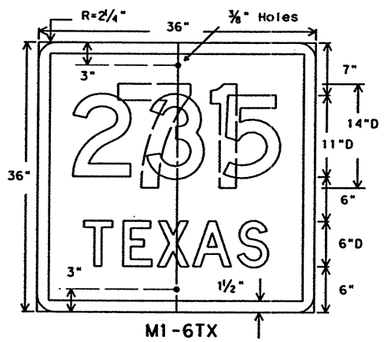

M1-6TX
36" X 36"

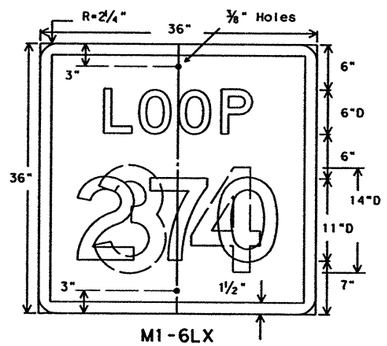

M1-6LX
36" X 36"

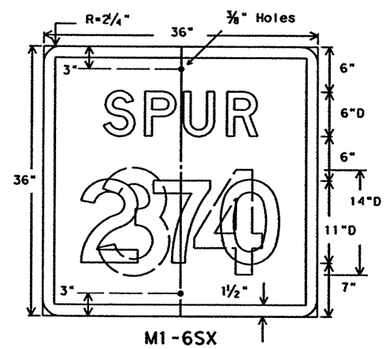

M1-6SX
36" X 36"

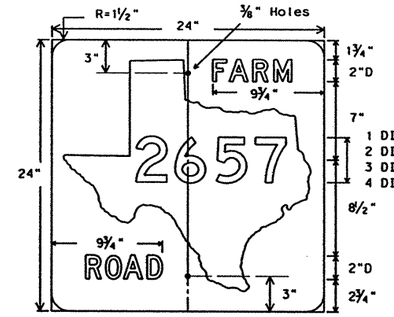

M1-6F
24" X 24"

Letters - White Reflective
Numerals - Black
Symbol - White Reflective
Background - Black

M1-6FX
36" X 36"

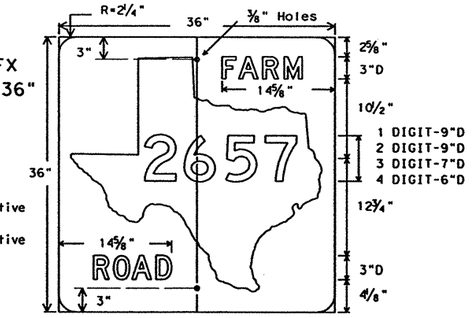

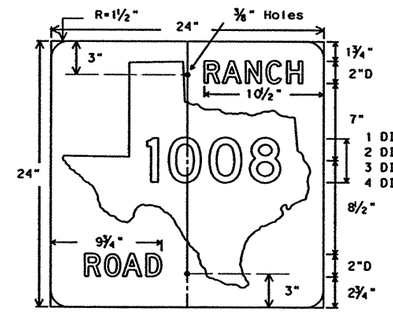

M1-6R
24" X 24"

Letters - White Reflective
Numerals - Black
Symbol - White Reflective
Background - Black

M1-6RX
36" X 36"

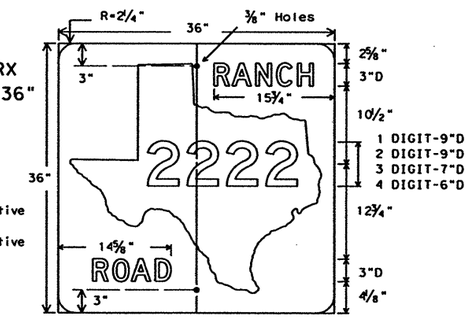

DEPARTMENT MATERIAL SPECIFICATIONS	
ALUMINUM SIGN BLANKS	DMS 7110
FLAT SURFACE REFLECTIVE SHEETING	DMS 8300
VINYL NON-REFLECTIVE DECAL SHEETING	DMS 8320

SIGN SHEETING

COLOR	USAGE	MATERIAL TYPE
WHITE	BACKGROUND	TYPE C (HIGH SPECIFIC INTENSITY)
BLACK	LEGEND & BORDERS	VINYL NON-REFLECTIVE DECAL SHEETING

GENERAL NOTES:

Route Markers are to be used as confirming and reassurance markers and as component parts of a Junction, Route Turn, Directional or Trailblazer assembly.

The alphabets and lateral spacing between letters and numerals shall conform with the "Texas Manual on Uniform Traffic Control Devices for Streets and Highways", latest edition, and any approved changes thereto. Lateral spacing of text shall provide a balanced appearance. All materials shall conform to Department Specifications.

Legend shall be black and applied by screening process, cut-out vinyl non-reflective decal sheeting or combination thereof. Check table for sheeting type if used.

Sign blanks shall be one piece sheet aluminum alloy (Type A). 24 x 24 inch blanks shall be 0.080 inch thick, 36 x 36 inch and larger blanks shall be 0.100 inch thick, unless noted otherwise.

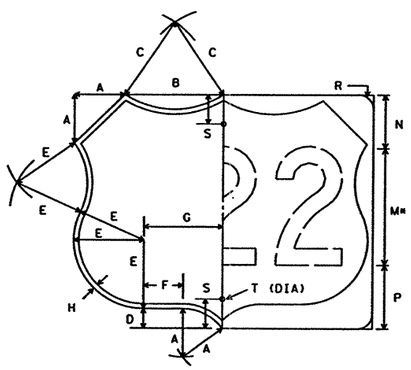

Numerals - Black
Border - Black
Background - White Reflective

		SIZE	A	B	C	D	E
MI-4A2	12" NUMERALS 2 DIGIT	24x24	5	7	5	2	7
MI-4A3	12" NUMERALS 3 DIGIT	30x24	5	10	9	2	7
MI-4B2	18" NUMERALS 2 DIGIT	36x36	7½	10½	7½	3	10½
MI-4B3	18" NUMERALS 3 DIGIT	45x36	7½	15	13½	3	10½

F	G	H	M*	N	P	R	S	T	AREA
1	5	½	12D	5½	6½	1½	3	⅜	3.18
4	8	½	12D	5½	6½	1½	3	⅜	4.05
1½	7½	¾	18D	8¼	9¾	2¼	3	⅜	7.15
6	12	¾	18D	8¼	9¾	2¼	3	⅜	9.11

2/01 Revision

All ground mounted signs to use High Specific Intensity sheeting

STANDARD PLANS
Texas Department of Transportation
Traffic Operations Division

U.S. & STATE ROUTE MARKERS FOR INDEPENDENT MOUNTING

M(1)-01

© TxDOT July 1972			DN: LR	CK: GRB	DW: FDN	CK: CAL
REVISIONS	STATE DISTRICT	FEDERAL REGION	FEDERAL AID PROJECT			SHEET
1-85	22	6	NH-2002 (79)			831
7-90						
8-95	COUNTY		CONTROL	SECTION	JOB	HIGHWAY
2-01	WEBB		0018	05	062, ETC	IH 35

DN: LR CK: CW DW: DN CK: MT
DATE:
ACC: d58hplc/usr/d580504
FILE:
LEVELS
b34mop91.dgn-01 HOUFILE023 \hcivil\cf0130\ 4/18/2003

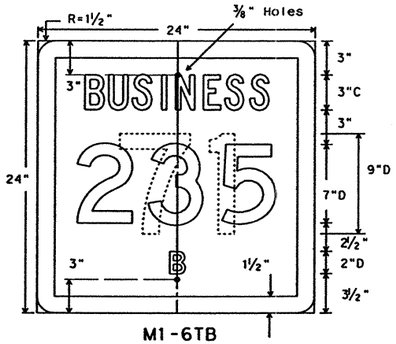

M1-6TB
24" X 24"

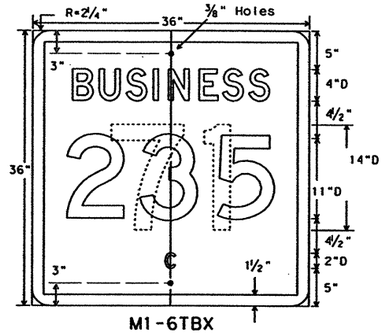

M1-6TBX
36" X 36"

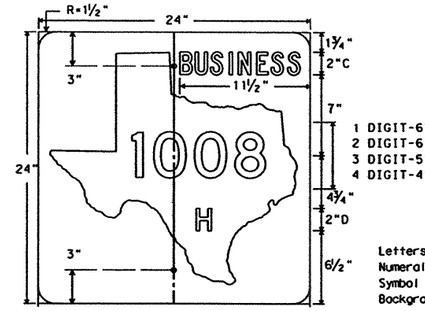

Letters - White Reflective
Numerals - Black
Symbol - White Reflective
Background - Black

M1-6FB
24" X 24"

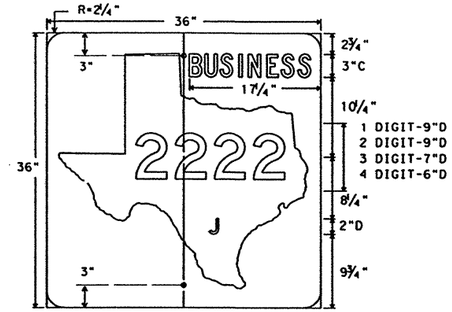

M1-6FBX
36" X 36"

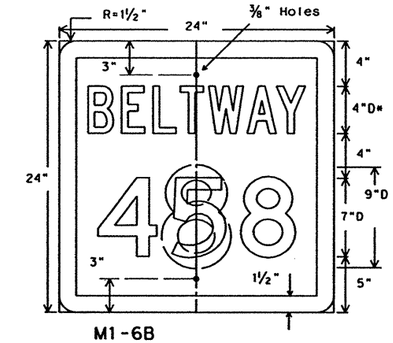

M1-6B
24" X 24"
* reduce spacing 20%

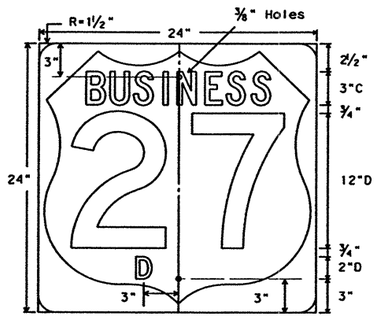

M1-4A2B
24" X 24"

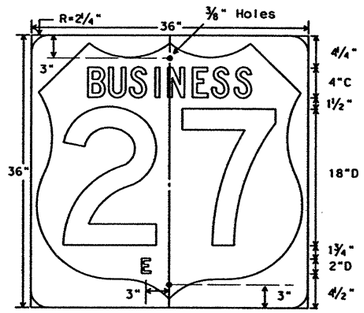

M1-4B2B
36" X 36"

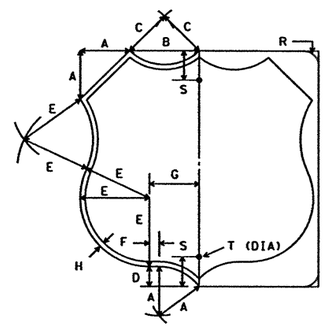

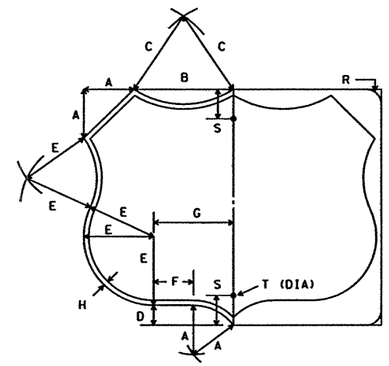

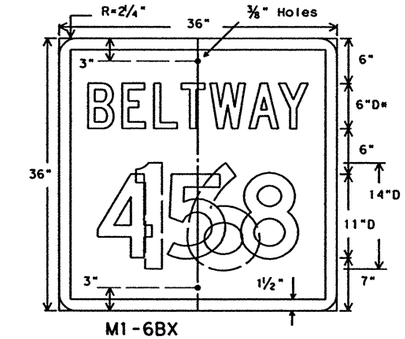

M1-6BX
36" X 36"
* reduce spacing 20%

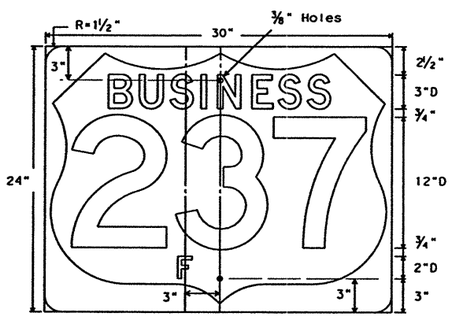

M1-4A3B
30" X 24"

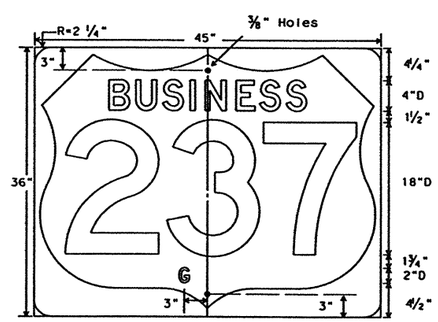

M1-4B3B
45" X 36"

NOTE: M1-4B3 SHALL BE ONE PIECE SHEET ALUMINUM ALLOY 0.100 INCH THICK CONFORMING WITH THE SPECIFICATION ITEM "ALUMINUM SIGNS (TYPE A)."

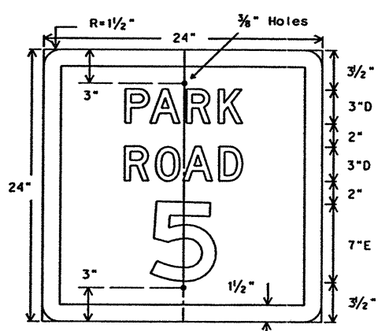

M1-6P
24" X 24"

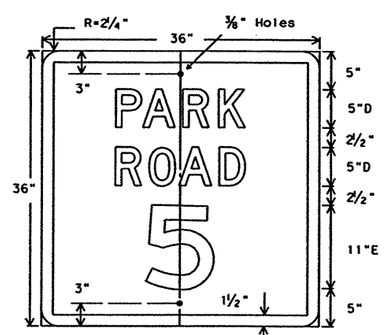

M1-6PX
36" X 36"

		SIZE	A	B	C	D	E	F	G	H	R	S	T
MI-4A2B	12" NUMERALS 2 DIGIT	24x24	5	7	5	2	7	1	5	½	1½	3	⅜
MI-4A3B	12" NUMERALS 3 DIGIT	30x24	5	10	9	2	7	4	8	½	1½	3	⅜
MI-4B2B	18" NUMERALS 2 DIGIT	36x36	7½	10½	7½	3	10½	1½	7½	¾	2¼	3	⅜
MI-4B3B	18" NUMERALS 3 DIGIT	45x36	7½	15	13½	3	10½	6	12	¾	2¼	3	⅜

GENERAL NOTES:

Route Markers are to be used as confirming and reassurance markers and as component parts of a Junction, Route Turn, Directional or Trailblazer assembly.

The alphabets and lateral spacing between letters and numerals shall conform with the "Texas Manual on Uniform Traffic Control Devices for Streets and Highways", latest edition, and any approved changes thereto. Lateral spacing of text shall provide a balanced appearance. All materials shall conform to Department Specifications.

1 Legend shall be black and applied by screening process, cut-out vinyl non-reflective decal sheeting or combination thereof. Check table for sheeting type if used.

Sign blanks shall be one piece sheet aluminum alloy (Type A). 24 x 24 inch blanks shall be 0.080 inch thick, 36 x 36 inch and larger blanks shall be 0.100 inch thick, unless noted otherwise.

DEPARTMENT MATERIAL SPECIFICATIONS

ALUMINUM SIGN BLANKS	DMS 7110
FLAT SURFACE REFLECTIVE SHEETING	DMS 8300
VINYL NON-REFLECTIVE SHEETING	DMS 8320

1 SIGN SHEETING

COLOR	USAGE	MATERIAL TYPE
WHITE	BACKGROUND	TYPE C (HIGH SPECIFIC INTENSITY)
BLACK	LEGEND & BORDERS	VINYL NON-REFLECTIVE SHEETING

1 2/01 Revision

All ground mounted signs to use High Specific Intensity sheeting

STANDARD PLANS
Texas Department of Transportation
Traffic Operations Division

U.S. & STATE ROUTE MARKERS FOR INDEPENDENT MOUNTING

M(2)-01

©TxDOT July 1990

DN-LR	CK-GRB	DW-FDN	CK-CAL

REVISIONS	STATE DISTRICT	FEDERAL REGION	FEDERAL AID PROJECT	SHEET
8-95 2-01	22	6	NH-2002 (79)	832

COUNTY	CONTROL	SECTION	JOB	HIGHWAY
WEBB	0018	05	062, ETC	IH 35

DN: LR
CK: CW
DW: DN
CK: MT

DATE:
ACC: d58hplc/usr/d580504
FILE:

LEVELS 1 2 4 5 6 7 8 9 10 11 12 13 14 15 16 17 18 19 20 21 22 23 24 25 26 27 28 29 30 31 32 33 34 35 36 37 38 39 40 41 42 43 44 45 46 47 48 49 50 51 52 53 54 55 56 57 58 59 60 61 62 63

b34mop92.dgn-01 HOUFILE023 \hcivil\cf0130\ 4/18/2003

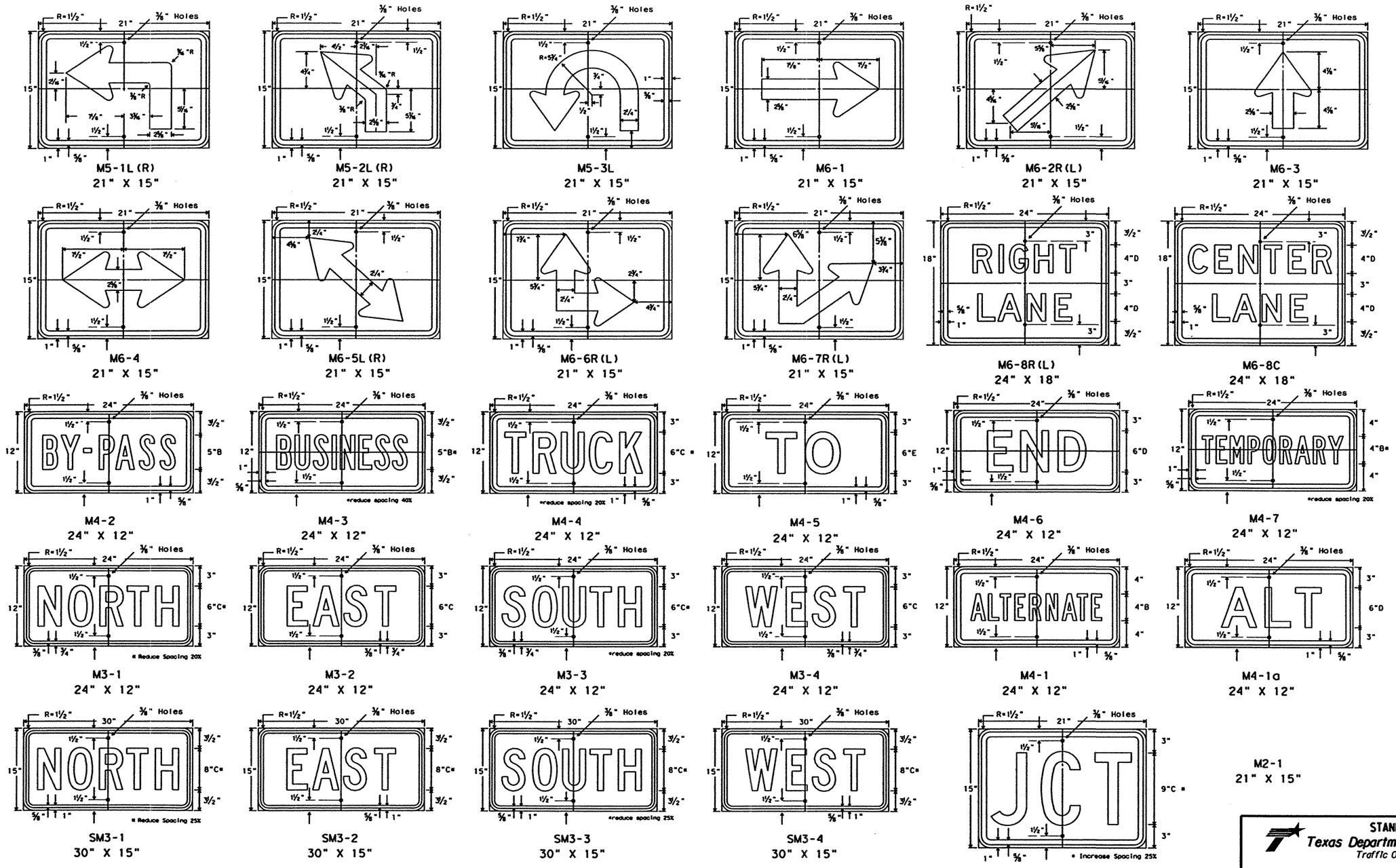

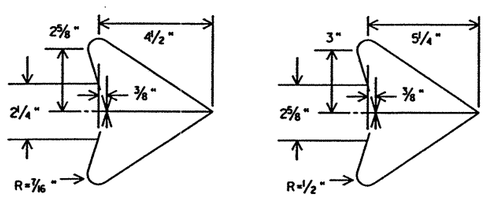

GENERAL NOTES:

The alphabets and lateral spacing between letters and numerals shall conform with the "Texas Manual on Uniform Traffic Control Devices for Streets and Highways", latest edition, and any approved changes thereto. Lateral spacing of text shall provide a balanced appearance. All materials shall conform to Department Specifications.

Legend shall be black and applied by screening process, cut-out vinyl non-reflective decal sheeting or combination thereof. Check table for sheeting type if used.

Sign blanks shall be one piece 0.080 inch thick sheet aluminum alloy (Type A), unless noted otherwise.

DEPARTMENT MATERIAL SPECIFICATIONS

ALUMINUM SIGN BLANKS	DMS 7110
FLAT SURFACE REFLECTIVE SHEETING	DMS 8300
VINYL NON-REFLECTIVE SHEETING	DMS 8320

SIGN SHEETING

COLOR	USAGE	MATERIAL TYPE
WHITE	BACKGROUND	TYPE C (HIGH SPECIFIC INTENSITY)
BLACK	LEGEND & BORDERS	VINYL NON-REFLECTIVE SHEETING

2/01 Revision

All ground mounted signs to use High Specific Intensity sheeting

STANDARD PLANS
Texas Department of Transportation
Traffic Operations Division

ROUTE MARKER AUXILIARIES

M(3)-01

©TxDOT July 1990

DN-LR/MT	CK-GRB	DW-FDN	CK-CAL

REVISIONS	STATE DISTRICT	FEDERAL REGION	FEDERAL AID PROJECT	SHEET
8-95	22	6	NH-2002 (79)	833
4-97				
2-01				

COUNTY	CONTROL	SECTION	JOB	HIGHWAY
WEBB	0018	05	062, ETC	IH 35

DISCLAIMER
The use of this standard is governed by the "Texas Engineering Practice Act". No warranty of any kind is made by TxDOT for any purpose whatsoever. TxDOT assumes no responsibility for the conversion of this standard to other formats or for incorrect results or damages resulting from its use.

DN: CK: DW: CK:

DATE: ACC: FILE:

LEVELS DISPLAYED

b34mop93.dgn-01 HOUFILE023 \hcivil\cf0130\ 4/18/2003

REFERENCE MARKER PLAQUE

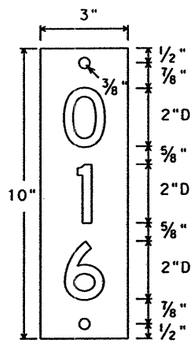

D10-7a
3 X 10

Letters - White Reflective
Numerals - White Reflective
Background - Green Reflective

Use preceding zero for total of three digits

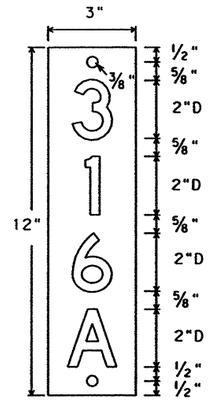

D10-7b
3 X 12

Letters - White Reflective
Numerals - White Reflective
Background - Green Reflective

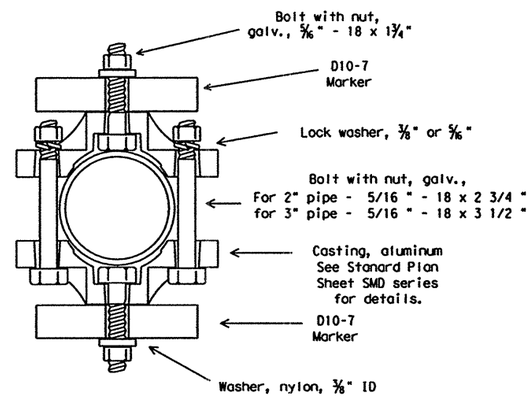

TYPICAL ATTACHMENT

2" OR 3" ROUND
PIPE SUPPORT

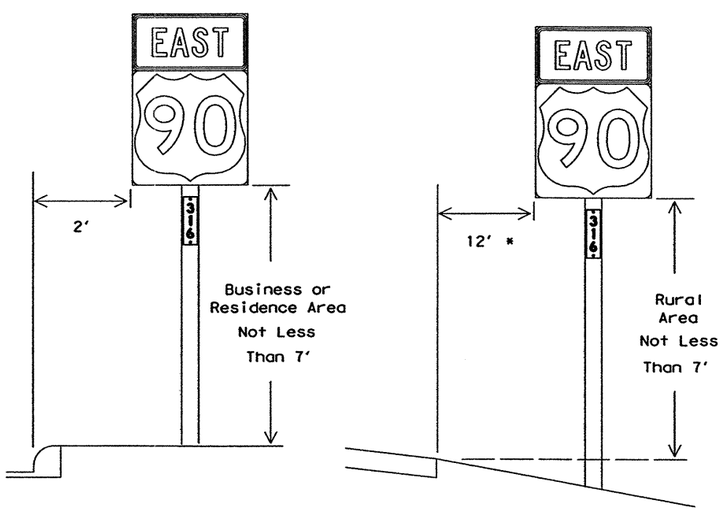

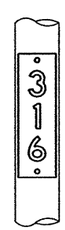

TYPICAL MOUNTING

Use breakaway design that will leave a stub in ground, so mount can be accurately reinstalled.

Reference Marker Plaque should cover existing milepost number, or old number should be removed. Plaques to be mounted back to back.

DEPARTMENT MATERIAL SPECIFICATIONS

PLYWOOD SIGN BLANKS	DMS 7100
ALUMINUM SIGN BLANKS	DMS 7110
FLAT SURFACE REFLECTIVE SHEETING	DMS 8300

SIGN SHEETING

COLOR	USAGE	MATERIAL TYPE
GREEN	BACKGROUND	TYPE C (HIGH SPECIFIC INTENSITY)
WHITE	BACKGROUND	TYPE C (HIGH SPECIFIC INTENSITY)
WHITE	LEGEND & BORDERS	TYPE C (HIGH SPECIFIC INTENSITY)

GENERAL NOTES:

The alphabets and lateral spacing between letters and numerals shall conform with the "Texas Manual on Uniform Traffic Control Devices for Streets and Highways", latest edition, and any approved changes thereto. Lateral spacing of text shall provide a balanced appearance. All materials shall conform to Department Specifications.

Legend for Reference Markers shall be applied by screening process with transparent colored ink, transparent colored overlay film, cut-out white reflective sheeting applied to colored background or combination thereof. Check table for sheeting type if used.

Reference Markers shall be one piece 0.080 inch thick sheet aluminum alloy (Type A), or 5/8 inch thick plywood (Type A).

2/01 Revision

All ground mounted signs to use High Specific Intensity sheeting

Removed diagram using wing-channel steel post for sign support

STANDARD PLANS
Texas Department of Transportation
Traffic Operations Division

REFERENCE MARKER AND MOUNTING

M(4)-01

©TxDOT July 1990 DN: LR CK: GRB DW: FDN CK: CAL

REVISIONS	STATE DISTRICT	FEDERAL REGION	FEDERAL AID PROJECT	SHEET
9-93	22	6	NH-2002 (79)	834
8-95				
2-01				

COUNTY	CONTROL	SECTION	JOB	HIGHWAY
WEBB	0018	05	062, ETC	IH 35

b34mb152.dgn-01 HOUFILE023 \hcivil\cf0130\4/18/2003

DISCLAIMER
The use of this standard is governed by the "Texas Engineering Practice Act". No warranty of any kind is made by TxDOT for any purpose whatsoever. TxDOT assumes no responsibility for the conversion of this standard to other formats or for incorrect results or damages resulting from its use.

DN: CK: DW: CK:

LEVELS DISPLAYED

1	2	3	4	5	6	7	8	9	10	11	12	13	14	15	16	DATE:
17	18	19	20	21	22	23	24	25	26	27	28	29	30	31	32	ACC:
33	34	35	36	37	38	39	40	41	42	43	44	45	46	47	48	
49	50	51	52	53	54	55	56	57	58	59	60	61	62	63		FILE:

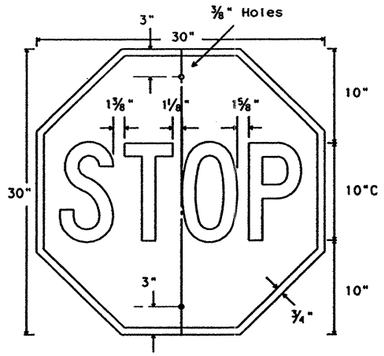

R1-1
30" X 30"

Letters - White Reflective
Border - White Reflective
Background - Red Reflective

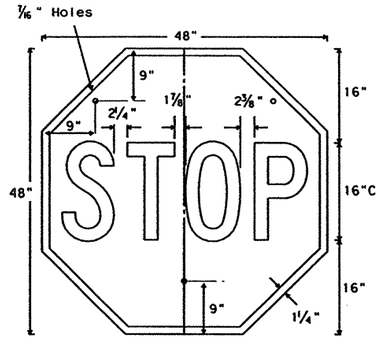

SR1-1
48" X 48"

Letters - White Reflective
Border - White Reflective
Background - Red Reflective

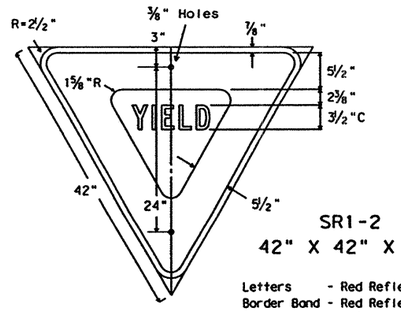

SR1-2
42" X 42" X 42"

Letters - Red Reflective
Border Band - Red Reflective
Background - White Reflective

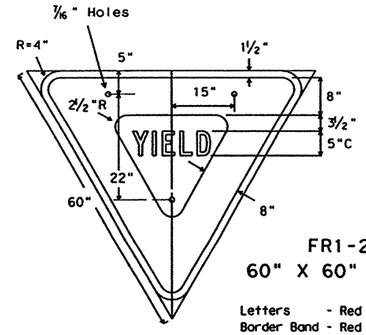

FR1-2
60" X 60" X 60"

Letters - Red Reflective
Border Band - Red Reflective
Background - White Reflective

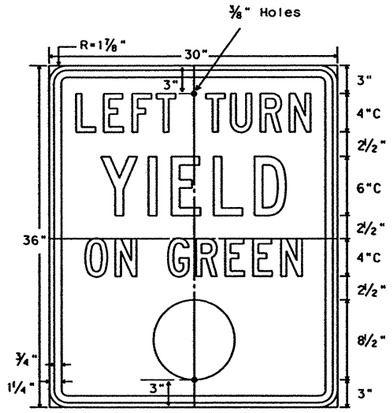

R10-12
30" X 36"

Letters - Black
Border - Black
Circle - Green Refl.
Background - White Refl.

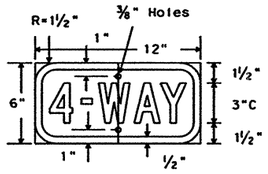

R1-3
12" X 6"

Letters - White Reflective
Border - White Reflective
Background - Red Reflective

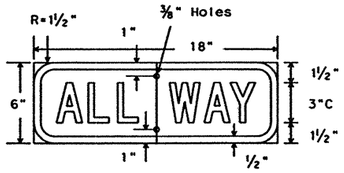

R1-4
18" X 6"

Letters - White Reflective
Border - White Reflective
Background - Red Reflective

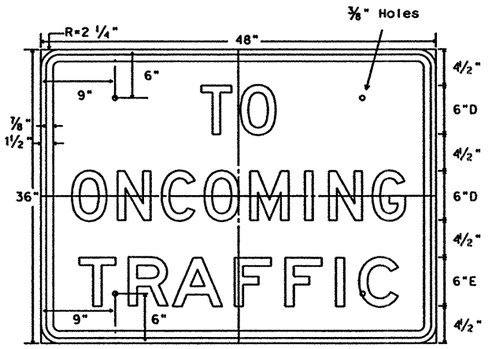

SR1-2b
48" X 36"

Legend - Black
Background - White Refl.

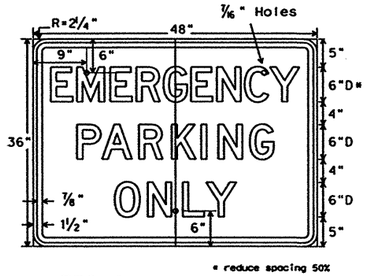

* reduce spacing 50%

FR8-4
48" X 36"

Legend - Black
Background - White Refl.

STOPPING 6"D
FR8-7

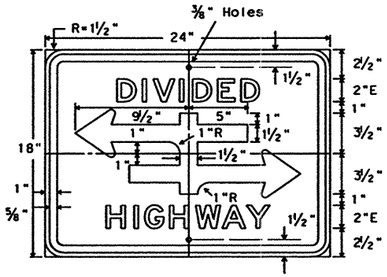

R6-3
24" X 18"

Legend - Black
Background - White Refl.

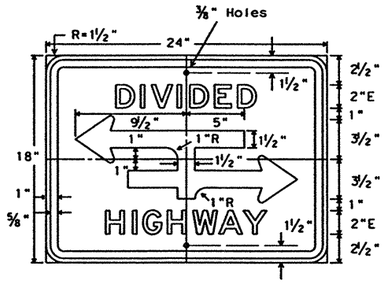

R6-3a
24" X 18"

Legend - Black
Background - White Refl.

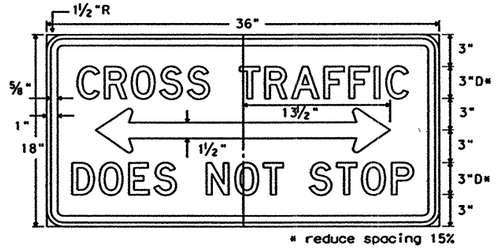

* reduce spacing 15%

R1-5b
36" X 18"

Legend - Black
Background - White Refl.

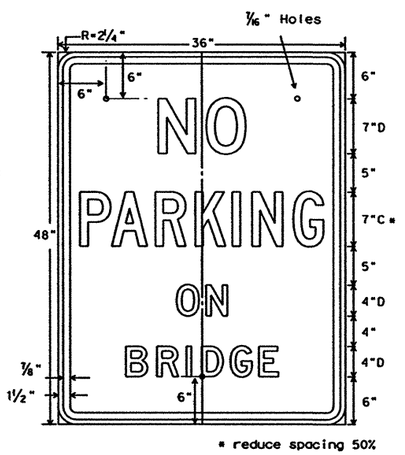

* reduce spacing 50%

ER8-1T
36" X 48"

Letters -Red Reflective
Border -Red Reflective
Background - White Reflective

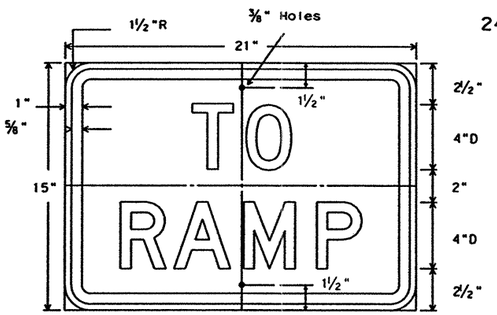

R1-2a
21" X 15"

Legend - Black
Background - White Refl.

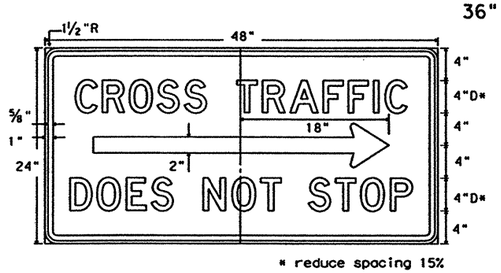

* reduce spacing 15%

SR1-5R
48" X 24"

Legend - Black
Background - White Refl.

DEPARTMENT MATERIAL SPECIFICATIONS

PLYWOOD SIGN BLANKS	DMS 7100
ALUMINUM SIGN BLANKS	DMS 7110
FLAT SURFACE REFLECTIVE SHEETING	DMS 8300
VINYL NON-REFLECTIVE SHEETING	DMS 8320

SIGN SHEETING

COLOR	USAGE	MATERIAL TYPE
GREEN	LEGEND	TYPE C (HIGH SPECIFIC INTENSITY)
RED	LEGEND/BACKGROUND	TYPE C (HIGH SPECIFIC INTENSITY)
WHITE	BACKGROUND	TYPE C (HIGH SPECIFIC INTENSITY)
WHITE	LEGEND & BORDERS	TYPE C (HIGH SPECIFIC INTENSITY)
BLACK	LEGEND & BORDERS	VINYL NON-REFLECTIVE SHEETING

GENERAL NOTES:

The alphabets and lateral spacing between letters and numerals shall conform with the "Texas Manual on Uniform Traffic Control Devices for Streets and Highways", latest edition, and any approved changes thereto. Lateral spacing of text shall provide a balanced appearance. All materials shall conform to Department Specifications.

Colored legends shall be applied by screening process with transparent colored ink, transparent colored overlay film, cut-out white reflective sheeting applied to colored background, colored sheeting or combination thereof. Black legends shall be applied by screening process, cut-out vinyl non-reflective decal sheeting or combination thereof. Check table for sheeting type if used.

Sign blanks shall be any material that meets the DMS requirements for permanent sign substrates.

2/01 Revision

All ground mounted signs to use High Specific Intensity sheeting

STANDARD PLANS
Texas Department of Transportation
Traffic Operations Division

REGULATORY SIGNS

R(1)-01

©TxDOT February 1976 DN:-LR/MT CK:-GRB DW:-FDN CK:-CAL

REVISIONS	STATE DISTRICT	FEDERAL REGION	FEDERAL AID PROJECT	SHEET
7-90 8-95 4-98 2-01	22	6	NH-2002 (79)	835

COUNTY	CONTROL	SECTION	JOB	HIGHWAY
WEBB	0018	05	062, ETC	IH 35

DN:LR CK:CW DW:DN CK:MT
DATE: ACC: d58hplc/usr/d580504 FILE:
LEVELS D1 D2
h34mp157.dgn-01 HOUFILE023 \hcivil\cf013034/18/2003

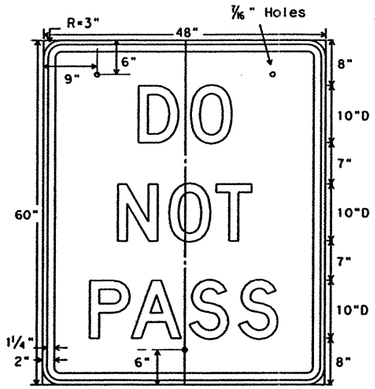

FR4-1
48" X 60"

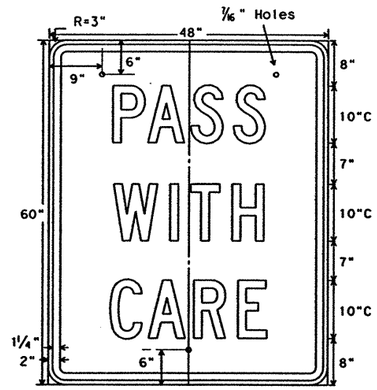

FR4-2
48" X 60"

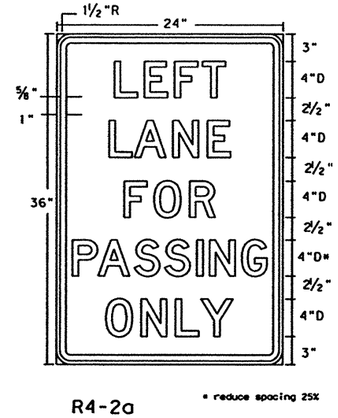

R4-2a
24" X 36"

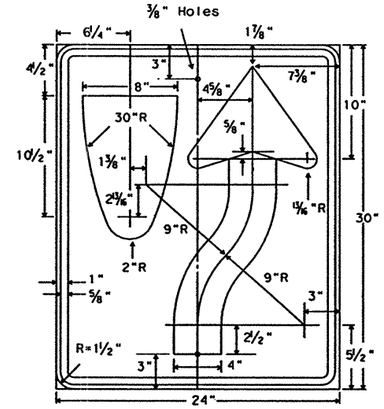

R4-7
24" X 30"

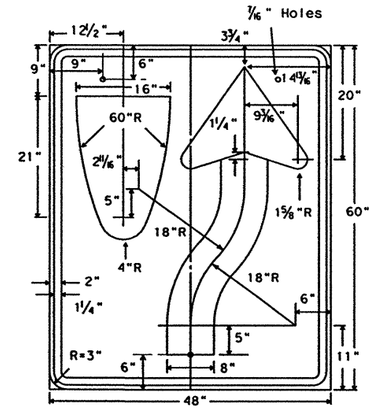

FR4-7
48" X 60"

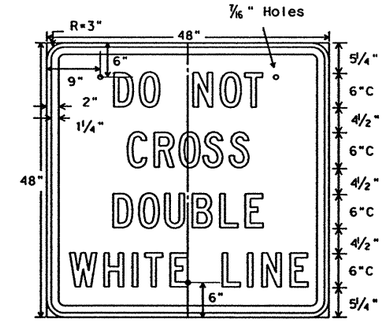

FR4-3B
48" X 48"

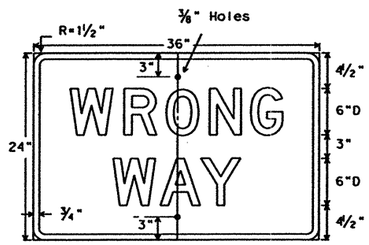

R5-1a
36" X 24"

Letters - White Reflective
Border - White Reflective
Background - Red Reflective

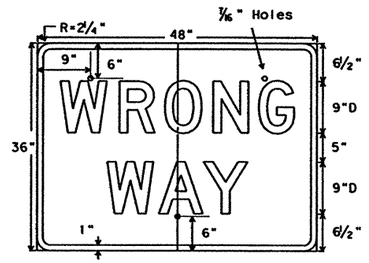

SR5-1a
48" X 36"

Letters - White Reflective
Border - White Reflective
Background - Red Reflective

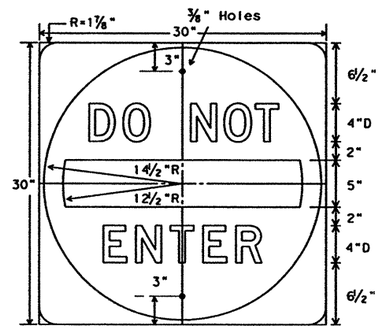

R5-1
30" X 30"

Letters - White Reflective
Bar - White Reflective
Background - Red Reflective

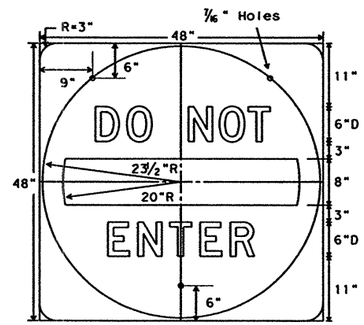

SR5-1
48" X 48"

Letters - White Reflective
Bar - White Reflective
Background - Red Reflective

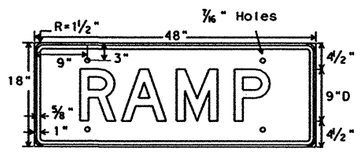

R5-1T
48" X 18"

Letters -Red Reflective
Border -Red Reflective
Background - White Reflective

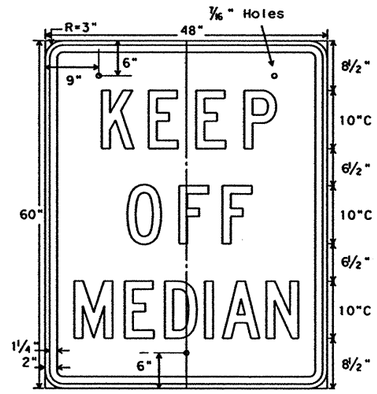

FR11-1
48" X 60"

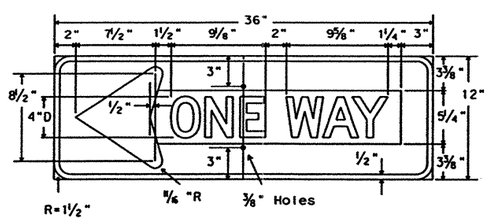

R6-1L
36" X 12"

Letters - Black
Symbol - White Reflective
Border - White Reflective
Background - Black

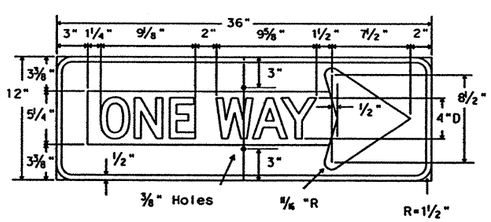

R6-1R
36" X 12"

Letters - Black
Symbol - White Reflective
Border - White Reflective
Background - Black

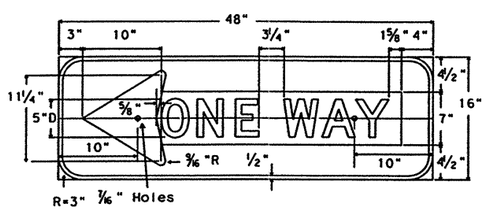

FR6-1L
48" X 16"

Letters - Black
Symbol - White Reflective
Border - White Reflective
Background - Black

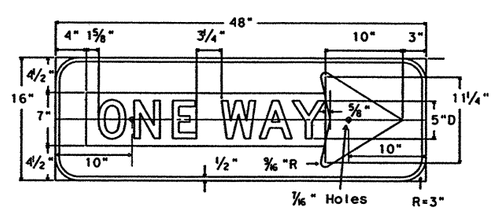

FR6-1R
48" X 16"

Letters - Black
Symbol - White Reflective
Border - White Reflective
Background - Black

GENERAL NOTES:

The alphabets and lateral spacing between letters and numerals shall conform with the "Texas Manual on Uniform Traffic Control Devices for Streets and Highways", latest edition, and any approved changes thereto. Lateral spacing of text shall provide a balanced appearance. All materials shall conform to Department Specifications.

Colored legends shall be applied by screening process with transparent colored ink, transparent colored overlay film, cut-out white reflective sheeting applied to colored background or combination thereof. Black legends and background shall be applied by screening process, cut-out vinyl non-reflective decal sheeting or combination thereof. Check table for sheeting type if used.

Sign blanks shall be any material that meets the DMS requirements for permanent sign substrates.

DEPARTMENT MATERIAL SPECIFICATIONS

PLYWOOD SIGN BLANKS	DMS 7100
ALUMINUM SIGN BLANKS	DMS 7110
FLAT SURFACE REFLECTIVE SHEETING	DMS 8300
VINYL NON-REFLECTIVE SHEETING	DMS 8320

SIGN SHEETING

COLOR	USAGE	MATERIAL TYPE
RED	LEGEND/BACKGROUND	TYPE C (HIGH SPECIFIC INTENSITY)
WHITE	BACKGROUND	TYPE C (HIGH SPECIFIC INTENSITY)
WHITE	LEGEND & BORDERS	TYPE C (HIGH SPECIFIC INTENSITY)
BLACK	LEGEND & BORDERS	VINYL NON-REFLECTIVE SHEETING
BLACK	BACKGROUND	VINYL NON-REFLECTIVE SHEETING

2/01 Revision

All ground mounted signs to use High Specific Intensity sheeting

STANDARD PLANS
Texas Department of Transportation
Traffic Operations Division

REGULATORY SIGNS

R(2)-01

©TxDOT February 1976	DN:-LR	CK:-GRB	DR:-FDN	CK:-CAL
REVISIONS 7-90, 8-95, 12-97, 2-01	STATE DISTRICT 22	FEDERAL REGION 6	FEDERAL AID PROJECT NH-2002 (79)	SHEET 836
COUNTY WEBB	CONTROL 0018	SECTION 05	JOB 062, ETC	HIGHWAY IH 35

DN: LR CK: CW DW: DN CK: MT
DATE:
ACC: d58hplc/usr/d580504
FILE:
LEVELS
b34mop94.dgn-01 HOUFILE023 \hcivil\cf0130\ 4/18/2003

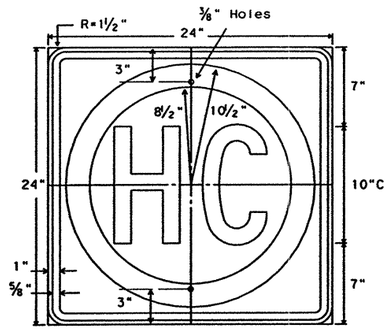

R14-2
24" X 24"

Letters - Black
Border - Black
Ring - Green Reflective
Background - White Reflective

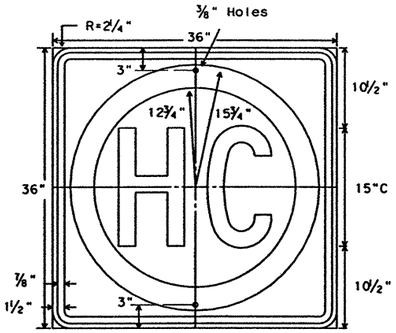

ER14-2
36" X 36"

Letters - Black
Border - Black
Ring - Green Reflective
Background - White Reflective

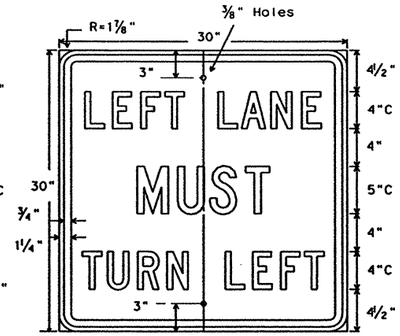

R3-7L
30" X 30"

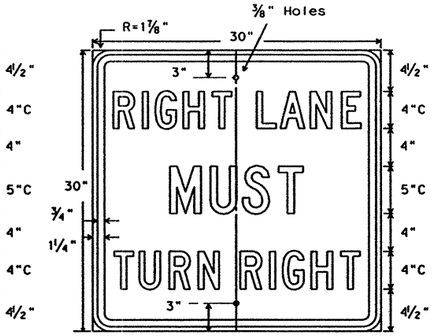

R3-7R
30" X 30"

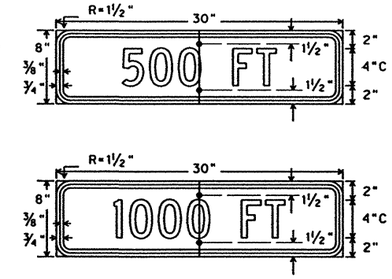

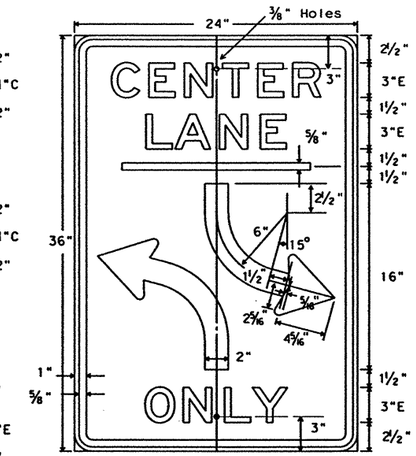

R3-9b
24" X 36"

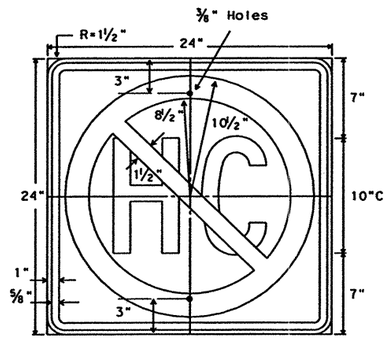

R14-3
24" X 24"

Letters - Black
Border - Black
Ring/Slash - Red Reflective
Background - White Reflective

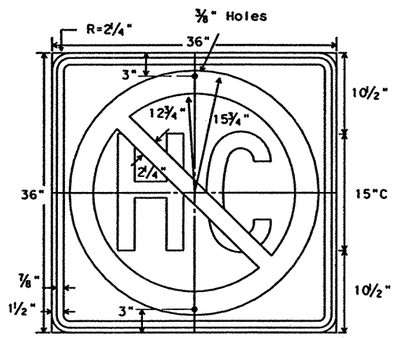

ER14-3
36" X 36"

Letters - Black
Border - Black
Ring/Slash - Red Reflective
Background - White Reflective

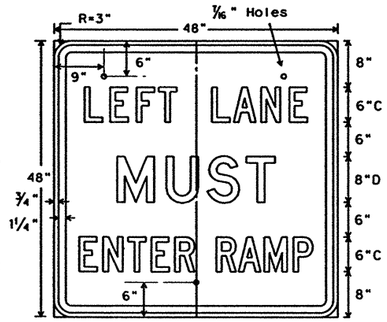

R3-20
48" X 48"

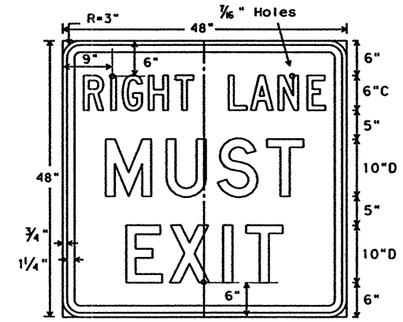

R3-21R
48" X 48"

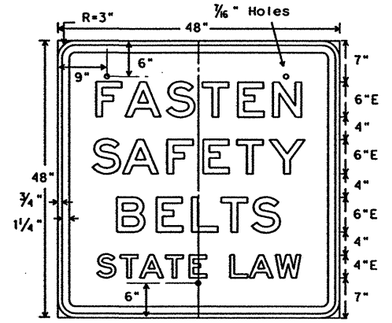

FR19-8
48" X 48"

Letters - Black
Arrow - Black
Border - Black
Circle & Diagonal - Red Reflective
Background - White Reflective

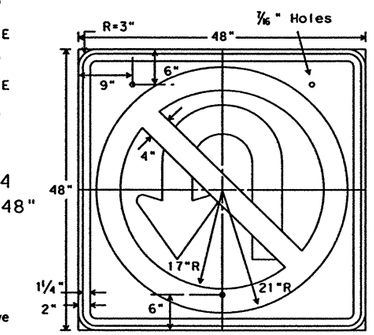

SR3-4
48" X 48"

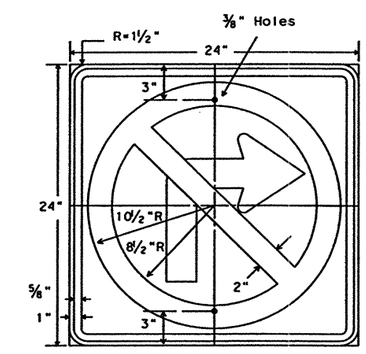

R3-1
24" X 24"

Letters - Black
Arrow - Black
Border - Black
Circle & Diagonal - Red Reflective
Background - White Reflective

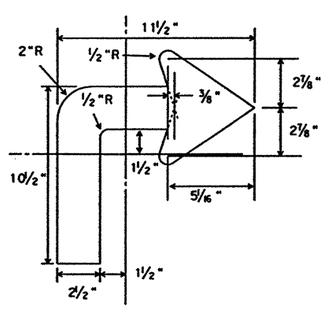

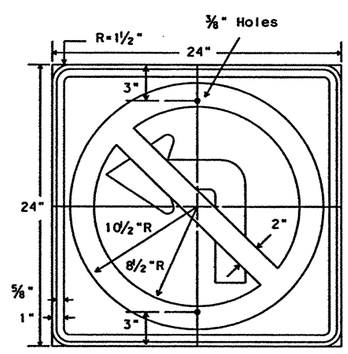

R3-2
24" X 24"

Letters - Black
Arrow - Black
Border - Black
Circle & Diagonal - Red Reflective
Background - White Reflective

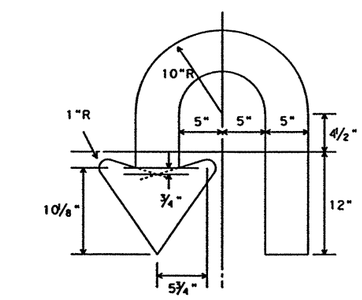

DEPARTMENT MATERIAL SPECIFICATIONS

PLYWOOD SIGN BLANKS	DMS 7100
ALUMINUM SIGN BLANKS	DMS 7110
FLAT SURFACE REFLECTIVE SHEETING	DMS 8300
VINYL NON-REFLECTIVE DECAL SHEETING	DMS 8320

SIGN SHEETING

COLOR	USAGE	MATERIAL TYPE
WHITE	BACKGROUND	TYPE C (HIGH SPECIFIC INTENSITY)
GREEN	LEGEND	TYPE C (HIGH SPECIFIC INTENSITY)
RED	LEGEND	TYPE C (HIGH SPECIFIC INTENSITY)
BLACK	LEGEND & BORDERS	VINYL NON-REFLECTIVE DECAL SHEETING

GENERAL NOTES:

The alphabets and lateral spacing between letters and numerals shall conform with the "Texas Manual on Uniform Traffic Control Devices for Streets and Highways", latest edition, and any approved changes thereto. Lateral spacing of text shall provide a balanced appearance. All materials shall conform to Department Specifications.

Colored legends shall be applied by screening process with transparent colored ink, transparent colored overlay film, colored sheeting or combination thereof. Black legends shall be applied by screening process, cut-out vinyl non-reflective decal sheeting or combination thereof. Check table for sheeting type if used.

Sign blanks shall be any material that meets the DMS requirements for permanent sign substrates.

2/01 Revision

All ground mounted signs to use High Specific Intensity sheeting

STANDARD PLANS
Texas Department of Transportation
Traffic Operations Division

REGULATORY SIGNS

R(3)-01

©TxDOT July 1990	DN: LR	CK: GRB	DW: FDN	CK: CAL
REVISIONS 8-95 2-01	STATE DISTRICT 22	FEDERAL REGION 6	FEDERAL AID PROJECT NH-2002 (79)	SHEET 837
	COUNTY WEBB	CONTROL 0018	SECTION 05	JOB 062, ETC	HIGHWAY IH 35

DN: LR
CK: CW
DW: DN
CK: MT

DATE:
ACC: d58hplc/usr/d580504
FILE:

LEVELS DISPLAYED

b34mp158.dgn-01 HOUFILE023 \hcivil\cf0130\4/18/2003

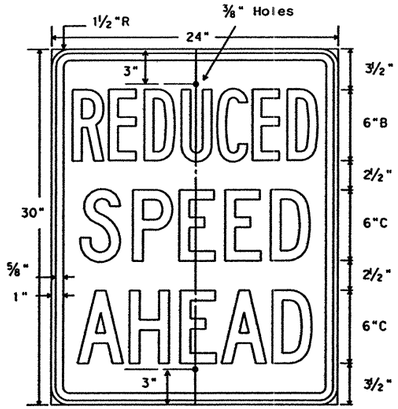

R2-5a
24" X 30"
Legend - Black
Background - White Refl.

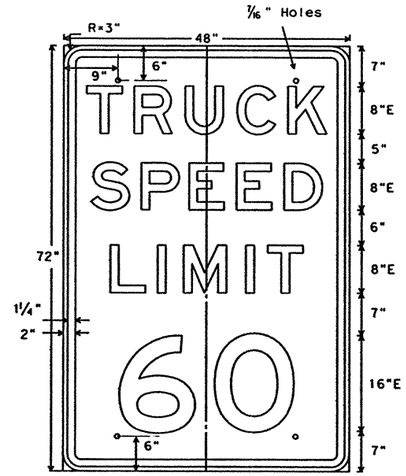

FR2-2a
48" X 72"
Legend - Black
Background - White Refl.

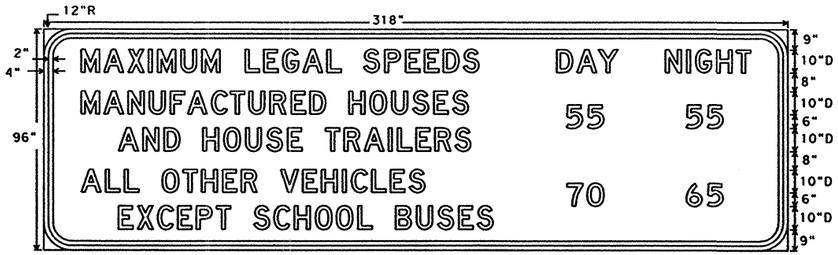

R2-4Tc
318" X 96"
Legend - Black
Background - White Refl.
(For IH, US & SH entrances to the State only)

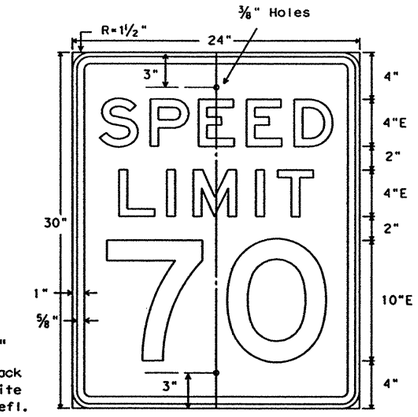

R2-1
24" X 30"
Legend - Black
Background - White Refl.

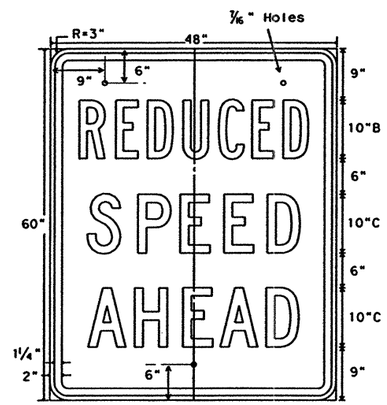

FR2-5a
48" X 60"
Legend - Black
Background - White Refl.

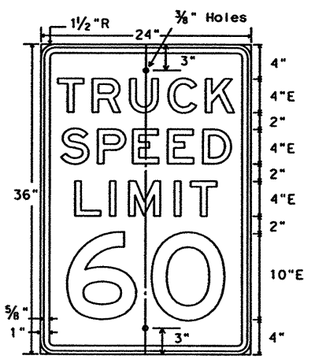

R2-2a
24" X 36"
Legend - Black
Background - White Refl.

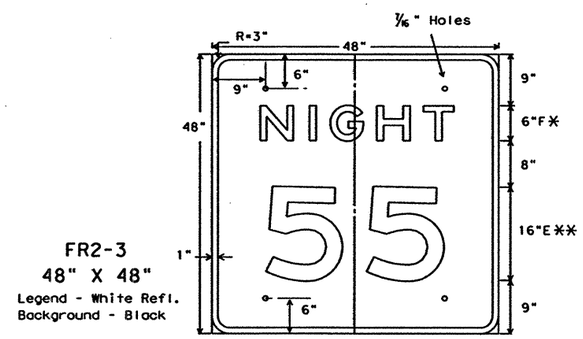

FR2-3
48" X 48"
Legend - White Refl.
Background - Black

**optically space numerals about vertical centerline
* increase spacing 50%

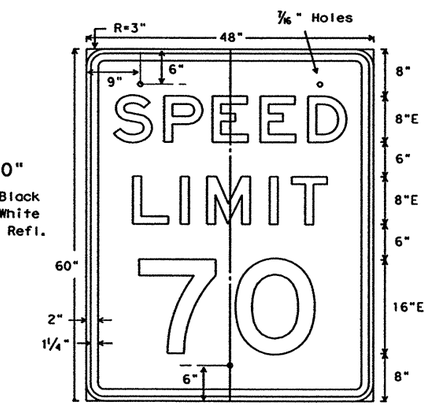

FR2-1
48" X 60"
Legend - Black
Background - White Refl.

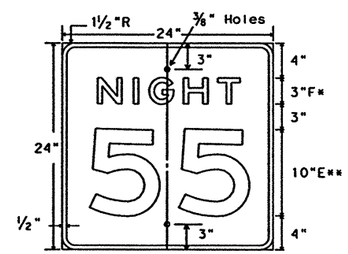

R2-3
24" X 24"
Legend - White Refl.
Background - Black

**optically space numerals about vertical centerline
* increase spacing 50%

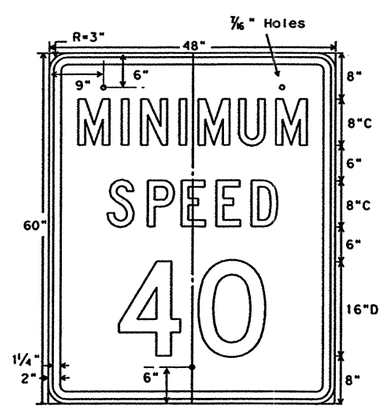

FR2-4
48" X 60"
Legend - Black
Background - White Refl.

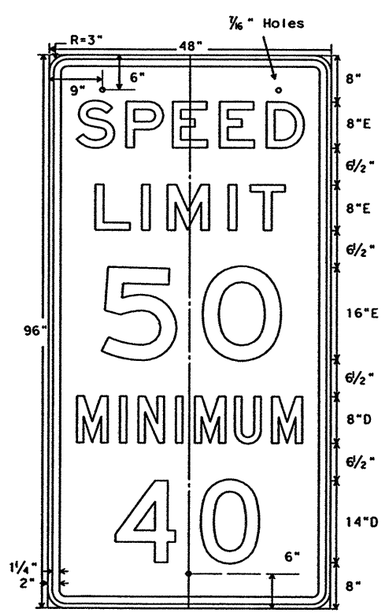

FR2-4a
48" X 96"
Legend - Black
Background - White Refl.

GENERAL NOTES:

The alphabets and lateral spacing between letters and numerals shall conform with the "Texas Manual on Uniform Traffic Control Devices for Streets and Highways", latest edition, and any approved changes thereto. Lateral spacing of text shall provide a balanced appearance. All materials shall conform to Department Specifications.

Legend (except where noted), shall be black and applied by screening process, cut-out vinyl non-reflective decal sheeting or combination thereof. Check table for sheeting type if used. Legend on R2-3 and FR2-3 shall be reflective white on black background.

Sign blanks shall be any material that meets the DMS requirements for permanent sign substrates.

DEPARTMENT MATERIAL SPECIFICATIONS

PLYWOOD SIGN BLANKS	DMS 7100
ALUMINUM SIGN BLANKS	DMS 7110
FLAT SURFACE REFLECTIVE SHEETING	DMS 8300
VINYL NON-REFLECTIVE SHEETING	DMS 8320

SIGN SHEETING

COLOR	USAGE	MATERIAL TYPE
WHITE	BACKGROUND	TYPE C (HIGH SPECIFIC INTENSITY)
WHITE	LEGEND & BORDER	TYPE C (HIGH SPECIFIC INTENSITY)
BLACK	LEGEND & BORDER	VINYL NON-REFLECTIVE SHEETING
BLACK	BACKGROUND	VINYL NON-REFLECTIVE SHEETING

2/01 Revision

All ground mounted signs to use High Specific Intensity sheeting

Removed signs R2-4T, FR2-4Ta, and FR2-4T replaced with R2-4Tc

STANDARD PLANS
Texas Department of Transportation
Traffic Operations Division

REGULATORY SIGNS

R(4)-01

©TxDOT August 1995			DN-LR	CK-GRB	DW-FDN	CK-CAL
REVISIONS 12-95 4-98 2-01	STATE DISTRICT	FEDERAL REGION	FEDERAL AID PROJECT			SHEET
	22	6	NH-2002 (79)			838
	COUNTY		CONTROL	SECTION	JOB	HIGHWAY
	WEBB		0018	05	062, ETC	IH 35

DN: LR CK: CW DW: DN CK: MT
DATE: ACC: d58hplc/usr/d580504 FILE:
LEVELS 1 2 3 4 5 6 7 8 9 10 11 12 13 14 15 16 17 18 19 20 21 22 23 24 25 26 27 28 29 30 31 32 33 34 35 36 37 38 39 40 41 42 43 44 45 46 47 48 49 50 51 52 53 54 55 56 57 58 59 60 61 62 63

b34mop95.dgn-01 HOUFILE023 \hcivil\cf0130\ 4/18/2003

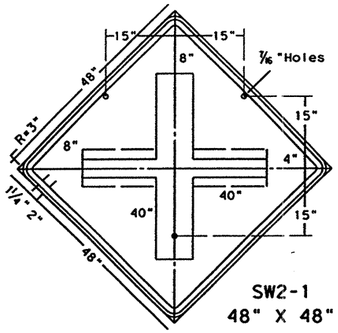

SW2-1
48" X 48"

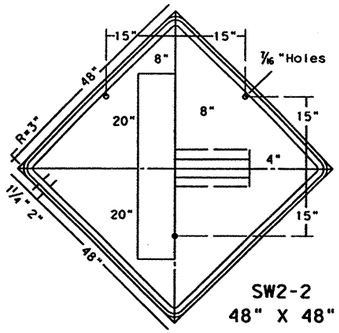

SW2-2
48" X 48"

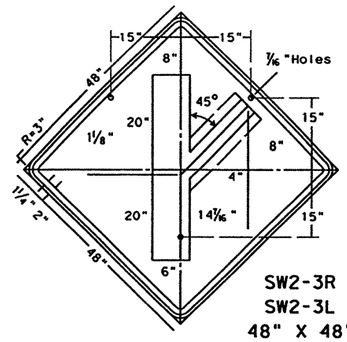

SW2-3R
SW2-3L
48" X 48"

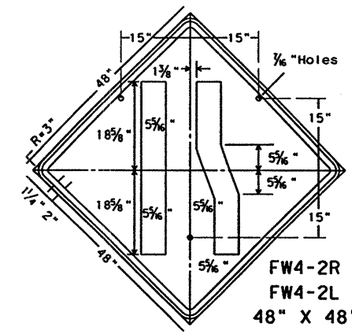

FW4-2R
FW4-2L
48" X 48"

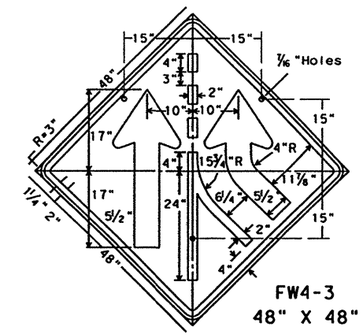

FW4-3
48" X 48"

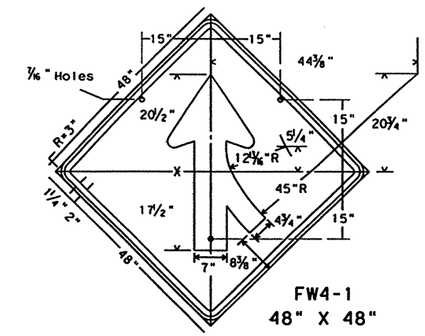

FW4-1
48" X 48"

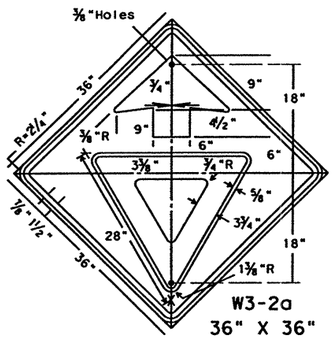

W3-2a
36" X 36"

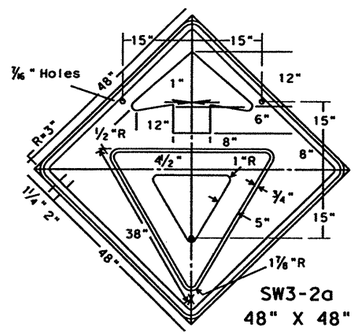

SW3-2a
48" X 48"

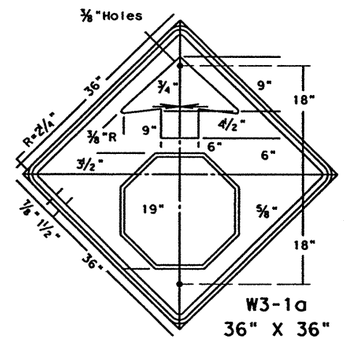

W3-1a
36" X 36"

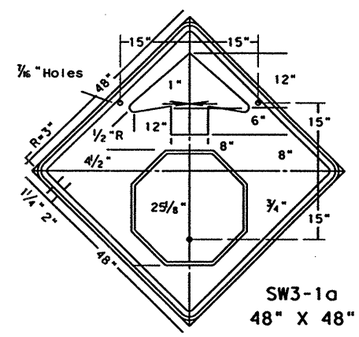

SW3-1a
48" X 48"

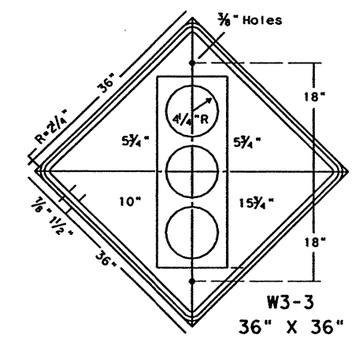

W3-3
36" X 36"

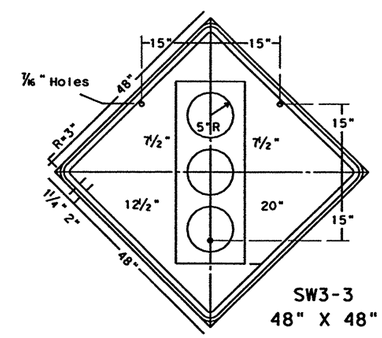

SW3-3
48" X 48"

Border and Arrow - Black
Symbol - Red Border Band on
White Background (Refl)
Background - Yellow Reflective

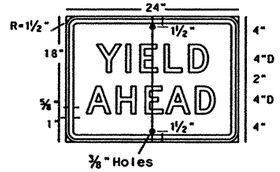

Border and Arrow - Black
Symbol - Red Border Band on
White Background (Refl)
Background - Yellow Reflective

Border and Arrow - Black
Symbol - White Border on
Red Background (Refl)
Background - Yellow Reflective

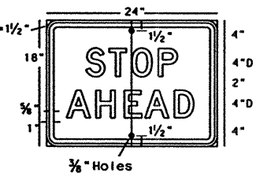

Border and Arrow - Black
Symbol - White Border on
Red Background (Refl)
Background - Yellow Reflective

Symbol and Border - Black
Top Circle - Red Reflective
Bottom Circle - Green Reflective
Background - Yellow Reflective

Symbol and Border - Black
Top Circle - Red Reflective
Bottom Circle - Green Reflective
Background - Yellow Reflective

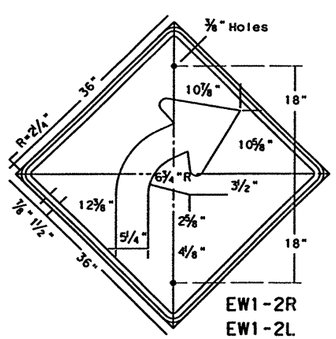

EW1-2R
EW1-2L
36" X 36"

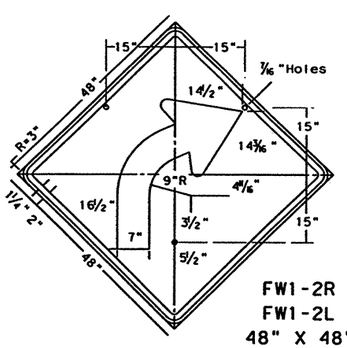

FW1-2R
FW1-2L
48" X 48"

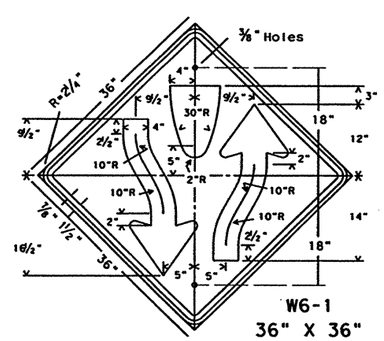

W6-1
36" X 36"

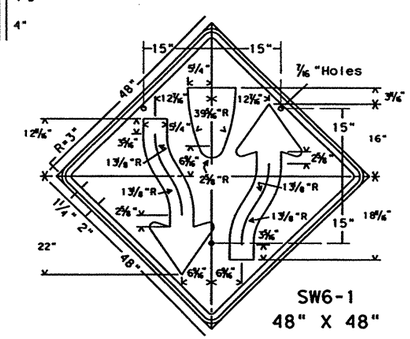

SW6-1
48" X 48"

SPECIFICATION REFERENCE TABLE	
MATERIALS AND TESTS DIVISION SPECIFICATIONS	
PLYWOOD SIGN BLANKS	D-9-7100
REFLECTIVE SHEETING, TYPE C (HIGH SPECIFIC INTENSITY)	D-9-8300
VINYL NON-REFLECTIVE DECAL SHEETING	D-9-8320

GENERAL NOTES:

The alphabets and lateral spacing between letters and numerals shall conform with the Texas "Manual on Uniform Traffic Control Devices for Streets and Highways", latest edition, and any approved changes thereto. Lateral spacing of text shall provide a balanced appearance. All materials shall conform to Department Specifications.

Legend (except where noted), shall be applied by screening process of black and/or transparent colored ink, cut-out black vinyl non-reflective decal sheeting and/or reflective sheeting or combination thereof. Background shall be yellow reflective sheeting (Type C).

Sign blanks shall be one piece 5/8 inch thick plywood (Type A), unless otherwise noted elsewhere in the plans.

ARROWHEAD DETAILS

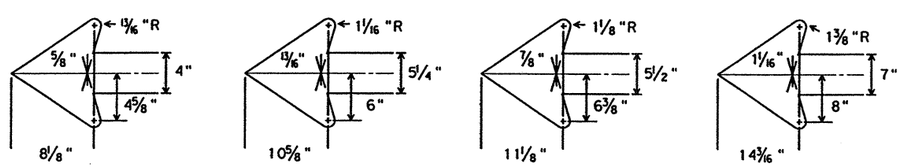

STANDARD PLANS
TEXAS DEPARTMENT OF TRANSPORTATION
Traffic Operations Division

WARNING SIGNS

W(1)-95

©TxDOT January 1981	DN-LR	CK-	DW-DN	CK-	NEG NO.:

REVISIONS	STATE DISTRICT	FEDERAL REGION	FEDERAL AID PROJECT	SHEET
1-85	22	6	NH-2002 (79)	839
7-90	COUNTY		CONTROL SECT JOB	HIGHWAY
8-95	WEBB		0018 05 062, ETC	IH 35

DN: LR
CK: CW
DW: DN
CK: MT

LEVELS
DATE:
ACC: d58hp1c/usr/d580504
FILE:

4/18/2003

HOUFILE023 \hcivil\cf0130\

b34mop96.dgn-01

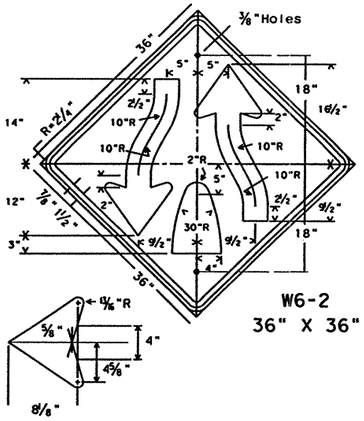

W6-2
36" X 36"

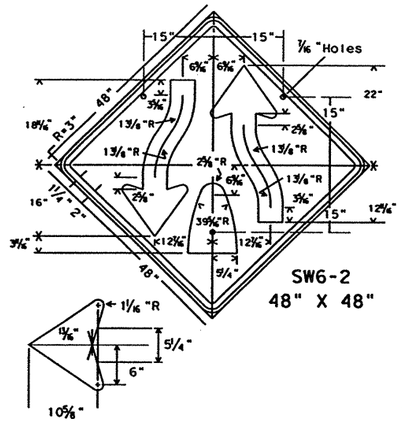

SW6-2
48" X 48"

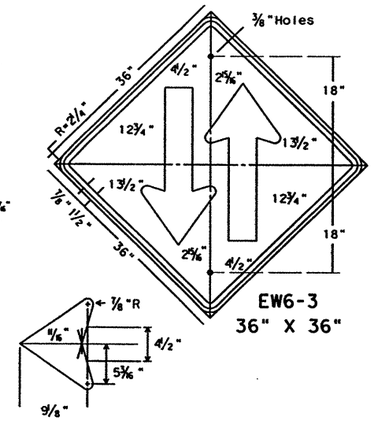

EW6-3
36" X 36"

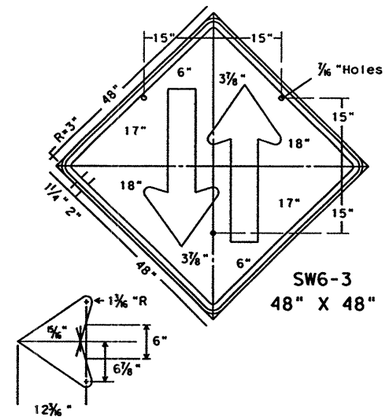

SW6-3
48" X 48"

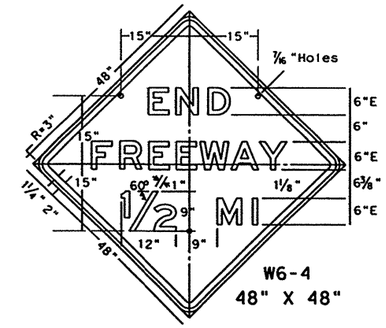

W6-4
48" X 48"

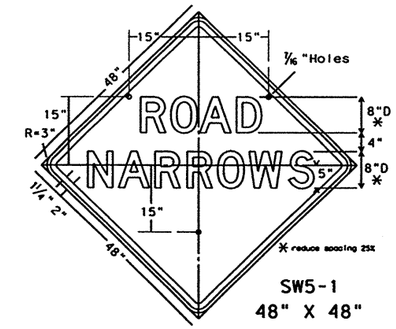

SW5-1
48" X 48"

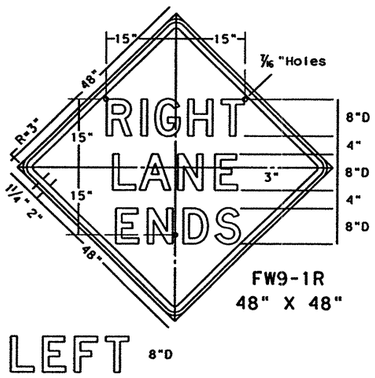

FW9-1R
48" X 48"

LEFT 8"D

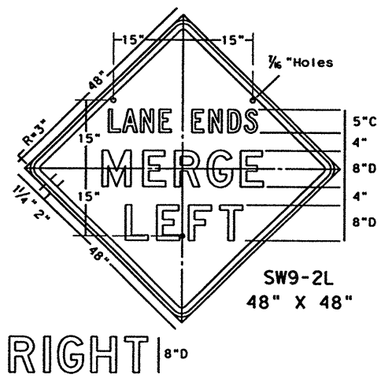

SW9-2L
48" X 48"

RIGHT 8"D

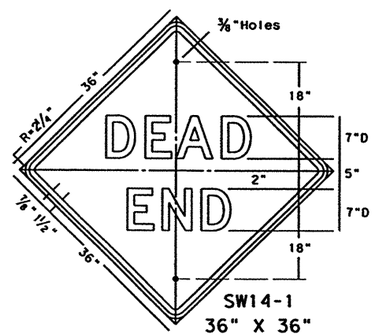

SW14-1
36" X 36"

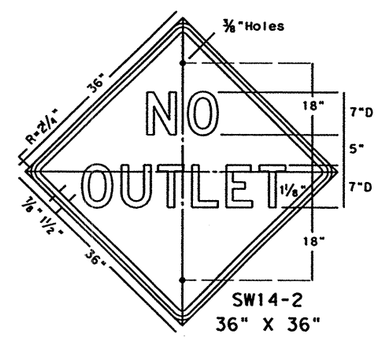

SW14-2
36" X 36"

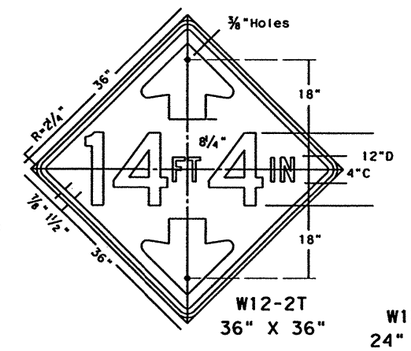

W12-2T
36" X 36"

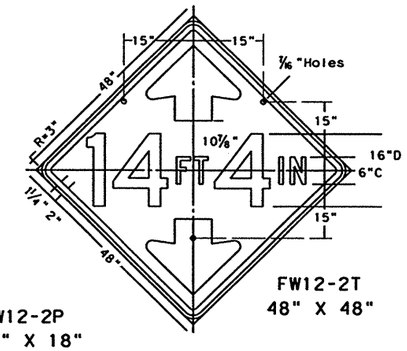

FW12-2T
48" X 48"

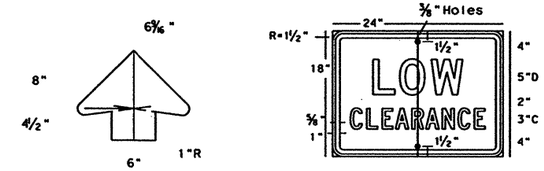

W12-2P
24" X 18"

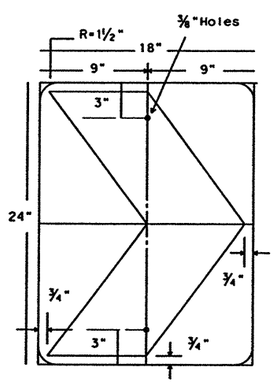

W1-8
18" X 24"

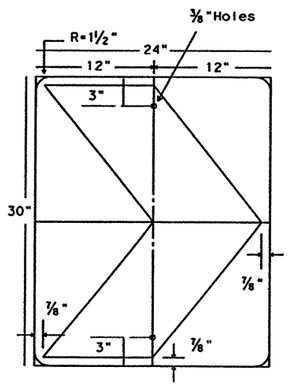

EW1-8
30" X 36"

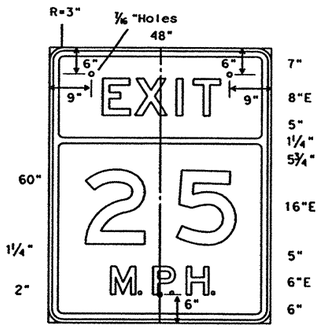

W13-2
48" X 60"

W13-3
48" X 60"
(Same as W13-2 except "EXIT replaced with "RAMP")

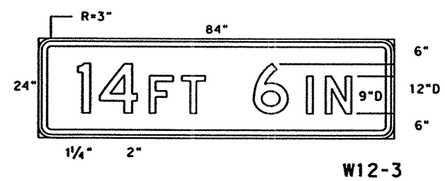

W12-3
84" X 24"

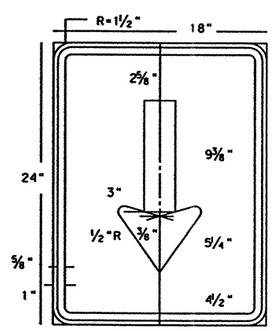

W12-3P
18" X 24"

SPECIFICATION REFERENCE TABLE

MATERIALS AND TESTS DIVISION SPECIFICATIONS	
PLYWOOD SIGN BLANKS	D-9-7100
REFLECTIVE SHEETING, TYPE C (HIGH SPECIFIC INTENSITY)	D-9-8300
VINYL NON-REFLECTIVE DECAL SHEETING	D-9-8320

GENERAL NOTES:

The alphabets and lateral spacing between letters and numerals shall conform with the Texas "Manual on Uniform Traffic Control Devices for Streets and Highways", latest edition, and any approved changes thereto. Lateral spacing of text shall provide a balanced appearance. All materials shall conform to Department Specifications.

Legend (except where noted), shall be black and applied by screening process, cut-out vinyl non-reflective decal sheeting or combination thereof. Background shall be yellow reflective sheeting (Type C).

Sign blanks shall be one piece 5/8 inch thick plywood (Type A), unless otherwise noted elsewhere in the plans.

STANDARD PLANS
TEXAS DEPARTMENT OF TRANSPORTATION
Traffic Operations Division

WARNING SIGNS

W(2)-95

©TxDOT January 1981

DN: LR	CK: -	DW: DN	CK: -	MSG NO.:

REVISIONS
1-82
1-85
7-90
8-95

STATE DISTRICT	FEDERAL REGION	FEDERAL AID PROJECT	SHEET
22	6	NH-2002 (79)	840

COUNTY	CONTROL	SECT	JOB	HIGHWAY
WEBB	0018	05	062, ETC	IH 35

DN: LR
CK: CW
DW: DN
CK: MT
DATE:
ACC: d58hp1c/usr/d580504
FILE:

LEVELS

1	2	3	4	5	6	7	8
17	18	19	20	21	22	23	24
33	34	35	36	37	38	39	40
49	50	51	52	53	54	55	56

9	10	11	12	13	14	15	16
25	26	27	28	29	30	31	32
41	42	43	44	45	46	47	48
57	58	59	60	61	62	63	

b34mop97.dgn-01 HOUFILE023 \hoivil\cf0130\ 4/18/2003

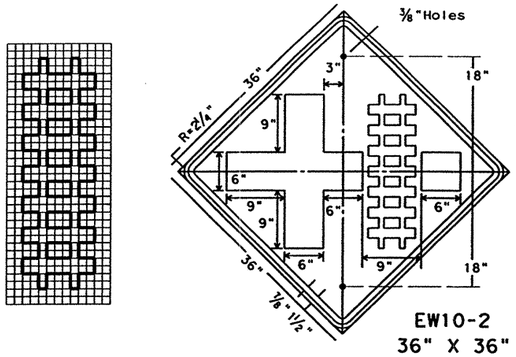

EW10-2
36" X 36"

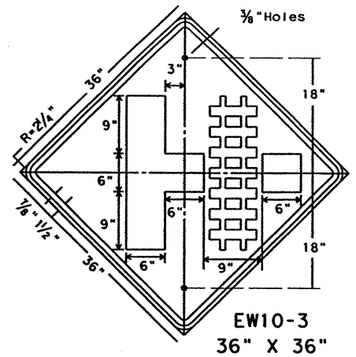

EW10-3
36" X 36"

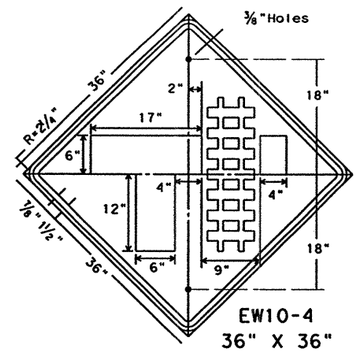

EW10-4
36" X 36"

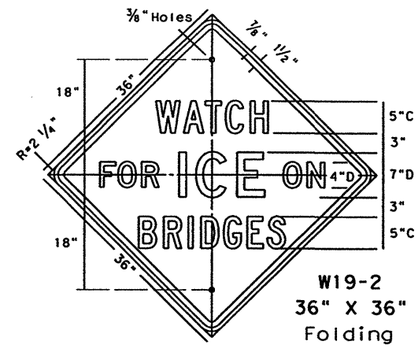

W19-2
36" X 36"
Folding

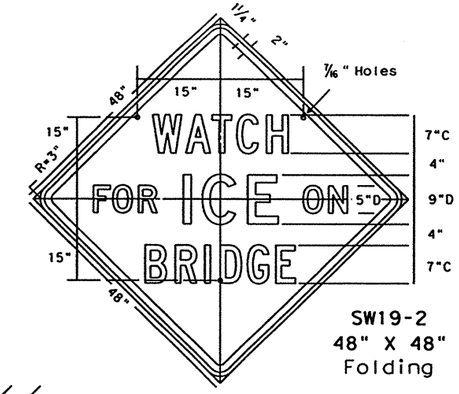

SW19-2
48" X 48"
Folding

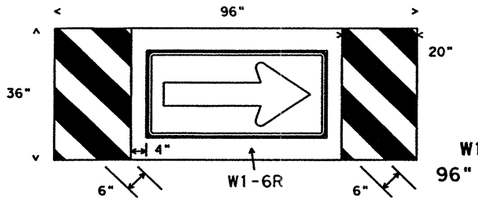

W1-9R
96" x 36"

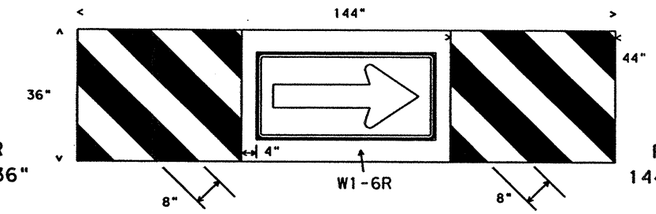

FW1-9R
144" x 36"

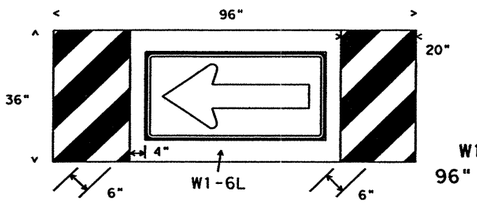

W1-9L
96" x 36"

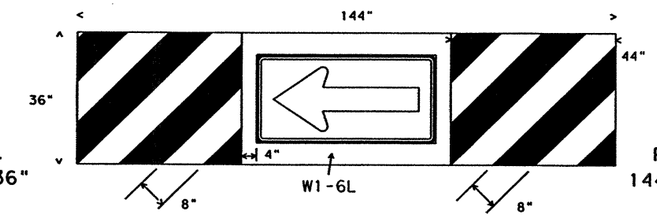

FW1-9L
144" x 36"

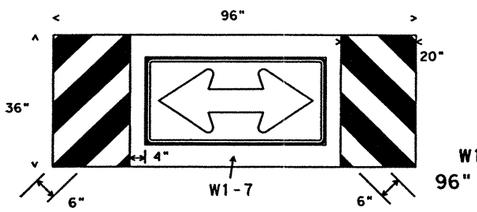

W1-10
96" x 36"

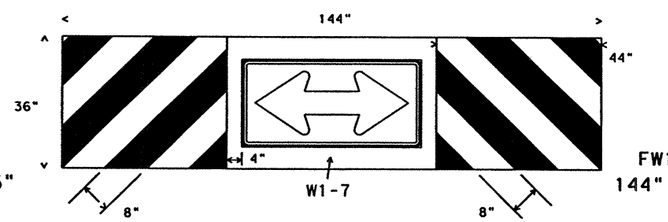

FW1-10
144" x 36"

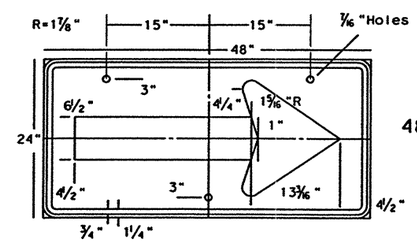

W1-6
48" X 24"

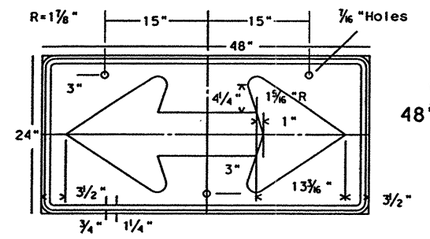

W1-7
48" X 24"

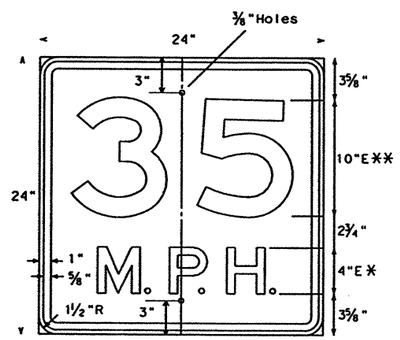

* increase spacing 100%
** optically space numerals about vert. centerline

SW13-1
24" X 24"

Speed value to be determined at the site by the Engineer.

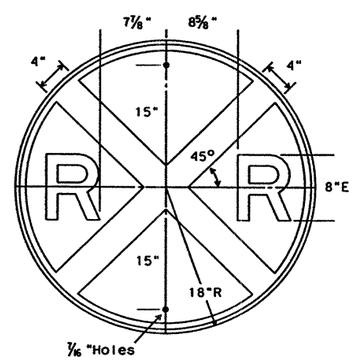

W10-1
36" Diameter

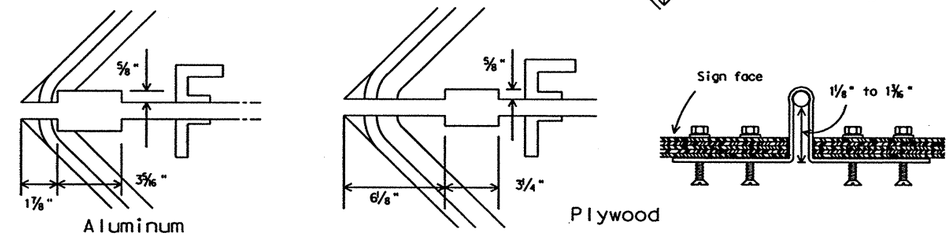

Folding Sign Hinge Details

Aluminum folding signs shall use 3" flat hinges, three per sign. The hinge slot on each half of sign is 5/8" deep by 3 5/16" wide. The sign halves are seperated by 3/32" when hinges are installed to the back of the sign with four 3/16" pop rivets. Location of hinges on the sign are as shown on above detail.

Plywood folding signs shall use 6" strap hinges, three per sign. The hinge slot on each half of sign is 5/8" deep by 3 1/4" wide. The hinges are bent with tapered side of holes on the external side, and attached to the back of sign with pivot extending through to front of sign. Attachment of each hinge will be with four each of 10x24x1" flat head screws with a tapered head shank, 5/16"x 3/16" flat washers and 3/16" bolt x 7/16" wrench hex nuts. Hinge bending and location on sign are as shown on above details.

SPECIFICATION REFERENCE TABLE
MATERIALS AND TESTS DIVISION SPECIFICATIONS

PLYWOOD SIGN BLANKS	D-9-7100
ALUMINUM SIGN BLANKS	D-9-7110

Square Ft.	Min. Thickness
Less than 7.5	0.080
7.5 to 15	0.100
Greater than 15	0.125

REFLECTIVE SHEETING, TYPE C (HIGH SPECIFIC INTENSITY)	D-9-8300
VINYL NON-REFLECTIVE DECAL SHEETING	D-9-8320

GENERAL NOTES:

The alphabets and lateral spacing between letters and numerals shall conform with the Texas "Manual on Uniform Traffic Control Devices for Streets and Highways", latest edition, and any approved changes thereto. Lateral spacing of text shall provide a balanced appearance. All materials shall conform to Department Specifications.

Legend (except where noted), shall be black and applied by screening process, cut-out vinyl non-reflective decal sheeting or combination thereof. Background shall be yellow reflective sheeting (Type C).

Sign blanks shall be fabricated as specified in the plans of one piece 5/8 inch thick plywood (Type A) or one piece aluminum alloy (Type A) of the approved thickness.

Large arrow signs W1-9, W1-10, FW1-9 and FW1-10 shall be composed of a standard W1-6 or W1-7 sign attached directly to the background material.

STANDARD PLANS
TEXAS DEPARTMENT OF TRANSPORTATION
Traffic Operations Division

WARNING SIGNS

W(3)-95

©TxDOT July 1990

DN: LR	CK: -	DW: DN	CK: -	NEG NO.:

REVISIONS
8-90
8-95

STATE DISTRICT	FEDERAL REGION	FEDERAL AID PROJECT	SHEET
22	6	NH-2002 (79)	841

COUNTY	CONTROL	SECT	JOB	HIGHWAY
WEBB	0018	05	062, ETC	IH 35

DN: LR
CK: CW
DW: DN
CK: MT

DATE:
ACC: d58hplc/usr/d580504
FILE:

LEVELS
1 2 3 4 5 6 7 8
7 8 9 10 11 12 13 14
33 34 35 36 37 38 39 40
49 50 51 52 53 54 55 56

REVISED
1 2 3 4 5 6 7 8 9 10 11 12 13 14 15 16
17 18 19 20 21 22 23 24 25 26 27 28 29 30 31 32
33 34 35 36 37 38 39 40 41 42 43 44 45 46 47 48
49 50 51 52 53 54 55 56 57 58 59 60 61 62 63

4/18/2003
HOUFILE023 \hcivil\cf0130\
b34mop98.dgn-01

OBJECT MARKER TYPES 1 and 4

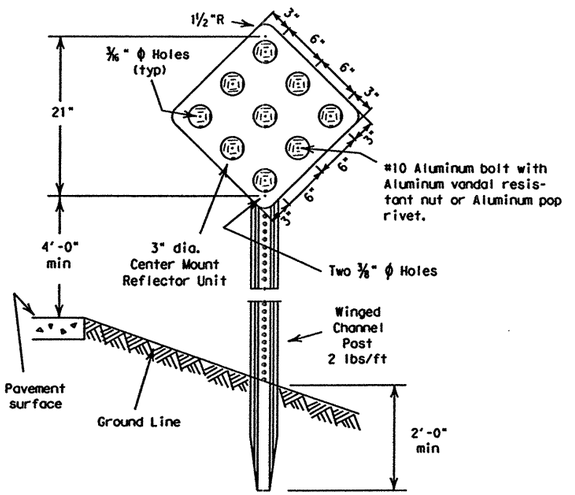

TYPE 1 and 4 Object Markers shall consist of Type (B) Center Mount Reflector Units mounted on 0.080" thick sheet aluminum conforming with ASTM B-209 Alloy 6061-T6.

TYPE 1 OM-1R

18" x 18"
Reflector Unit - YELLOW
Background - (YELLOW - Non-Reflective)

TYPE 4 OM-4R

18" x 18"
Reflector Unit - RED
Background - (RED - Non-Reflective)

OBJECT MARKER TYPE 3

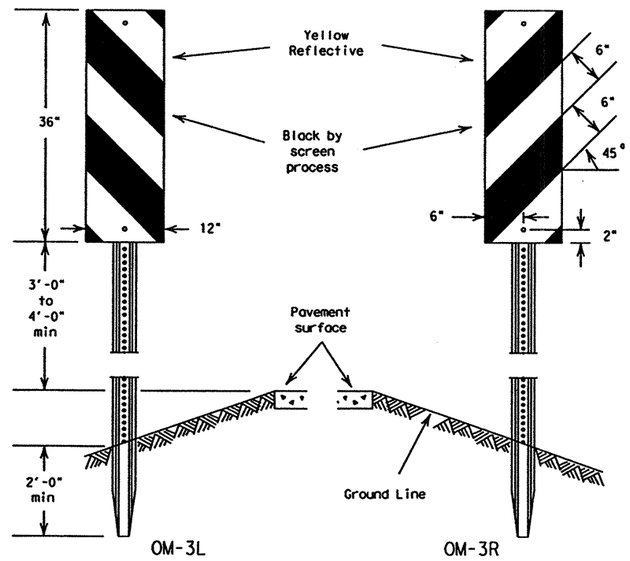

Sign blank to be .080" thick sheet aluminum conforming to ASTM B-209 Alloy 6061-T6.

Reflective sheeting shall be in accordance with Departmental Material Specification, D-9-8300, Type C.

TYPICAL REFLECTOR UNITS

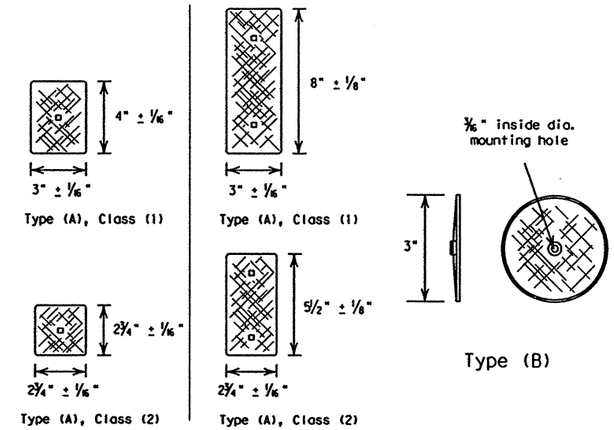

Type (A) - Reflective sheeting with pressure sensitive backing. For certain (non-flexible post) applications, reflective sheeting may be directly applied to approved metal, plastic or fiberglass backplate with 17/64" square mounting hole.

It is the contractor's option to provide Class (1) or Class (2) reflective sheeting in accordance with Departmental Material Specification D-9-8600. All reflector units per delineator or object marker shall be of the same type and class of reflective sheeting.

Type (B) - Centermount acrylic plastic prismatic reflector.

SPECIFICATION REFERENCE TABLE

MATERIALS AND TESTS DIVISION SPECIFICATIONS	
FLEXIBLE DELINEATOR & OBJECT MARKER POSTS (DRIVEABLE & SURFACE MOUNT TYPES)	D-9-4400
FLAT SURFACE REFLECTIVE SHEETING, TYPE C (HIGH SPECIFIC INTENSITY)	D-9-8300
NON-REFLECTIVE BACKGROUND COATING	D-9-8500
DELINEATOR AND OBJECT MARKER	D-9-8600

GENERAL NOTES:

1) Delineators shall be uniformily placed not less than 2 feet nor more than 8 feet from the edge of shoulder or the face of unmountable curb. They may be placed in line with guardrail where guardrail is used.
2) Object markers shall be located at points designated on the plan.
   When used for marking objects in the roadway or 8 feet or less from the shoulder or curb, the mounting height to the bottom of the object marker should normally be 4 feet above the surface of the nearest traffic lane. When used to mark objects more than 8 feet from the shoulder or curb, the mounting height to the bottom of the object marker may be 4 feet above the ground line.
   When object markers or markings are applied to a hazardous object which by its nature required a lower or higher mounting, the vertical mounting height may vary according to need.
3) Hardware shall be galvanized steel, stainless steel, or aluminum, except as noted.
4) Posts for supporting delineators and Type 2 object markers shall be 1.12 lbs/ft winged channel.
5) Type 1, 3 and 4 object marker posts shall be 2 lbs/ft winged channel.
6) Delineator and object markers shall be in accordance with Department Material Specification D-9-8600.

OBJECT MARKERS TYPE 2

YELLOW (R-reflector unit, P-panel)

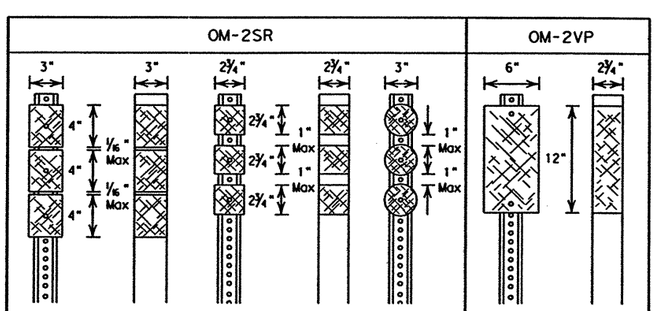

Type	A				B	A	
Class	1	1	2	2	n/a	1	2
Post	WC	FLEX	WC	FLEX	WC	WC	FLEX

ALL REFLECTOR UNITS ARE YELLOW
WC-wing channel post (1.12 lbs/ft)
FLEX-flexible post (driveable and semi-driveable)

DELINEATORS

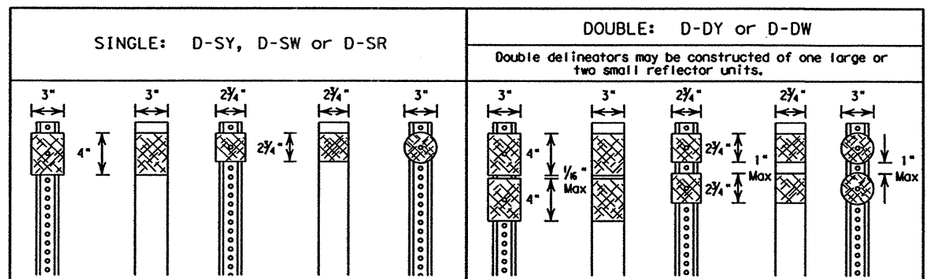

Type	A				B	A				B
Class	1	1	2	2	n/a	1	1	2	2	n/a
Post	WC	FLEX	WC	FLEX	WC	WC	FLEX	WC	FLEX	WC

Length of post may vary to meet field conditions.

REFLECTOR UNITS: W-white, Y-yellow, R-red
WC-wing channel post (1.12 lbs/ft)
FLEX-flexible post (driveable and semi-driveable)

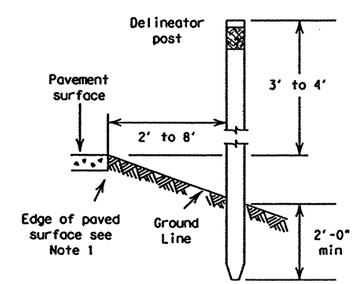

TYPICAL INSTALLATION

STANDARD PLANS
TEXAS DEPARTMENT OF TRANSPORTATION
Traffic Operations Division

DELINEATORS & OBJECT MARKERS

(1 of 2) D & OM(1)-95

©TxDOT January 1981

DN: LR	CK:	DW: DN	CK:	MCG NO.:

REVISIONS
1-82
4-92
8-95

STATE DISTRICT	FEDERAL REGION	FEDERAL AID PROJECT	SHEET
22	6	NH-2002 (79)	842

COUNTY	CONTROL	SECT	JOB	HIGHWAY
WEBB	0018	05	062, ETC	IH 35

DISCLAIMER
The use of this standard is governed by the "Texas Engineering Practice Act". No warranty of any kind is made by TxDOT for any purpose whatsoever. TxDOT assumes no responsibility for the conversion of this standard to other formats or for incorrect results or damages resulting from its use.

ACC:
S DISPLAYED

DISCLAIMER
The use of this standard is governed by the "Texas Engineering Practice Act". No warranty of any kind is made by TxDOT for any purpose whatsoever. TxDOT assumes no responsibility for the conversion of this standard to other formats or for incorrect results or damages resulting from its use.

PLAN VIEW OF BIDIRECTIONAL MOUNTING

For Single Delineators Only

Post oriented as directed by Engineer

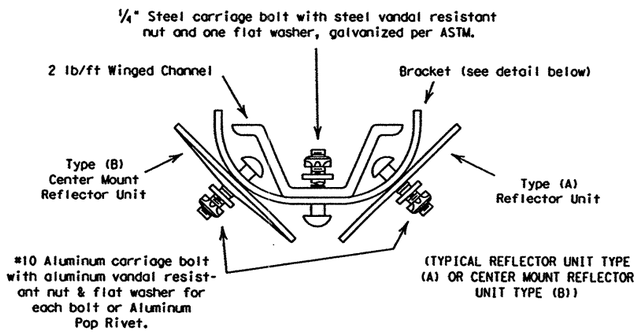

BIDIRECTIONAL BRACKET

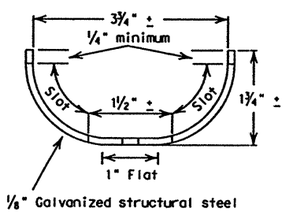

PLAN VIEW

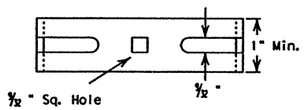

ELEVATION

Strap Length = 6" Min.

DELINEATORS FOR CURVES OR TANGENT SECTIONS

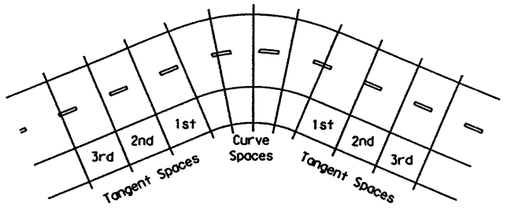

The delineator spacing, S, on the curve is found from the formula $S=3\sqrt{R-50}$, where R is the radius of the curve in feet. The first spaces immediately in advance of and beyond the curve are 2.0xS, the second spaces are 3.0xS, and the third spaces are 6.0xS but not to exceed 300 feet. Distance for spaces rounded to nearest 5 feet.

Spacing for Highway Delineators on Horizontal Curve

Degree of Curve	Radius on Curve	Spacing on Curve	Spacing in Advance of and Beyond Curves		
			First Space	Second Space	Third Space
	Feet	Feet	Feet	Feet	Feet
1	5730	225	300	300	300
2	2865	160			
3	1910	130	260		
4	1433	110	225		
5	1146	100	200		
6	955	90	185	275	
7	819	85	165	250	
8	716	75	155	230	
9	637	75	145	220	
10	573	70	135	205	
11	521	65	130	195	
12	478	60	125	185	

FLEXIBLE POSTS

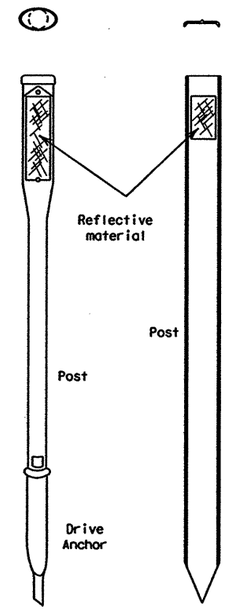

Driveable or Semi-Driveable Delineator Posts

Install to manufacturer's recommendations

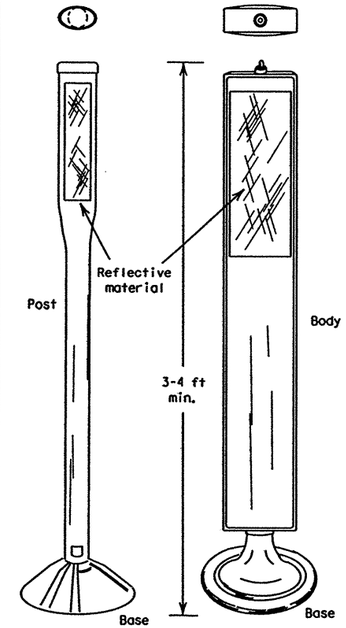

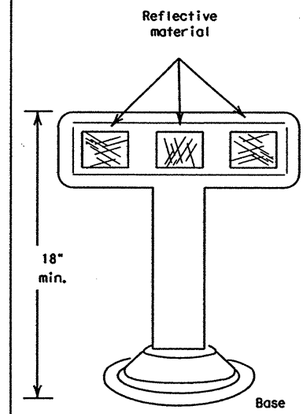

K Marker

Pavement Surface Mount

Surface mounted delineator posts may use epoxy, or hot bituminous adhesive to mount post to flat surface.

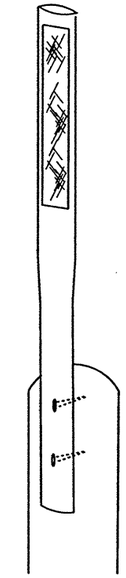

Guardrail Post Surface Mount

PLAN VIEW OF MONODIRECTIONAL MOUNTINGS

For Single and Double Delineators and Object Marker types OM-2YP(a) & OM-2SR

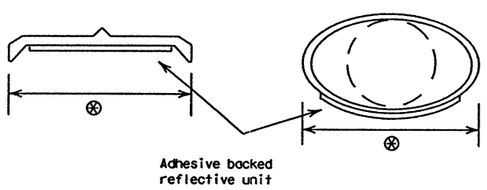

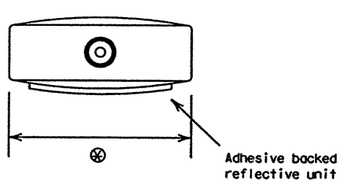

⊗ Not less than 3 1/4".

Various Cross Sections may be furnished if projected width of reflective unit appears to be 3" ± 3/8".

BREAK AWAY CHANNEL POST

For Object Marker Types 1,3 and 4

(where specified in the plans)

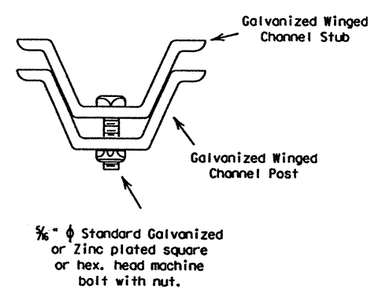

PLAN VIEW

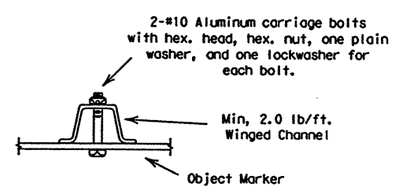

Length of post may vary to meet field conditions.

PLAN VIEW

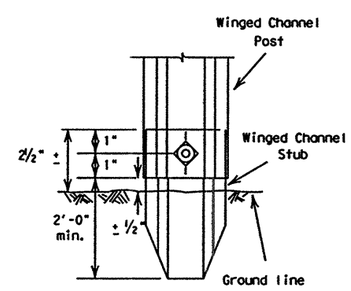

PARTIAL ELEVATION

STANDARD PLANS
TEXAS DEPARTMENT OF TRANSPORTATION
Traffic Operations Division

DELINEATORS & OBJECT MARKERS

(2 of 2) D & OM(2)-95

©TxDOT January 1981	DN-LR	CK:-	DN-DN	CK:-	NEG NO.:

REVISIONS	STATE DISTRICT	FEDERAL REGION	FEDERAL AID PROJECT	SHEET
2-82 4-92 8-95	22	6	NH-2002 (79)	843

COUNTY	CONTROL	SECTION	JOB	HIGHWAY
WEBB	0018	05	062, ETC	IH 35

b34mp100.dgn-01 HOUFILE023 \hcivil\cf0130\ 4/18/2003

FILES DISPLAYED
1 2 3 4 5 6 7 8 9 10 11 12 13 14 15 16
17 18 19 20 21 22 23 24 25 26 27 28 29 30 31 32
33 34 35 36 37 38 39 40 41 42 43 44 45 46 47 48
49 50 51 52 53 54 55 56 57 58 59 60 61 62 63
ACC:

DISCLAIMER
The use of this standard is governed by the "Texas Engineering Practice Act". No warranty of any kind is made by TxDOT for any purpose whatsoever. TxDOT assumes no responsibility for the conversion of this standard to other formats or for incorrect results or damages resulting from its use.

TRAFFIC LANE LINES PAVEMENT MARKING DETAILS

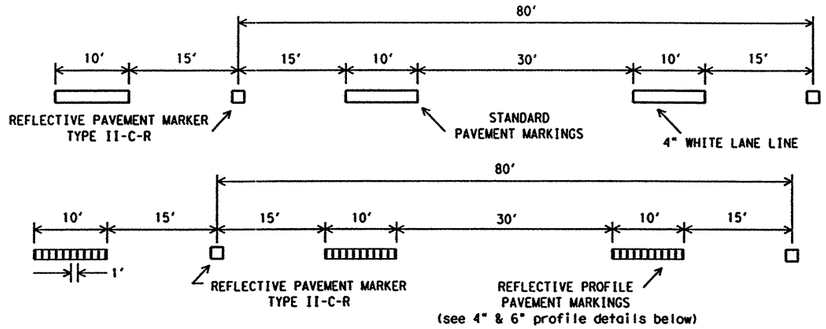

PAVEMENT MARKERS (REFL) TYPE II-C-R SHOULD BE SPACED ON 80' CENTERS WITH THE CLEAR FACE TOWARD NORMAL TRAFFIC AND THE RED FACE TOWARD WRONG WAY TRAFFIC. AS REQUIRED BY THE ENGINEER OR SHOWN ELSEWHERE IN THE PLANS, TYPE II-C-R MAY BE PLACED ON 40 FOOT CENTERS FOR THE BELOW LISTED CONDITIONS:

1. horizontal curves,
2. continuously illuminated sections,
3. high volume roadways
4. or roadways where safety concerns exist.

EDGELINE PAVEMENT MARKINGS

EDGELINES SHOULD TYPICALLY BE 4" WIDE AND THE MATERIALS SHALL BE AS SPECIFIED IN THE PLANS. IF RAISED PROFILE PAVEMENT MARKINGS ARE USED SEE DETAILS BELOW.

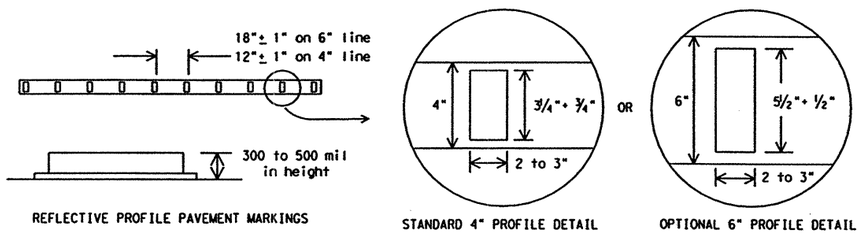

WRONG WAY ARROW DETAIL

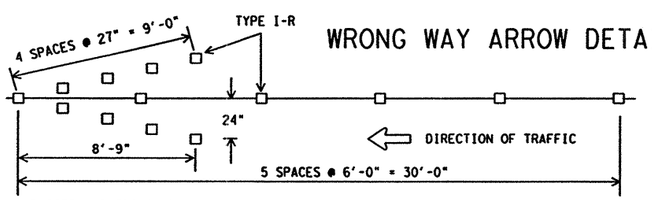

ALL RAISED MARKERS IN THE WRONG WAY ARROW SHALL BE TYPE I-R REFLECTORIZED PAVEMENT MARKERS WITH THE REFLECTORIZED SURFACE FACING THE WRONG WAY TRAFFIC. TYPE II-C-R SHALL NOT BE USED.

REFLECTORIZED WRONG WAY ARROWS, NOT TO EXCEED TWO, MAY BE PLACED ON EXIT RAMPS. LOCATION OF THE ARROWS SHALL BE AS SHOWN IN THE PLANS OR AS DIRECTED BY THE ENGINEER.

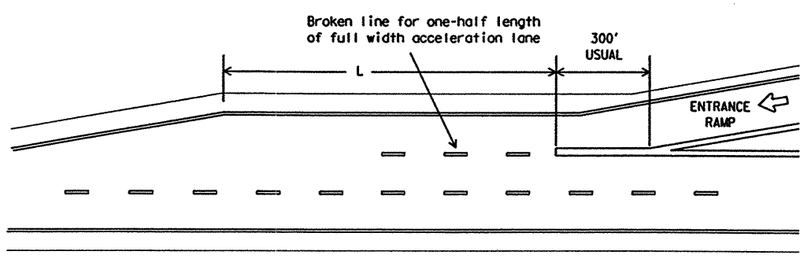

PARALLEL ACCELERATION LANE

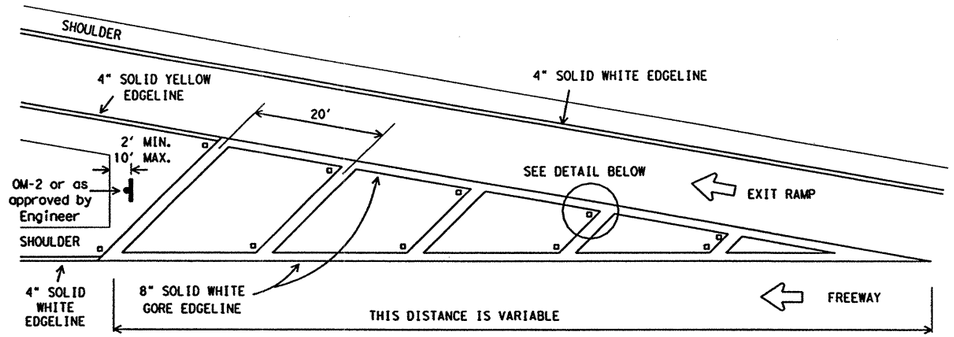

THE SHAPE OF THE GORE MARKING WILL VARY DEPENDING ON THE RAMP DESIGN AND WILL BE AS SHOWN IN THE PLANS OR AS DIRECTED BY THE ENGINEER. OM-2 OR SURFACE MOUNT OBJECT MARKER MOUNTING HEIGHT IS 36 INCHES.

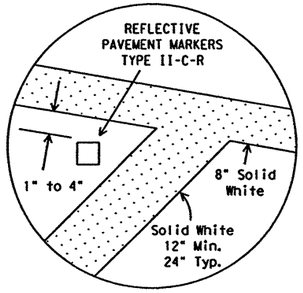

TYPICAL EXIT RAMP GORE MARKING

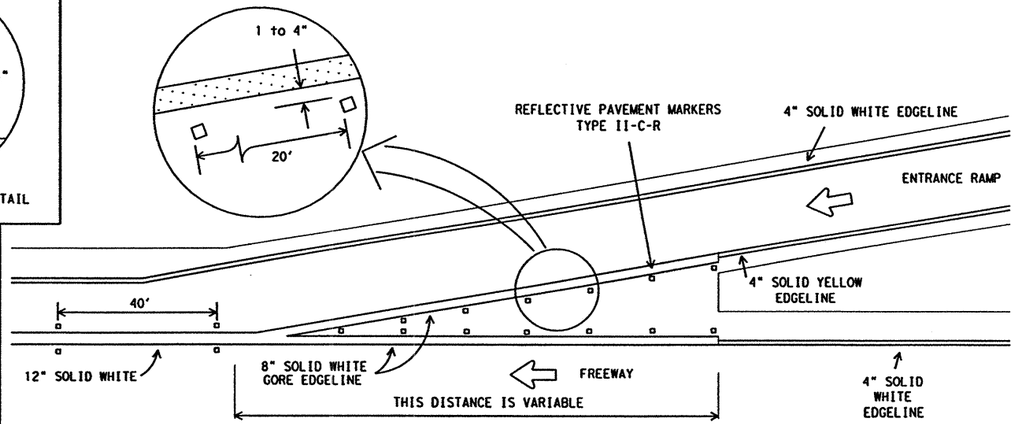

TYPICAL ENTRANCE RAMP GORE MARKING

EXTEND THE EDGELINE FROM RAMP UNTIL IT INTERSECTS WITH EDGELINE FROM MAIN LANES

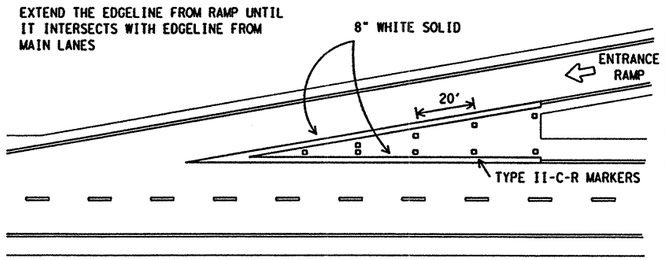

TAPERED ACCELERATION LANE

All pavement marking materials shall meet the required Departmental Material Specifications as specified by the plans.

SPECIFICATION REFERENCE TABLE

MATERIAL SPECIFICATIONS	
PAVEMENT MARKERS (REFLECT.)	DMS-4200
EPOXY	DMS-6100
BITUMINOUS ADHESIVE FOR PAVE. MKS.	DMS-6130

RAISED PAVEMENT MARKERS

(REFLECTORIZED)

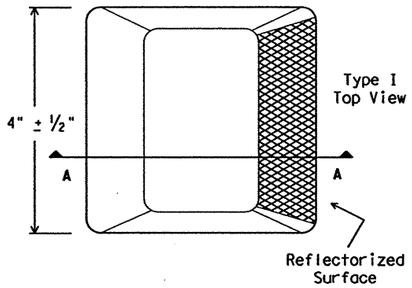

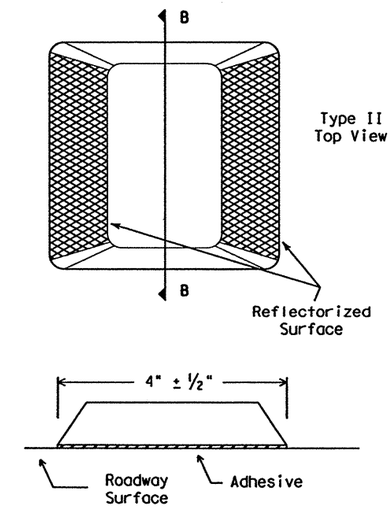

STANDARD PLANS
Texas Department of Transportation
Traffic Operations Division

TYPICAL STANDARD FREEWAY PAVEMENT MARKINGS WITH RAISED PAVEMENT MARKERS

FPM(1)-00A

©TxDOT May 1974	DN: BAS	CK: GRB	DR: FDN	CK: CAL
REVISIONS 12-90 4-92 5-00 8-00	STATE DISTRICT 22	FEDERAL REGION 6	FEDERAL AID PROJECT NH-2002 (79)	SHEET 844
COUNTY WEBB	CONTROL 0018	SECTION 05	JOB 062, ETC	HIGHWAY IH 35

DISPLAYED
1 2 3 4 5 6 7 8 9 10 11 12 13 14 15 16
17 18 19 20 21 22 23 24 25 26 27 28 29 30 31 32
33 34 35 36 37 38 39 40 41 42 43 44 45 46 47 48
49 50 51 52 53 54 55 56 57 58 59 60 61 62 63

ACC:

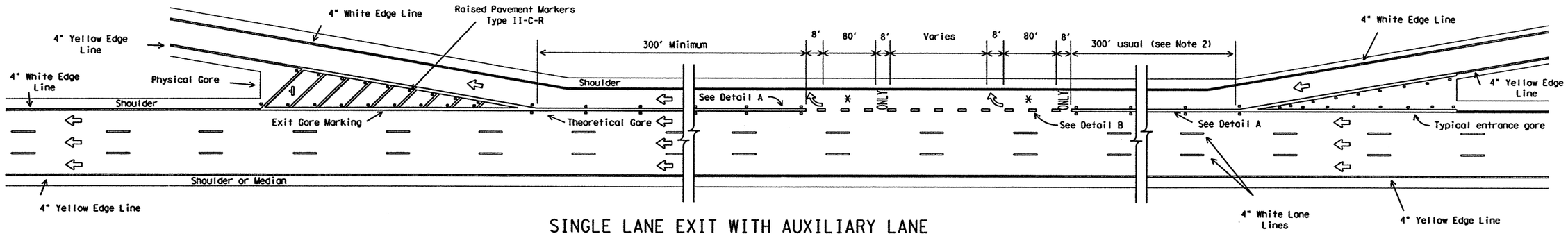

SINGLE LANE EXIT WITH AUXILIARY LANE

(See Note 5)

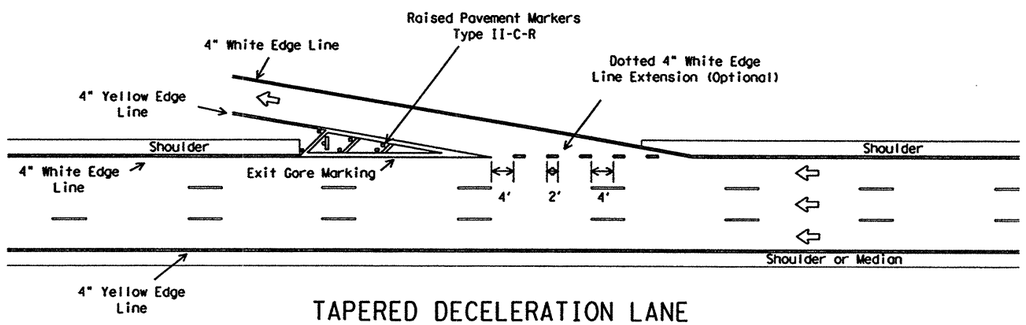

TAPERED DECELERATION LANE

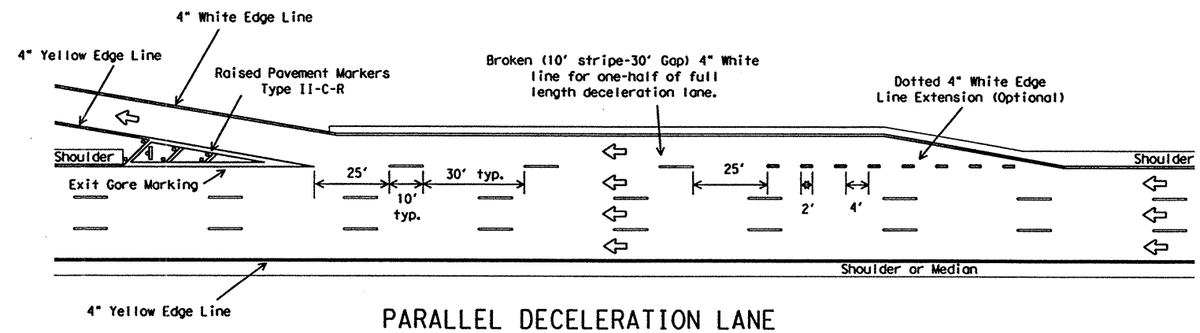

PARALLEL DECELERATION LANE

LEGEND

- OM-2, or approved surface mount object marker installed 2 to 10 feet from Physical Gore. Mounting height is approximately 36 inches.
- Denotes direction of traffic.
- Pavement marking arrows (white).
- Arrow markings are optional, however "ONLY" is required if arrow is used.

GENERAL NOTES:

1. Pavement markings shall be white except as otherwise noted.
2. Length of 12" white line may vary depending on location.
3. Lane drop markings are to be used to separate lanes that are required to go in different directions.
4. A lane drop (EXIT ONLY) condition is typically when the nearest entrance ramp is greater than 2000 feet upstream of the exit ramp, measured from theoretical gore of entrance ramp to theoretical gore of exit ramp.
5. All pavement marking materials shall meet the required Departmental Material Specifications as specified by the plans.

SPECIFICATION REFERENCE TABLE

MATERIAL SPECIFICATIONS	
PAVEMENT MARKERS (REFLECT.)	DMS-4200
EPOXY	DMS-6100
BITUMINOUS ADHESIVE FOR PAVE. MKS.	DMS-6130

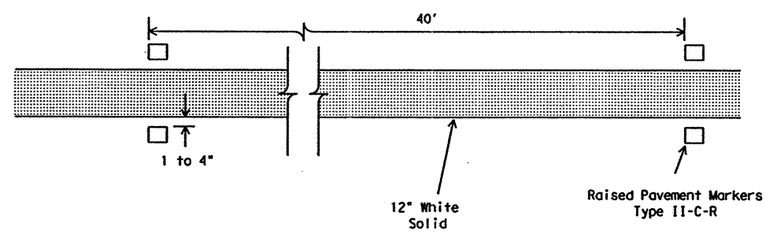

DETAIL A

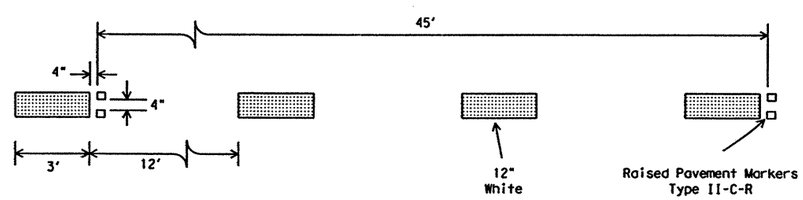

DETAIL B

STANDARD PLANS
Texas Department of Transportation
Traffic Operations Division

TYPICAL STANDARD FREEWAY PAVEMENT MARKINGS ENTRANCE AND EXIT RAMPS

FPM(2)-00A

©TxDOT February 1977 DN-BAS CK-GRB DR-FDN CK-CAL

REVISIONS	STATE DISTRICT	FEDERAL REGION	FEDERAL AID PROJECT			SHEET
4-92	22	6	NH-2002 (79)			845
8-95	COUNTY		CONTROL	SECTION	JOB	HIGHWAY
5-00	WEBB		0018	05	062	IH 35
8-00						

DISCLAIMER
The use of this standard is governed by the "Texas Engineering Practice Act". No warranty of any kind is made by TxDOT for any purpose whatsoever. TxDOT assumes no responsibility for the conversion of this standard to other formats or for incorrect results or damages resulting from its use.

DISPLAYED
1 2 3 4 5 6 7 8 9 10 11 12 13 14 15 16
17 18 19 20 21 22 23 24 25 26 27 28 29 30 31 32
33 34 35 36 37 38 39 40 41 42 43 44 45 46 47 48
49 50 51 52 53 54 55 56 57 58 59 60 61 62 63
ACC:

b34mp102.dgn-01 HOUFILE023 \hcivil\cf0130\ 4/18/2003

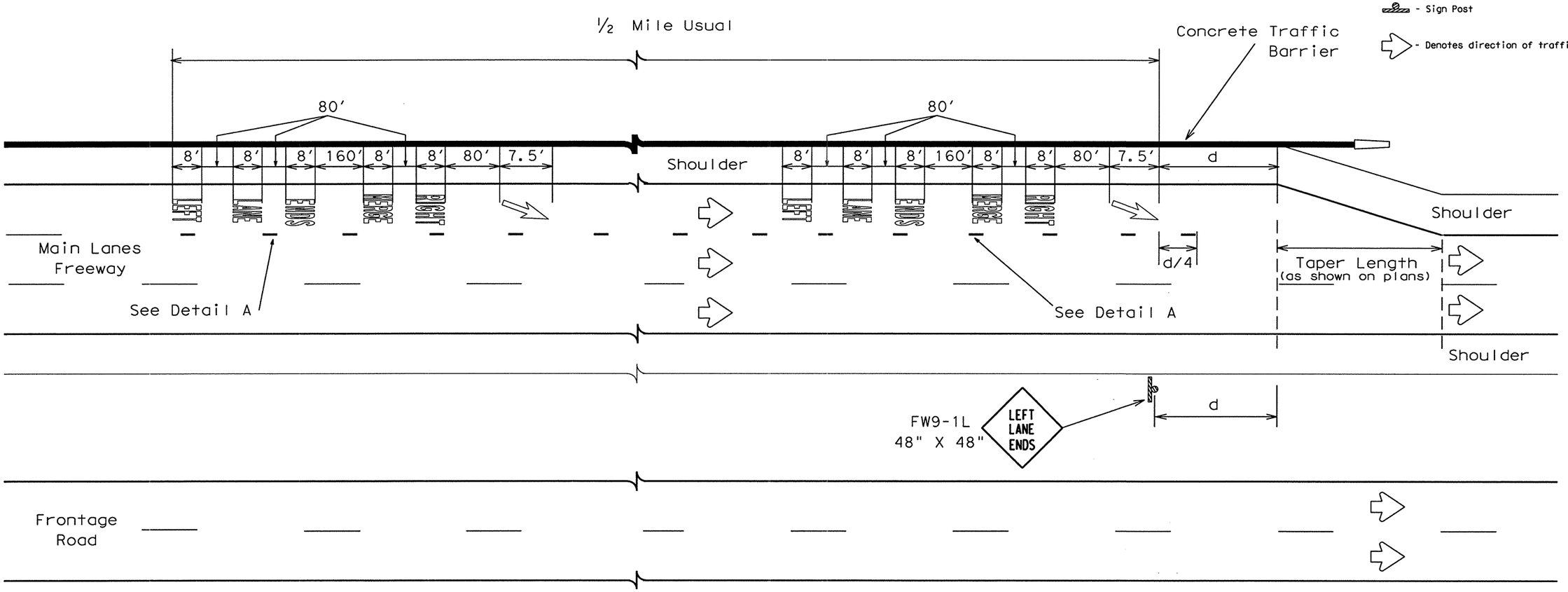

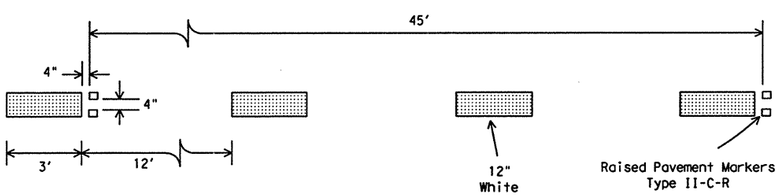

DETAIL A

Posted or 85th Percentile Speed (mph)	d (ft)
30	325
35	400
40	475
45	550
50	625
55	700
60	775
65	850
70	925

GENERAL NOTES:

1. Pavement Markings proposed in detail 'A' shall be white except as otherwise noted in the plans.
2. See PM (1,4)-03, PM (2,3)-00A and PM(5,6)-01 Standards for additional pavement marking details.

Only pre-qualified products shall be used. A list of compliant products and their sources may be obtained by writing or faxing:

Standards Engineer
Traffic Operations Division - TE
Texas Department of Transportation
125 East 11th Street
Austin, Texas 78701-2483
Phone (512) 416-3335
Fax (512) 416-3161
E-mail TRF-STANDARD@mailgw.dot.state.tx.us

STANDARD PLANS
TEXAS DEPARTMENT OF TRANSPORTATION
LAREDO DISTRICT

TYPICAL STANDARD FREEWAY PAVEMENT MARKINGS MERGE RIGHT DETAILS

DN: - RR	CK: -	DW: -	CK: -	NEG NO.:

REVISIONS	STATE DISTRICT	FEDERAL REGION	FEDERAL AID PROJECT	SHEET
	22			845A

COUNTY	CONTROL	SECTION	JOB	HIGHWAY
WEBB	0018	05	062, ETC.	IH 35

DN: CK: DW: CK:
DATE: ACC: FILE:
LEVELS

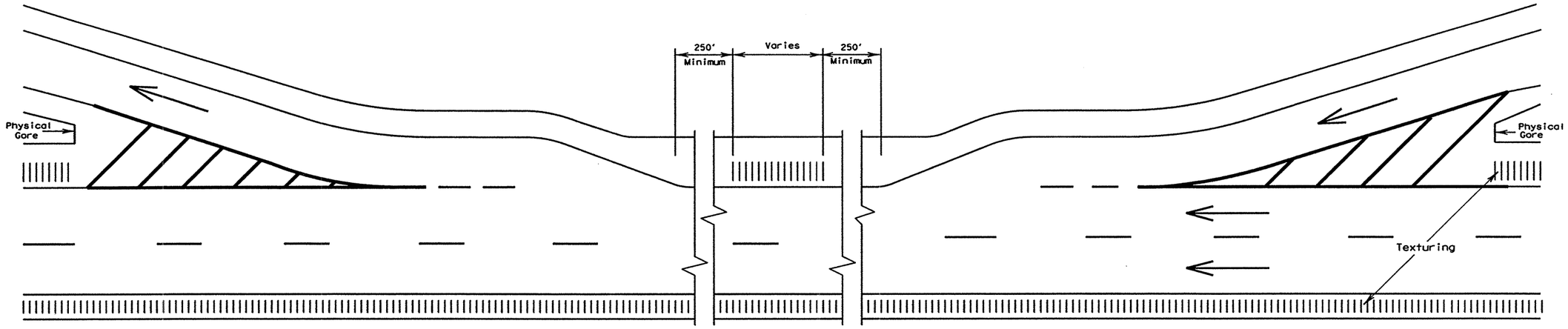

TYPICAL TEXTURING PLACEMENT AT EXIT AND ENTRANCE RAMPS

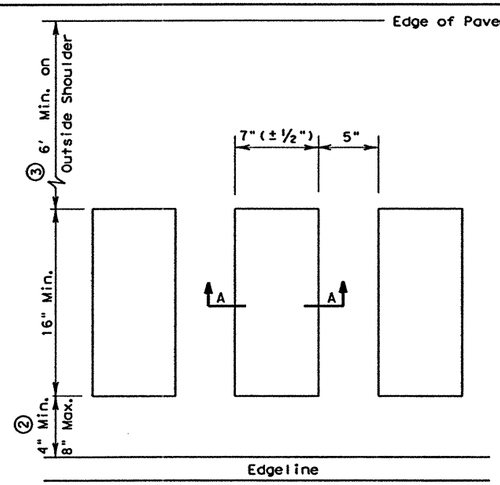

PLAN VIEW

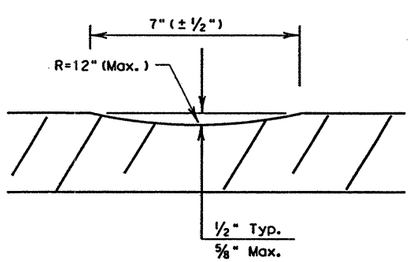

SECTION A-A

OPTION 1: CONTINUOUS MILLED DEPRESSIONS

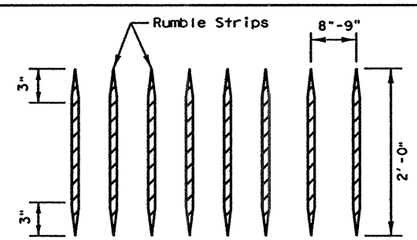

PLAN VIEW

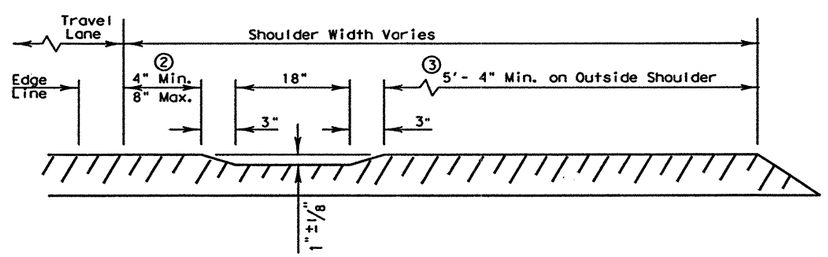

TYPICAL SECTION

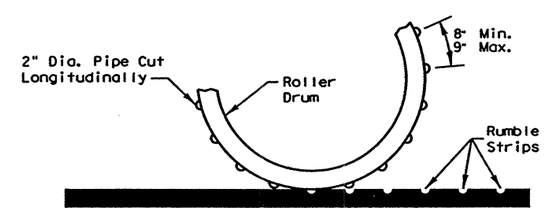

ROLLER DRUM DETAIL

OPTION 2: CONTINUOUS ROLLED DEPRESSIONS

GENERAL NOTES

① Extreme caution shall be taken at all times to avoid texturing at locations other than those designated on the plans. Texturing shall not be placed across intersecting streets, ramps, acceleration and deceleration lanes, crossovers, gore areas, or bridge decks.

② The minimum distance between the edgeline and the texturing should be used if the shoulder is less than 8 feet in width.

③ The minimum width on the outside shoulder between the rumble strip and the edge of the pavement may be reduced in special situations, such as narrower shoulders, only as directed by the Engineer.

R = Radius
D = Diameter

Not Done

Texas Department of Transportation
Design Division (Pavement)

~~DEPRESSED SHOULDER TEXTURING~~

ST(1)-99

FILE: ST199.DGN	DN: CCH	CK: MAM	DW:	CK:	NEG:	
© TxDOT JANUARY 1994	DIST	FED REG	FEDERAL AID PROJECT			SHEET
REVISIONS	22	6	NH-2002 (79)			846
	COUNTY		CONTROL	SECT	JOB	HIGHWAY
	WEBB		0018	05	062, ETC	IH 35

b34mp169.dgn-01 HOUFILE023 \hcivil\cf0130\ 4/18/2003

DISCLAIMER:
The use of this standard is governed by the "Texas Engineering Practice Act". No warranty of any kind is made by TxDOT for any purpose whatsoever. TxDOT assumes no responsibility for the conversion of this standard to other formats or for incorrect results or damages resulting from its use.

LEVELS D FED
1 3 4 5 6 7 8 9 10 11 12 13 14 15 16
17 18 19 20 21 22 23 24 25 26 27 28 29 30 31 32
33 34 35 36 37 38 39 40 41 42 43 44 45 46 47 48
49 50 51 52 53 54 55 56 57 58 59 60 61 62 63

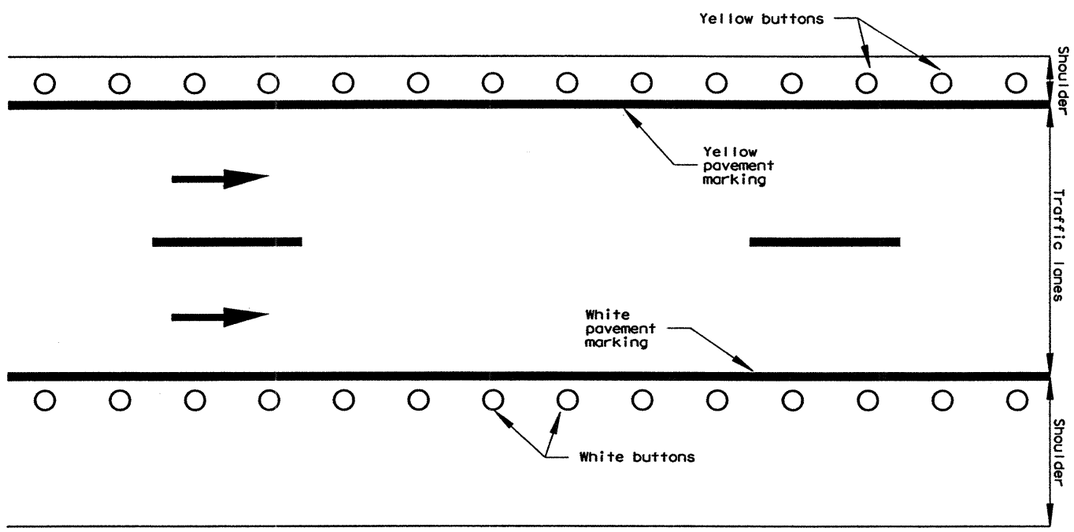

DIVIDED ROADWAY

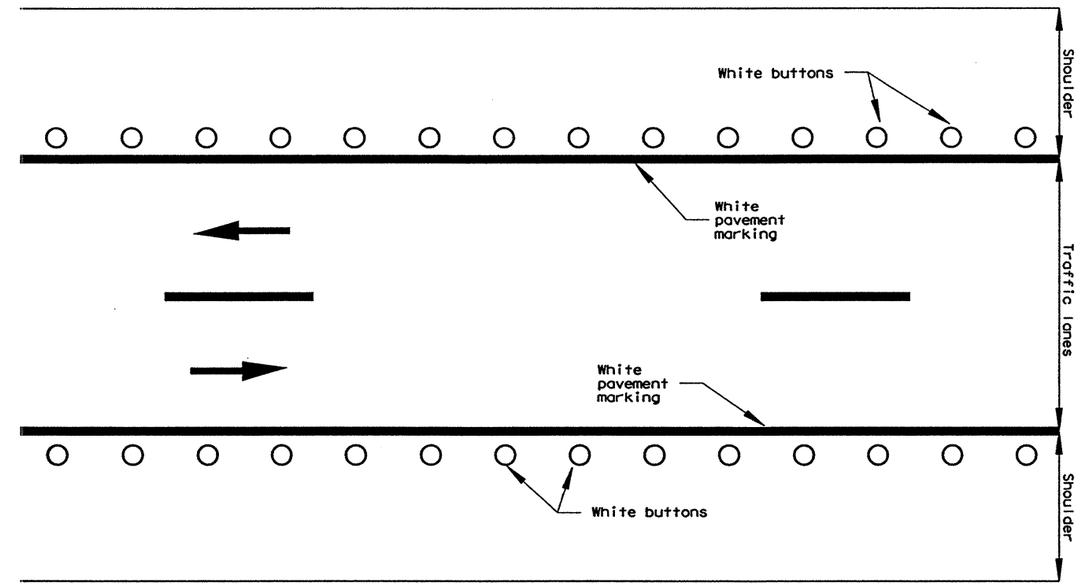

UNDIVIDED ROADWAY

PLAN VIEW

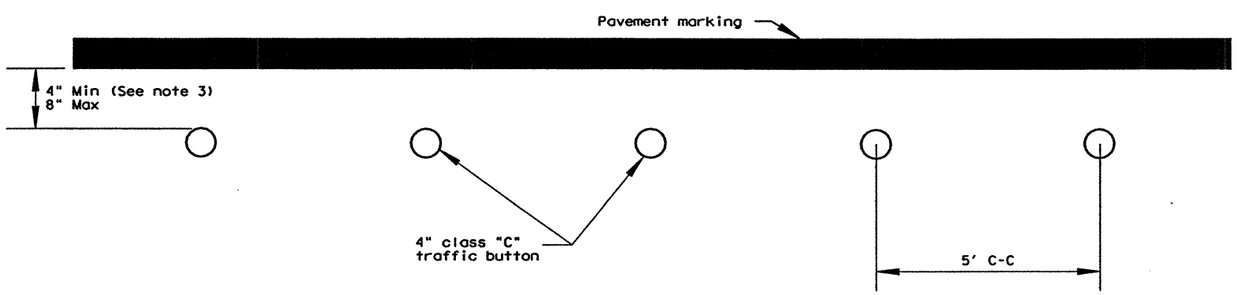

TYPICAL PLACEMENT

GENERAL NOTES

1. Buttons shall not be placed across intersecting streets, ramps, acceleration and deceleration lanes, crossovers or gore areas.
2. Specifications for traffic buttons shall be as detailed on RPM(1).
3. The minimum distance between the edgeline and the buttons should be used if the shoulder is less than 8 feet in width.
4. Raised profile thermoplastic markings used as edgelines may substitute for buttons.

R = Radius
D = Diameter

Not Done

Texas Department of Transportation
Design Division (Pavement)

~~SHOULDER TEXTURING USING PAVEMENT MARKINGS~~

ST(2)-99

FILE: ST299.DGN	DN: CCH	CK: MAM	DW:	CK:	NEG:	
©TxDOT JANUARY 1994	DIST	FED REG	FEDERAL AID PROJECT •			SHEET
REVISIONS	22	6	NH-2002 (79)			847
	COUNTY		CONTROL	SECT	JOB	HIGHWAY
	WEBB		0018	05	062, ETC	IH 35

DISCLAIMER:
The use of this standard is governed by the "Texas Engineering Practice Act". No warranty of any kind is made by TxDOT for any purpose whatsoever. TxDOT assumes no responsibility for the conversion of this standard to other formats or for incorrect results or damages resulting from its use.

LEVELS D...ED
1 3 4 5 6 7 8 9 10 11 12 13 14 15 16
17 18 19 20 21 22 23 24 25 26 27 28 29 30 31 32
33 34 35 36 37 38 39 40 41 42 43 44 45 46 47 48
49 50 51 52 53 54 55 56 57 58 59 60 61 62 63

SIGN SUPPORT DESCRIPTIVE CODES

(Descriptive Codes correspond to project estimate and quantities sheets)

SM RD SGN ASSM TY XXXXX(X)XX(X-XXXX)

Post Type

FRP = Fiberglass Reinforced Plastic Pipe (see SMD(FRP))
TWT = Thin-Walled Tubing (see SMD(TWT))
10BWG = 10 BWG Tubing (see SMD(SLIP-1) to SMD(SLIP-3))
S80 = Schedule 80 Pipe (see SMD(SLIP-1) to SMD(SLIP-3))

Number of Posts (1 or 2)

Anchor Type

UA = Universal Anchor - Concreted (see SMD(FRP) and SMD(TWT))
UB = Universal Anchor - Bolted down (see SMD(FRP) and SMD(TWT))
WA = Wedge Anchor - (see SMD(TWT))
SA = Slipbase - Concreted (see SMD(SLIP-1) to SMD(SLIP-3))
SB = Slipbase - Bolted Down (see SMD(SLIP-1) to SMD(SLIP-3))

Sign Mounting Designation

P = Prefab. "Plain" (see SMD(SLIP-1) to (3), SMD(TWT), SMD(FRP))
T = Prefab. "T" (see SMD(SLIP-1) to (3), SMD(TWT))
U = Prefab. "U" (see SMD(SLIP-1) to (3))
IF REQUIRED
1EXT or 2EXT = Number of Extensions (see SMD(SLIP-1) to (3), SMD(TWT))
BM = Extruded Wind Beam (see SMD(SLIP-1) to (3))
WC = 1.12 #/ft Wing Channel (see SMD(SLIP-1) to (3))
EXAL = Extruded Aluminum sign panels (see SMD(SLIP-3))

REQUIRED CLEARANCE FOR BREAKAWAY SUPPORT

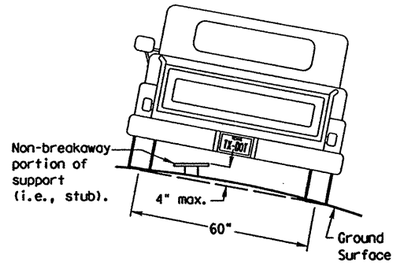

To avoid vehicle undercarriage snagging, any substantial remains of a breakaway support, when it is broken away, should not project more than 4 inches above a 60-inch chord (i.e., typical space between wheel paths).

SIGN LOCATION

PAVED SHOULDERS

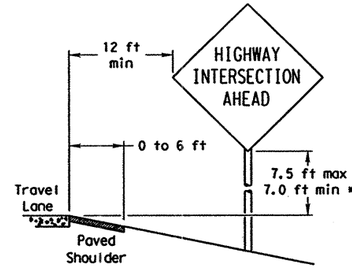

LESS THAN 6 FT. WIDE

When the shoulder is 6 ft. or less in width, the sign must be placed at least 12 ft. from the edge of the travel lane.

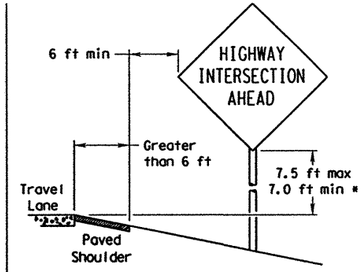

GREATER THAN 6 FT. WIDE

When the shoulder is greater than 6 ft in width, the sign must be placed at least 6 ft. from the edge of the shoulder.

BEHIND BARRIER

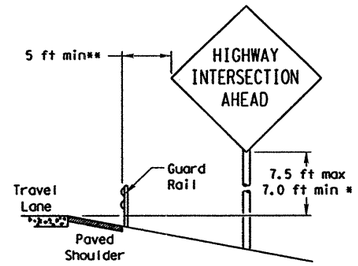

BEHIND GUARDRAIL

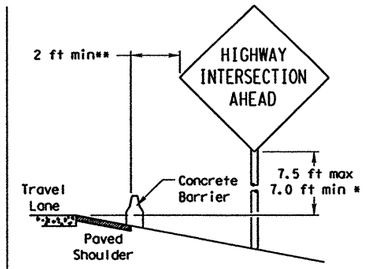

BEHIND CONCRETE BARRIER

**Sign clearance based on distance required for proper guard rail or concrete barrier performance.

T-INTERSECTION

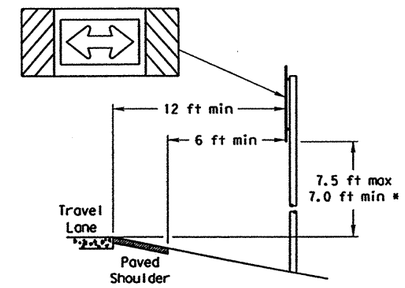

When this sign is needed at the end of a two-lane, two way roadway, the right edge of the sign should be in line with the centerline of the roadway. Place as close to ROW as practical.

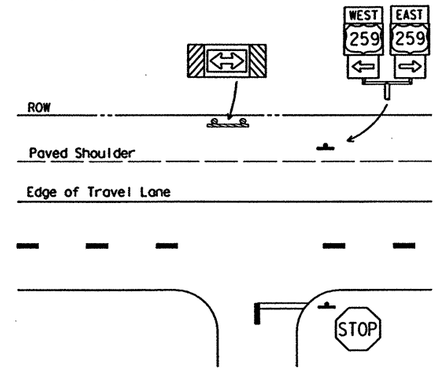

* Signs shall be mounted using the following condition that results in the greatest sign elevation:

(1) a minimum of 7 to a maximum of 7.5 feet above the edge of the travel lane or

(2) a minimum of 7 to a maximum of 7.5 feet above the grade at the base of the support when sign is installed on the backslope.

The maximum values may be increased when directed by the Engineer.

See the Traffic Operations Division website for detailed drawings of sign clamps, Texas Universal Triangular Slipbase System components and Wedge Anchor System components.

The website address is:
ftp://ftp.dot.state.tx.us/pub/txdot-info/cmd/cserve/standard/traffic/slip.pdf

No more than 2 sign posts should be located within a 7 ft. circle.

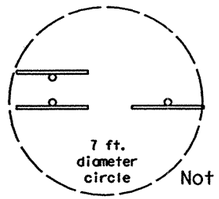

Not Acceptable

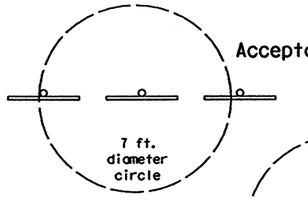

Acceptable

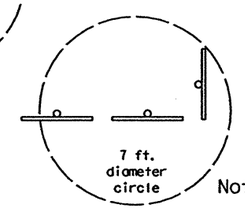

Not Acceptable

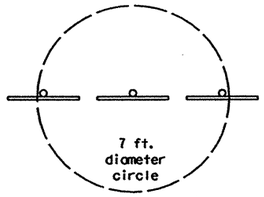

Not Acceptable

TYPICAL SIGN ATTACHMENT DETAIL

Single Signs

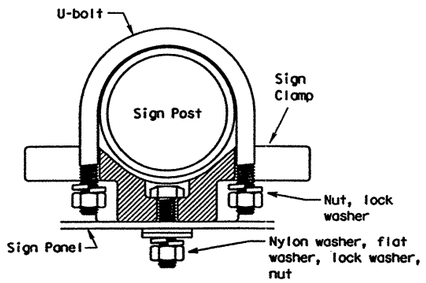

Bolts used to mount sign panels to the clamp are 5/16-18 UNC galvanized square head with nut, nylon washer, flat washer and lock washer. The bolt length is 1 inch for aluminum and 1 3/4 inch for plywood signs.

When two sign clamps are used to mount signs back-to-back, use a 5/16-18 UNC galvanized hex head per ASTM A307 with nut and helical-spring lock washer. The approximate bolt lengths for various post sizes and sign clamp types are given in the table at right. The bolt length may need to be adjusted depending upon field conditions.

Sign clamps may be either the specific size clamp or the universal clamp.

Back-to-Back Signs

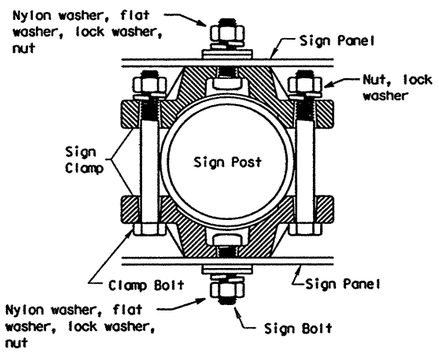

Pipe Diameter	Approximate Bolt Length	
	Specific Clamp	Universal Clamp
2" nominal	3"	3 or 3 1/2"
2 1/2" nominal	3 or 3 1/2"	3 1/2 or 4"
3" nominal	3 1/2 or 4"	4 1/2"

SIGNS WITH PLAQUES

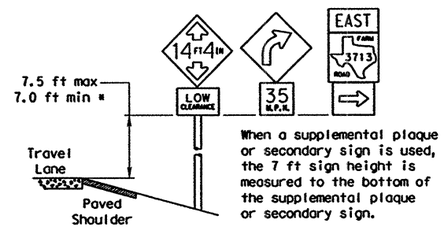

When a supplemental plaque or secondary sign is used, the 7 ft sign height is measured to the bottom of the supplemental plaque or secondary sign.

MEDIANS

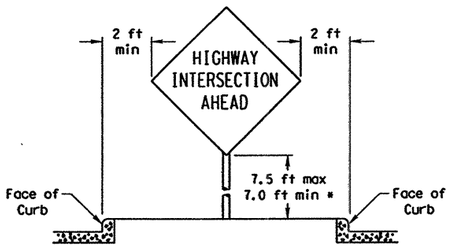

RESTRICTED RIGHT-OF-WAY

(When 6 ft min. is not possible.)

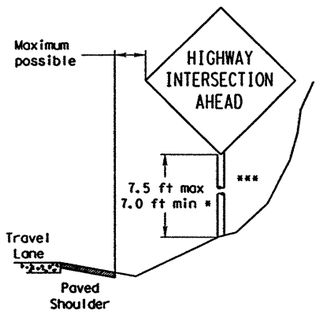

Right-of-way restrictions may be created by rocks, water, vegetation, forest, buildings, a narrow island, or other factors.

In situations where a lateral restriction prevents the minimum horizontal clearance from the edge of the travel lane, signs should be placed as far from the travel lane as practical.

*** Post may be shorter if protected by guardrail or if Engineer determines the post could not be hit due to extreme slope.

STANDARD PLANS
TEXAS DEPARTMENT OF TRANSPORTATION
Traffic Operations Division

SIGN MOUNTING DETAILS SMALL ROADSIDE SIGNS GENERAL NOTES & DETAILS

SMD(GEN)-02

©TxDOT July 2002			DN: BAS	CK: GRB	DW: FDN	CK: CAL
REVISIONS	STATE DISTRICT	FEDERAL REGION	FEDERAL AID PROJECT			SHEET
	22	6	NH-2002 (79)			848
	COUNTY		CONTROL	SECTION	JOB	HIGHWAY
	WEBB		0018	05	062, ETC	IH 35

DISPLAYED

	1	2	3	4	5	6	7	8	9	10	11	12	13	14	15	16
1																
2																
3																
4																
5																

ACC:

DISCLAIMER
The use of this standard is governed by the "Texas Engineering Practice Act". No warranty of any kind is made by TxDOT for any purpose whatsoever. TxDOT assumes no responsibility for the conversion of this standard to other formats or for incorrect results or damages resulting from its use.

b34mb161.dgn-01 HOUFILE023 \hcivil\cf0130\4/18/2003

DISCLAIMER
The use of this standard is governed by the "Texas Engineering Practice Act". No warranty of any kind is made by TxDOT for any purpose whatsoever. TxDOT assumes no responsibility for the conversion of this standard to other formats or for incorrect results or damages resulting from its use.

Texas Universal Triangular Slipbase System

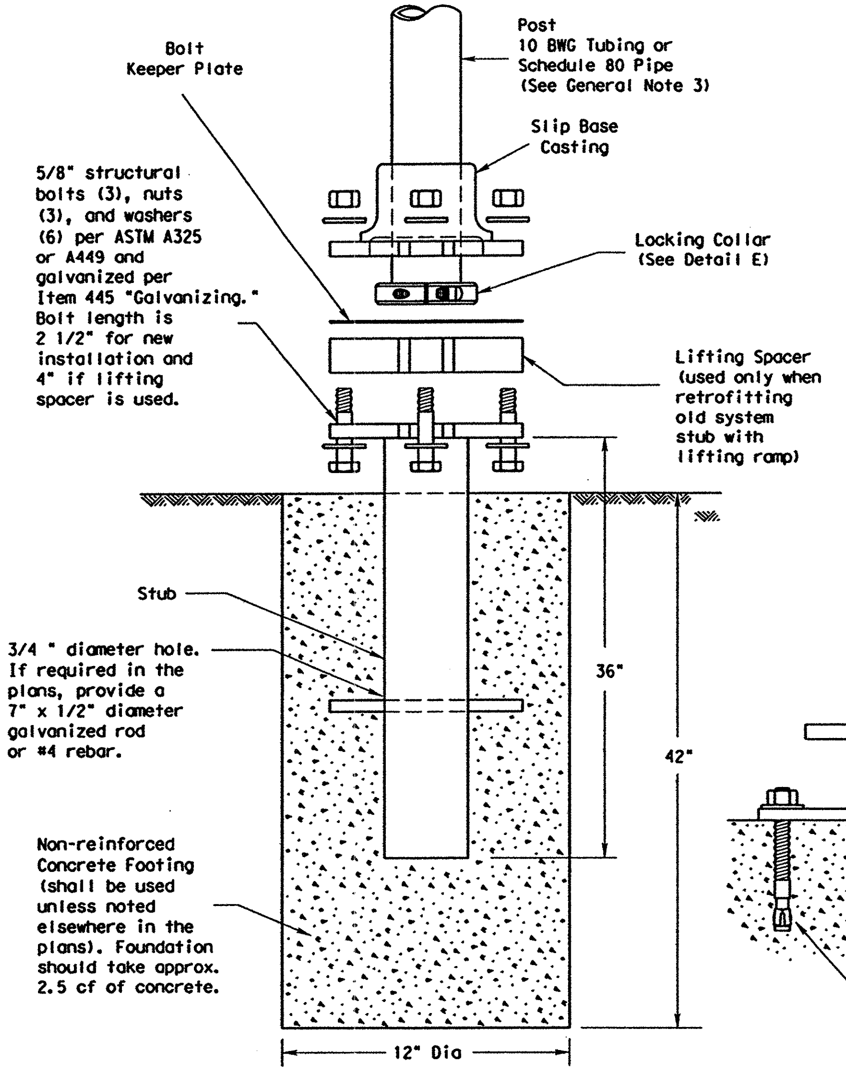

SM RD SGN ASSM TY XXXXX(X)SA(X-XXXX)

Concrete anchor consists of 5/8" diameter stud bolt with UNC series bolt threads on the upper end. Heavy hex nut per ASTM A563, and hardened washer per ASTM F436. The stud bolt shall have minimum yield and ultimate tensile strengths of 50 and 75 KSI, respectively. Nuts, bolts and washers shall be galvanized per Item 445, "Galvanizing." Top of bolt shall extend at least flush with top of the nut when installed. The anchor, when installed in 4000 psi normal-weight concrete with a 5 1/2" minimum embedment, shall have a minimum allowable tension and shear of 3900 and 3100 psi, respectively. Adhesive type anchors shall have stud bolts installed with Type III epoxy per DMS-6100, "Epoxies and Adhesives." Adhesive anchors may be loaded after adequate epoxy cure time, per the manufacturer's recommendations.

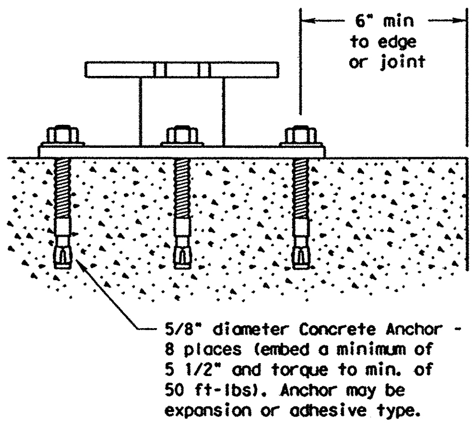

SM RD SGN ASSM TY XXXXX(X)SB(X-XXXX)

Detail E

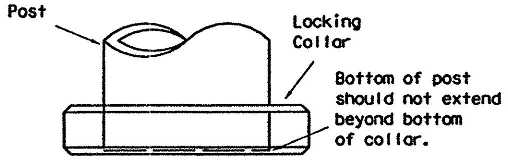

ROLL PIN (Optional)

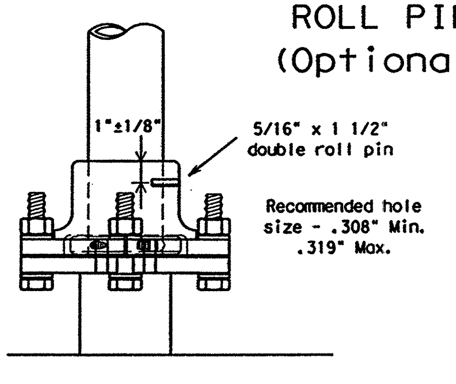

If shown in plans, the Engineer may require the roll pin to be installed to reduce possible sign rotation.

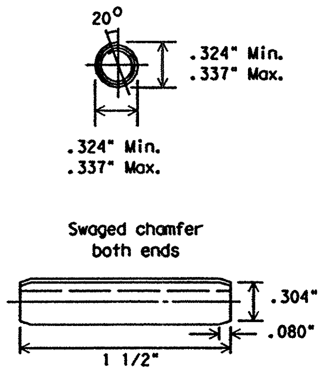

DOUBLE ROLL PIN DETAIL

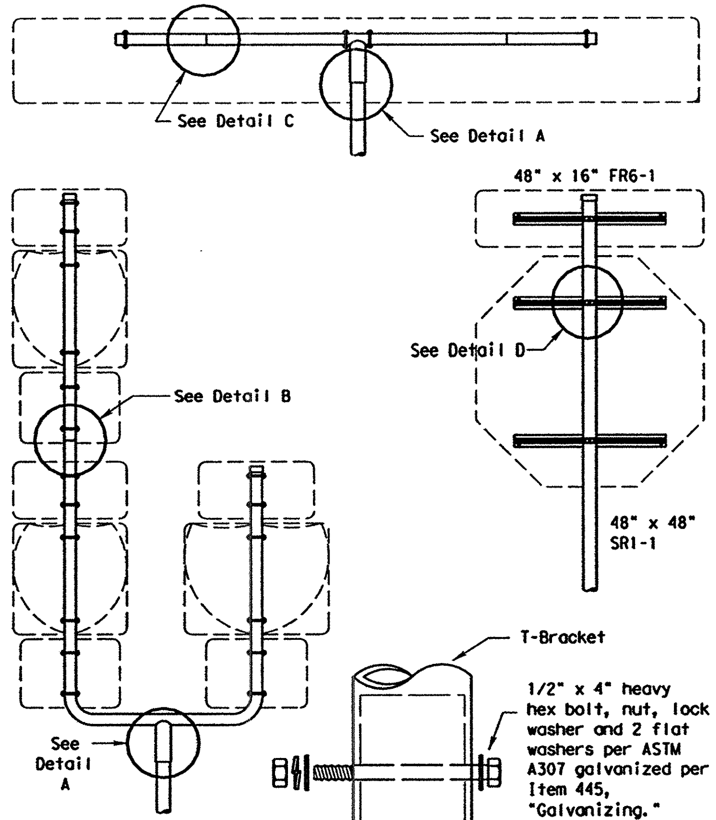

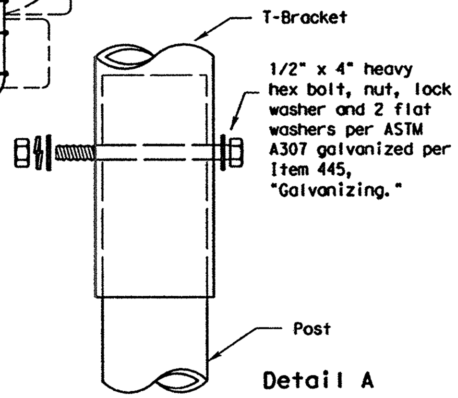

Detail A

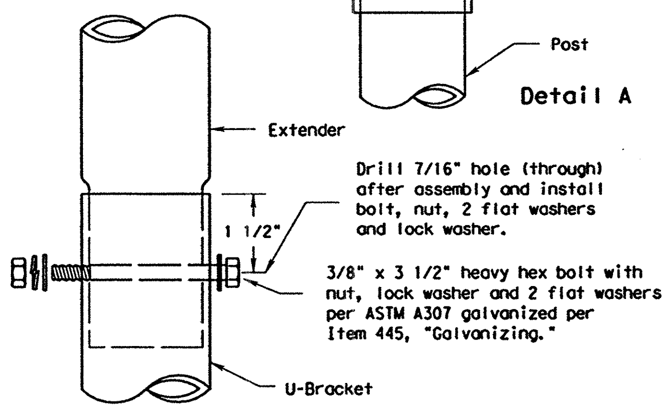

Detail B

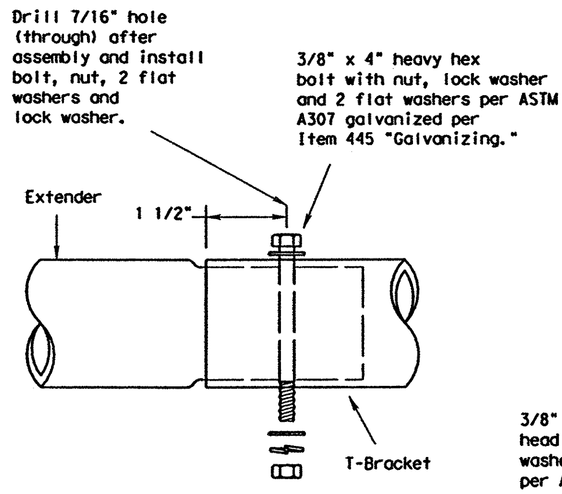

Detail C

Splices shall only be allowed behind the sign substrate.

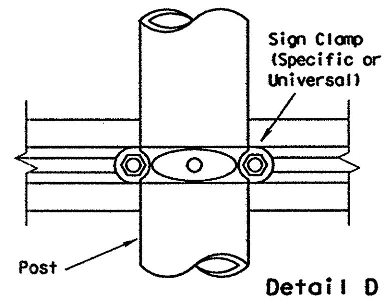

Detail D

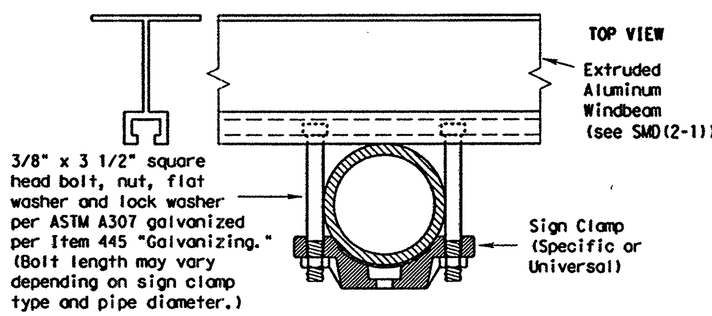

GENERAL NOTES:

1. Finished components, except posts (10 BWG Tubing and Schedule 80 Pipe) and clamps, shall be permanently marked to indicate manufacturer. Method, design, and location of marking are subject to approval of the TxDOT Traffic Standards Engineer.
2. Except for posts (10 BWG Tubing and Schedule 80 Pipe), clamps, nuts and bolts, all components shall be prequalified. A list of prequalified vendors may be obtained from the TxDOT Traffic Standards Engineer, or the Traffic Operations Division website. The website address is: http://www.dot.state.tx.us/insdtdot/orgchart/trf/trfeng/
3. Material used as post with this system shall conform to the following specifications:
   10 BWG Tubing (2.875" outside diameter)
   0.134" nominal wall thickness
   Seamless or electric-resistance welded steel tubing or pipe
   Steel shall be HSLAS Gr 55 per ASTM A1011 or ASTM A1008
   Other steels may be used if they meet the following:
   55,000 PSI minimum yield strength
   70,000 PSI minimum tensile strength
   20% minimum elongation in 2"
   Wall thickness (uncoated) shall be within the range of 0.122" to 0.138"
   Outside diameter (uncoated) shall be within the range of 2.867" to 2.883"
   Galvanization per ASTM A123 or ASTM A653 G210. For precoated steel tubing (ASTM A653), recoat tube outside diameter weld seam by metallizing with zinc wire per ASTM B833.
   Schedule 80 Pipe (2.875" outside diameter)
   0.276" nominal wall thickness
   Steel tubing per ASTM A500 Gr C
   Other seamless or electric-resistance welded steel tubing or pipe with equivalent outside diameter and wall thickness may be used if they meet the following:
   46,000 PSI minimum yield strength
   62,000 PSI minimum tensile strength
   21% minimum elongation in 2"
   Wall thickness (uncoated) shall be within the range of 0.248" to 0.304"
   Outside diameter (uncoated) shall be within the range of 2.855" to 2.895"
   Galvanization per ASTM A123
4. See the Traffic Operations Division website for detailed drawings of sign clamps and Texas Universal Triangular Slipbase System components. The website address is:
   ftp://ftp.dot.state.tx.us/pub/txdot-info/cmd/cserve/standard/traffic/slip.pdf
5. Sign supports shall not be spliced except where shown. Sign support posts shall not be spliced.

ASSEMBLY PROCEDURE

Foundation

1. Prepare 12-inch diameter by 42-inch deep hole. If solid rock is encountered, the depth of the foundation may be reduced such that it is embedded a minimum of 18 inches into the solid rock.
2. Thoroughly wet and mix concrete in a container. Place concrete into hole until it is approximately flush with the ground.
3. Push the pipe end of the slip base stub into the center of the concrete. Rotate the stub back and forth while pushing it down into the concrete to assure good contact between the concrete and stub. Continue to work the stub into the concrete until it is between 2 to 4 inches above the ground. The upper value assures that an impacting vehicle should not snag on the footing. The lower value provides clearance for assembly.
4. Plumb the stub by using a torpedo level on the slip plate. Allow concrete adequate time to set.

Support

1. Cut support so that the bottom of the sign will be 7 to 7.5 feet above the edge of the travelway (i.e., edge of the closest lane) when slip plate is below the edge of pavement or 7 to 7.5 feet above slip plate when the slip plate is above the edge of the travelway. The cut shall be plumb and straight.
2. Attach sign to support using connections shown. When multiple signs are installed on the same support, ensure the minimum clearance between each sign is maintained. See SMD(SLIP-2) for clearances based on sign types.
3. Slide the slipbase casting onto the lower end of the sign support.
4. Drive a chisel or a flat-blade screwdriver into the cut on the locking collar to slightly pry the collar open. Slide the collar onto the end of the pipe so the edge of the pipe is between the face of the locking collar and the end of the edge bevel. A dead-blow hammer may be useful in positioning the collar correctly. Remove the tool used to pry the collar open. Torque the allen bolt to 60 foot-pounds (720 inch-pounds). DO NOT OVERTIGHTEN.
5. Place and align bolt keeper plate on slip plate and lift assembled sign and support into position.
6. Place one washer on each bolt and insert them through keeper plate and the notches on the slip plate and casting. After inserting each bolt, place one washer and a nut on the bolt and hand-tighten all three.
7. The breakaway features of this system will work when all three bolts are tightened between 40 to 80 foot-pounds (480 to 960 inch-pounds). The Engineer shall determine the appropriate bolt torque for each project. Tighten all bolts by working around the support in approximately 10 foot-pound increments to assure a balanced tension in the bolts. All three bolts shall be torqued the same. DO NOT OVERTIGHTEN.

STANDARD PLANS
Texas Department of Transportation
Traffic Operations Division

SIGN MOUNTING DETAILS SMALL ROADSIDE SIGNS TRIANGULAR SLIPBASE SYSTEM

SMD(SLIP-1)-02

©TxDOT July 2002	DN: BAS	CK: GRB	DW: FDN	CK: CAL
REVISIONS	STATE DISTRICT: 22	FEDERAL REGION: 6	FEDERAL AID PROJECT: NH-2002 (79)	SHEET: 849
COUNTY: WEBB	CONTROL: 0018	SECTION: 05	JOB: 062, ETC	HIGHWAY: IH 35

b34mp162.dan-01 HOUFILE023 \hcivil\cf0130\4/18/2003

DISPLAYED						ACC:
1	2	3	4	5	6	
17	18	19	20	21	22	
33	34	35	36	37	38	
49	50	51	52	53	54	

DISCLAIMER
The use of this standard is governed by the "Texas Engineering Practice Act". No warranty of any kind is made by TxDOT for any purpose whatsoever. TxDOT assumes no responsibility for the conversion of this standard to other formats or for incorrect results or damages resulting from its use.

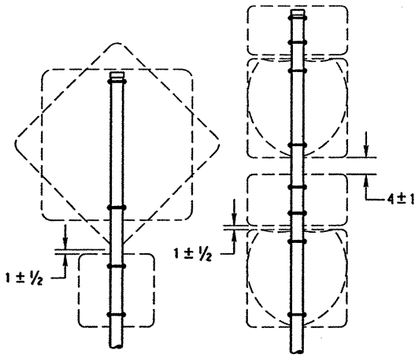

SM RD SGN ASSM TY XXXXX(1)XX(P)

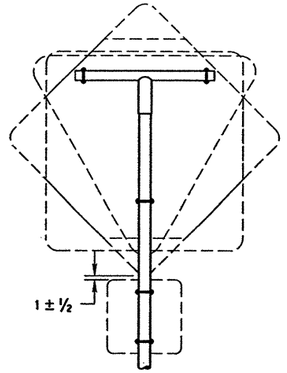

SM RD SGN ASSM TY XXXXX(1)XX(T)

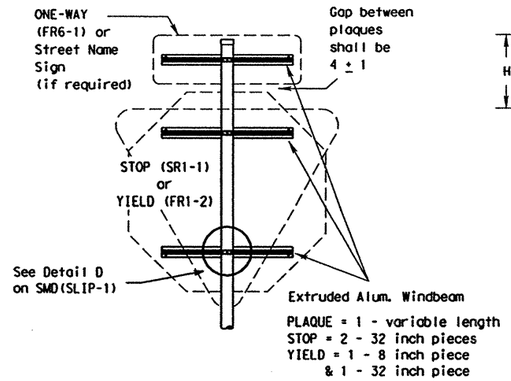

SM RD SGN ASSM TY XXXXX(1)XX(P-BM)

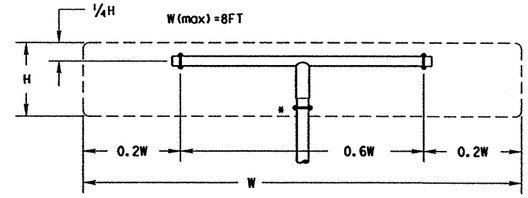

SM RD SGN ASSM TY XXXXX(1)XX(T)
(* - See Note 13)

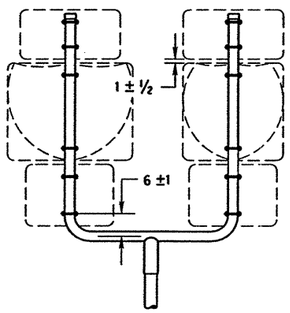

SM RD SGN ASSM TY XXXXX(1)XX(U)

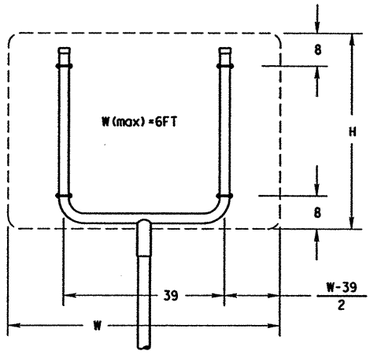

SM RD SGN ASSM TY XXXXX(1)XX(U)

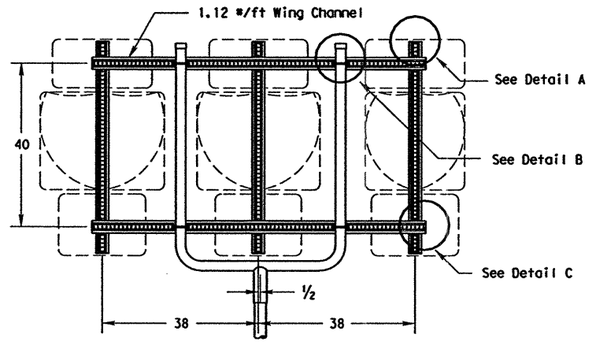

SM RD SGN ASSM TY XXXXX(1)XX(U-WC)
(See Note 12)

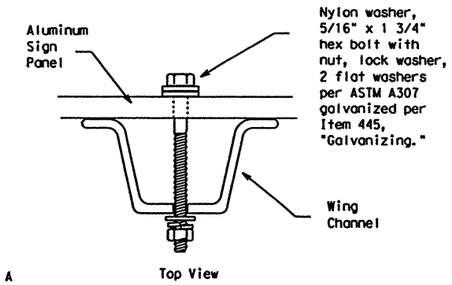

Top View
Detail A

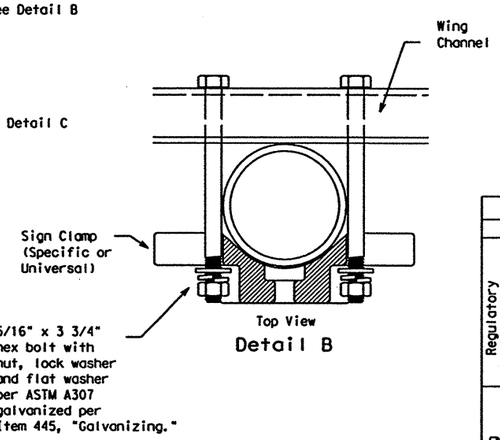

Top View
Detail B

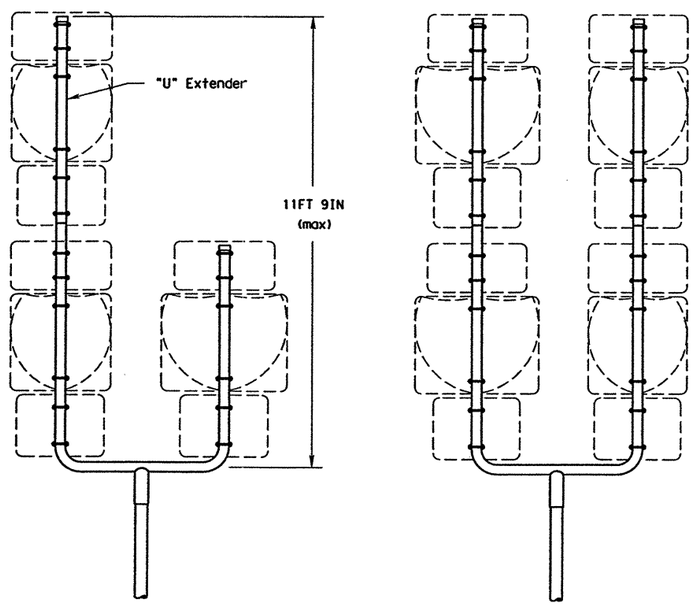

SM RD SGN ASSM TY S80(1)XX(U-1EXT)

SM RD SGN ASSM TY S80(1)XX(U-2EXT)

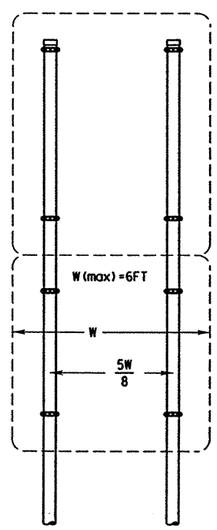

SM RD SGN ASSYM TY XXXXX(2)XX(P)

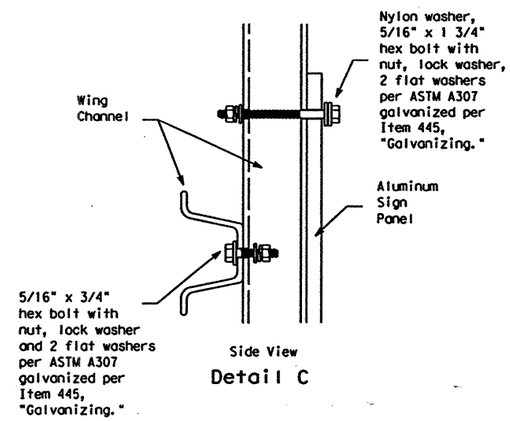

Side View
Detail C

GENERAL NOTES:

1.

SIGN SUPPORT	# OF POSTS	MAX. SIGN AREA
10 BWG	1	16 SF
10 BWG	2	32 SF
Sch 80	1	32 SF
Sch 80	2	64 SF

2. The Engineer may require that a Schedule 80 post be used in place of a 10 BWG where a sign height is abnormally high due to a fill slope.
3. Sign supports shall not be spliced except where shown. Sign support posts shall not be spliced.
4. Aluminum sign blanks shall conform to Departmental Material Specifications DMS-7110 and shall have the following minimum thicknesses: 0.080 for signs less than 7.5 sq. ft., 0.100 for signs 7.5 to 15 sq. ft., and 0.125 for signs greater than 15 sq. ft.
5. Plywood signs shall conform to Departmental Material Specification DMS-7100 and shall be 5/8 inches thick.
6. Signs that require specific supports due to reasons in addition to windloading are indicated on the "REQUIRED SUPPORT" table on this sheet.
7. For horizontal rectangular signs, T-brackets are used for signs 24 inches or less in height. U-brackets are used for signs of greater height.
8. When two triangular slipbase supports are used to support a single sign, they shall not be "rigidly" connected to each other except through the sign panel. This will allow each support to act independently when impacted by an errant vehicle.
9. Wing channel shall meet ASTM A 1011 SS Gr 50 and be galvanized per ASTM A 123.
10. Excess pipe, winged channel, or windbeam shall be cut off so that it does not extend beyond the sign panel (i.e., excess support shall not be visible when the sign is viewed from the front.) Repair galvanized coating at cut support ends per Item 445, "Galvanizing."
11. The Engineer may allow the use of an expanded foam foundation. A list of approved suppliers of expanding foam may be obtained from the Traffic Operations Division (TRF) or from the TRF website. The website address is: http://www.dot.state.tx.us/insdtdot/orgchart/trf/trfeng/
12. Additional route markers may be added vertically, provided the total sign area does not exceed the maximum allowable amount per Note 1.
13. Additional sign clamp required on the "T-bracket" post for 24 inch high signs. Place the clamp 3 inches above bottom of sign when possible.

REQUIRED SUPPORT

	SIGN DESCRIPTION	SUPPORT
Regulatory	48-inch STOP sign (SR1-1)	TY 10BWG(1)XX(T) TY 10BWG(1)XX(P-BM)
Regulatory	60-inch YIELD sign (FR1-2)	TY 10BWG(1)XX(T) TY 10BWG(1)XX(P-BM)
Regulatory	48x16-inch ONE-WAY sign (FR6-1)	TY 10BWG(1)XX(T) TY 10BWG(1)XX(P-BM)
Regulatory	36x48, 48x36, and 48x48-inch signs	TY 10BWG(1)XX(T)
Regulatory	48x60-inch signs	TY S80(1)XX(T)
Warning	48x48-inch signs (diamond or square)	TY 10BWG(1)XX(T)
Warning	48x60-inch signs	TY S80(1)XX(T)
Warning	48-inch Advance School X-ing sign (SS1-1)	TY 10BWG(1)XX(T)
Warning	48-inch School X-ing sign (SS2-1)	TY 10BWG(1)XX(T)
Warning	Large Arrow sign (W1-6 & W1-7)	TY 10BWG(1)XX(T)

STANDARD PLANS
Texas Department of Transportation
Traffic Operations Division

SIGN MOUNTING DETAILS SMALL ROADSIDE SIGNS TRIANGULAR SLIPBASE SYSTEM

SMD(SLIP-2)-02

©TxDOT July 2002	DN: BAS	CK: GRB	DW: FDN	CK: CAL
REVISIONS	STATE DISTRICT 22	FEDERAL REGION 6	FEDERAL AID PROJECT NH-2002 (79)	SHEET 850
	COUNTY WEBB	CONTROL 0018	SECTION 05	JOB 062, ETC
	HIGHWAY IH 35			

DISPLAYED | ACC:

b34mo163.dan-01 HOUFILE023 \hcivil\cf0130W18/2003

DISCLAIMER
The use of this standard is governed by the "Texas Engineering Practice Act". No warranty of any kind is made by TxDOT for any purpose whatsoever. TxDOT assumes no responsibility for the conversion of this standard to other formats or for incorrect results or damages resulting from its use.

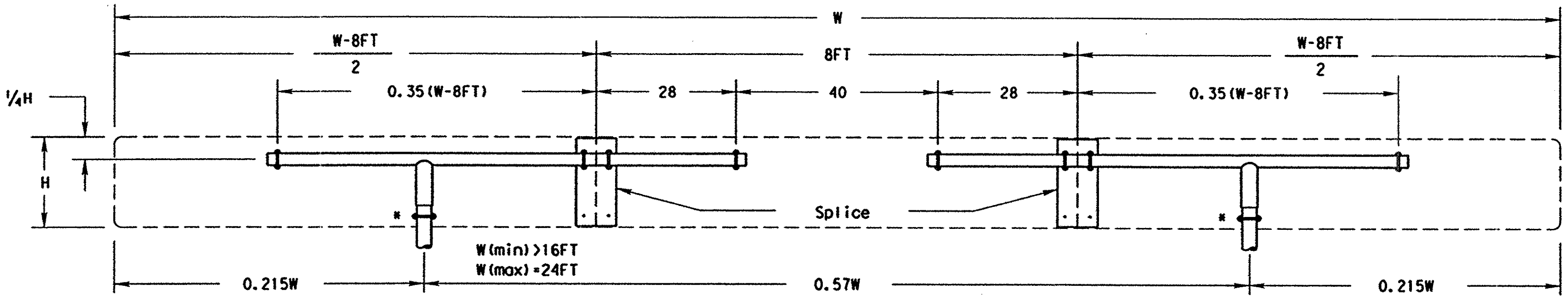

SM RD SGN ASSM TY XXXXX(2)XX(T-2EXT)

(* - See Note 13)

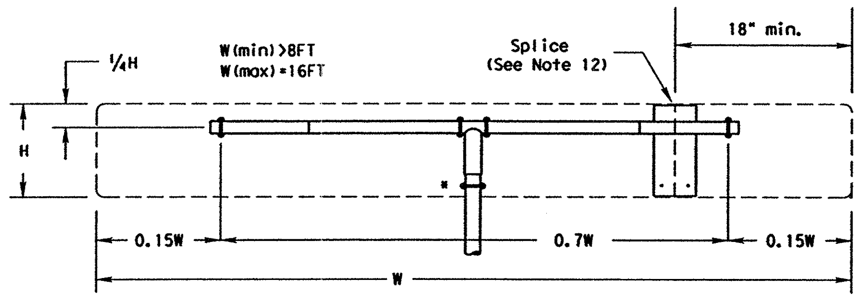

SM RD SGN ASSM TY XXXXX(1)XX(T-2EXT)

(* - See Note 13)

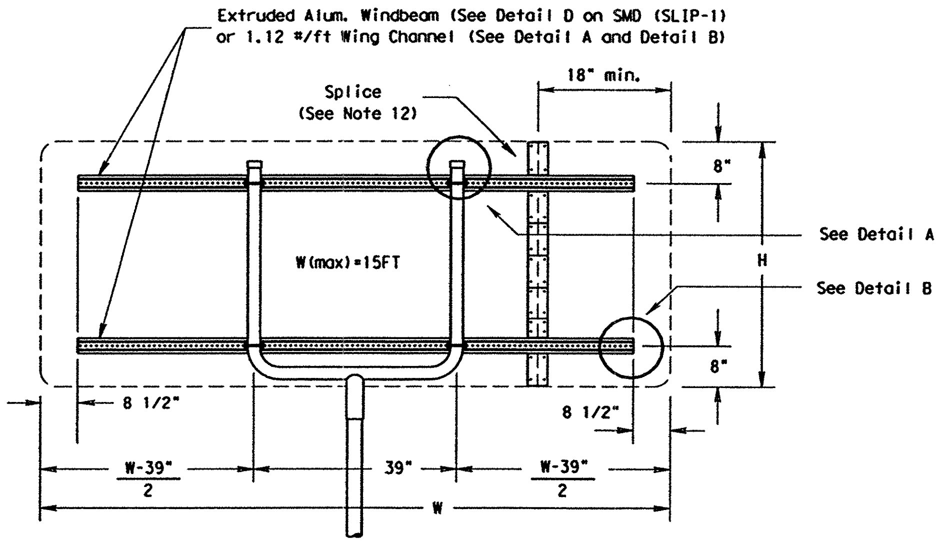

SM RD SGN ASSM TY XXXXX(1)XX(U-XX)

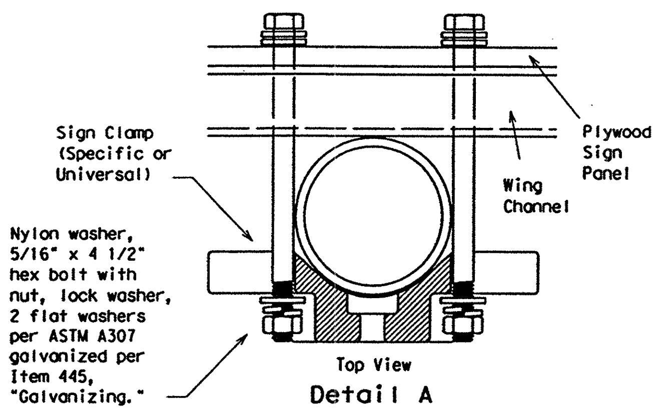

Top View
Detail A

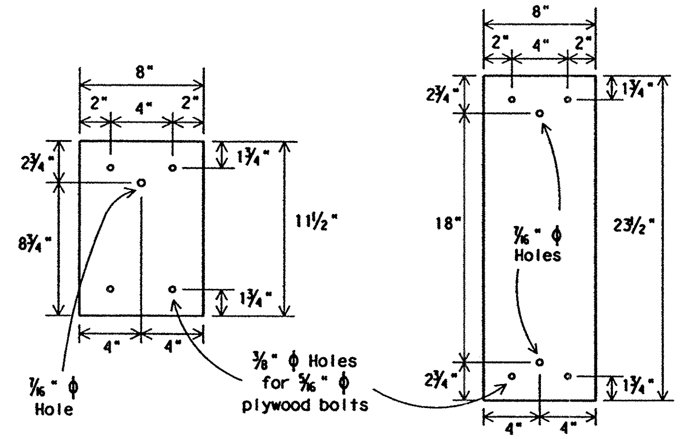

Splice Plates

Splice plates shall be 1/8 " steel plate (ASTM A36) or 1/8 " aluminum plate (ASTM B209 ALLOY 6061-T6 or 5052-H38). Steel shall be galvanized in accordance with ASTM A123.

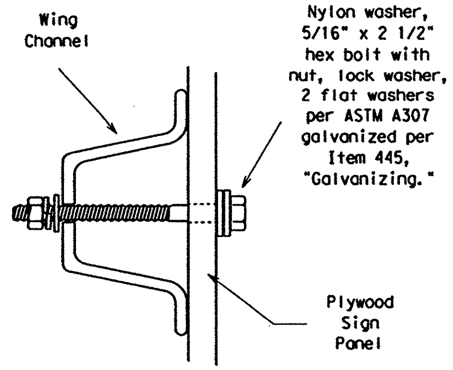

Side View
Detail B

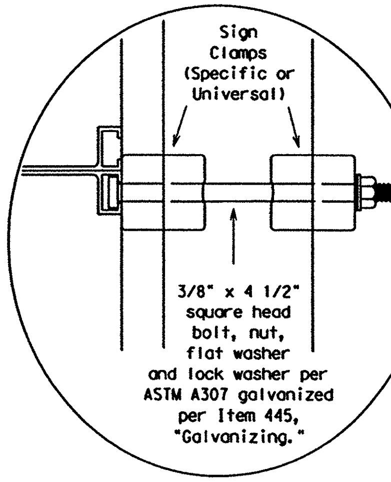

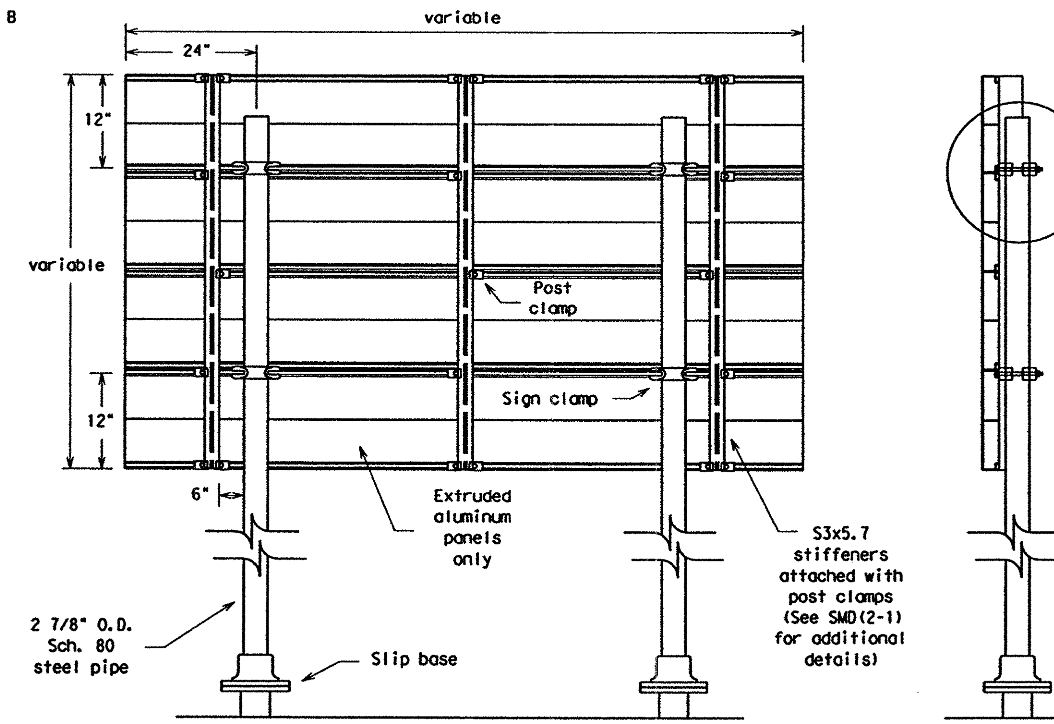

Typical Extruded Aluminum Sign Mount
SM RD SGN ASSM TY S80(2)XX(P-EXAL)

GENERAL NOTES:

1.

SIGN SUPPORT	# OF POSTS	MAX. SIGN AREA
10 BWG	1	16 SF
10 BWG	2	32 SF
Sch 80	1	32 SF
Sch 80	2	64 SF

2. The Engineer may require that a Schedule 80 post be used in place of a 10 BWG where a sign height is abnormally high due to a fill slope.
3. Sign supports shall not be spliced except where shown. Sign support posts shall not be spliced.
4. Aluminum sign blanks shall conform to Departmental Material Specifications DMS-7110 and shall have the following minimum thicknesses: 0.080 for signs less than 7.5 sq. ft., 0.100 for signs 7.5 to 15 sq. ft., and 0.125 for signs greater than 15 sq. ft.
5. Plywood signs shall conform to Departmental Material Specification DMS-7100 and shall be 5/8 inches thick.
6. Signs that require specific supports due to reasons in addition to windloading are indicated on the "REQUIRED SUPPORT" table on this sheet.
7. For horizontal rectangular signs, T-brackets are used for signs 24 inches or less in height. U-brackets are used for signs of greater height.
8. When two triangular slipbase supports are used to support a single sign, they shall not be "rigidly" connected to each other except through the sign panel. This will allow each support to act independently when impacted by an errant vehicle.
9. Wing channel shall meet ASTM A 1011 SS Gr 50 and be galvanized per ASTM A 123.
10. Excess pipe, winged channel, or windbeam shall be cut off so that it does not extend beyond the sign panel (i.e., excess support shall not be visible when the sign is viewed from the front.) Repair galvanized coating at cut support ends per Item 445, "Galvanizing."
11. The Engineer may allow the use of an expanded foam foundation. A list of approved suppliers of expanding foam may be obtained from the Traffic Operations Division (TRF) or from the TRF website. The website address is: http://www.dot.state.tx.us/insdtdot/orgchart/trf/trfeng/
12. Sign blanks shall be the sizes and shapes shown on the plans. Unless otherwise shown, no panel on multi-panel plywood signs shall have a dimension less than 18 inches. Plywood signs 4 feet by 8 feet or smaller in either dimension shall be of one piece construction.
13. Additional sign clamp required on the "T-bracket" post for 24 inch high signs. Place the clamp 3 inches above bottom of sign when possible.

REQUIRED SUPPORT		
	SIGN DESCRIPTION	SUPPORT
Regulatory	48-inch STOP sign (SR1-1)	TY 10BWG(1)XX(T) TY 10BWG(1)XX(P-BM)
Regulatory	60-inch YIELD sign (FR1-2)	TY 10BWG(1)XX(T) TY 10BWG(1)XX(P-BM)
Regulatory	48x16-inch ONE-WAY sign (FR6-1)	TY 10BWG(1)XX(T) TY 10BWG(1)XX(P-BM)
Regulatory	36x48, 48x36, and 48x48-inch signs	TY 10BWG(1)XX(T)
Regulatory	48x60-inch signs	TY S80(1)XX(T)
Warning	48x48-inch signs (diamond or square)	TY 10BWG(1)XX(T)
Warning	48x60-inch signs	TY S80(1)XX(T)
Warning	48-inch Advance School X-ing sign (SS1-1)	TY 10BWG(1)XX(T)
Warning	48-inch School X-ing sign (SS2-1)	TY 10BWG(1)XX(T)
Warning	Large Arrow sign (W1-6 & W1-7)	TY 10BWG(1)XX(T)

STANDARD PLANS
Texas Department of Transportation
Traffic Operations Division

SIGN MOUNTING DETAILS SMALL ROADSIDE SIGNS TRIANGULAR SLIPBASE SYSTEM

SMD(SLIP-3)-02

©TxDOT July 2002	DN: BAS	CK: GRB	DW: FDN	CK: CAL
REVISIONS	STATE DISTRICT 22	FEDERAL REGION 6	FEDERAL AID PROJECT NH-2002 (79)	SHEET 851
	COUNTY WEBB	CONTROL 0018	SECTION 05 / JOB 062, ETC	HIGHWAY IH 35

b34mp164.dan-01 HOUFILE023 \hcivil\cf0130\4/18/2003

DISPLAYED

1	2	3	4	5	6	7	8	9	10	11	12	13	14	15	16
17	18	19	20	21	22	23	24	25	26	27	28	29	30	31	32
33	34	35	36	37	38	39	40	41	42	43	44	45	46	47	48
49	50	51	52	53	54	55	56	57	58	59	60	61	62	63	

ACC:

DISCLAIMER
The use of this standard is governed by the "Texas Engineering Practice Act". No warranty of any kind is made by TxDOT for any purpose whatsoever. TxDOT assumes no responsibility for the conversion of this standard to other formats or for incorrect results or damages resulting from its use.

Wedge Anchor System

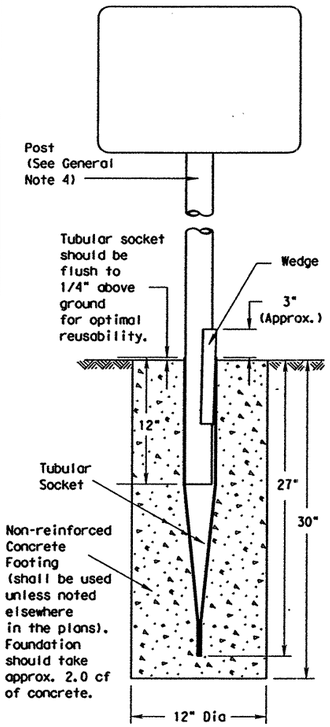

SM RD SGN ASSM TY TWT(X)WA(P)

Universal Anchor System with Thin-Walled Tubing Post

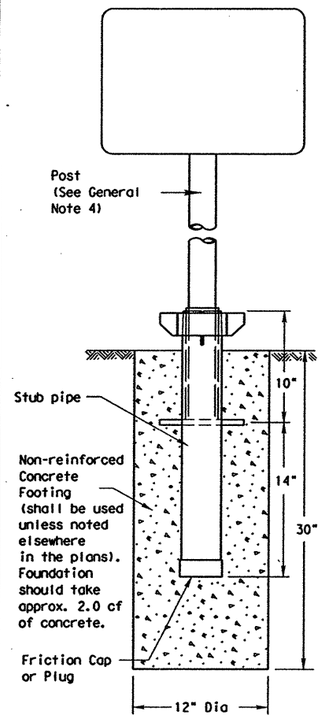

SM RD SGN ASSM TY TWT(X)UA(P)

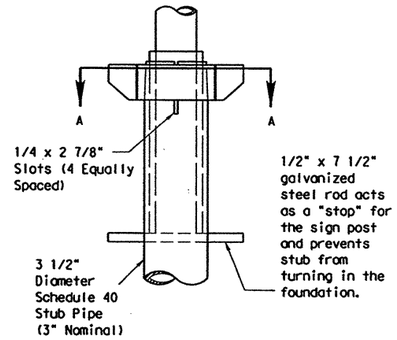

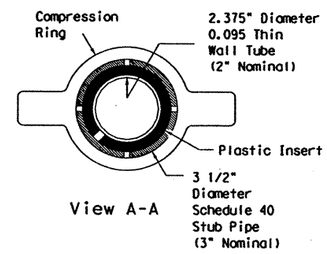

Plastic insert must be used when using the TWT with either the Universal Anchor System or the Bolt Down Universal Anchor System. The insert should be approx. 10" long and cover the tubing from just above the top of the stub pipe to the bottom of the sign post when using the Universal Anchor System. The insert should be cut to approx. 4 1/2" when used with the Bolt Down Universal Anchor System.

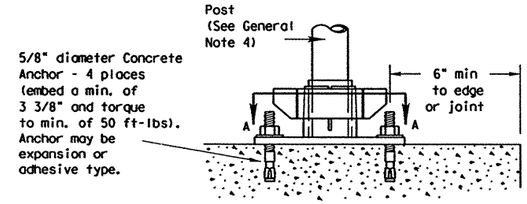

Concrete anchor consists of 5/8" diameter stud bolt with UNC series bolt threads on the upper end. A heavy hex nut per ASTM A563 and hardened washer per ASTM F436. The stud bolt shall have minimum yield and ultimate tensile strengths of 50 and 75 ksi, respectively. Nuts, bolts and washers shall be galvanized per Item 445, "Galvanizing." Top of bolt shall extend at least flush with top of nut when installed. The anchor, when installed in 4000 psi normal-weight concrete with a 3 3/8" minimum embedment, shall have a minimum allowable tension and shear of 2450 and 1525 psi, respectively. Adhesive type anchors shall have stud bolts installed with Type III epoxy per DMS-6100, "Epoxies and Adhesives." Adhesive anchors may be loaded after adequate epoxy cure time per the manufacturer's recommendations.

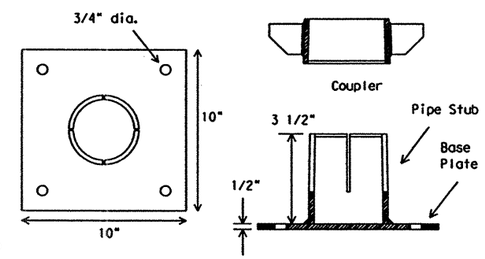

SM RD SGN ASSM TY TWT(X)UB(P)

Sign Installation Using a Prefabricated T-Bracket for Thin-Wall Tubing Post

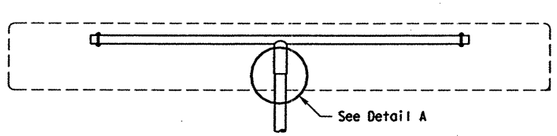

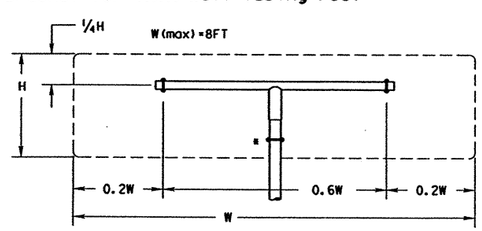

SM RD SGN ASSM TY TWT(X)XX(T)

(* - See General Note 6)

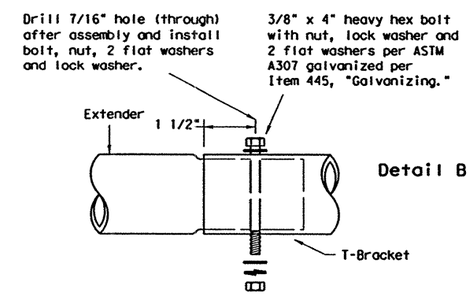

Detail B

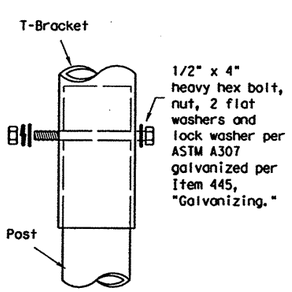

Detail A

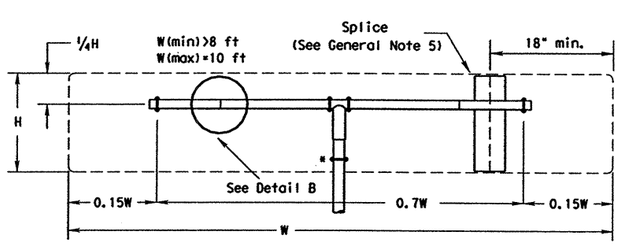

SM RD SGN ASSM TY TWT(X)XX(T-2EXT)

(* - See General Note 6)

For horizontal rectangular signs, T-brackets may be used for signs up to 24" in height. Square footage of signs may not exceed 10 sf on this system.

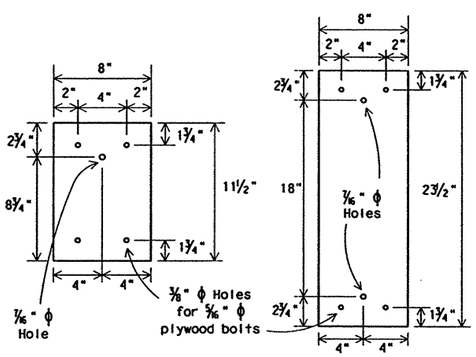

Splice Plates

Splice plates shall be 1/8" steel plate (ASTM A36) or 1/8" aluminum plate (ASTM B209 ALLOY 6061-T6 or 5052-H38.) Steel shall be galvanized in accordance with ASTM A123.

GENERAL NOTES:

1. The Wedge Anchor System and the Universal Anchor System with thin wall tubing post may be used to support up to 10 square feet of sign area.
2. The tubular socket, wedge and prefabricated T-bracket shall be permanently marked to indicate manufacturer. Method, design, and location of marking are subject to the approval of the TxDOT Traffic Standards Engineer.
3. Except for posts (13 BWG Tubing), clamps, nuts and bolts, all components shall be prequalified. A list of prequalified vendors may be obtained from the TxDOT Traffic Standards Engineer, or the Traffic Operations Division website. The website address is: http://www.dot.state.tx.us/insdtdot/orgchart/trf/trfeng
4. Material used as post with this system shall conform to the following specifications:
   13 BWG Tubing (2.375" outside diameter)
   0.095" nominal wall thickness
   Seamless or electric-resistance welded steel tubing
   Steel shall be HSLAS Gr 55 per ASTM A1011 or ASTM A1008
   Other steels may be used if they meet the following:
   55,000 PSI minimum yield strength
   70,000 PSI minimum tensile strength
   18% minimum elongation in 2"
   Wall thickness (uncoated) shall be within the range of .083" to .099"
   Outside diameter (uncoated) shall be within the range of 2.369" to 2.381"
   Galvanization per ASTM 123 or ASTM A653 G210. For precoated steel tubing (ASTM A653), recoat tube outside diameter weld seam by metallizing with zinc wire per ASTM B833.
5. Sign blanks shall be the sizes and shapes shown on the plans. Unless otherwise shown, no panel on multipanel plywood signs shall have a dimension less than 18 inches. Plywood signs 4 feet by 8 feet or smaller in either dimension shall be of one piece construction.
6. Additional sign clamp required on the "T-bracket" post for 24" high signs. Place clamp at least 3" above bottom of sign when possible.
7. Sign supports shall not be spliced except where shown. Sign support posts shall not be spliced.
8. See the Traffic Operations Division website for detailed drawings of sign clamps and Wedge Anchor System components. The website address is: ftp://ftp.dot.state.tx.us/pub/txdot-info/cmd/cserve/standard/traffic/slip.pdf

WEDGE ANCHOR SYSTEM INSTALLATION PROCEDURE

1. Dig foundation hole. Where solid rock is encountered at ground level, the foundation shall be a minimum depth of 18". When solid rock is encountered below ground level, the foundation shall extend in the solid rock a minimum depth of 18" or provide a minimum foundation depth of 30". If solid rock is encountered, the socket/stub may be reduced in length as required to a minimum length of 18". Any material removed from the socket/stub shall be from the bottom and the clearance requirements given on SMD(GEN) must be followed. The inner surfaces of the socket/stub must remain free of concrete or other debris.
2. Thoroughly wet and mix concrete in a container. Place concrete into hole until it is approximately flush with the ground.
3. Insert tubular socket into concrete until top of socket is approximately 1/4 " above the concrete footing.
4. Plumb the socket and allow concrete adequate time to set.
5. Attach the sign to the sign post.
6. Insert the sign post into socket and align sign face with roadway.
7. Drive the wedge into the socket to secure post. This will leave approximately 3 inches of the wedge exposed.

UNIVERSAL ANCHOR SYSTEM INSTALLATION PROCEDURE

1. Dig foundation hole. Where solid rock is encountered at ground level, the foundation shall be a minimum depth of 18". When solid rock is encountered below ground level, the foundation shall extend in the solid rock a minimum depth of 18" or provide a minimum foundation depth of 30". If solid rock is encountered, the socket/stub may be reduced in length as required to a minimum length of 18". Any material removed from the socket/stub shall be from the bottom and the clearance requirements given on SMD(GEN) must be followed. The inner surfaces of the socket/stub must remain free of concrete or other debris.
2. Insert base post in hole to depths shown and backfill hole with concrete.
3. Level and plumb the base post using a torpedo level and allow concrete adequate time to set. The bottom of the slots provided in the stub pipe shall remain above the top of the concrete foundation.
4. Attach the sign to the sign post.
5. Install plastic insert around bottom of post.
6. Insert sign post into base post. Lower until the post comes to rest on steel rod.
7. Seat compression ring using a hammer. Typically, the top of compression ring will be approximately level with top of stub post when optimally installed.
8. Check sign post by hand to ensure it is unable to turn. If loose, increase the tightening of the compression ring.

STANDARD PLANS
TEXAS DEPARTMENT OF TRANSPORTATION
Traffic Operations Division

SIGN MOUNTING DETAILS SMALL ROADSIDE SIGNS WEDGE & UNIVERSAL ANCHOR WITH THIN WALL TUBING POST

SMD(TWT)-02

©TxDOT July 2002	DN-BAS	CK-GRB	DW-FDN	CK-CAL
REVISIONS	STATE DISTRICT	FEDERAL REGION	FEDERAL AID PROJECT	SHEET
	22	6	NH-2002 (79)	852

COUNTY	CONTROL	SECTION	JOB	HIGHWAY
WEBB	0018	05	062, ETC	IH 35

b34mb165.dgn-01 HOUFILE023 \hcivil\cf0130\4/18/2003

DISPLAYED 1 2 3 4 5 6 7 8 9 10 11 12 13 14 15 16 17 18 19 20 21 22 23 24 25 26 27 28 29 30 31 32 33 34 35 36 37 38 39 40 41 42 43 44 45 46 47 48 49 50 51 52 53 54 55 56 57 58 59 60 61 62 63
ACC:

Universal Anchor System with Fiberglass Reinforced Plastic (FRP) Post

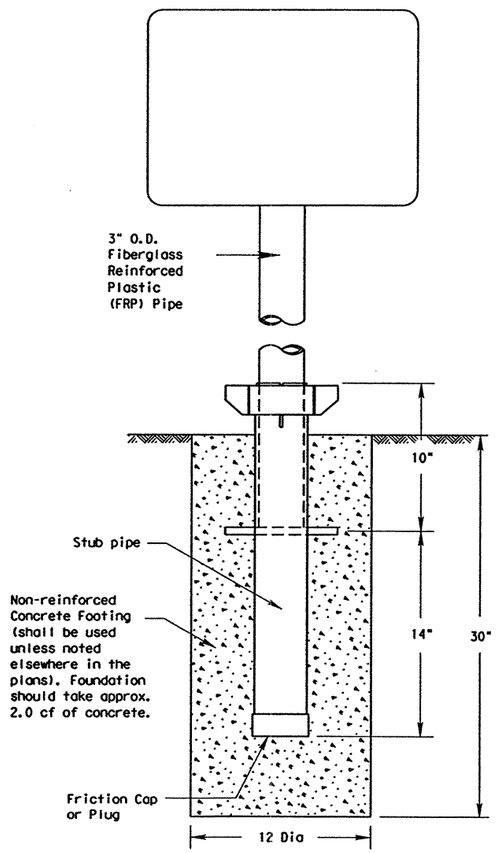

SM RD SGN ASSM TY FRP(X)UA(P)

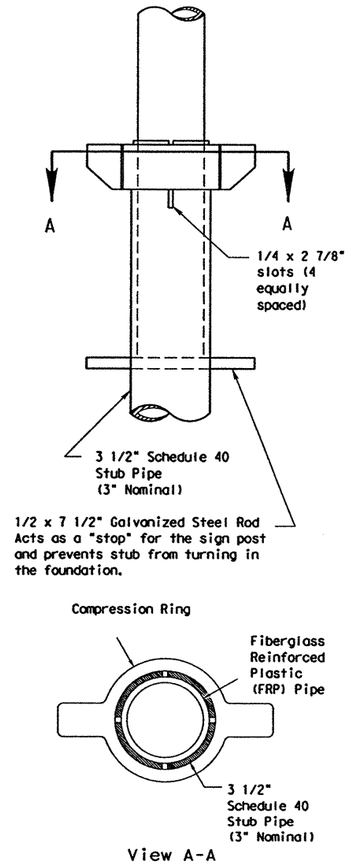

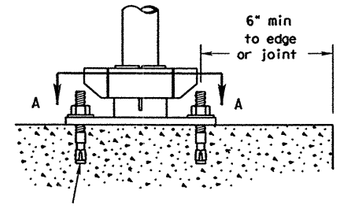

Concrete anchor consists of 5/8" diameter stud bolt with UNC series bolt threads on the upper end. A heavy hex nut per ASTM A563 and hardened washer per ASTM F436. The stud bolt shall have minimum yield and ultimate tensile strengths of 50 and 75 ksi, respectively. Nuts, bolts and washers shall be galvanized per Item 445, "Galvanizing." Top of bolt shall extend at least flush with top of nut when installed. The anchor, when installed in 4000 psi normal-weight concrete with a 3 3/8" minimum embedment, shall have a minimum allowable tension and shear of 2450 and 1525 psi, respectively. Adhesive type anchors shall have stud bolts installed with Type III epoxy per DMS-6100, "Epoxies and Adhesives." Adhesive anchors may be loaded after adequate epoxy cure time per the manufacturer's recommendations.

BOLT-DOWN DETAILS

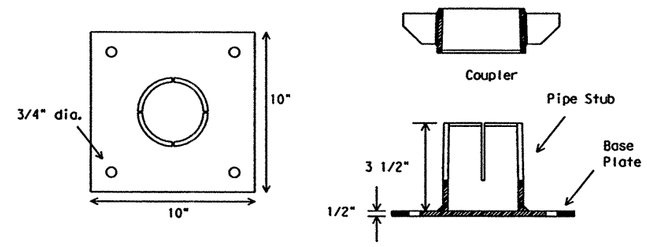

SM RD SGN ASSM TY FRP(X)UB(P)

GENERAL NOTES:

1. FRP sign supports for a single type sign support may be used for signs up to and including 16 square feet. Dual post installation may be used for signs up to and including 32 square feet.
2. All nuts, bolts and washers shall be galvanized per Item 445, "Galvanizing."
3. See the Traffic Operations Division website for detailed drawings of sign clamps. The website address is: http://www.dot.state.tx.us/insdtdot/orgchart/trf/trfeng/

FRP POST REQUIREMENTS

1. Materials shall conform to the requirements of Department Material Specification DMS-4410 and will be furnished in a yellow or gray color as specified elsewhere in the plans.
2. Thickness of FRP sign support is 0.125" + 0.031", - 0.0".
3. FRP sign supports are prequalified by the Traffic Operations Division. Prequalification procedures are obtained by writing:
   Texas Department of Transportation
   Traffic Operations Division
   125 East 11th Street
   Austin, Texas 78701-2483

UNIVERSAL ANCHOR SYSTEM INSTALLATION PROCEDURES

1. Dig foundation hole. Where solid rock is encountered at ground level, the foundation shall be a minimum depth of 18". When solid rock is encountered below ground level, the foundation shall extend in the solid rock a minimum depth of 18" or provide a minimum foundation depth of 30". If solid rock is encountered, the socket/stub may be reduced in length as required to a minimum length of 18". Any material removed from the socket/stub shall be from the bottom and the clearance requirements given on SMD(GEN) must be followed. The inner surfaces of the socket/stub must remain free of concrete or other debris.
2. Insert base post in foundation hole to depths shown and fill hole with concrete. Cut base post from bottom and ensure a minimum of 18" embedment if installed in solid rock.
3. Level and plumb the base post with coupler using a torpedo level and let concrete harden. Bottom of base post slots shall be above the concrete footing.
4. Attach sign to FRP post.
5. Insert sign post into base post. Lower until the post comes to rest on the steel rod.
6. Use hammer to ensure the coupler is firmly seated. Top of coupler should be level with top of base post in most instances.
7. Check sign to ensure there is no twist. If loose, increase the tightening of coupler.

BOLT DOWN SIGN SUPPORT

1. Position base plate with coupler on existing concrete.
2. Drill holes into concrete and insert the 5/8" diameter bolts with wedge anchors, and tighten nuts.
3. Attach sign to FRP post.
4. Insert bottom of sign post into pipe stub.
5. Use hammer to ensure the coupler is firmly seated. Top of coupler should be level with top of base post in most instances.
6. Check sign to ensure there is no twist. If loose, increase the tightening of coupler.

Typical Sign Mounting Detail for FRP Support with Single Sign

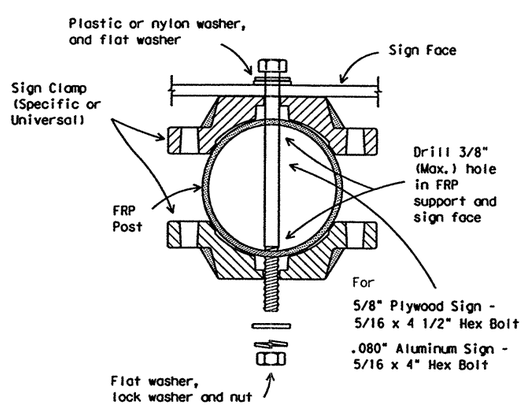

Typical Sign Mounting Detail for FRP Support with Back-to-Back Signs

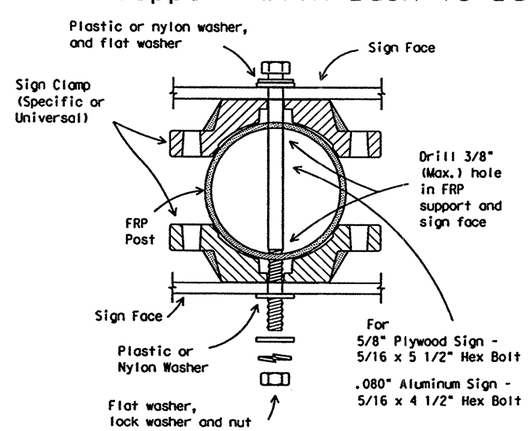

STANDARD PLANS
TEXAS DEPARTMENT OF TRANSPORTATION
Traffic Operations Division

SIGN MOUNTING DETAILS SMALL ROADSIDE SIGNS UNIVERSAL ANCHOR SYSTEM WITH FRP POST

SMD(FRP)-02

©TxDOT July 2002			DN: BAS	CK: GRB	DW: FDN	CK: CAL
REVISIONS	STATE DISTRICT	FEDERAL REGION	FEDERAL AID PROJECT			SHEET
	22	6	NH-2002 (79)			853
	COUNTY			CONTROL	SECTION	JOB	HIGHWAY
	WEBB			0018	05	062, ETC	IH 35

DISCLAIMER
The use of this standard is governed by the "Texas Engineering Practice Act". No warranty of any kind is made by TxDOT for any purpose whatsoever. TxDOT assumes no responsibility for the conversion of this standard to other formats or for incorrect results or damages resulting from its use.

DISPLAYED
ACC:

b34mp166.dgn-01 HOUFILE023 \hcivil\cf0130\4/18/2003

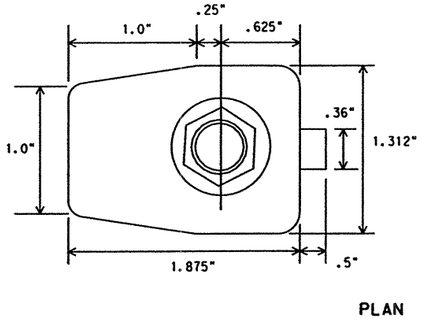

ALTERNATE POST CLAMP DETAIL

NOTE: centerline of hole for 3/8" diameter squarehead bolt x 2 1/4" long with a flat washer and self-locking nut, or lock washer and hex. nut. Bolt head dimensions shall be in accordance with ANSI B 18.2.1 as referred to in the AISC Manual of steel construction. Bolt assembly shall be galvanized.

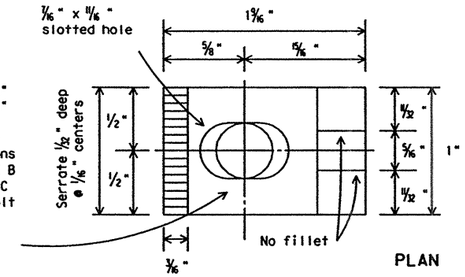

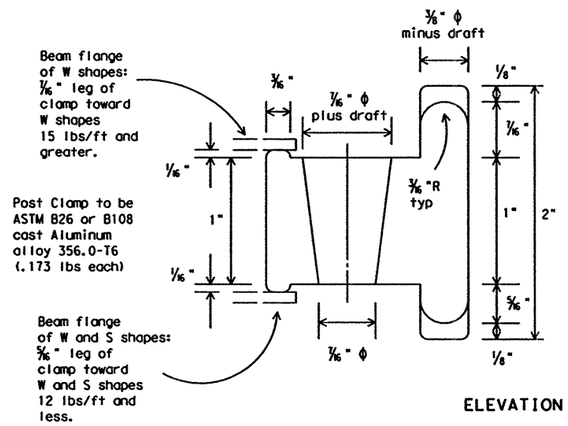

POST CLAMP DETAIL

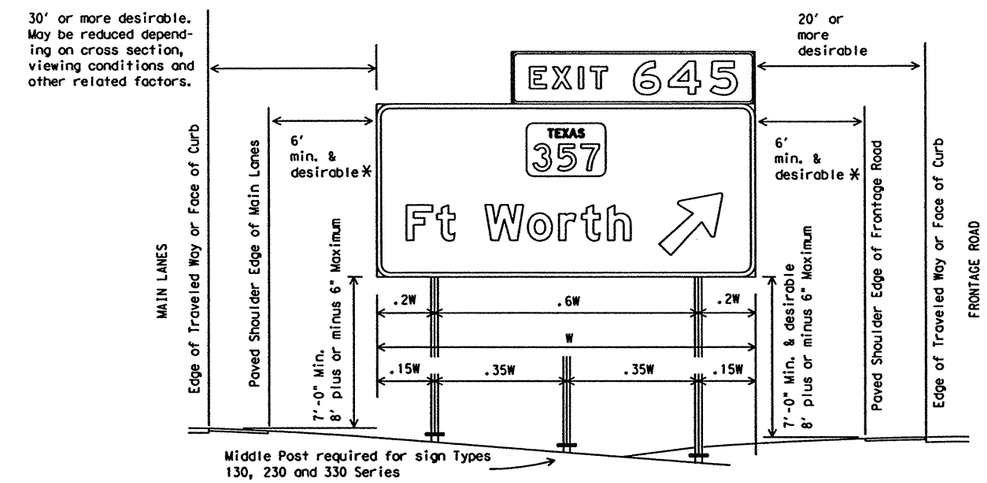

TYPICAL SIGN INSTALLATION AND LOCATION

LATERAL CLEARANCE NOTES:

Lateral clearances of signs mounted on median side of main lanes are the same as shown above where space will permit.

Where a sign is to be located behind guardrail, an allowable minimum clearance of two feet may be used, measured from the face of the guardrail to the near edge of sign.

✱ - 6' minimum and desirable may be used only in areas of limited lateral clearance and when approved by the Engineer.

POST SPACING NOTES:

Post spacing on a two post sign may vary a maximum of plus or minus 10% of total sign width to fit field conditions.

Post spacing on a three post sign may vary a maximum of plus 5% of total sign width to fit field conditions.

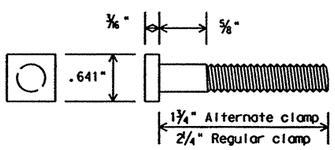

POST CLAMP BOLT DETAIL

WIND BEAM TABLES

For sign widths not in whole foot increments, select next larger sign width from tables for maximum wind beam spacing.

Example: Sign Code = 120, Sign Width = 14'6" ⟶ select 15' Sign Width
Max. Wind Beam Spacing = 3'0"

CODE

SIGN TYPE 1 3 0
- Wind Design Zone
- Series No. (Zero Denotes Plywood) (1 Denotes Aluminum)
- No. of Posts

ZONE 1 (Types 100)

	Two Posts (120)							Three Posts (130)									
Sign Width (W)	4' thru 12'	13'	14'	15'	16'	17'	18'	19'	20'	21'	22'	23'	24'	25'	26'	27'	28'
Max. Wind Beam Spacing	4'-0"	3'-8"	3'-4"	3'-0"	2'-8"	2'-4"	2'-0"	4'-0"		3'-9"	3'-6"	3'-3"	3'-0"	2'-9"	2'-6"	2'-3"	2'-0"

ZONE 2 (Types 200)

	Two Posts (220)			Three Posts (230)			
Sign Width (W)	4' thru 16'	17'	18'	19' thru 24'	25'	26'	27'	28'
Max. Wind Beam Spacing	4'-0"	3'-9"	3'-6"	4'-0"	3'-9"	3'-6"	3'-3"	3'-0"

ZONE 3 (Types 300)

	Two Posts (320)	Three Posts (330)
Sign Width (W)	4' thru 18'	19' thru 28'
Max. Wind Beam Spacing	4'-0"	4'-0"

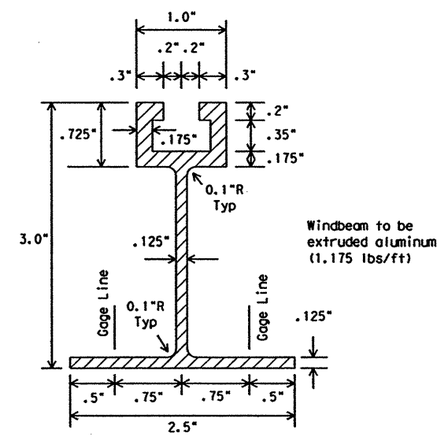

WINDBEAM CROSS SECTION

SIGN SUPPORTS SHALL NOT BE SPLICED EXCEPT AS SHOWN ELSEWHERE ON SMD STANDARDS

SPECIFICATION REFERENCE TABLE
MATERIALS AND TESTS DIVISION SPECIFICATIONS
SIGN HARDWARE D-9-7120

GENERAL NOTES:

1. Design conforms with AASHTO Specifications for the design and construction of structural supports for highway signs.
2. Materials and fabrication shall conform to the requirements of the Department material specifications.
3. Structural steel shall be high strength steel (HS) in accordance with the Item 442, "Metal For Structures."
4. Parts shall be saw cut either before galvanizing and the galvanized cut cleaned of zinc build-up, or saw cut after galvanizing and the cut surface treated with zinc-based solder or zinc-rich paint in accordance with ASTM A780. (Cut surface will not be treated until plate is installed and all bolts fully tightened.)
5. Exit number panel shall be mounted to the right hand side of the parent sign for right exits and to the left for left hand exits. The number panel shall be mounted with two uprights so its right edge is even with the right edge of the parent sign or vice-versa for left hand exits.

STANDARD PLANS
TEXAS DEPARTMENT OF TRANSPORTATION
Traffic Operations Division

SIGN MOUNTING DETAILS-LARGE ROADSIDE SIGNS STRUCTURE

SMD (2-1)-98

©TxDOT August 1995

DN: LR	CK: MT	DW: DN	CK:	MSG NO.:

REVISIONS	STATE DISTRICT	FEDERAL REGION	FEDERAL AID PROJECT	SHEET
6-96	22	6	NH-2002 (79)	854
1-97	COUNTY		CONTROL / SECTION / JOB	HIGHWAY
4-98	WEBB		0018 / 05 / 062, ETC	IH 35

DISCLAIMER
The use of this standard is governed by the "Texas Engineering Practice Act". No warranty of any kind is made by TxDOT for any purpose whatsoever. TxDOT assumes no responsibility for the conversion of this standard to other formats or for incorrect results or damages resulting from its use.

LEVELS DISPLAYED
1 2 3 4 5 6 7 8 9 10 11 12 13 14 15 16
17 18 19 20 21 22 23 24 25 26 27 28 29 30 31 32
33 34 35 36 37 38 39 40 41 42 43 44 45 46 47 48
49 50 51 52 53 54 55 56 57 58 59 60 61 62 63

ACC:

b34mp107.dgn-01 HOUFILE023 \hcivil\cf0130\ 4/18/2003

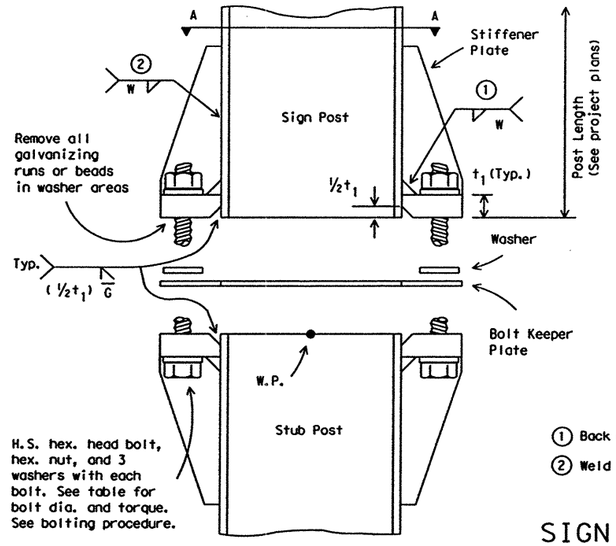

ELEVATION

① Back up weld to be made before installing stiffener plate

② Weld W may be continued across clips to seal joint

SIGN POST AND STUB POST

(For W Shapes)

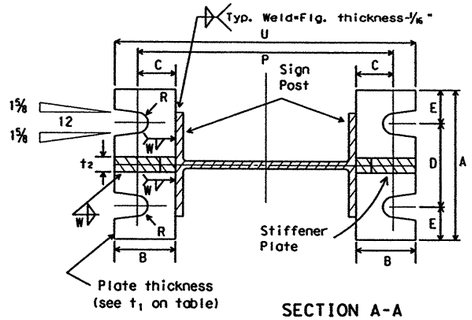

SECTION A-A

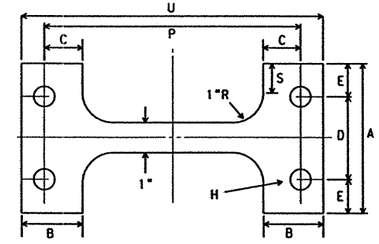

H= Bolt dia. + ⅛"

BOLT KEEPER PLATE

30 Ga galv. sheet steel

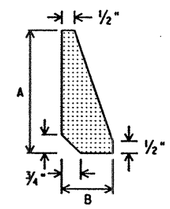

STIFFENER PLATE DETAIL

Steel Plate (thickness = t_2)

(See table for dimensions)

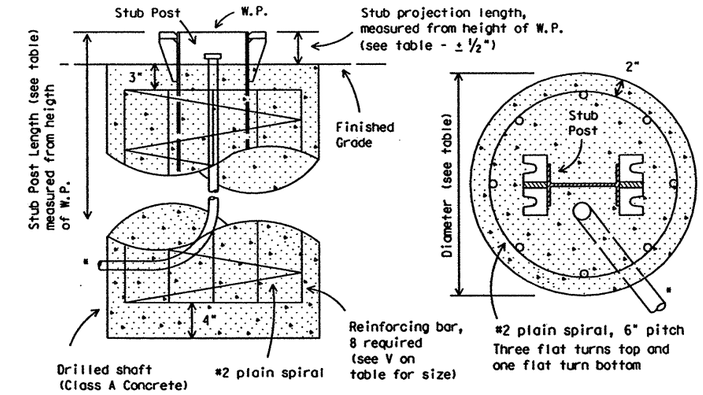

ELEVATION

PLAN

FOUNDATION DETAIL

*Note: For signs with electrical apparatus, see ED(10) for conduit required in founation.

BOLTING PROCEDURE FOR ASSEMBLY OF BASE CONNECTION:

1. Assemble sign post, BOLT KEEPER PLATE and stub post with bolts and three flat washers per bolt as shown.
2. Shim as required to plumb post.
3. Tighten all bolts the maximum possible with a 12 to 15 inch wrench to clean bolt threads and to bed washers and shims.
4. Loosen each bolt in sequence and retighten bolts in a systematic order to the prescribed torque. Do not overtighten.
5. To prevent nut loosening, burr threads of bolt at junction with nut using a center punch.

Dimensions / Post Size	Base Connection Data Table: Bolt Size & Torque	A	B	C	D	E	t_1	t_2	W	R	Perforated Fuse Plate Data Table: F	G	J	K	M	d_1	d_2	t_3	Bolt Dia.	Wt. (ea.) (lbs.)	Bolt length	Bolt Keeper Data: P	S	U	Foundation Data: Stub length	Stub projection	Dr. Shaft diameter	Bar V Size
W6x9	⅝"ϕ x 2¾" 440-450 inch pounds 36-38 foot pounds	5"	2"	1¼"	2¾"	1⅛"	¾"	½"	¼"	11/32"	4¼"	2"	4"	2¼"	1"	9/16"	¾"	¼"	½"	1.01	1½"	8⅜"	1"	9⅞"	2'-0"	3"	24"	#5
W6x12																						8½"		10"	2'-0"	3"		#5
W6x15											5"	2½"	6"	3½"	1½"	11/16"	1¼"	⅜"	⅝"	2.51	2¼"	8½"		10"	2'-6"	3"		#6
W8x18											5"	2½"	5¼"	2¾"	1¼"	11/16"	1 1/16"	⅜"	⅝"	2.26	2¼"	10⅝"		12⅛"	2'-6"	3"		#7
W8x21	¾"ϕ x 3½" 740-750 inch pounds 62-63 foot pounds	6"	2¼"	1⅜"	3½"	1¼"	1"	¾"	5/16"	13/32"	5½"	2½"	5¼"	2¾"	1¼"	13/16"	1"	½"	¾"	3.35	2¼"	11"	1½"	12¾"	3'-0"	2½"		#8
W10x22											6"	3"	5¾"	2¾"	1⅜"	13/16"	1⅛"	½"	¾"	4.03	2¼"	12⅞"		14⅝"	3'-0"	2½"		#9
W10x26																						13⅛"		14⅞"	3'-0"	2½"		#10
W12x26											6"	3"	6½"	3½"	1⅝"	13/16"	1 5/16"	½"	¾"	4.47	2¼"	15"		16¾"	3'-0"	2½"		#11
S3x5.7	½"ϕ x 2½" 440-450 inch pounds 36-38 foot pounds	See Detail Below									3¾"	1½"	2⅝"	1½"	⅝"	9/16"	⅜"	¼"	½"	0.60	1½"	See Detail Below			3'-3½"	3½"	12"	Non-reinforced ③
S4x7.7																												

③ Foundation design shall be Type G Mount, see SMD (TY G).

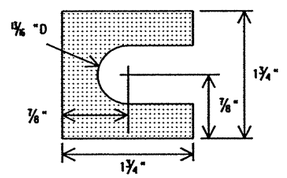

SHIM DETAIL

Furnish two .012"+ thick and two .032"+ thick shims per post. Shims shall be fabricated from brass shim stock or strip conforming to ASTM B36.

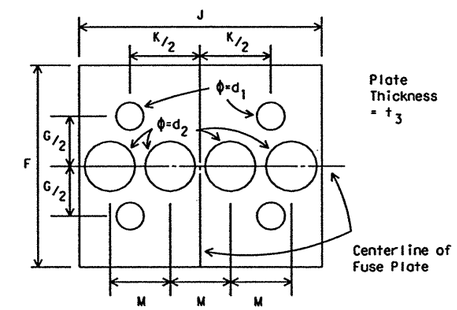

PERFORATED FUSE PLATE DETAIL

Use H.S. hex head bolts, hex head nut and bevel or flat washer (where req'd) under nut. All holes shall be drilled. All plate cuts shall preferably be saw cuts. However; flame cutting will be permitted provided all edges are ground. Metal projecting beyond the plane of the plate face will not be permitted. Steel fuse plates shall conform to the requirements of ASTM A36. ASTM A572 Grade 50 or ASTM A588 may be substituted for A36 at the option of the fabricator. Mill test reports shall be submitted for Fuse Plates. Steel used shall have an ultimate tensile strength not to exceed 80 KSI.

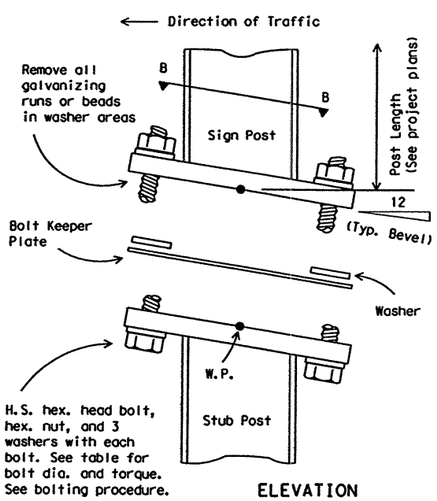

ELEVATION

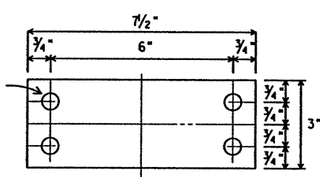

BOLT KEEPER PLATE

30 Ga galv. sheet steel

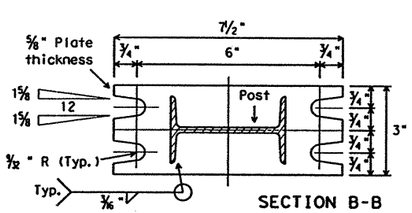

SECTION B-B

SIGN POST AND STUB POST

(For S4x7.7 and S3x5.7)

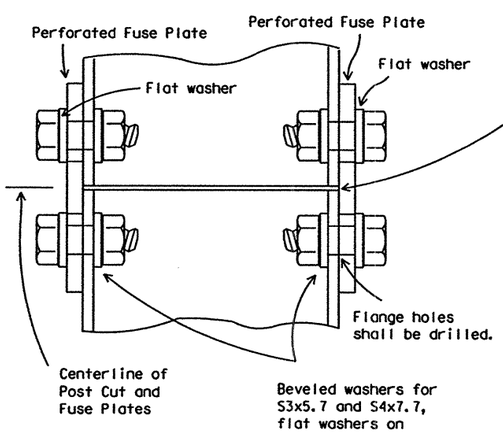

Parts shall be saw cut either before galvanizing and the galvanized cut cleaned of zinc build-up, or saw cut after galvanizing and the cut surface treated with zinc-based solder or zinc-rich paint in accordance with ASTM A780. (Cut surface will not be treated until plate is installed and all bolts fully tightened.)

DETAIL "A"

STANDARD PLANS
TEXAS DEPARTMENT OF TRANSPORTATION
Traffic Operations Division

SIGN MOUNTING DETAILS-LARGE ROADSIDE SIGNS FOUNDATION & STUB

SMD(2-2)-98

©TxDOT August 1995

DN: LR	CK: -	DN: DN	CK: -	NBG NO.:

REVISIONS	STATE DISTRICT	FEDERAL REGION	FEDERAL AID PROJECT	SHEET
4-98	22	6	NH-2002 (79)	855

COUNTY	CONTROL	SECTION	JOB	HIGHWAY
WEBB	0018	05	062, ETC	IH 35

DN: LR CK: CW DN: DN CK: MT
DATE: ACC: d58hplc/usr/d580504 FILE:
LEVELS DI. CD
1 2 3 4 5 6 7 8 9 10 11 12 13 14 15 16
17 18 19 20 21 22 23 24 25 26 27 28 29 30 31 32
33 34 35 36 37 38 39 40 41 42 43 44 45 46 47 48
49 50 51 52 53 54 55 56 57 58 59 60 61 62 63

4/18/2003
HOUFILE023 \hcivil\cf0130\
b34mp108.dgn-01

TYPICAL PLYWOOD SIGN & EXIT PANEL ASSEMBLY DETAILS

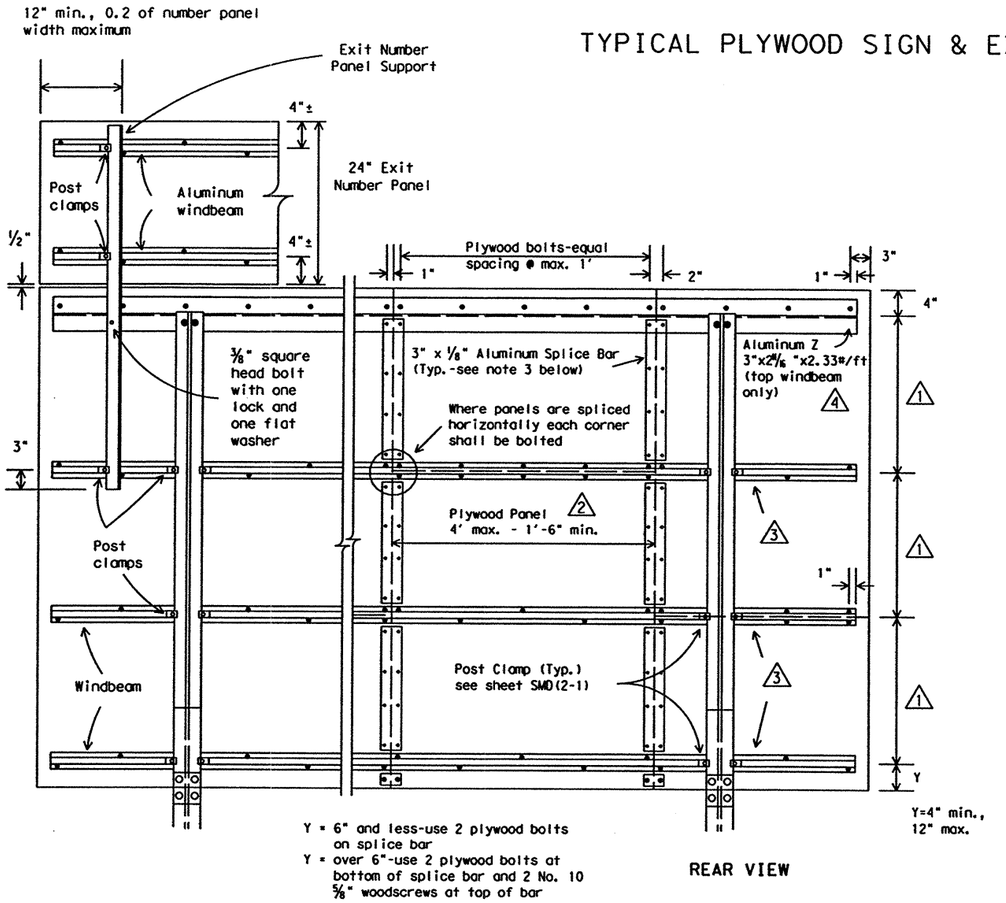

REAR VIEW

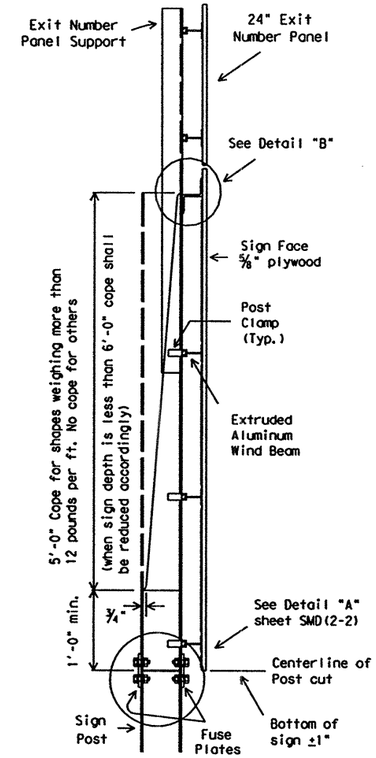

SIDE VIEW

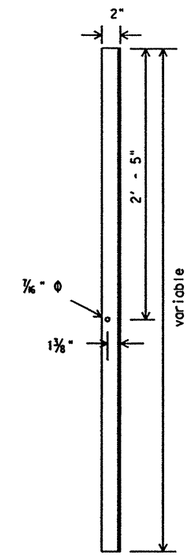

L3" x 2" x ¼" Steel Upright or L3" x 2" x ⅜" Aluminum Upright or 3" Windbeam

EXIT NUMBER PANEL SUPPORT

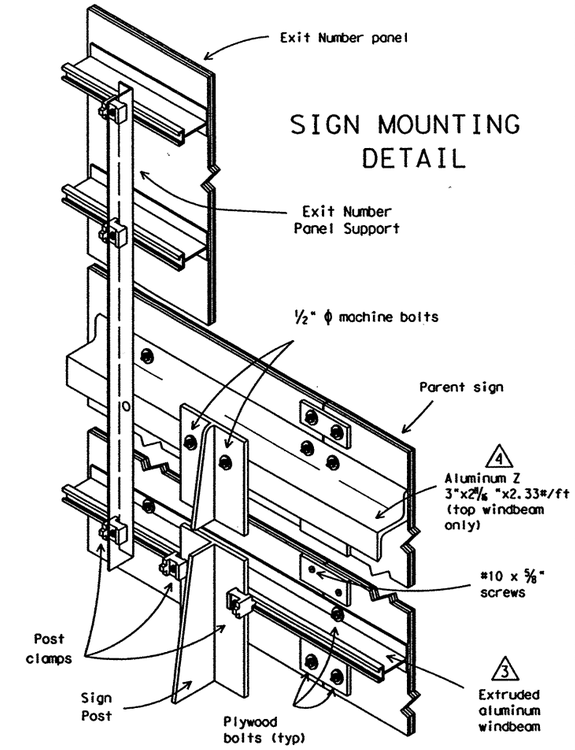

SIGN MOUNTING DETAIL

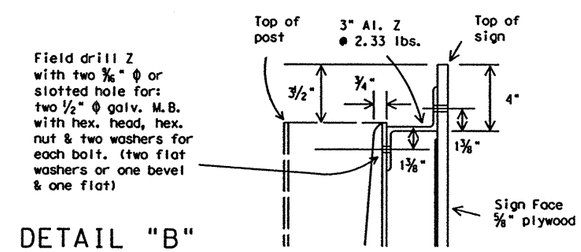

DETAIL "B"

NOTES:

1. A tolerance of plus or minus ¼inch will be permitted in the plan dimensions for fabrication of each single increment sign panel when necessary for squaring. A tolerance of plus or minus ¼inch will be permitted for each increment of a multi-increment sign panel where necessary to secure square, tight-fitting joints.
2. Plywood bolts shall be ⅝" x 1½" elevator type steel with flat or slightly hemispherical head and ¾" minimum thread length. The head shall have a minimum diameter of 9/16 " and a minimum of two fins on the underside. Each bolt shall be provided with one ⅝" steel hex nut, one ⅝" steel flat washer, and one ⅝" steel lock washer. Bolts, nuts and washers shall be galvanized in accordance with ASTM Designation: B695, Class 50, or A153 Class C or D.
3. Splice bars shall be secured with ⅝" long x #10 round head, stainless steel wood screws spaced at 6" maximum along double row spacing with the exception at extreme ends of splice bars, along outside edge of sign, where plywood bolts shall be used as shown. A maximum of one horizontal joint per vertical section will be permitted using a ⅛" gap between panels.
4. Splices shall be kept to a minimum. Panels 4'x8' or larger shall be used to the maximum extent possible in the fabrication of any sign. Signs or sign sections which cannot be fabricated from at least a 4'x8' panel shall be of one piece construction.

(1) Approximately equal spacing, fabricator may vary spacing for least interference with message and to utilize wind beam for horizontal splice. Wind beam spacing will not exceed the maximum shown in table on sheet SMD(2-1). Staggered arrangement of horizontal splices as shown is preferred. However, a single horizontal joint across the sign face is permissible.

(2) For signs 4'-0" or less in height the plywood panel may exceed 4'-0" in width.

(3) Extruded aluminum wind beams shall be continuous with no splices. (see sheet SMD(2-1).

(4) Aluminum Z will be provided unless stated otherwise in the plans. If noted elsewhere in the plans, 1.175 lb/ft extruded aluminum windbeam may be used.

NOTES:

1. Exit number panel shall be mounted to the right hand side of the parent sign for right exits and to the left for left hand exits. The number panel shall be mounted with two uprights so its right edge is even with the right edge of the parent sign or vice-versa for left hand exits.
2. Exit number panel support shall be symmetrical about number panel centerline.
3. Exit number panel support shall be of ASTM A36 structural steel galvanized after fabrication, or ASTM B221 aluminum alloy 6061-T6.
4. All bolts, nuts and washers shall be galvanized per ASTM Designation: B695 Class 50, or A153 Class C or D.
5. When splice bars are required to fabricate the number panel, the splice bar detail as shown for the parent sign is to be used. Splice bars on number panel need not align with those on parent sign.
6. Posts, parent sign panels and exit number panels shall comply with notes on sheets SMD(2-1) and SMD(2-2).
7. Signs (such as exit number panels) attached above a parent sign shall be made of the same type material as the parent sign.
8. Exit number panel support and other connection hardware required to fasten exit number panel to parent sign shall be subsidiary to the sign blank.

STANDARD PLANS
TEXAS DEPARTMENT OF TRANSPORTATION
Traffic Operations Division

SIGN MOUNTING DETAILS-LARGE ROADSIDE SIGNS, PLYWOOD

SMD(2-3)-95

©TxDOT August 1995

DN-LR	CK-	DW-DN	CK-	REG NO.:
REVISIONS				

STATE DISTRICT	FEDERAL REGION	FEDERAL AID PROJECT	SHEET
22	6	NH-2002 (79)	856

COUNTY	CONTROL	SECTION	JOB	HIGHWAY
WEBB	0018	05	062, ETC	IH 35

LEVELS D
DATE:
ACC: d58hplc/usr/d580504
FILE:
DN: LR
CK: CW
DW: DN
CK: MT
b34mp118.dgn-01 HOUFILE023 \hcivil\cf0130\ 4/18/2003

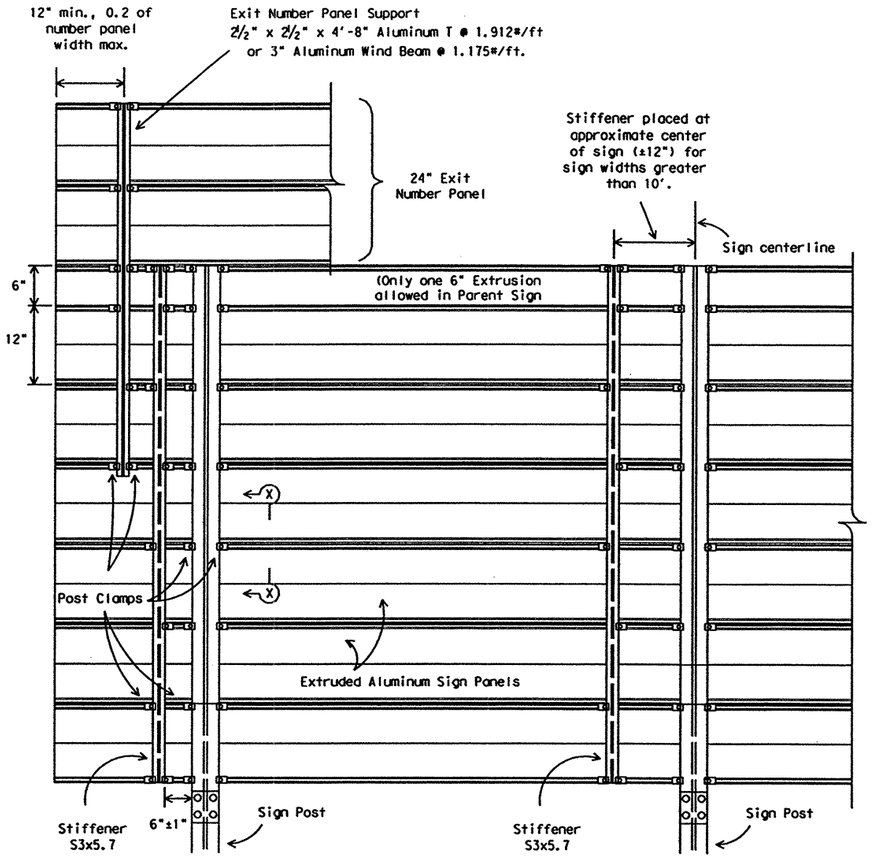

REAR VIEW

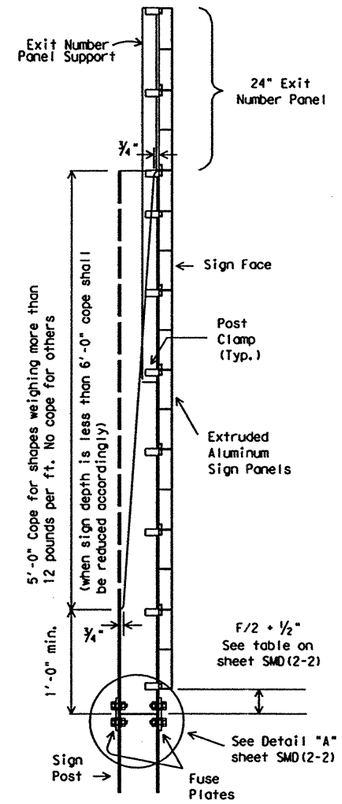

SIDE VIEW

PARENT SIGN & EXIT PANEL MOUNTING DETAILS

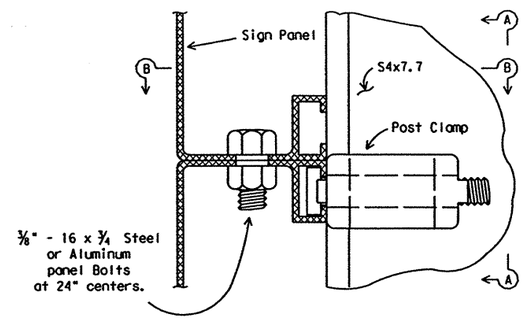

SECTION X-X

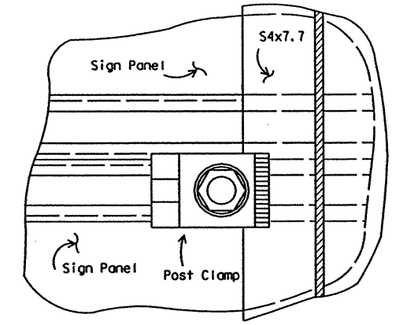

SECTION A-A

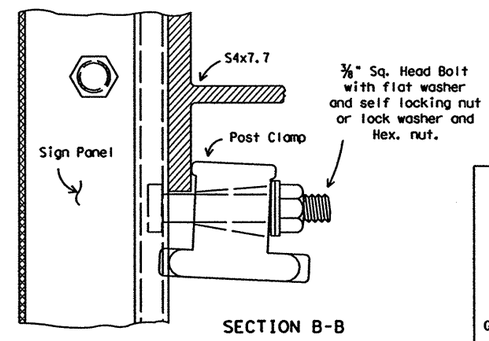

SECTION B-B

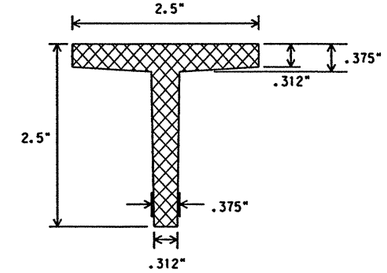

ALUMINUM T SECTION

PANEL CONNECTION DETAILS

SPECIFICATION REFERENCE TABLE MATERIALS AND TESTS DIVISION SPECIFICATIONS	
ALUMINUM SIGN BLANKS	D-9-7110
SIGN HARDWARE	D-9-7120

GENERAL NOTES:

1. Exit number panel shall be mounted to the right hand side of the parent sign for right exits and to the left for left hand exits. The number panel shall be mounted with two uprights so its right edge is even with the right edge of the parent sign or vice-versa for left hand exits.
2. Exit number panel support shall be symmetrical about number panel centerline.
3. Exit number panel support shall be ASTM A36 structural steel galvanized after fabrication, or ASTM B221 aluminum alloy 6061-T6.
4. All bolts, nuts and washers shall be galvanized per ASTM Designation: B695 Class 50, or A153 Class C or D.
5. When splice bars are required to fabricate the number panel, the splice bar detail as shown for the parent sign on sheet SMD(2-1) is to be used. Splice bars on number panel need not align with those on parent sign.
6. Posts, parent sign panels and exit number panels shall comply with notes on sheets SMD(2-1) and SMD(2-2).
7. Signs (such as exit number panels) attached above a parent sign shall be made of the same type material as the parent sign.
8. Exit number panel support and other connection hardware required to fasten exit number panel to parent sign shall be subsidiary to the sign blank.

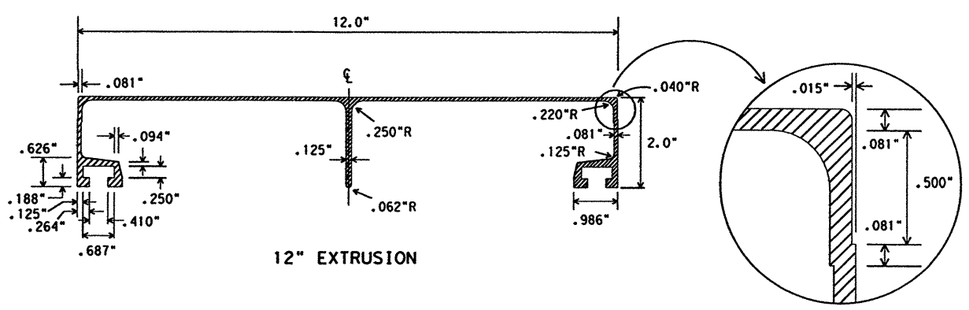

12" EXTRUSION

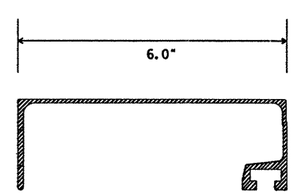

6" EXTRUSION

ALUMINUM SIGN PANEL EXTRUSION DETAILS

STANDARD PLANS
TEXAS DEPARTMENT OF TRANSPORTATION
Traffic Operations Division

SIGN MOUNTING DETAILS-LARGE ROADSIDE SIGNS, EXTRUDED ALUMINUM

SMD(2-4)-95

©TxDOT August 1995

DN: LR	CK: -	DW: DN	CK: -	NEG NO.:

REVISIONS	STATE DISTRICT	FEDERAL REGION	FEDERAL AID PROJECT	SHEET
	22	6	NH-2002 (79)	857

COUNTY	CONTROL	SECTION	JOB	HIGHWAY
WEBB	0018	05	062, ETC	IH 35

DN: LR
CK: CW
DW: DN
CK: MT
DATE:
ACC: d58hplc/usr/d580504
FILE:
LEVELS DISPLAYED

b34mp109.dgn-01 HOUFILE023 \hcivil\cf0130\ 4/18/2003

DISCLAIMER
The use of this standard is governed by the "Texas Engineering Practice Act". No warranty of any kind is made by TxDOT for any purpose whatsoever. TxDOT assumes no responsibility for the conversion of this standard to other formats or for incorrect results or damages resulting from its use.

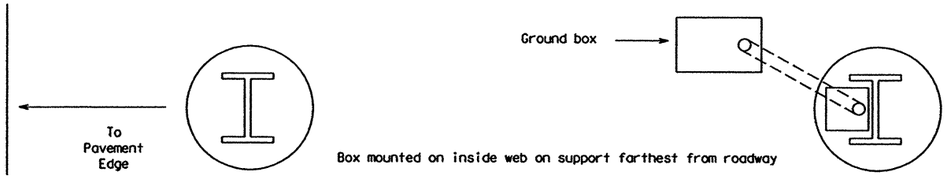

PLAN VIEW

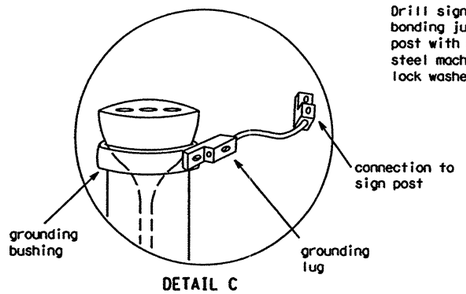

DETAIL C

2 Pull connector down tight against conduit then clamp in ground box. See Detail "D"

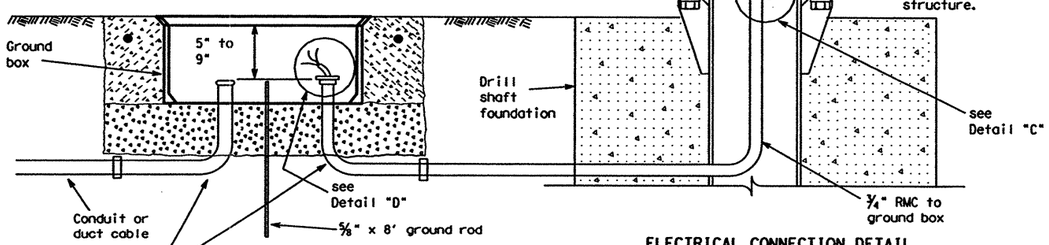

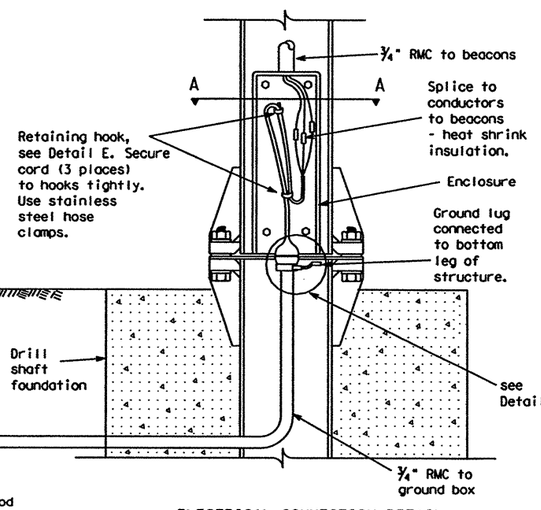

ELECTRICAL CONNECTION DETAIL

Enclosure cover not shown for clarity
Detail shows channel greater than 4 inches.
Less than 4 inches similar, see Detail A.

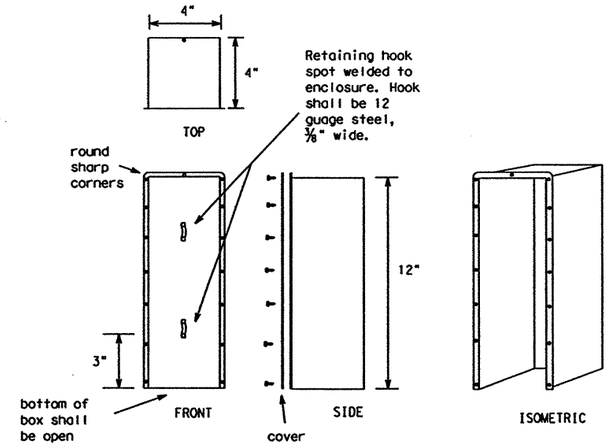

ENCLOSURE

make from 12 gauge galvanized sheet metal

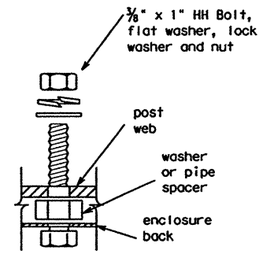

DETAIL B

enclosure connection
(4 places)
(use 2 inch bolt for 3 and 4 inch channels)

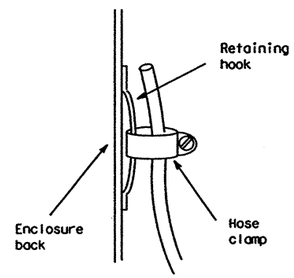

DETAIL E

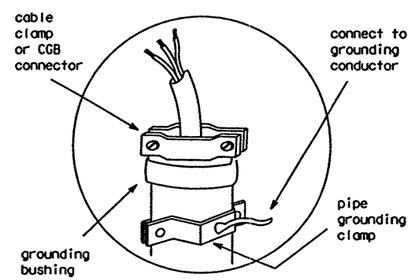

DETAIL D

Pull cable so opposite end connector is tight against conduit end, clamp cable at top of conduit as shown.

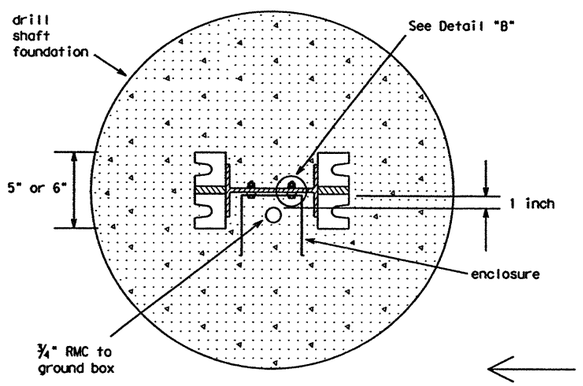

SECTION A-A

Stub-post connection
conduit, bolts and enclosure
(cover not shown)

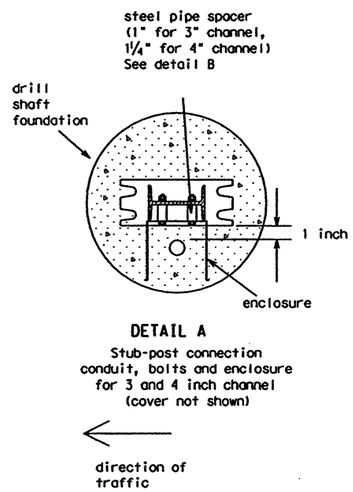

DETAIL A

Stub-post connection
conduit, bolts and enclosure
for 3 and 4 inch channel
(cover not shown)

NOTES:

1. Breakaway connector shall be rated for 300 VAC, 30 amps and shall be waterproof. Connector shall be a three pole (two line conductors and neutral) polarized elastomer connector made from thermosetting synthetic polymer which remains fexible over the temperature range of -40 degrees C to 90 degrees C. The pins on the connector shall be overmolded 1 1/4" from the face of the connector toward the tips of the pins with the same material used in the construction of the connector body. This overmolding of the pins shall provide a non-conductive double taper which prevents the intrusion of water into the connection when the connectors are fully engaged. The pin receptors shall have current carrying barrels recessed 1 1/2" from the face of the connector and surrounded by beryllium copper spring sleeves. The plug/receptacle combination shall be listed by an approved testing facility (UL or Factory Mutual) as suitable for outdoor use and shall have passed a rain test and a watertight (immersion) test as approved by the Engineer.
2. The female connector shall be integrally molded to a 13' length of type SO cord containing three number 10 or number 8 AWG conductors. The male connector shall be integrally molded to a 20" length of Type SO cord containing three number 10 or number 8 AWG conductors. Cord conductors shall have colored insulation, two black and one white, or shall be taped or painted to be two black and one white. Tape or paint marking shall cover entire exposed length. The contractor shall make a brochure submittal on cord connectors. Breakaway connector and cord shall not be paid for separately, but shall be subsidiary to the various items.
3. The contractor shall install in-line waterproof fuseholders for each line conductor in the ground box. Fuses shall be fast-acting 5 amp (Bussman KTK5, Gould ATM5, Littlefuse KLK5 or equal).
4. 1 Conduit shall convert to 3/4" liquidtight flexible metalic conduit below the fuse plate or knee joint and shall revert to 3/4" RMC above the fuse plate or knee joint. The length of liquidtight flexible metal conduit shall not exceed 6".
5. Ground rod clamp shall be Blackburn GG 5/8H, Weaver W5.8 or equal.
6. Ground rod to be driven to a depth to leave between 2 to 4 inches of rod above the gravel placed under the ground box. See ED(2) standard sheet for ground box details.

11-01 Revision

1 Liquidtight conduit size corrected.
2 Editing of minor notes.

STANDARD PLANS
Texas Department of Transportation
Traffic Operations Division

SIGN MOUNTING DETAILS- LARGE ROADSIDE SIGNS ELECTRICAL CONNECTION

SMD(2-6)-01

©TxDOT April 1998			DN: KB	CK: KB	DR: FDN	CK: CAL
REVISIONS 11-98 11-01	STATE DISTRICT	FEDERAL REGION	FEDERAL AID PROJECT			SHEET
	22	6	NH-2002 (79)			858
	COUNTY		CONTROL	SECTION	JOB	HIGHWAY
	WEBB		0018	05	062, ETC	IH 35

| DISPLAYED | | |

WING CHANNEL CLAMP DETAIL FOR TYPE G MOUNT

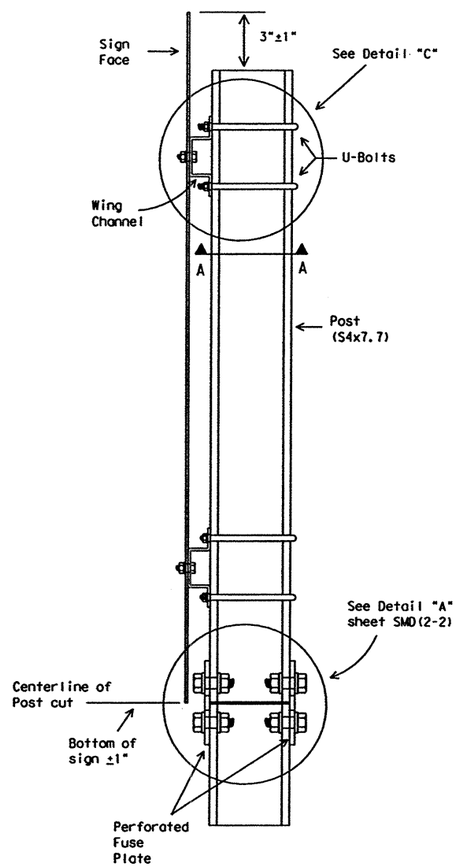

SIDE VIEW

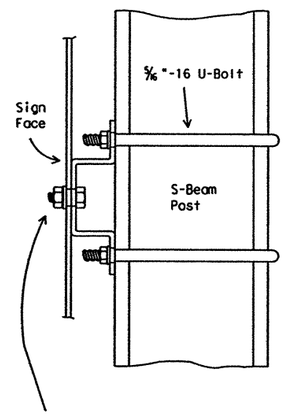

Galvanized steel or aluminum self-locking hex. head nut. 3/8 " - 16 x 3/4 " hex. head bolt for sheet metal. 3/8 " - 16 x 1 1/4 " hex. head bolt for plywood. 3/8 " galvanized medium washer.

DETAIL "C"

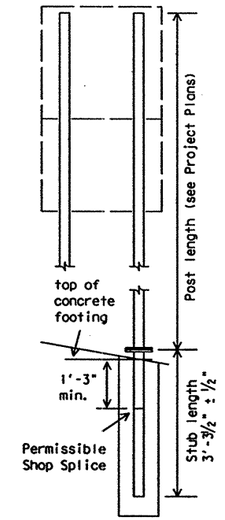

The weight of one S4x7.7 post is equal to 112.2 lbs. plus 7.7 lbs./ft x (post length in feet minus 10 ft). The weight of 112.2 lbs. includes 10 feet of post length, post foundation stub, related connection plates, friction fuse plate, and all high strength bolts, nuts and washers.

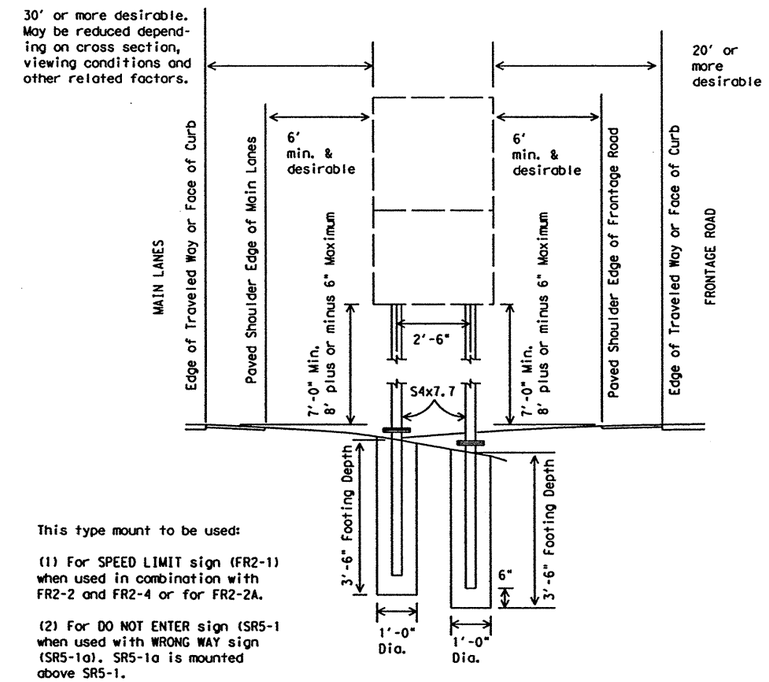

This type mount to be used:

(1) For SPEED LIMIT sign (FR2-1) when used in combination with FR2-2 and FR2-4 or for FR2-2A.

(2) For DO NOT ENTER sign (SR5-1 when used with WRONG WAY sign (SR5-1a). SR5-1a is mounted above SR5-1.

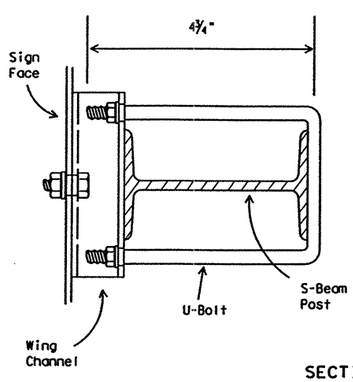

SECTION A-A

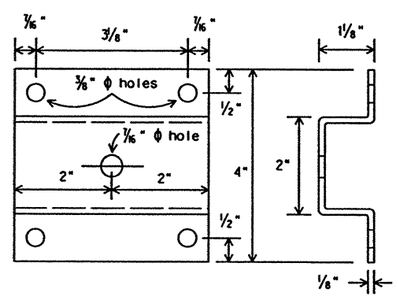

WING CHANNEL

Wing channel, 4" width x 1 1/8" depth x 1/8" thickness, shall be aluminum (ASTM B221 6061-T6 or B308 6061-T6), galvanized steel (ASTM A36) or stainless steel (ASTM A167 type 304, No. 2B finish).

SPECIFICATION REFERENCE TABLE
MATERIALS AND TESTS DIVISION SPECIFICATIONS
SIGN HARDWARE D-9-7120

GENERAL NOTES:

1. Design conforms with AASHTO Specifications for the design and construction of structural supports for highway signs.
2. Materials and fabrication shall conform to the requirements of the Department material specifications.
3. Structural steel shall be high strength steel (HS) in accordance with Item 442, "Metal For Structures."
4. Parts shall be saw cut either before galvanizing and the galvanized cut cleaned of zinc build-up, or saw cut after galvanizing and the cut surface treated with zinc-based solder or zinc-rich paint in accordance with ASTM A780. (Cut surface will not be treated until plate is installed and all bolts fully tightened.)

STANDARD PLANS
TEXAS DEPARTMENT OF TRANSPORTATION
Traffic Operations Division

SIGN MOUNTING DETAILS, TYPE G SUPPORT

SMD(TY G)-97

ORIG DRAW DATE: August 1995	DN:-LR	CK:-	DW:-DN	CK:-	NEG NO.:
REVISIONS 1-97	STATE DISTRICT	FEDERAL REGION	FEDERAL AID PROJECT		SHEET
	22	6	NH-2002 (79)		859
	COUNTY		CONTROL	SECTION	JOB	HIGHWAY
	WEBB		0018	05	062, ETC	IH 35

DISCLAIMER
The use of this standard is governed by the "Texas Engineering Practice Act". No warranty of any kind is made by TxDOT for any purpose whatsoever. TxDOT assumes no responsibility for the conversion of this standard to other formats or for incorrect results or damages resulting from its use.

DN: CK: DW: CK:
DATE: ACC: FILE:
LEVELS DISPLAYED

b34mp111.dgn-01 HOUFILE023 \hcivil\cf0130\ 4/18/2003

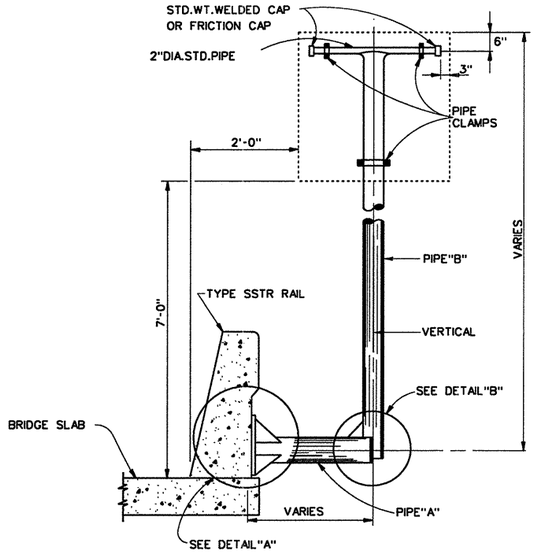

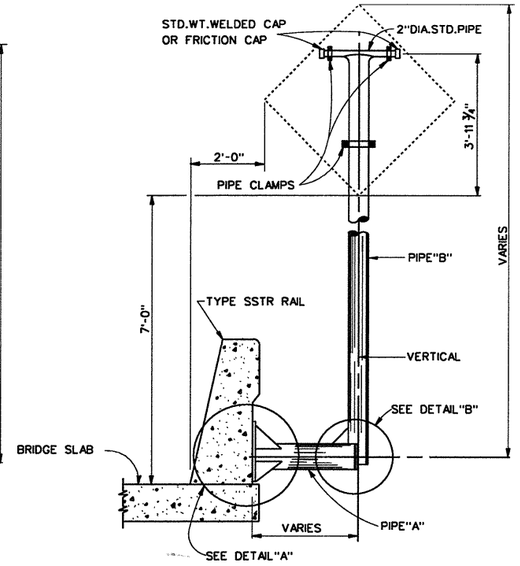

BRIDGE MOUNTED SIGNS

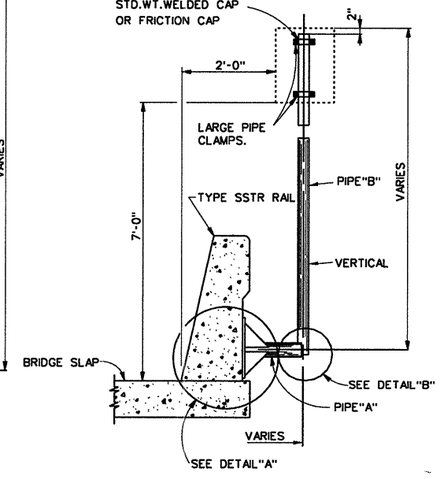

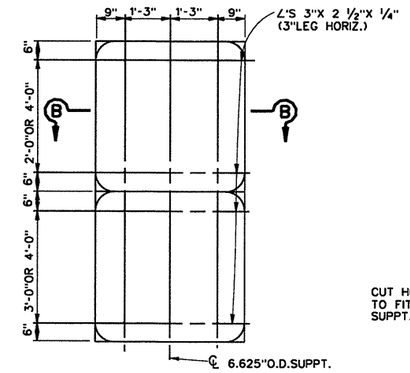

R2-1(48x60) & R2-4(48x60)
R5-1a(48x36) & R5-1(48x48)

TABLE OF PIPE SIZES			
SIGN AREA S.F.	PIPE A SIZE	PIPE B SIZE	CORRESPONDING TYPE GROUND MOUNT
1-10	4.500"O.D.X 0.337"W.T.	3.500"O.D.X 0.300"W.T.	10 BWG(1)SA(P)
10-16	8.625"O.D.X 0.332"W.T.	4.500"O.D.X 0.337"W.T.	10 BWG(1)SA(T)
16-32	8.625"O.D.X 0.332"W.T.	6.625"O.D.X 0.280"W.T.	S80(1)SA(T) S80(1)SA(U) S80(1)SA(U-1EXT)
32-40	8.625"O.D.X 0.332"W.T.	6.625"O.D.X 0.432"W.T.	S80(2)SA(P) S80(1)SA(U-2EXT)

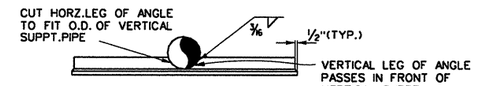

SECTION B-B

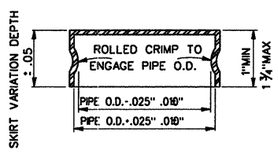

FRICTION CAP

NOTES:

FRICTION CAPS-MANUFACTURED FROM HOT OR COLD ROLLED STEEL SHEETS, SIZED FOR DRIVE FRICTION FIT, AND SO FORMED AS TO HAVE NO TENDENCY TO ROCK WHEN SEATED.THEY SHALL BE FREE OF SHARP INDENTATIONS AND EVIDENCE OF METAL FRACTURE, WITH RIMS REASONABLY STRAIGHT AND SMOOTH.

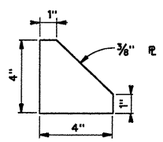

3/8"℞ STIFFENER

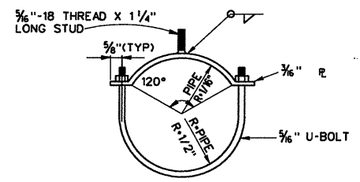

PLAN

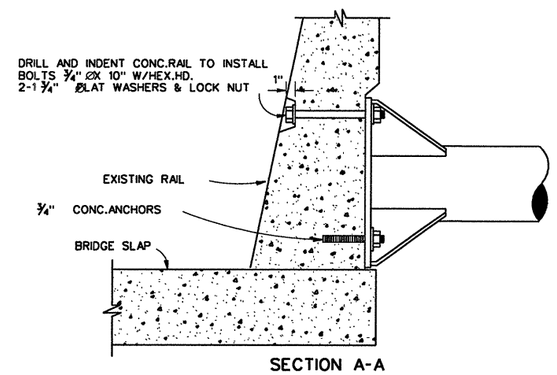

SECTION A-A
(SHOWING EXISTING RAILING)

NOTES:

CONTRACTOR ~~SHALL~~ CHECK CROSS SLOPE ON BRIDGES AND THEN FABRICATE SIGN MOUNTS SO SIGN SUPPORT PIPE IS VERTICAL.

ADDITIONAL"U" OR "T" EXTENSION PIPE OF THE SIZE AND LENGTHS SHOWN ON STANDARD PLAN SHEETS ~~SHALL BE~~ PROVIDED AND ATTACHED (WELDED OR AS DIRECTED BY THE ENGINEER) TO PIPE "B" AS REQUIRED.

SIGN PANELS ~~SHALL BE~~ ATTACHED TO THE 3" DIA. OR SMALLER PIPE ARMS AS SHOWN IN THE STANDARD PLAN SHEETS. ATTACHMENT TO 4" OR 6" PIPES ~~SHALL BE~~ AS SHOWN ON THIS SHEET OR AS SHOWN IN STANDARD PLAN SHEETS EXCEPT FOR R2-1 AND R2-4 OR R5-1A AND R5-1 SIGN COMBINATIONS WHICH ~~SHALL BE~~ MOUNTED AS SHOWN ON THIS SHEET.

LOCK NUTS WITH NONREVERSIBLE HIGH TENSILE STRENGTH STAINLESS STEEL LOCKING PINS ~~SHALL BE~~ USED ON BOLTS.

CONCRETE ANCHORS ~~SHALL BE~~ STANDARD 3 UNIT CONCRETE ANCHORS. RAWL, PARABOLT, KWIKBOLT OR EQUAL, WITH LOCK NUT, FLAT WASHER & LOCK WASHER. ANCHORS ~~SHALL NOT BE~~ LESS THAN 4 1/2" IN LENGTH.

SIGN SUPPORTS ~~SHALL BE~~ GALVANIZED AFTER FABRICATION.

SIGN SUPPORT BRACKETS AS DETAILED ON THIS SHEET ARE FOR SIGNS MOUNTED ON RIGHT SIDE OF ROADWAY. LEFT HAND BRACKETS ~~SHALL BE~~ OPPOSITE TO THOSE SHOWN. SEE SIGN LAYOUT SHEETS TO DETERMINE WHETHER RIGHT OR LEFT HAND BRACKET IS REQUIRED.

ANY CHIPPING, GOUGING, OR OTHER WORK, TOOLS OR ANY OTHER INCIDENTALS NECESSARY TO EFFECT THE INSTALLATION OF BRIDGE MOUNTED SIGN BRACKETS ON CURBS, PARAPET WALLS, COPINGS OR OTHER LOCATIONS AS CALLED FOR IN PLANS ~~WILL NOT~~ BE PAID FOR DIRECTLY BUT ~~SHALL BE~~ CONSIDERED SUBSIDIARY TO THE ITEM "SMALL ROADSIDE SIGN SUPPORTS AND ASSEMBLIES".

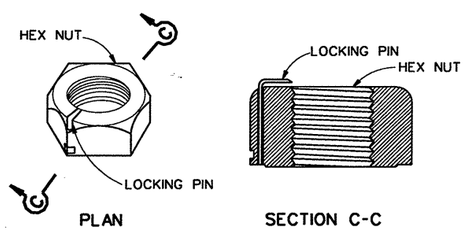

PLAN SECTION C-C

LOCK NUT DETAIL

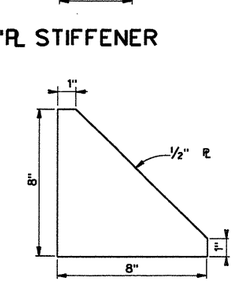

1/2"℞ STIFFENER

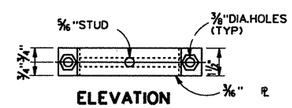

ELEVATION

LARGE PIPE CLAMP

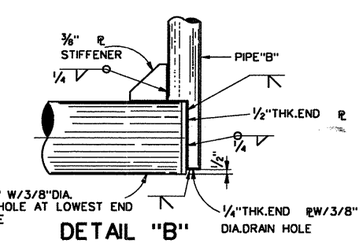

DETAIL "B"

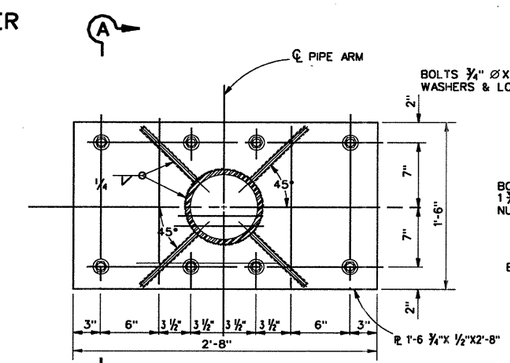

A DETAIL "A"

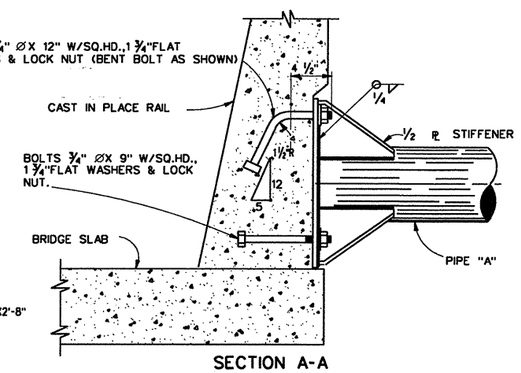

SECTION A-A
(SHOWING CAST IN PLACE RAIL)

DATE	BY	REV	REVISION

STATE OF TEXAS
RAYMOND C. BARKER
44988
REGISTERED PROFESSIONAL ENGINEER

THE SEAL APPEARING ON THIS DOCUMENT WAS AUTHORIZED BY RAYMOND C. BARKER PE 44988, ON NOVEMBER 06, 2007

Raymond C. Barker

KBR

Engineered by KBR Technical Services, Inc

© 2007 Texas Department of Transportation

IH 35
LOOP 20 TO UNIROYAL ROAD

BRIDGE MOUNTING DETAILS (FOR SMALL ROADSIDE SIGNS)

SHEET 1 OF 1

FED RD DIV NO	FEDERAL PROJECT NO		SHEET NO
6	MG 2001 (623)		859A
STATE	STATE DIST NO	COUNTY	
TEXAS	22	WEBB	
CONT	SECT	JOB	HIGHWAY NO
0018	06	138	IH 35

.dgn- HOUFILE023\hciviln\b21smp09.dgn\
b21smp09 .dgn- HOUFILE023\hciviln\b21smp09.dgn\

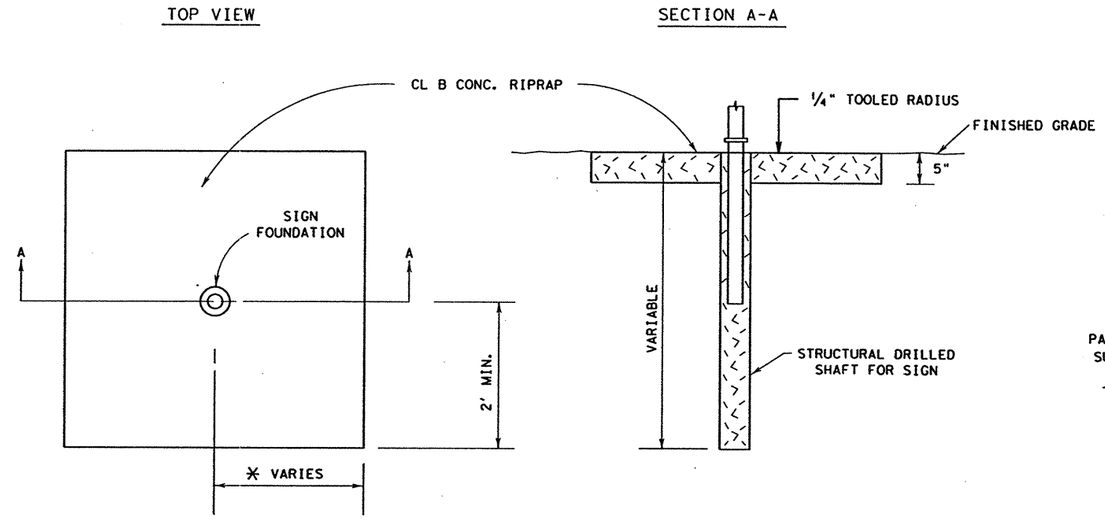

SMALL ROADSIDE SIGNS OR CANTILEVER SIGNS

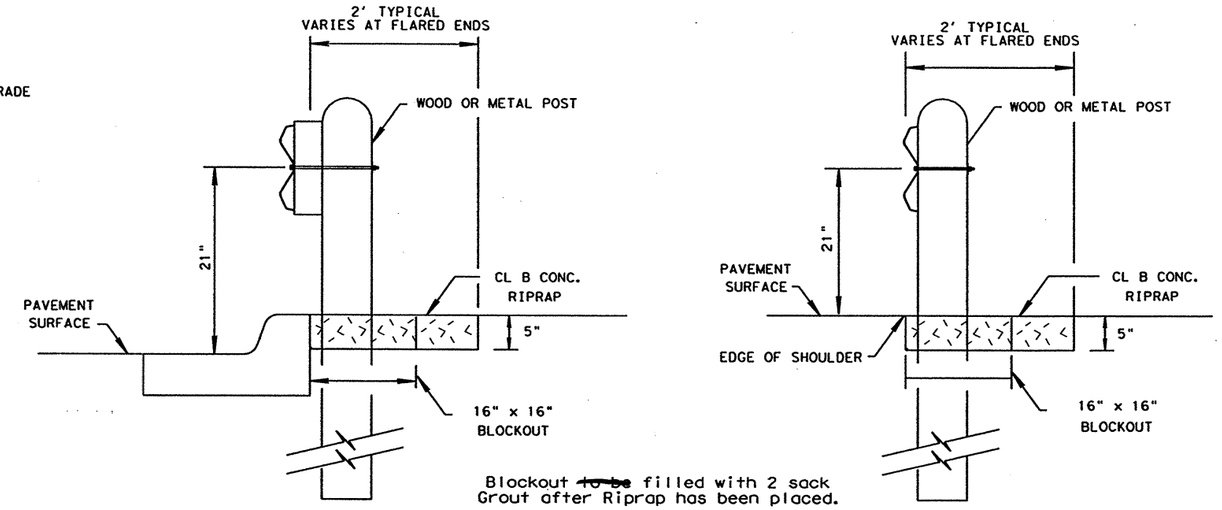

Blockout ~~to be~~ filled with 2 sack Grout after Riprap has been placed.

METAL BEAM GUARD FENCE

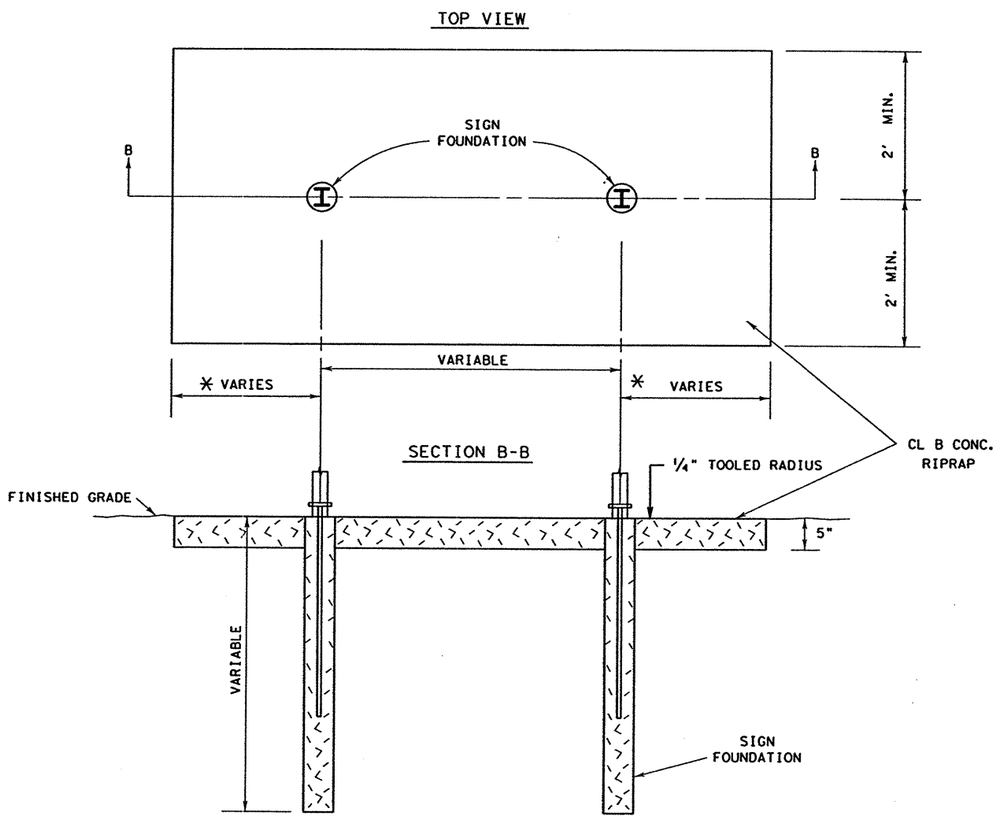

LARGE GROUND MOUNTED GUIDE SIGNS OR OVERHEAD SIGN BRIDGES

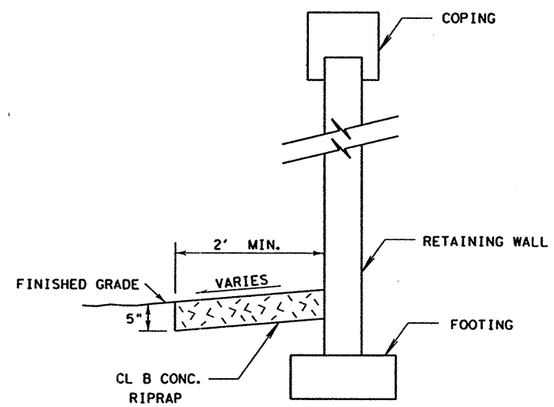

RETAINING WALL

GENERAL NOTES:

THE THICKNESS OF THE CONCRETE RIPRAP ~~SHALL NOT BE~~ APPLIED TO THE STRUCTURAL DRILLED SHAFT FOR SIGNS SO AS TO SHORTEN THE REQUIRED DRILL SHAFT LENGTH.

THIS TREATMENT ~~SHALL BE~~ PROVIDED FOR ALL SIGNS, METAL BEAM GUARD FENCE AND RETAINING WALLS REQUIRING VEGETATION CONTROL OR AS DIRECTED BY THE ENGINEER.

PAYMENT FOR RIPRAP ~~SHALL BE~~ IN ACCORDANCE WITH ITEM 432, "RIPRAP".

ALL RIPRAP CONCRETE ~~SHALL BE~~ CLASS "B".

REINFORCEMENT FOR RIPRAP ~~SHALL BE~~ WWF 6X6-W2.9XW2.9

✳ FOR LARGE GROUND MOUNTED GUIDE SIGNS AND ~~SMALL~~ ROADSIDE SIGNS, THE RIPRAP SHOULD EXTEND TO THE OUTSIDE LATERAL EDGES OF THE SIGNS. HOWEVER, IN THOSE INSTANCES WHERE THE EDGE OF THE SIGN DOES NOT EXTEND 2' FROM THE POST, A 2' MINIMUM DIMENSION WILL BE UTILIZED.

✳ FOR OVERHEAD SIGN BRIDGES AND CANTILEVER SIGN MOUNTS THE DIMENSIONS ~~SHALL BE~~ MEASURED FROM OUTSIDE EDGE OF DRILL SHAFTS.

CONCRETE RIPRAP FOR VEGETATION CONTROL

LAREDO DISTRICT

ORIGINAL DRAWING: 8/92	vegcontrol.dgn	FED. RD. DIV. NO.	PROJECT NO.	SHEET NO.
DATE	REVISIONS	6	NH-2002 (79)	860
10/98	District Update	STATE	STATE DIST. NO. / COUNTY	
		TEXAS	22 / WEBB	
		CONT.	SECT. / JOB / HIGHWAY NO.	
		0018	05 / 062, ETC / IH 35	

© 1998 TxDOT

4/18/2003

HOUFILE023 \hcivil\cf0130\ b34mp115.dgn-01

DISCLAIMER
The use of this standard is governed by the "Texas Engineering Practice Act". No warranty of any kind is made by TxDOT for any purpose whatsoever. TxDOT assumes no responsibility for the conversion of this standard to other formats or for incorrect results or damages resulting from its use.

TWO LANE TWO-WAY ROADWAY WITH OR WITHOUT SHOULDERS

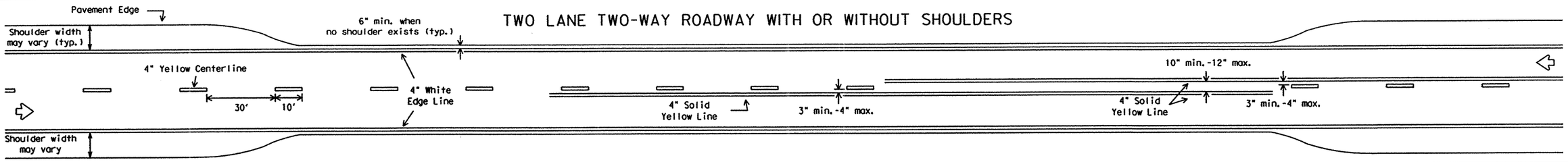

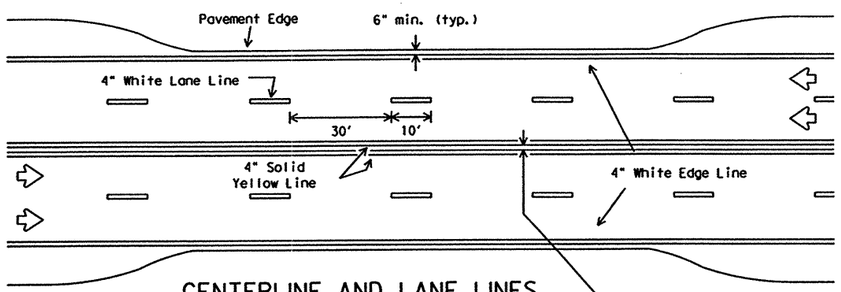

CENTERLINE AND LANE LINES FOUR LANE TWO-WAY ROADWAY WITH OR WITHOUT SHOULDERS

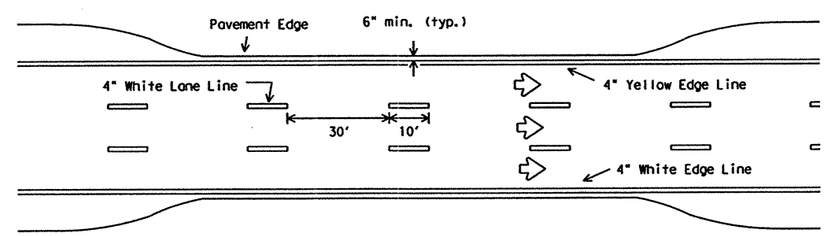

EDGE LINE AND LANE LINES ONE-WAY ROADWAY WITH OR WITHOUT SHOULDERS

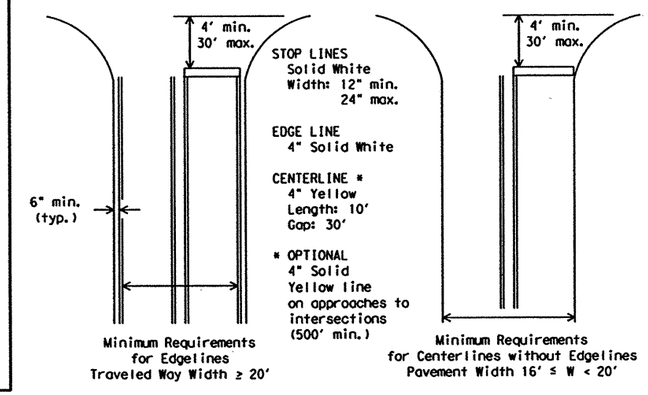

GUIDE FOR PLACEMENT OF STOP LINES, EDGE LINE & CENTERLINE

Based on Traveled Way and Pavement Widths for Undivided Highways

FOUR LANE DIVIDED ROADWAY INTERSECTIONS

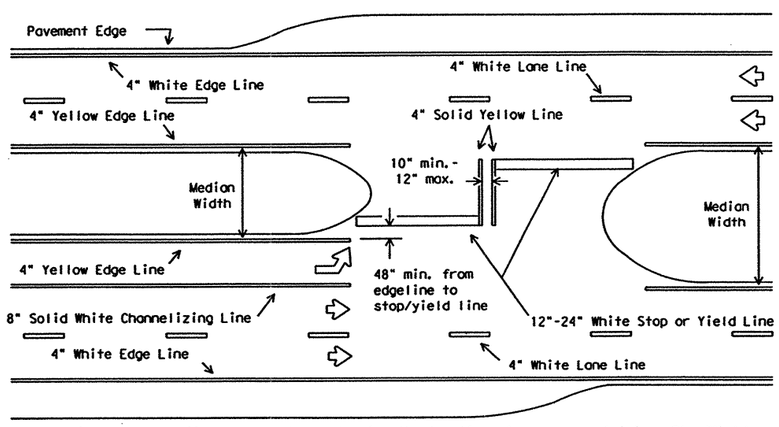

All medians shall be field measured to determine the location of necessary striping. Stop/Yield bars and centerlines shall be placed when the median width is greater than 30 ft. The median width is defined as the area between two roadways of a divided highway measured from edge of traveled way to edge of traveled way. The median excludes turn lanes. The median width might be different between intersections, interchanges and of opposite approaches of the same intersection. The narrow median width will be the controlling width to determine if markings are required.

ROADWAYS WITH REDUCED SHOULDER WIDTHS ACROSS BRIDGE OR CULVERT

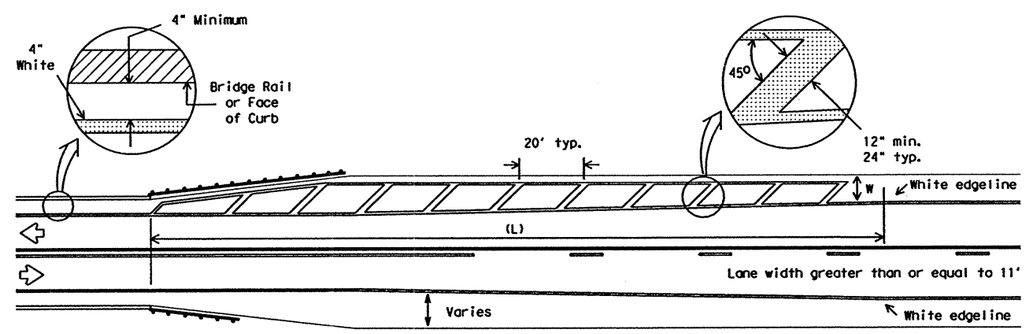

NOTES:

1. No-passing zone on bridge approach is optional but if used, it shall be a minimum 500 feet long.
2. For crosshatching length (L) see Table 1.
3. The width of the offset (W) and the required crosshatching width is the full shoulder width in advance of the bridge.
4. The crosshatching should be required if the shoulder width in advance of the bridge is 4 foot or wider and any reduction in shoulder width across the bridge occurs.
5. For guard fence details, refer elsewhere in the plans.

TABLE 1 - TYPICAL LENGTH (L)

Posted Speed *	Formula
30, 35, 40	$L = \frac{WS^2}{60}$
45, 50, 55, 60, 65, 70	L=WS

* 85th Percentile Speed may be used on roads where traffic speeds normally exceed the posted speed limit. Crosshatching length should be rounded up to nearest 5 foot increment.

L=Length of Crosshatching (FT.) W=Width of Offset (FT.)
S=Posted Speed (MPH)

EXAMPLES:

An 8 foot shoulder in advance of a bridge reduces to 4 feet on a 70 MPH roadway. The length of the cross-hatching should be:

$L = 8 \times 70 = 560$ ft.

A 4 foot shoulder in advance of a bridge reduces to 2 feet on a 40 MPH roadway. The length of the cross-hatching should be:

$L = 4(40)^2 / 60 = 106.67$ ft. rounded to 110 ft.

GENERAL NOTES:

Edgeline striping shall be as shown in the plans or as directed by the Engineer. The edgeline should typically be placed a minimum of 6 inches from the edge of pavement. This distance may vary due to pavement raveling or other conditions. Edgelines are not required in curb and gutter sections of roadways.

The traveled way includes only that portion of the roadway used for vehicular travel and not the parking lanes, sidewalks, berms and shoulders. The traveled ways shall be measured from the inside of edgeline to inside of edgeline of a two lane roadway.

All pavement marking materials shall meet the required Departmental Material Specifications as specified by the plans.

SPECIFICATION REFERENCE TABLE

MATERIAL SPECIFICATIONS	
PAVEMENT MARKERS (REFLECT.)	DMS-4200
EPOXY	DMS-6100
BITUMINOUS ADHESIVE FOR PAVEMENT MARKERS	DMS-6130

YIELD LINES

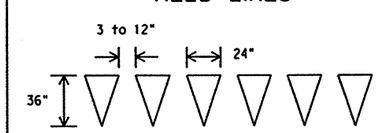

FOR POSTED SPEED EQUAL TO OR GREATER THAN 45 MPH

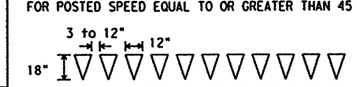

FOR POSTED SPEED EQUAL TO OR LESS THAN 40 MPH

STANDARD PLANS
Texas Department of Transportation
Traffic Operations Division
traffic

TYPICAL STANDARD PAVEMENT MARKINGS

PM(1)-03

©TxDOT November 1978

DN: BAS	CK: GRB	DW: FDN	CK: CAL	MSG NO.:

REVISIONS	STATE DISTRICT	FEDERAL REGION	FEDERAL AID PROJECT	SHEET
8-95	22	6	NH-2002 (79)	861
5-00				
8-00				
3-03				

COUNTY	CONTROL	SECTION	JOB	HIGHWAY
WEBB	0018	05	062, ETC	IH 35

DISPLAYED ACC:
1 2 3 4 5 6 7 8 9 10 11 12 13 14 15 16
1 7 8 9 92 92 92 92 92 92 92 92 93 93 132
33 34 35 93 75 93 94 94 114 124 134 144 154 164 748
95 95 115 125 135 145 155 165 175 185 195 205 215 225 263

REFLECTIVE RAISED PAVEMENT MARKERS
FOR VEHICLE POSITIONING GUIDANCE

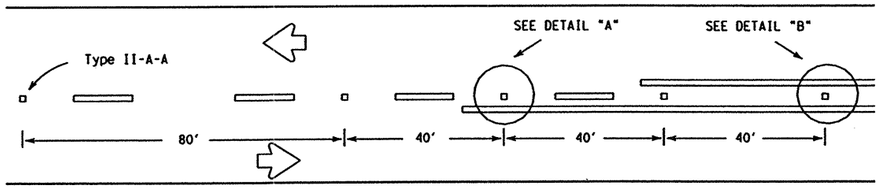

CENTERLINE FOR ALL TWO LANE ROADWAYS

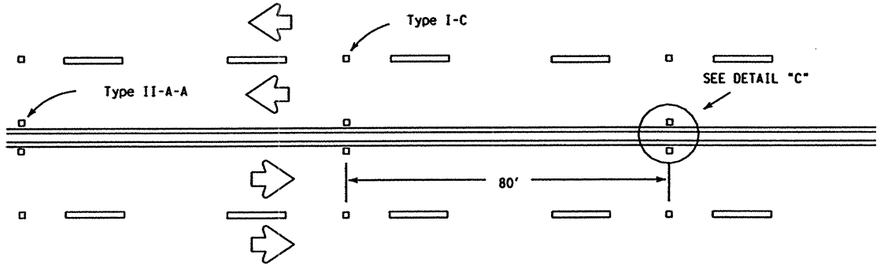

CENTERLINE & LANE LINES
FOR FOUR LANE TWO-WAY HIGHWAYS

Raised pavement marker Type I-C, clear face toward normal traffic, shall be placed on 80-foot centers.

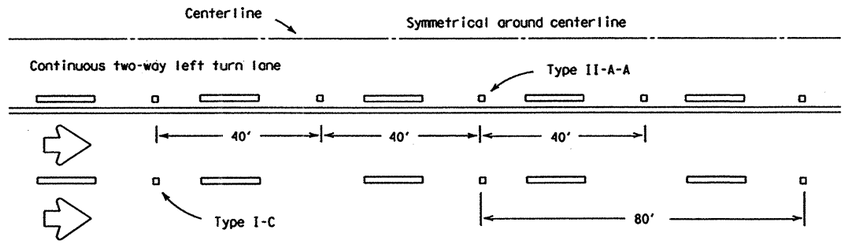

CENTERLINE AND LANE LINES FOR TWO-WAY LEFT TURN LANE

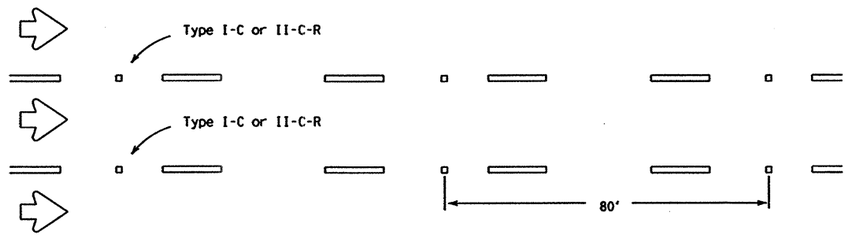

LANE LINES FOR ONE-WAY ROADWAY (NON-FREEWAY FACILITIES)

Raised pavement markers Type II-C-R shall have clear face toward normal traffic and red face toward wrong-way traffic.

As required by the Engineer or shown elsewhere in the plans, Type II-C-R or Type I-C markers may be placed on 40-foot centers for the below listed conditions:

1. horizontal curves,
2. continuously illuminated sections,
3. high volume roadways
4. or roadways where safety concerns exist.

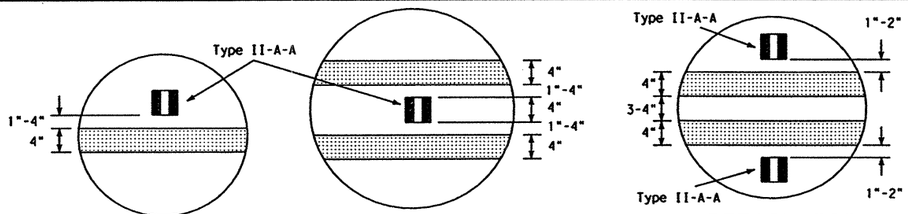

DETAIL "A" DETAIL "B" DETAIL "C"

RAISED PAVEMENT MARKERS
(REFLECTORIZED)

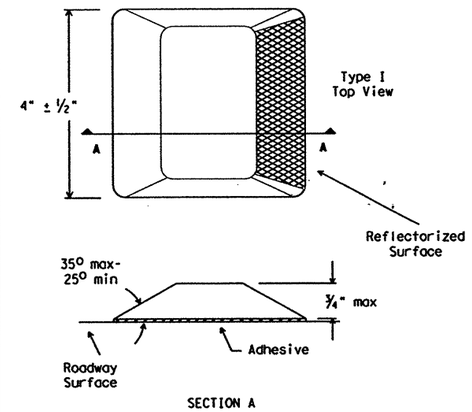

SECTION A

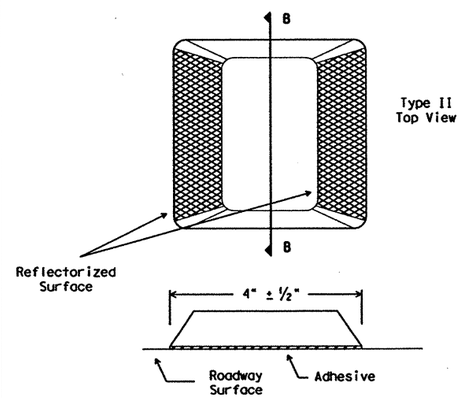

SECTION B

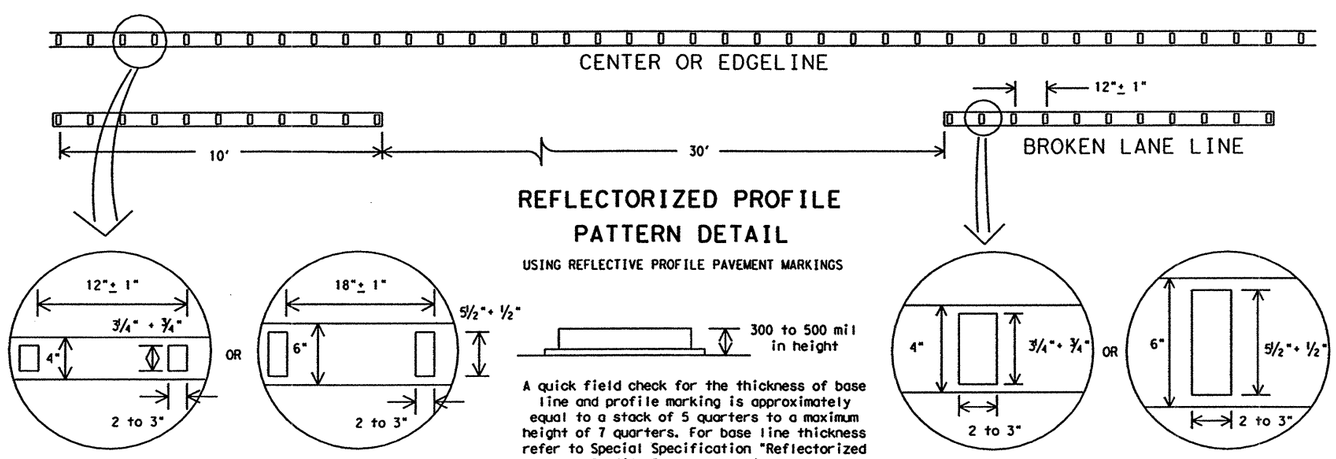

4" EDGE LINE OR CENTERLINE

OPTIONAL 6" EDGE LINE OR CENTERLINE

REFLECTORIZED PROFILE PATTERN DETAIL

USING REFLECTIVE PROFILE PAVEMENT MARKINGS

A quick field check for the thickness of base line and profile marking is approximately equal to a stack of 5 quarters to a maximum height of 7 quarters. For base line thickness refer to Special Specification "Reflectorized Profile Pavement Markings."

4" LANE LINE

OPTIONAL 6" LANE LINE

GENERAL NOTES:

All raised pavement markers placed in broken lines shall be placed in line with and midway between the stripes.

On concrete pavements the raised pavement markers should be placed to one side of the longitudinal joints.

All pavement marking materials shall meet the required Departmental Material Specifications as specified by the plans.

SPECIFICATION REFERENCE TABLE

MATERIAL SPECIFICATIONS	
PAVEMENT MARKERS (REFLECT.)	DMS-4200
EPOXY	DMS-6100
BITUMINOUS ADHESIVE FOR PAVEMENT MARKERS	DMS-6130

STANDARD PLANS
Texas Department of Transportation
Traffic Operations Division

POSITION GUIDANCE USING RAISED MARKERS
REFLECTORIZED PROFILE MARKINGS

PM(2)-00A

©TxDOT April 1977

DN: - BAS	CK: - GRB	DW: - FDN	CK: - CAL

REVISIONS	STATE DISTRICT	FEDERAL REGION	FEDERAL AID PROJECT	SHEET
10-86	22	6	NH-2002 (79)	862
4-92				
5-00				
8-00				

COUNTY	CONTROL	SECTION	JOB	HIGHWAY
WEBB	0018	05	062, ETC	IH 35

DISCLAIMER
The use of this standard is governed by the "Texas Engineering Practice Act". No warranty of any kind is made by TxDOT for any purpose whatsoever. TxDOT assumes no responsibility for the conversion of this standard to other formats or for incorrect results or damages resulting from its use.

DISPLAYED ACC:

b34mp156.dgn-01 HOUFILE023 \hcivil\cf0130 4/18/2003

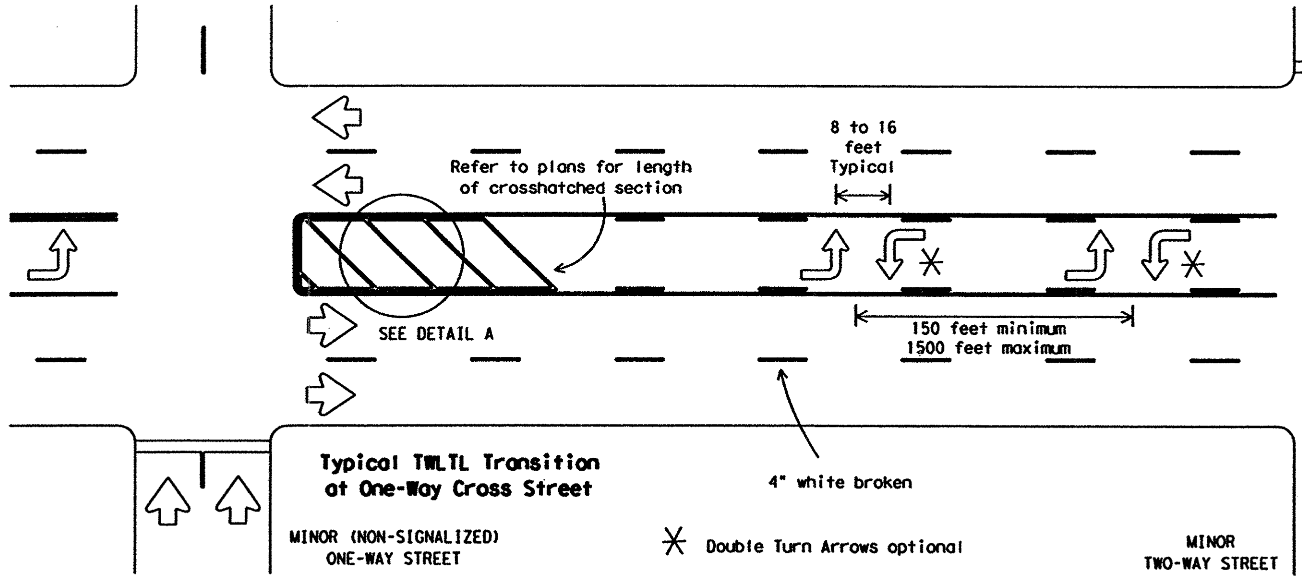

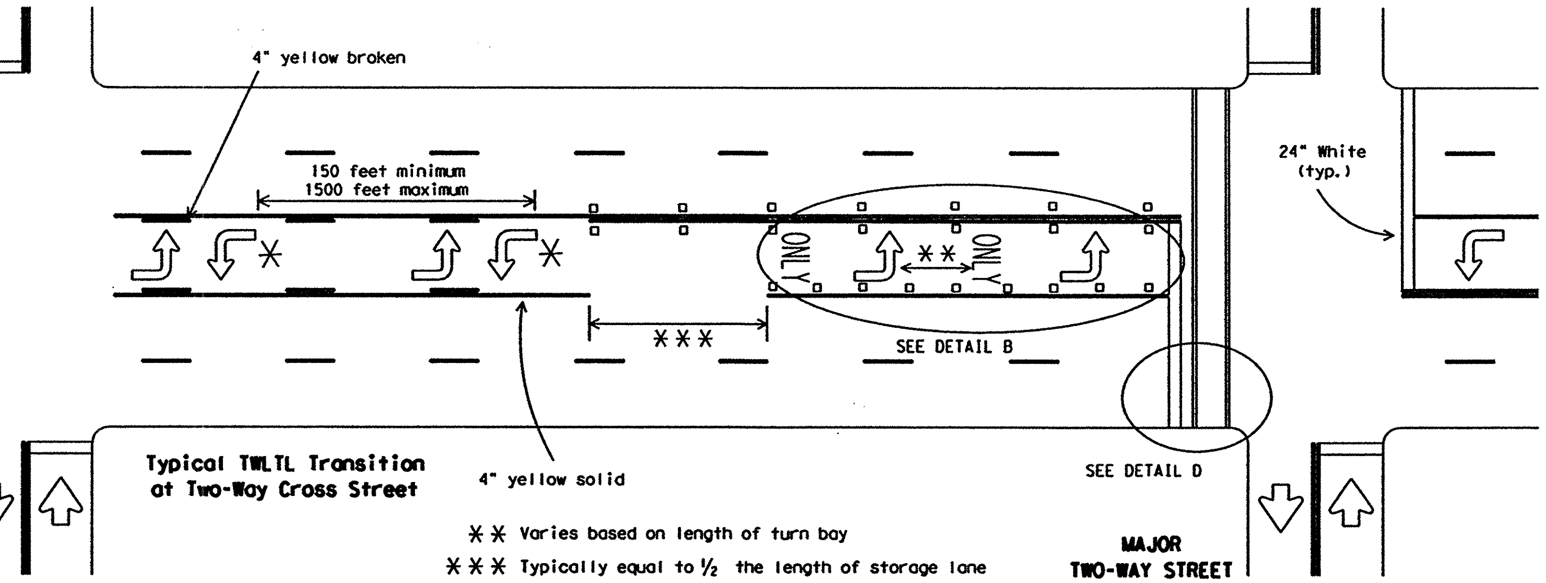

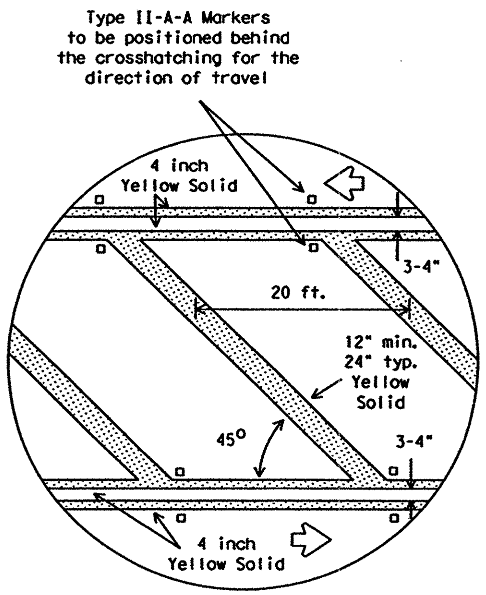

DETAIL A

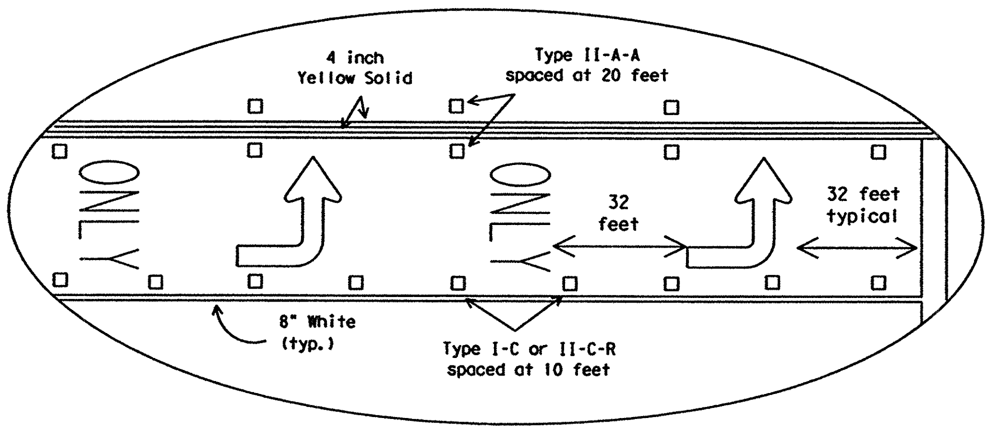

DETAIL B

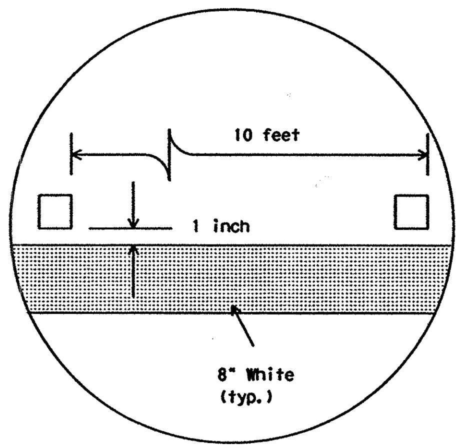

DETAIL C

Raised pavement marker
Type I-C with undivided
highways, flush medians
and two way left turn lanes.
Raised pavement marker
Type II-C-R with divided
highways and raised medians.

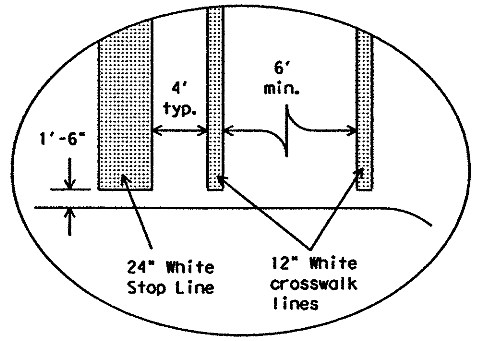

DETAIL D

Final placement
of Stop Bar and
Crosswalk shall
be approved by
the Engineer in
the field.

GENERAL NOTES

Refer elsewhere in plans for additional RPM placement and details.

Details for words and arrows as shown on other sheets.

All pavement marking materials shall meet the required Departmental Material Specifications as specified by the plans.

For a left turn bay, two sets of words and arrows shall be used if the length of the bay is equal to or greater than 180 feet. The bottom of the first ONLY shall be placed at the beginning of the turn bay lane line as shown above.

Other crosswalk paterns as shown in the "Texas Manual on Uniform Traffic Control Devices" may be used.

SPECIFICATION REFERENCE TABLE

MATERIAL SPECIFICATIONS

PAVEMENT MARKERS (REFLECT.)	DMS-4200
EPOXY	DMS-6100
BITUMINOUS ADHESIVE FOR PAVE. MKS.	DMS-6130

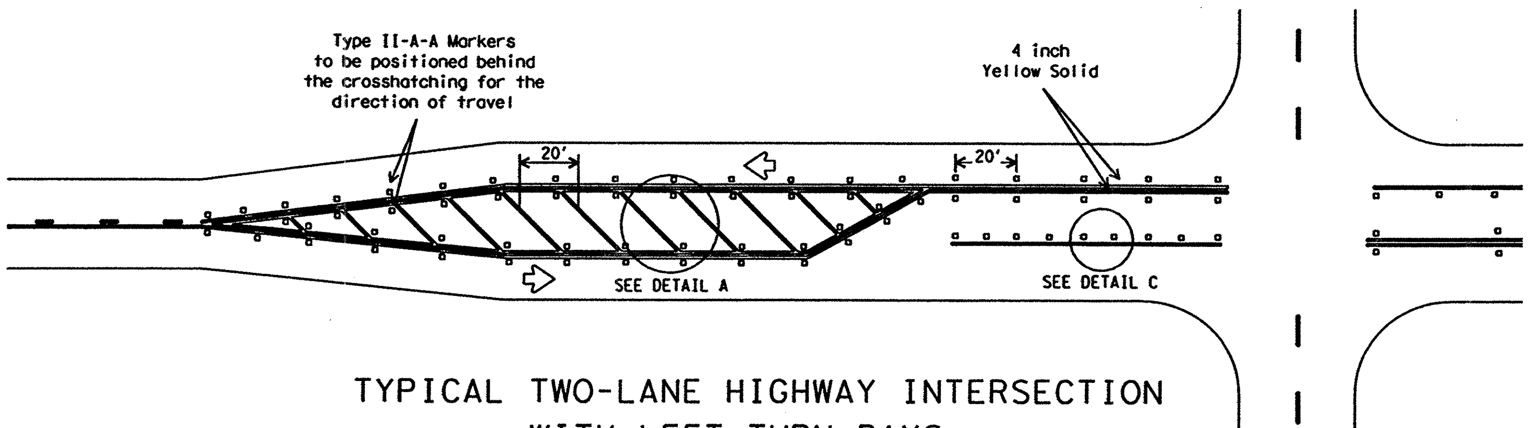

TYPICAL TWO-LANE HIGHWAY INTERSECTION
WITH LEFT TURN BAYS

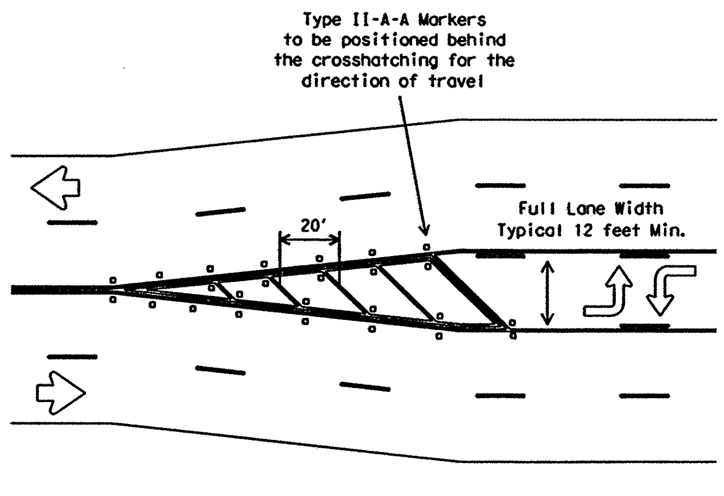

TYPICAL TRANSITION FOR TWLTL
AND DIVIDED HIGHWAY

STANDARD PLANS

Texas Department of Transportation

Traffic Operations Division

PAVEMENT MARKINGS FOR TWO-WAY LEFT TURN LANES DIVIDED HIGHWAYS AND RURAL LEFT TURN BAYS

PM(4)-03

©TxDOT April 1998 | DN: BAS | CK: GRB | DW: FDN | CK: CAL | NEG NO.:

REVISIONS	STATE DISTRICT	FEDERAL REGION	FEDERAL AID PROJECT			SHEET
5-00 8-00 3-03	22	6	NH-2002 (79)			862A
	COUNTY		CONTROL	SECTION	JOB	HIGHWAY
	WEBB		0018	05	062, ETC	IH 35

DISCLAIMER
The use of this standard is governed by the "Texas Engineering Practice Act". No warranty of any kind is made by TxDOT for any purpose whatsoever. TxDOT assumes no responsibility for the conversion of this standard to other formats or for incorrect results or damages resulting from its use.

DISPLAYED																ACC:
1	2	3	4	5	6	7	8	9	10	11	12	13	14	15	16	
17	18	19	20	21	22	23	24	25	26	27	28	29	30	31	32	
33	34	35	36	37	38	39	40	41	42	43	44	45	46	47	48	
49	50	51	52	53	54	55	56	57	58	59	60	61	62	63		

b34mp179.dgn-01 HOUFILE023 \hcivil\cf0130\ 4/19/2003

DISCLAIMER:
The use of this standard is governed by the "Texas Engineering Practice Act". No warranty of any kind is made by TxDOT for any purpose whatsoever. TxDOT assumes no responsibility for the conversion of this standard to other formats or for incorrect results or damages resulting from its use.

DISPLAYED
1 2 3 4 5 6 7 8 9 10 11 12 13 14 15 16 17 18 19 20 21 22 23 24 25 26 27 28 29 30 31 32
33 34 35 36 37 38 39 40 41 42 43 44 45 46 47 48
49 50 51 52 53 54 55 56 57 58 59 60 61 62 63

ACC:

STANDARD PLANS
Texas Department of Transportation
Traffic Operations Division

STANDARD PAVEMENT MARKINGS (WORDS)

PM(5)-01

© TxDOT March 2001	DN: -	CK: - GRB	DW: - FDN	CK: - CAL
REVISIONS	STATE DISTRICT	FEDERAL REGION	FEDERAL AID PROJECT	SHEET
	22	6	NH-2002 (79)	863

COUNTY	CONTROL	SECTION	JOB	HIGHWAY
WEBB	0018	05	062, ETC	IH 35

b34mo153.dgn-01 HOUFILE023 \hcivil\cf0130\4/18/2003

DISCLAIMER
The use of this standard is governed by the "Texas Engineering Practice Act". No warranty of any kind is made by TxDOT for any purpose whatsoever. TxDOT assumes no responsibility for the conversion of this standard to other formats or for incorrect results or damages resulting from its use.

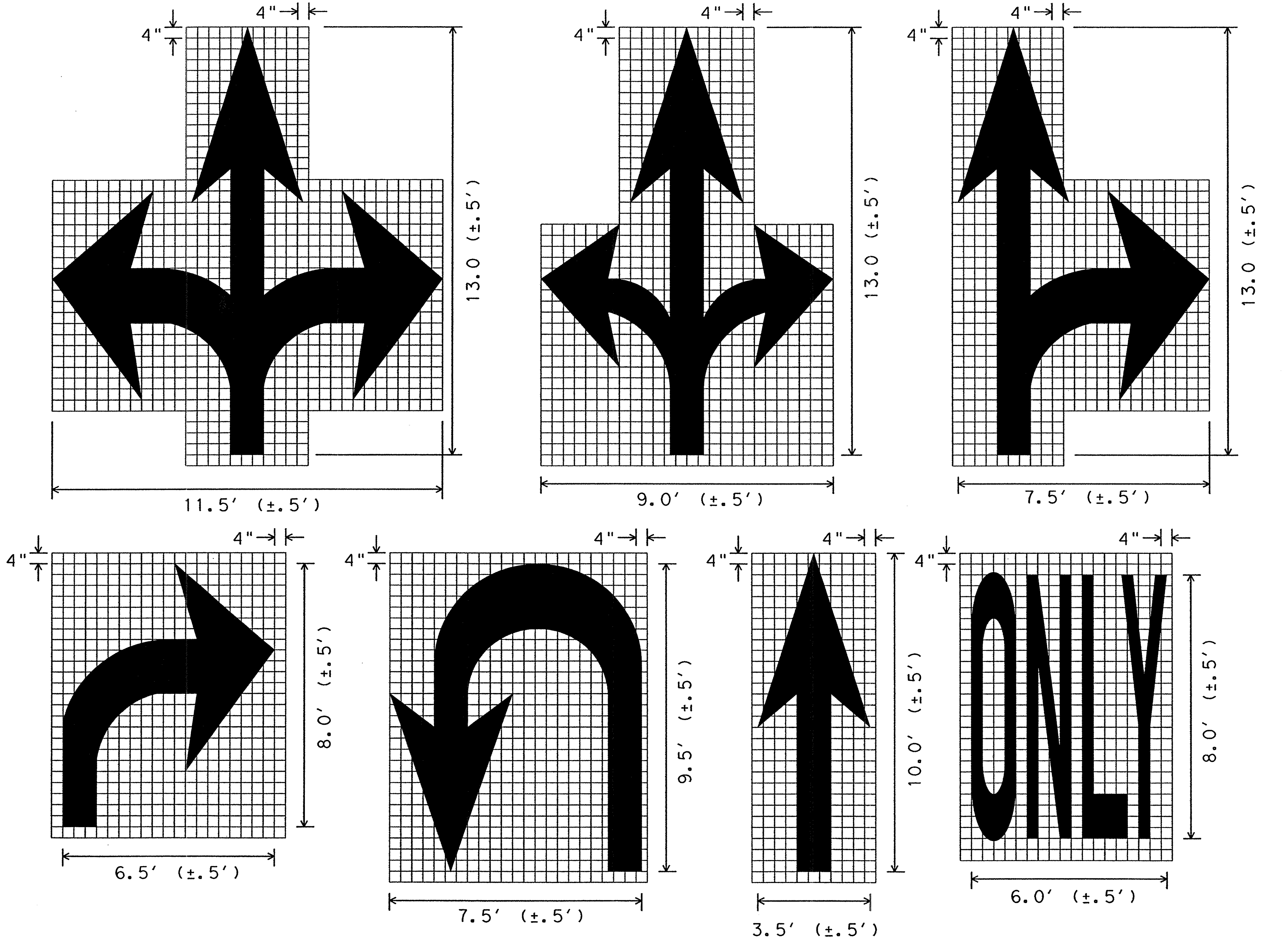

GENERAL NOTES;

1. Minimum 8 foot white markings should be used, unless otherwise noted. If message consists of more than one word, it should be placed with first word nearest the driver.
2. These details are standard size for normal installation; sizes may be reduced approximately one-third for low speed urban conditions; larger sizes may be needed for freeways, above average speed conditions or other critical locations.
3. The longitudinal space between markings should be at least four times the height of the markings, on low speed roads, but should not exceed ten times the height under any condition.
4. Markings considered appropriate for use when warranted include the following:
   A. Regulatory
      STOP
      RIGHT (LEFT) TURN ONLY
      25 MPH
      SYMBOL ARROWS
   B. Warning
      STOP AHEAD
      SIGNAL AHEAD
      SCHOOL
      SCHOOL X-ING
      PED X-ING
      R X R (see RCPM standard)
   C. Guide
      US XXX
      ROUTE XXX
      STATE XXX
      Other words or symbols may be necessary under certain conditions
5. Uncontrolled use of pavement markings can result in driver confusion. Word and symbol markings should be no more than three lines.
6. The word "STOP" shall not be used on the pavement unless accompanied by a Stop line and Stop sign. The word "STOP" shall not be placed on the pavement in advance to a stop line, unless every vehicle is required to stop at all times.
7. Pavement markings should generally be no more than one lane in width, with School messages being the exception. For details of School and School crossing pavement markings, refer to Part VII of the "Texas Manual on Uniform Traffic Control Devices".
8. Spacing between letters should be approximately 4 inches. The width of letters may vary depending on the width of the travel lanes.
9. Lane-Use arrow markings may be used to convey either guidance or mandatory messages. Arrows used to convey a mandatory movement must be accompanied by standard signs and the pavement marking word "ONLY".
10. Pavement markings are to be located as specified elsewhere in the plans.

SPACING BETWEEN LINES OF PAVEMENT MARKINGS	
MPH	SPACING
≤45	MINIMUM 4 TIMES THE LETTER HEIGHT
>45	MINIMUM - 4 TIMES THE LETTER HEIGHT MAXIMUM - 10 TIMES THE LETTER HEIGHT

STANDARD PLANS
Texas Department of Transportation
Traffic Operations Division

STANDARD PAVEMENT MARKINGS (ARROWS)

PM(6)-01

©TxDOT March 2001	DN: -		CK: GRB	DW: FDN	CK: CAL
REVISIONS	STATE DISTRICT	FEDERAL REGION	FEDERAL AID PROJECT		SHEET
	22	6	NH-2002 (79)		864
	COUNTY		CONTROL	SECTION	JOB	HIGHWAY
	WEBB		0018	05	062, ETC	IH 35

b34mp154.dgn-01 HOUFILE023 \hcivil\cf0130\4/18/2003

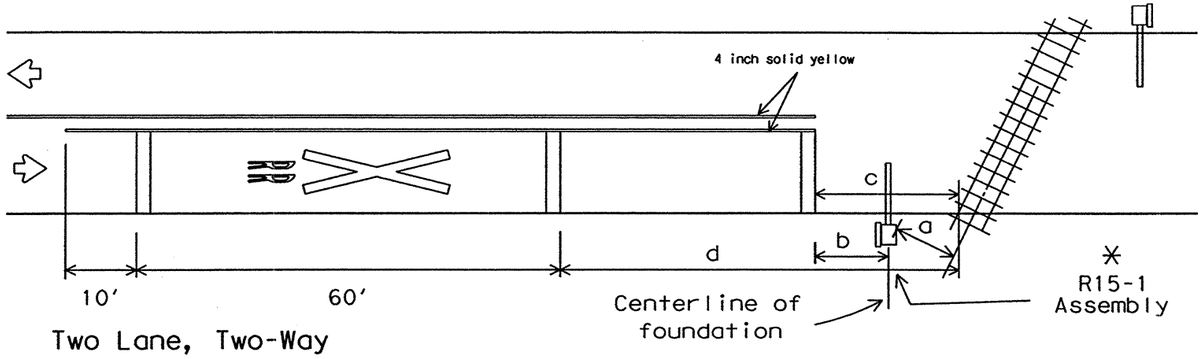

Two Lane, Two-Way

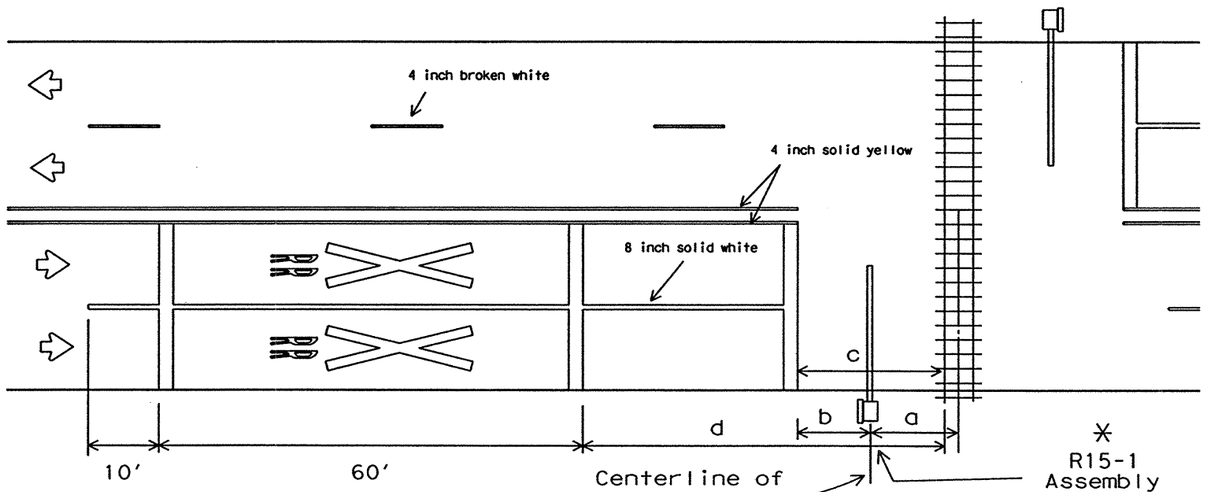

Undivided Multilane Roadway

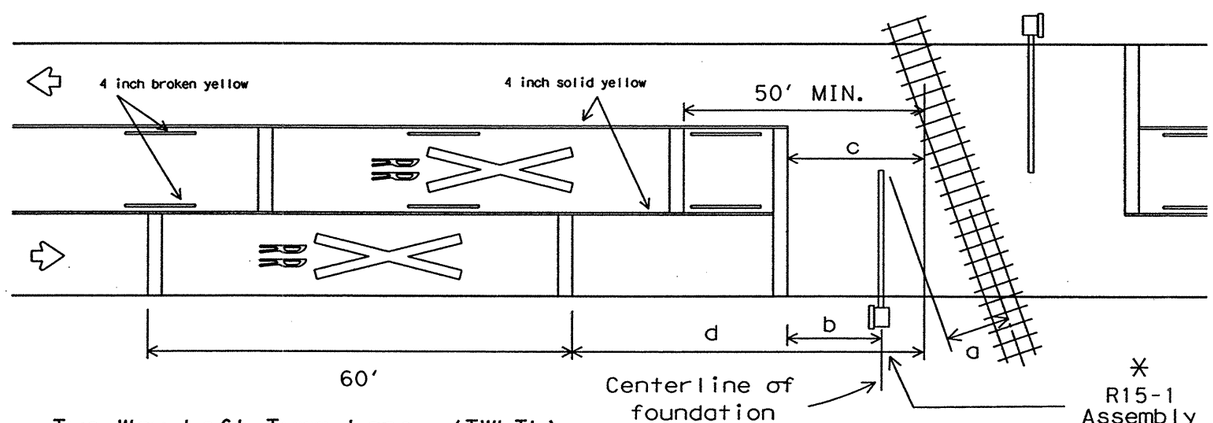

Two-Way Left Turn Lane (TWLTL)

a =

12 feet minimum, 15 feet usual, if active warning devices are present. Distance "a" should be measured from the centerline of ✳ R15-1 assembly to the centerline of nearest track.

b =

Stop lines should be approximately 8 feet in advance of active warning devices (Type A, E or F). Stop line should be approximately 15 feet from near rail if only passive devices (R15-1, plus R15-2 when applicable) are present.

c =

15 feet desirable minimum. R15-1 should be placed between stop line and rails with adequate distance provided for "a".

✳ d =

Approach Speed(mph)	Desirable Placement (feet)
20	145
25	220
30	295
35	370
40	445
45	520
50	595
55	670
60	745
65	820
70	900

✳ Local conditions may require alternate placement locations.

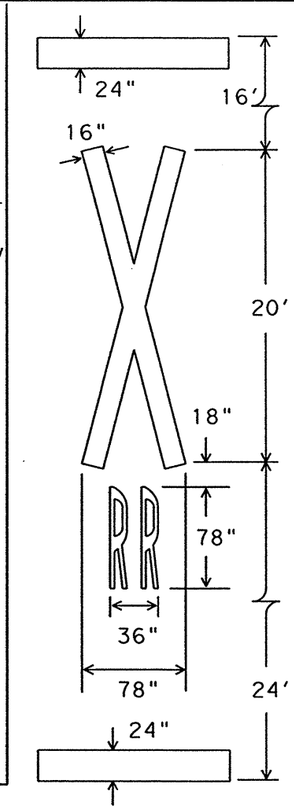

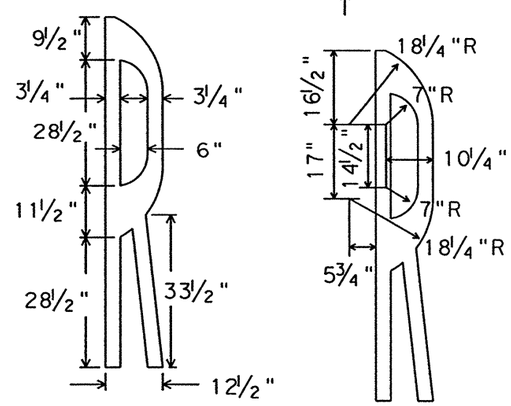

ESTIMATED QUANTITIES

(for Contractor Information ONLY)

24 INCH WHITE TRANSVERSE MARKINGS AND STOP LINES

No. of Approach Lanes (Include TWLTL)	LANE WIDTH (FT) 11	12	13	14
1	33	36	39	42
2	66	72	78	84
3	99	108	117	126
4	132	144	156	168

4 INCH SOLID YELLOW NO PASSING LINE = "d" - "c" + 70

For: Two Lane, Two-Way, Single Lane Approach per Direction

8 INCH SOLID WHITE LANE LINE = "d" - "a" + 70

For: Two-Way or One-Way Traffic, 2 or More Approach Lanes in Same Direction (Do NOT Include TWLTL)

GENERAL NOTES

1. The pavement markings on an approach to a railroad grade crossing shall consist of:
   a. The RR Xing symbol,
   b. Three transverse 24" lines, and
   c. Lane lines: a solid no passing line for two-way traffic approaches, or solid lane lines for multilane approaches.
2. For bidding purposes, the RR Xing symbol will be measured and paid for as for each lane in place. The transverse markings and lane lines will be measured and paid for by the lineal foot.
3. Centerlines shall be yellow, other markings shall be white.
4. Approach lanes less than 8 foot width shall NOT have markings.
5. Markings should NOT be placed where less than 110 feet of approach roadway is available for placement.
6. RR Xing symbols should be placed approximately in the center of the approach lane.
7. All transverse markings, including stop lines, shall be placed at right angles to the centerline and across all approach lanes.
8. Existing non-standard markings shall be removed to the fullest extent possible so as not to leave a discernable marking, by any method approved by the engineer. OVERPAINTING WILL NOT BE ALLOWED.
9. Additional markings and placement details may be found in the TMUTCD, Appendix H.
10. The Engineer may require additional longitudinal markings if the distance between the stop lines is greater than 80 feet. Markings are not required across or between the rails unless specified elsewhere in the plans.

✳ R15-1 Assembly

May consist of one or more of the following:

R15-1	Crossbuck Sign
R15-2	Multiple Track Sign
Type A	Mast Flashers
Type E	Cantilevers
Type F	Gates

STANDARD PLANS
TEXAS DEPARTMENT OF TRANSPORTATION
Traffic Operations Division

RAILROAD CROSSING PAVEMENT MARKING TYPICAL DETAILS

RCPM-96

©TxDOT August 1990

DN: LR/MT	CK: -	DW: DN	CK: -	MEG NO.:

REVISIONS
12-90 2-96
5-91
4-92
8-95

STATE DISTRICT	FEDERAL REGION	FEDERAL AID PROJECT	SHEET
22	6	NH-2002 (79)	865

COUNTY	CONTROL	SECTION	JOB	HIGHWAY
WEBB	0018	05	062, ETC	IH 35

DISCLAIMER
The use of this standard is governed by the "Texas Engineering Practice Act". No warranty of any kind is made by TxDOT for any purpose whatsoever. TxDOT assumes no responsibility for the conversion of this standard to other formats or for incorrect results or damages resulting from its use.

DISPLAYED

	1	2	3	4	5	6	7	8	9	10	11	12	13	14	15	16
1																
2																
3																
4																
5																
6																
7																
8																
9																

ACC:

b34md159.dgn-01 HOUFILE023 \hcivil\cf0130\4/18/2003

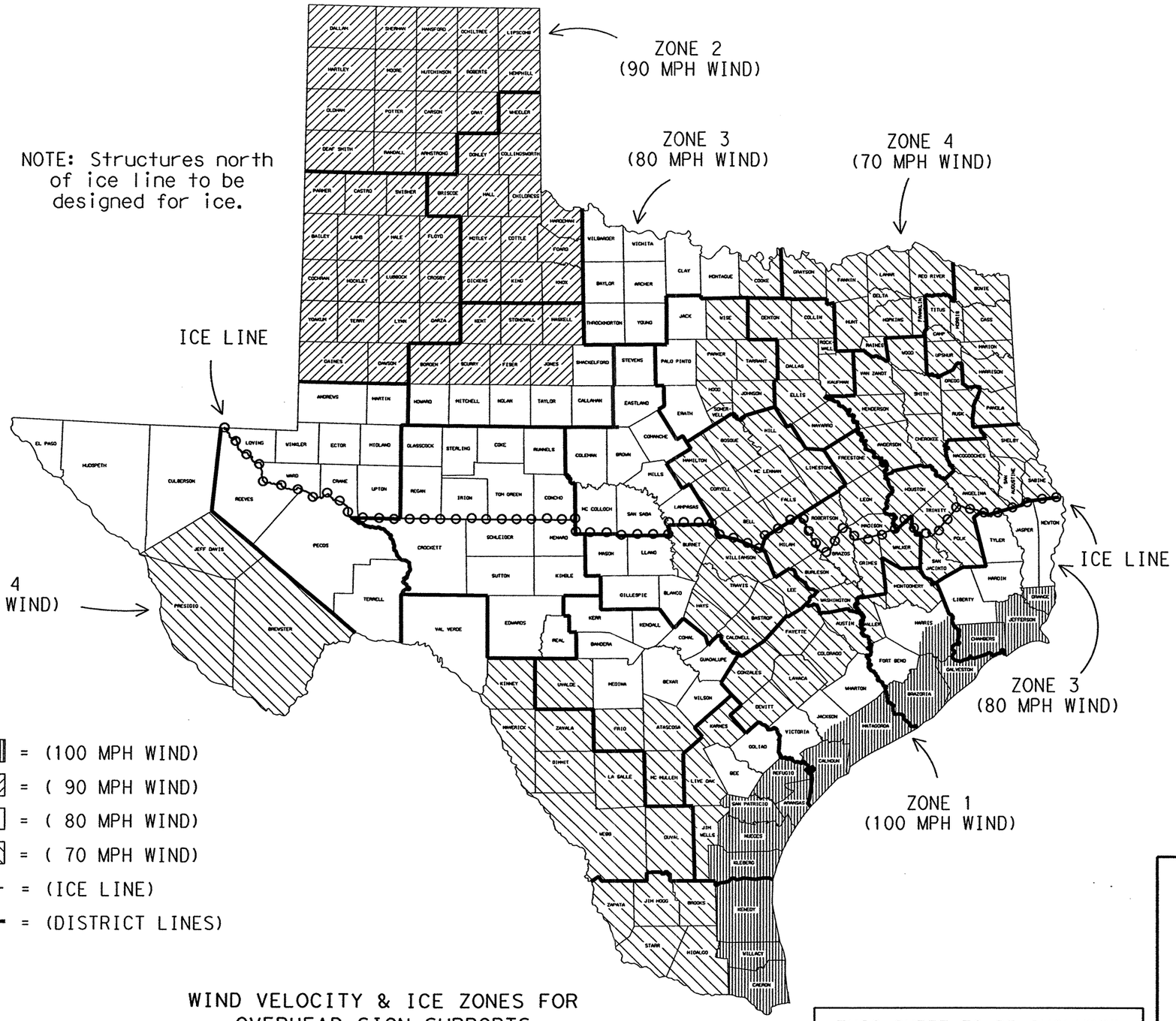

NOTE: Structures north of ice line to be designed for ice.

LEGEND

ZONE 1 - = (100 MPH WIND)

ZONE 2 - = (90 MPH WIND)

ZONE 3 - = (80 MPH WIND)

ZONE 4 - = (70 MPH WIND)

= (ICE LINE)

= (DISTRICT LINES)

FOR HARRIS CO. ONLY
Zone line is just North of US 90, around on the North, West and South sides of IH 610 and down the West side of SH 288.

FOR JACKSON CO. ONLY
Zone line is just North of SH 616.

WIND VELOCITY & ICE ZONES FOR OVERHEAD SIGN SUPPORTS

Based on 50 Year Mean Recurrence Interval of Fastest Mile Wind Velocity at 33 feet height.

THIS SHEET TO BE INCLUDED IN ALL P.S.&E.'s WITH OVERHEAD SIGN SUPPORTS

STANDARD PLANS
TEXAS DEPARTMENT OF TRANSPORTATION
Traffic Operations Division

WIND VELOCITY AND ICE ZONES

WV & IZ-96

©TxDOT April 1996

REVISIONS	DN: -	CK: -	DW: - DN	CK: - MT	REG NO.:
	STATE DISTRICT	FEDERAL REGION	FEDERAL AID PROJECT		SHEET
	22	6	NH-2002 (79)		866
	COUNTY		CONTROL	SECTION	JOB	HIGHWAY
	WEBB		0018	05	062, ETC	IH 35

b34mp168.dgn-01 HOUFILE023 \hcivil\cf0130\4/18/2003

DISCLAIMER
The use of this standard is governed by the "Texas Engineering Practice Act". No warranty of any kind is made by TxDOT for any purpose whatsoever. TxDOT assumes no responsibility for the conversion of this standard to other formats or for incorrect results or damages resulting from its use.

LEVELS DISPLAYED
1 2 4 5 6 7 8 9 10 11 12 13 14 15 16
17 18 19 20 21 22 23 24 25 26 27 28 29 30 31 32
33 34 35 36 37 38 39 40 41 42 43 44 45 46 47 48
49 50 51 52 53 54 55 56 57 59 60 61 62 63

DATE:
ACC: d58hplc/usr/d580504
FILE:

DN: LR
CK: CW
DW: DN
CK: MT

SITE DESCRIPTION

Project Limits: Limits (IH 35) : from 0.25 mi north of the Loop 20/IH 35 Interchange to 0.50 mi north of Uniroyal Rd

Limits (IH 35 @ Uniroyal Road) : from 0.05 mi south of Uniroyal Rd to 0.05 mi north of Uniroyal Rd

Project Description: For the construction of IH 35 mainlanes, frontage roads, entrance and exit ramps and three bridge structures consisting of the construction of pavement, grading, drainage, signing, pavement marking, illumination, traffic management and structures.

Total Project Area: Approx 167 Acres

Total Area to be Disturbed: 72 Acres

Weighted Runoff Coefficient (after Construction): 0.712

Existing Condition of Soil & Vegetative Cover and Percent of Existing Vegetative Cover: The surface soils on the project alignment is located within the Copita-Verick Soil Series, where the predominant surface soils consist the Copita fine sandy loams and the Verick fine sandy loam.

The Copita and Verick soils are well drained and moderately permeable. Typically, the top 1 meter (3 feet) of the surface soils are calcareous fine sandy loam and calcareous sandy clay loams. The soils contain 25 to 65 percent fines passing No. 200 sieve, and are non-plastic or with low plasticity.

Water and wind erosion potential of the surface soils is described as moderate if the ground is without vegetation cover.

The soils are estimated to be 70% covered with varies grasses in fair condition.

Name of Receiving Waters: All crossings are received by Manadas Creek. This is a tributary of the Rio Grande River.

STORM WATER POLLUTION PREVENTION PLAN
CONTRACTOR CERTIFICATION

" I certify under penalty of law that I understand the terms and conditions of the general National Pollutant Discharge Elimination System (NPDES) permit that authorizes the storm water discharges associated with industrial activity from the construction site identified as part of this certification."

NAME _____ DATE _____

TITLE _____

CONTRACTING FIRM _____

EROSION AND SEDIMENT CONTROLS

SOIL STABILIZATION PRACTICES:

- ✓ Temporary Seeding
- ✓ Permanent Planting, Sodding, or Seeding
- ✓ Mulching
- ----- Soil Retention Blanket
- ----- Buffer Zones
- ✓ Preservation of Natural Resources

Other: Disturbed areas on which construction activity has ceased (temporarily and permanently) ~~shall be~~ stabilized within 14 days unless activities are scheduled to resume within 21 days.

STRUCTURAL PRACTICES:

- ✓ Silt Fences
- ----- Hay Bales
- ✓ Rock Berms
- ----- Diversion, Interceptor, or Perimeter Dikes
- ----- Diversion, Interceptor, or Perimeter Swales
- ----- Diversion Dike and Swale Combinations
- ----- Pipe Slope Drains
- ----- Paved Flumes
- ✓ Rock Bedding at Construction Exit
- ----- Timber Matting at Construction Exit
- ----- Channel Liners
- ----- Sediment Traps
- ----- Sediment Basins
- ----- Storm Inlet Sediment Trap
- ----- Stone Outlet Structures
- ✓ Curbs and Gutters
- ✓ Storm Sewers
- ----- Velocity Control Devices
- ✓ Other: Vegetated Filter Strips

Narrative: Sequence of Construction (Storm Water Management) Activities:
The Order of activities ~~will be~~ as follows:

Phase I

1. Install rock berms, install sediment control fences along ROW and at existing drainage structures, install storm inlet sediment traps and begin grading operations, install Vegetated Filter Strips, they can be seeded early in the project or sodded late in the project.
2. Remove & stockpile topsoil, seed & stabilize stockpiled material to minimize erosion.
3. Make required utility adjustments and install new utilities, construct inlets and Storm Sewers. Install Silt Fences around all inlets across ditches and at the Outfall, as soon as they are functional.
4. Construct Embankment, Lime Subgrade, Cement Stabilized Base and Pavement Sections, maintaining Silt Fences at all inlet locations, across ditches and at the outfall.
5. Stabilize the disturbed area after completion of each phase.
6. Repeat steps 1 thru 5 for each additional phase of work.
7. When all construction activity is complete and the site is stabilized and approved by the Project Engineer, remove all unnecessary Temporary Structural Controls and reseed any areas distrubed by their removal.

* Notes: -Contractor should try to use Existing berm as a natural barrier during Phase I. Removal of the Existing berm may require additional measures as directed by The Engineer.
-Vegetated Filter Strips need ~~to be~~ functional (70% min cover) when project is sold.

Storm Water Management:

Storm water drainage ~~will be~~ provided by grass "V" ditches, drop inlets and a storm drainage system. Soil stabilization and various stuctural practices will be applied to all project area runoff entering the outfall drainage system.

OTHER EROSION AND SEDIMENT CONTROLS:

Maintenance: All erosion and sediment controls will be maintained in good working order. If a repair is necessary, it will be done at the earliest date possible, but no later than 2 calendar days days after the surrounding exposed ground has dried sufficiently to prevent further damage from heavy equipment. The areas adjacent to creeks and cross drains shall have priority.

Inspection: All inspection will be performed by a TxDOT inspector every week on erosion and sediment controls as well as after every half inch or more of rain (as recorded on a non-freezing rain gauge to be located at the project site). An inspection and maintenance report will be made for each inspection. Based on the inspection results, the erosion and sediment controls ~~shall be~~ repaired and/or revised if any of the controls prove to be ineffective based on the inspection report.

Waste Materials: All waste materials ~~will be~~ collected and stored in a securely lidded metal dumpster. The dumpster will meet all state and local city solid waste management regulations. All trash and construction debris from the site ~~will be~~ deposited in the dumpster. The dumpster will be emptied as necessary or as required by local regulation, and the trash will be hauled to a local state approved landfill. No construction waste material will be buried on site.

Hazardous Waste (including Spill Report): At a minimum, any products in the following categories are considered to be hazardous: paints, acids for cleaning masonary surfaces, cleaning solvents, asphalt products, chemical additives for soil stabilization, or concrete curing compounds and additives. In the event of a spill which may be hazardous, the spill coordinator should be contacted immediately.

Sanitary Waste: All sanitary waste ~~will be~~ collected from the portable units as necessary or as required by local regulation by a licensed sanitary waste management contractor.

Offsite Vehicle Tracking:

- ✓ Haul roads dampened for dust control
- ✓ Loaded haul trucks to be covered with tarpaulin
- ✓ Excess dirt on road removed daily
- ✓ Stabilized construction entrance

Other:

Remarks: Rock berm locations ~~shall be~~ as shown on the plans or as directed by the Engineer. Disposal areas, stockpiles, and haul roads ~~shall be~~ constructed in a manner that will minimize and control the amount of sediment that may enter receiving waters. Disposal areas ~~shall not be~~ located in any wetland waterbody or streambed.
Construction staging areas and vehicle maintenance areas ~~shall be~~ constructed by the contractor in a manner to minimize the runoff of pollutants. All waterways ~~shall be~~ cleared as soon as possible of temporary embankment, matting, debris, or other obstructions placed during construction operations that are not a part of the finished work.

ENVIRONMENTAL ISSUES, PERMITS, AND COMMITMENTS

General Project Information			
DATE OF LAST ENTRY:	November 6, 2002	DISTRICT:	Laredo (22)
COUNTY:	Webb	CSJ:	0018-05-062
HIGHWAY:	IH 35	LIMITS:	From: 0.25 mi. North of the Loop 20/IH 35 Interchange TO: 0.5 mi. North of the Uniroyal Interch.
LETTING DATE:	August 2003		
DESCRIPTION:	Widen from 4 to 6 Mainlanes		

Water Resources Issues

US Army Corps of Engineers Nationwide Permit (NWP) 14 has been designated for work in the seven ephemeral stream crossings that are Jurisdictional Waters of the US. The stockpile sites, containing all excavated materials, ~~shall be~~ located in an upland area so as to prevent any sediment of pollution from entering any creeks should a rainfall event occur. The appropriate TxDOT Storm Water Pollution Prevention Practices, including Temporary Vegetation, Mattes, Rock Berms, Silt Fences, Vegetative Filter strips and/or Grass-lined Ditches ~~will be~~ used to meet the requirements for the TCEQ-401 Water Quality Conditions for the Best Management Practices for the construction and post-construction periods, and for the storm runoff.

It is the Contractors sole responsibility to acquire environmental clearance, and any necessary permits, for any and all Project Specific Locations (PSLs) (i.e. borrow pits, staging yards, equipment yards, batch plants, etc.) that the Contractor may use in association with the project, and that are not on TxDOT right-of-way. Environmental factors that would need ~~to be~~ cleared by the Contractor include, but not limited to: Biological Resources Issues, Noise Issues, Hazardous Materials Issues, Archeological and Historical Issues, etc. It is the Contractors responsibility to have such clearance completed, and any necessary permits in hand, before work at those sites could commence. It is the Contractors responsibility to have any, and all, documents, files, reports, permits, etc. available at the job site for inspection by TxDOT, or any other government agency. PSLs within TxDOT right-of-way will be cleared by TxDOT, but environmental clearance and any associated permits will only be valid for the duration of that specific project.

Biological Resources Issues

None

Noise Issues

None

Hazardous Materials Issues

None

Archeological Issues

None

NOTES:

1. FOR ALL ITEMS SPECIFIED ON THIS SHEET, THE CONTRACTOR ~~SHALL BE~~ RESPONSIBLE FOR REFERENCING THE TEXAS STANDARD SPECIFICATIONS FOR CONSTRUCTION OF HIGHWAYS, STREETS, AND BRIDGES 1993 FOR SPECIFICATIONS, DIMENSIONS, VOLUMES AND MEASUREMENTS THAT HAVE BEEN MODIFIED OR NOT SHOWN.
2. FOR SOIL STABILIZATION ITEMS SPECIFIED ON THIS SHEET, REFER TO "SW3P NOTES FOR ADDITIONAL INTSTRUCTIONS.
3. REFER TO TEMPORARY EROSION, SEDIMENT AND WATER POLLUTION CONTROL MEASURES EC(1)-93 AND EC (3)-93 FOR DETAILS RELATING TO INSTALLATION AND MAINTENANCE OF TEMPORARY EROSION CONTROL.
4. TIMETABLE FOR TEMPORARY EROSION CONTROL ~~SHALL BE~~ AS SHOWN ON THE PLAN SHEETS OR AS DIRECTED BY THE ENGINEER.

LEGEND

- COMPOSTED TOPSOIL
- SEEDING/SODDING
- WINDROWED TOPSOIL
- SCF TEMP SEDIMENT CONT FENCE

STATE OF TEXAS
RUDY L. GOMEZ
PE 58664
REGISTERED PROFESSIONAL ENGINEER

THE SEAL APPEARING ON THIS DOCUMENT WAS AUTHORIZED BY RUDY L. GOMEZ PE 58664, ON APRIL 18, 2003

KBR
Engineered by KBR Technical Services, Inc

©2003 Texas Department of Transportation

IH 35
LOOP 20 TO UNIROYAL ROAD
GENERAL STORM WATER POLLUTION PREVENTION PLAN
(SW3P)
SHEET 1 OF 1

FED RD DIV NO	FEDERAL AID PROJECT NO		SHEET NO
6	NH-2002 (79)		867
STATE	STATE DIST		COUNTY
TEXAS	LAREDO		WEBB
CONT	SECT	JOB	HIGHWAY NO
0018	05	062, ETC	IH 35

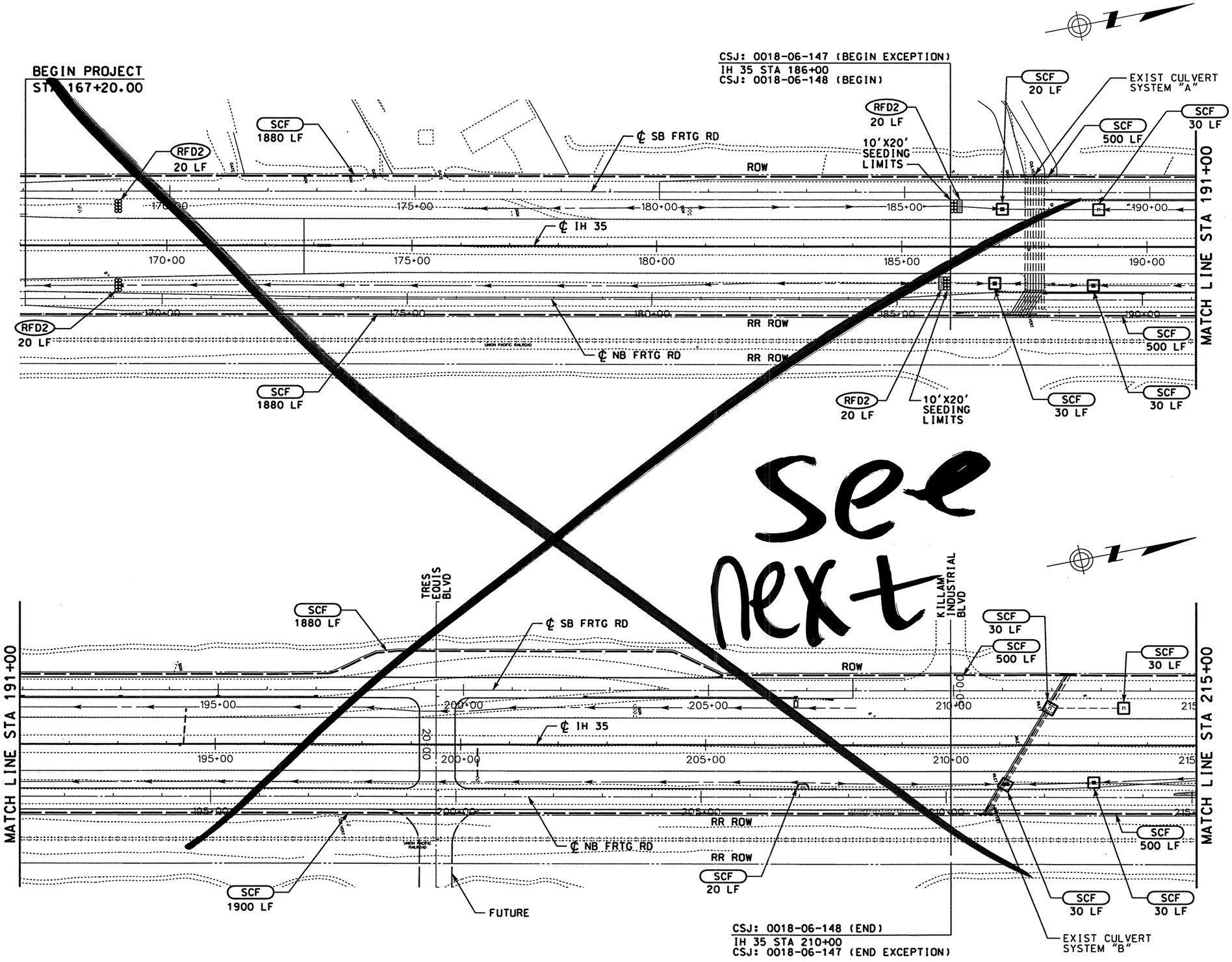

LEGEND:

- SEDIMENT CONTROL FENCE LINE
- ST-DI — DROP INLET SEDIMENT TRAP
- SCF — SEDIMENT CONTROL FENCE
- RFD2 — ROCK FILTER DAM (TYPE 2)
- CONSTRUCTION EXIT (TYPE 1)
- DIRECTION OF DITCH FLOW

NOTE:

1. SEDIMENT CONTROL FENCE AT ROW.

0 100 200
SCALE: 1" = 200'

STATE OF TEXAS
RUDY L. GOMEZ
58664
REGISTERED PROFESSIONAL ENGINEER

THE SEAL APPEARING ON THIS DOCUMENT WAS AUTHORIZED BY RUDY L. GOMEZ PE 58664, ON APRIL 18, 2003

KBR
Engineered by KBR Technical Services, Inc

©2003 Texas Department of Transportation

IH 35
LOOP 20 TO UNIROYAL ROAD
SW3P
STA 167+00 TO
STA 215+00

SHEET 1 OF 6

FED RD DIV NO	FEDERAL AID PROJECT NO		SHEET NO
6	NH-2002 (79)		868
STATE	STATE DIST		COUNTY
TEXAS	LAREDO		WEBB
CONT	SECT	JOB	HIGHWAY NO
0018	05	062, ETC	IH 35

REF FILE(S): j01lop01.drn, drn LV ON = 8.9.28

REF FILE(S): j01lop01.bdr, bdr LV ON = 17.46.57-58.60-63
j01lop01.alg, alg LV ON = 1-6.35-39
j01lop01.bck, bck LV ON = 2.9-10.14.17.21.25.28
j01lop02.eop, eop LV ON = 1-5.7-11.13-17.19-63
milointr.row, row LV ON = 1-22.24-63

b14lop01.dgn-13 HOUFILE023 \hcivil\cf0130\ 4/30/2003

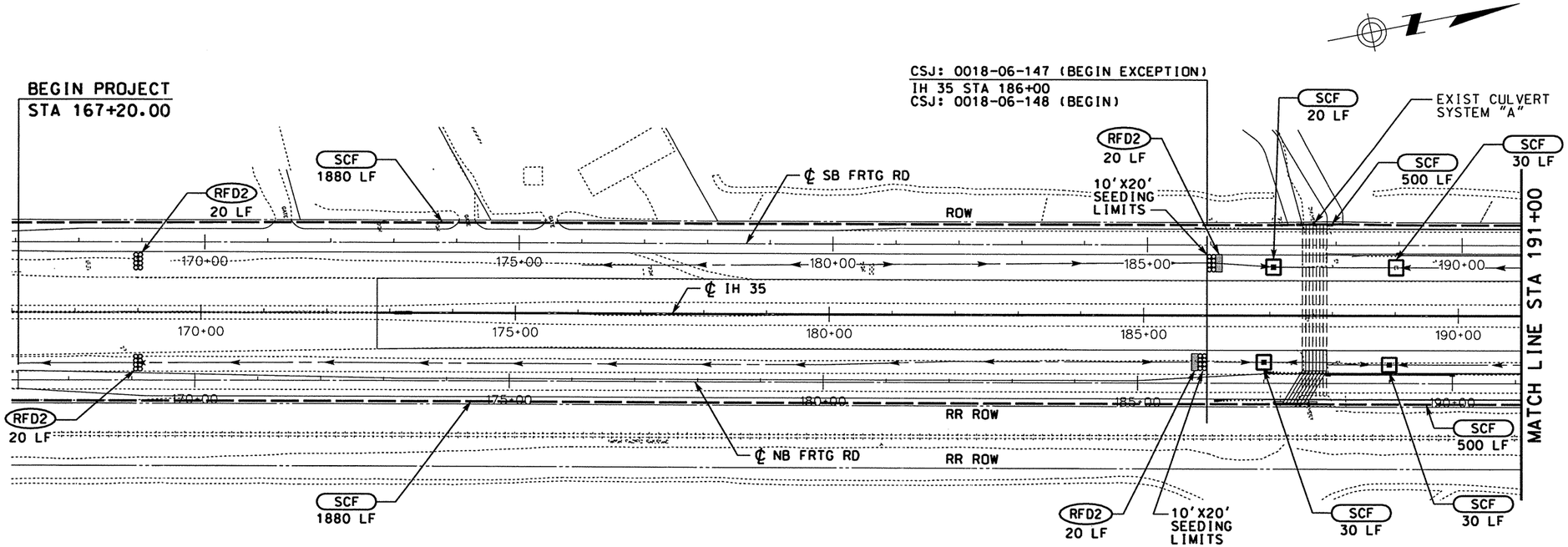

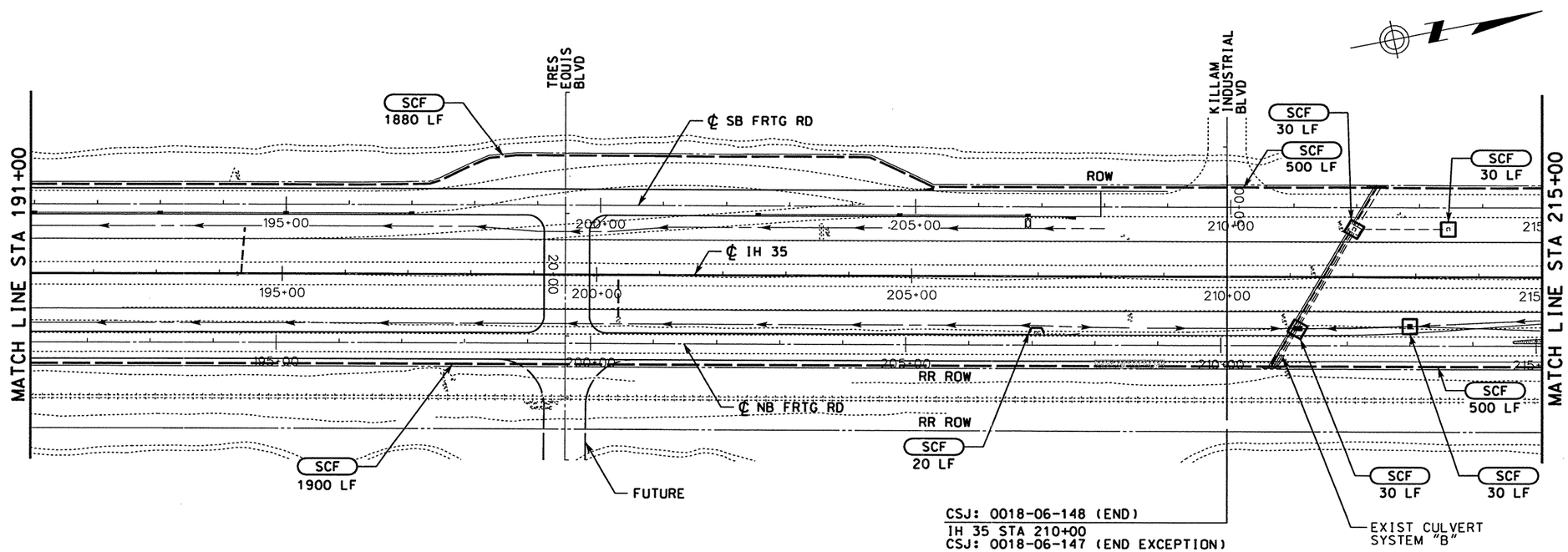

LEGEND:

- SEDIMENT CONTROL FENCE LINE
- ST-DI — DROP INLET SEDIMENT TRAP
- SCF — SEDIMENT CONTROL FENCE
- RFD2 — ROCK FILTER DAM (TYPE 2)
- CONSTRUCTION EXIT (TYPE 1)
- DIRECTION OF DITCH FLOW

NOTE:

1. SEDIMENT CONTROL FENCE AT ROW.

DATE	BY	REV	REVISION
02/17/04	AA	1	MAINLANE SHLDR WIDEN REV EDGE OF PAVEMENT AND PAVEMENT LIMITS

0 100 200
SCALE: 1" = 200'

STATE OF TEXAS — A.A. ABUGATTAS — 34940 — REGISTERED PROFESSIONAL ENGINEER

THE SEAL APPEARING ON THIS DOCUMENT WAS AUTHORIZED BY A.A. ABUGATTAS PE 34940, ON MARCH 05, 2004

KBR
Engineered by KBR Technical Services, Inc

©2003 Texas Department of Transportation

IH 35
LOOP 20 TO UNIROYAL ROAD
SW3P
STA 167+00 TO
STA 215+00

SHEET 1 OF 6

FED RD DIV NO	FEDERAL AID PROJECT NO		SHEET NO
6	NH-2002 (79)		868
STATE	STATE DIST		COUNTY
TEXAS	LAREDO		WEBB
CONT	SECT	JOB	HIGHWAY NO
0018	05	062, ETC	IH 35

REF FILE(S): j011op01.bdr, bdr LV ON = 17.46,57-58,60-63
REF FILE(S): j011op01.alg, alg LV ON = 1-6,35-39
j011op01.bck, bck LV ON = 2,9-10,14,17,21,25,28
j011op02.eop, eop LV ON = 1-5,7-11,13-17,19-63
milointr.row, row LV ON = 1-22,24-63
REF FILE(S): j011op01.drn, drn LV ON = 8,9,28

b14op01.dgn-13 HOUFILE023 \hcivil\c0130\ 3/4/2004

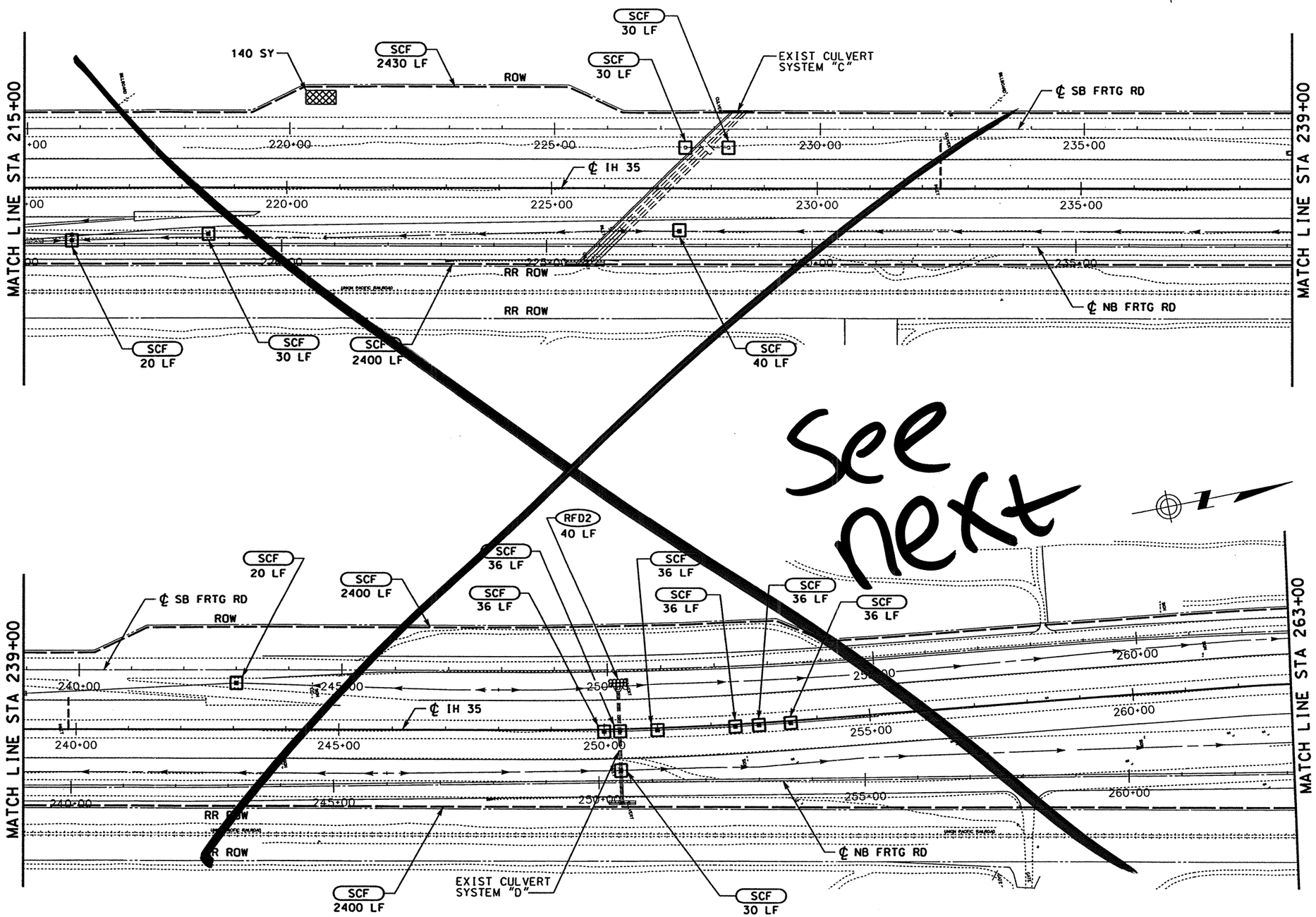

LEGEND:

- SEDIMENT CONTROL FENCE LINE
- ST-DI — DROP INLET SEDIMENT TRAP
- SCF — SEDIMENT CONTROL FENCE
- RFD2 — ROCK FILTER DAM (TYPE 2)
- CONSTRUCTION EXIT (TYPE 1)
- DIRECTION OF DITCH FLOW

NOTE:

1. SEDIMENT CONTROL FENCE AT ROW.

0 100 200
SCALE: 1" = 200'

STATE OF TEXAS
RUDY L. GOMEZ
58664
REGISTERED PROFESSIONAL ENGINEER

THE SEAL APPEARING ON THIS DOCUMENT WAS AUTHORIZED BY RUDY L. GOMEZ PE 58664, ON APRIL 18, 2003

KBR
Engineered by KBR Technical Services, Inc

©2003 Texas Department of Transportation

IH 35
LOOP 20 TO UNIROYAL ROAD
SW3P
STA 215+00 TO
STA 263+00

SHEET 2 OF 6

FED RD DIV NO	FEDERAL AID PROJECT NO		SHEET NO
6	NH-2002 (79)		869
STATE	STATE DIST		COUNTY
TEXAS	LAREDO		WEBB
CONT	SECT	JOB	HIGHWAY NO
0018	05	062, ETC	IH 35

REF FILE(S): j01lop01.drn, drn LV ON = 8.9.28
REF FILE(S): j01lop01.bdr, bdr LV ON = 17.46.57.58.60-62
j01lop01.alg, alg LV ON = 1-6.35-39
j01lop01.bck, bck LV ON = 2.9.10.14.17.21.25.28
j01lop02.eop, eop LV ON = 1-11.13-17.19-63
miloint.row, row LV ON = 1-22.24-63
b14lop02.dgn-11 HOUFILE023 \hcivil\cf0130\ 4/18/2003

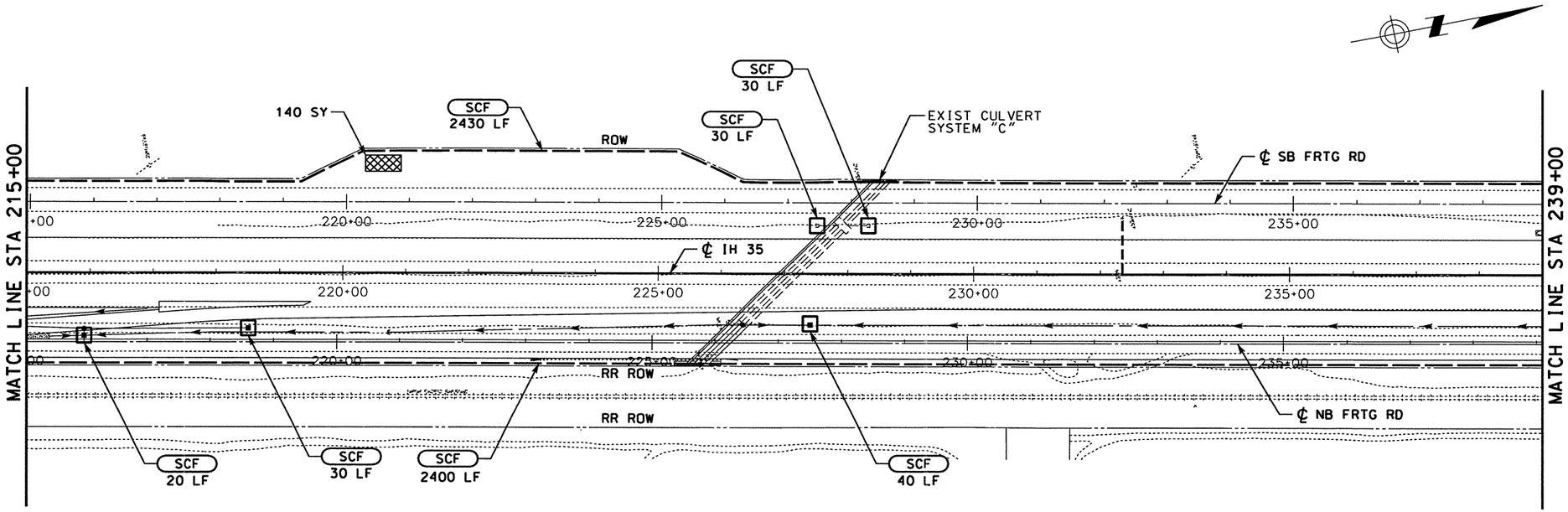

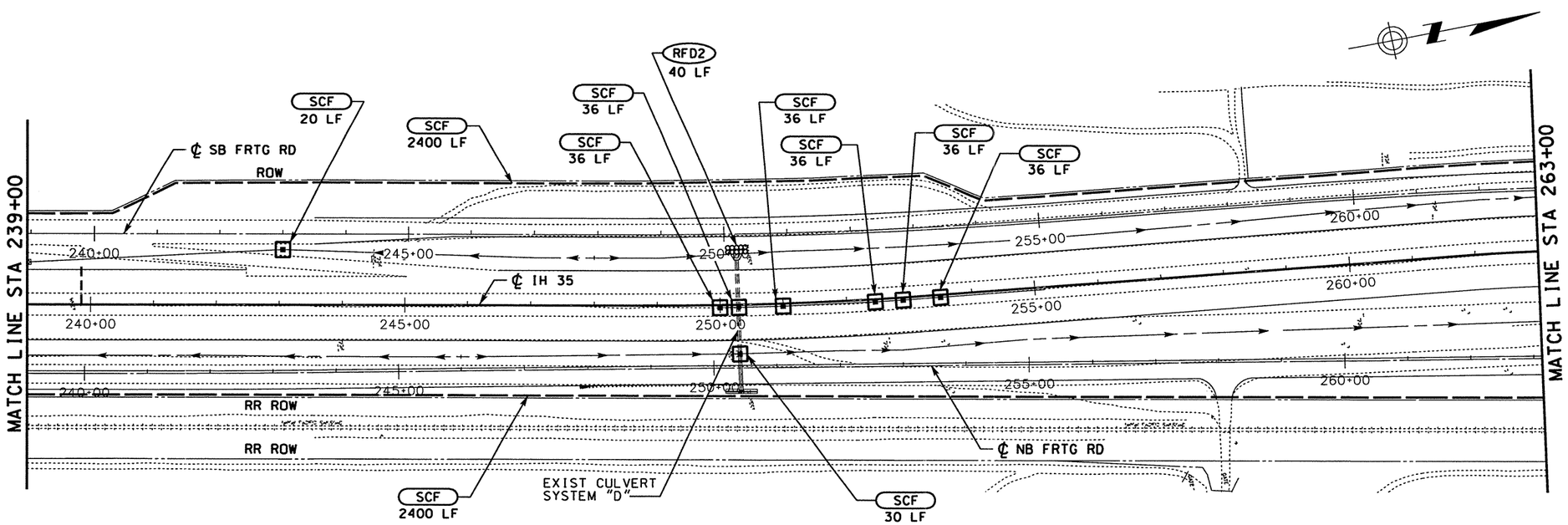

LEGEND:

- SEDIMENT CONTROL FENCE LINE
- ST-DI — DROP INLET SEDIMENT TRAP
- SCF — SEDIMENT CONTROL FENCE
- RFD2 — ROCK FILTER DAM (TYPE 2)
- CONSTRUCTION EXIT (TYPE 1)
- DIRECTION OF DITCH FLOW

NOTE:

1. SEDIMENT CONTROL FENCE AT ROW.

DATE	BY	REV	REVISION
02/17/04	AA	1	MAINLANE SHLDR WIDEN REV EDGE OF PAVEMENT AND PAVEMENT LIMITS

0 100 200
SCALE: 1" = 200'

STATE OF TEXAS A.A. ABUGATTAS 34940 REGISTERED PROFESSIONAL ENGINEER

THE SEAL APPEARING ON THIS DOCUMENT WAS AUTHORIZED BY A.A. ABUGATTAS PE 34940, ON MARCH 05, 2004

KBR
Engineered by KBR Technical Services, Inc

©2003 Texas Department of Transportation

IH 35
LOOP 20 TO UNIROYAL ROAD
SW3P
STA 215+00 TO
STA 263+00

SHEET 2 OF 6

FED RD DIV NO	FEDERAL AID PROJECT NO		SHEET NO
6	NH-2002 (79)		869
STATE	STATE DIST		COUNTY
TEXAS	LAREDO		WEBB
CONT	SECT	JOB	HIGHWAY NO
0018	05	062, ETC	IH 35

REF FILE(S): j01lop01.drn, drn LV ON = 8.9.28
REF FILE(S): j01lop01.bdr, bdr LV ON = 17.46.57.58.60-62
j01lop01.alg, alg LV ON = 1-6.35-39
j01lop01.bck, bck LV ON = 2.9.10.14.17.21.25.28
j01lop02.eop, eop LV ON = 1-11.13-17.19-63
miloint.row, row LV ON = 1-22.24-63
b14lop02.dgn-11 HOUFILE023 \hcivil\cf0130\ 3/4/2004

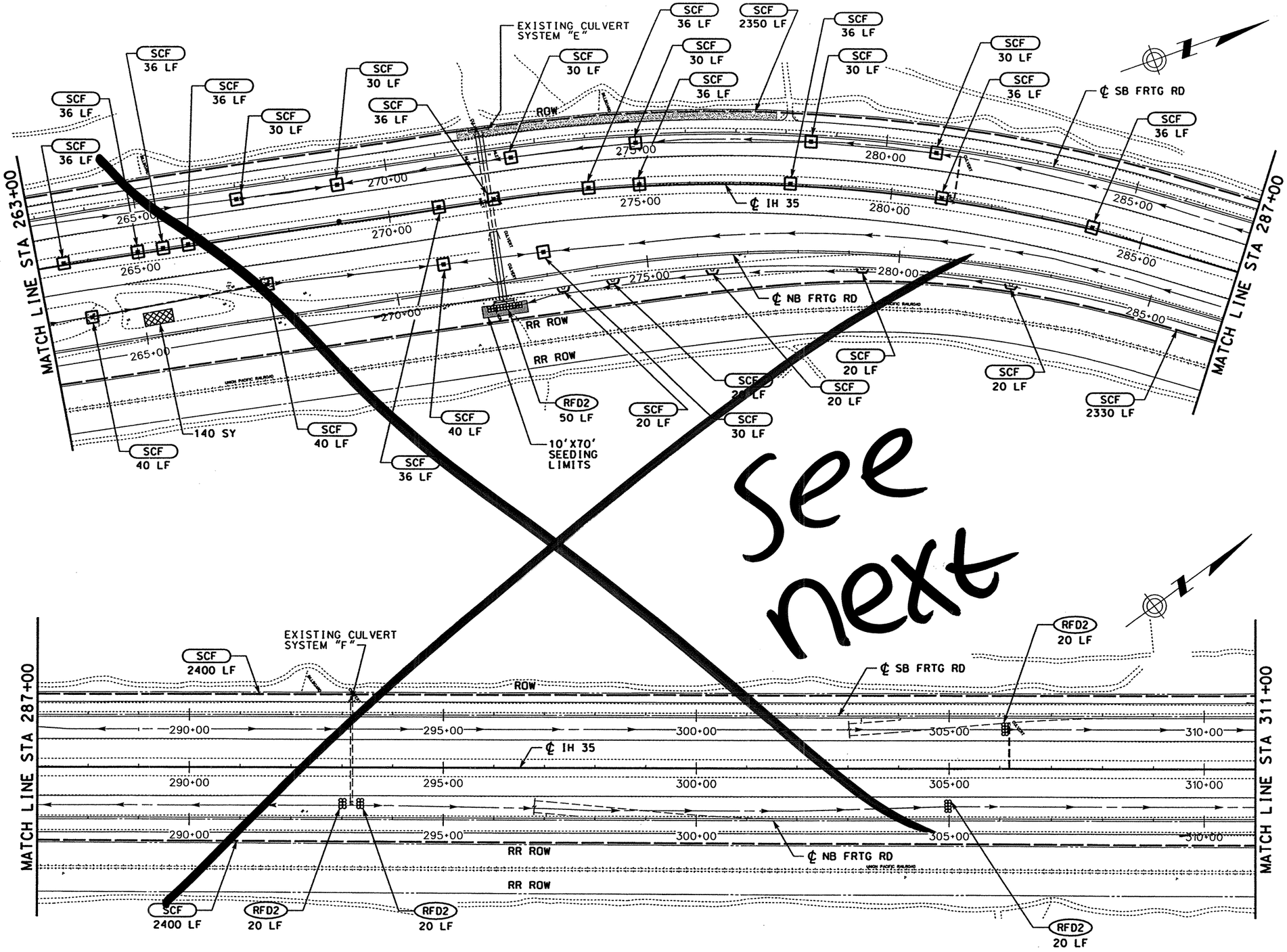

LEGEND:

- SEDIMENT CONTROL FENCE LINE
- ST-DI — DROP INLET SEDIMENT TRAP
- SCF — SEDIMENT CONTROL FENCE
- RFD2 — ROCK FILTER DAM (TYPE 2)
- CONSTRUCTION EXIT (TYPE 1)
- DIRECTION OF DITCH FLOW

NOTE:

1. SEDIMENT CONTROL FENCE AT ROW.

0 100 200
SCALE: 1" = 200'

STATE OF TEXAS — RUDY L. GOMEZ — 58664 — REGISTERED PROFESSIONAL ENGINEER

THE SEAL APPEARING ON THIS DOCUMENT WAS AUTHORIZED BY RUDY L. GOMEZ PE 58664, ON APRIL 18, 2003

KBR
Engineered by KBR Technical Services, Inc

©2003 Texas Department of Transportation

IH 35
LOOP 20 TO UNIROYAL ROAD
SW3P
STA 263+00 TO
STA 311+00

SHEET 3 OF 6

FED RD DIV NO	FEDERAL AID PROJECT NO		SHEET NO
6	NH-2002 (79)		370
STATE	STATE DIST		COUNTY
TEXAS	LAREDO		WEBB
CONT	SECT	JOB	HIGHWAY NO
0018	05	062, ETC	IH 35

REF FILE(S): j011op01.drn, drn LV ON = 8.9.28
REF FILE(S): j011op01.bdr, bdr LV ON = 17.46.57.58.60-62
j011op01.alg, alg LV ON = 1-6.35-39
j011op01.bck, bck LV ON = 2.9.10.14.17.21.25.28
j011op02.eop, eop LV ON = 1-11.13-17.19-63
miloint.row, row LV ON = 1-22.24-63
b14op03.dgn-10 HOUFILE023 \hcivil\c(0130\ 4/18/2003

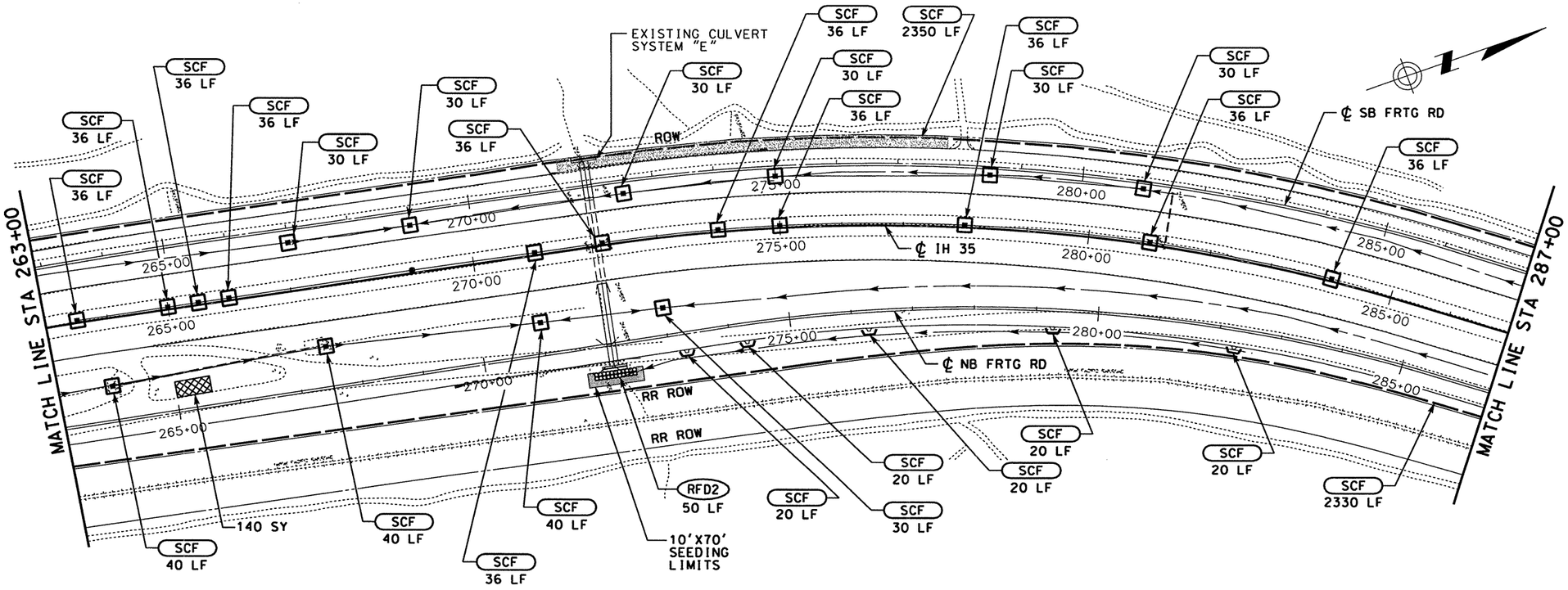

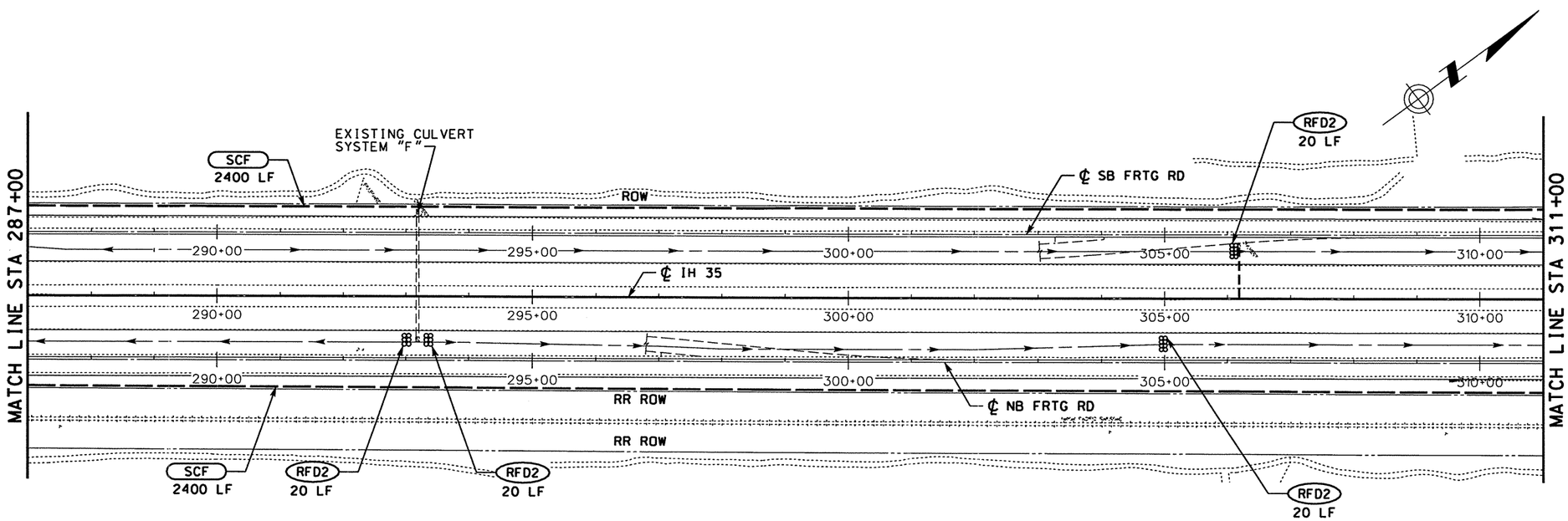

LEGEND:

- SEDIMENT CONTROL FENCE LINE
- ST-DI — DROP INLET SEDIMENT TRAP
- SCF — SEDIMENT CONTROL FENCE
- RFD2 — ROCK FILTER DAM (TYPE 2)
- CONSTRUCTION EXIT (TYPE 1)
- DIRECTION OF DITCH FLOW

NOTE:

1. SEDIMENT CONTROL FENCE AT ROW.

DATE	BY	REV	REVISION
02/17/04	AA	1	MAINLANE SHLDR WIDEN REV EDGE OF PAVEMENT AND PAVEMENT LIMITS

0 100 200
SCALE: 1" = 200'

STATE OF TEXAS — A.A. ABUGATTAS — 34940 — REGISTERED PROFESSIONAL ENGINEER

THE SEAL APPEARING ON THIS DOCUMENT WAS AUTHORIZED BY A.A. ABUGATTAS PE 34940, ON MARCH 05, 2004

KBR
Engineered by KBR Technical Services, Inc

©2003 Texas Department of Transportation

IH 35
LOOP 20 TO UNIROYAL ROAD
SW3P
STA 263+00 TO
STA 311+00

SHEET 3 OF 6

FED RD DIV NO	FEDERAL AID PROJECT NO	SHEET NO
6	NH-2002 (79)	870
STATE	STATE DIST	COUNTY
TEXAS	LAREDO	WEBB
CONT	SECT / JOB	HIGHWAY NO
0018	05 / 062. ETC	IH 35

REF FILE(S): j01lop01.drn, drn LV ON = 8.9.28
REF FILE(S): j01lop01.bdr, bdr LV ON = 17.46.57.58.60-62
j01lop01.alg, alg LV ON = 1-6.35-39
j01lop01.bck, bck LV ON = 2.9.10.14.17.21.25.28
j01lop02.eop, eop LV ON = 1-11.13-17.19-63
milpint.row, row LV ON = 1-22.24-63

b14lop03.dgn-10 HOUFILE023 \hcivil\cf0130\ 3/4/2004

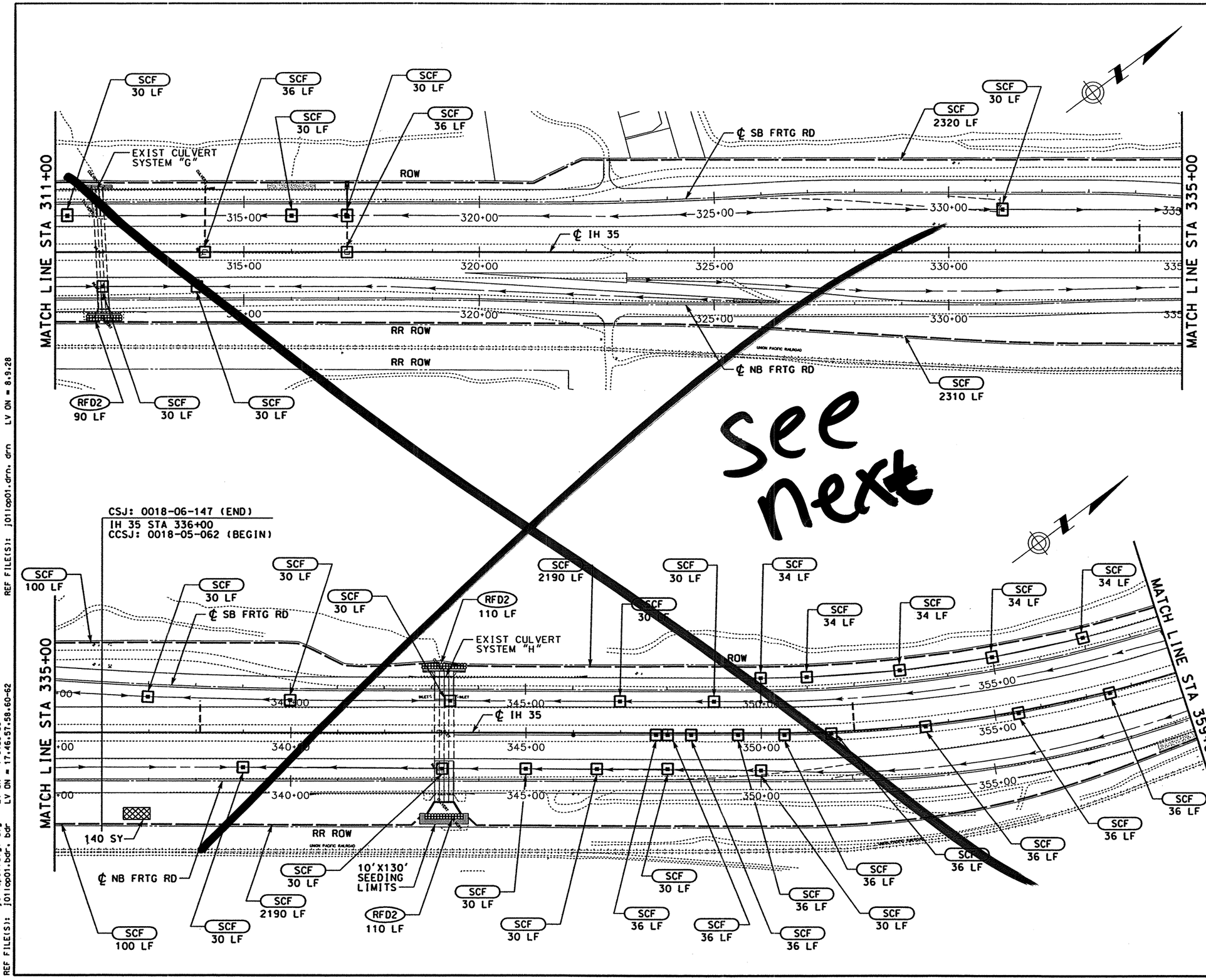

0 100 200
SCALE: 1" = 200'

STATE OF TEXAS
RUDY L. GOMEZ
58664
REGISTERED PROFESSIONAL ENGINEER

THE SEAL APPEARING ON THIS DOCUMENT WAS AUTHORIZED BY RUDY L. GOMEZ PE 58664, ON APRIL 18, 2003

KBR
Engineered by KBR Technical Services, Inc

©2003 Texas Department of Transportation

IH 35
LOOP 20 TO UNIROYAL ROAD
SW3P
STA 311+00 TO
STA 359+00

SHEET 4 OF 6

FED RD DIV NO	FEDERAL AID PROJECT NO		SHEET NO
6	NH-2002 (79)		871
STATE	STATE DIST		COUNTY
TEXAS	LAREDO		WEBB
CONT	SECT	JOB	HIGHWAY NO
0018	05	062, ETC	IH 35

REF FILE(S): j011op01.drn, drn LV ON = 8.9.28
REF FILE(S): mlloint.row, row LV ON = 1-22.24-63
j011op02.eop, eop LV ON = 1-11.13-17.19-63
j011op01.bck, bck LV ON = 2.9.10.14.17.21.25.28
j011op01.alg, alg LV ON = 1-6.35-39
j011op01.bdr, bdr LV ON = 17.46.57.58.60-62

b14lop04.dgn-14 HOUFILE023 \hcivil\cf0130\ 4/18/2003

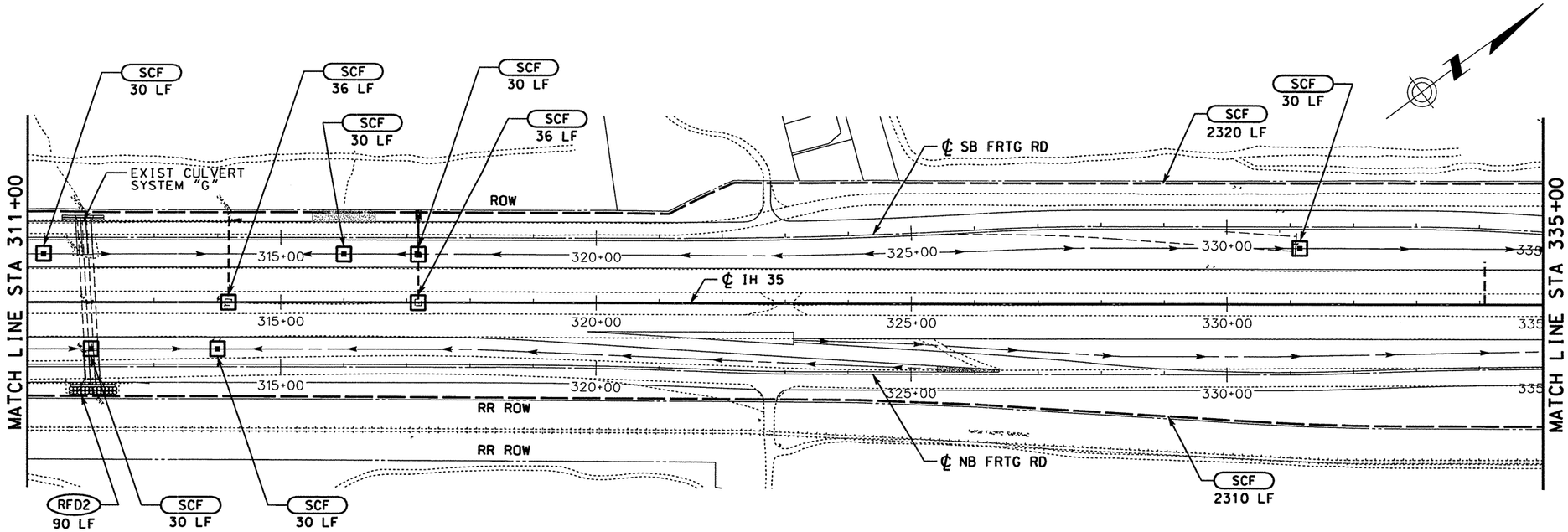

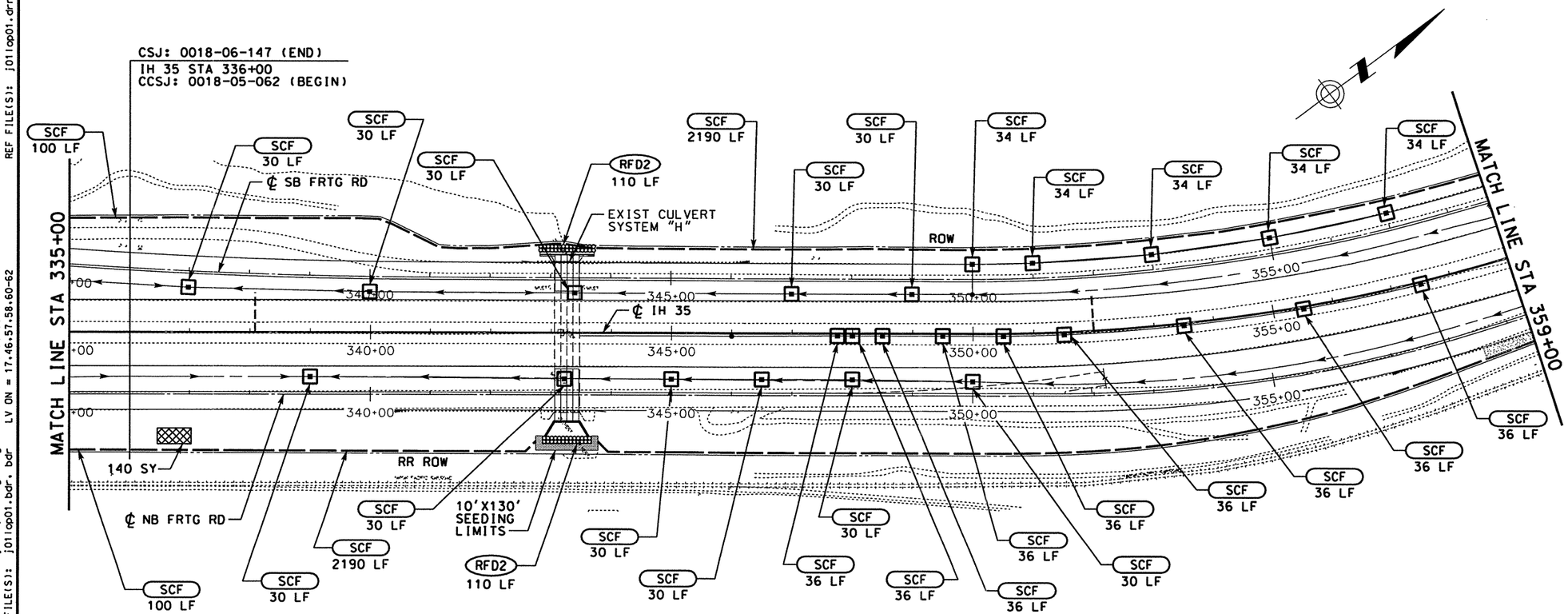

LEGEND:

- SEDIMENT CONTROL FENCE LINE
- ST-DI — DROP INLET SEDIMENT TRAP
- SCF — SEDIMENT CONTROL FENCE
- RFD2 — ROCK FILTER DAM (TYPE 2)
- CONSTRUCTION EXIT (TYPE 1)
- DIRECTION OF DITCH FLOW

NOTE:

1. SEDIMENT CONTROL FENCE AT ROW.

DATE	BY	REV	REVISION
02/17/04	AA	1	MAINLANE SHLDR WIDEN REV EDGE OF PAVEMENT AND PAVEMENT LIMITS

0 100 200
SCALE: 1" = 200'

STATE OF TEXAS A.A. ABUGATTAS 34940 REGISTERED PROFESSIONAL ENGINEER

THE SEAL APPEARING ON THIS DOCUMENT WAS AUTHORIZED BY A.A. ABUGATTAS PE 34940, ON MARCH 05, 2004

KBR
Engineered by KBR Technical Services, Inc

©2003 Texas Department of Transportation

IH 35
LOOP 20 TO UNIROYAL ROAD
SW3P
STA 311+00 TO STA 359+00

SHEET 4 OF 6

FED RD DIV NO	FEDERAL AID PROJECT NO		SHEET NO
6	NH-2002 (79)		871
STATE	STATE DIST		COUNTY
TEXAS	LAREDO		WEBB
CONT	SECT	JOB	HIGHWAY NO
0018	05	062, ETC	IH 35

REF FILE(S): j01lop01.drn, drn LV ON = 8.9.28
REF FILE(S): j01lop01.bdr, bdr LV ON = 17.46.57.58.60-62
j01lop01.alg, alg LV ON = 1-6.35-39
j01lop01.bck, bck LV ON = 2.9.10.14.17.21.25.28
j01lop02.eop, eop LV ON = 1-11.13-17.19-63
miloint.row, row LV ON = 1-22.24-63
b14lop04.dgn-14 HOUFILE023 \hcivil\cf0130\ 3/4/2004

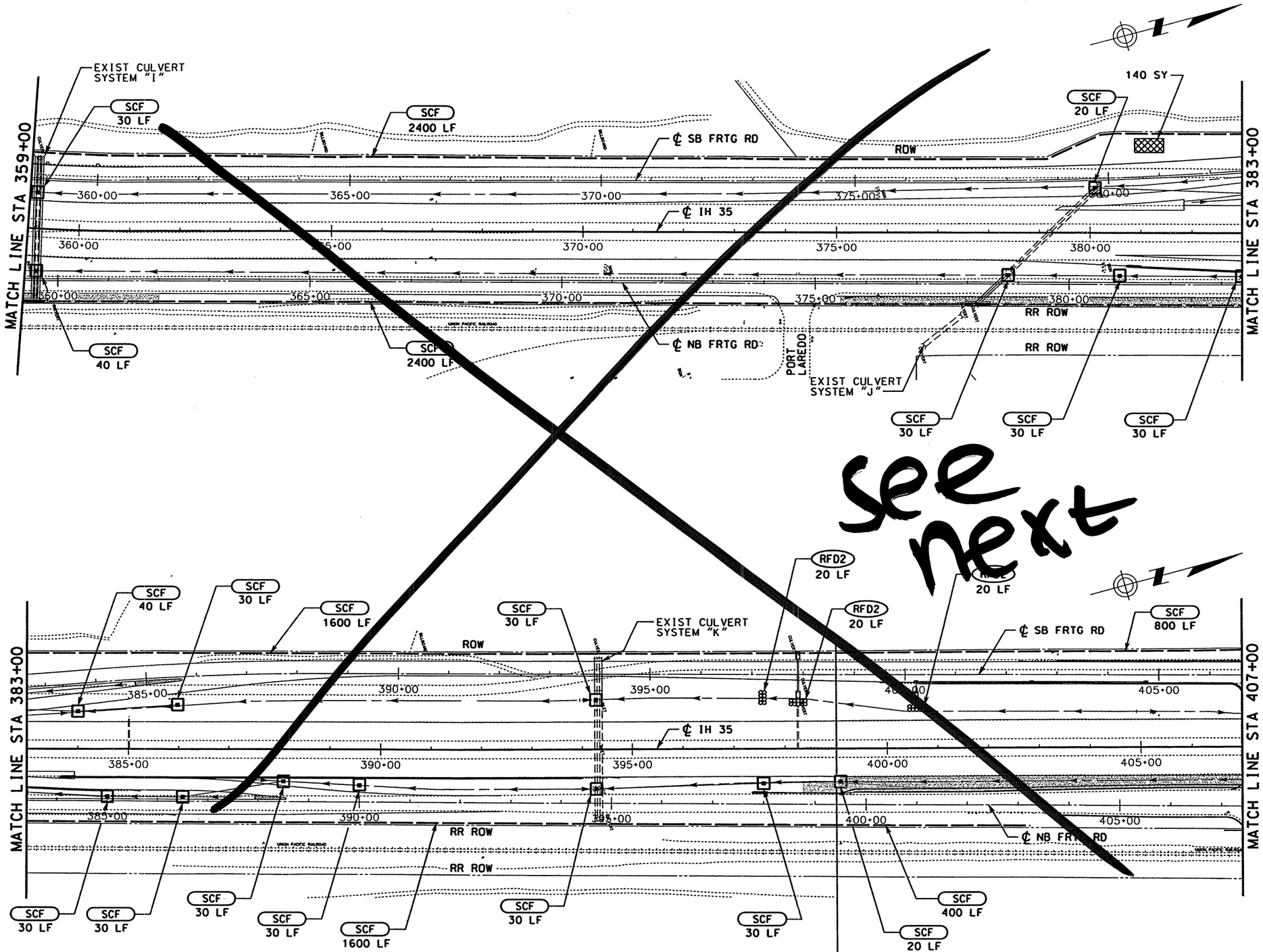

LEGEND:

- SEDIMENT CONTROL FENCE LINE
- ST-DI — DROP INLET SEDIMENT TRAP
- SCF — SEDIMENT CONTROL FENCE
- RFD2 — ROCK FILTER DAM (TYPE 2)
- CONSTRUCTION EXIT (TYPE 1)
- DIRECTION OF DITCH FLOW

NOTE:

1. SEDIMENT CONTROL FENCE AT ROW.

0 100 200
SCALE: 1" = 200'

STATE OF TEXAS
RUDY L. GOMEZ
58664
REGISTERED PROFESSIONAL ENGINEER

THE SEAL APPEARING ON THIS DOCUMENT WAS AUTHORIZED BY RUDY L. GOMEZ PE 58664, ON APRIL 18, 2003

KBR
Engineered by KBR Technical Services, Inc

©2003 Texas Department of Transportation

IH 35
LOOP 20 TO UNIROYAL ROAD
SW3P
STA 359+00 TO
STA 407+00

SHEET 5 OF 6

FED RD DIV NO	FEDERAL AID PROJECT NO		SHEET NO
6	NH-2002 (79)		872
STATE	STATE DIST		COUNTY
TEXAS	LAREDO		WEBB
CONT	SECT	JOB	HIGHWAY NO
0018	05	062, ETC	IH 35

REF FILE(S): j01lop01.drn, drn LV ON = 8.9.28
REF FILE(S): j01lop01.bdr, bdr LV ON = 17.46.57.58.60-62
j01lop01.alg, alg LV ON = 1-6.35-39
j01lop01.bck, bck LV ON = 2.9.10.14.17.21.25.28
j01lop02.eop, eop LV ON = 1-11.13-17.19-63
miloint.row, row LV ON = 1-22.24-63

b14lop05.dgn-12 HOUFILE023 \hcivil\cf0130\ 4/18/2003

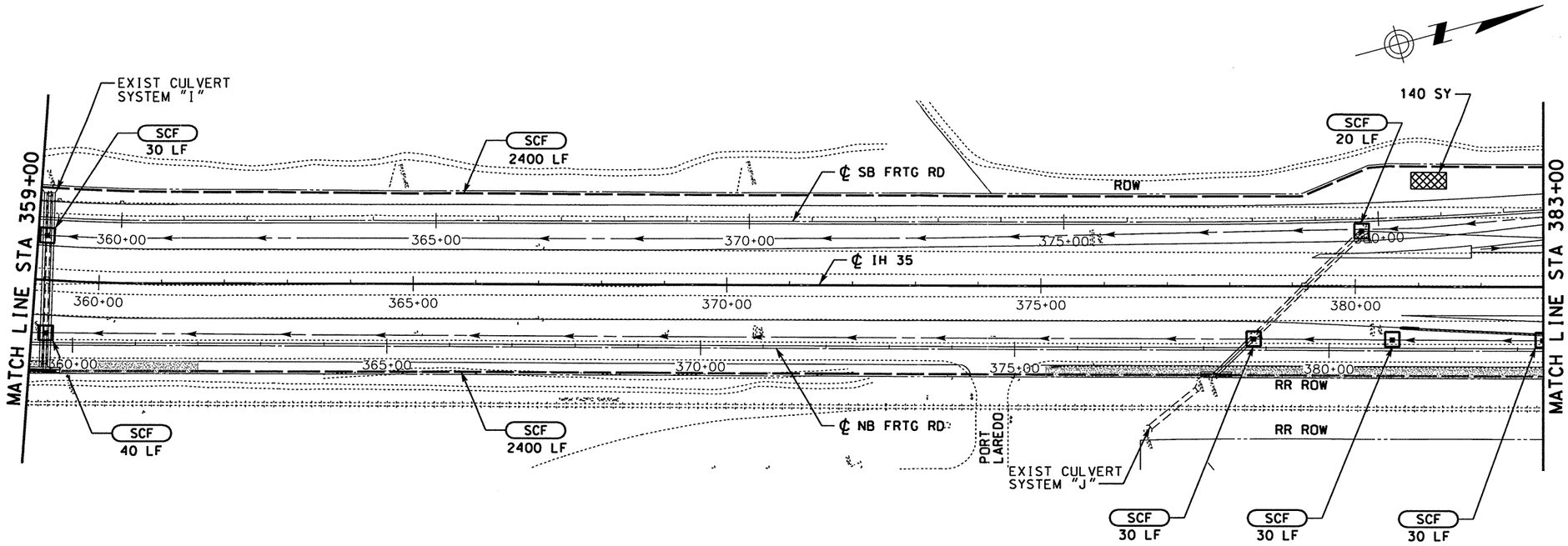

LEGEND:

- SEDIMENT CONTROL FENCE LINE
- (ST-DI) DROP INLET SEDIMENT TRAP
- (SCF) SEDIMENT CONTROL FENCE
- (RFD2) ROCK FILTER DAM (TYPE 2)
- CONSTRUCTION EXIT (TYPE 1)
- DIRECTION OF DITCH FLOW

NOTE:

1. SEDIMENT CONTROL FENCE AT ROW.

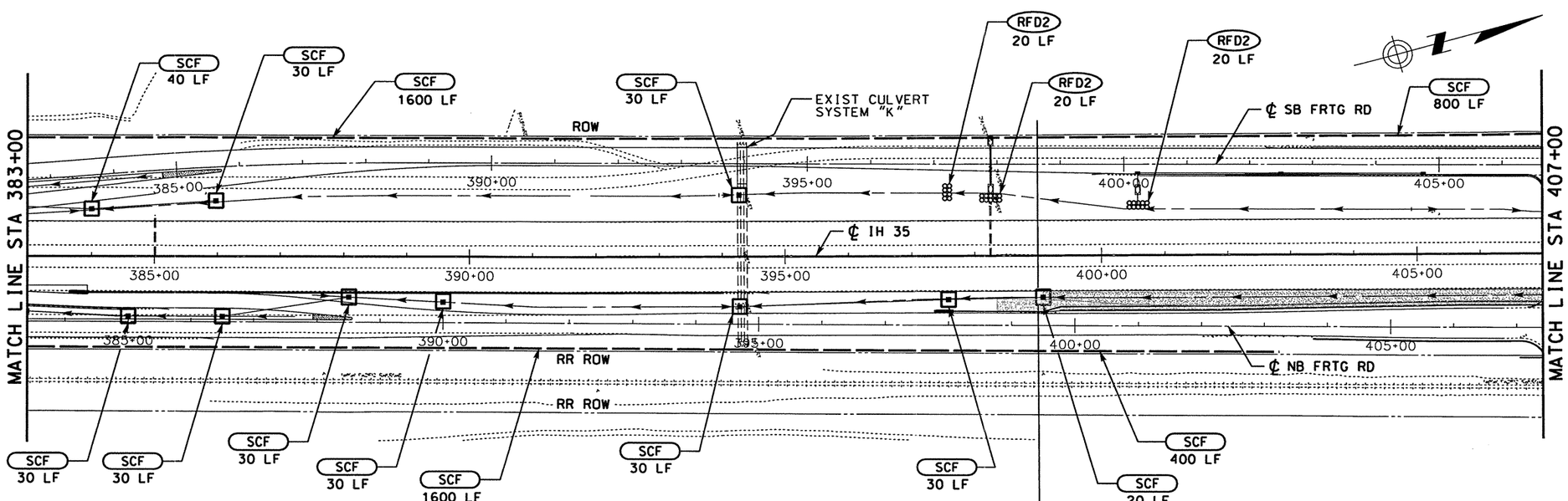

CCSJ: 0018-05-062 (BEGIN EXCEPTION)
IH 35 STA 399+00
CSJ: 0018-05-063 (BEGIN)

DATE	BY	REV	REVISION
02/17/04	AA	1	MAINLANE SHLDR WIDEN REV EDGE OF PAVEMENT AND PAVEMENT LIMITS

0 100 200
SCALE: 1" = 200'

STATE OF TEXAS — A.A. ABUGATTAS — R. 34940 — REGISTERED PROFESSIONAL ENGINEER

THE SEAL APPEARING ON THIS DOCUMENT WAS AUTHORIZED BY A.A. ABUGATTAS PE 34940, ON MARCH 05, 2004

KBR
Engineered by KBR Technical Services, Inc

©2003 Texas Department of Transportation

IH 35
LOOP 20 TO UNIROYAL ROAD
SW3P
STA 359+00 TO
STA 407+00

SHEET 5 OF 6

FED RD DIV NO	FEDERAL AID PROJECT NO	SHEET NO
6	NH-2002 (79)	872
STATE	STATE DIST	COUNTY
TEXAS	LAREDO	WEBB
CONT	SECT / JOB	HIGHWAY NO
0018	05 / 062, ETC	IH 35

REF FILE(S): j01lop01.bdr, bdr LV ON = 17.46.57.58.60-62
j01lop01.alg, alg LV ON = 1-6.35-39
j01lop01.bck, bck LV ON = 2.9.10.14.17.21.25.28
j01lop02.eop, eop LV ON = 1-11.13-17.19-63
miloint.row, row LV ON = 1-22.24-63

REF FILE(S): j01lop01.drn, drn LV ON = 8.9.28

b14lop05.dgn-12 HOUFILE023 \hcivil\cf0130\ 3/4/2004

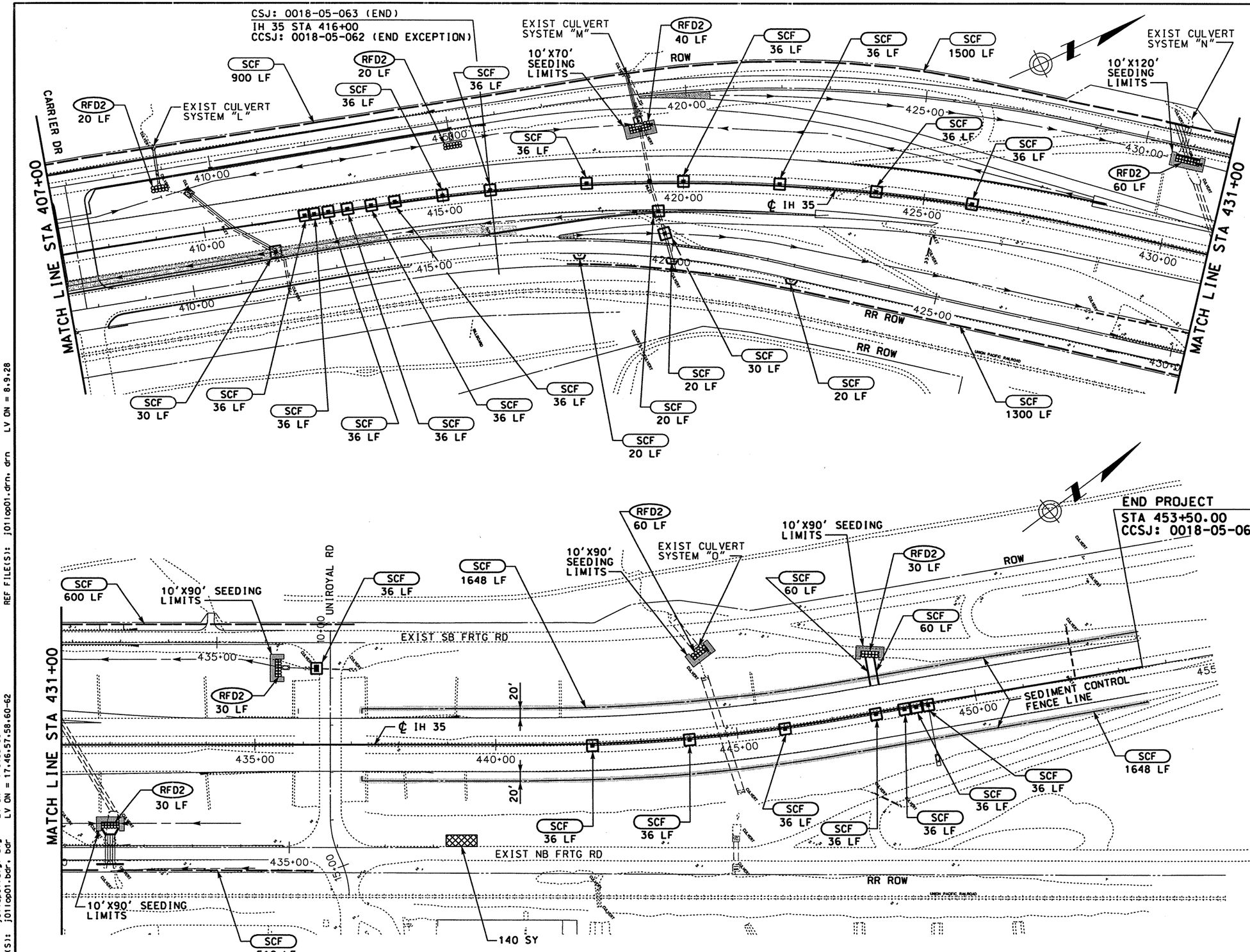

LEGEND:

- SEDIMENT CONTROL FENCE LINE
- ST-DI — DROP INLET SEDIMENT TRAP
- SCF — SEDIMENT CONTROL FENCE
- RFD2 — ROCK FILTER DAM (TYPE 2)
- CONSTRUCTION EXIT (TYPE 1)
- DIRECTION OF DITCH FLOW

NOTE:

1. SEDIMENT CONTROL FENCE AT ROW.
2. FOR SEEDING LIMITS ALONG MAINLANE SEDIMENT CONTROL FENCE LINE SEE DETAIL BELOW

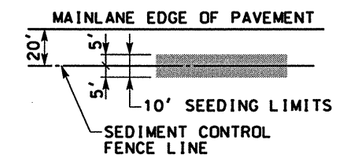

0 100 200
SCALE: 1" = 200'

STATE OF TEXAS — RUDY L. GOMEZ — 58664 — REGISTERED PROFESSIONAL ENGINEER

THE SEAL APPEARING ON THIS DOCUMENT WAS AUTHORIZED BY RUDY L. GOMEZ PE 58664, ON APRIL 30, 2003

KBR
Engineered by KBR Technical Services, Inc

©2003 Texas Department of Transportation

IH 35
LOOP 20 TO UNIROYAL ROAD
SW3P
STA 407+00 TO
STA 455+00

SHEET 6 OF 6

FED RD DIV NO	FEDERAL AID PROJECT NO	SHEET NO
6	NH-2002 (79)	873
STATE	STATE DIST	COUNTY
TEXAS	LAREDO	WEBB
CONT	SECT / JOB	HIGHWAY NO
0018	05 / 062, ETC	IH 35

REF FILE(S): j01lop01.drn, drn LV ON = 8.9.28
REF FILE(S): j01lop01.drn LV ON = 17.46.57.58.60-62
j01lop01.bdr, bdr LV ON = 1-6.35-39
j01lop01.alg, alg LV ON = 2.9.10.14.17.21.25.28
j01lop01.bck, bck LV ON = 1-11.13-17.19-63
j01lop02.eop, eop LV ON = 1-22.24-63
miloint.row, row

b14lop06.dgn-13 HOUFILE023 \hcivil\cf0130\ 4/30/2003

PERMANENT SEEDING---REFER TO SW3P PLAN SHEETS FOR REQUIRED STABILIZATION METHOD

STABILIZATION METHOD

(REFER TO PLAN FOR STABILIZATION METHOD SPECIFIED)

DRILL SEEDING
ITEM * 164-0602 (SY)

(PREFERRED METHOD OF SEEDING---REFER TO PLANS)

THE CONTRACTOR SHALL:

- **Refer** to Item 164 of the Texas Standard Specifications for Construction of Highways, Streets, and Bridges 2003 for specifications, dimensions, volumes, and measurements that have been modified or not shown.
- **Prepare seed bed**
  Refer to "Seed Bed Preparation" sheet 4 of 5
- **Apply seed mixture**
  Refer to "Seed Mix" sheet 1 of 5
- **Apply fertilizer**
  Refer to "Fertilizer" sheet 3 of 5
- **Apply tackifier**
  Refer to "Tackifier (SS-1)" sheet 3 of 5

CELL FIBER MULCH SEED
ITEM * 164-0511 (SY)

(USE ONLY WHERE DRILL SEEDING IS NOT PRACTICAL (REFER TO PLANS)

THE CONTRACTOR SHALL:

- **Refer** to Item 164 of the Texas Standard Specifications for Construction of Highways, Streets, and Bridges 2003 for specifications, dimensions, volumes, and measurements that have been modified or not shown.
- **Prepare seed bed**
  Refer to "Seed Bed Preparation" sheet 4 of 5
- **Apply seed and fertilizer slurry**
  Refer to "Seeding notes" sheet 3 of 5
- **Apply Mulch**
  Refer to the plans for the type of mulch to use.
- **Vegetative Watering**
  Refer to the plans for locations where watering is required. Refer to "Vegetative watering for Seed and Sod" sheet 3 of 5 watering schedule.

BLOCK SOD (BERMUDA)
ITEM *162-0508 (SY)

(PREFERRED USE---URBAN---REFER TO PLANS)

THE CONTRACTOR SHALL:

- **Refer** to Item 164 of the Texas Standard Specifications for Construction of Highways, Streets, and Bridges 2003 for specifications, dimensions, volumes, and measurements that have been modified or not shown.
- **Prepare sod bed**
  Refer to "Sod Bed Preparation" sheet 4 of 5
- **Apply fertilizer**
  Refer to "Fertilizer" sheet 3 of 5
- **Apply Sod**
  Refer to "Sodding for Erosion Control" sheet 4 of 5.
- **Apply Vegetative Watering**
  Refer to plans for system of watering specified.
  Refer to "Vegetative Watering for Seed and Sod" sheet 3 of 5 for watering schedule.

SEED MIX

(CHOOSE SEED MIX BY SEEDING DATE AND SOIL TYPE)

January 15---May 01

RURAL	*	URBAN	*
Tight Soils	*	**Tight Soils**	*
Green Sprangletop	0.3	Green Sprangletop	0.3
Sideoats Grama (Haskell)	3.6	Sideoats Grama (Haskell)	4.5
Plns. Bristlegrass	1.2	Buffalograss (Texoka)	1.6
Buffalograss (Texoka)	1.6	Bermudagrass	1.8
Bermudagrass	1.2		
Ill. Bundleflower	1.0		
Sandy Soils	*	**Sandy Soils**	*
Green Sprangletop	0.3	Green Sprangletop	0.3
Bermudagrass	1.8	Bermudagrass	3.6
Buffelgrass (Common)	0.4	Buffalograss	1.6
Sand Dropseed	0.4	Sand Dropseed	0.4
Lehmans Lovegrass	0.6		
Purple Prairieclover	0.5		

May 01---September 01

RURAL	*	URBAN	*
Tight Soils	*	**Tight Soils**	*
Green Sprangletop	0.3	Green Sprangletop	0.3
Sideoats Grama (Haskell)	3.6	Sideoats Grama (Haskell)	4.5
Plns. Bristlegrass	1.2	Buffalograss (Texoka)	1.6
Buffalograss (Texoka)	1.6	Bermudagrass	1.8
Bermudagrass	1.2	Foxtail Millet	30.0
Ill. Bundleflower	1.0		
Foxtail Millet	30.0		
Sandy Soils	*	**Sandy Soils**	*
Green Sprangletop	0.3	Green Sprangletop	0.3
Bermudagrass	1.8	Bermudagrass	3.6
Buffelgrass (Common)	0.4	Buffalograss	1.6
Sand Dropseed	0.4	Sand Dropseed	0.4
Lehmans Lovegrass	0.6	Foxtail Millet	30.0
Purple Prairieclover	0.5		
Foxtail Millet	30.0		

September 01--January 15

RURAL	*	URBAN	*
Tight Soils	*	**Tight Soils**	*
Green Sprangletop	0.3	Green Sprangletop	0.3
Sideoats Grama (Haskell)	3.6	Sideoats Grama (Haskell)	4.5
Plns. Bristlegrass	1.2	Buffalograss (Texoka)	1.6
Buffalograss (Texoka)	1.6	Bermudagrass	1.8
Bermudagrass	1.2	Oats	64.0
Ill. Bundleflower	1.0		
Oats	64.0		
Sandy Soils	*	**Sandy Soils**	*
Green Sprangletop	0.3	Green Sprangletop	0.3
Bermudagrass	1.8	Bermudagrass	3.6
Sand Dropseed	0.4	Buffalograss	1.6
Buffelgrass Common)	0.4	Sand Dropseed	0.4
Lehmans Lovegrass	0.6	Oats	64.0
Purple Prairieclover	0.5		
Oats	64.0		

* SEED QUANTITIES ARE POUNDS PURE LIVE SEED PER ACRE.

STATE OF TEXAS
RUDY L. GOMEZ
58664
REGISTERED PROFESSIONAL ENGINEER

THE SEAL APPEARING ON THIS DOCUMENT WAS AUTHORIZED BY RUDY L. GOMEZ PE 58664, ON APRIL 18, 2003

KBR
Engineered by KBR Technical Services, Inc

©2003 Texas Department of Transportation

IH 35
LOOP 20 TO UNIROYAL ROAD

SW3P NOTES

SHEET 1 OF 5

FED RD DIV. NO	FEDERAL AID PROJECT NO		SHEET NO
6	NH-2002 (79)		374
STATE	STATE DIST		COUNTY
TEXAS	LAREDO		WEBB
CONT	SECT	JOB	HIGHWAY NO
0018	05	062, ETC	IH 35

REF FILE(S): j01lop01.bdr, bdr LV ON = 47,57,58,60-62
b14gnp02.dgn-01 HOUFILE023 \hcivil\ct0130\ 4/18/2003

TEMPORARY EROSION CONTROL---REFER TO SW3P PLAN SHEETS FOR COORDINATION WITH TCP PHASING
APPLY TO DISTURBED SOIL WHERE WORK IS PLANNED TO CEASE FOR 21 DAYS OR MORE.

TEMPORARY EROSION CONTROL ITEM # 164-0511 (SY)

(PREFERRED USE---DURING CONSTRUCTION---REFER TO PLANS)

THE CONTRACTOR SHALL:

■ Refer to Item 164 of the Texas Standard Specifications for Construction of Highways, Streets, and Bridges 2003 for specifications, dimensions, volumes, and measurements that have been modified or not shown.

■ **SEEDING:**

- **Prepare seed bed**
  Refer to "Seed Bed Preparation" sheet 4 of 5
- **Apply seed and fertilizer slurry**
  Refer to "Seeding notes" sheet 3 of 5
- **Apply Mulch**
  Refer to the plans for the type of mulch to use.
- **Vegetative Watering**
  Refer to the plans for locations where watering is required. Refer to "Vegetative Watering for Seed and Sod" sheet 3 of 5 watering schedule.

■ **TACKIFIER:**

- **Apply tackifier**
  Refer to "Tackifier (SS-1)" sheet 3 of 5

AVAILABLE TEMPORARY EROSION CONTROL METHODS
(REFER TO SW3P PLAN SHEET FOR SPECIFIED METHOD)

TYPE OF TEMPORARY SOIL STABILIZATION PRACTICE SHALL BE APPROVED BY THE ENGINEER.

CELL FIB MULCH SEED---ITEM #164-0511 (SY)
September 01---April 30
Oats @ 64.0 Pound per Acre
May 01---August 31
Foxtail Millet @ 30 Pounds per Acre

or

TACKIFIER---Subsidiary to item #164
For specifications, refer to item 300 of the Texas Standard Specifications for Construction of Highways, Streets, and Bridges 2003 for specifications, dimensions, volumes, and measurements that have been modified or not shown.

STATE OF TEXAS
RUDY L. GOMEZ
58664
REGISTERED PROFESSIONAL ENGINEER

THE SEAL APPEARING ON THIS DOCUMENT WAS AUTHORIZED BY RUDY L. GOMEZ PE 58664, ON APRIL 18, 2003

KBR
Engineered by KBR Technical Services, Inc

©2003 Texas Department of Transportation

IH 35
LOOP 20 TO UNIROYAL ROAD

SW3P NOTES

SHEET 2 OF 5

FED RD DIV NO	FEDERAL AID PROJECT NO		SHEET NO
6	NH-2002 (79)		875
STATE	STATE DIST		COUNTY
TEXAS	LAREDO		WEBB
CONT	SECT	JOB	HIGHWAY NO
0018	05	062, ETC	IH 35

SEEDING NOTES:

1. Contractor ~~shall be~~ responsible for referencing Item 164 of the Texas Standard Specifications Construction of Highways, Streets and Bridges 2003 for specifications, dimensions, volumes, and measurements that have been modified or not shown.
2. All seed shall meet labelling, delivery, analysis, and testing requirements as described in Item 164.2(1)
3. All seeding ~~shall be~~ accomplished using a "TURFGRASS TYPE" seeder, Pasture type drill seeders ~~will not be~~ allowed.
4. All seed ~~shall be~~ drilled to a depth of 1/4 inch to 1/2 inch. Refer to seedbed preparation (sheet 4 of 5)
5. Drill seeding without compost:
   - Prepare seedbed. Refer to seedbed preparation (sheet 4 of 5). Fertilizer ~~shall be~~ applied under Item 166 prior to seeding to work fertilizer into soil.
   - Fertilizer ~~shall be~~ applied under Item 166 prior to seeding to help work fertilizer into soil.
   - Refer to Item 166 Fertilizer this sheet for specifications and application rate. Drill seed into prepared seedbed.
   - Apply hay mulch at the rate of 1.5-2.0 tons per acre or straw mulch at the rate of 2.0-2.5 tons per acre. Cellulose fiber mulch may be used---refer to sheet 3 of 5 for application rates.
   - Apply a tackifyer at the rate specified on sheet 3 of 5.
   - Drill seed into prepared seedbed.
6. Cultivate all areas to be seeded to a depth of 4" as described in Item 164.
7. Where drill seeding is specified, and site conditions prevent it, broadcast seeding is permitted as approved by the engineer.
8. CELL FIBER MULCH SEEDING ~~shall~~ only be used where site conditions prevent drill seeding (refer to plan sheets for type of seeding). Seeding ~~shall~~ be a two-step process as detailed above.
9. Vegetative watering ~~shall be~~ paid for under Item 168. Watering rate and specifications ~~shall be~~ as shown on sheet 3 of 5 Item 168. Refer to the plan sheets for quantities.

FERTILIZER — ITEM 166---FERTILIZER

APPLICATION RATE

FERTILIZER ~~SHALL BE~~ APPLIED AT THE RATE OF 100 POUNDS NITROGEN PER ACRE UNLESS OTHERWISE DIRECTED.

ITEM 166---FERTILIZER IS NOT PAID FOR DIRECTLY, BUT IS SUBSIDIARY TO SEEDING OR SODDING ITEM.

FERTILIZER NOTES:

1. Contractor ~~shall be~~ responsible for referencing Item 166 of the Texas Standard Specifications for Construction of Highways, Streets and Bridges 2003 for specifications, dimensions, volumes and measurements that have been modified or not shown.
2. Fertilizer ~~shall be~~ applied before sodding, and may be applied with cellulose fiber mulch seeding.
3. The product ~~shall be~~ granular and essentially dust free.
4. Fertilizer product ~~shall be~~ registered with the office of the Texas State Chemist as a commercial fertilizer; the contractor ~~shall~~ provide proof of registration and analysis to the engineer for approval prior to use.

VEGETATIVE WATERING FOR SEED AND SOD — ITEM 168---VEGETATIVE WATERING

RURAL---NO VEGETATIVE WATERING
URBAN---TEMPORARY IRRIGATION---REFER TO IRRIGATION PLAN SHEETS FOR ZONE TIMES.
URBAN---TRUCK IRRIGATION---REFER TO WATERING SCHEDULE BELOW:
ALWAYS INCLUDE VEGETATIVE WATERING FOR SODDED SITES.

WATERING SCHEDULE:

	FIRST 14 DAYS	14-28 DAYS	28-42 DAYS	TOTAL CYCLES
Seeded Sites	Twice per day	Twice per day	Once per day	70
Sodded Sites	Twice per day	Once per day	———	42

Standard watering rate is 1/4 inch per acre per cycle. However, rate and frequency may be adjusted, with the approval of the engineer, to meet site conditions.

VEGETATIVE WATERING NOTES:

1. Contractor ~~shall be~~ responsible for referencing Item 168 of the Texas Standard Specifications for Construction of Highways, Streets and Bridges 2003 for specifications, dimensions, volumes and measurements that have been modified or not shown.
2. All watering equipment ~~shall~~ have a meter device.
3. Water shall be evenly distributed over entire area(s) designated for seeding and/or sodding.
4. Should the contractor fail to apply the specified amount of water within the time allowed any seed or sod in poor condition ~~shall be~~ replaced, fertilized, and watered at the contractor's expense.
5. Vegetative watering for sod shall commence within twenty-four hours of laying of sod.

TACKIFIER — SUBSIDIARY TO ITEM 164

APPLICATION RATE

SS-1 Tacking agent ~~shall be~~ a two (Emulsion) to one (Water) ratio of 0.05 gallons per SY.
A biodegradable tacking agent ~~may be~~ used in lieu of SS-1 as approved by the Engineer.

TACKIFIER NOTES:

1. Contractor ~~shall be~~ responsible for referencing Item 164 of the Texas Standard Specifications for Construction of Highways, Streets and Bridges 2003 for specifications, dimensions, volumes and measurements that have been modified or not shown.
2. Tackifier is not paid for directly, but is subsidiary to item 164.

FURN & PLAC TOPSOIL — ITEM 160---FURN & PLAC TOPSOIL

APPLICATION RATE

Refer to "SW3P Plan Sheets" for further instructions regarding preservation, storage, and placement of topsoil.

FURN & PLAC TOPSOIL NOTES:

1. Contractor ~~shall be~~ responsible for referencing Item 160 of the Texas Standard Specifications for Construction of Highways, Streets and Bridges 2003 for specifications, dimensions, volumes and measurements that have been modified or not shown.
2. The following topsoil specification ~~shall be~~ used for sources outside of TxDOT right of way:

   PH 6-7.5
   SALINITY <1200 PPM

   Chemical analysis (MECHLICH III or TAMU EXTRACT test):

   PHOSPHORUS >50 PPM, <200 PPM
   POTASSIUM >150 PPM

   Grading analysis:

   100% PASS 2" SIEVE
   90% PASS #4 SIEVE
   80% PASS #10 SIEVE

   Textural classification (USDA SOIL TEXTURAL ANALYSIS):

   SAND <65%
   SILT <65%
   CLAY <35%

   Organic matter 0.5% by weight (MIN)

   By-products of aggregate crushing operation ~~shall not be~~ allowed.

   A soil analysis of the topsoil ~~shall be~~ submitted to the engineer. Soil analysis ~~shall be~~ from an accredited soils laboratory, and ~~shall~~ include N-P-K + MICRO + B + LIME + ORGANIC MATTER + TEXTURE + SALINITY.

   All topsoil testing ~~shall not be~~ paid for directly, but ~~shall be~~ subsidiary to item #160 "Furn & Plac Topsoil".

STATE OF TEXAS — RUDY L. GOMEZ — P.E. 58664 — REGISTERED PROFESSIONAL ENGINEER

THE SEAL APPEARING ON THIS DOCUMENT WAS AUTHORIZED BY RUDY L. GOMEZ PE 58664, ON APRIL 18, 2003

KBR
Engineered by KBR Technical Services, Inc

©2003 Texas Department of Transportation

IH 35
LOOP 20 TO UNIROYAL ROAD

SW3P NOTES

SHEET 3 OF 5

FED RD DIV NO	FEDERAL AID PROJECT NO		SHEET NO
6	NH-2002 (79)		876
STATE	STATE DIST		COUNTY
TEXAS	LAREDO		WEBB
CONT	SECT	JOB	HIGHWAY NO
0018	05	062, ETC	IH 35

REF FILE(S): j01lop01.bdr, bdr LV ON = 47.57.58.60-62

b14gnp04.dgn-01 HOUFILE023 \hcivil\cf0130\ 4/18/2003

CELLULOSE FIBER MULCH

ITEM 164---CELL FIB MULCH

APPLICATION RATE
Cellulose fiber mulch ~~shall be~~ evenly distributed at a rate of 2500 pounds/acre

CEL FIB MULCH NOTES:

1. Contractor ~~shall be~~ responsible for referencing Item 164 of the Texas Standard Specifications for Construction of Highways, Streets and Bridges 2003 for specifications, dimensions, volumes and measurements that have been modified or not shown.

FURNISH & PLACE COMPOST

ITEM 1058---FURNISH & PLACE COMPOST

APPLICATION RATE
Compost ~~shall be~~ distributed one inch thick on seed bed and thoroughly incorporated into the seedbed to a depth of four inches.

FURNISH & PLACE COMPOST NOTES:

1. Contractor ~~shall be~~ responsible for referencing Special Specification 1058 for dimensions, volumes and measurements that have been modified or not shown.

SODDING FOR EROSION CONTROL

ITEM 162---BLOCK SOD (BERMUDA)

BLOCK SOD

COMMON NAME	BOTANICAL NAME
Common Bermuda Grass	Cynodon Dactylon
Buffalograss	Buchloe Dactyloides
REFER TO PLAN SHEETS FOR TYPE OF SOD SPECIFIED.	

SODDING NOTES:

1. Contractor ~~shall be~~ responsible for referencing Item 162 of the Texas Standard Specifications for Construction of Highways, Streets and Bridges 2003 for specifications, dimensions, volumes and measurements that have been modified or not shown.
2. Sod ~~may be~~ block or roll type.
3. All sod ~~shall be~~ placed within 48 hours of delivery to the site.
4. Sod ~~shall be~~ placed only after soil preparation is complete and fertilizer has been applied to soil.
5. Sod blocks ~~shall be~~ placed firmly against adjacent sod blocks.
6. Sod ~~shall be~~ placed with joints alternating on each row to prevent all joints from lining up.
7. Sod which may slide on slopes or drainage ways ~~shall be~~ pegged according to Item 162.
8. Vegetative watering ~~shall be~~ paid for under Item 168.

SEED BED PREPARATION---DRILL SEEDING

ITEM 164---SEEDING FOR EROSION CONTROL
with 166 FERTILIZER (TON)
1058 GENERAL USE COMPOST (CY)

Prior to bed preparation refer to construction method notes---this page.

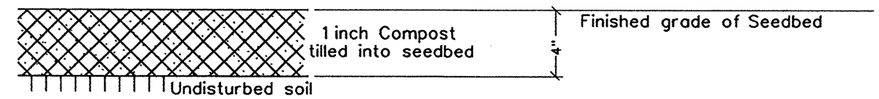

LEGEND
TILLING
COMPOST

SEED BED PREPARATION---CELL FIBER MULCH SEED

ITEM 164---SEEDING FOR EROSION CONTROL
WITH 166 FERTILIZER (TON)

Prior to bed preparation refer to construction method notes---this page.

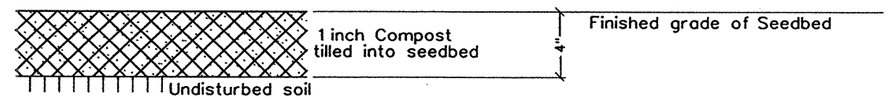

LEGEND
TILLING
COMPOST

SOD BED PREPARATION

ITEM 162---SODDING FOR EROSION CONTROL
with 166 FERTILIZER (TON)
1058 GENERAL USE COMPOST (CY)

Prior to bed preparation refer to construction method notes---this page.

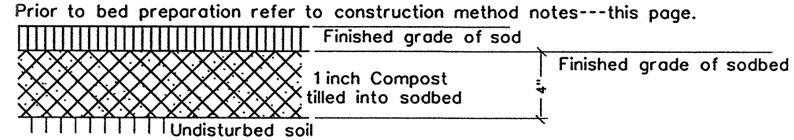

LEGEND
TILLING
COMPOST

GENERAL SEED BED/SOD BED PREPARATION NOTES:

1. All concrete, steel, trash, and other debris uncovered during seedbed preparation work which the engineer determines as detrimental to the project ~~shall~~ become the responsibility of the contractor, and ~~shall be~~ disposed of in an approved manner.
2. Seedbed preparation ~~shall not be~~ paid for directly, but ~~shall be~~ subsidiary to item 162 "Sodding for Erosion Control.

CONSTRUCTION METHODS:

1. Project areas receiving special treatment ~~shall be~~ staked or otherwise designated as to the proper locations to the plans, final locations shall be approved by the Engineer before continuing work under this item.
2. Compost ~~shall be~~ general use compost as described in special Specification Item 1058 Furnishing and Placing Compost. Compost ~~shall be~~ evenly distributed over project area(s) at a depth of one (1) inch. Compost ~~shall be~~ paid for separately.
3. Fertilizer ~~shall be~~ evenly distributed over project area (s) at a rate and type as shown on Fertilizer and Sodding For Erosion Control (Sheet 3 of 5). Fertilizer is subsidiary to Item 162 Sodding for Erosion Control or Item 164 Seeding for Erosion Control.
4. After applying compost and fertilizer, project area(s) ~~shall be~~ tilled to a smooth consistency to a depth of four (4) inches.
5. Contractor ~~shall~~ take special precautions to avoid any underground utilities within the project area(s) and from altering existing drainage patterns

STATE OF TEXAS
RUDY L. GOMEZ
58664
REGISTERED PROFESSIONAL ENGINEER

THE SEAL APPEARING ON THIS DOCUMENT WAS AUTHORIZED BY RUDY L. GOMEZ PE 58664, ON APRIL 18, 2003

Rudy L. Gomez

KBR
Engineered by KBR Technical Services, Inc

©2003 Texas Department of Transportation

IH 35
LOOP 20 TO UNIROYAL ROAD

SW3P NOTES

SHEET 4 OF 5

FED RD DIV NO	FEDERAL AID PROJECT NO		SHEET NO
6	NH-2002 (79)		377
STATE	STATE DIST		COUNTY
TEXAS	LAREDO		WEBB
CONT	SECT	JOB	HIGHWAY NO
0018	05	062, ETC	IH 35

REF FILE(S): J011op01.bdr, bdr LV ON = 47,57,58,60-62

b14gp05.dgn-01 HOUFILE023 \hcivil\cf0130\ 4/18/2003

GENERAL TREE PROTECTION NOTES:

1. These notes govern the measures necessary to protect and assure the continued good health of existing trees identified on the plans or directed by the Engineer as "to be protected". The measures shall include providing, installing, maintaining and removing upon completion of work, protective fences and bound wood planking. The measures also include all items listed below in these notes.
2. Tree protection required before any heavy equipment is allowed on the site and remain in place for the duration of the project.

PROTECTIVE FENCE

1. Critical Root Zone (CRZ)= 1 foot radius per 1 caliper inch of trunk diameter.
2. Place protective fence at the edge of the critical root zone of trees to be protected. Protective fence shall be 4 feet high orange plastic mesh or approved equivalent supported on steel T-post. Steel T-post minimum of 6 feet long, spaced at 3 foot intervals, and driven into the ground a minimum of 20 inches. Smooth galvanized wire stretch from post to post across the top of the fence and drawn tight. Plastic mesh attached to the posts and top wire with aluminum tie wire or nylon ties spaced at 3 foot intervals.
3. No excavation, grading, filling, soil compaction, parking, or equipment storage is allowed within the fenced area.
4. Where a situation exists that a construction zone partially overlaps the root zone, move fence to allow construction activity as approved by the engineer.
5. Install protective compost filter berm at base of protective fence as shown in detail and described in these notes under "Root Zone Protection". Compost filter berm functions as a protective filter from runoff associated with construction activities such as: concrete wash, erosion, fill, chemicals, cement and lime work and other activities.

VEGETATIVE WATERING FOR TREE PROTECTION

1. Trees shall be watered at a rate of 30 gallons per week for every week during construction activities. Watering paid for separately under Item 168-501 Vegetative Watering by the MG.

TRUNK PROTECTION

1. Where protective fence is located closer than 6 feet from a tree trunk from any direction, the tree trunk shall be protected with bound wood planking. Wood planks construction grade lumber a minimum of 1 inch by 6 inch nominal. Banding natural or synthetic fiber rope, band, or strap of sufficient gauge and quality to keep protective planking in place around tree for the duration of the project. Wood planks strapped installed to a height of 10 feet, or the height of the lowest major branching, whichever is less. Under no circumstance nails, screws or other damaging attachment method be used.

ROOT ZONE PROTECTION

1. Cover entire area of critical root zone with 4" erosion control compost. Erosion control compost shall be paid for separately under Item 1027-503 Erosion Control Compost(class 3) CY. See Special Specification 1058 Furnishing and Placing Compost for compost requirements
2. Install protective compost filter berm at base of protective fence along edge of critical root zone as shown on detail this sheet. Compost filter berm installed along entire edge of protected critical root zone. Compost filter berm 1 foot tall and 2 feet wide at base. Material used for berm erosion control compost and be paid for under Item 1059 Erosion Control Compost. Berm maintained throughout project.
3. Vehicular traffic, stockpiling or storage of materials, parking of equipment and refueling equipment is prohibited in protected areas.

BORING, TRENCHING, GRADING, AND PRUNING

1. Where shown elsewhere in plans, proposed underground utilities crossing under protected areas shall be bored beneath critical root zones. Bores should avoid crossing directly beneath root flare. Bores a minimum of 4 feet below existing grade.
2. No trenching, excavating, filling, or compaction is allowed within the critical root zone except as specifically identified in the plans and approved by the Engineer.
3. When existing grade must be cut within the critical root zone, contact the Engineer prior to beginning work. Before grading or excavation work, saw cut roots to the depth of the disturbance along the edge of the d disturbance before excavation is begun.
4. Any roots exposed by construction pruned flush with the soil. Backfill root areas with good quality topsoil as soon as possible. If exposed root areas are not backfilled within two days, they temporarily covered with a minimum of six inches of erosion control compost. Erosion Control Compost paid for separately under Item 1059 Erosion Control Compost.
5. Except for work within the limits of existing and roadway pavement, grading within the critical root zone done by hand or small equipment and grade altered no more than 2 inches. No soil disturbance is allowed on the root flare under any circumstances.
6. Any pruning to provide clearance for structures, vehicular traffic, and construction equipment shall be performed before construction damage might occur. If damage has occured prior to pruning, pruning must be done within two hours of occurrence and according with ANSI A300-1995 standard.

REMOVAL OF TREE PROTECTION MATERIALS

1. Contractor remove and dispose of all protective fencing and trunk protection at end of project.

REQUIRED ITEMS:

- Item 100-519 Prep ROW (Tree Preserv) (EA)
- Item 168-501 Vegetative Watering (MG)
- Item 1058 General Use Compost (CY)
- Item 1059 Erosion Control Compost (CY)

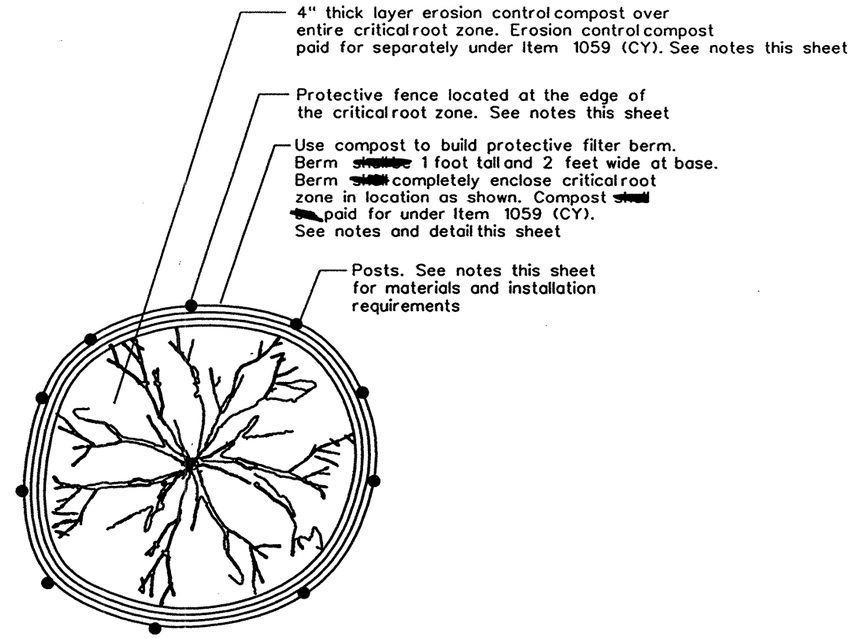

PLAN VIEW OF INDIVIDUAL TREE AND PROTECTIVE FENCE

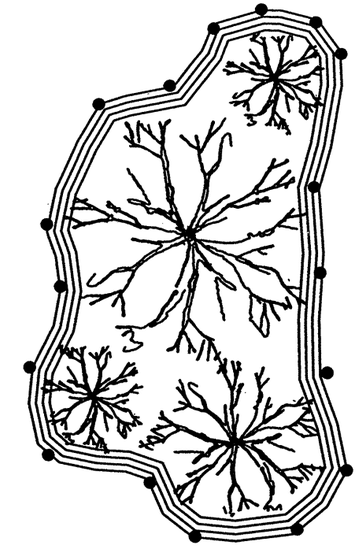

PLAN VIEW OF TREE GROUP AND PROTECTIVE FENCE

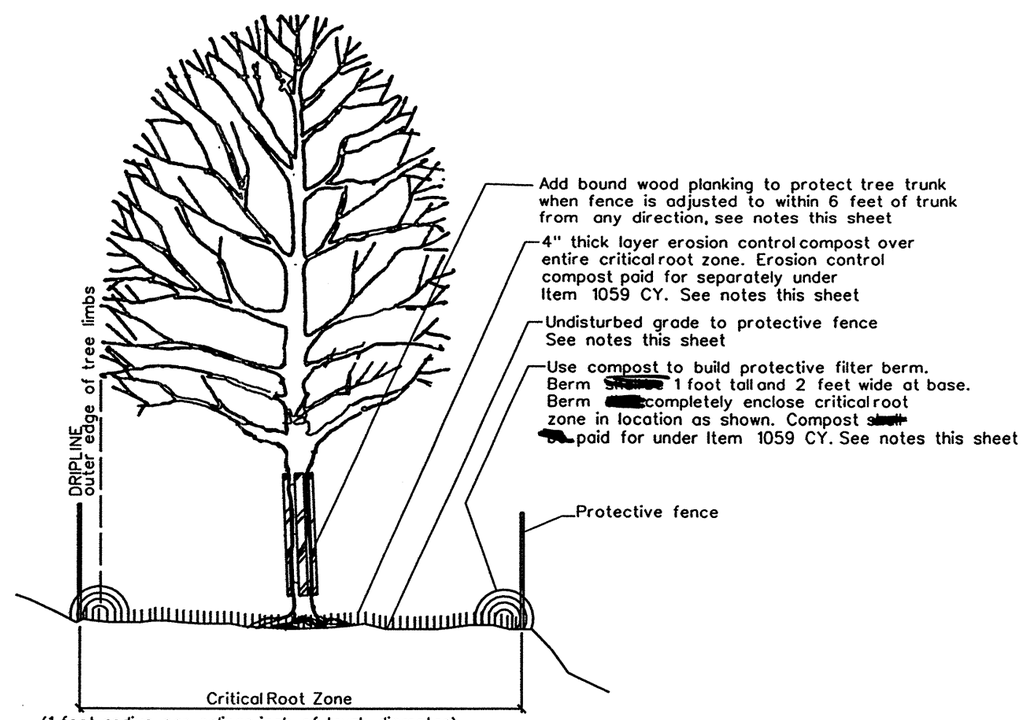

(1 foot radius per caliper inch of trunk diameter)
OR AS DIRECTED BY THE ENGINEER

TYPICAL TREE PROTECTION

STATE OF TEXAS
RUDY L. GOMEZ
58664
REGISTERED PROFESSIONAL ENGINEER

THE SEAL APPEARING ON THIS DOCUMENT WAS AUTHORIZED BY RUDY L. GOMEZ PE 58664, ON APRIL 18, 2003

KBR
Engineered by KBR Technical Services, Inc

©2003 Texas Department of Transportation

IH 35
LOOP 20 TO UNIROYAL ROAD

SW3P NOTES

SHEET 5 OF 5

FED RD DIV NO	FEDERAL AID PROJECT NO		SHEET NO
6	NH-2002 (79)		878
STATE	STATE DIST		COUNTY
TEXAS	LAREDO		WEBB
CONT	SECT	JOB	HIGHWAY NO
0018	05	062, ETC	IH 35

REF FILE(S): j011op01.bdr, bdr LV DN = 47,57,58,60-62

b14gnp06.dgn-01 HOUFILE023 \hcivil\cf0130\ 4/18/2003

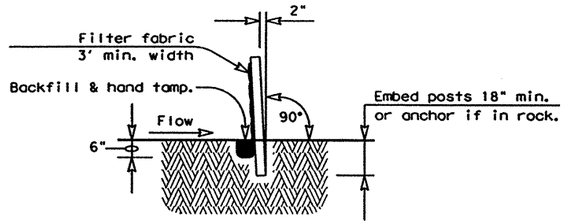

SECTION A-A

SEDIMENT CONTROL FENCE USAGE GUIDELINES

A sediment control fence may be constructed near the downstream perimeter of a disturbed area along a contour to intercept sediment from overland runoff. A 2 year storm frequency may be used to calculate the flow rate to be filtered.

Sediment control fence should be sized to filter a max. flow through rate of 100 GPM/FT^2. Sediment control fence is not recommended to control erosion from a drainage area larger than 2 acres.

PLAN SHEET LEGEND

Sediment Control Fence —— SCF ——

GENERAL NOTES

1. The guidelines shown hereon are suggestions only and may be modified by the Engineer.

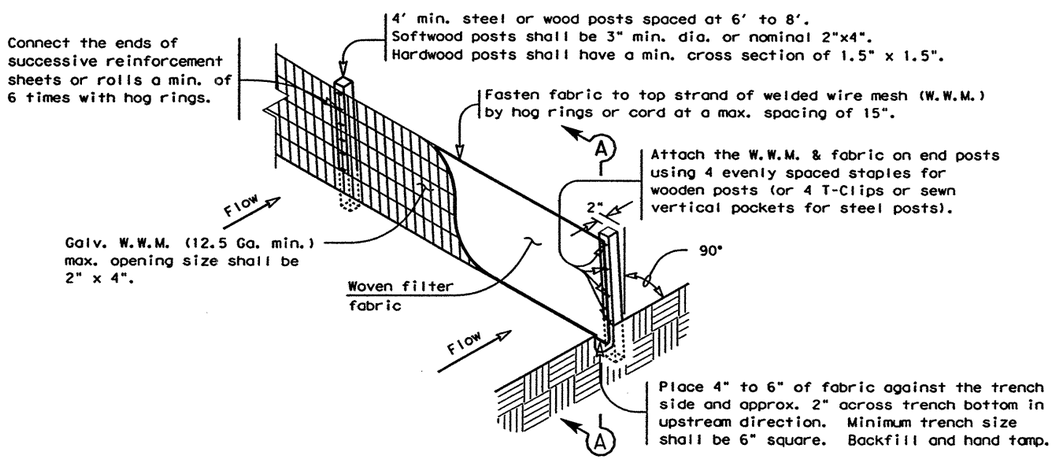

TEMPORARY SEDIMENT CONTROL FENCE

—— SCF ——

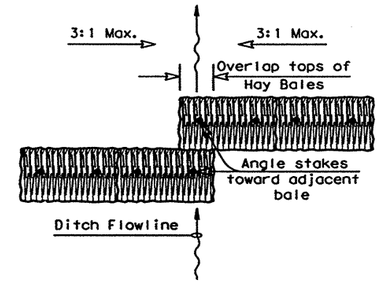

PLAN VIEW

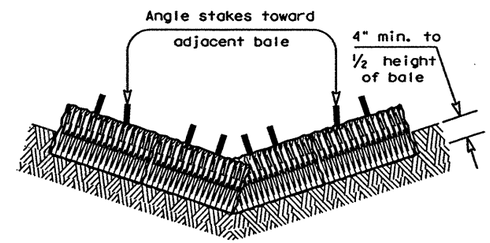

PROFILE VIEW

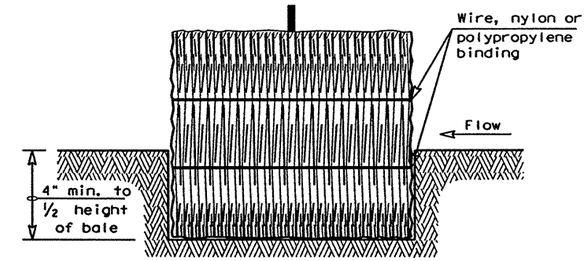

SECTION B-B

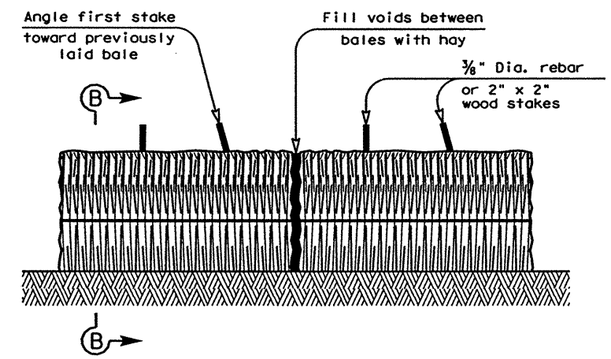

BALED HAY FOR EROSION CONTROL

—— BH ——

PLANS SHEET LEGEND

Baled Hay —— BH ——

GENERAL NOTES

1. Hay bales shall be a minimum of 30" in length and weigh a minimum of 50 Lbs.
2. Hay bales shall be bound by either wire or nylon or polypropylene string. The bales shall be composed entirely of vegetative matter.
3. Hay bales shall be embedded in the soil a minimum of 4" and where possible ½ the height of the bale.
4. Hay bales shall be placed in a row with ends tightly abutting the adjacent bales. The bales shall be placed with bindings parallel to the ground.
5. Hay bales shall be securely anchored in place with ⅜" Dia. rebar or 2" x 2" wood stakes, driven through the bales. The first stake shall be angled towards the previously laid bale to force the bales together.
6. The guidelines shown hereon are suggestions only and may be modified by the Engineer.

BALED HAY USAGE GUIDELINES

A Baled Hay installation may be constructed near the downstream perimeter of a disturbed area along a contour to intercept sediment from overland runoff. A two year storm frequency may be used to calculate the flow rate to be filtered. The installation should be sized to filter a maximum flow thru rate of 5 GPM/FT^2 of cross sectional area. Baled hay may be used at the following locations:

1. Where the runoff approaching the baled hay flows over disturbed soil for less than 100'. If the slope of the disturbed soil exceeds 10%, the length of slope upstream the baled hay should be less than 50'.
2. Where the installation will be required for less than 3 months.
3. Where the contributing drainage area is less than ½ acre.

For Baled Hay installations in small ditches, the additional following considerations apply:

1. The ditch sideslopes should be graded as flat as possible to maximize the drainage flowrate thru the hay.
2. The ditch should be graded large enough to contain the overtopping drainage when sediment has filled to the top of the baled hay.

Bales should be replaced usually every 2 months or more often during wet weather when loss of structural integrity is accelerated.

DISCLAIMER:
The use of this standard is governed by the "Texas Engineering Practice Act". No warranty of any kind is made by TxDOT for any purpose whatsoever. TxDOT assumes no responsibility for the conversion of this standard to other formats or for incorrect results or damages resulting from its use.

LEVELS DIS...CD

1		3	4	5	6	7	8	9	10	11	12	13	14	15	16
17	18	19	20	21	22	23	24	25	26	27	28	29	30	31	32
33	34	35	36	37	38	39	40	41	42	43	44	45	46	47	48
49	50	51	52	53	54	55	56	57	58	59	60	61	62	63	

Texas Department of Transportation
Design Division (Roadway)

TEMPORARY EROSION, SEDIMENT AND WATER POLLUTION CONTROL MEASURES

FENCED & BALED HAY

EC(1)-93

FILE: ~~EC193.DGN~~	DN: HEJ	CK: HEJ	DW: BGD	CK:
©TxDOT JUNE 1993	DISTRICT	FEDERAL AID PROJECT		SHEET
REVISIONS	22	NH-2002 (79)		879

COUNTY	CONTROL	SECT	JOB	HIGHWAY
WEBB	0018	05	062, ETC	IH 35

b34mop34. dgn-01 HOUFILE023 \hcivil\cf0130\ 4/18/2003

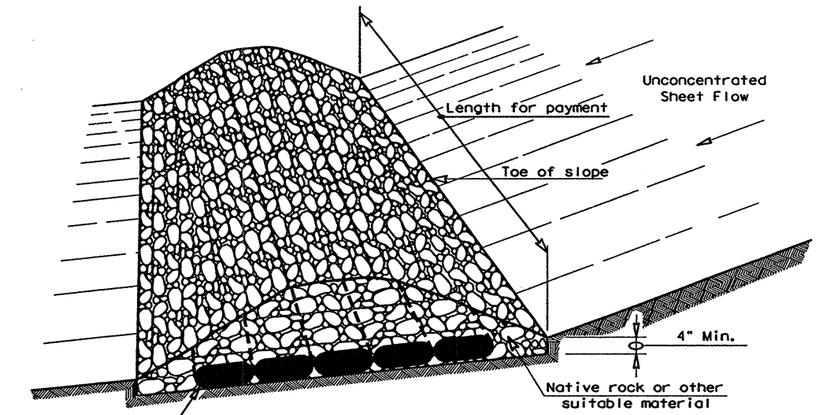

FILTER DAM AT TOE OF SLOPE

RFD1

TYPE 1

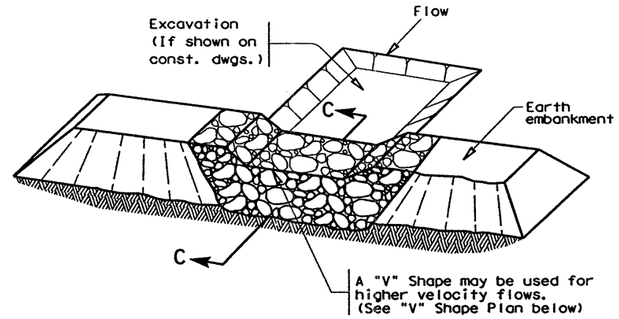

FILTER DAM AT SEDIMENT TRAP

RFD1 — OR — RFD2

TYPE 1 OR TYPE 2

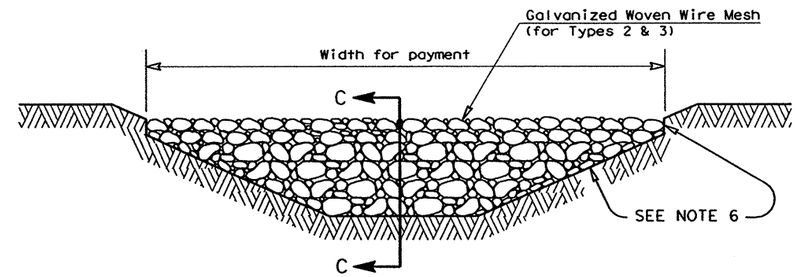

FILTER DAM AT CHANNEL SECTIONS

RFD1 — OR — RFD2 — OR — RFD3

TYPE 1 OR TYPE 2

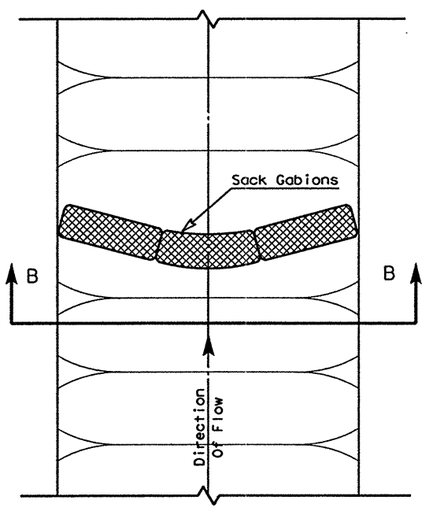

PLAN VIEW

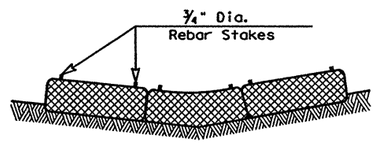

SECTION B-B

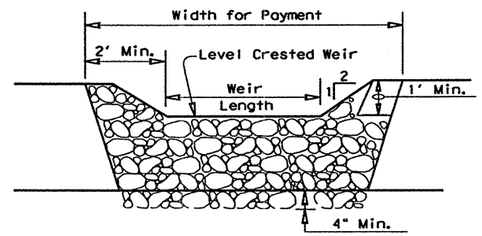

PROFILE

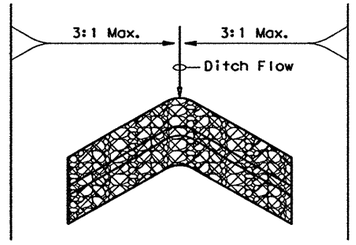

"V" SHAPE

(Plan View)

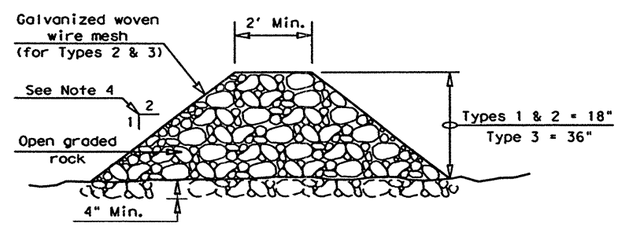

SECTION C-C

PLANS SHEET LEGEND

Type 1 Rock Filter Dam — RFD1

Type 2 Rock Filter Dam — RFD2

Type 3 Rock Filter Dam — RFD3

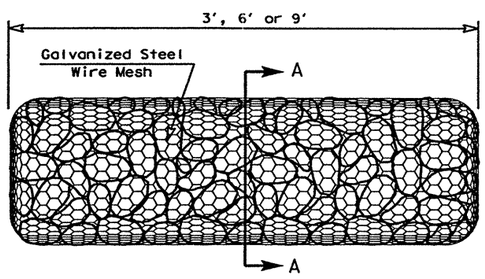

TYPE 4 (SACK GABIONS)

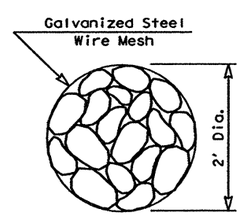

SECTION A-A

ROCK FILTER DAM USAGE GUIDELINES

Rock Filter Dams should be constructed downstream from disturbed areas to intercept sediment from overland runoff and/or concentrated flow. The dams should be sized to filter a maximum flow through rate of 60 GPM/FT^2 of cross sectional area. A 2 year storm frequency may be used to calculate the flow rate.

Type 1 (18" high with no wire mesh): Type 1 may be used at the toe of slopes, around inlets, in small ditches, and at dike or swale outlets. This type of dam is recommended to control erosion from a drainage area of 5 acres or less. Type 1 may not be used in concentrated high velocity flows (approx. 8 Ft/Sec or more) in which aggregate wash out may occur. Sandbags may be used at the embedded foundation (4" deep min.) for better filtering efficiency of low flows if called for on the plans or directed by the Engineer.

Type 2 (18" high with wire mesh): Type 2 may be used in ditches and at dike or swale outlets.

Type 3 (36" high with wire mesh): Type 3 may be used in stream flow and should be secured to the stream bed.

Type 4 (Sack gabions): Type 4 May be used in ditches and smaller channels to form an erosion control dam.

GENERAL NOTES

1. If shown on the plans or directed by the Engineer, filter dams should be placed near the toe of slopes where erosion is anticipated, upstream and/or downstream at drainage structures, and in roadway ditches and channels to collect sediment.
2. Materials (aggregate, wire mesh, sandbags, etc.) shall be as indicated by the specification for "Rock Filter Dams for Erosion and Sedimentation Control".
3. The rock filter dam dimensions shall be as indicated on the SW3P plans.
4. Side slopes should be 2:1 or flatter. Dams within the safety zone shall have sideslopes of 6:1 or flatter.
5. Maintain a minimum of 1' between top of rock filter dam weir and top of embankment for filter dams at sediment traps.
6. Filter dams should be embedded a minimum of 4" into existing ground.
7. The sediment trap for ponding of sediment laden runoff shall be of the dimensions shown on the plans.
8. Rock filter dam types 2 & 3 shall be secured with 20 gauge galvanized woven wire mesh with 1" diameter hexagonal openings. The aggregate shall be placed on the mesh to the height & slopes specified. The mesh shall be folded at the upstream side over the aggregate and tightly secured to itself on the downstream side using wire ties or hog rings. In stream use the mesh should be secured or staked to the stream bed prior to aggregate placement.
9. Sack Gabions should be staked down with ¾" dia. rebar stakes.
10. Flow outlet should be onto a stabilized area (vegetation, rock, etc.).
11. The guidelines shown hereon are suggestions only and may be modified by the Engineer.

Texas Department of Transportation
Design Division (Roadway)

TEMPORARY EROSION, SEDIMENT AND WATER POLLUTION CONTROL MEASURES

ROCK FILTER DAMS

EC(2)-93

FILE: ~~EC093.DGN~~	DN: HEJ	CK: HEJ	DW: BGD	CK:	
©TxDOT JUNE 1993	DISTRICT	FEDERAL AID PROJECT			SHEET
REVISIONS	22	NH-2002 (79)			880
	COUNTY	CONTROL	SECT	JOB	HIGHWAY
	WEBB	0018	05	062, ETC	IH 35

DISCLAIMER:
The use of this standard is governed by the "Texas Engineering Practice Act". No warranty of any kind is made by TxDOT for any purpose whatsoever. TxDOT assumes no responsibility for the conversion of this standard to other formats or for incorrect results or damages resulting from its use.

LEVELS DELETED
1 3 4 5 6 7 8 9 10 11 12 13 14 15 16
17 18 19 20 21 22 23 24 25 26 27 28 29 30 31 32
33 34 35 36 37 38 39 40 41 42 43 44 45 46 47 48
49 50 51 52 53 54 55 56 57 58 59 60 61 62 63

4/18/2003

HOUFILE023 \hcivil\cf0130\

b34mop35.dgn-01

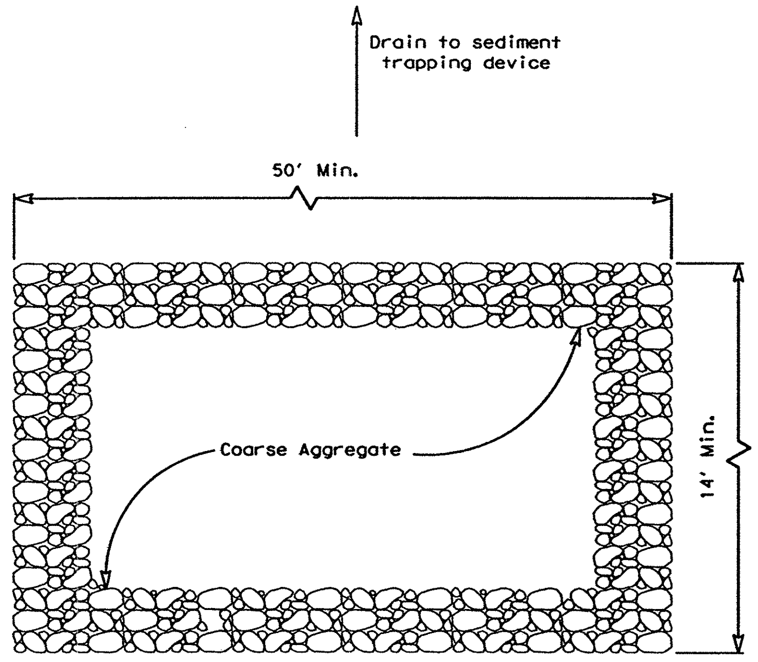

PLAN

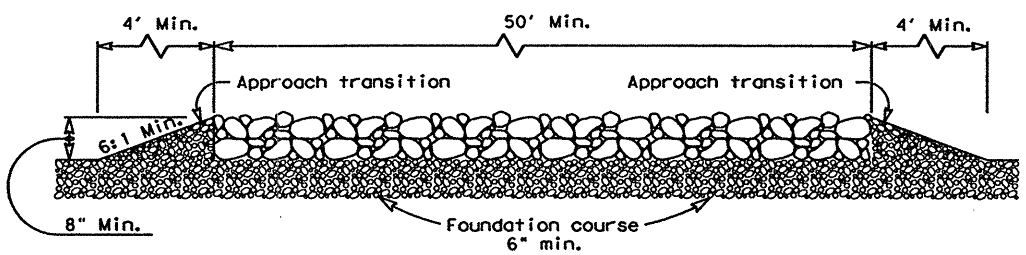

PROFILE

CONSTRUCTION EXIT (TYPE 1)

GENERAL NOTES

1. The length of the type 1 construction exit shall be as indicated on the plans, but not less than 50'.
2. The coarse aggregate should be open graded with a size of 4" to 8".
3. The approach transitions should be no steeper than 6:1 and constructed as directed by the Engineer.
4. The construction exit foundation course shall be flexible base, bituminous concrete, portland cement concrete or other material as approved by the Engineer.
5. The construction exit shall be graded to allow drainage to a sediment trapping device.
6. The guidelines shown hereon are suggestions only and may be modified by the Engineer.

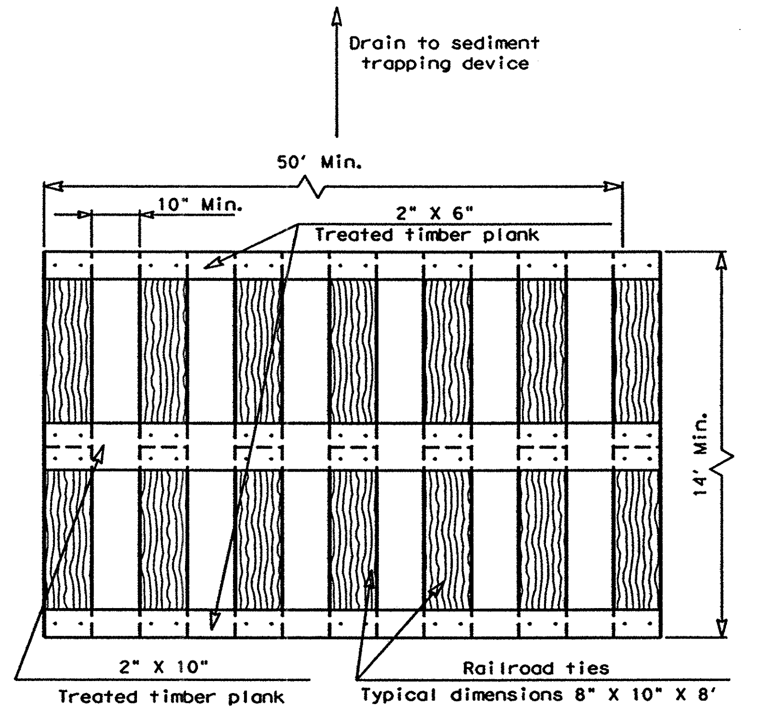

PLAN

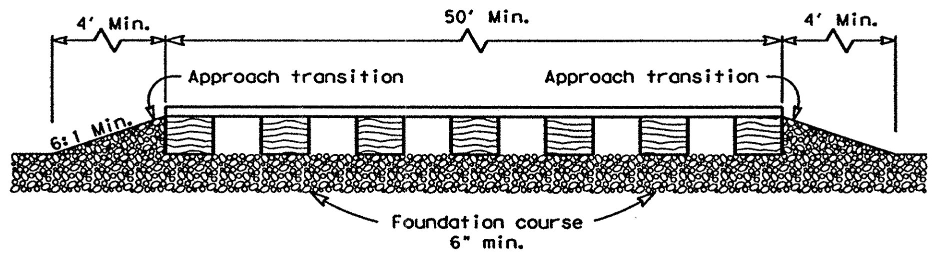

PROFILE

CONSTRUCTION EXIT (TYPE 2)

GENERAL NOTES

1. The length of the type 2 construction exit shall be as indicated on the plans, but not less than 50'.
2. The treated timber planks shall be attached to the railroad ties with ½"x 6" min. lag bolts. Other fasteners may be used as approved by the Engineer.
3. The treated timber planks shall be #2 grade min., and should be free from large and loose knots.
4. The approach transitions shall be no steeper than 6:1 and constructed as directed by the Engineer.
5. The construction exit foundation course shall be flexible base, bituminous concrete, portland cement concrete or other material as approved by the Engineer.
6. The construction exit should be graded to allow drainage to a sediment trapping device.
7. The guidelines shown hereon are suggestions only and may be modified by the Engineer.

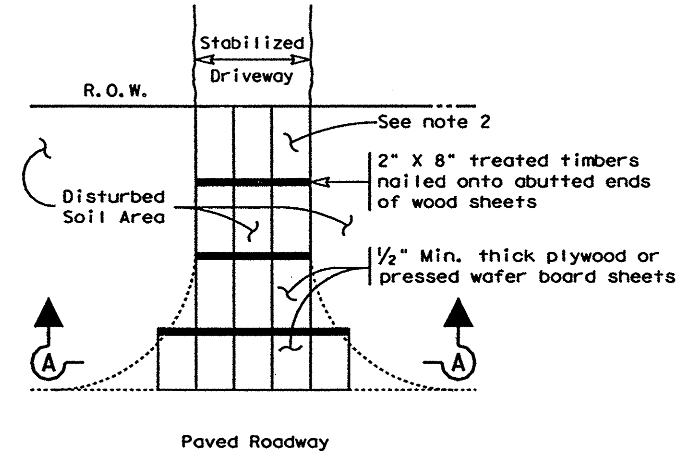

PLAN

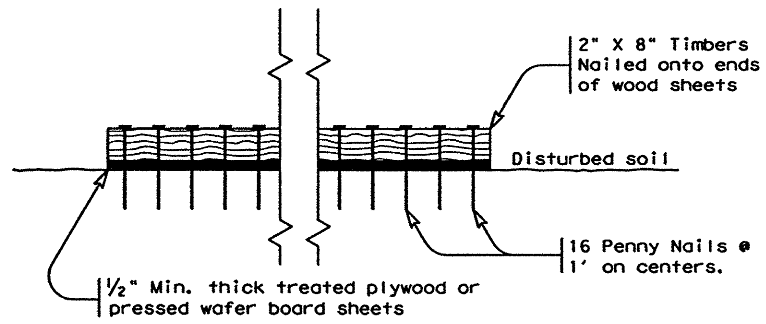

SECTION A-A

CONSTRUCTION EXIT (TYPE 3)

GENERAL NOTES

1. The length of the type 3 construction exit shall be as shown on the plans, or as directed by the Engineer.
2. The type 3 construction exit may be constructed from open graded crushed stone with a size of two to four inches spread a min. of 4" thick to the limits shown on the plans.
3. The treated timber planks shall be #2 grade min., and should be free from large and loose knots.
4. The guidelines shown hereon are suggestions only and may be modified by the Engineer.

DISCLAIMER:
The use of this standard is governed by the "Texas Engineering Practice Act". No warranty of any kind is made by TxDOT for any purpose whatsoever. TxDOT assumes no responsibility for the conversion of this standard to other formats or for incorrect results or damages resulting from its use.

LEVELS DISPLAYED

1		3	4	5	6	7	8	9	10	11	12	13	14	15	16
17	18	19	20	21	22	23	24	25	26	27	28	29	30	31	32
33	34	35	36	37	38	39	40	41	42	43	44	45	46	47	48
49	50	51	52	53	54	55	56	57	58	59	60	61	62	63	

Texas Department of Transportation
Design Division (Roadway)

TEMPORARY EROSION, SEDIMENT AND WATER POLLUTION CONTROL MEASURES

CONSTRUCTION EXITS

EC(3)-93

FILE: ~~EC393.DGN~~	DN: HEJ	CK: HEJ	DW: BGD		CK:
© TxDOT JUNE 1993	DISTRICT	FEDERAL AID PROJECT			SHEET
REVISIONS	22	NH-2002 (79)			881
	COUNTY	CONTROL	SECT	JOB	HIGHWAY
	WEBB	0018	05	062, ETC	IH 35

b34mop36.dgn-01 HOUFILE023 \ncivil\cf0130\ 4/18/2003

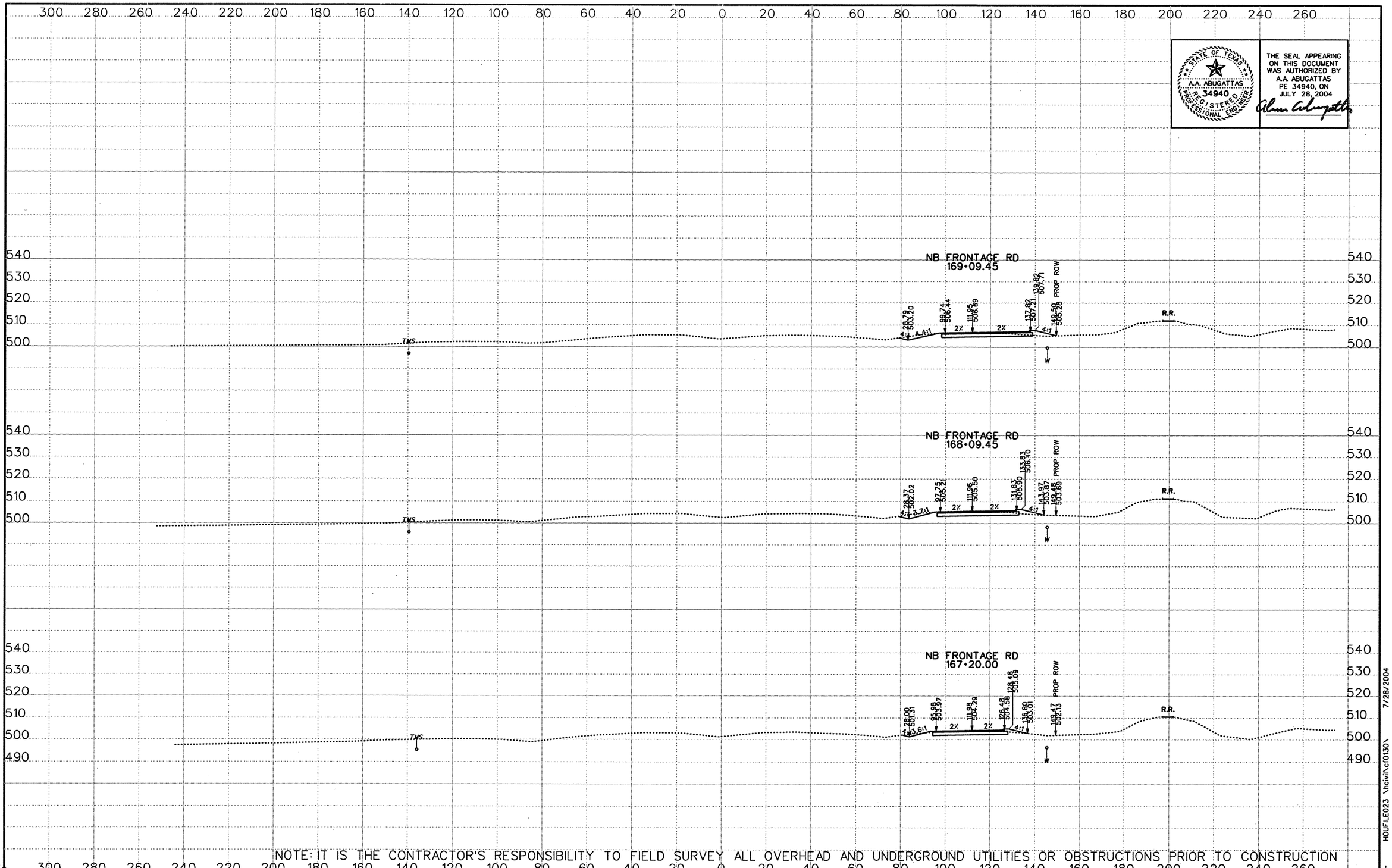

NOTE: IT IS THE CONTRACTOR'S RESPONSIBILITY TO FIELD SURVEY ALL OVERHEAD AND UNDERGROUND UTILITIES OR OBSTRUCTIONS PRIOR TO CONSTRUCTION

STATE OF TEXAS
A.A. ABUGATTAS
34940
REGISTERED PROFESSIONAL ENGINEER

THE SEAL APPEARING ON THIS DOCUMENT WAS AUTHORIZED BY A.A. ABUGATTAS PE 34940, ON JULY 28, 2004

DATE	BY	REV

©2003 Texas Department of Transportation

KBR
Engineered by KBR Technical Services, Inc

SCALE:
1" = 40' HORIZ
1" = 40' VERT
0 1/2 1"

IH 35
LOOP 20 TO UNIROYAL ROAD
PROPOSED CROSS SECTIONS

STATE PROJECT NO			FED RD DIV NO		COUNTY	SHEET 1 OF 104
NH-2002 (79)			6		WEBB	
STATE	DIST NO	CONT	SECT	JOB	HIGHWAY NO	SHEET NO
TEXAS	LAREDO	0018	05	062, ETC	IH 35	882

REF FILE(S): j01xsp01.bdr, bdr LV ON = 5,45,57,60-63

HOUFILE023 \hcivil\c10130\ 7/28/2004

XS ROLL .dgn

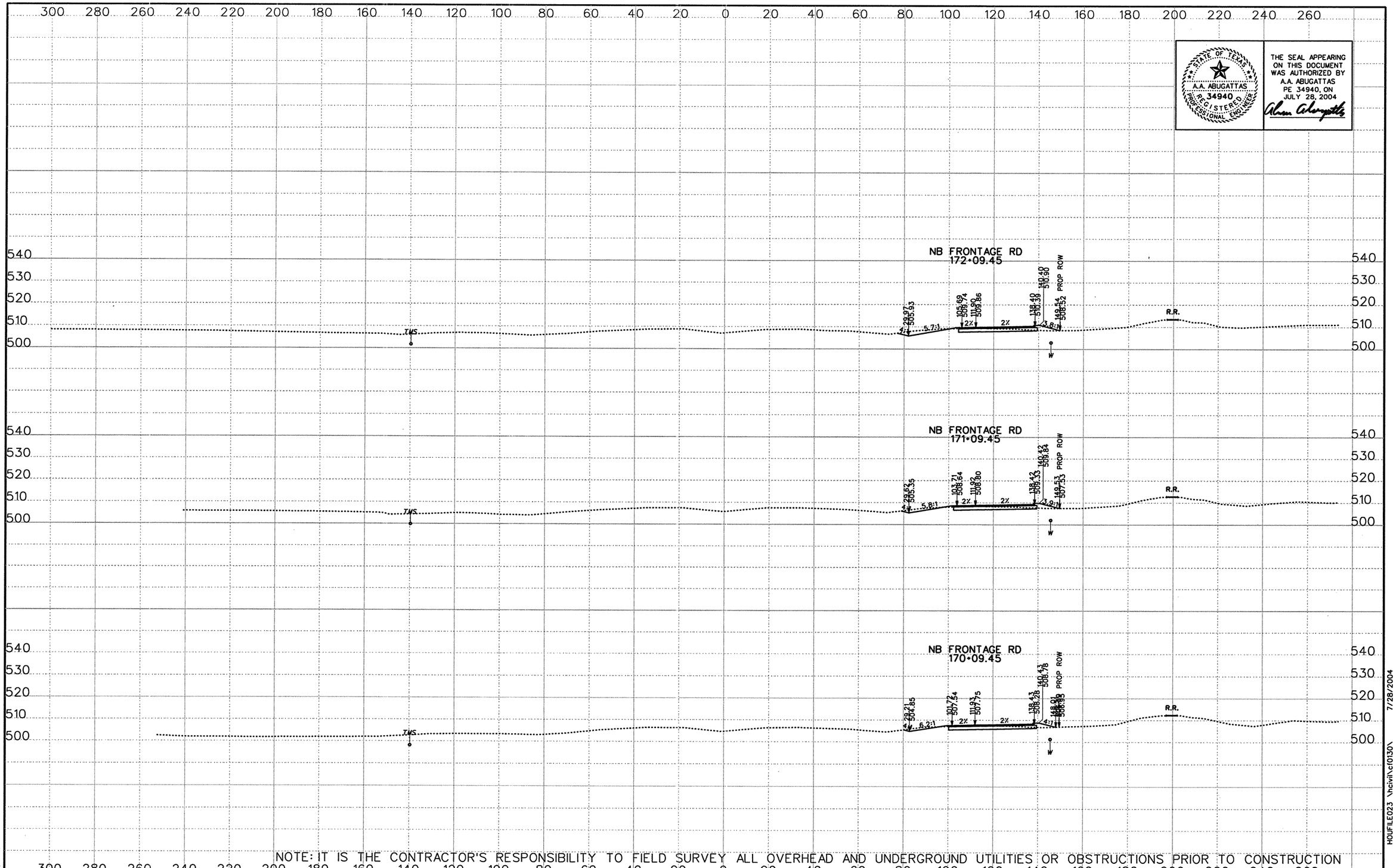

STATE OF TEXAS
A.A. ABUGATTAS
34940
REGISTERED PROFESSIONAL ENGINEER

THE SEAL APPEARING ON THIS DOCUMENT WAS AUTHORIZED BY A.A. ABUGATTAS PE 34940, ON JULY 28, 2004

NOTE: IT IS THE CONTRACTOR'S RESPONSIBILITY TO FIELD SURVEY ALL OVERHEAD AND UNDERGROUND UTILITIES OR OBSTRUCTIONS PRIOR TO CONSTRUCTION

DATE	BY	REV

©2003 Texas Department of Transportation

KBR
Engineered by KBR Technical Services, Inc

SCALE:
1" = 40' HORIZ
1" = 40' VERT
0 ½ 1"

IH 35
LOOP 20 TO UNIROYAL ROAD
PROPOSED CROSS SECTIONS

STATE PROJECT NO			FED RD DIV NO		COUNTY	SHEET 2 OF 104
NH-2002 (79)			6		WEBB	
STATE	DIST NO	CONT	SECT	JOB	HIGHWAY NO	SHEET NO
TEXAS	LAREDO	0018	05	062, ETC	IH 35	883

REF FILE(S): j01xsp01.bdr, bdr LV ON = 5,45,57,60-63

HOUFILE023 \hcivil\c10130\ 7/28/2004 XS ROLL .dgn

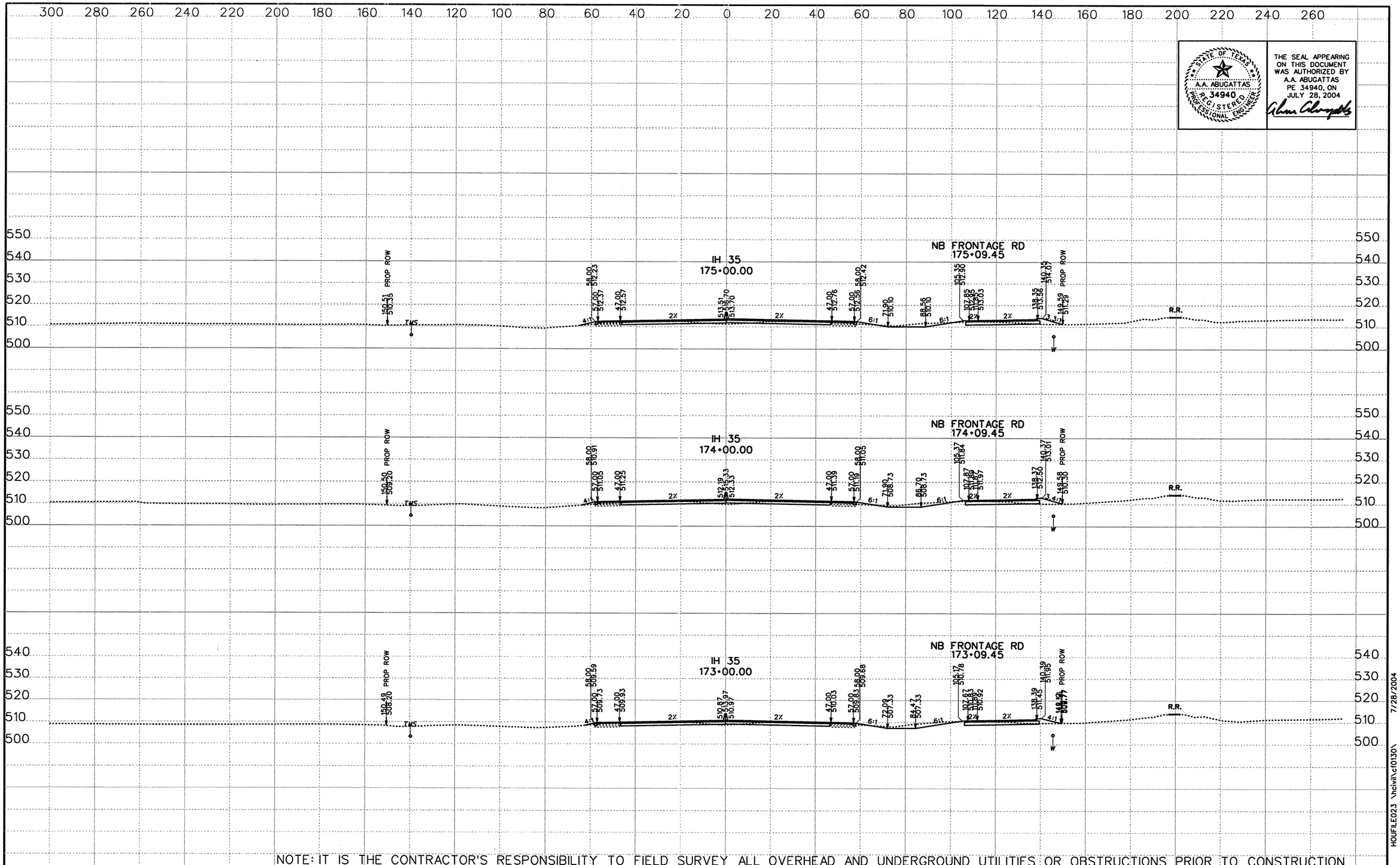

STATE OF TEXAS
A.A. ABUGATTAS
34940
REGISTERED PROFESSIONAL ENGINEER

THE SEAL APPEARING ON THIS DOCUMENT WAS AUTHORIZED BY A.A. ABUGATTAS PE 34940, ON JULY 28, 2004

NOTE: IT IS THE CONTRACTOR'S RESPONSIBILITY TO FIELD SURVEY ALL OVERHEAD AND UNDERGROUND UTILITIES OR OBSTRUCTIONS PRIOR TO CONSTRUCTION

DATE	BY	REV

©2003 Texas Department of Transportation

KBR
Engineered by KBR Technical Services, Inc

SCALE:
1" = 40' HORIZ
1" = 40' VERT
0 1/2 1"

IH 35
LOOP 20 TO UNIROYAL ROAD
PROPOSED CROSS SECTIONS

STATE PROJECT NO			FED RD DIV NO		COUNTY	SHEET 3 OF 104
NH-2002 (79)			6		WEBB	
STATE	DIST NO	CONT	SECT	JOB	HIGHWAY NO	SHEET NO
TEXAS	LAREDO	0018	05	062, ETC	IH 35	884

REF FILE(S): j01xsp01bdr, bdr LV ON = 5,45,57,60-63

HOUFILE023 \hcivil\cf0130\ 7/28/2004

XS ROLL .dgn

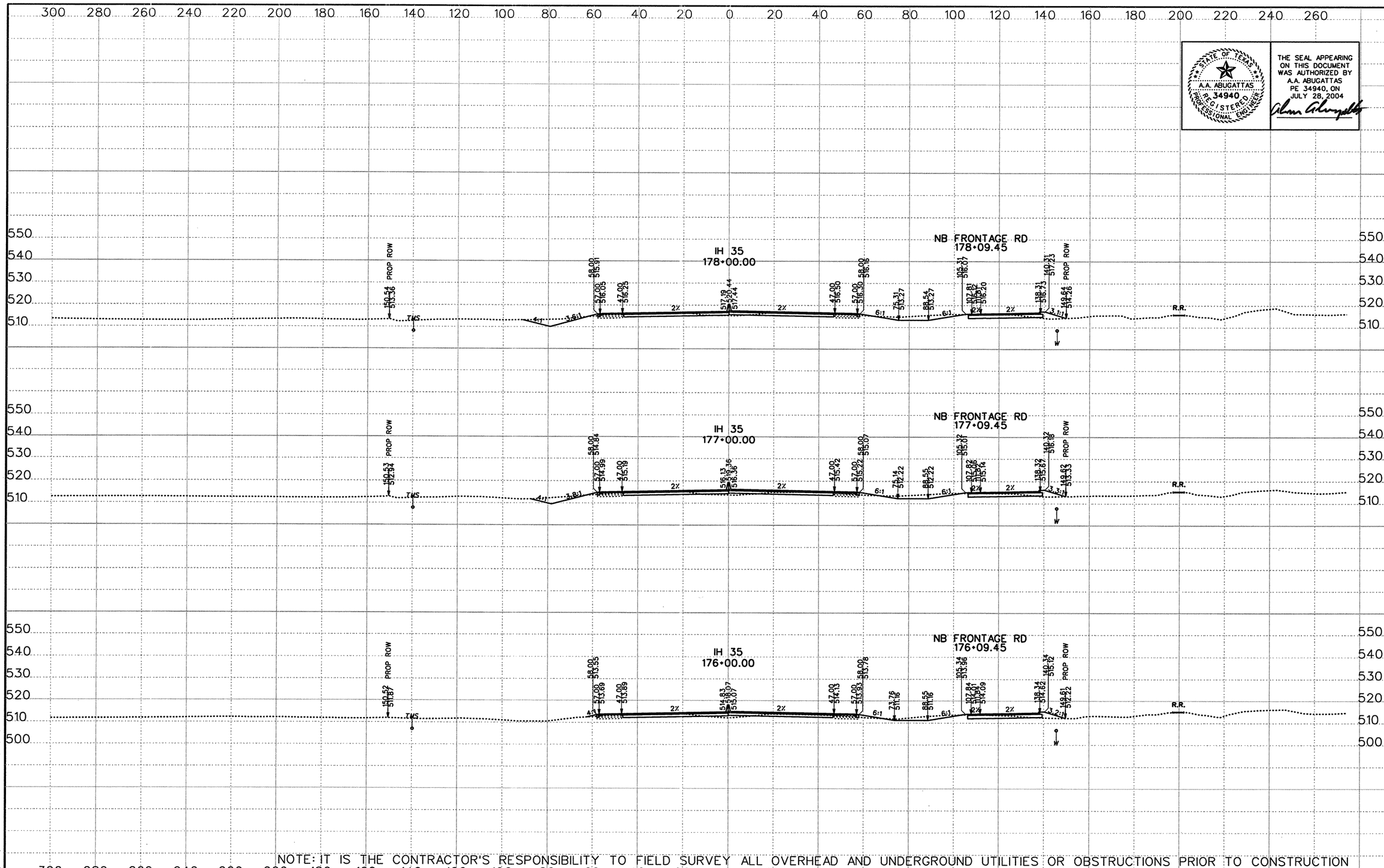

NOTE: IT IS THE CONTRACTOR'S RESPONSIBILITY TO FIELD SURVEY ALL OVERHEAD AND UNDERGROUND UTILITIES OR OBSTRUCTIONS PRIOR TO CONSTRUCTION

THE SEAL APPEARING ON THIS DOCUMENT WAS AUTHORIZED BY A.A. ABUGATTAS PE 34940, ON JULY 28, 2004

STATE OF TEXAS — A.A. ABUGATTAS — R. 34940 — REGISTERED PROFESSIONAL ENGINEER

DATE	BY	REV

©2003 Texas Department of Transportation

KBR
Engineered by KBR Technical Services, Inc

SCALE:
1" = 40' HORIZ
1" = 40' VERT
0 1/2 1"

IH 35
LOOP 20 TO UNIROYAL ROAD
PROPOSED CROSS SECTIONS

STATE PROJECT NO			FED RD DIV NO		COUNTY	SHEET 4 OF 104
NH-2002 (79)			6		WEBB	
STATE	DIST NO	CONT	SECT	JOB	HIGHWAY NO	SHEET NO
TEXAS	LAREDO	0018	05	062, ETC	IH 35	885

REF FILE(S): j01xsp01.bdr, bdr LV ON = 5,45,57,60-63

HOUFILE023 \hcivil\cf0130\ 7/28/2004

XS ROLL .dgn

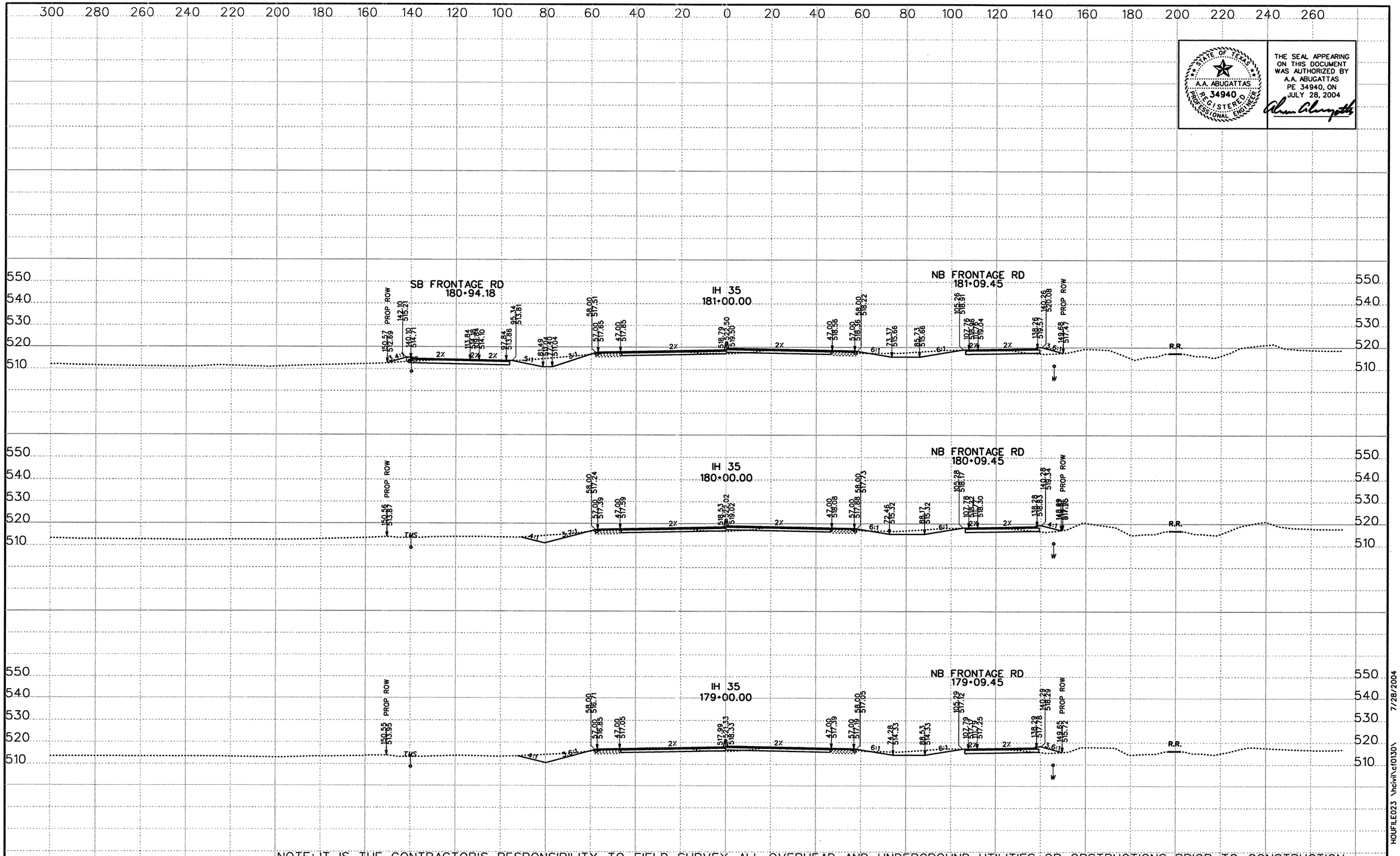

STATE OF TEXAS
A.A. ABUGATTAS
34940
REGISTERED PROFESSIONAL ENGINEER

THE SEAL APPEARING ON THIS DOCUMENT WAS AUTHORIZED BY A.A. ABUGATTAS PE 34940, ON JULY 28, 2004

NOTE: IT IS THE CONTRACTOR'S RESPONSIBILITY TO FIELD SURVEY ALL OVERHEAD AND UNDERGROUND UTILITIES OR OBSTRUCTIONS PRIOR TO CONSTRUCTION

DATE	BY	REV

©2003 Texas Department of Transportation

KBR
Engineered by KBR Technical Services, Inc

SCALE:
1" = 40' HORIZ
1" = 40' VERT
0 ½ 1"

IH 35
LOOP 20 TO UNIROYAL ROAD
PROPOSED CROSS SECTIONS

STATE PROJECT NO			FED RD DIV NO		COUNTY	SHEET 5 OF 104
NH-2002 (79)			6		WEBB	
STATE	DIST NO	CONT	SECT	JOB	HIGHWAY NO	SHEET NO
TEXAS	LAREDO	0018	05	062, ETC	IH 35	886

REF FILE(S): j01xsp01.bdr, bdr LV ON = 5,45,57,60-63

XS ROLL .dgn- HOUFILE023 \hcwilvcf0130\ 7/28/2004

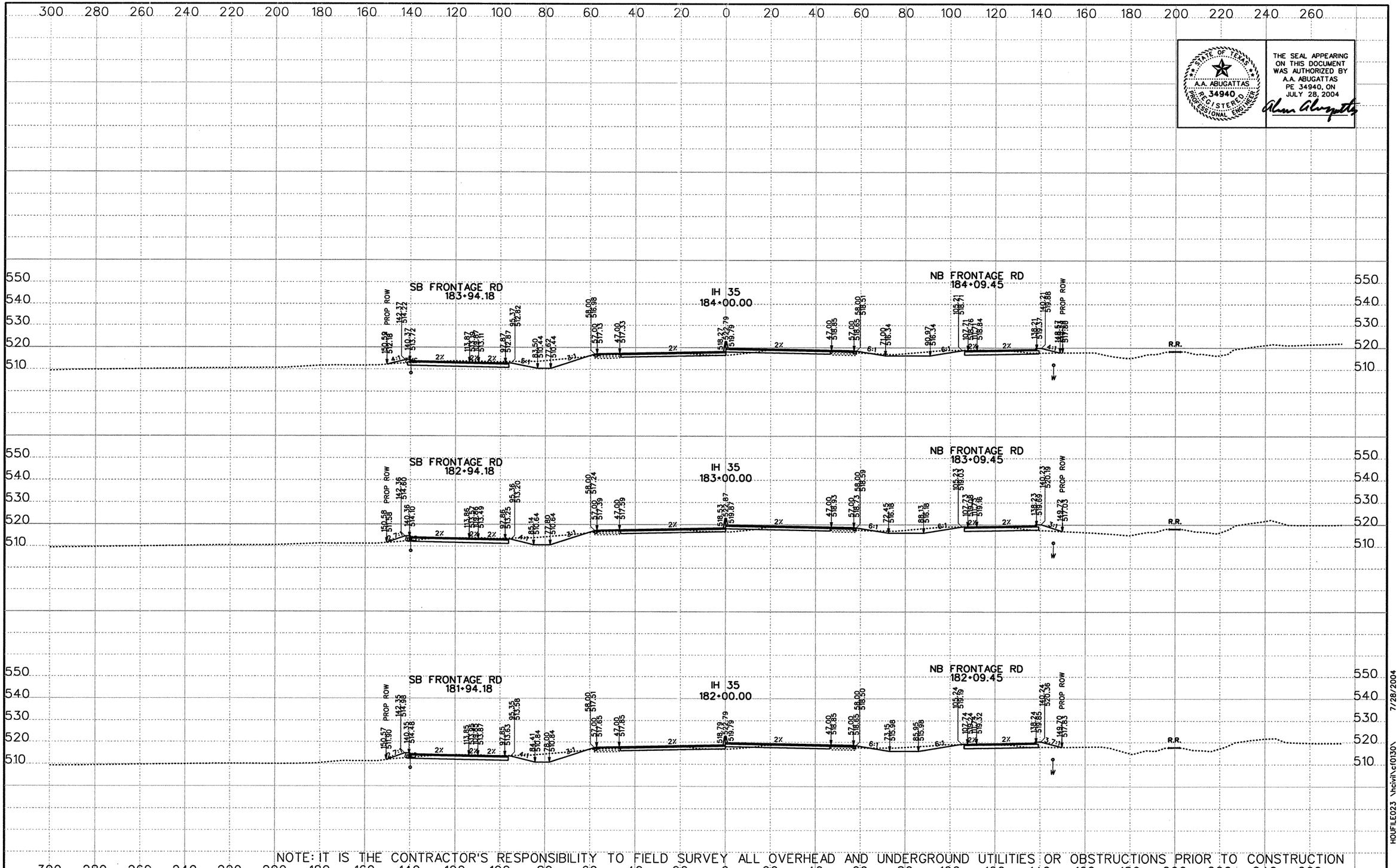

STATE OF TEXAS
A.A. ABUGATTAS
P. 34940
REGISTERED PROFESSIONAL ENGINEER

THE SEAL APPEARING ON THIS DOCUMENT WAS AUTHORIZED BY A.A. ABUGATTAS PE 34940, ON JULY 28, 2004

NOTE: IT IS THE CONTRACTOR'S RESPONSIBILITY TO FIELD SURVEY ALL OVERHEAD AND UNDERGROUND UTILITIES OR OBSTRUCTIONS PRIOR TO CONSTRUCTION

DATE	BY	REV

©2003 Texas Department of Transportation

KBR
Engineered by KBR Technical Services, Inc

SCALE:
1" = 40' HORIZ
1" = 40' VERT
0 ½ 1"

IH 35
LOOP 20 TO UNIROYAL ROAD
PROPOSED CROSS SECTIONS

STATE PROJECT NO			FED RD DIV NO		COUNTY	SHEET 6 OF 104
NH-2002 (79)			6		WEBB	
STATE	DIST NO	CONT	SECT	JOB	HIGHWAY NO	SHEET NO
TEXAS	LAREDO	0018	05	062, ETC	IH 35	887

REF FILE(S): j01xsp01.bdr, bdr LV ON = 5,45,57,60-63

HOUFILE023 \hcivil\cf0130\ 7/28/2004

XS ROLL .dgn-

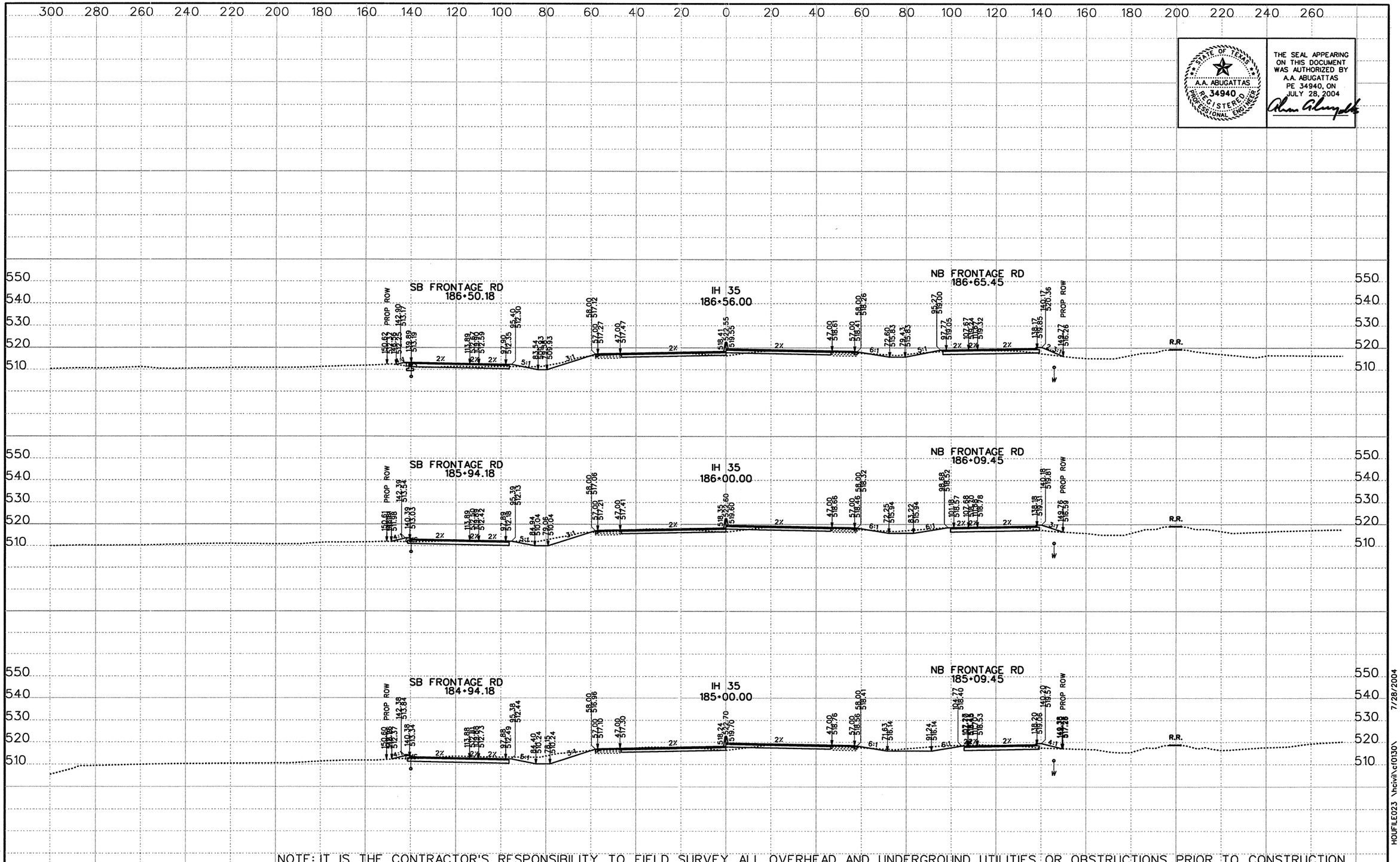

NOTE: IT IS THE CONTRACTOR'S RESPONSIBILITY TO FIELD SURVEY ALL OVERHEAD AND UNDERGROUND UTILITIES OR OBSTRUCTIONS PRIOR TO CONSTRUCTION

STATE OF TEXAS
A.A. ABUGATTAS
PE 34940
REGISTERED PROFESSIONAL ENGINEER

THE SEAL APPEARING ON THIS DOCUMENT WAS AUTHORIZED BY A.A. ABUGATTAS PE 34940, ON JULY 28, 2004

DATE	BY	REV

©2003 Texas Department of Transportation

KBR
Engineered by KBR Technical Services, Inc

SCALE:
1" = 40' HORIZ
1" = 40' VERT
0 1/2 1"

IH 35
LOOP 20 TO UNIROYAL ROAD
PROPOSED CROSS SECTIONS

STATE PROJECT NO			FED RD DIV NO		COUNTY	SHEET 7 OF 104
NH-2002 (79)			6		WEBB	
STATE	DIST NO	CONT	SECT	JOB	HIGHWAY NO	SHEET NO
TEXAS	LAREDO	0018	05	062, ETC	IH 35	888

REF FILE(S): j01xsp01.bdr, bdr LV ON = 5,45,57,60-63

XS ROLL .dgn- HOUFILE023 \hcivil\cf0130\ 7/28/2004

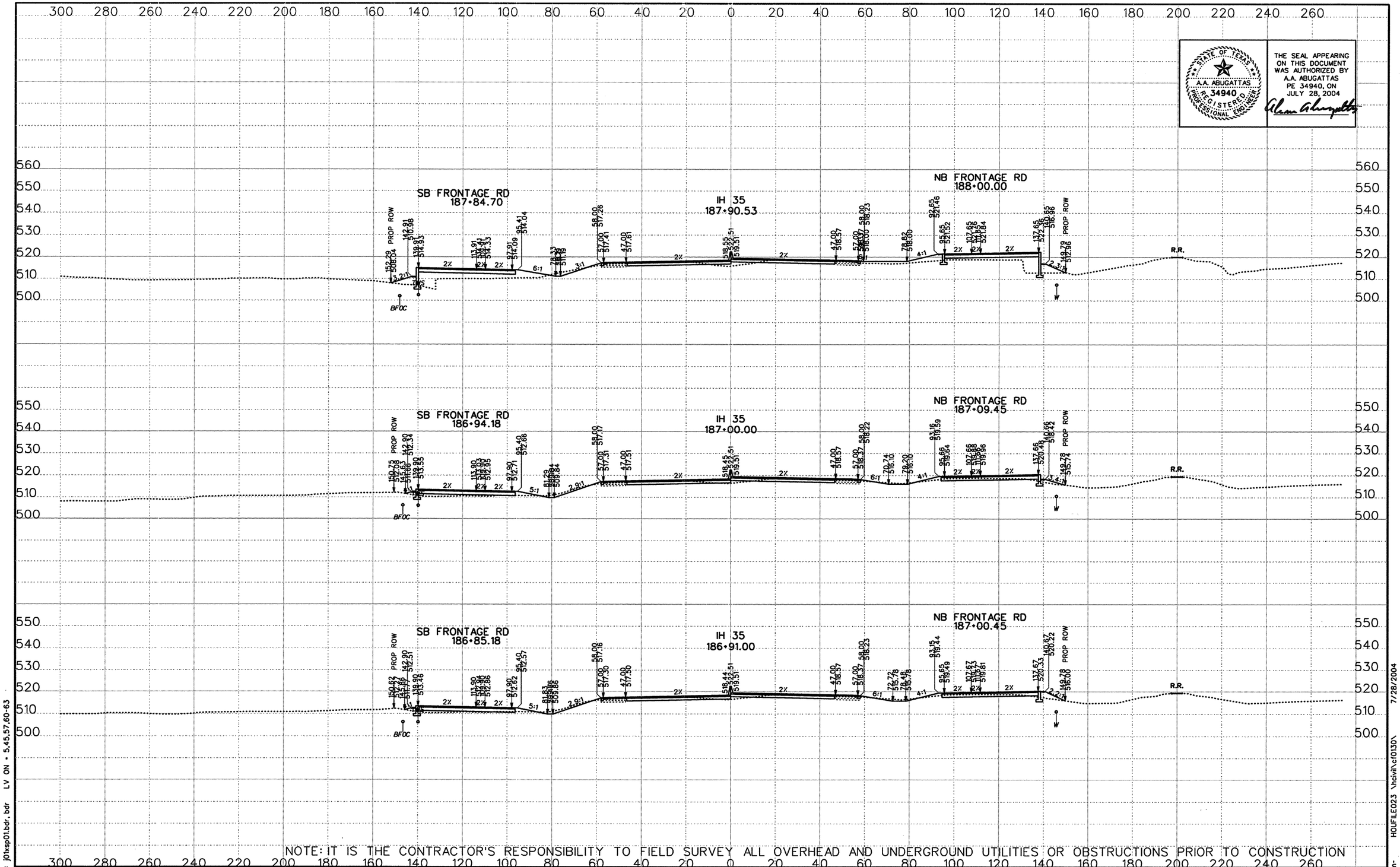

NOTE: IT IS THE CONTRACTOR'S RESPONSIBILITY TO FIELD SURVEY ALL OVERHEAD AND UNDERGROUND UTILITIES OR OBSTRUCTIONS PRIOR TO CONSTRUCTION

DATE	BY	REV

©2003 Texas Department of Transportation

KBR
Engineered by KBR Technical Services, Inc

SCALE:
1" = 40' HORIZ
1" = 40' VERT
0 ½ 1"

IH 35
LOOP 20 TO UNIROYAL ROAD
PROPOSED CROSS SECTIONS

STATE PROJECT NO			FED RD DIV NO		COUNTY	SHEET 8 OF 104
NH-2002 (79)			6		WEBB	
STATE	DIST NO	CONT	SECT	JOB	HIGHWAY NO	SHEET NO
TEXAS	LAREDO	0018	05	062, ETC	IH 35	889

REF FILE(S): j01xsp01.bdr, bdr LV ON = 5,45,57,60-63

XS ROLL .dgn- HOUFILE023 \hcivil\c0130\ 7/28/2004

STATE OF TEXAS
A.A. ABUGATTAS
34940
REGISTERED PROFESSIONAL ENGINEER

THE SEAL APPEARING ON THIS DOCUMENT WAS AUTHORIZED BY A.A. ABUGATTAS PE 34940, ON JULY 28, 2004

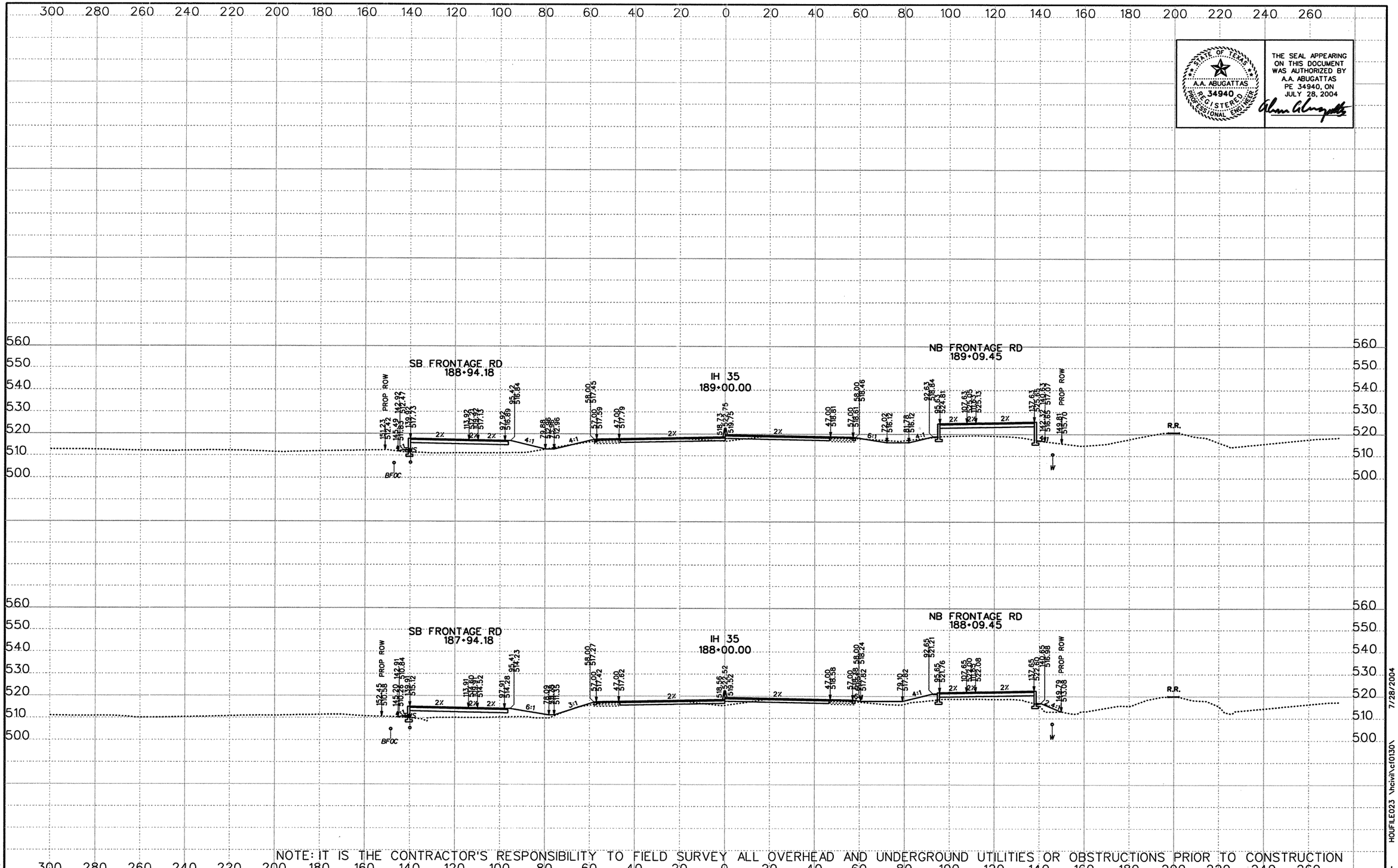

NOTE: IT IS THE CONTRACTOR'S RESPONSIBILITY TO FIELD SURVEY ALL OVERHEAD AND UNDERGROUND UTILITIES OR OBSTRUCTIONS PRIOR TO CONSTRUCTION

DATE	BY	REV

©2003 Texas Department of Transportation

KBR
Engineered by KBR Technical Services, Inc

SCALE:
1" = 40' HORIZ
1" = 40' VERT
0 1/2 1"

IH 35
LOOP 20 TO UNIROYAL ROAD
PROPOSED CROSS SECTIONS

STATE PROJECT NO			FED RD DIV NO		COUNTY	SHEET 9 OF 104
NH-2002 (79)			6		WEBB	
STATE	DIST NO	CONT	SECT	JOB	HIGHWAY NO	SHEET NO
TEXAS	LAREDO	0018	05	062, ETC	IH 35	890

REF FILE(S): j01xsp01.bdr, bdr LV ON = 5,45,57,60-63

HOUFILE023 \hcivil\cf0130\ 7/28/2004

XS ROLL .dgn-

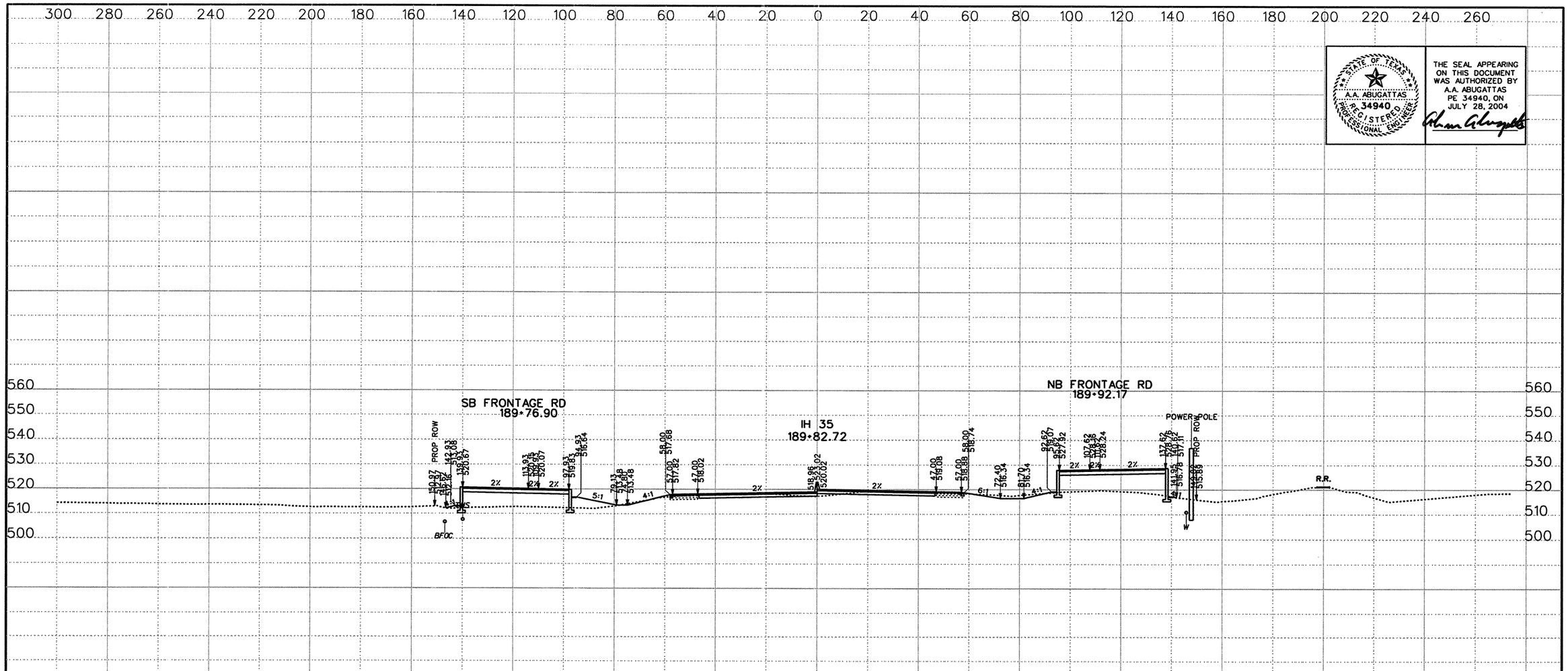

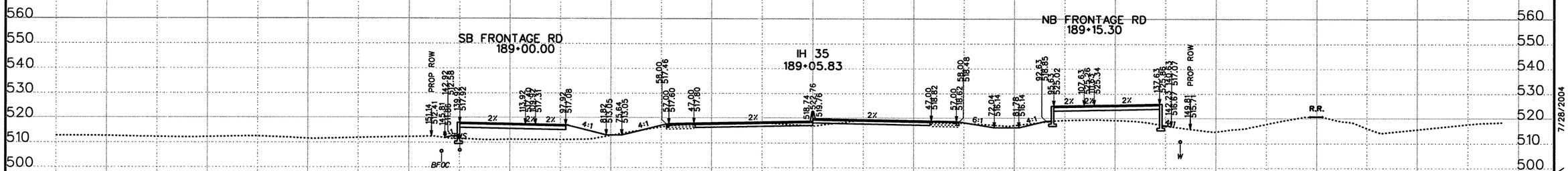

STATE OF TEXAS
A.A. ABUGATTAS
PE 34940
REGISTERED PROFESSIONAL ENGINEER

THE SEAL APPEARING ON THIS DOCUMENT WAS AUTHORIZED BY A.A. ABUGATTAS PE 34940, ON JULY 28, 2004

NOTE: IT IS THE CONTRACTOR'S RESPONSIBILITY TO FIELD SURVEY ALL OVERHEAD AND UNDERGROUND UTILITIES OR OBSTRUCTIONS PRIOR TO CONSTRUCTION

DATE	BY	REV

©2003 Texas Department of Transportation

KBR
Engineered by KBR Technical Services, Inc

SCALE:
1" = 40' HORIZ
1" = 40' VERT
0 ½ 1"

IH 35
LOOP 20 TO UNIROYAL ROAD
PROPOSED CROSS SECTIONS

STATE PROJECT NO			FED RD DIV NO		COUNTY	SHEET 10 OF 104
NH-2002 (79)			6		WEBB	
STATE	DIST NO	CONT	SECT	JOB	HIGHWAY NO	SHEET NO
TEXAS	LAREDO	0018	05	062, ETC	IH 35	891

REF FILE(S): j01xsp01.bdr, bdr LV ON = 5,45,57,60-63

HOUFILE023 \hcivil\c10130\ 7/28/2004

XS ROLL .dgn-

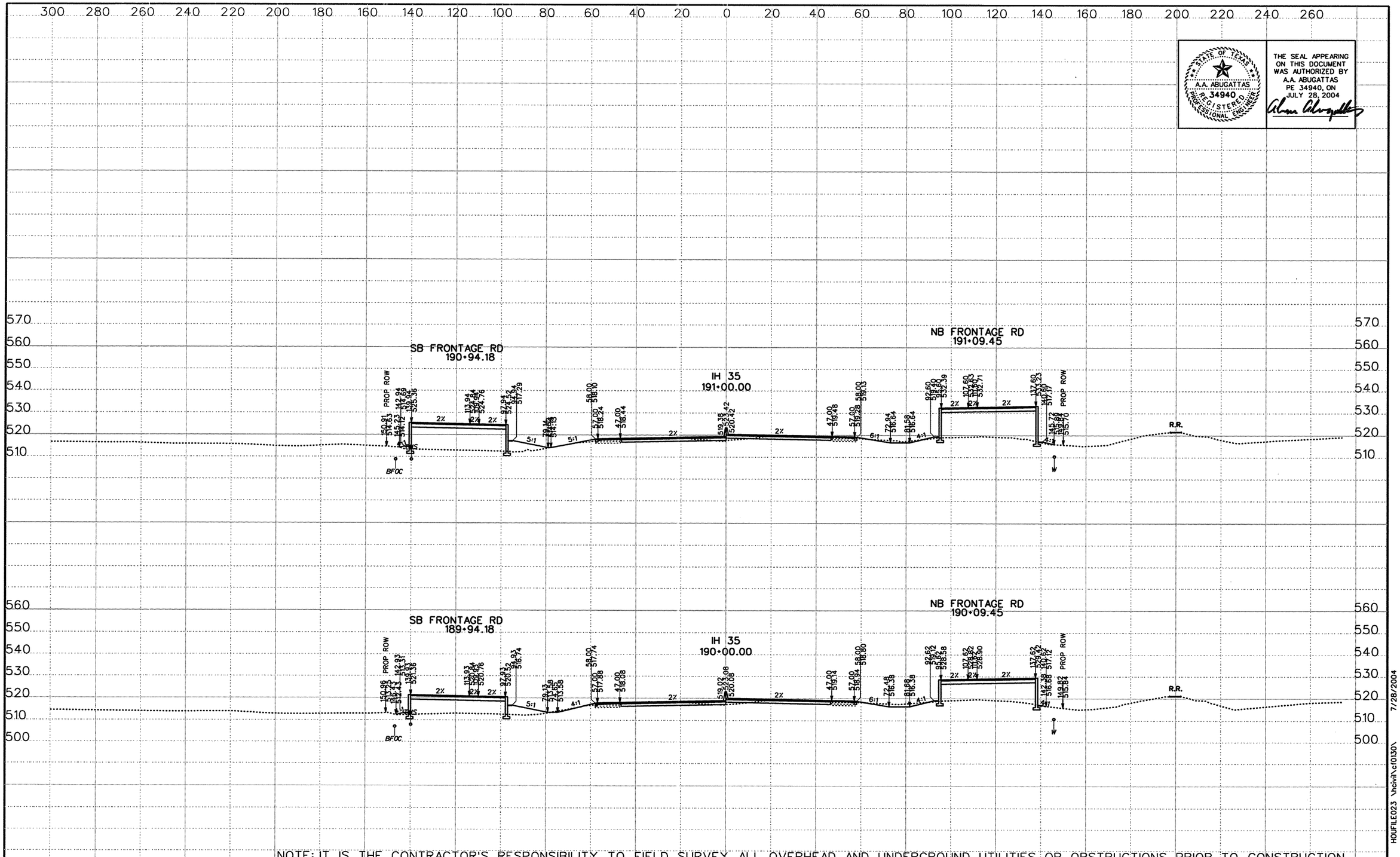

STATE OF TEXAS
A.A. ABUGATTAS
NO. 34940
REGISTERED PROFESSIONAL ENGINEER

THE SEAL APPEARING ON THIS DOCUMENT WAS AUTHORIZED BY A.A. ABUGATTAS PE 34940, ON JULY 28, 2004

NOTE: IT IS THE CONTRACTOR'S RESPONSIBILITY TO FIELD SURVEY ALL OVERHEAD AND UNDERGROUND UTILITIES OR OBSTRUCTIONS PRIOR TO CONSTRUCTION

DATE	BY	REV

©2003 Texas Department of Transportation

KBR
Engineered by KBR Technical Services, Inc

SCALE:
1" = 40' HORIZ
1" = 40' VERT
0 1/2 1"

IH 35
LOOP 20 TO UNIROYAL ROAD
PROPOSED CROSS SECTIONS

STATE PROJECT NO			FED RD DIV NO		COUNTY	SHEET 11 OF 104
NH-2002 (79)			6		WEBB	
STATE	DIST NO	CONT	SECT	JOB	HIGHWAY NO	SHEET NO
TEXAS	LAREDO	0018	05	062, ETC	IH 35	892

REF FILE(S): j01xsp01.bdr, bdr LV ON = 5,45,57,60-63

XS ROLL -dgn- HOUFILE023 \hcivil\cf0130\ 7/28/2004

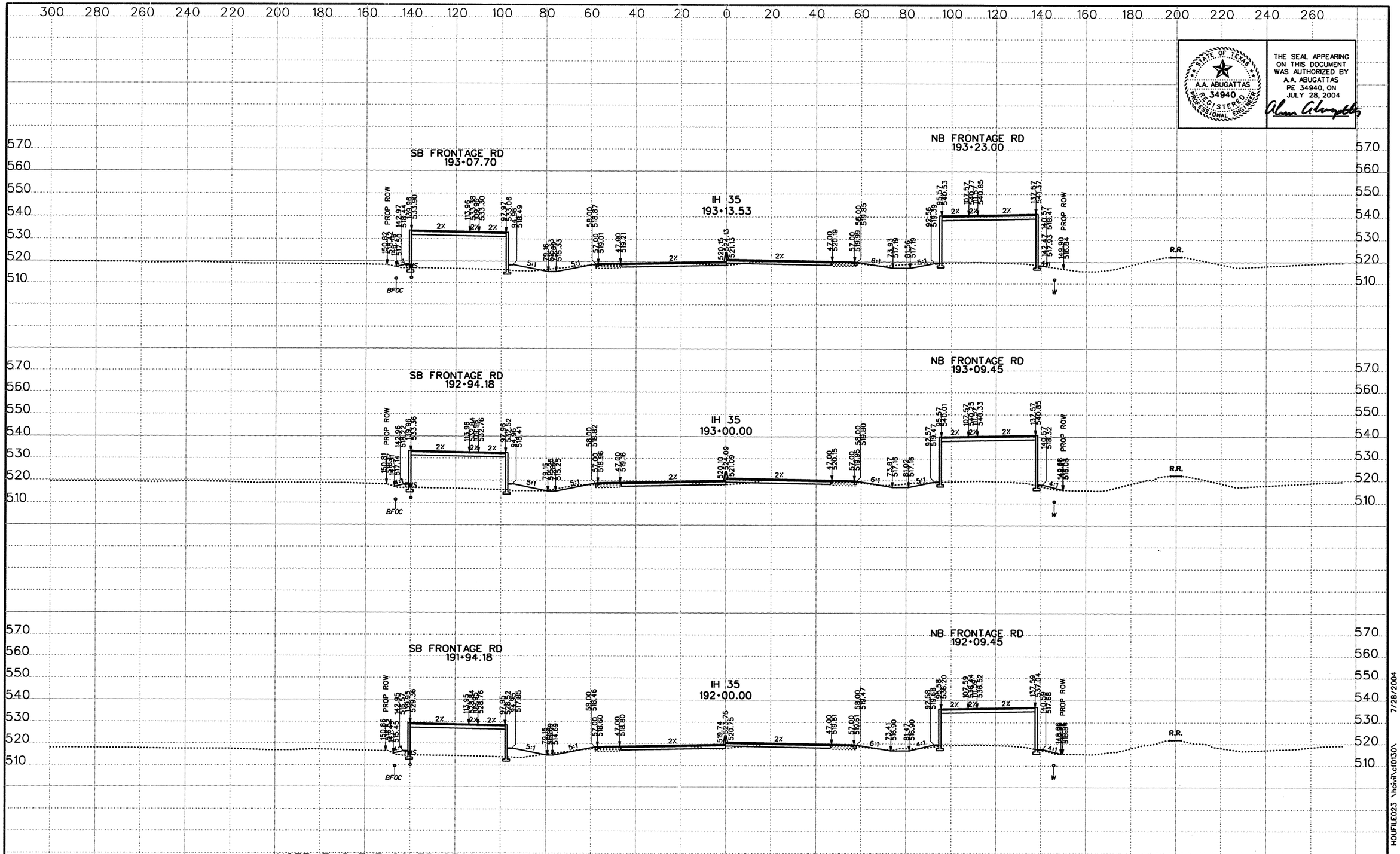

NOTE: IT IS THE CONTRACTOR'S RESPONSIBILITY TO FIELD SURVEY ALL OVERHEAD AND UNDERGROUND UTILITIES OR OBSTRUCTIONS PRIOR TO CONSTRUCTION

STATE OF TEXAS
A.A. ABUGATTAS
PE 34940
REGISTERED PROFESSIONAL ENGINEER

THE SEAL APPEARING ON THIS DOCUMENT WAS AUTHORIZED BY A.A. ABUGATTAS PE 34940, ON JULY 28, 2004

DATE	BY	REV

©2003 Texas Department of Transportation

KBR
Engineered by KBR Technical Services, Inc

SCALE:
1" = 40' HORIZ
1" = 40' VERT
0 1/2 1"

IH 35
LOOP 20 TO UNIROYAL ROAD
PROPOSED CROSS SECTIONS

STATE PROJECT NO			FED RD DIV NO		COUNTY	SHEET 12 OF 104
NH-2002 (79)			6		WEBB	
STATE	DIST NO	CONT	SECT	JOB	HIGHWAY NO	SHEET NO
TEXAS	LAREDO	0018	05	062, ETC	IH 35	893

REF FILE(S): j01xsp01.bdr, bdr LV ON = 5,45,57,60-63

HOUFILE023 \hcivil\cf0130\ 7/28/2004

XS ROLL .dgn-

STATE OF TEXAS
A.A. ABUGATTAS
34940
REGISTERED PROFESSIONAL ENGINEER

THE SEAL APPEARING ON THIS DOCUMENT WAS AUTHORIZED BY A.A. ABUGATTAS PE 34940, ON JULY 28, 2004

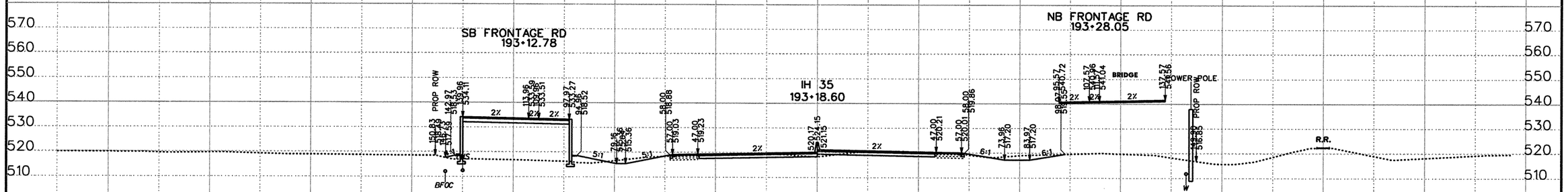

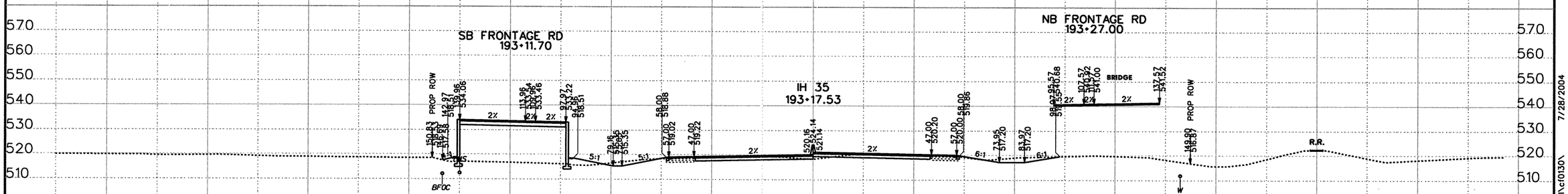

NOTE: IT IS THE CONTRACTOR'S RESPONSIBILITY TO FIELD SURVEY ALL OVERHEAD AND UNDERGROUND UTILITIES OR OBSTRUCTIONS PRIOR TO CONSTRUCTION

DATE	BY	REV

©2003 Texas Department of Transportation

KBR
Engineered by KBR Technical Services, Inc

SCALE:
1" = 40' HORIZ
1" = 40' VERT
0 1/2 1"

IH 35
LOOP 20 TO UNIROYAL ROAD
PROPOSED CROSS SECTIONS

STATE PROJECT NO			FED RD DIV NO		COUNTY	SHEET 13 OF 104
NH-2002 (79)			6		WEBB	
STATE	DIST NO	CONT	SECT	JOB	HIGHWAY NO	SHEET NO
TEXAS	LAREDO	0018	05	062, ETC	IH 35	894

REF FILE(S): j0txsp01.bdr, bdr LV ON = 5,45,57,60-63

XS ROLL .dgn- HOUFILE023 \hcivil\cf0130\ 7/28/2004

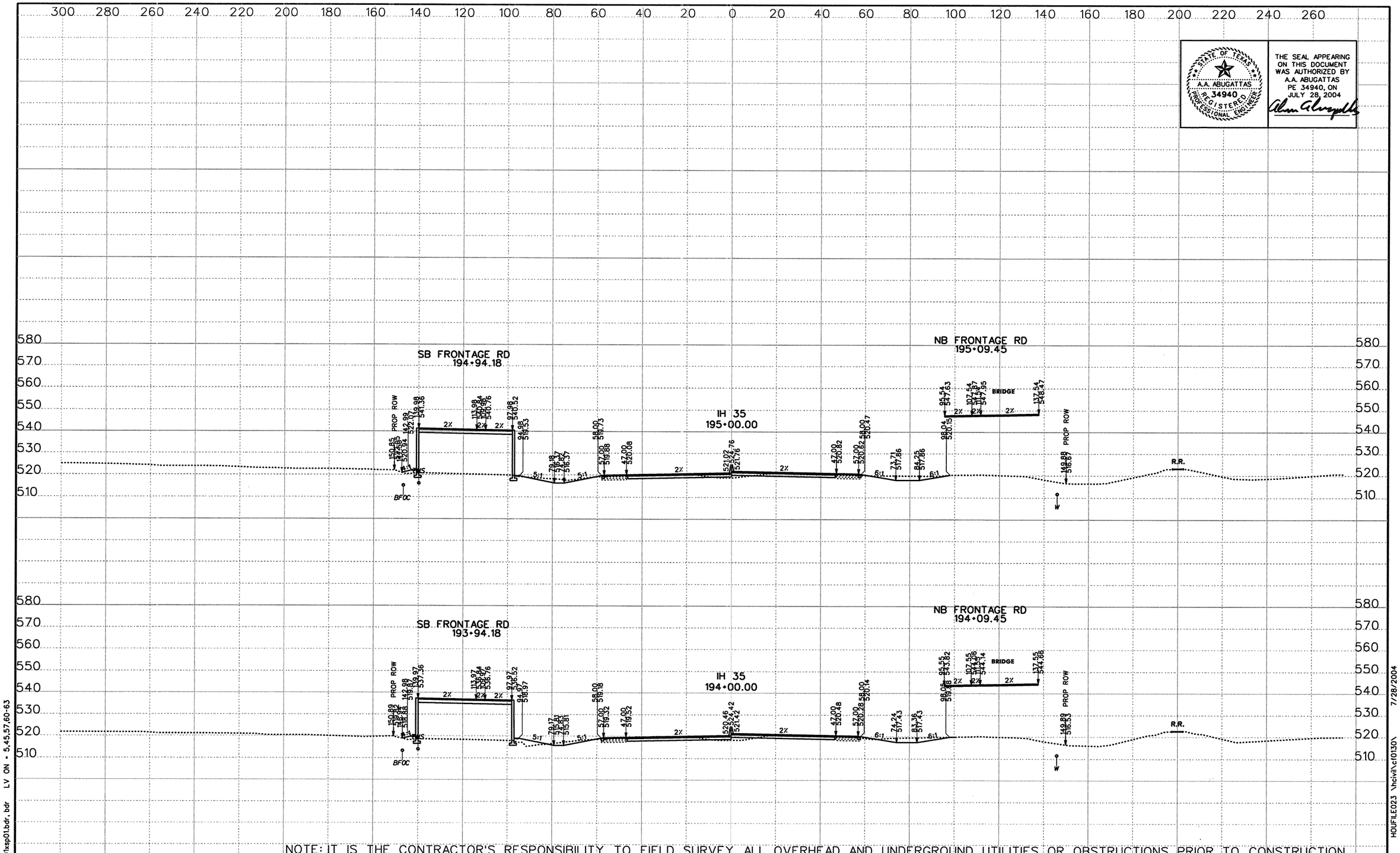

STATE OF TEXAS
A.A. ABUGATTAS
34940
REGISTERED PROFESSIONAL ENGINEER

THE SEAL APPEARING ON THIS DOCUMENT WAS AUTHORIZED BY A.A. ABUGATTAS PE 34940, ON JULY 28, 2004

NOTE: IT IS THE CONTRACTOR'S RESPONSIBILITY TO FIELD SURVEY ALL OVERHEAD AND UNDERGROUND UTILITIES OR OBSTRUCTIONS PRIOR TO CONSTRUCTION

DATE	BY	REV

©2003 Texas Department of Transportation

KBR
Engineered by KBR Technical Services, Inc

SCALE:
1" = 40' HORIZ
1" = 40' VERT
0 1/2 1"

IH 35
LOOP 20 TO UNIROYAL ROAD
PROPOSED CROSS SECTIONS

STATE PROJECT NO			FED RD DIV NO		COUNTY	SHEET 14 OF 104
NH-2002 (79)			6		WEBB	
STATE	DIST NO	CONT	SECT	JOB	HIGHWAY NO	SHEET NO
TEXAS	LAREDO	0018	05	062, ETC	IH 35	895

REF FILE(S): j01xsp01.bdr, bdr LV ON = 5,45,57,60-63

XS ROLL .dgn- HOUFILE023 \hcivil\cf0130\ 7/28/2004

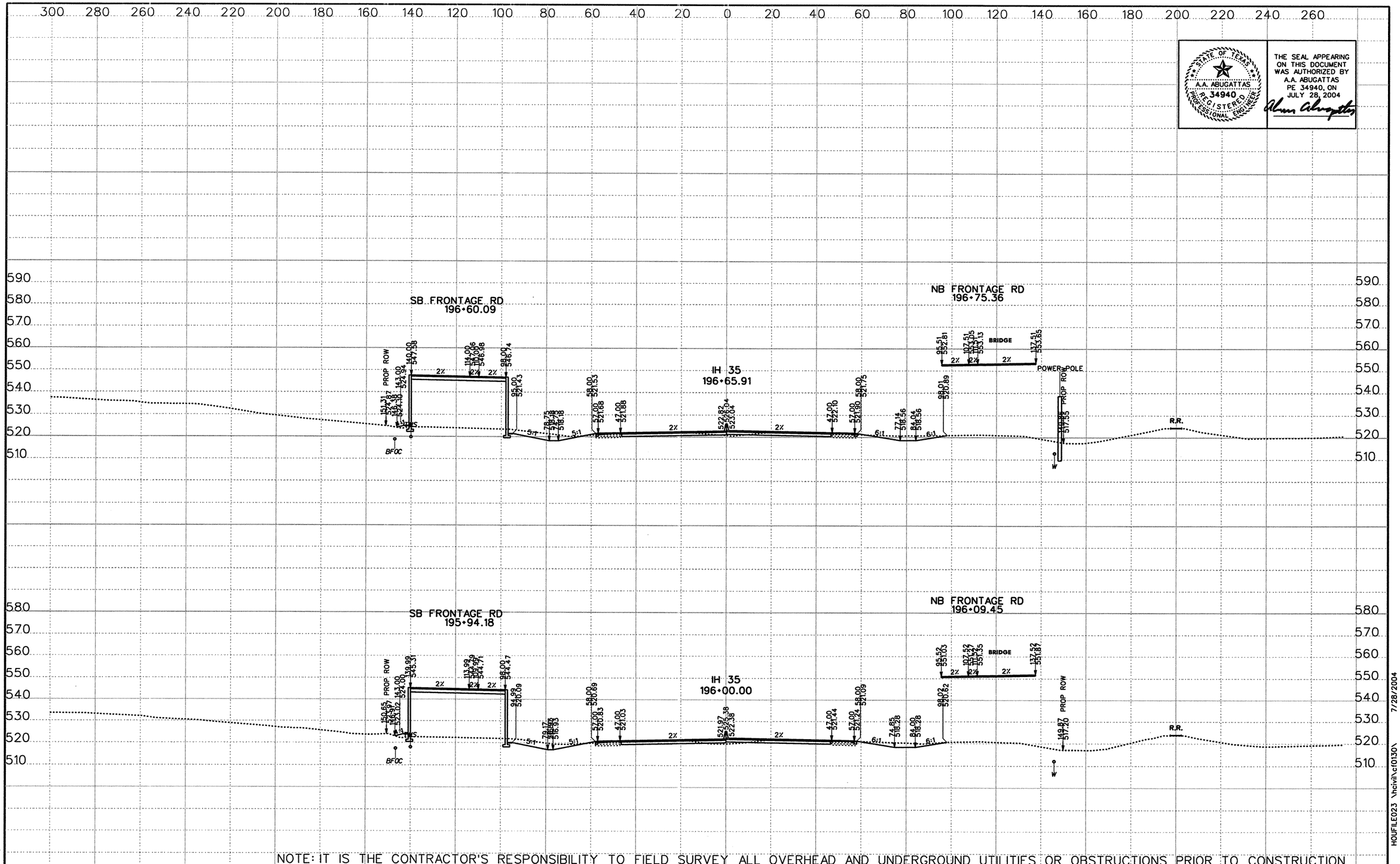

NOTE: IT IS THE CONTRACTOR'S RESPONSIBILITY TO FIELD SURVEY ALL OVERHEAD AND UNDERGROUND UTILITIES OR OBSTRUCTIONS PRIOR TO CONSTRUCTION

THE SEAL APPEARING ON THIS DOCUMENT WAS AUTHORIZED BY A.A. ABUGATTAS PE 34940, ON JULY 28, 2004

STATE OF TEXAS — A.A. ABUGATTAS — 34940 — REGISTERED PROFESSIONAL ENGINEER

DATE	BY	REV

©2003 Texas Department of Transportation

KBR
Engineered by KBR Technical Services, Inc

SCALE:
1" = 40' HORIZ
1" = 40' VERT
0 1/2 1"

IH 35
LOOP 20 TO UNIROYAL ROAD
PROPOSED CROSS SECTIONS

STATE PROJECT NO			FED RD DIV NO		COUNTY	SHEET 15 OF 104
NH-2002 (79)			6		WEBB	
STATE	DIST NO	CONT	SECT	JOB	HIGHWAY NO	SHEET NO
TEXAS	LAREDO	0018	05	062, ETC	IH 35	896

REF FILE(S): j01xsp01.bdr, bdr LV ON = 5,45,57,60-63

XS ROLL .dgn- HOUFILE023 \hcivil\c0130\ 7/28/2004

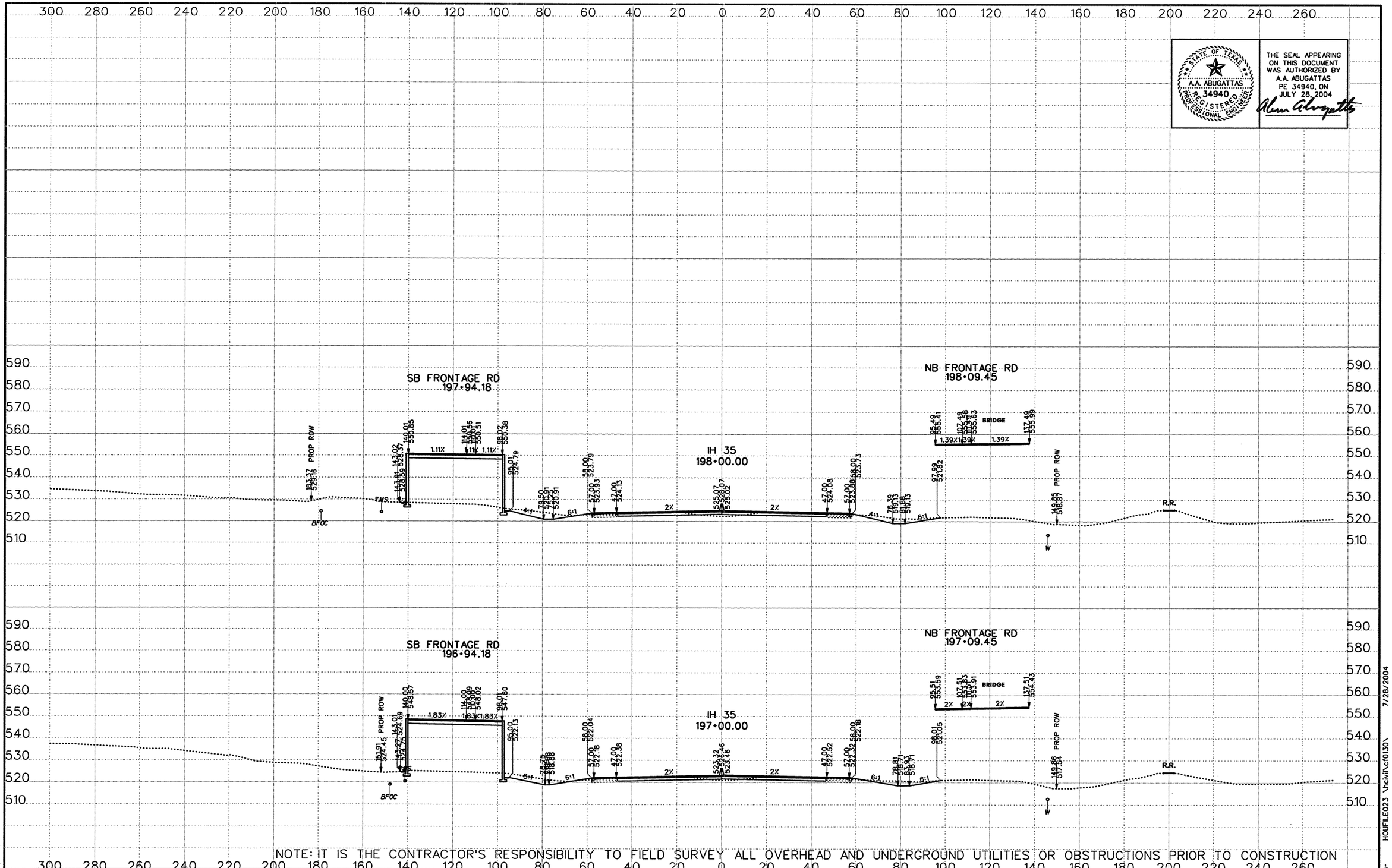

STATE OF TEXAS
A.A. ABUGATTAS
P.E. 34940
REGISTERED PROFESSIONAL ENGINEER

THE SEAL APPEARING ON THIS DOCUMENT WAS AUTHORIZED BY A.A. ABUGATTAS PE 34940, ON JULY 28, 2004

NOTE: IT IS THE CONTRACTOR'S RESPONSIBILITY TO FIELD SURVEY ALL OVERHEAD AND UNDERGROUND UTILITIES OR OBSTRUCTIONS PRIOR TO CONSTRUCTION

DATE	BY	REV

©2003 Texas Department of Transportation

KBR
Engineered by KBR Technical Services, Inc

SCALE:
1" = 40' HORIZ
1" = 40' VERT
0 1/2 1"

IH 35
LOOP 20 TO UNIROYAL ROAD
PROPOSED CROSS SECTIONS

STATE PROJECT NO			FED RD DIV NO		COUNTY	SHEET 16 OF 104
NH-2002 (79)			6		WEBB	
STATE	DIST NO	CONT	SECT	JOB	HIGHWAY NO	SHEET NO
TEXAS	LAREDO	0018	05	062, ETC	IH 35	897

REF FILE(S): j01xsp01.bdr, bdr LV ON = 5,45,57,60-63

HOUFILE023 \hcivil\cf0130\ 7/28/2004

XS ROLL .dgn-

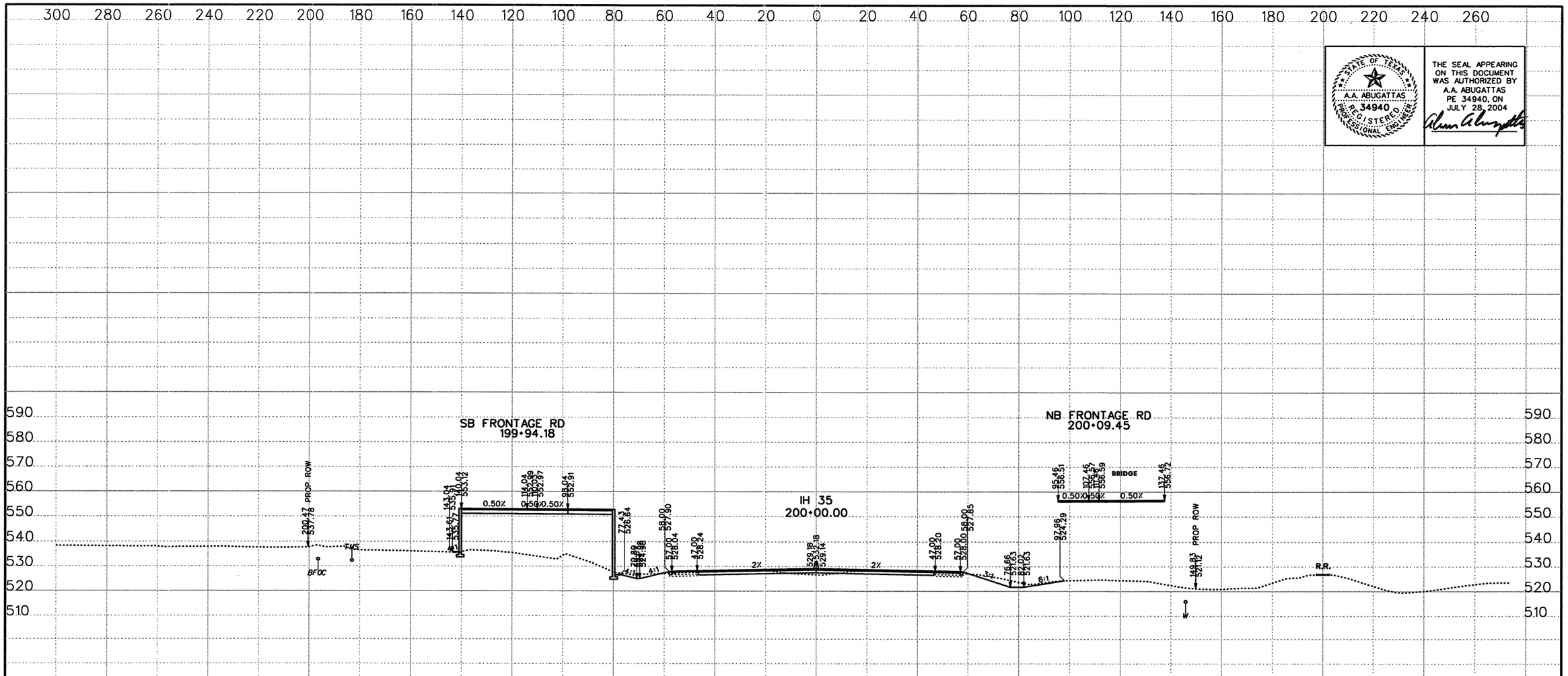

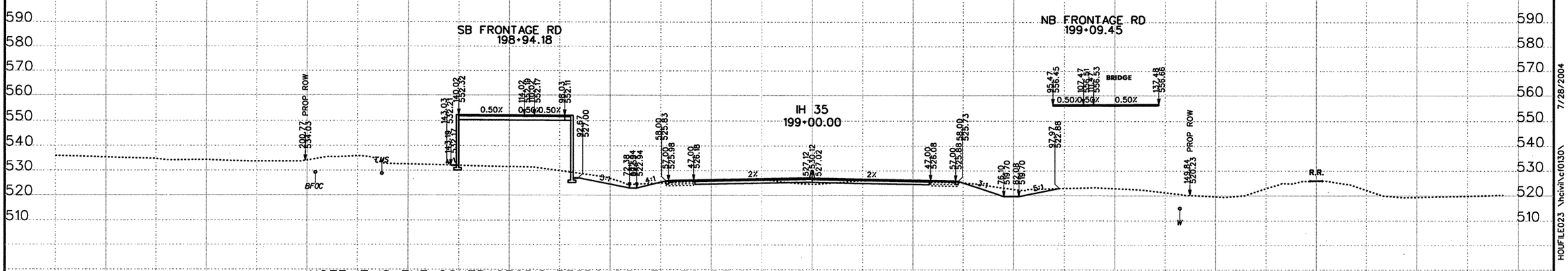

THE SEAL APPEARING ON THIS DOCUMENT WAS AUTHORIZED BY A.A. ABUGATTAS PE 34940, ON JULY 28, 2004

NOTE: IT IS THE CONTRACTOR'S RESPONSIBILITY TO FIELD SURVEY ALL OVERHEAD AND UNDERGROUND UTILITIES OR OBSTRUCTIONS PRIOR TO CONSTRUCTION

DATE	BY	REV

©2003 Texas Department of Transportation

KBR
Engineered by KBR Technical Services, Inc

SCALE:
1" = 40' HORIZ
1" = 40' VERT
0 ½ 1"

IH 35
LOOP 20 TO UNIROYAL ROAD
PROPOSED CROSS SECTIONS

STATE PROJECT NO			FED RD DIV NO		COUNTY	SHEET 17 OF 104
NH-2002 (79)			6		WEBB	
STATE	DIST NO	CONT	SECT	JOB	HIGHWAY NO	SHEET NO
TEXAS	LAREDO	0018	05	062, ETC	IH 35	898

REF FILE(S): j01xsp01.bdr, bdr LV ON = 5,45,57,60-63

HOUFILE023 \hcivil\c01030\ 7/28/2004

XS ROLL .dgn-

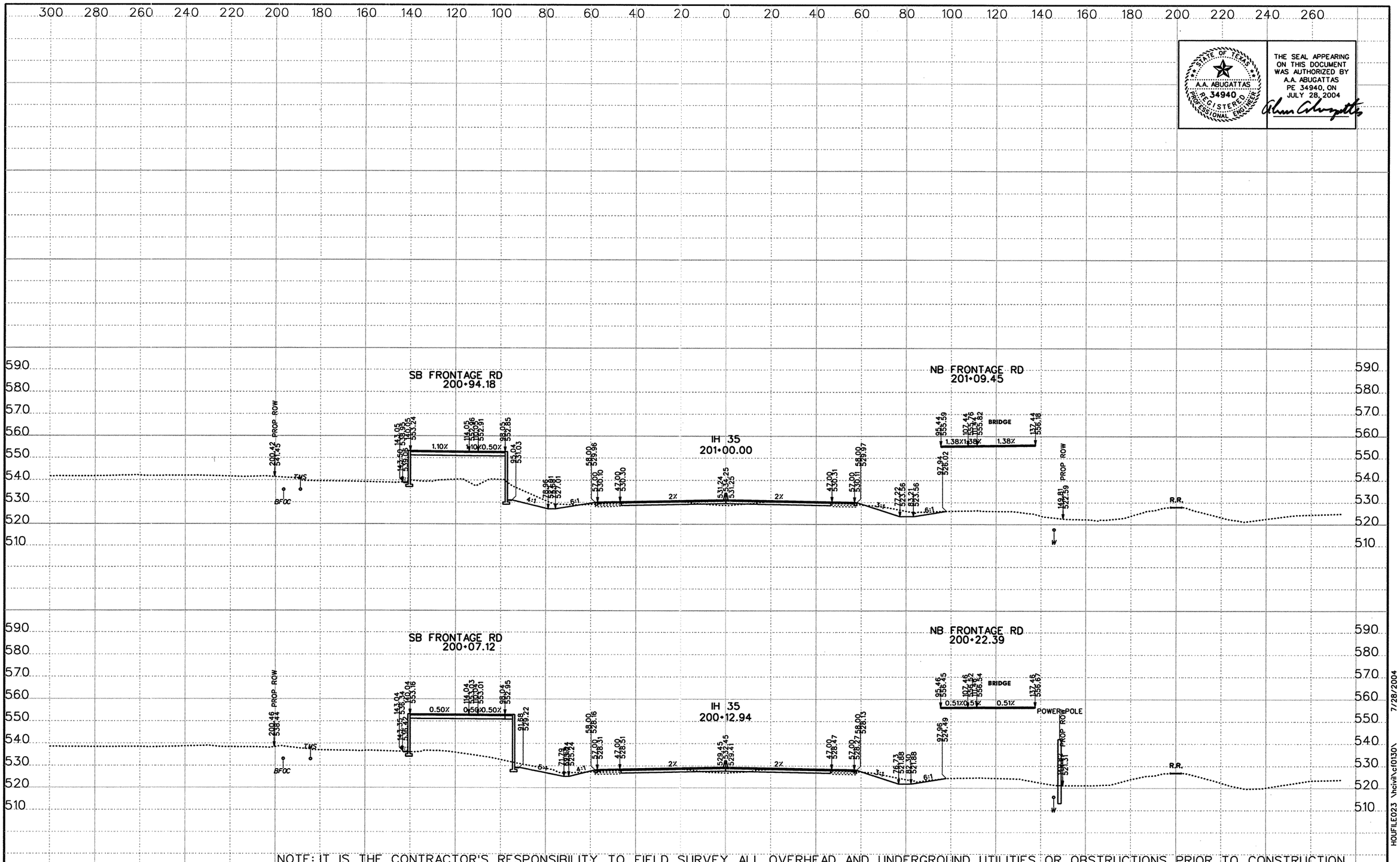

NOTE: IT IS THE CONTRACTOR'S RESPONSIBILITY TO FIELD SURVEY ALL OVERHEAD AND UNDERGROUND UTILITIES OR OBSTRUCTIONS PRIOR TO CONSTRUCTION

THE SEAL APPEARING ON THIS DOCUMENT WAS AUTHORIZED BY A.A. ABUGATTAS PE 34940, ON JULY 28, 2004

DATE	BY	REV

©2003 Texas Department of Transportation

KBR
Engineered by KBR Technical Services, Inc

SCALE:
1" = 40' HORIZ
1" = 40' VERT
0 1/2 1"

IH 35
LOOP 20 TO UNIROYAL ROAD
PROPOSED CROSS SECTIONS

STATE PROJECT NO			FED RD DIV NO		COUNTY	SHEET 18 OF 104
NH-2002 (79)			6		WEBB	
STATE	DIST NO	CONT	SECT	JOB	HIGHWAY NO	SHEET NO
TEXAS	LAREDO	0018	05	062, ETC	IH 35	899

REF FILE(S): j01xsp01.bdr, bdr LV ON = 5,45,57,60-63

XS ROLL .dgn- HOUFILE023 \hcivil\cf0130\ 7/28/2004

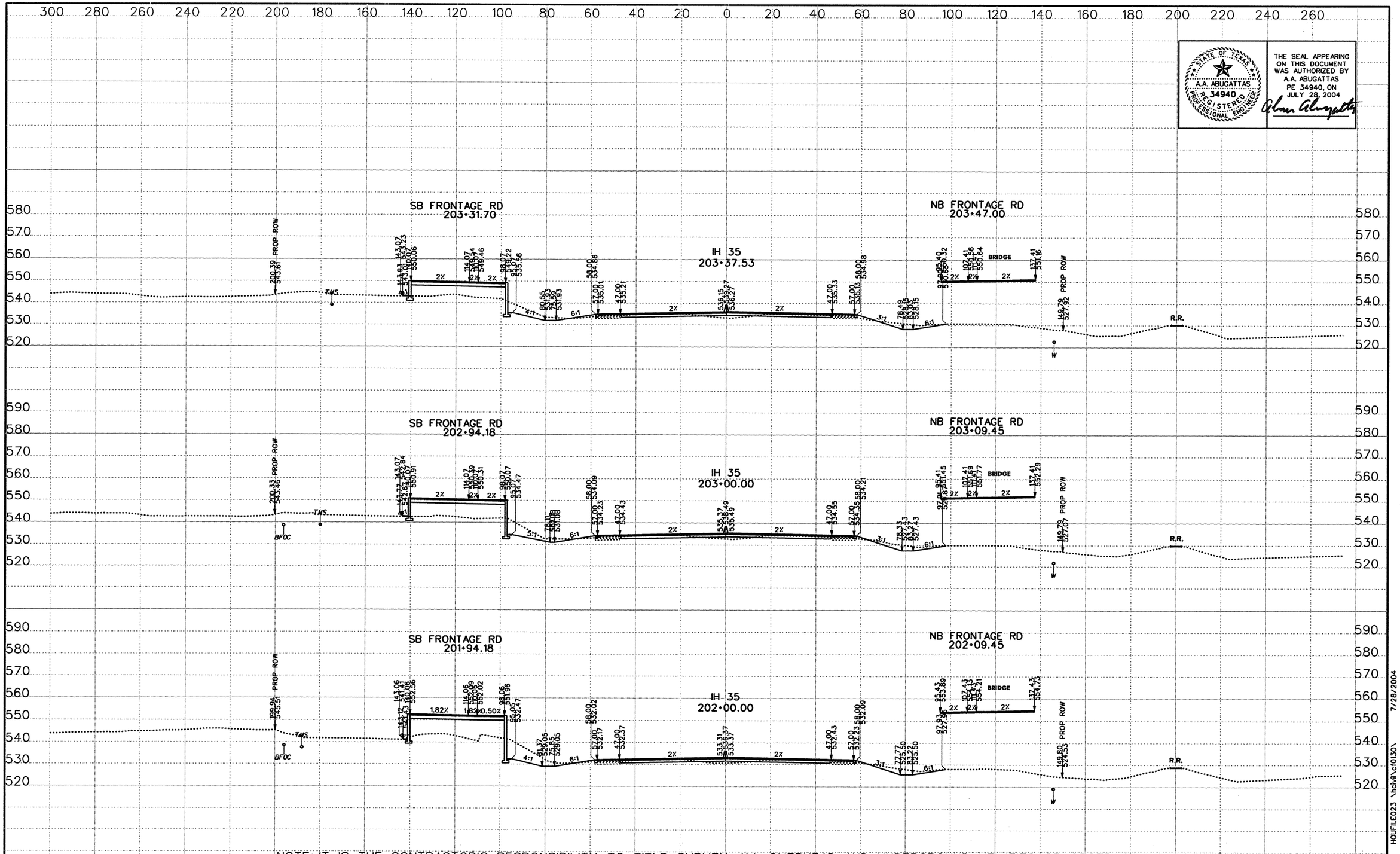

NOTE: IT IS THE CONTRACTOR'S RESPONSIBILITY TO FIELD SURVEY ALL OVERHEAD AND UNDERGROUND UTILITIES OR OBSTRUCTIONS PRIOR TO CONSTRUCTION

STATE OF TEXAS
A.A. ABUGATTAS
P. 34940
REGISTERED PROFESSIONAL ENGINEER

THE SEAL APPEARING ON THIS DOCUMENT WAS AUTHORIZED BY A.A. ABUGATTAS PE 34940, ON JULY 28, 2004

DATE	BY	REV

©2003 Texas Department of Transportation

KBR
Engineered by KBR Technical Services, Inc

SCALE:
1" = 40' HORIZ
1" = 40' VERT
0 1/2 1"

IH 35
LOOP 20 TO UNIROYAL ROAD
PROPOSED CROSS SECTIONS

STATE PROJECT NO			FED RD DIV NO		COUNTY	SHEET 19 OF 104
NH-2002 (79)			6		WEBB	
STATE	DIST NO	CONT	SECT	JOB	HIGHWAY NO	SHEET NO
TEXAS	LAREDO	0018	05	062, ETC	IH 35	900

REF FILE(S): j01xsp01.bdr, bdr LV ON = 5,45,57,60-63

HOUFILE023 \hcivil\cf0130\ 7/28/2004

XS ROLL .dgn

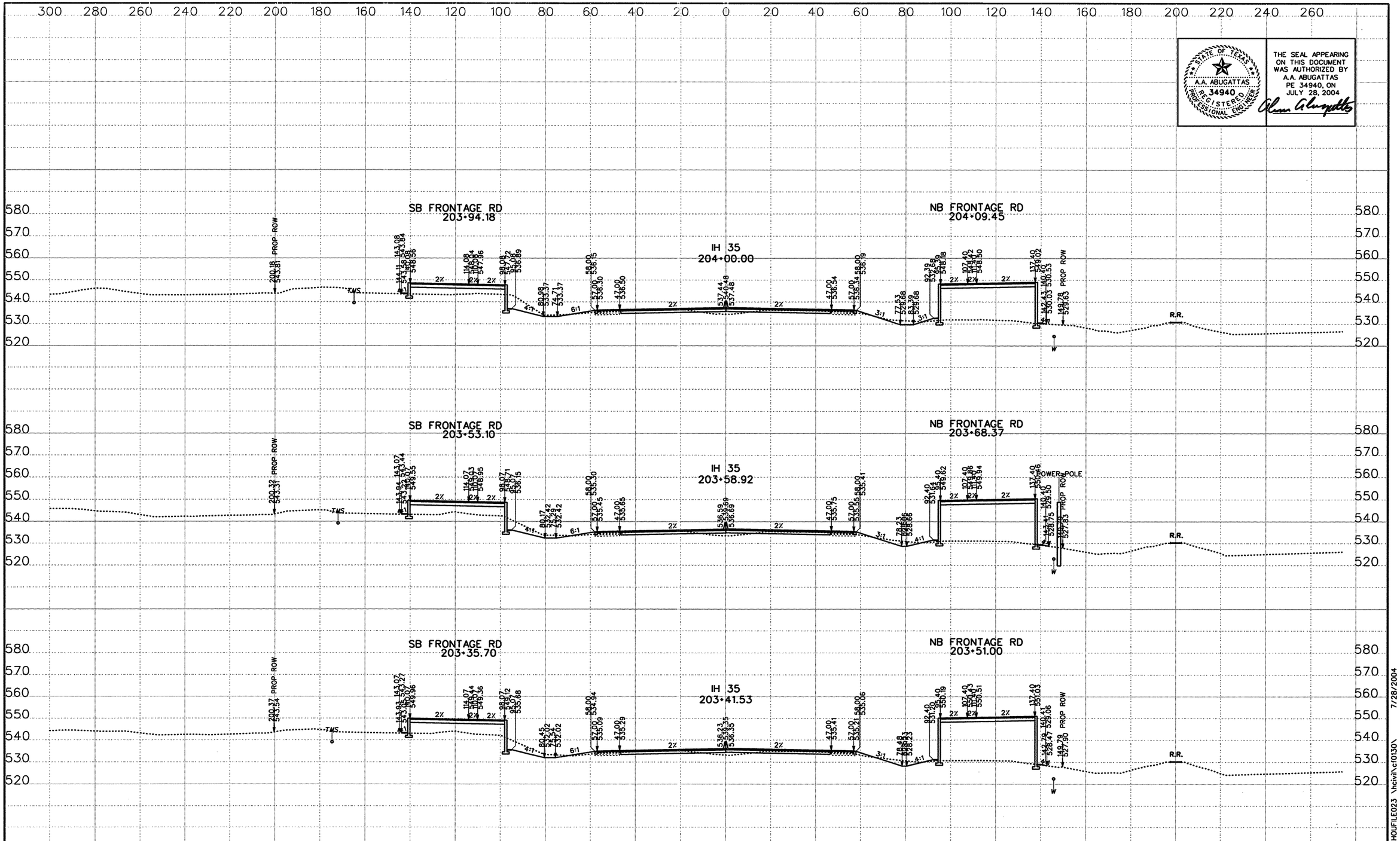

STATE OF TEXAS
A.A. ABUGATTAS
34940
REGISTERED PROFESSIONAL ENGINEER

THE SEAL APPEARING ON THIS DOCUMENT WAS AUTHORIZED BY A.A. ABUGATTAS PE 34940, ON JULY 28, 2004

NOTE: IT IS THE CONTRACTOR'S RESPONSIBILITY TO FIELD SURVEY ALL OVERHEAD AND UNDERGROUND UTILITIES OR OBSTRUCTIONS PRIOR TO CONSTRUCTION

DATE	BY	REV

©2003 Texas Department of Transportation

KBR
Engineered by KBR Technical Services, Inc

SCALE:
1" = 40' HORIZ
1" = 40' VERT
0 1/2 1"

IH 35
LOOP 20 TO UNIROYAL ROAD
PROPOSED CROSS SECTIONS

STATE PROJECT NO			FED RD DIV NO		COUNTY	SHEET 20 OF 104
NH-2002 (79)			6		WEBB	
STATE	DIST NO	CONT	SECT	JOB	HIGHWAY NO	SHEET NO
TEXAS	LAREDO	0018	05	062, ETC	IH 35	901

REF FILE(S): j01xsp01.bdr, bdr LV ON = 5,45,57,60-63

HOUFILE023 \hcivil\cf0130\ 7/28/2004

XS ROLL .dgn

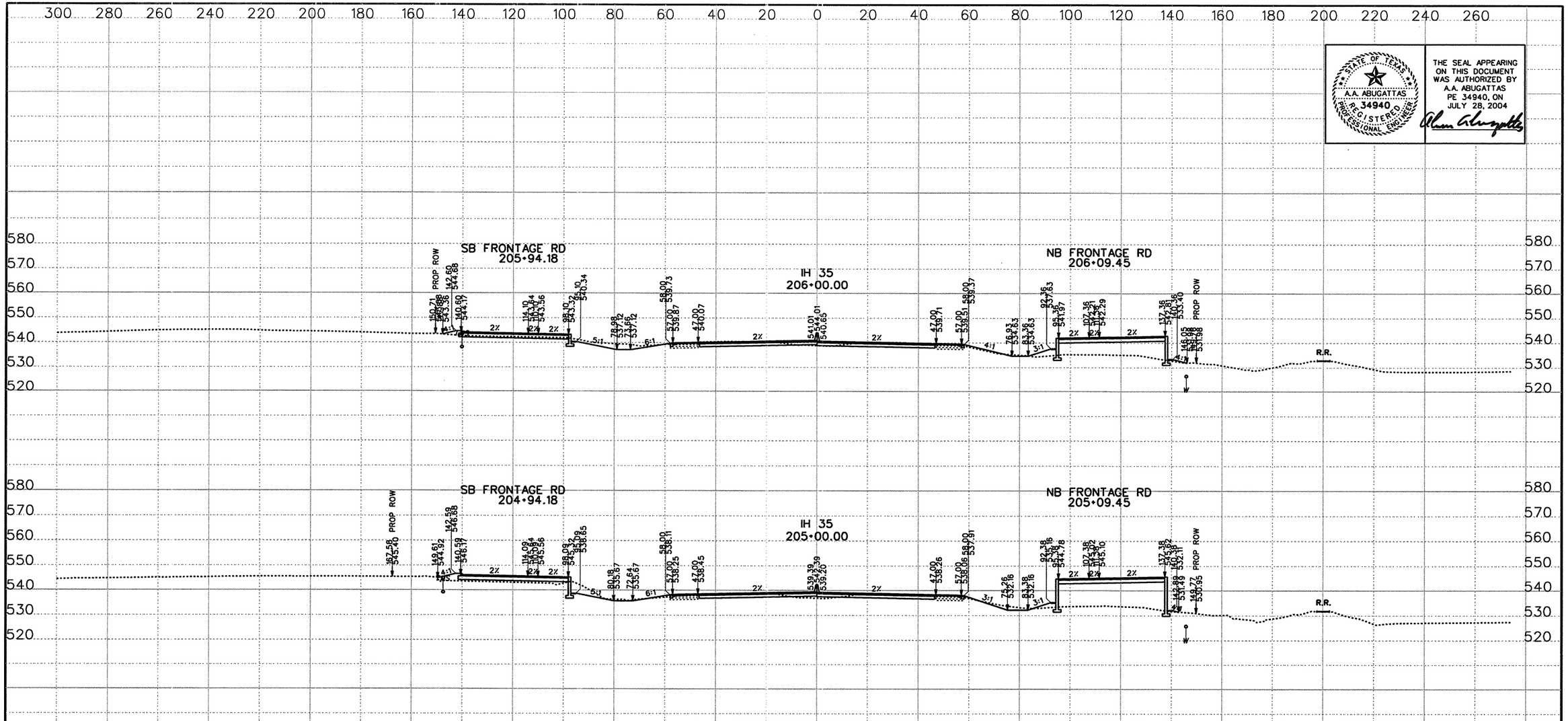

STATE OF TEXAS
A.A. ABUGATTAS
34940
REGISTERED PROFESSIONAL ENGINEER

THE SEAL APPEARING ON THIS DOCUMENT WAS AUTHORIZED BY A.A. ABUGATTAS PE 34940, ON JULY 28, 2004

NOTE: IT IS THE CONTRACTOR'S RESPONSIBILITY TO FIELD SURVEY ALL OVERHEAD AND UNDERGROUND UTILITIES OR OBSTRUCTIONS PRIOR TO CONSTRUCTION

DATE	BY	REV

©2003 Texas Department of Transportation

KBR
Engineered by KBR Technical Services, Inc

SCALE:
1" = 40' HORIZ
1" = 40' VERT
0 ½ 1"

IH 35
LOOP 20 TO UNIROYAL ROAD
PROPOSED CROSS SECTIONS

STATE PROJECT NO			FED RD DIV NO		COUNTY	SHEET 21 OF 104
NH-2002 (79)			6		WEBB	
STATE	DIST NO	CONT	SECT	JOB	HIGHWAY NO	SHEET NO
TEXAS	LAREDO	0018	05	062, ETC	IH 35	902

REF FILE(S): j01xsp01.bdr, bdr LV ON = 5,45,57,60-63

XS ROLL .dgn- HOUFILE023 \hcivil\c10130\ 7/28/2004

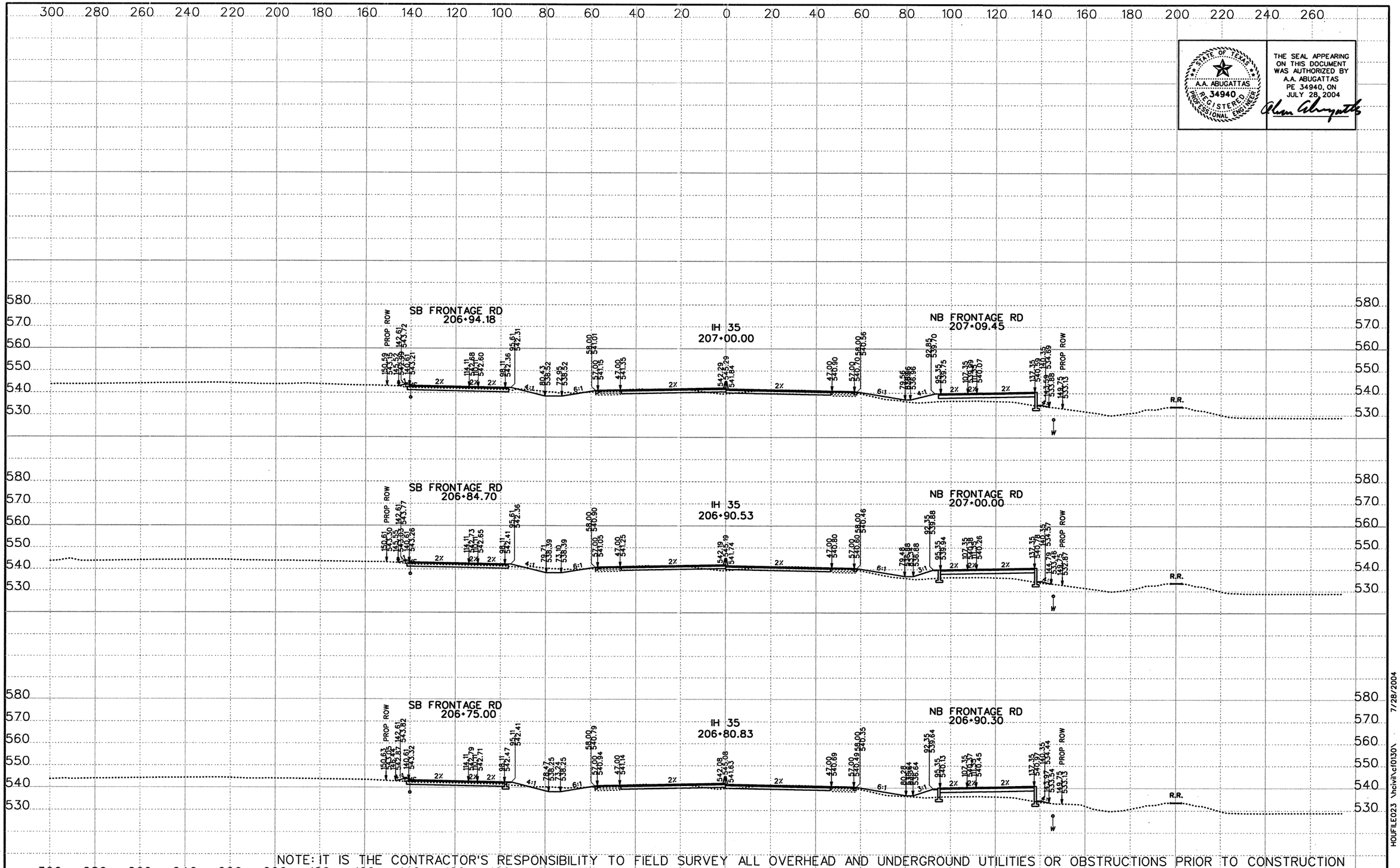

NOTE: IT IS THE CONTRACTOR'S RESPONSIBILITY TO FIELD SURVEY ALL OVERHEAD AND UNDERGROUND UTILITIES OR OBSTRUCTIONS PRIOR TO CONSTRUCTION

STATE OF TEXAS
A.A. ABUGATTAS
P.E. 34940
REGISTERED PROFESSIONAL ENGINEER

THE SEAL APPEARING ON THIS DOCUMENT WAS AUTHORIZED BY A.A. ABUGATTAS PE 34940, ON JULY 28, 2004

DATE	BY	REV

©2003 Texas Department of Transportation

KBR
Engineered by KBR Technical Services, Inc

SCALE:
1" = 40' HORIZ
1" = 40' VERT
0 1/2 1"

IH 35
LOOP 20 TO UNIROYAL ROAD
PROPOSED CROSS SECTIONS

STATE PROJECT NO			FED RD DIV NO		COUNTY	SHEET 22 OF 104
NH-2002 (79)			6		WEBB	
STATE	DIST NO	CONT	SECT	JOB	HIGHWAY NO	SHEET NO
TEXAS	LAREDO	0018	05	062, ETC	IH 35	903

REF FILE(S): j01xsp01.bdr, bdr LV ON = 5,45,57,60-63

HOUFILE023 \hcivil\cf0130\ 7/28/2004 XS ROLL .dgn

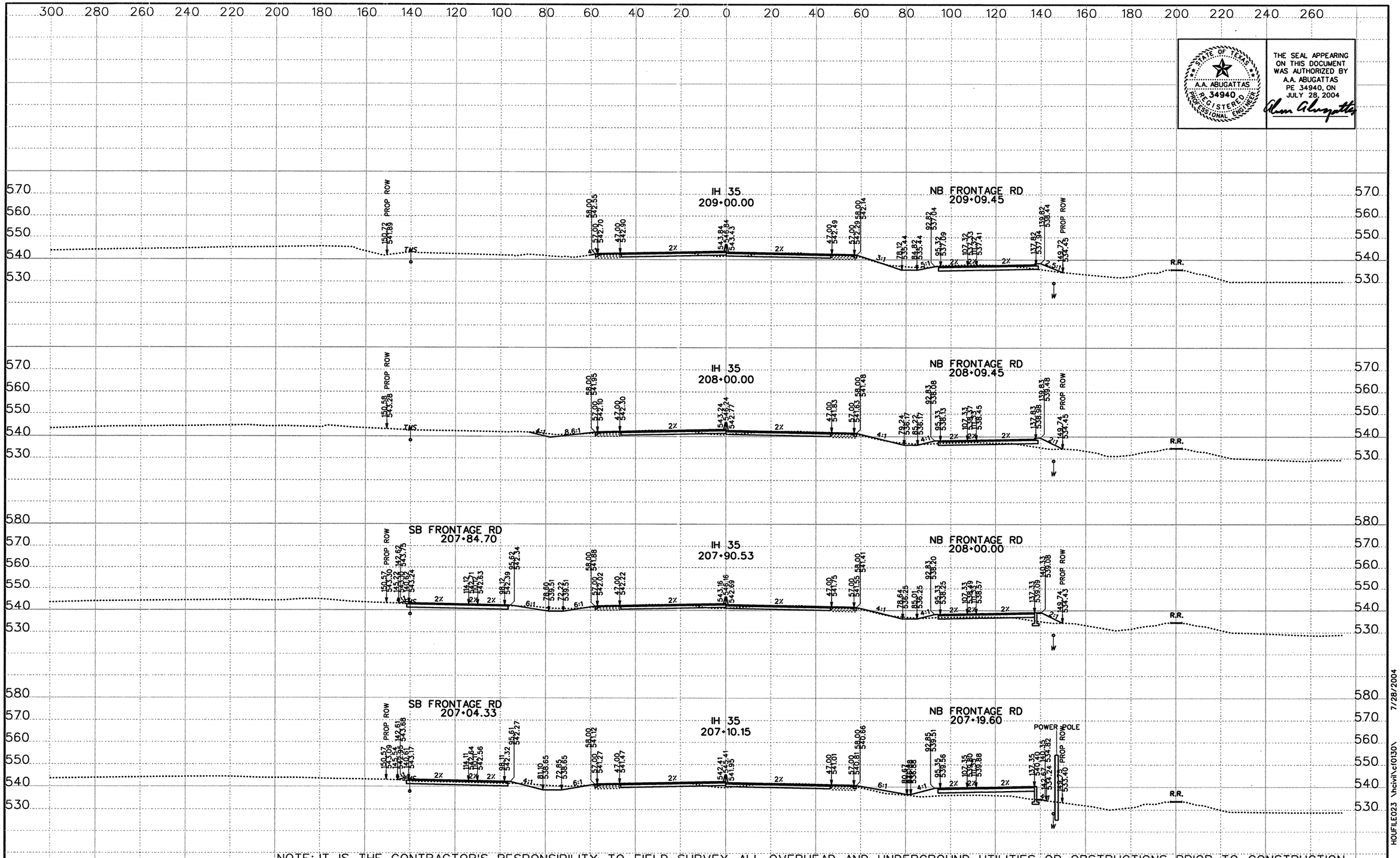

THE SEAL APPEARING ON THIS DOCUMENT WAS AUTHORIZED BY A.A. ABUGATTAS PE 34940, ON JULY 28, 2004

NOTE: IT IS THE CONTRACTOR'S RESPONSIBILITY TO FIELD SURVEY ALL OVERHEAD AND UNDERGROUND UTILITIES OR OBSTRUCTIONS PRIOR TO CONSTRUCTION

DATE	BY	REV

©2003 Texas Department of Transportation

KBR
Engineered by KBR Technical Services, Inc

SCALE:
1" = 40' HORIZ
1" = 40' VERT
0 ½ 1"

IH 35
LOOP 20 TO UNIROYAL ROAD
PROPOSED CROSS SECTIONS

STATE PROJECT NO			FED RD DIV NO		COUNTY	SHEET 23 OF 104
NH-2002 (79)			6		WEBB	
STATE	DIST NO	CONT	SECT	JOB	HIGHWAY NO	SHEET NO
TEXAS	LAREDO	0018	05	062, ETC	IH 35	904

REF FILE(S): j01xsp01.bdr, bdr LV ON = 5,45,57,60-63

XS ROLL .dgn- HOUFILE023 \hcivil\c(0130\ 7/28/2004

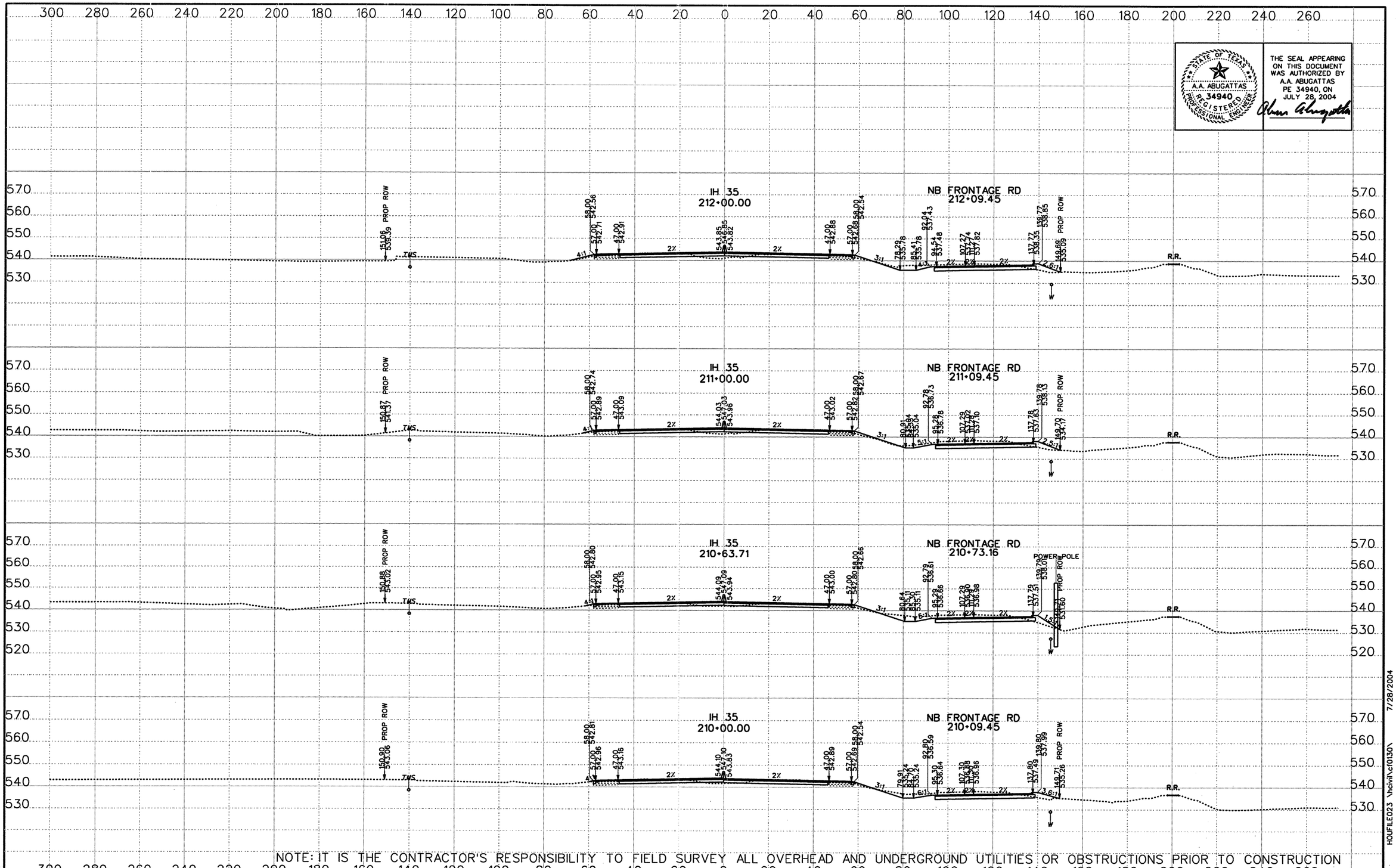

NOTE: IT IS THE CONTRACTOR'S RESPONSIBILITY TO FIELD SURVEY ALL OVERHEAD AND UNDERGROUND UTILITIES OR OBSTRUCTIONS PRIOR TO CONSTRUCTION

STATE OF TEXAS
A.A. ABUGATTAS
PE 34940
REGISTERED PROFESSIONAL ENGINEER

THE SEAL APPEARING ON THIS DOCUMENT WAS AUTHORIZED BY A.A. ABUGATTAS PE 34940, ON JULY 28, 2004

DATE	BY	REV

©2003 Texas Department of Transportation

KBR
Engineered by KBR Technical Services, Inc

SCALE:
1" = 40' HORIZ
1" = 40' VERT
0 ½ 1"

IH 35
LOOP 20 TO UNIROYAL ROAD
PROPOSED CROSS SECTIONS

STATE PROJECT NO			FED RD DIV NO		COUNTY	SHEET 24 OF 104
NH-2002 (79)			6		WEBB	
STATE	DIST NO	CONT	SECT	JOB	HIGHWAY NO	SHEET NO
TEXAS	LAREDO	0018	05	062, ETC	IH 35	905

REF FILE(S): j01xsp01.bdr, bdr LV ON = 5,45,57,60-63

XS ROLL .dgn- HOUFILE023 \hcivil\cf0130\ 7/28/2004

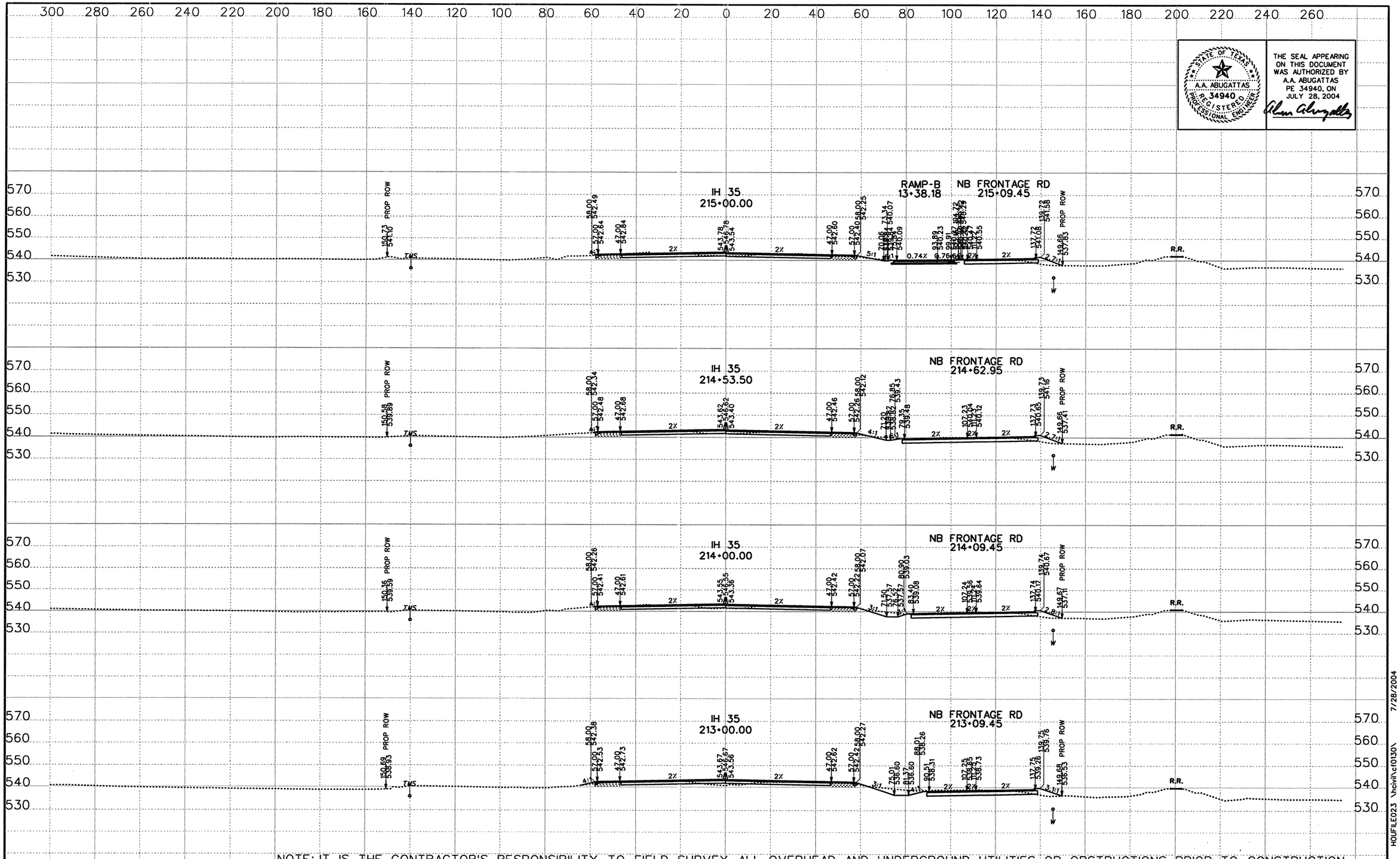

STATE OF TEXAS
A.A. ABUGATTAS
34940
REGISTERED PROFESSIONAL ENGINEER

THE SEAL APPEARING ON THIS DOCUMENT WAS AUTHORIZED BY A.A. ABUGATTAS PE 34940, ON JULY 28, 2004

NOTE: IT IS THE CONTRACTOR'S RESPONSIBILITY TO FIELD SURVEY ALL OVERHEAD AND UNDERGROUND UTILITIES OR OBSTRUCTIONS PRIOR TO CONSTRUCTION

DATE	BY	REV

©2003 Texas Department of Transportation

KBR
Engineered by KBR Technical Services, Inc

SCALE:
1" = 40' HORIZ
1" = 40' VERT
0 1/2 1"

IH 35
LOOP 20 TO UNIROYAL ROAD
PROPOSED CROSS SECTIONS

STATE PROJECT NO			FED RD DIV NO		COUNTY	SHEET 25 OF 104
NH-2002 (79)			6		WEBB	
STATE	DIST NO	CONT	SECT	JOB	HIGHWAY NO	SHEET NO
TEXAS	LAREDO	0018	05	062, ETC	IH 35	906

REF FILE(S): j01xsp01.bdr, bdr LV ON = 5,45,57,60-63

XS ROLL .dgn- HOUFILE023 \hcivil\cf0130\ 7/28/2004

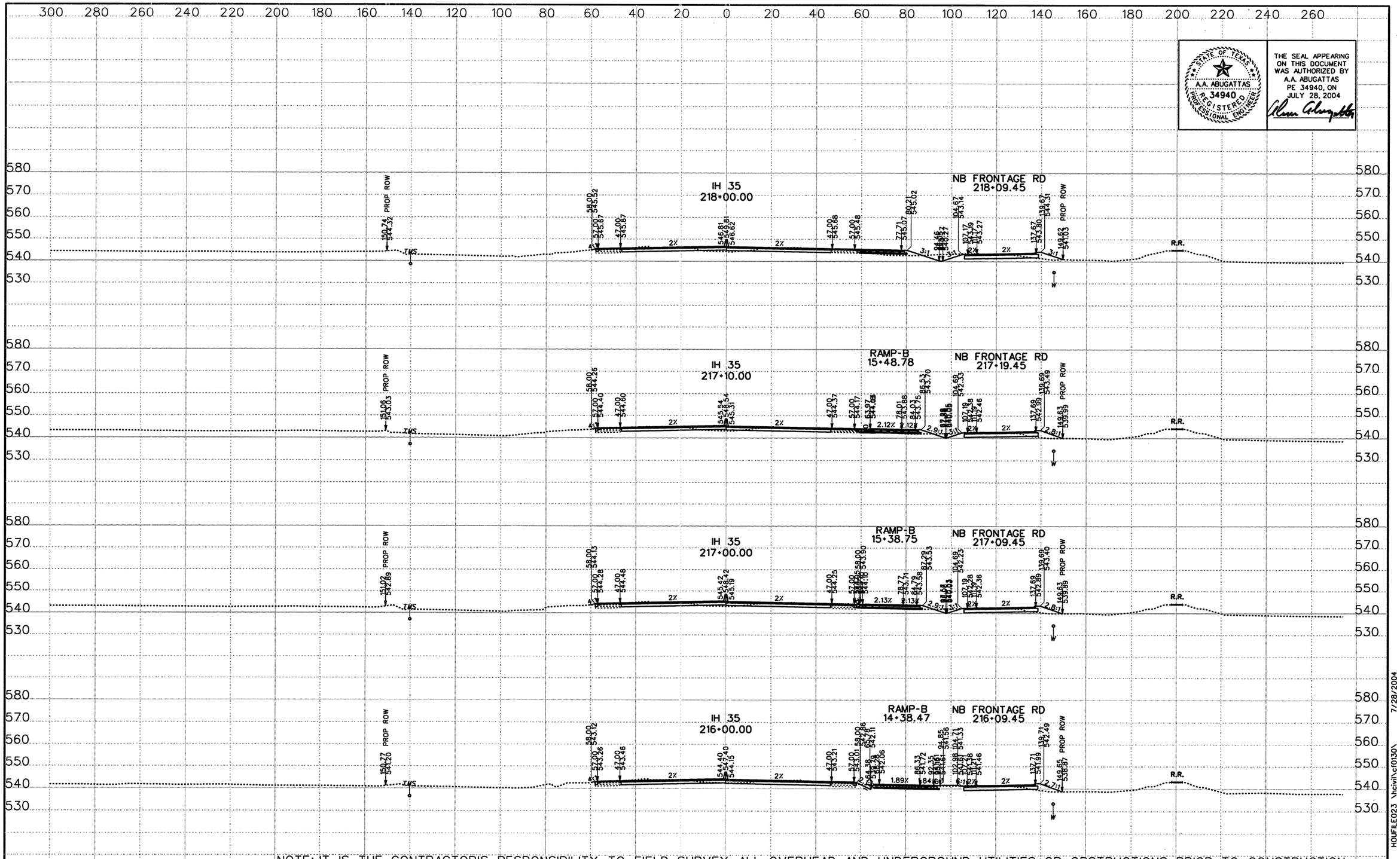

THE SEAL APPEARING ON THIS DOCUMENT WAS AUTHORIZED BY A.A. ABUGATTAS PE 34940, ON JULY 28, 2004

NOTE: IT IS THE CONTRACTOR'S RESPONSIBILITY TO FIELD SURVEY ALL OVERHEAD AND UNDERGROUND UTILITIES OR OBSTRUCTIONS PRIOR TO CONSTRUCTION

DATE	BY	REV

©2003 Texas Department of Transportation

KBR
Engineered by KBR Technical Services, Inc

SCALE:
1" = 40' HORIZ
1" = 40' VERT
0 ½ 1"

IH 35
LOOP 20 TO UNIROYAL ROAD
PROPOSED CROSS SECTIONS

STATE PROJECT NO			FED RD DIV NO		COUNTY	SHEET 26 OF 104
NH-2002 (79)			6		WEBB	
STATE	DIST NO	CONT	SECT	JOB	HIGHWAY NO	SHEET NO
TEXAS	LAREDO	0018	05	062, ETC	IH 35	907

REF FILE(S): j01xsp01.bdr, bdr LV ON = 5,45,57,60-63

HOUFILE023 \hcivil\cf0130\ 7/28/2004

XS ROLL .dgn

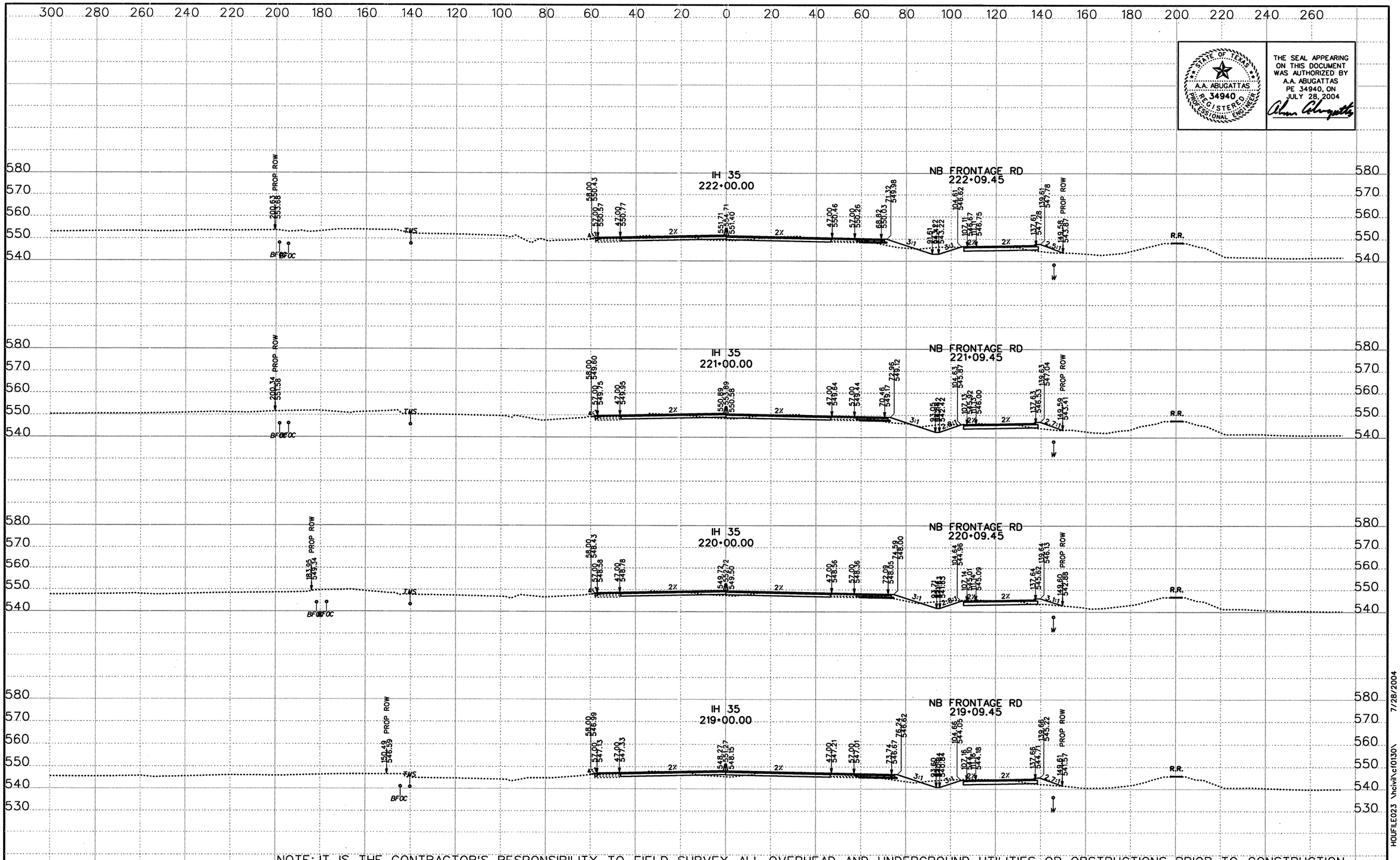

STATE OF TEXAS
A.A. ABUGATTAS
34940
REGISTERED PROFESSIONAL ENGINEER

THE SEAL APPEARING ON THIS DOCUMENT WAS AUTHORIZED BY A.A. ABUGATTAS PE 34940, ON JULY 28, 2004

NOTE: IT IS THE CONTRACTOR'S RESPONSIBILITY TO FIELD SURVEY ALL OVERHEAD AND UNDERGROUND UTILITIES OR OBSTRUCTIONS PRIOR TO CONSTRUCTION

DATE	BY	REV

©2003 Texas Department of Transportation

KBR
Engineered by KBR Technical Services, Inc

SCALE:
1" = 40' HORIZ
1" = 40' VERT
0 ½ 1"

IH 35
LOOP 20 TO UNIROYAL ROAD
PROPOSED CROSS SECTIONS

STATE PROJECT NO			FED RD DIV NO		COUNTY	SHEET 27 OF 104
NH-2002 (79)			6		WEBB	
STATE	DIST NO	CONT	SECT	JOB	HIGHWAY NO.	SHEET NO
TEXAS	LAREDO	0018	05	062, ETC	IH 35	908

REF FILE(S): j01xsp01.bdr, bdr LV ON = 5,45,57,60-63

XS ROLL .dgn- HOUFILE023 \hcivil\c10130\ 7/28/2004

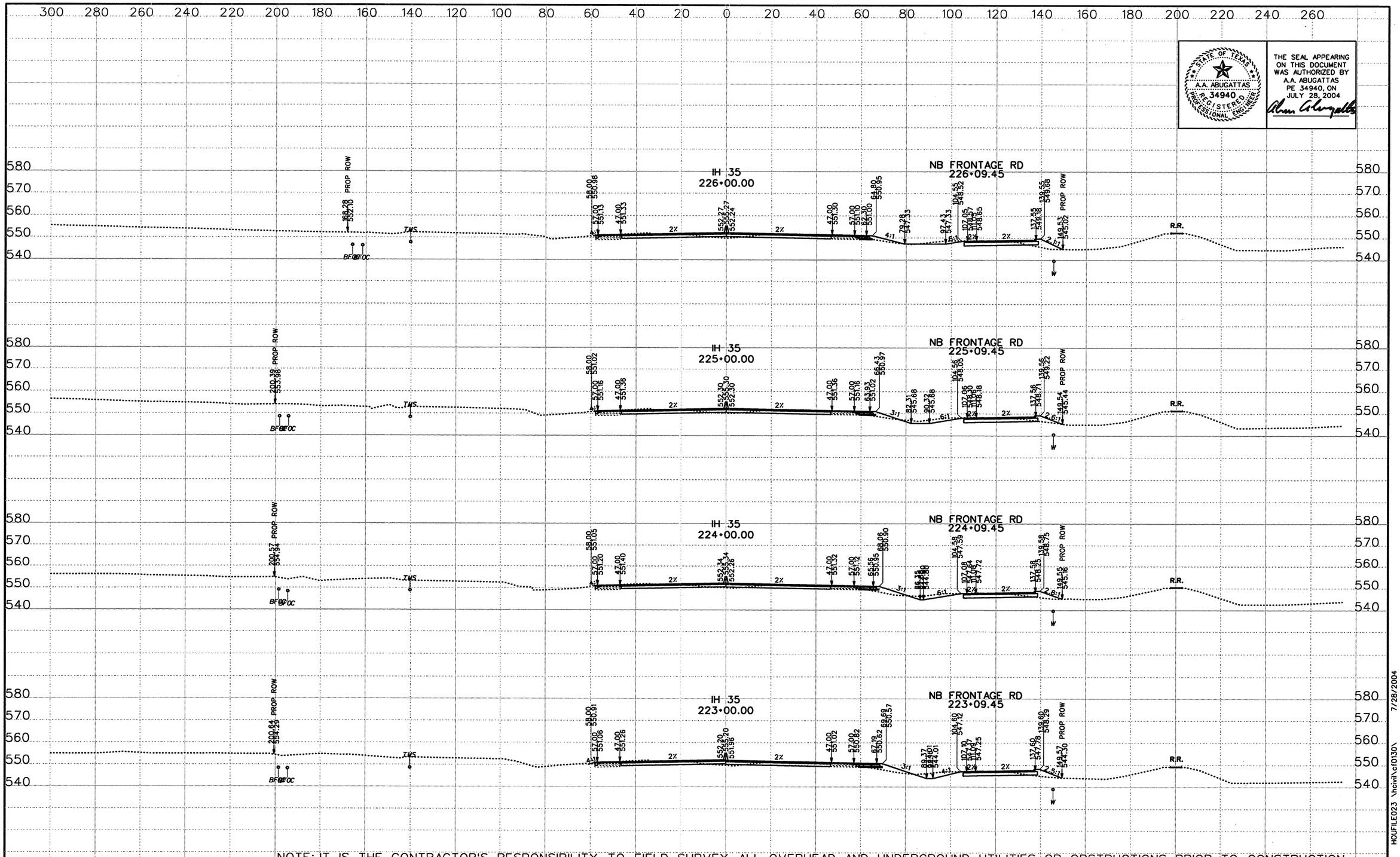

STATE OF TEXAS
A.A. ABUGATTAS
34940
REGISTERED PROFESSIONAL ENGINEER

THE SEAL APPEARING ON THIS DOCUMENT WAS AUTHORIZED BY A.A. ABUGATTAS PE 34940, ON JULY 28, 2004

NOTE: IT IS THE CONTRACTOR'S RESPONSIBILITY TO FIELD SURVEY ALL OVERHEAD AND UNDERGROUND UTILITIES OR OBSTRUCTIONS PRIOR TO CONSTRUCTION

DATE	BY	REV

©2003 Texas Department of Transportation

KBR
Engineered by KBR Technical Services, Inc

SCALE:
1" = 40' HORIZ
1" = 40' VERT
0 ½ 1"

IH 35
LOOP 20 TO UNIROYAL ROAD
PROPOSED CROSS SECTIONS

STATE PROJECT NO			FED RD DIV NO		COUNTY	SHEET 28 OF 104
NH-2002 (79)			6		WEBB	
STATE	DIST NO	CONT	SECT	JOB	HIGHWAY NO	SHEET NO
TEXAS	LAREDO	0018	05	062, ETC	IH 35	909

REF FILE(S): j01xsp01.bdr, bdr LV ON = 5,45,57,60-63

XS ROLL .dgn- HOUFILE023 \hcivil\cf0130\ 7/28/2004

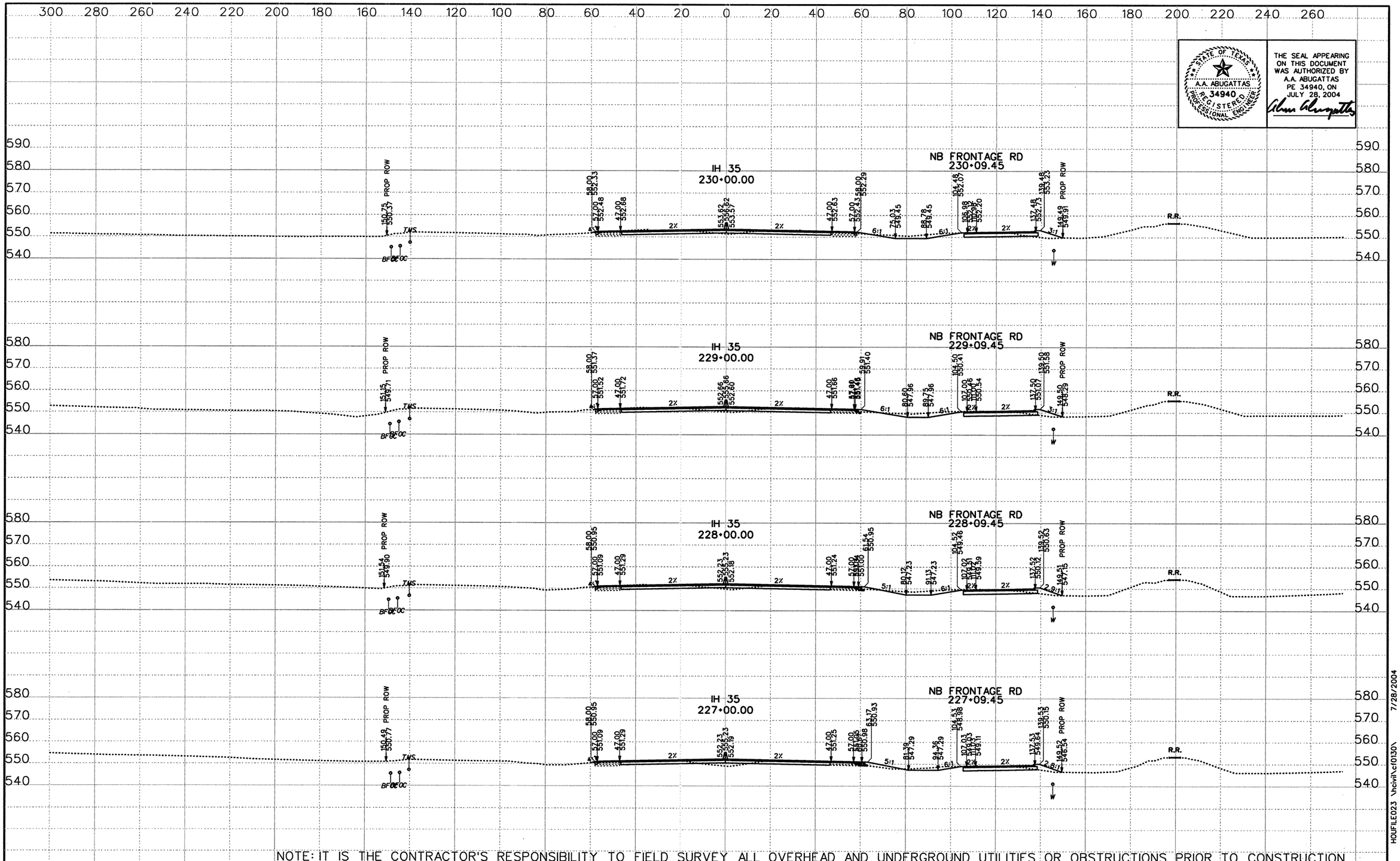

STATE OF TEXAS
A.A. ABUGATTAS
34940
REGISTERED PROFESSIONAL ENGINEER

THE SEAL APPEARING ON THIS DOCUMENT WAS AUTHORIZED BY A.A. ABUGATTAS PE 34940, ON JULY 28, 2004

NOTE: IT IS THE CONTRACTOR'S RESPONSIBILITY TO FIELD SURVEY ALL OVERHEAD AND UNDERGROUND UTILITIES OR OBSTRUCTIONS PRIOR TO CONSTRUCTION

DATE	BY	REV

©2003 Texas Department of Transportation

KBR
Engineered by KBR Technical Services, Inc

SCALE:
1" = 40' HORIZ
1" = 40' VERT
0 1/2 1"

IH 35
LOOP 20 TO UNIROYAL ROAD
PROPOSED CROSS SECTIONS

STATE PROJECT NO			FED RD DIV NO		COUNTY	SHEET 29 OF 104
NH-2002 (79)			6		WEBB	
STATE	DIST NO	CONT	SECT	JOB	HIGHWAY NO	SHEET NO
TEXAS	LAREDO	0018	05	062, ETC	IH 35	910

REF FILE(S): j01xsp01.bdr, bdr LV ON = 5,45,57,60-63

HOUFILE023 \hcivil\cf0130\ 7/28/2004

XS ROLL .dgn

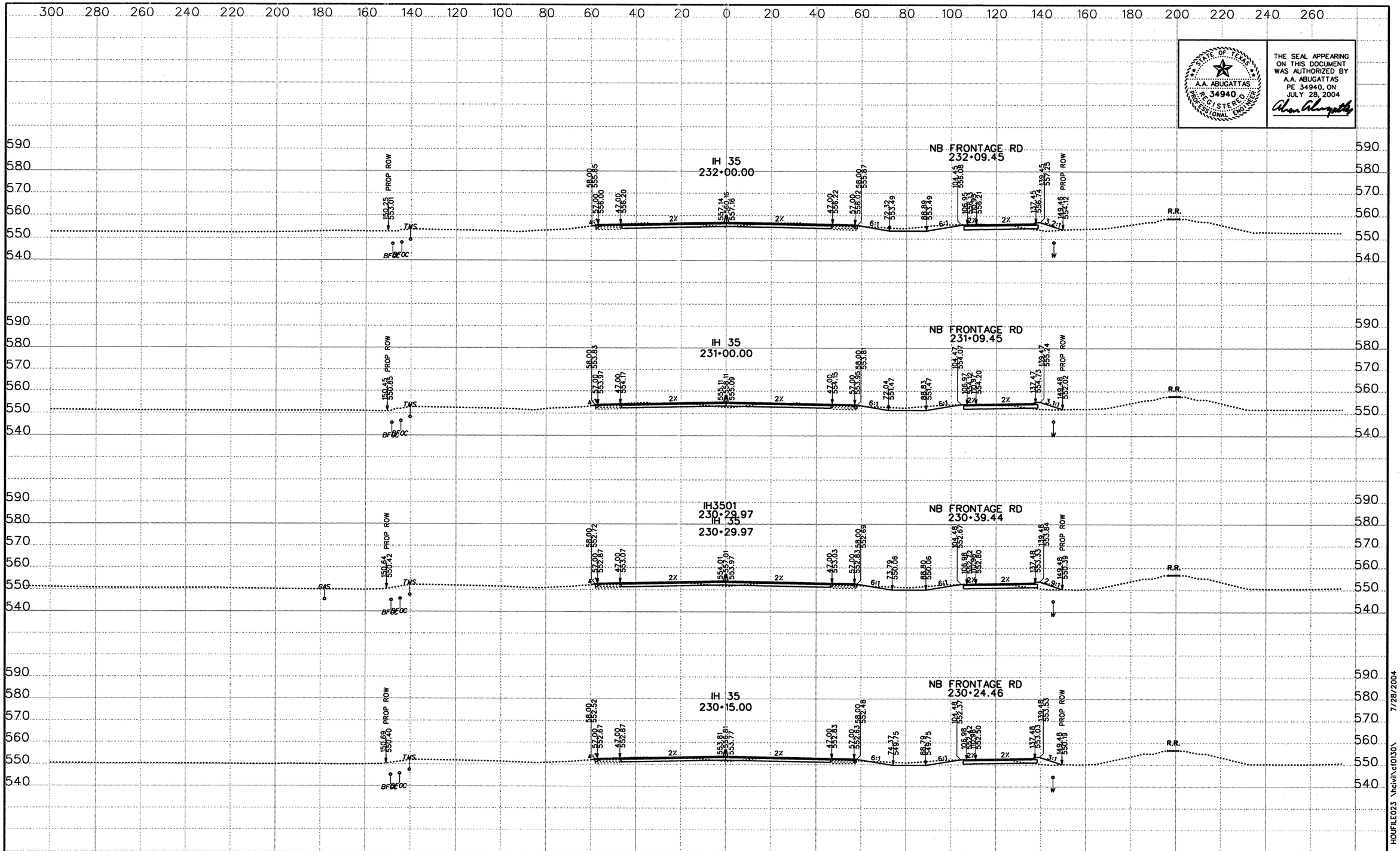

THE SEAL APPEARING ON THIS DOCUMENT WAS AUTHORIZED BY A.A. ABUGATTAS PE 34940, ON JULY 28, 2004

STATE OF TEXAS — A.A. ABUGATTAS — 34940 — REGISTERED PROFESSIONAL ENGINEER

NOTE: IT IS THE CONTRACTOR'S RESPONSIBILITY TO FIELD SURVEY ALL OVERHEAD AND UNDERGROUND UTILITIES OR OBSTRUCTIONS PRIOR TO CONSTRUCTION

DATE	BY	REV

©2003 Texas Department of Transportation

KBR
Engineered by KBR Technical Services, Inc

SCALE:
1" = 40' HORIZ
1" = 40' VERT
0 1/2 1"

IH 35
LOOP 20 TO UNIROYAL ROAD
PROPOSED CROSS SECTIONS

STATE PROJECT NO			FED RD DIV NO		COUNTY	SHEET 30 OF 104
NH-2002 (79)			6		WEBB	
STATE	DIST NO	CONT	SECT	JOB	HIGHWAY NO	SHEET NO
TEXAS	LAREDO	0018	05	062, ETC	IH 35	911

REF FILE(S): j01xsp01.bdr, bdr LV ON = 5,45,57,60-63

HOUFILE023 \hcivil\cf0130\ 7/28/2004

XS ROLL .dgn-

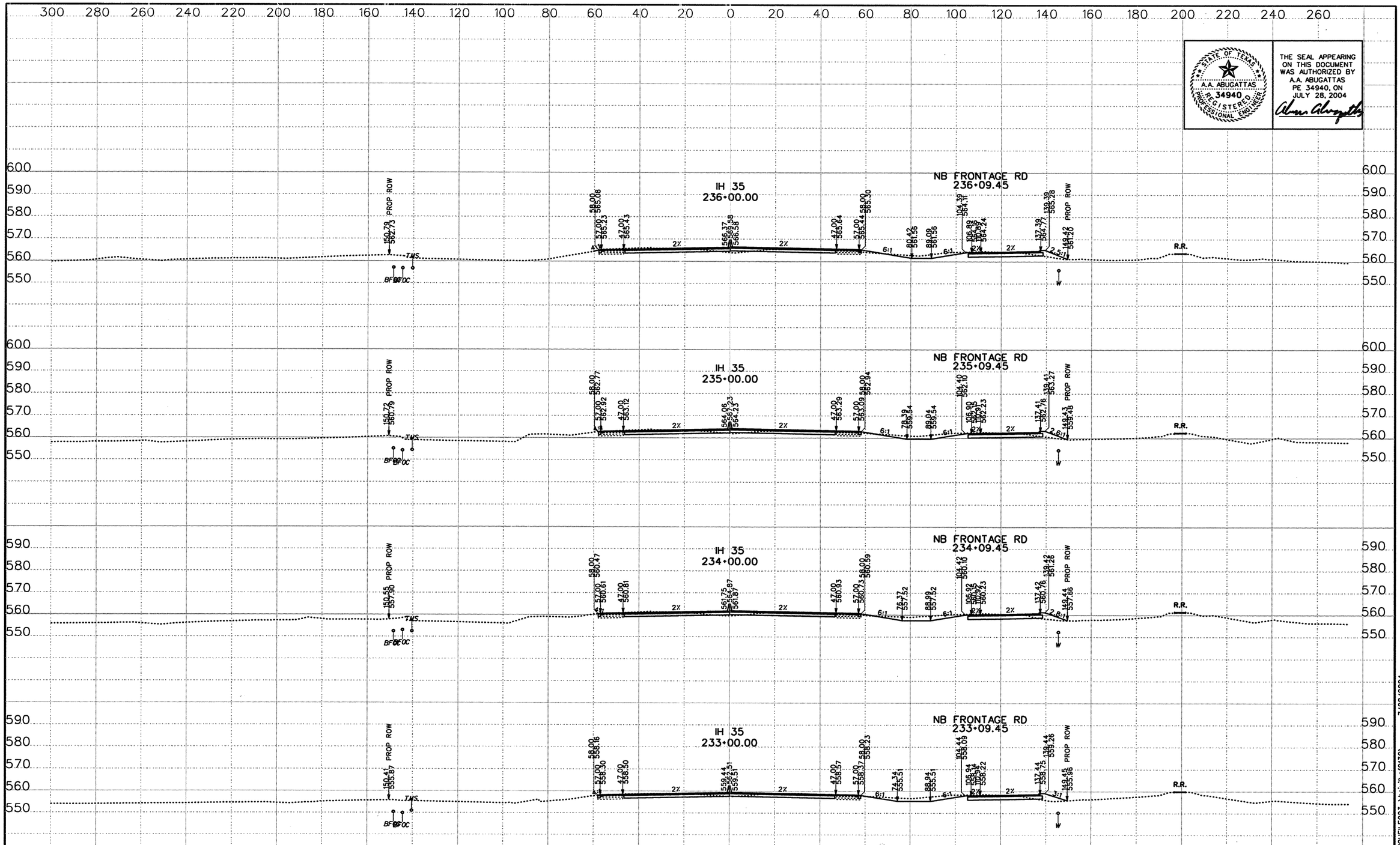

STATE OF TEXAS
A.A. ABUGATTAS
34940
REGISTERED PROFESSIONAL ENGINEER

THE SEAL APPEARING ON THIS DOCUMENT WAS AUTHORIZED BY A.A. ABUGATTAS PE 34940, ON JULY 28, 2004

NOTE: IT IS THE CONTRACTOR'S RESPONSIBILITY TO FIELD SURVEY ALL OVERHEAD AND UNDERGROUND UTILITIES OR OBSTRUCTIONS PRIOR TO CONSTRUCTION

DATE	BY	REV

©2003 Texas Department of Transportation

KBR
Engineered by KBR Technical Services, Inc

SCALE:
1" = 40' HORIZ
1" = 40' VERT
0 ½ 1"

IH 35
LOOP 20 TO UNIROYAL ROAD
PROPOSED CROSS SECTIONS

STATE PROJECT NO			FED RD DIV NO		COUNTY	SHEET 31 OF 104
NH-2002 (79)			6		WEBB	
STATE	DIST NO	CONT	SECT	JOB	HIGHWAY NO	SHEET NO
TEXAS	LAREDO	0018	05	062, ETC	IH 35	912

REF FILE(S): j01xsp01.bdr, bdr LV ON = 5,45,57,60-63

XS ROLL .dgn- HOUFILE023 \hcivil\c10130\ 7/28/2004

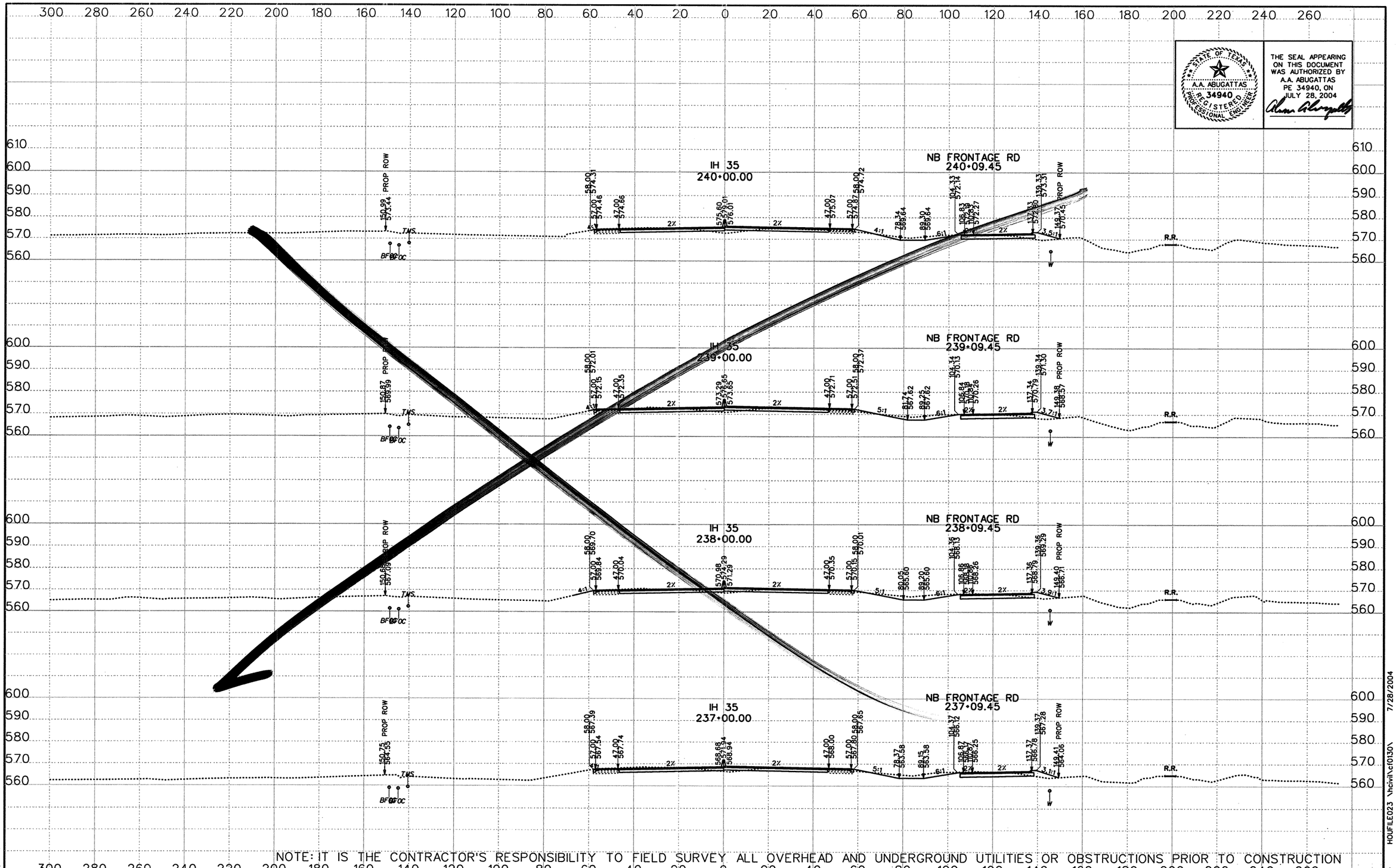

STATE OF TEXAS
A.A. ABUGATTAS
34940
REGISTERED PROFESSIONAL ENGINEER

THE SEAL APPEARING ON THIS DOCUMENT WAS AUTHORIZED BY A.A. ABUGATTAS PE 34940, ON JULY 28, 2004

NOTE: IT IS THE CONTRACTOR'S RESPONSIBILITY TO FIELD SURVEY ALL OVERHEAD AND UNDERGROUND UTILITIES OR OBSTRUCTIONS PRIOR TO CONSTRUCTION

DATE	BY	REV

©2003 Texas Department of Transportation

KBR
Engineered by KBR Technical Services, Inc

SCALE:
1" = 40' HORIZ
1" = 40' VERT
0 ½ 1"

IH 35
LOOP 20 TO UNIROYAL ROAD
PROPOSED CROSS SECTIONS

STATE PROJECT NO			FED RD DIV NO		COUNTY	SHEET 32 OF 104
NH-2002 (79)			6		WEBB	
STATE	DIST NO	CONT	SECT	JOB	HIGHWAY NO	SHEET NO
TEXAS	LAREDO	0018	05	062, ETC	IH 35	913

REF FILE(S): j01xsp01.bdr, bdr LV ON = 5,45,57,60-63

XS ROLL .dgn- HOUFILE023 \hcivil\cf0130\ 7/28/2004

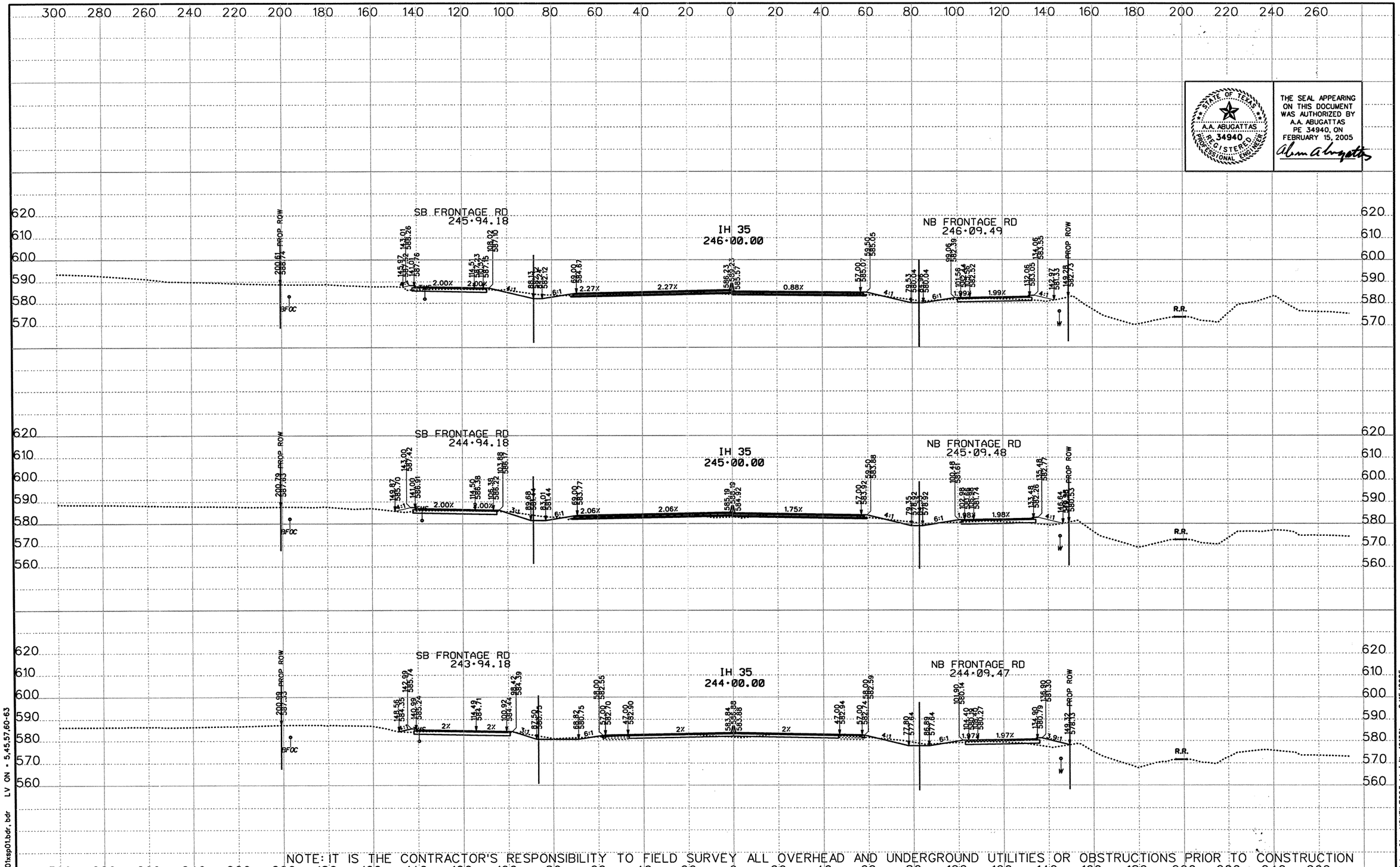

STATE OF TEXAS
A.A. ABUGATTAS
34940
REGISTERED PROFESSIONAL ENGINEER

THE SEAL APPEARING ON THIS DOCUMENT WAS AUTHORIZED BY A.A. ABUGATTAS PE 34940, ON FEBRUARY 15, 2005

NOTE: IT IS THE CONTRACTOR'S RESPONSIBILITY TO FIELD SURVEY ALL OVERHEAD AND UNDERGROUND UTILITIES OR OBSTRUCTIONS PRIOR TO CONSTRUCTION

DATE	BY	REV

©2003 Texas Department of Transportation

KBR
Engineered by KBR Technical Services, Inc

SCALE:
1" = 40' HORIZ
1" = 40' VERT
0 ½ 1"

IH 35
LOOP 20 TO UNIROYAL ROAD
PROPOSED CROSS SECTIONS

STATE PROJECT NO			FED RD DIV NO		COUNTY	SHEET 32 OF 104
NH-2002 (79)			6		WEBB	
STATE	DIST NO	CONT	SECT	JOB	HIGHWAY NO	SHEET NO
TEXAS	LAREDO	0018	05	062, ETC	IH 35	913

REF FILE(S): j01xsp01.bdr, bdr LV ON = 5,45,57,60-63

XS ROLL PLOT.dgn-01 HOUFILE023 \hcivil\c(0130\ 2/15/2005

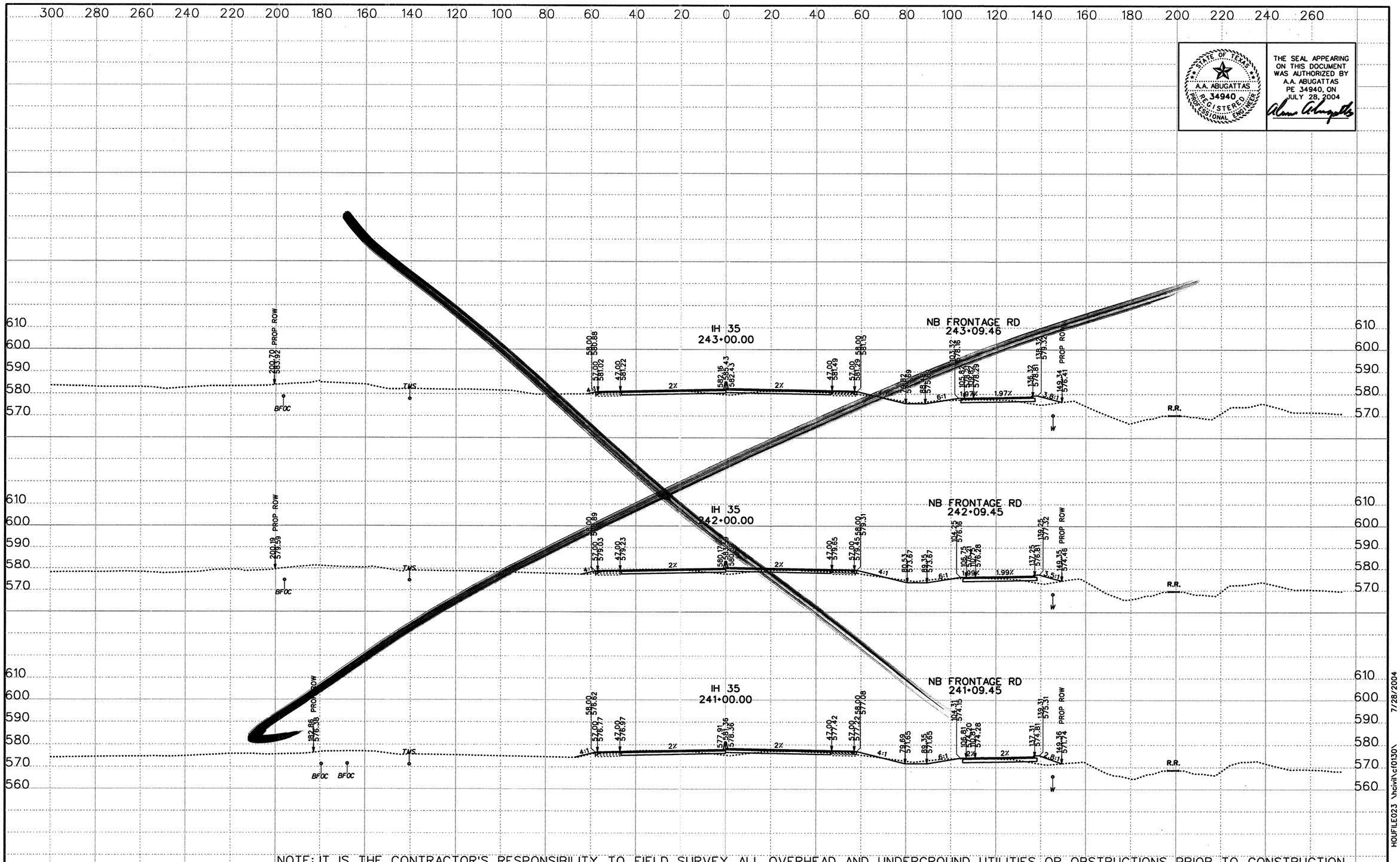

STATE OF TEXAS
A.A. ABUGATTAS
34940
REGISTERED
PROFESSIONAL ENGINEER

THE SEAL APPEARING ON THIS DOCUMENT WAS AUTHORIZED BY A.A. ABUGATTAS PE 34940, ON JULY 28, 2004

NOTE: IT IS THE CONTRACTOR'S RESPONSIBILITY TO FIELD SURVEY ALL OVERHEAD AND UNDERGROUND UTILITIES OR OBSTRUCTIONS PRIOR TO CONSTRUCTION

DATE	BY	REV

©2003 Texas Department of Transportation

KBR
Engineered by KBR Technical Services, Inc

SCALE:
1" = 40' HORIZ
1" = 40' VERT
0 ½ 1"

IH 35
LOOP 20 TO UNIROYAL ROAD
PROPOSED CROSS SECTIONS

STATE PROJECT NO			FED RD DIV NO		COUNTY	SHEET 33 OF 104
NH-2002 (79)			6		WEBB	
STATE	DIST NO	CONT	SECT	JOB	HIGHWAY NO	SHEET NO
TEXAS	LAREDO	0018	05	062, ETC	IH 35	914

REF FILE(S): j0texp01.bdr, bdr LV ON = 5,45,57,60-63

XS ROLL .dgn- HOUFILE023 \hcivil\cf0130\ 7/28/2004

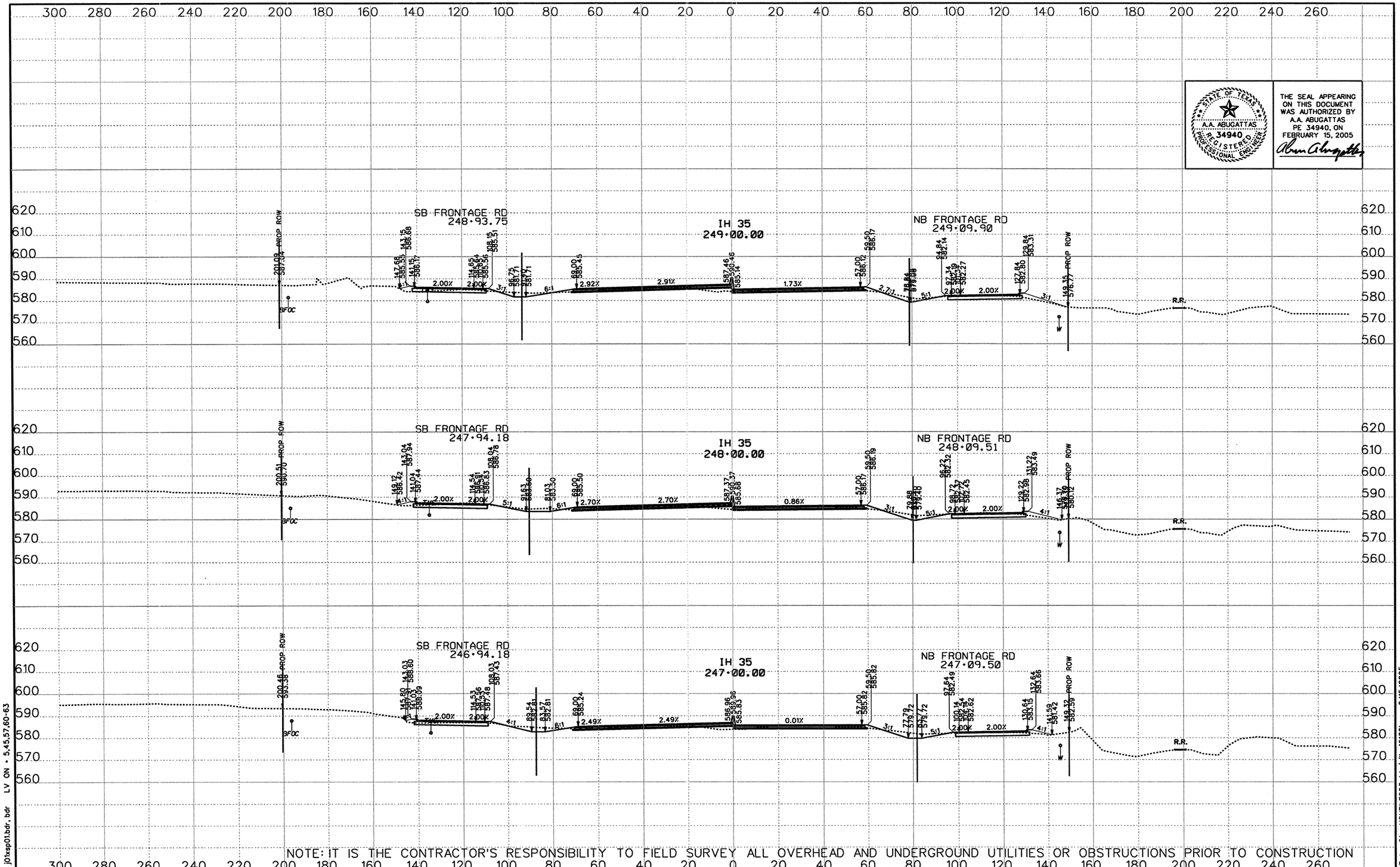

NOTE: IT IS THE CONTRACTOR'S RESPONSIBILITY TO FIELD SURVEY ALL OVERHEAD AND UNDERGROUND UTILITIES OR OBSTRUCTIONS PRIOR TO CONSTRUCTION

STATE OF TEXAS
A.A. ABUGATTAS
34940
REGISTERED PROFESSIONAL ENGINEER

THE SEAL APPEARING ON THIS DOCUMENT WAS AUTHORIZED BY A.A. ABUGATTAS PE 34940, ON FEBRUARY 15, 2005

DATE	BY	REV

©2003 Texas Department of Transportation

KBR
Engineered by KBR Technical Services, Inc

SCALE:
1" = 40' HORIZ
1" = 40' VERT
0 ½ 1"

IH 35
LOOP 20 TO UNIROYAL ROAD
PROPOSED CROSS SECTIONS

STATE PROJECT NO			FED RD DIV NO		COUNTY	SHEET 33 OF 104
NH-2002 (79)			6		WEBB	
STATE	DIST NO	CONT	SECT	JOB	HIGHWAY NO	SHEET NO
TEXAS	LAREDO	0018	05	062, ETC	IH 35	914

REF FILE(S): j01xsp01.bdr, bdr LV ON = 5,45,57,60-63

XS ROLL PLOT.dgn-01 HOUFILE023 \hcivil\cf0130\ 2/15/2005

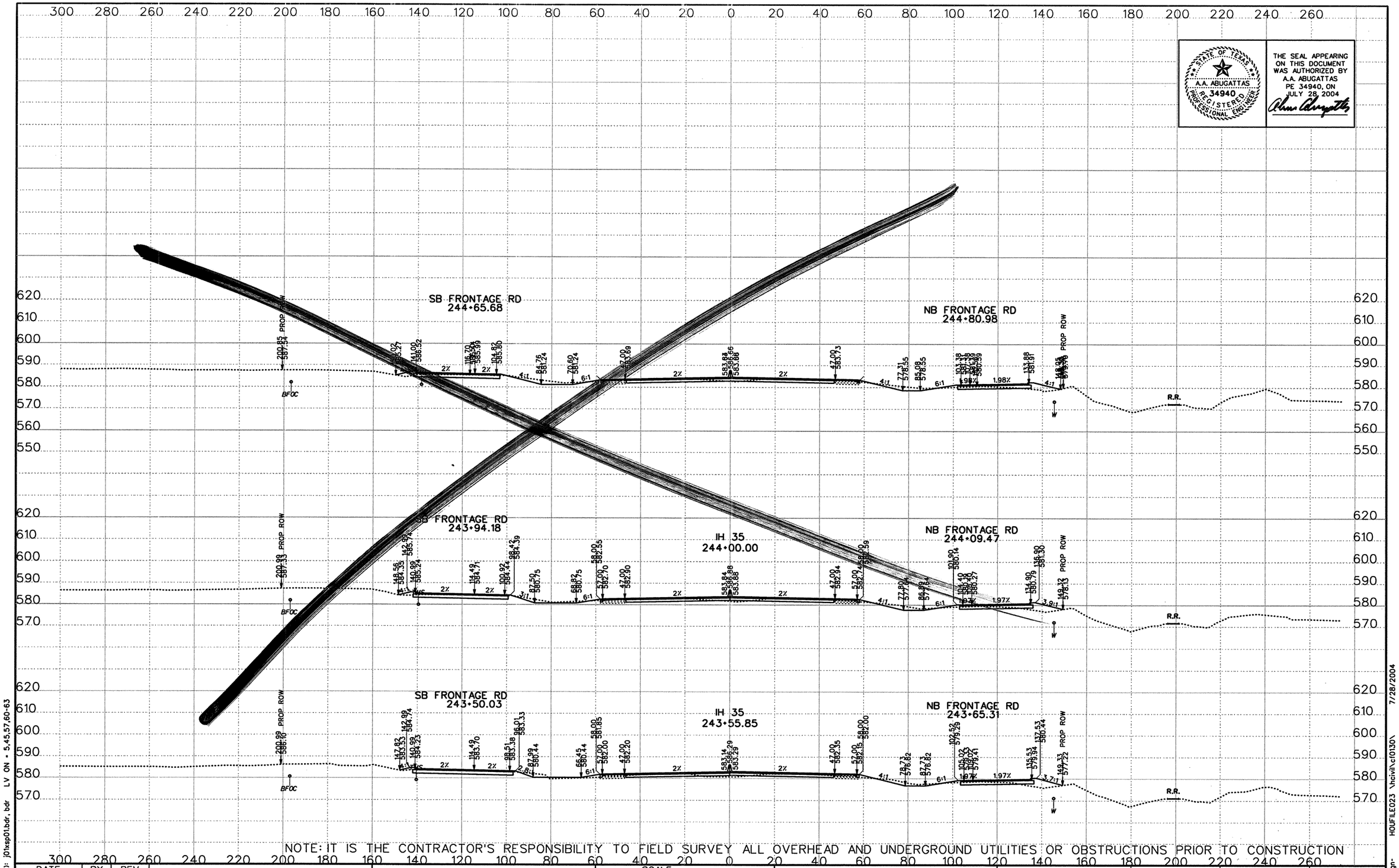

STATE OF TEXAS
A.A. ABUGATTAS
34940
REGISTERED PROFESSIONAL ENGINEER

THE SEAL APPEARING ON THIS DOCUMENT WAS AUTHORIZED BY A.A. ABUGATTAS PE 34940, ON JULY 28, 2004

NOTE: IT IS THE CONTRACTOR'S RESPONSIBILITY TO FIELD SURVEY ALL OVERHEAD AND UNDERGROUND UTILITIES OR OBSTRUCTIONS PRIOR TO CONSTRUCTION

DATE	BY	REV

©2003 Texas Department of Transportation

KBR
Engineered by KBR Technical Services, Inc

SCALE:
1" = 40' HORIZ
1" = 40' VERT
0 1/2 1"

IH 35
LOOP 20 TO UNIROYAL ROAD
PROPOSED CROSS SECTIONS

STATE PROJECT NO			FED RD DIV NO		COUNTY	SHEET 34 OF 104
NH-2002 (79)			6		WEBB	
STATE	DIST NO	CONT	SECT	JOB	HIGHWAY NO	SHEET NO
TEXAS	LAREDO	0018	05	062, ETC	IH 35	915

REF FILE(S): j01xsp01.bdr, bdr LV ON = 5,45,57,60-63

XS ROLL .dgn- HOUFILE023 \hcivil\cf0130\ 7/28/2004

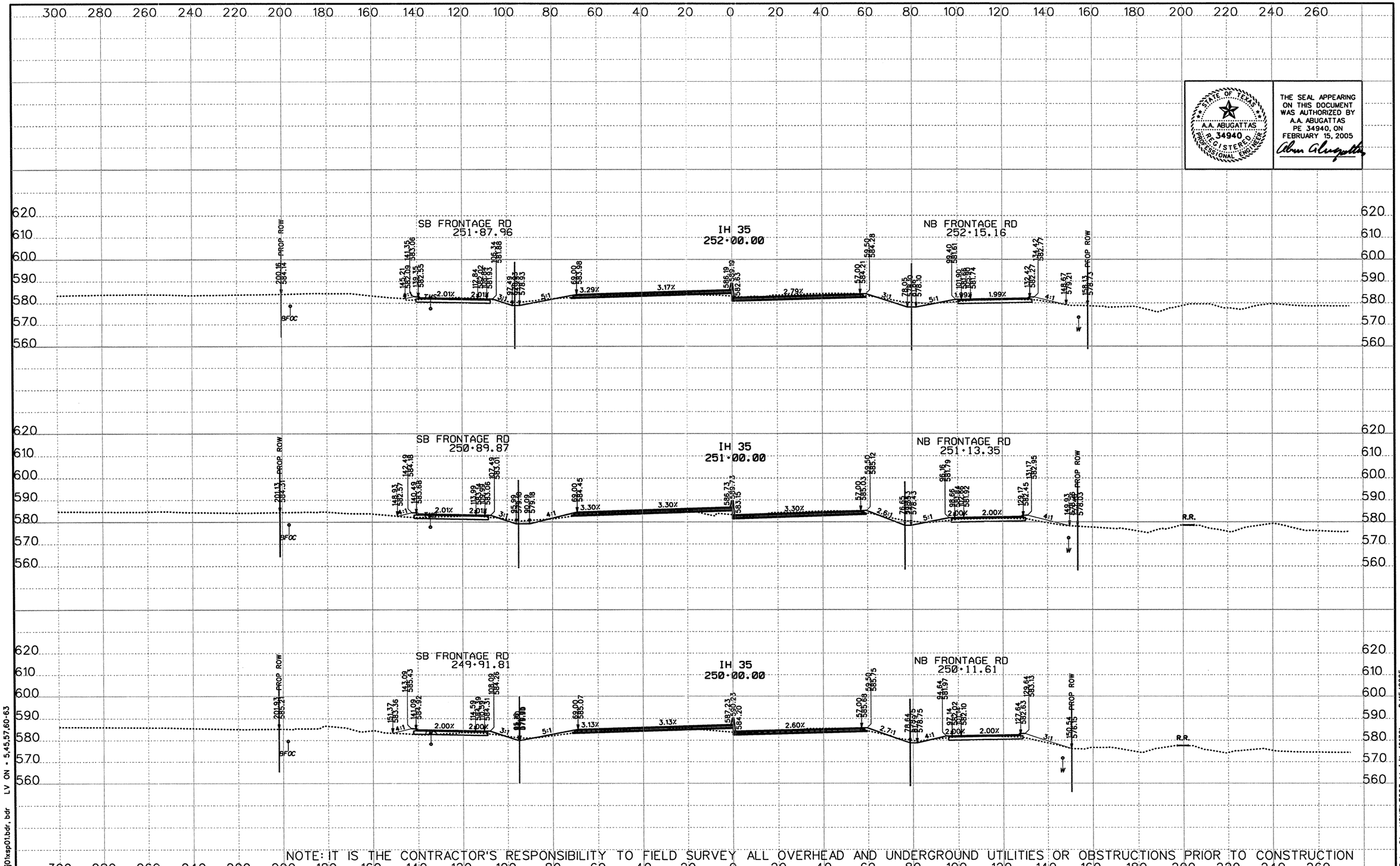

STATE OF TEXAS
A.A. ABUGATTAS
34940
REGISTERED PROFESSIONAL ENGINEER

THE SEAL APPEARING ON THIS DOCUMENT WAS AUTHORIZED BY A.A. ABUGATTAS PE 34940, ON FEBRUARY 15, 2005

DATE	BY	REV

©2003 Texas Department of Transportation

KBR
Engineered by KBR Technical Services, Inc

SCALE:
1" = 40' HORIZ
1" = 40' VERT
0 ½ 1"

IH 35
LOOP 20 TO UNIROYAL ROAD
PROPOSED CROSS SECTIONS

STATE PROJECT NO			FED RD DIV NO		COUNTY	SHEET 34 OF 104
NH-2002 (79)			6		WEBB	
STATE	DIST NO	CONT	SECT	JOB	HIGHWAY NO	SHEET NO
TEXAS	LAREDO	0018	05	062, ETC	IH 35	915

REF FILE(S): j01xsp01.bdr, bdr LV ON = 5,45,57,60-63

XS ROLL PLOT.dgn-01 HOUFILE023 \hcivil\cf0130\ 2/15/2005

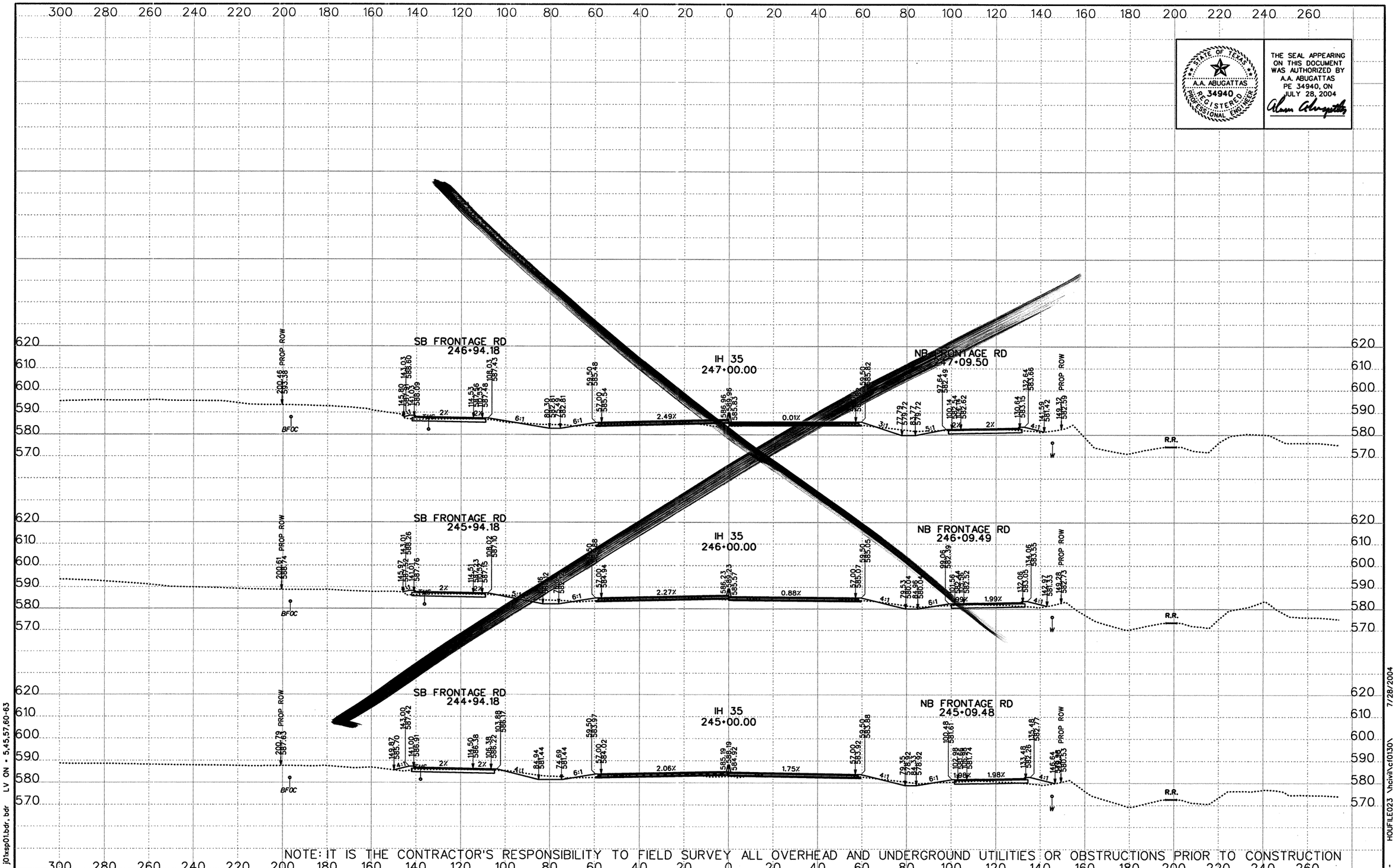

STATE OF TEXAS
A.A. ABUGATTAS
34940
REGISTERED PROFESSIONAL ENGINEER

THE SEAL APPEARING ON THIS DOCUMENT WAS AUTHORIZED BY A.A. ABUGATTAS PE 34940, ON JULY 28, 2004

NOTE: IT IS THE CONTRACTOR'S RESPONSIBILITY TO FIELD SURVEY ALL OVERHEAD AND UNDERGROUND UTILITIES OR OBSTRUCTIONS PRIOR TO CONSTRUCTION

DATE	BY	REV

©2003 Texas Department of Transportation

KBR
Engineered by KBR Technical Services, Inc

SCALE:
1" = 40' HORIZ
1" = 40' VERT
0 ½ 1"

IH 35
LOOP 20 TO UNIROYAL ROAD
PROPOSED CROSS SECTIONS

STATE PROJECT NO			FED RD DIV NO		COUNTY	SHEET 35 OF 104
NH-2002 (79)			6		WEBB	
STATE	DIST NO	CONT	SECT	JOB	HIGHWAY NO	SHEET NO
TEXAS	LAREDO	0018	05	062, ETC	IH 35	916

REF FILE(S): j01xsp01.bdr, bdr LV ON = 5,45,57,60-63

XS ROLL .dgn- HOUFILE023 \hcivil\c(0130\ 7/28/2004

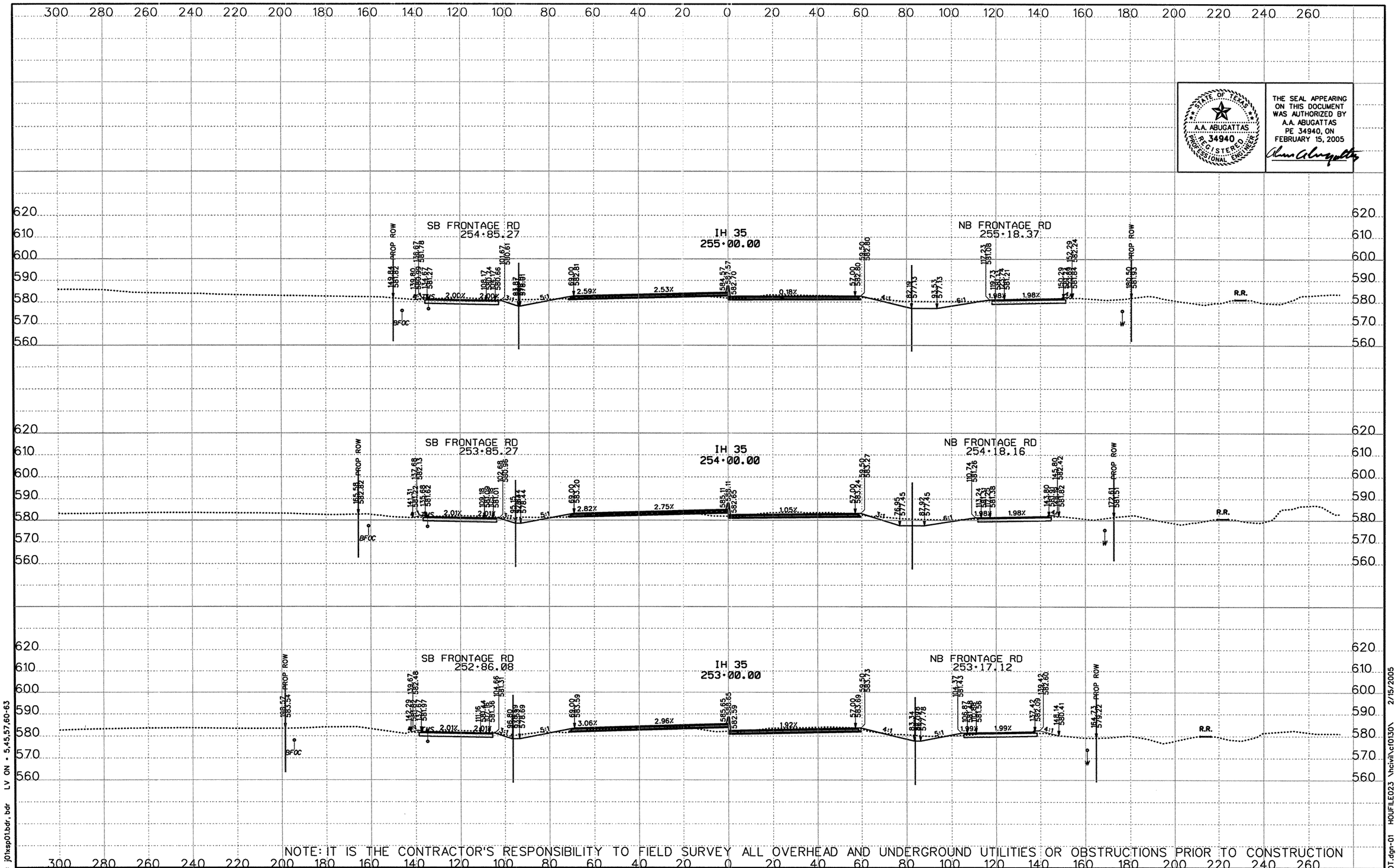

STATE OF TEXAS
A.A. ABUGATTAS
34940
REGISTERED PROFESSIONAL ENGINEER

THE SEAL APPEARING ON THIS DOCUMENT WAS AUTHORIZED BY A.A. ABUGATTAS PE 34940, ON FEBRUARY 15, 2005

NOTE: IT IS THE CONTRACTOR'S RESPONSIBILITY TO FIELD SURVEY ALL OVERHEAD AND UNDERGROUND UTILITIES OR OBSTRUCTIONS PRIOR TO CONSTRUCTION

DATE	BY	REV

©2003 Texas Department of Transportation

KBR
Engineered by KBR Technical Services, Inc

SCALE:
1" = 40' HORIZ
1" = 40' VERT
0 1/2 1"

IH 35
LOOP 20 TO UNIROYAL ROAD
PROPOSED CROSS SECTIONS

STATE PROJECT NO			FED RD DIV NO		COUNTY	SHEET 35 OF 104
NH-2002 (79)			6		WEBB	
STATE	DIST NO	CONT	SECT	JOB	HIGHWAY NO	SHEET NO
TEXAS	LAREDO	0018	05	062, ETC	IH 35	916

REF FILE(S): j01xsp01.bdr, bdr LV ON = 5,45,57,60-63

XS ROLL PLOT.dgn-01 HOUFILE023 \hcivil\cf0130\ 2/15/2005

STATE OF TEXAS
A.A. ABUGATTAS
34940
REGISTERED PROFESSIONAL ENGINEER

THE SEAL APPEARING ON THIS DOCUMENT WAS AUTHORIZED BY A.A. ABUGATTAS PE 34940, ON JULY 28, 2004

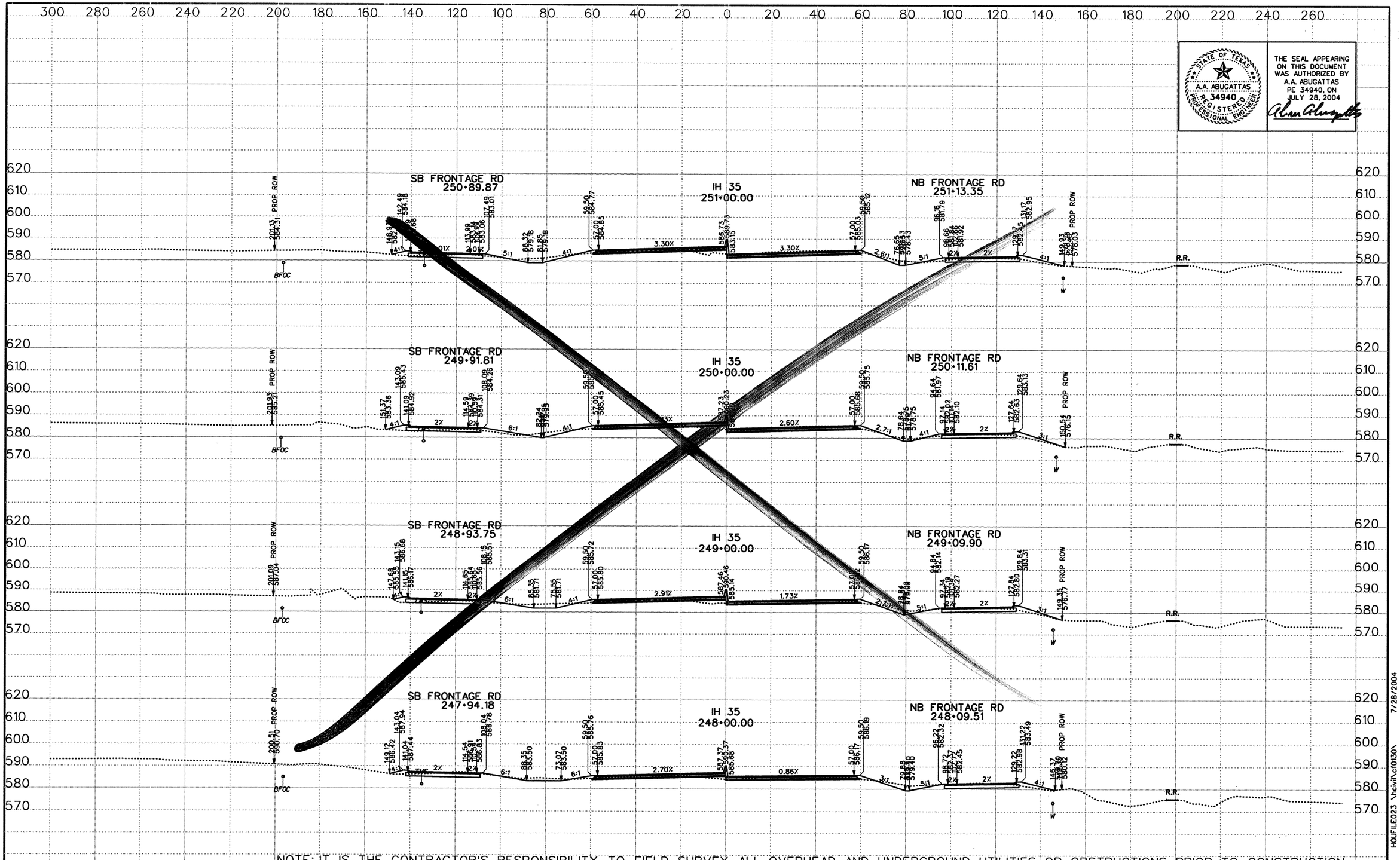

NOTE: IT IS THE CONTRACTOR'S RESPONSIBILITY TO FIELD SURVEY ALL OVERHEAD AND UNDERGROUND UTILITIES OR OBSTRUCTIONS PRIOR TO CONSTRUCTION

DATE	BY	REV

©2003 Texas Department of Transportation

KBR
Engineered by KBR Technical Services, Inc

SCALE:
1" = 40' HORIZ
1" = 40' VERT
0 ½ 1"

IH 35
LOOP 20 TO UNIROYAL ROAD
PROPOSED CROSS SECTIONS

STATE PROJECT NO			FED RD DIV NO		COUNTY	SHEET 36 OF 104
NH-2002 (79)			6		WEBB	
STATE	DIST NO	CONT	SECT	JOB	HIGHWAY NO	SHEET NO
TEXAS	LAREDO	0018	05	062, ETC	IH 35	917

REF FILE(S): j01xsp01.bdr, bdr LV ON = 5,45,57,60-63

HOUFILE023 \hcivil\cf0130\ 7/28/2004

XS ROLL .dgn-

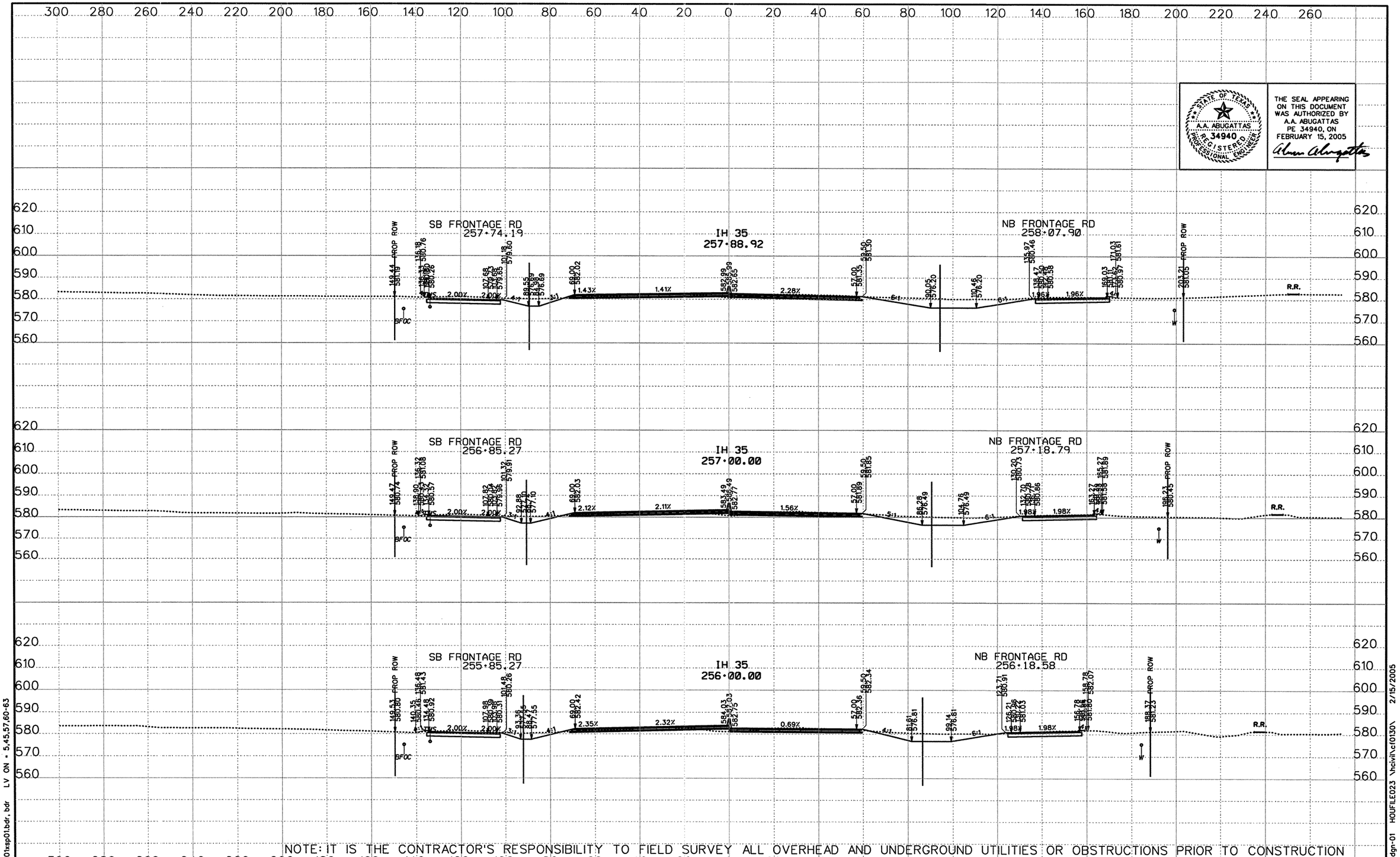

STATE OF TEXAS
A.A. ABUGATTAS
34940
REGISTERED PROFESSIONAL ENGINEER

THE SEAL APPEARING ON THIS DOCUMENT WAS AUTHORIZED BY A.A. ABUGATTAS PE 34940, ON FEBRUARY 15, 2005

NOTE: IT IS THE CONTRACTOR'S RESPONSIBILITY TO FIELD SURVEY ALL OVERHEAD AND UNDERGROUND UTILITIES OR OBSTRUCTIONS PRIOR TO CONSTRUCTION

DATE	BY	REV

©2003 Texas Department of Transportation

KBR
Engineered by KBR Technical Services, Inc

SCALE:
1" = 40' HORIZ
1" = 40' VERT
0 ½ 1"

IH 35
LOOP 20 TO UNIROYAL ROAD
PROPOSED CROSS SECTIONS

STATE PROJECT NO			FED RD DIV NO		COUNTY	SHEET 36 OF 104
NH-2002 (79)			6		WEBB	
STATE	DIST NO	CONT	SECT	JOB	HIGHWAY NO	SHEET NO
TEXAS	LAREDO	0018	05	062, ETC	IH 35	917

REF FILE(S): j01xsp01.bdr, bdr LV ON = 5,45,57,60-63

XS ROLL PLOT.dgn-01 HOUFILE023 \hcivil\xc10130\ 2/15/2005

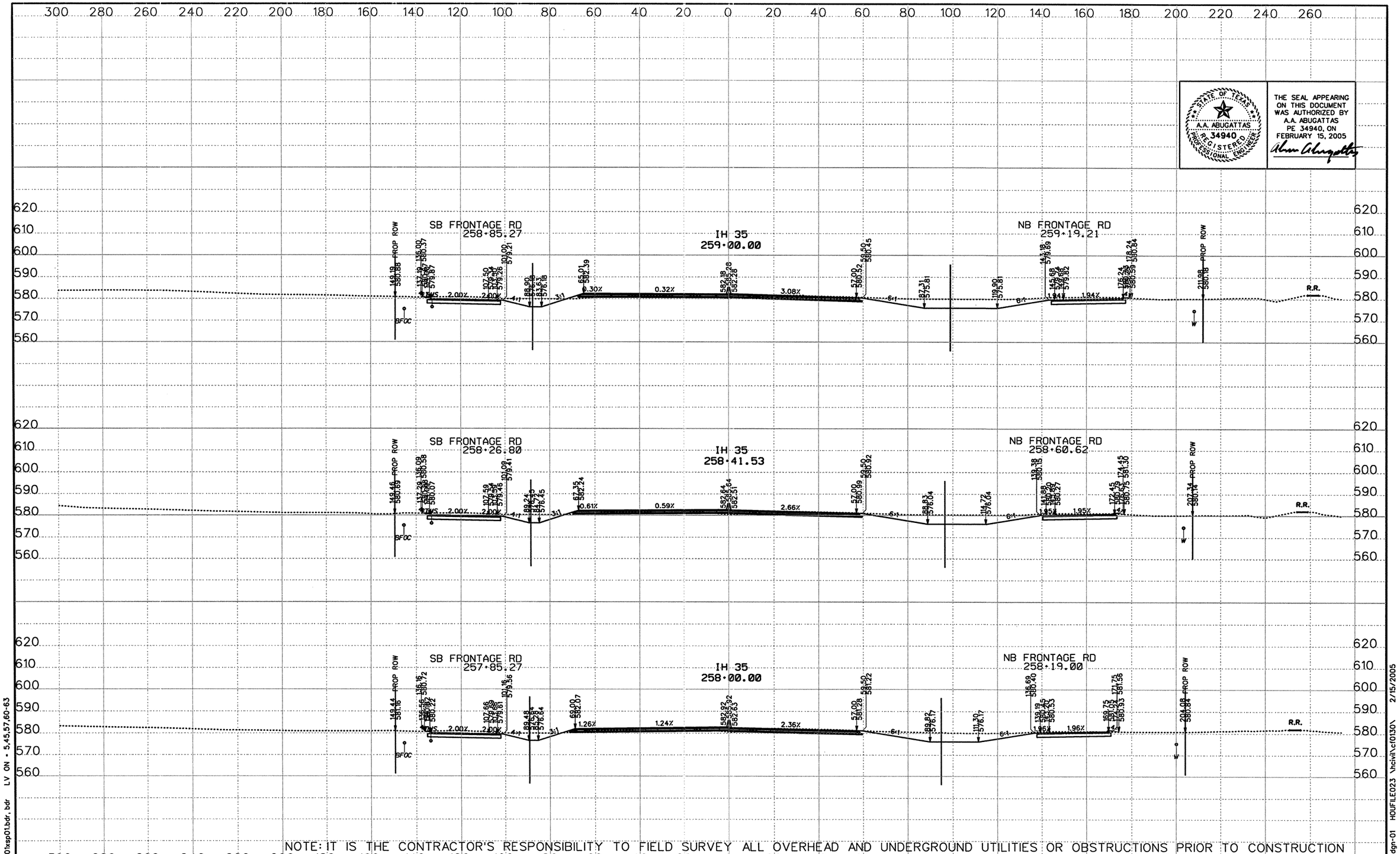

STATE OF TEXAS
A.A. ABUGATTAS
34940
REGISTERED PROFESSIONAL ENGINEER

THE SEAL APPEARING ON THIS DOCUMENT WAS AUTHORIZED BY A.A. ABUGATTAS PE 34940, ON FEBRUARY 15, 2005

NOTE: IT IS THE CONTRACTOR'S RESPONSIBILITY TO FIELD SURVEY ALL OVERHEAD AND UNDERGROUND UTILITIES OR OBSTRUCTIONS PRIOR TO CONSTRUCTION

DATE	BY	REV

©2003 Texas Department of Transportation

KBR
Engineered by KBR Technical Services, Inc

SCALE:
1" = 40' HORIZ
1" = 40' VERT
0 ½ 1"

IH 35
LOOP 20 TO UNIROYAL ROAD
PROPOSED CROSS SECTIONS

STATE PROJECT NO			FED RD DIV NO		COUNTY	SHEET 36A OF 104
NH-2002 (79)			6		WEBB	
STATE	DIST NO	CONT	SECT	JOB	HIGHWAY NO	SHEET NO
TEXAS	LAREDO	0018	05	062, ETC	IH 35	917 A

REF FILE(S): j01xsp01.bdr, bdr LV ON = 5,45,57,60-63

XS ROLL PLOT.dgn-01 HOUFILE023 \hcivil\cf0130\ 2/15/2005

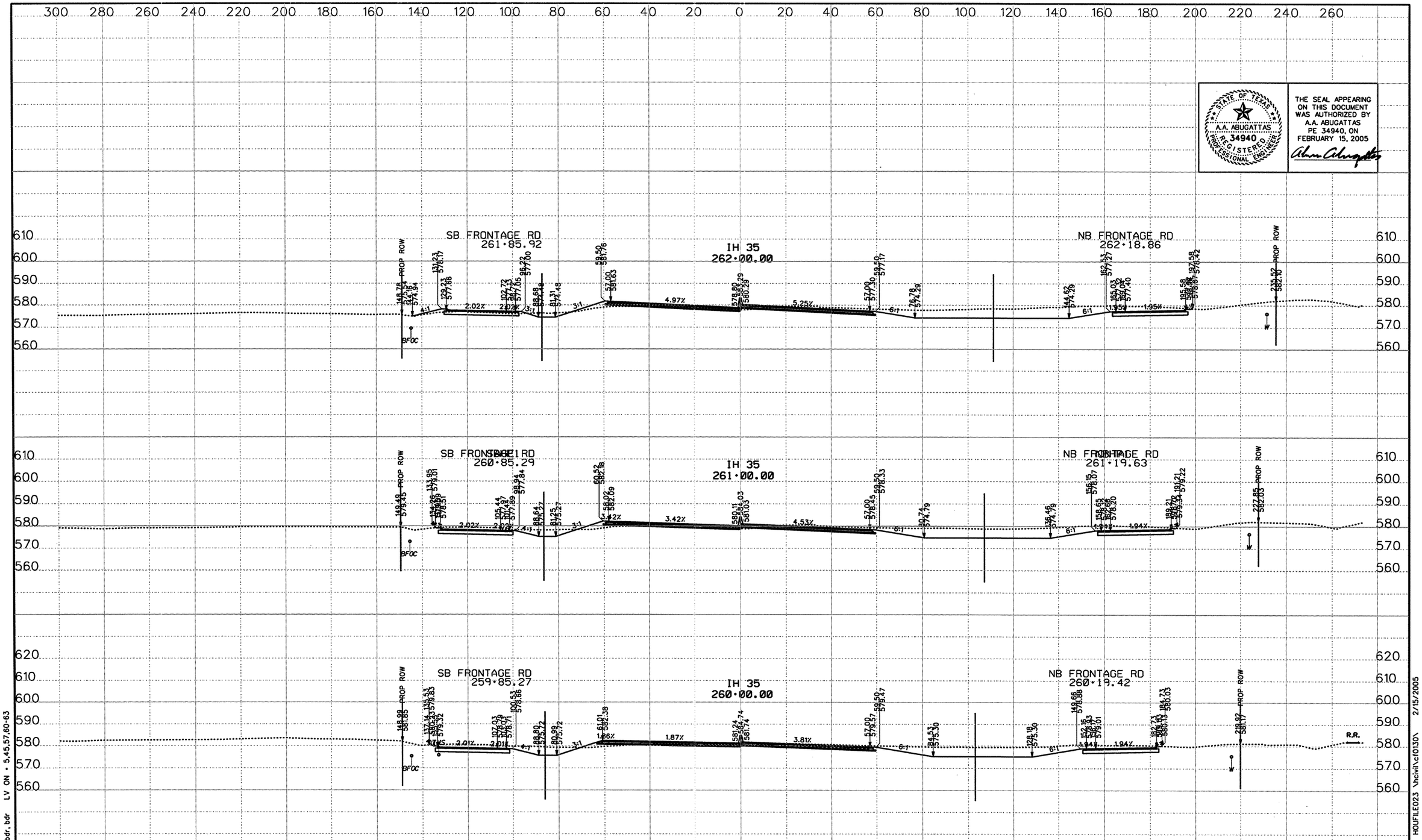

STATE OF TEXAS
A.A. ABUGATTAS
34940
REGISTERED PROFESSIONAL ENGINEER

THE SEAL APPEARING ON THIS DOCUMENT WAS AUTHORIZED BY A.A. ABUGATTAS PE 34940, ON FEBRUARY 15, 2005

NOTE: IT IS THE CONTRACTOR'S RESPONSIBILITY TO FIELD SURVEY ALL OVERHEAD AND UNDERGROUND UTILITIES OR OBSTRUCTIONS PRIOR TO CONSTRUCTION

DATE	BY	REV

©2003 Texas Department of Transportation

KBR
Engineered by KBR Technical Services, Inc

SCALE:
1" = 40' HORIZ
1" = 40' VERT
0 ½ 1"

IH 35
LOOP 20 TO UNIROYAL ROAD
PROPOSED CROSS SECTIONS

STATE PROJECT NO			FED RD DIV NO		COUNTY	SHEET 36B OF 104
NH-2002 (79)			6		WEBB	
STATE	DIST NO	CONT	SECT	JOB	HIGHWAY NO	SHEET NO
TEXAS	LAREDO	0018	05	062, ETC	IH 35	917B

REF FILE(S): j01xsp01.bdr, bdr LV ON = 5,45,57,60-63

XS ROLL PLOT.dgn-01 HOUFILE023 \hcivil\cf0130\ 2/15/2005

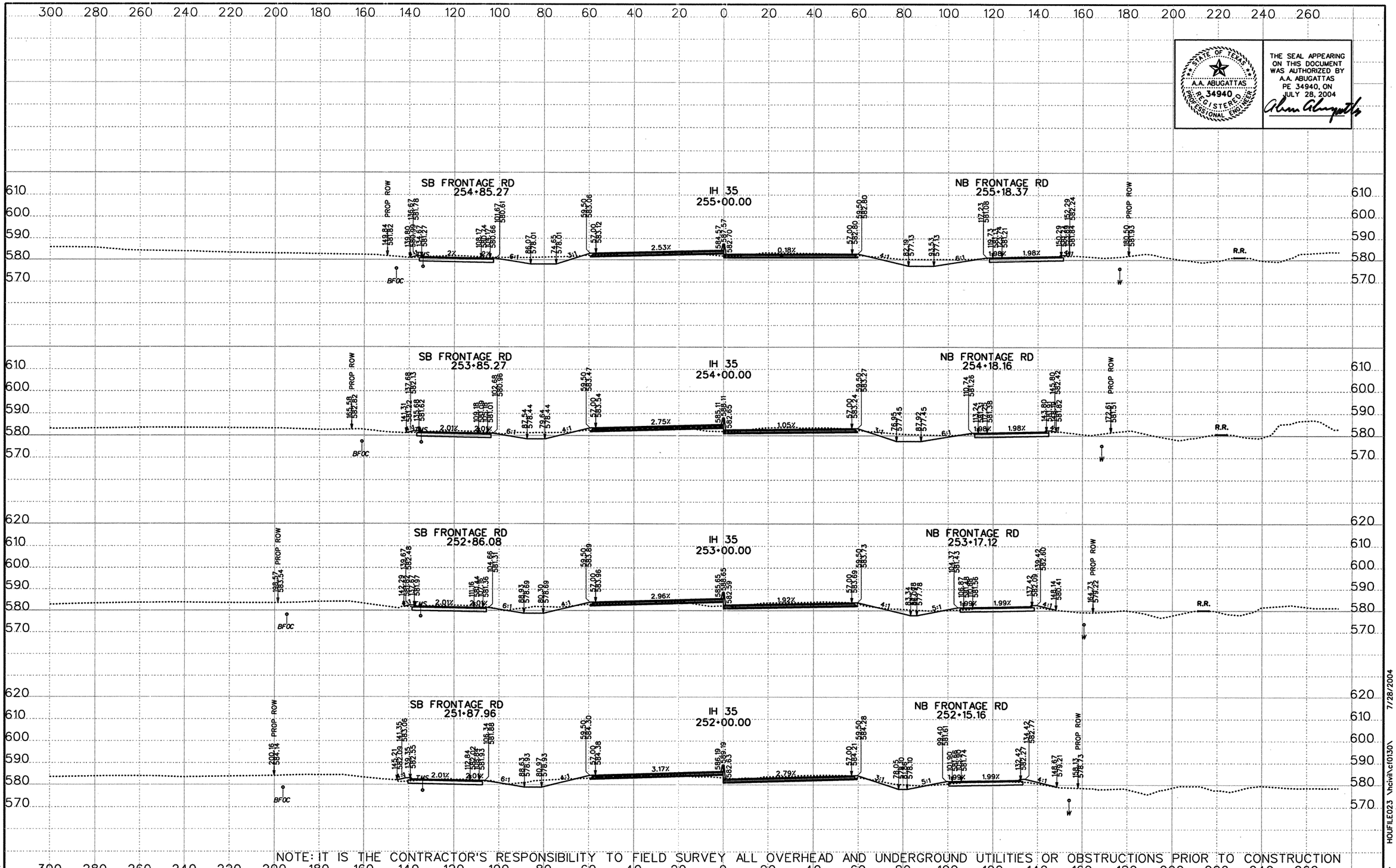

STATE OF TEXAS
A.A. ABUGATTAS
34940
REGISTERED PROFESSIONAL ENGINEER

THE SEAL APPEARING ON THIS DOCUMENT WAS AUTHORIZED BY A.A. ABUGATTAS PE 34940, ON JULY 28, 2004

NOTE: IT IS THE CONTRACTOR'S RESPONSIBILITY TO FIELD SURVEY ALL OVERHEAD AND UNDERGROUND UTILITIES OR OBSTRUCTIONS PRIOR TO CONSTRUCTION

DATE	BY	REV

©2003 Texas Department of Transportation

KBR
Engineered by KBR Technical Services, Inc

SCALE:
1" = 40' HORIZ
1" = 40' VERT
0 1/2 1"

IH 35
LOOP 20 TO UNIROYAL ROAD
PROPOSED CROSS SECTIONS

STATE PROJECT NO			FED RD DIV NO		COUNTY	SHEET 37 OF 104
NH-2002 (79)			6		WEBB	
STATE	DIST NO	CONT	SECT	JOB	HIGHWAY NO	SHEET NO
TEXAS	LAREDO	0018	05	062, ETC	IH 35	918

REF FILE(S): j01xsp01.bdr, bdr LV ON = 5,45,57,60-63

XS ROLL .dgn- HOUFILE023 \hcivil\cf0130\ 7/28/2004

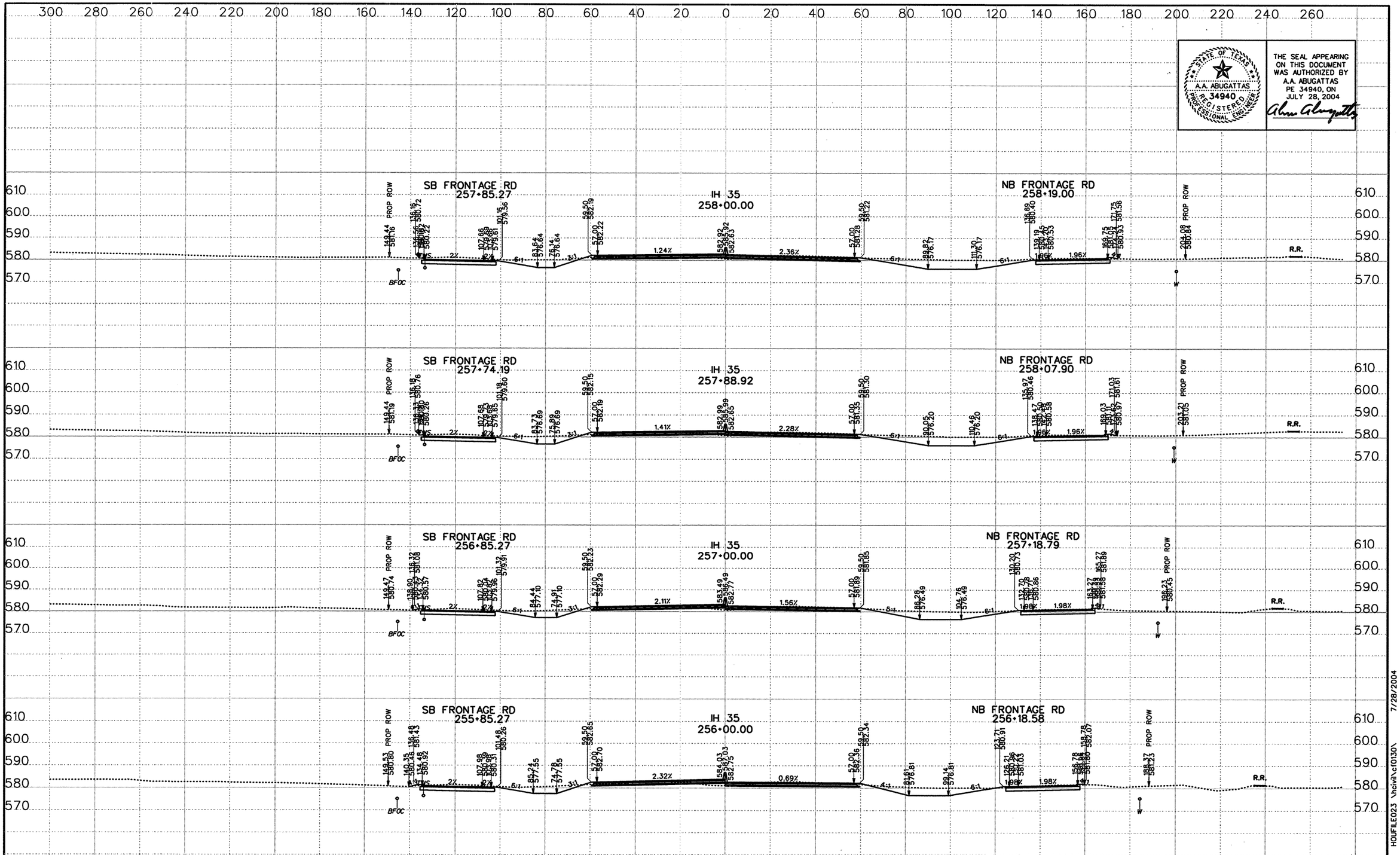

STATE OF TEXAS
A.A. ABUGATTAS
PE 34940
REGISTERED PROFESSIONAL ENGINEER

THE SEAL APPEARING ON THIS DOCUMENT WAS AUTHORIZED BY A.A. ABUGATTAS PE 34940, ON JULY 28, 2004

NOTE: IT IS THE CONTRACTOR'S RESPONSIBILITY TO FIELD SURVEY ALL OVERHEAD AND UNDERGROUND UTILITIES OR OBSTRUCTIONS PRIOR TO CONSTRUCTION

DATE	BY	REV

©2003 Texas Department of Transportation

KBR
Engineered by KBR Technical Services, Inc

SCALE:
1" = 40' HORIZ
1" = 40' VERT
0 1/2 1"

IH 35
LOOP 20 TO UNIROYAL ROAD
PROPOSED CROSS SECTIONS

STATE PROJECT NO			FED RD DIV NO		COUNTY	SHEET 38 OF 104
NH-2002 (79)			6		WEBB	
STATE	DIST NO	CONT	SECT	JOB	HIGHWAY NO	SHEET NO
TEXAS	LAREDO	0018	05	062, ETC	IH 35	919

REF FILE(S): j01xsp01.bdr, bdr LV ON = 5,45,57,60-63

XS ROLL .dgn- HOUFILE023 \hcivil\cf0130\ 7/28/2004

STATE OF TEXAS
A.A. ABUGATTAS
34940
REGISTERED PROFESSIONAL ENGINEER

THE SEAL APPEARING ON THIS DOCUMENT WAS AUTHORIZED BY A.A. ABUGATTAS PE 34940, ON JULY 28, 2004

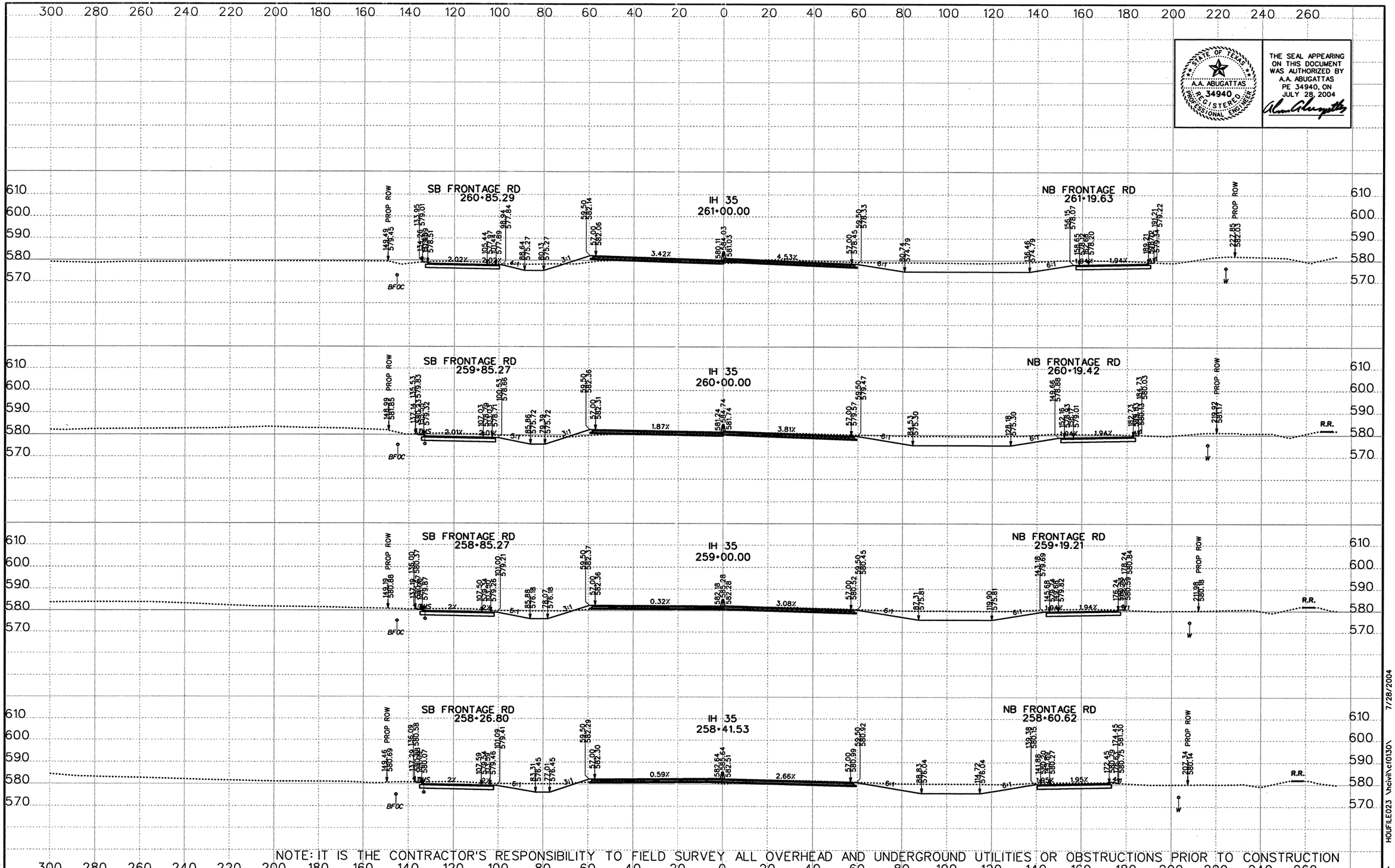

NOTE: IT IS THE CONTRACTOR'S RESPONSIBILITY TO FIELD SURVEY ALL OVERHEAD AND UNDERGROUND UTILITIES OR OBSTRUCTIONS PRIOR TO CONSTRUCTION

DATE	BY	REV

©2003 Texas Department of Transportation

KBR
Engineered by KBR Technical Services, Inc

SCALE:
1" = 40' HORIZ
1" = 40' VERT
0 1/2 1"

IH 35
LOOP 20 TO UNIROYAL ROAD
PROPOSED CROSS SECTIONS

STATE PROJECT NO			FED RD DIV NO		COUNTY	SHEET 39 OF 104
NH-2002 (79)			6		WEBB	
STATE	DIST NO	CONT	SECT	JOB	HIGHWAY NO	SHEET NO
TEXAS	LAREDO	0018	05	062, ETC	IH 35	920

REF FILE(S): j01xsp01.bdr, bdr LV ON = 5,45,57,60-63

7/28/2004 HOUFILE023 \hcivil\cf0130\ XS ROLL .dgn-

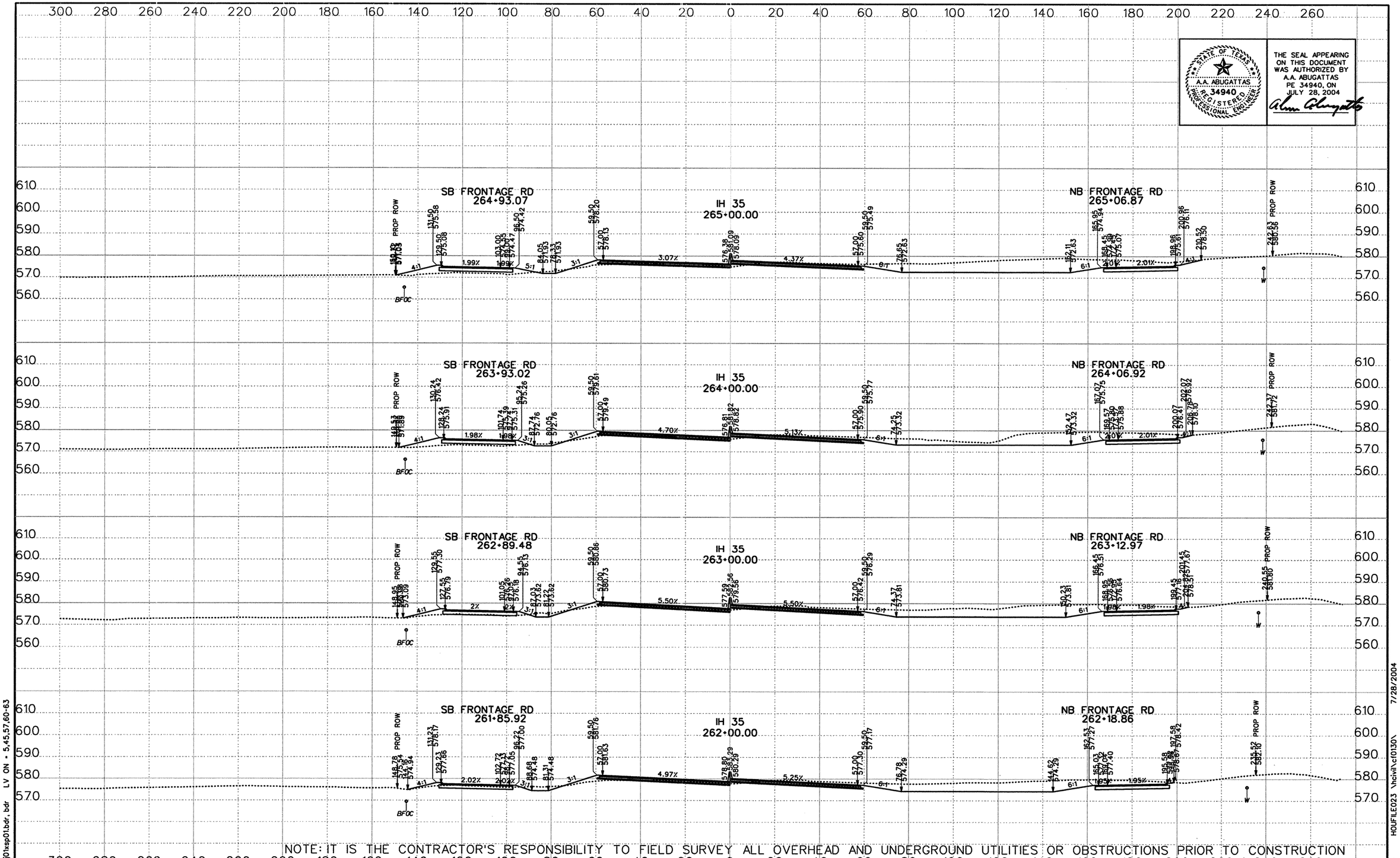

STATE OF TEXAS
A.A. ABUGATTAS
34940
REGISTERED PROFESSIONAL ENGINEER

THE SEAL APPEARING ON THIS DOCUMENT WAS AUTHORIZED BY A.A. ABUGATTAS PE 34940, ON JULY 28, 2004

NOTE: IT IS THE CONTRACTOR'S RESPONSIBILITY TO FIELD SURVEY ALL OVERHEAD AND UNDERGROUND UTILITIES OR OBSTRUCTIONS PRIOR TO CONSTRUCTION

DATE	BY	REV

©2003 Texas Department of Transportation

KBR
Engineered by KBR Technical Services, Inc

SCALE:
1" = 40' HORIZ
1" = 40' VERT
0 ½ 1"

IH 35
LOOP 20 TO UNIROYAL ROAD
PROPOSED CROSS SECTIONS

STATE PROJECT NO			FED RD DIV NO		COUNTY	SHEET 40 OF 104
NH-2002 (79)			6		WEBB	
STATE	DIST NO	CONT	SECT	JOB	HIGHWAY NO	SHEET NO
TEXAS	LAREDO	0018	05	062, ETC	IH 35	921

REF FILE(S): j01xsp01.bdr, bdr LV ON = 5,45,57,60-63

XS ROLL .dgn- HOUFILE023 \hcivil\c0130\ 7/28/2004

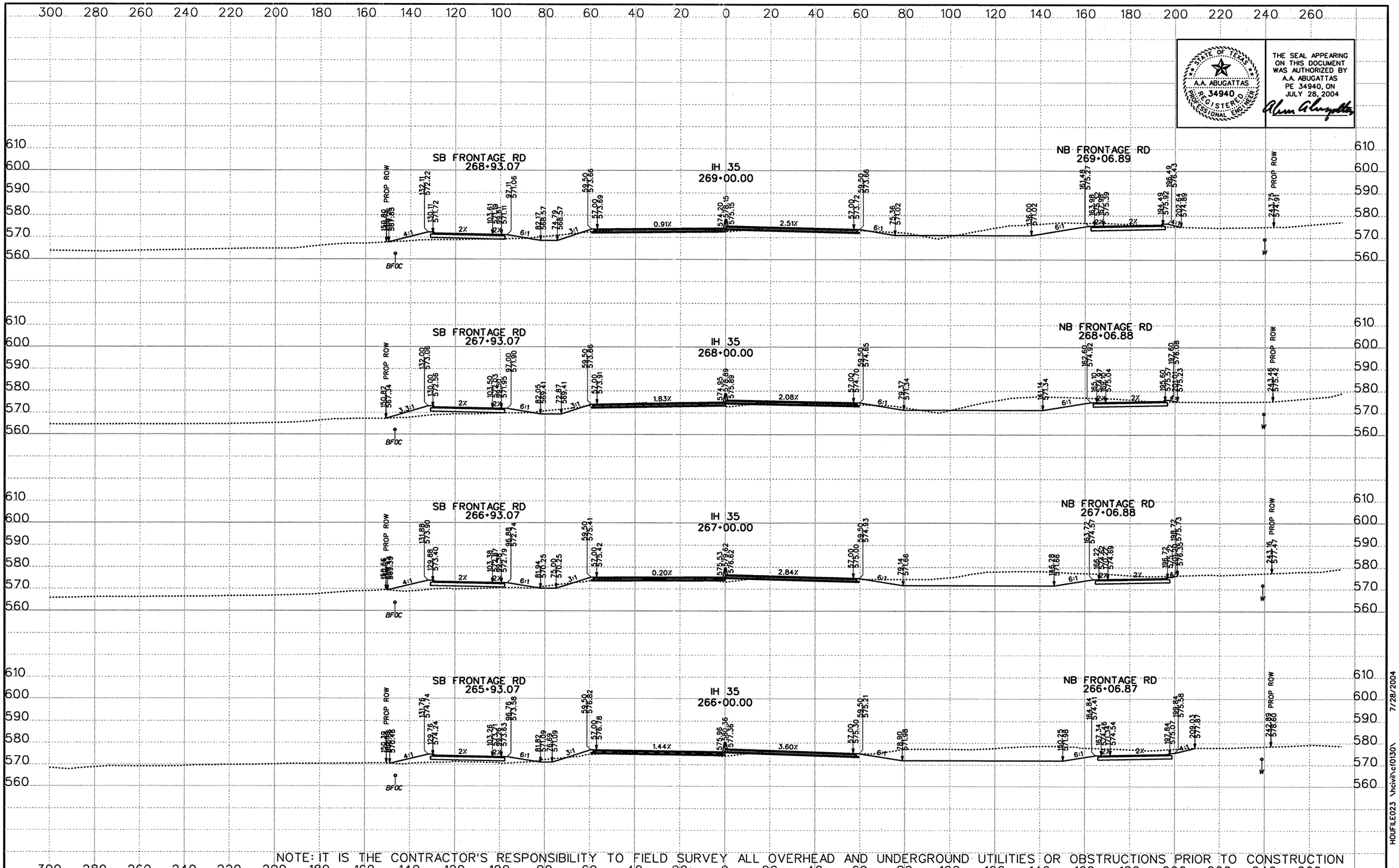

NOTE: IT IS THE CONTRACTOR'S RESPONSIBILITY TO FIELD SURVEY ALL OVERHEAD AND UNDERGROUND UTILITIES OR OBSTRUCTIONS PRIOR TO CONSTRUCTION

DATE	BY	REV

©2003 Texas Department of Transportation

KBR
Engineered by KBR Technical Services, Inc

SCALE:
1" = 40' HORIZ
1" = 40' VERT
0 ½ 1"

IH 35
LOOP 20 TO UNIROYAL ROAD
PROPOSED CROSS SECTIONS

STATE PROJECT NO			FED RD DIV NO		COUNTY	SHEET 41 OF 104
NH-2002 (79)			6		WEBB	
STATE	DIST NO	CONT	SECT	JOB	HIGHWAY NO	SHEET NO
TEXAS	LAREDO	0018	05	062, ETC	IH 35	922

REF FILE(S): j01xsp01.bdr, bdr LV ON = 5,45,57,60-63

XS ROLL .dgn- HOUFILE023 \hcivil\c(0130\ 7/28/2004

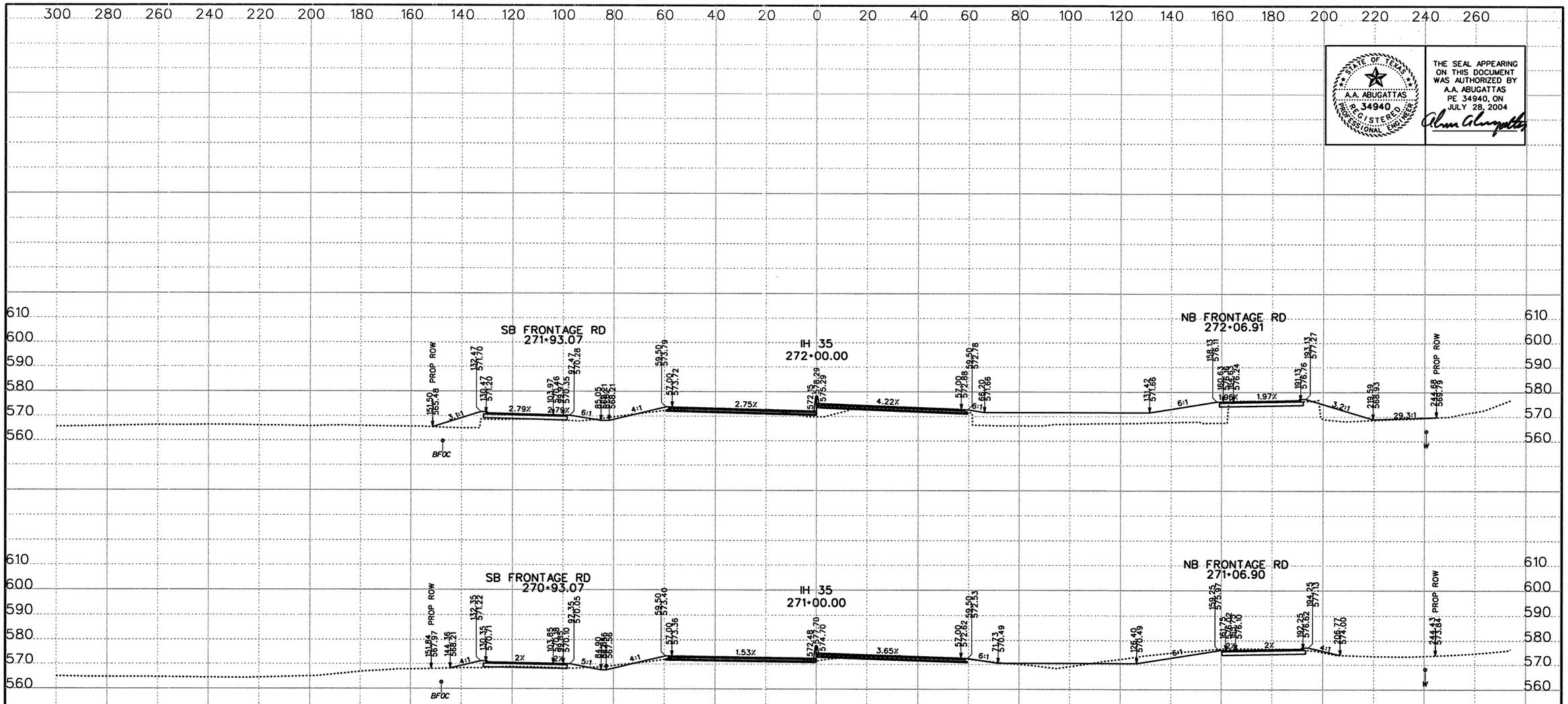

STATE OF TEXAS
A.A. ABUGATTAS
34940
REGISTERED PROFESSIONAL ENGINEER

THE SEAL APPEARING ON THIS DOCUMENT WAS AUTHORIZED BY A.A. ABUGATTAS PE 34940, ON JULY 28, 2004

NOTE: IT IS THE CONTRACTOR'S RESPONSIBILITY TO FIELD SURVEY ALL OVERHEAD AND UNDERGROUND UTILITIES OR OBSTRUCTIONS PRIOR TO CONSTRUCTION

DATE	BY	REV

©2003 Texas Department of Transportation

KBR
Engineered by KBR Technical Services, Inc

SCALE:
1" = 40' HORIZ
1" = 40' VERT
0 1/2 1"

IH 35
LOOP 20 TO UNIROYAL ROAD
PROPOSED CROSS SECTIONS

STATE PROJECT NO			FED RD DIV NO		COUNTY	SHEET 42 OF 104
NH-2002 (79)			6		WEBB	
STATE	DIST NO	CONT	SECT	JOB	HIGHWAY NO	SHEET NO
TEXAS	LAREDO	0018	05	062, ETC	IH 35	923

REF FILE(S): j01xsp01.bdr, bdr LV ON = 5,45,57,60-63

XS ROLL .dgn- HOUFILE023 \hcivil\cf0130\ 7/28/2004

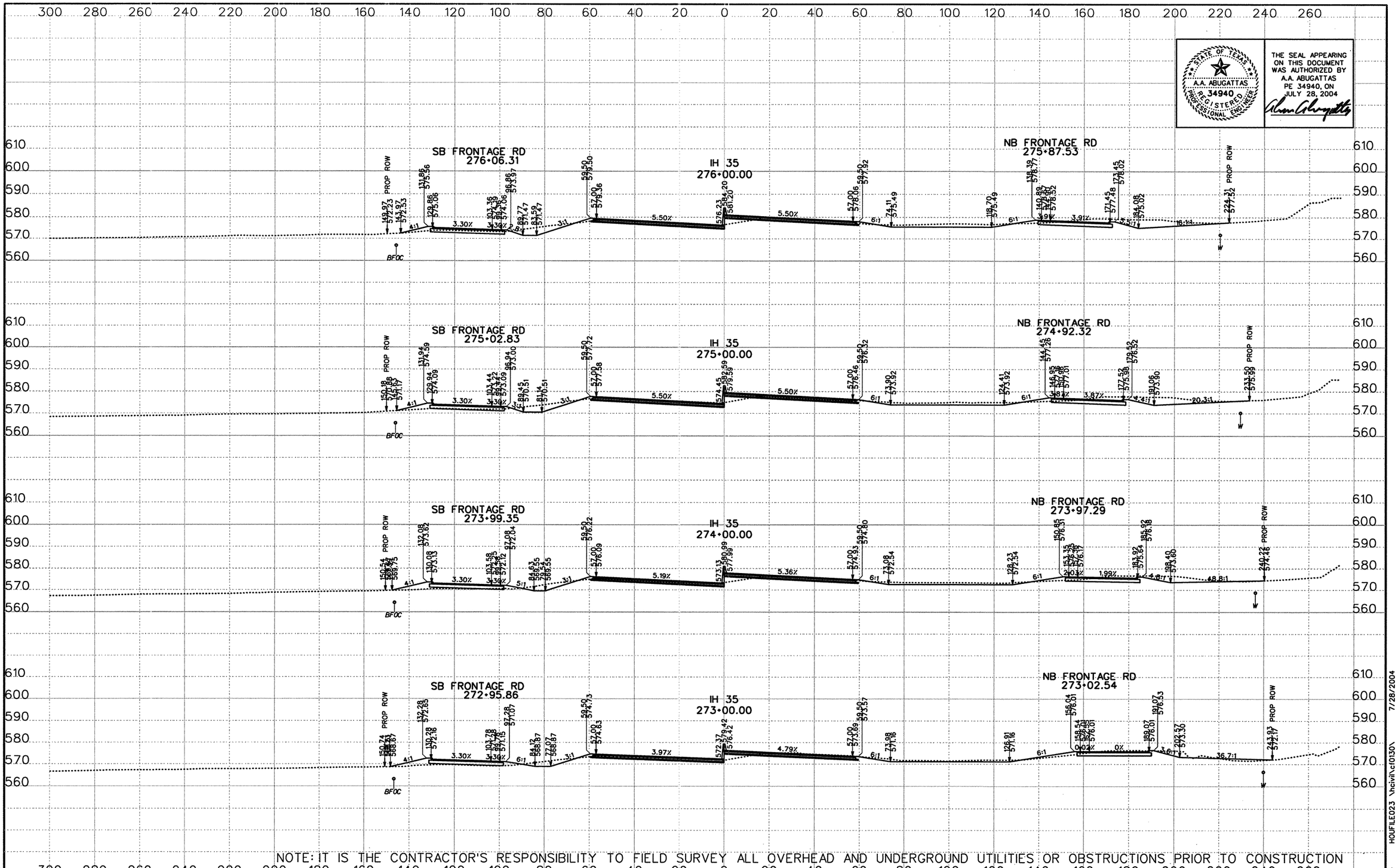

STATE OF TEXAS
A.A. ABUGATTAS
34940
REGISTERED PROFESSIONAL ENGINEER

THE SEAL APPEARING ON THIS DOCUMENT WAS AUTHORIZED BY A.A. ABUGATTAS PE 34940, ON JULY 28, 2004

NOTE: IT IS THE CONTRACTOR'S RESPONSIBILITY TO FIELD SURVEY ALL OVERHEAD AND UNDERGROUND UTILITIES OR OBSTRUCTIONS PRIOR TO CONSTRUCTION

DATE	BY	REV

©2003 Texas Department of Transportation

KBR
Engineered by KBR Technical Services, Inc

SCALE:
1" = 40' HORIZ
1" = 40' VERT
0 1/2 1"

IH 35
LOOP 20 TO UNIROYAL ROAD
PROPOSED CROSS SECTIONS

STATE PROJECT NO			FED RD DIV NO		COUNTY	SHEET 43 OF 104
NH-2002 (79)			6		WEBB	
STATE	DIST NO	CONT	SECT	JOB	HIGHWAY NO	SHEET NO
TEXAS	LAREDO	0018	05	062, ETC	IH 35	924

REF FILE(S): j01xsp01.bdr, bdr LV ON = 5,45,57,60-63

XS ROLL .dgn- HOUFILE023 \hcivil\cf0130\ 7/28/2004

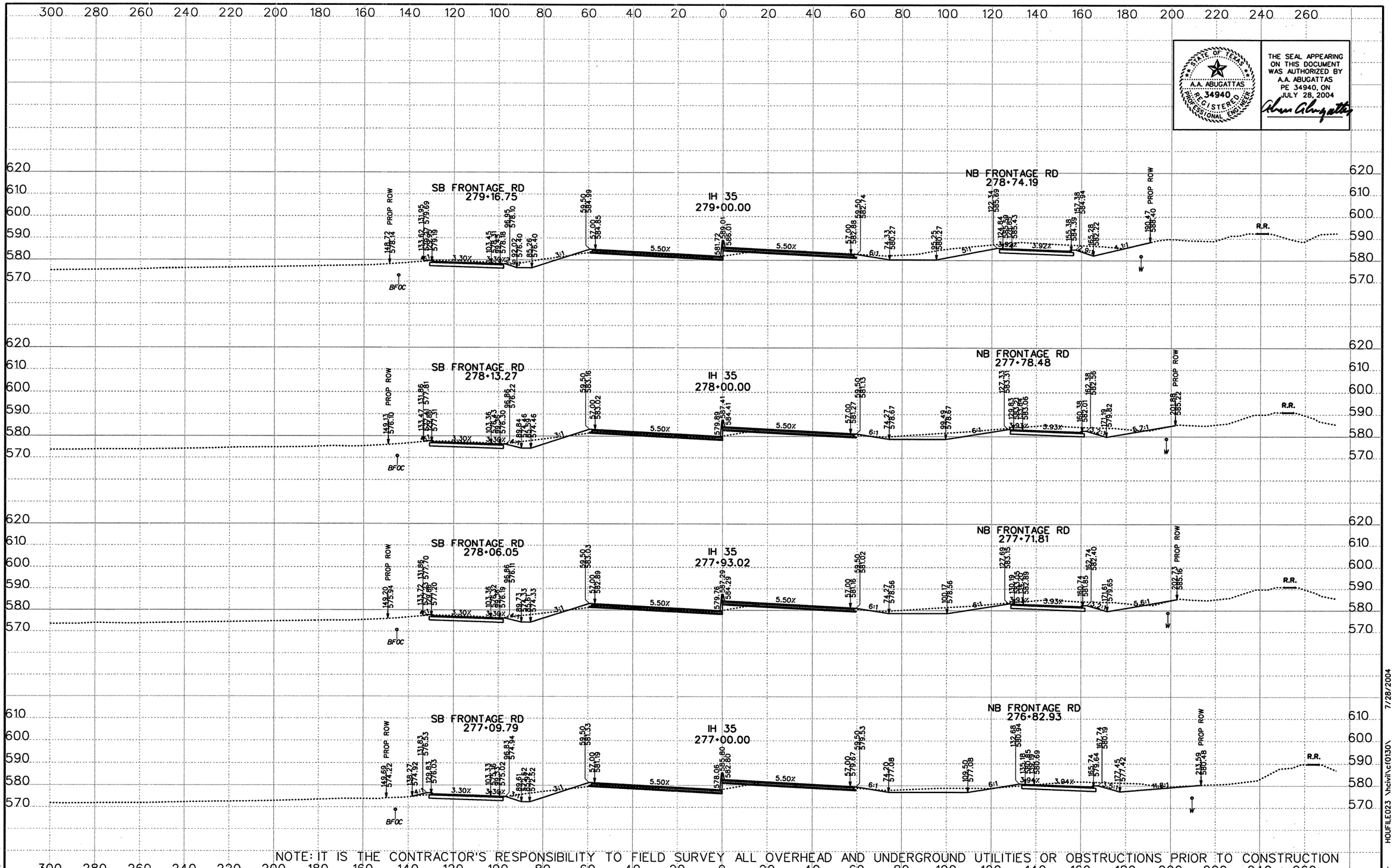

THE SEAL APPEARING ON THIS DOCUMENT WAS AUTHORIZED BY A.A. ABUGATTAS PE 34940, ON JULY 28, 2004

STATE OF TEXAS A.A. ABUGATTAS 34940 REGISTERED PROFESSIONAL ENGINEER

NOTE: IT IS THE CONTRACTOR'S RESPONSIBILITY TO FIELD SURVEY ALL OVERHEAD AND UNDERGROUND UTILITIES OR OBSTRUCTIONS PRIOR TO CONSTRUCTION

DATE	BY	REV

©2003 Texas Department of Transportation

KBR
Engineered by KBR Technical Services, Inc

SCALE:
1" = 40' HORIZ
1" = 40' VERT
0 1/2 1"

IH 35
LOOP 20 TO UNIROYAL ROAD
PROPOSED CROSS SECTIONS

STATE PROJECT NO			FED RD DIV NO		COUNTY	SHEET 44 OF 104
NH-2002 (79)			6		WEBB	
STATE	DIST NO	CONT	SECT	JOB	HIGHWAY NO	SHEET NO
TEXAS	LAREDO	0018	05	062, ETC	IH 35	925

REF FILE(S): j01xsp01.bdr, bdr LV ON = 5,45,57,60-63

XS ROLL .dgn: HOUFILE023 \hcivil\cf0130\ 7/28/2004

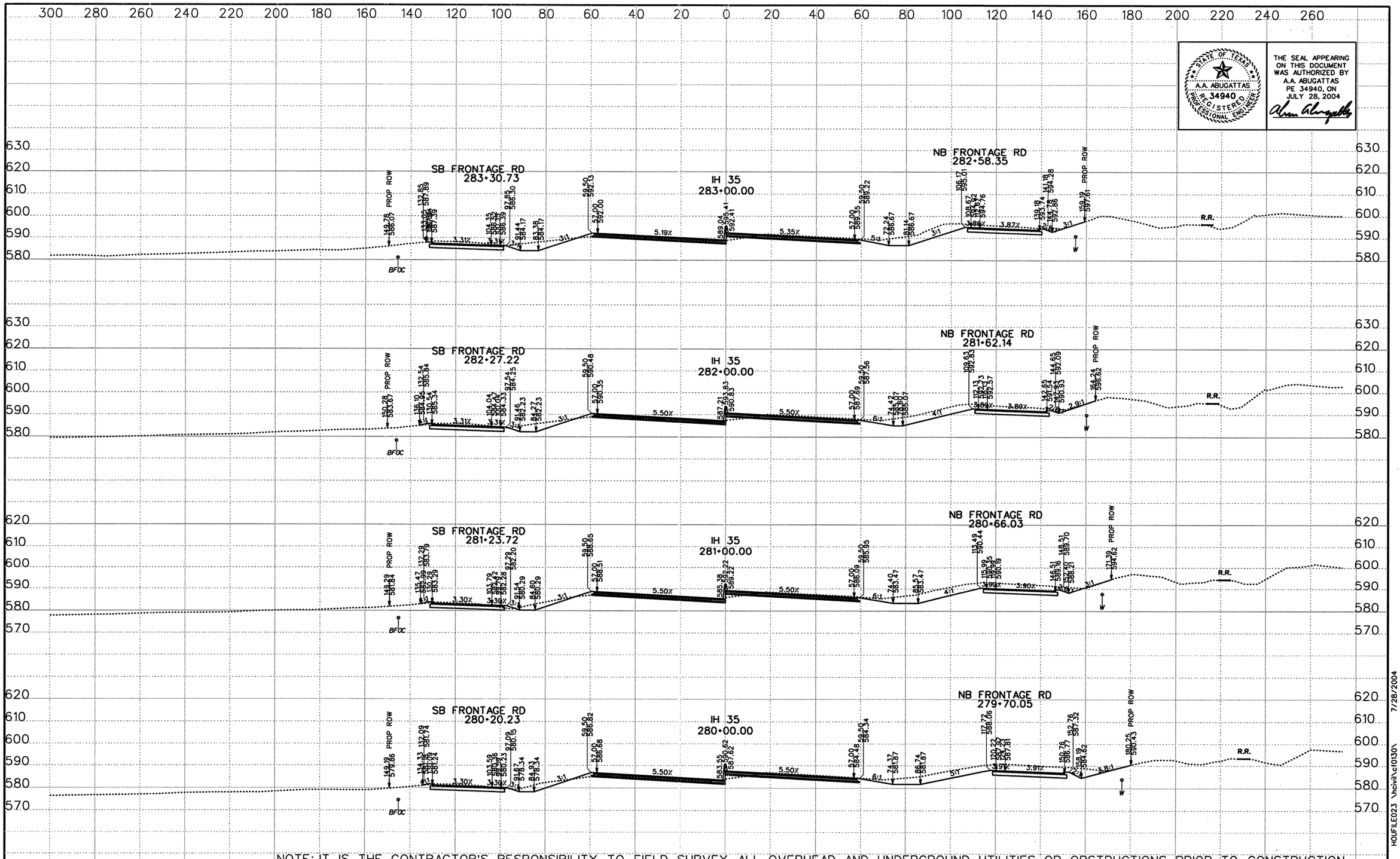

NOTE: IT IS THE CONTRACTOR'S RESPONSIBILITY TO FIELD SURVEY ALL OVERHEAD AND UNDERGROUND UTILITIES OR OBSTRUCTIONS PRIOR TO CONSTRUCTION

STATE OF TEXAS
A.A. ABUGATTAS
34940
REGISTERED PROFESSIONAL ENGINEER

THE SEAL APPEARING ON THIS DOCUMENT WAS AUTHORIZED BY A.A. ABUGATTAS PE 34940, ON JULY 28, 2004

DATE	BY	REV

©2003 Texas Department of Transportation

KBR
Engineered by KBR Technical Services, Inc

SCALE:
1" = 40' HORIZ
1" = 40' VERT
0 ½ 1"

IH 35
LOOP 20 TO UNIROYAL ROAD
PROPOSED CROSS SECTIONS

STATE PROJECT NO			FED RD DIV NO		COUNTY	SHEET 45 OF 104
NH-2002 (79)			6		WEBB	
STATE	DIST NO	CONT	SECT	JOB	HIGHWAY NO	SHEET NO
TEXAS	LAREDO	0018	05	062, ETC	IH 35	926

REF FILE(S): j01xsp01.bdr, bdr LV ON = 5,45,57,60-63

HOUFILE023 \hcivil\c10130\ 7/28/2004

XS ROLL .dgn-

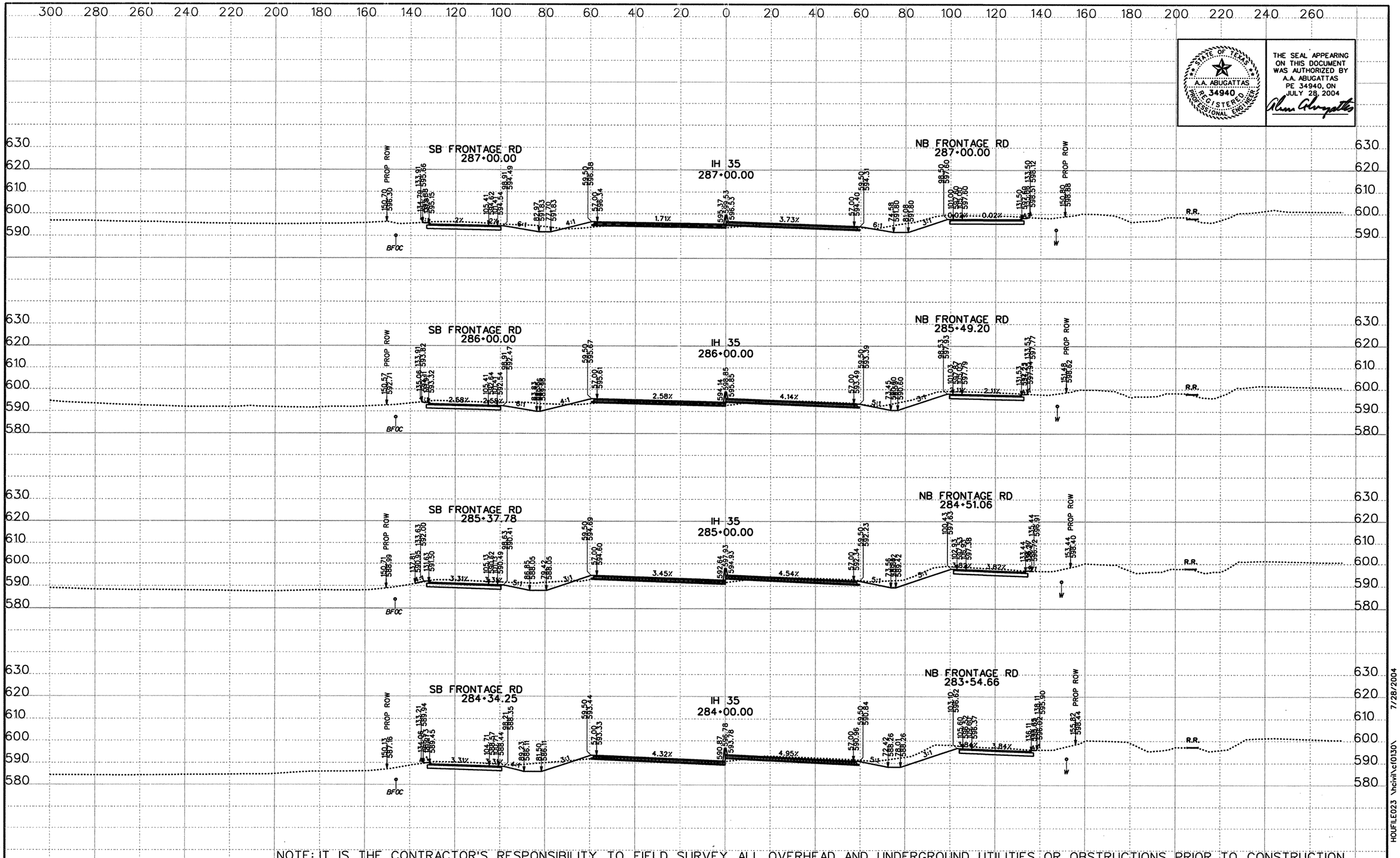

NOTE: IT IS THE CONTRACTOR'S RESPONSIBILITY TO FIELD SURVEY ALL OVERHEAD AND UNDERGROUND UTILITIES OR OBSTRUCTIONS PRIOR TO CONSTRUCTION

DATE	BY	REV

©2003 Texas Department of Transportation

KBR
Engineered by KBR Technical Services, Inc

SCALE:
1" = 40' HORIZ
1" = 40' VERT
0 ½ 1"

IH 35
LOOP 20 TO UNIROYAL ROAD
PROPOSED CROSS SECTIONS

STATE PROJECT NO			FED RD DIV NO		COUNTY	SHEET 46 OF 104
NH-2002 (79)			6		WEBB	
STATE	DIST NO	CONT	SECT	JOB	HIGHWAY NO	SHEET NO
TEXAS	LAREDO	0018	05	062, ETC	IH 35	927

REF FILE(S): j01xsp01.bdr, bdr LV ON = 5,45,57,60-63

HOUFILE023 \hcivil\cf0130\ 7/28/2004

XS ROLL .dgn-

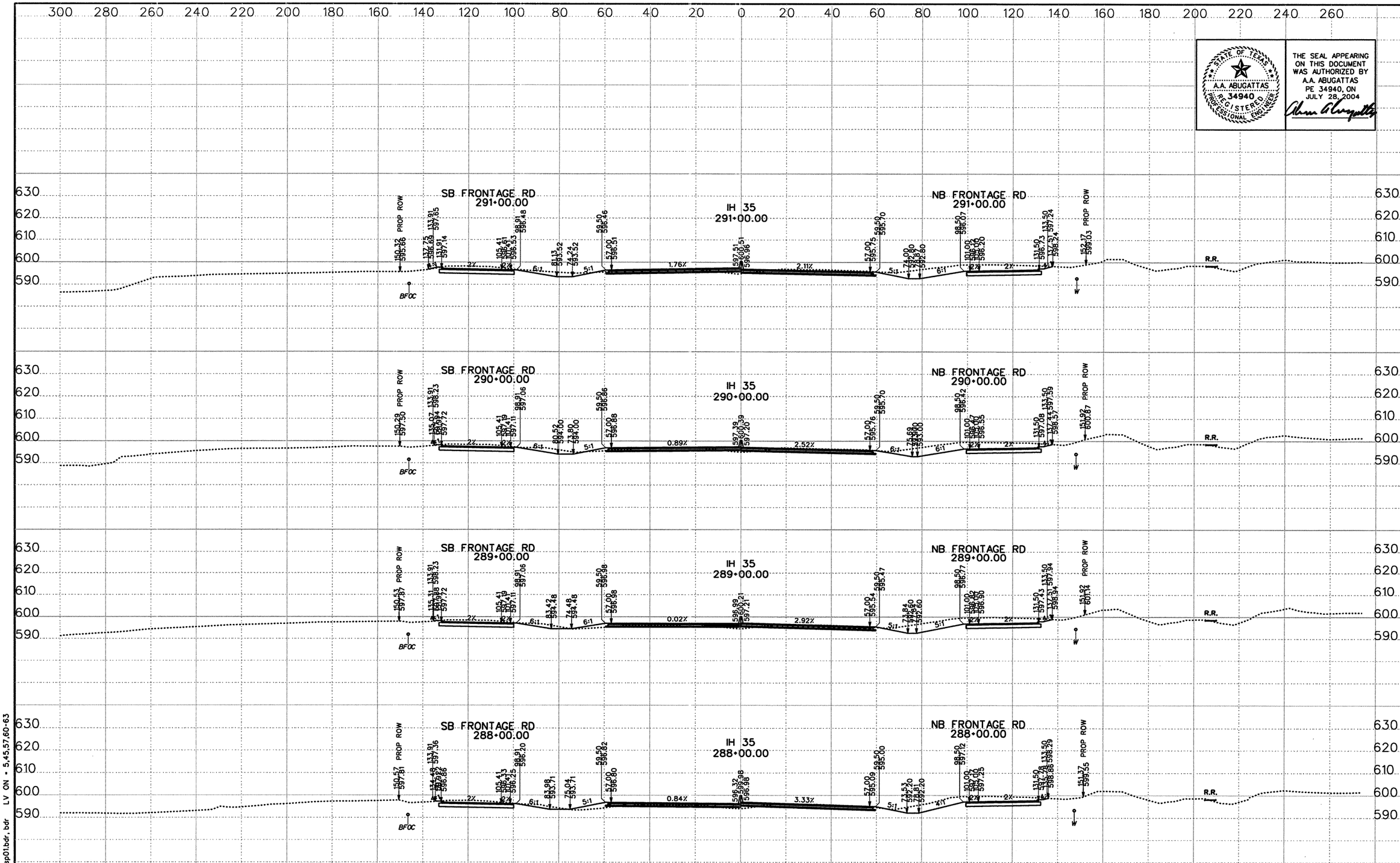

STATE OF TEXAS
A.A. ABUGATTAS
34940
REGISTERED PROFESSIONAL ENGINEER

THE SEAL APPEARING ON THIS DOCUMENT WAS AUTHORIZED BY A.A. ABUGATTAS PE 34940, ON JULY 28, 2004

NOTE: IT IS THE CONTRACTOR'S RESPONSIBILITY TO FIELD SURVEY ALL OVERHEAD AND UNDERGROUND UTILITIES OR OBSTRUCTIONS PRIOR TO CONSTRUCTION

DATE	BY	REV

©2003 Texas Department of Transportation

KBR
Engineered by KBR Technical Services, Inc

SCALE:
1" = 40' HORIZ
1" = 40' VERT
0 1/2 1"

IH 35
LOOP 20 TO UNIROYAL ROAD
PROPOSED CROSS SECTIONS

STATE PROJECT NO			FED RD DIV NO		COUNTY	SHEET 47 OF 104
NH-2002 (79)			6		WEBB	
STATE	DIST NO	CONT	SECT	JOB	HIGHWAY NO	SHEET NO
TEXAS	LAREDO	0018	05	062, ETC	IH 35	928

REF FILE(S): j01xsp01.bdr, bdr LV ON = 5,45,57,60-63

HOUFILE023 \hcivil\cf0130\ 7/28/2004

XS ROLL .dgn

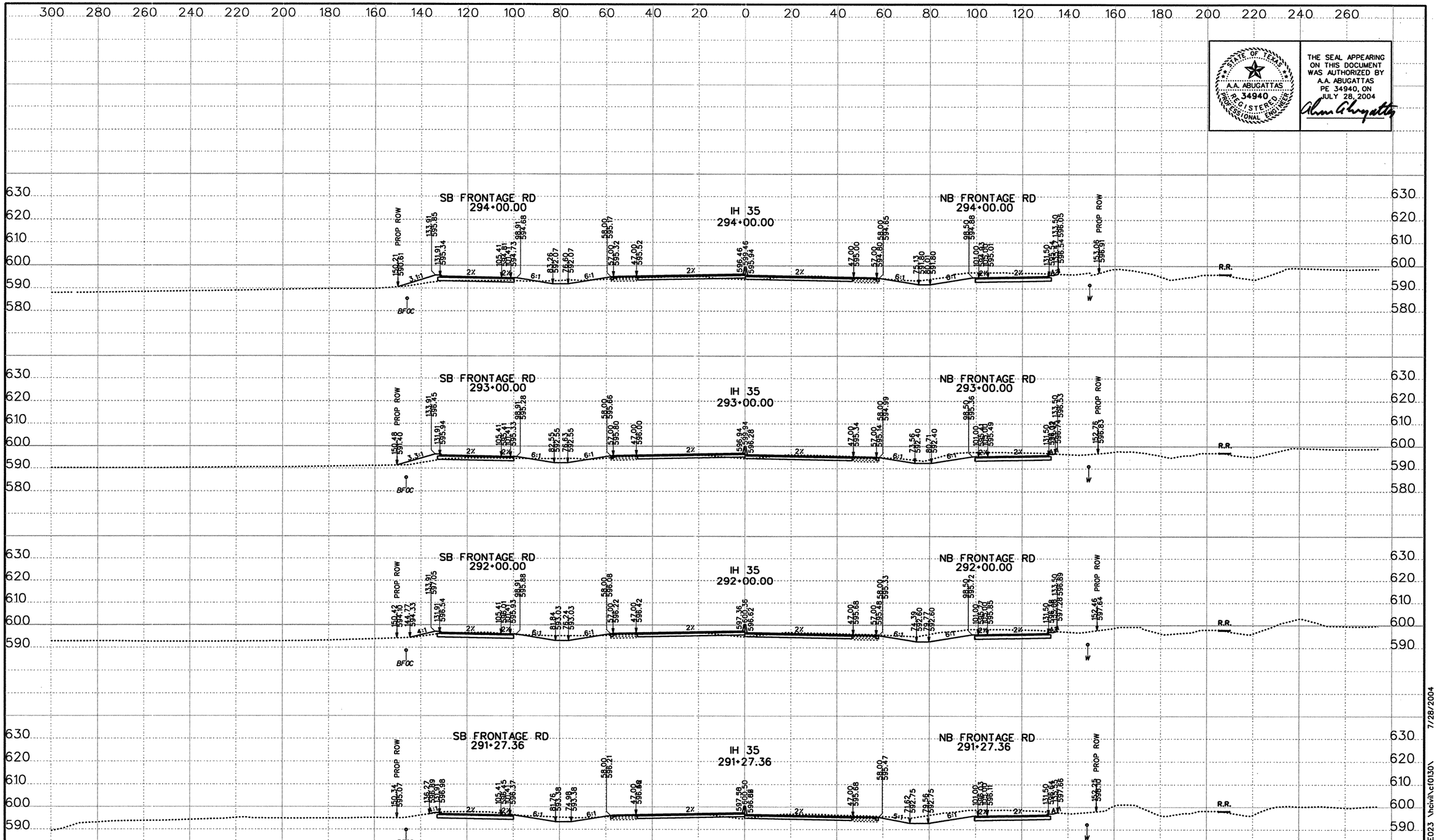

STATE OF TEXAS
A.A. ABUGATTAS
PE 34940
REGISTERED PROFESSIONAL ENGINEER

THE SEAL APPEARING ON THIS DOCUMENT WAS AUTHORIZED BY A.A. ABUGATTAS PE 34940, ON JULY 28, 2004

NOTE: IT IS THE CONTRACTOR'S RESPONSIBILITY TO FIELD SURVEY ALL OVERHEAD AND UNDERGROUND UTILITIES OR OBSTRUCTIONS PRIOR TO CONSTRUCTION

DATE	BY	REV

©2003 Texas Department of Transportation

KBR
Engineered by KBR Technical Services, Inc

SCALE:
1" = 40' HORIZ
1" = 40' VERT
0 ½ 1"

IH 35
LOOP 20 TO UNIROYAL ROAD
PROPOSED CROSS SECTIONS

STATE PROJECT NO			FED RD DIV NO		COUNTY	SHEET 48 OF 104
NH-2002 (79)			6		WEBB	
STATE	DIST NO	CONT	SECT	JOB	HIGHWAY NO	SHEET NO
TEXAS	LAREDO	0018	05	062, ETC	IH 35	929

REF FILE(S): j01xsp01.bdr, bdr LV ON = 5,45,57,60-63

XS ROLL .dgn- HOUFILE023 \hcivil\cf0130\ 7/28/2004

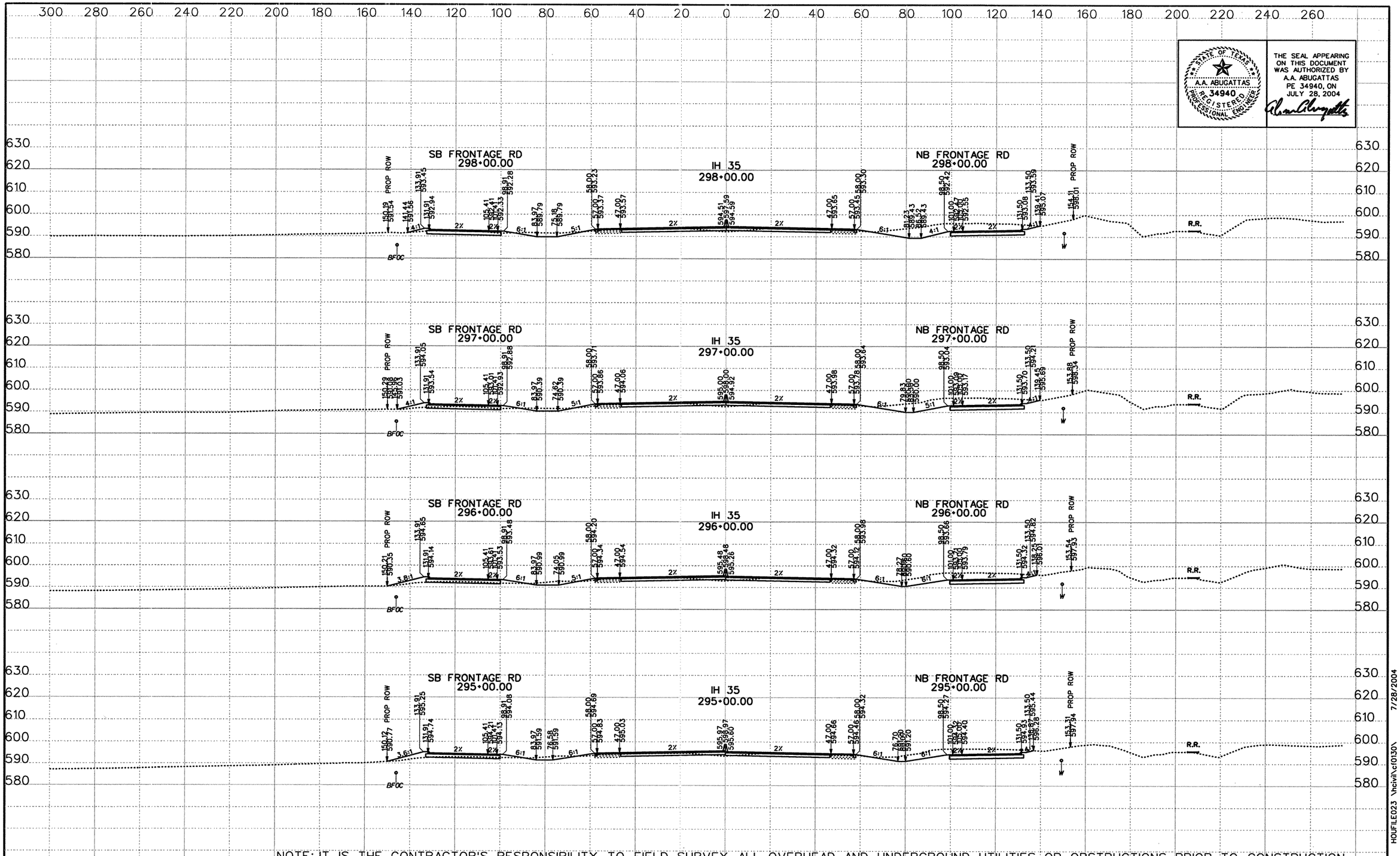

STATE OF TEXAS
A.A. ABUGATTAS
34940
REGISTERED PROFESSIONAL ENGINEER

THE SEAL APPEARING ON THIS DOCUMENT WAS AUTHORIZED BY A.A. ABUGATTAS PE 34940, ON JULY 28, 2004

NOTE: IT IS THE CONTRACTOR'S RESPONSIBILITY TO FIELD SURVEY ALL OVERHEAD AND UNDERGROUND UTILITIES OR OBSTRUCTIONS PRIOR TO CONSTRUCTION

DATE	BY	REV

©2003 Texas Department of Transportation

KBR
Engineered by KBR Technical Services, Inc

SCALE:
1" = 40' HORIZ
1" = 40' VERT.
0 1/2 1"

IH 35
LOOP 20 TO UNIROYAL ROAD
PROPOSED CROSS SECTIONS

STATE PROJECT NO			FED RD DIV NO		COUNTY	SHEET 49 OF 104
NH-2002 (79)			6		WEBB	
STATE	DIST NO	CONT	SECT	JOB	HIGHWAY NO	SHEET NO
TEXAS	LAREDO	0018	05	062, ETC	IH 35	930

REF FILE(S): j01xsp01.bdr, bdr LV ON = 5,45,57,60-63

HOUFILE023 \hcivil\cf0130\ 7/28/2004

XS ROLL .dgn

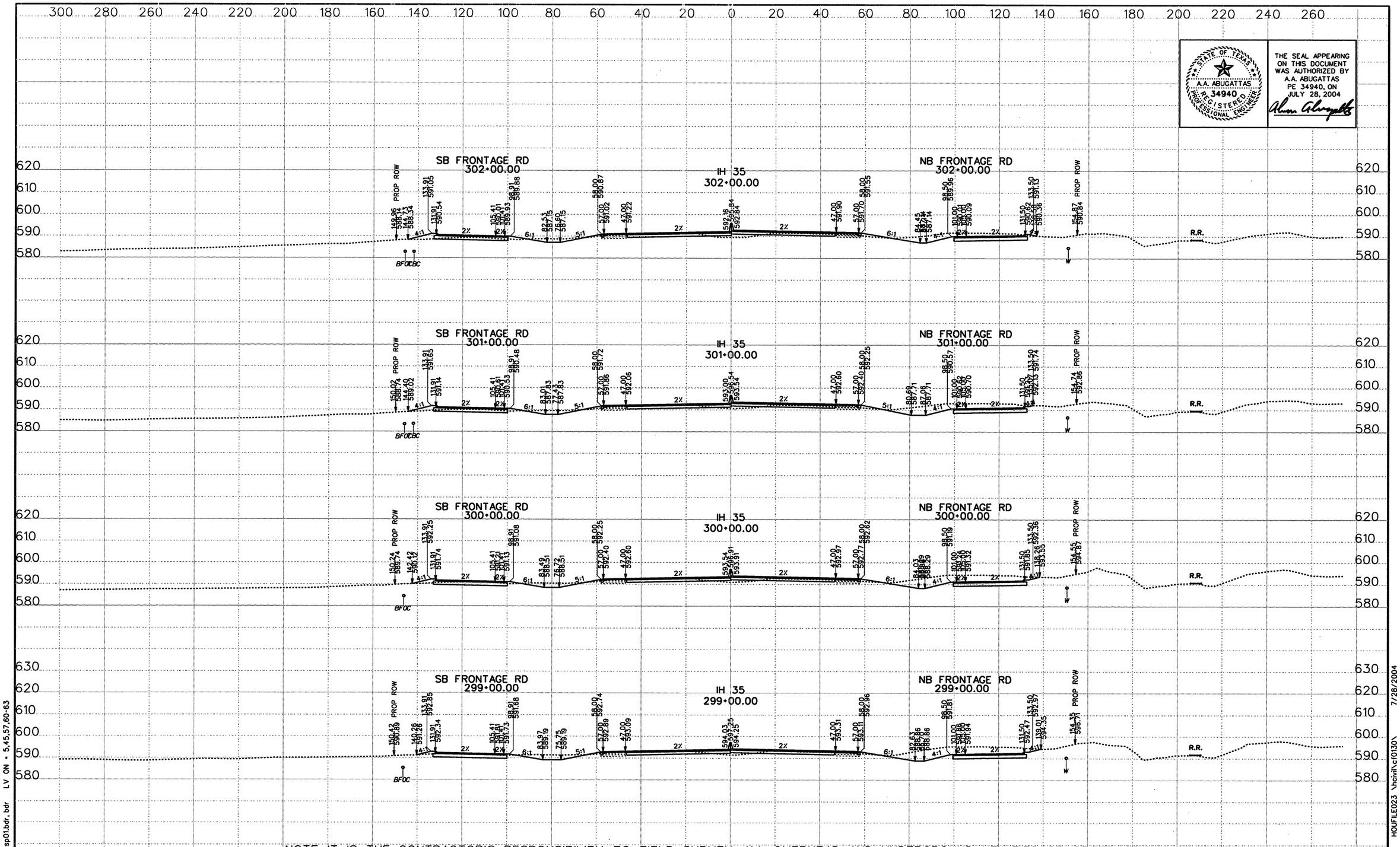

STATE OF TEXAS
A.A. ABUGATTAS
34940
REGISTERED PROFESSIONAL ENGINEER

THE SEAL APPEARING ON THIS DOCUMENT WAS AUTHORIZED BY A.A. ABUGATTAS PE 34940, ON JULY 28, 2004

NOTE: IT IS THE CONTRACTOR'S RESPONSIBILITY TO FIELD SURVEY ALL OVERHEAD AND UNDERGROUND UTILITIES OR OBSTRUCTIONS PRIOR TO CONSTRUCTION

DATE	BY	REV

©2003 Texas Department of Transportation

KBR
Engineered by KBR Technical Services, Inc

SCALE:
1" = 40' HORIZ
1" = 40' VERT
0 1/2 1"

IH 35
LOOP 20 TO UNIROYAL ROAD
PROPOSED CROSS SECTIONS

STATE PROJECT NO			FED RD DIV NO		COUNTY	SHEET 50 OF 104
NH-2002 (79)			6		WEBB	
STATE	DIST NO	CONT	SECT	JOB	HIGHWAY NO	SHEET NO
TEXAS	LAREDO	0018	05	062, ETC	IH 35	931

REF FILE(S): j01xsp01.bdr, bdr LV ON = 5,45,57,60-63

HOUFILE023 \hcivil\cf0130\ 7/28/2004

XS ROLL .dgn

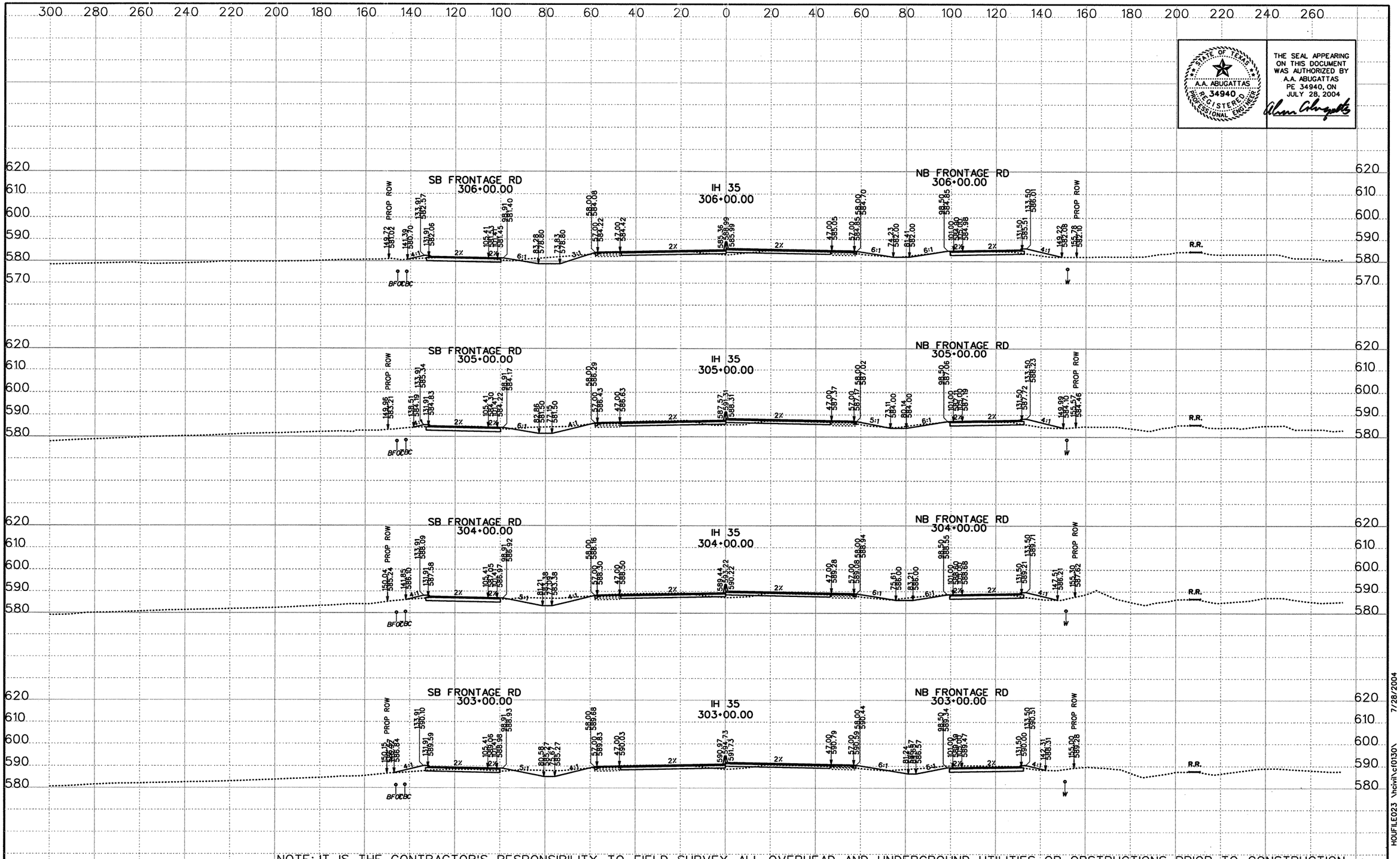

STATE OF TEXAS
A.A. ABUGATTAS
34940
REGISTERED PROFESSIONAL ENGINEER

THE SEAL APPEARING ON THIS DOCUMENT WAS AUTHORIZED BY A.A. ABUGATTAS PE 34940, ON JULY 28, 2004

NOTE: IT IS THE CONTRACTOR'S RESPONSIBILITY TO FIELD SURVEY ALL OVERHEAD AND UNDERGROUND UTILITIES OR OBSTRUCTIONS PRIOR TO CONSTRUCTION

DATE	BY	REV

©2003 Texas Department of Transportation

KBR
Engineered by KBR Technical Services, Inc

SCALE:
1" = 40' HORIZ
1" = 40' VERT
0 1/2 1"

IH 35
LOOP 20 TO UNIROYAL ROAD
PROPOSED CROSS SECTIONS

STATE PROJECT NO			FED RD DIV NO		COUNTY	SHEET 51 OF 104
NH-2002 (79)			6		WEBB	
STATE	DIST NO	CONT	SECT	JOB	HIGHWAY NO	SHEET NO
TEXAS	LAREDO	0018	05	062, ETC	IH 35	932

REF FILE(S): j01xsp01.bdr, bdr LV ON = 5,45,57,60-63

XS ROLL .dgn- HOUFILE023 \hcivil\c10130\ 7/28/2004

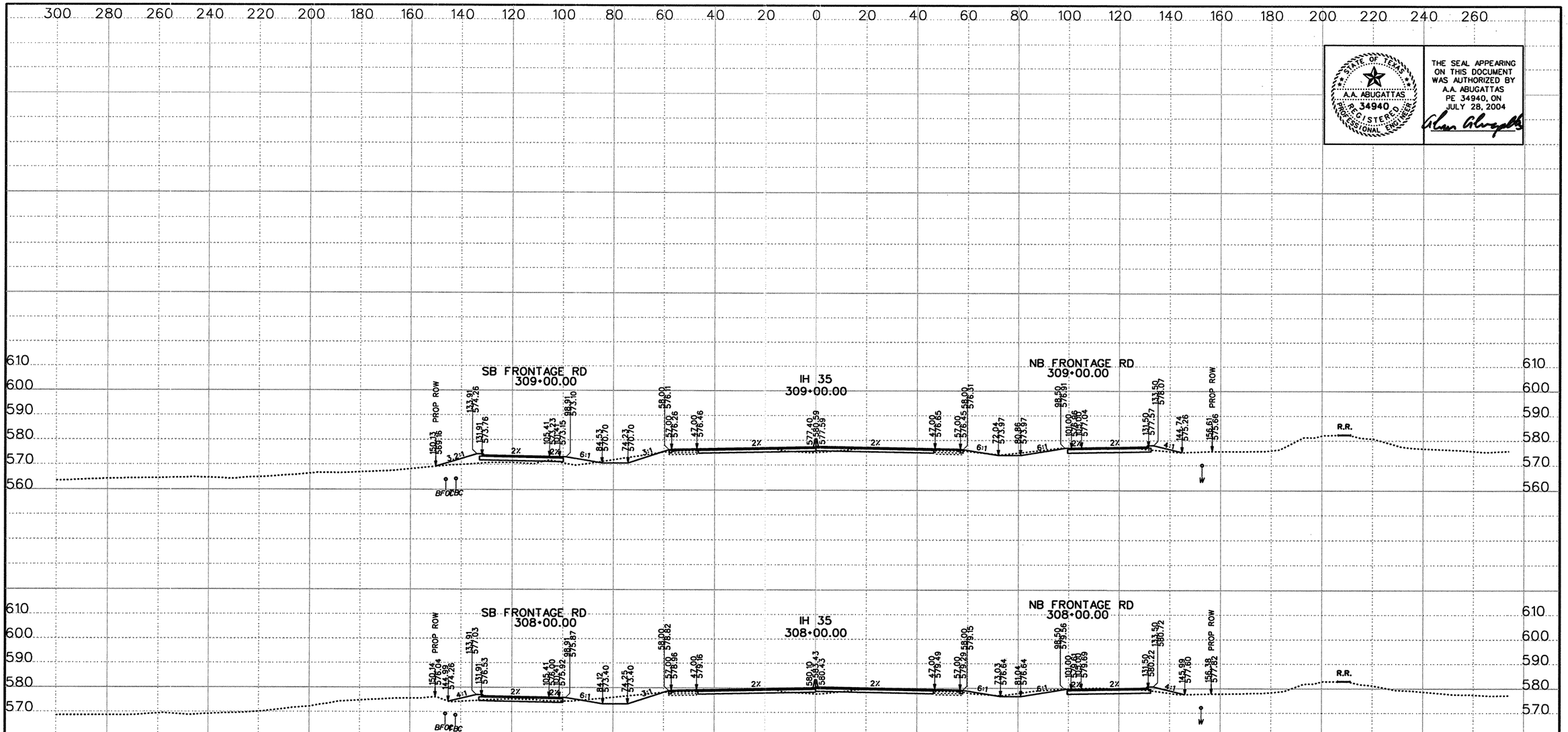

NOTE: IT IS THE CONTRACTOR'S RESPONSIBILITY TO FIELD SURVEY ALL OVERHEAD AND UNDERGROUND UTILITIES OR OBSTRUCTIONS PRIOR TO CONSTRUCTION

STATE OF TEXAS
A.A. ABUGATTAS
PE 34940
REGISTERED PROFESSIONAL ENGINEER

THE SEAL APPEARING ON THIS DOCUMENT WAS AUTHORIZED BY A.A. ABUGATTAS PE 34940, ON JULY 28, 2004

DATE	BY	REV

©2003 Texas Department of Transportation

KBR
Engineered by KBR Technical Services, Inc

SCALE:
1" = 40' HORIZ
1" = 40' VERT
0 ½ 1"

IH 35
LOOP 20 TO UNIROYAL ROAD
PROPOSED CROSS SECTIONS

STATE PROJECT NO			FED RD DIV NO		COUNTY	SHEET 52 OF 104
NH-2002 (79)			6		WEBB	
STATE	DIST NO	CONT	SECT	JOB	HIGHWAY NO	SHEET NO
TEXAS	LAREDO	0018	05	062, ETC	IH 35	933

REF FILE(S): j01xsp01.bdr, bdr LV ON = 5,45,57,60-63

XS ROLL .dgn- HOUFILE023 \hcivil\cf0130\ 7/28/2004

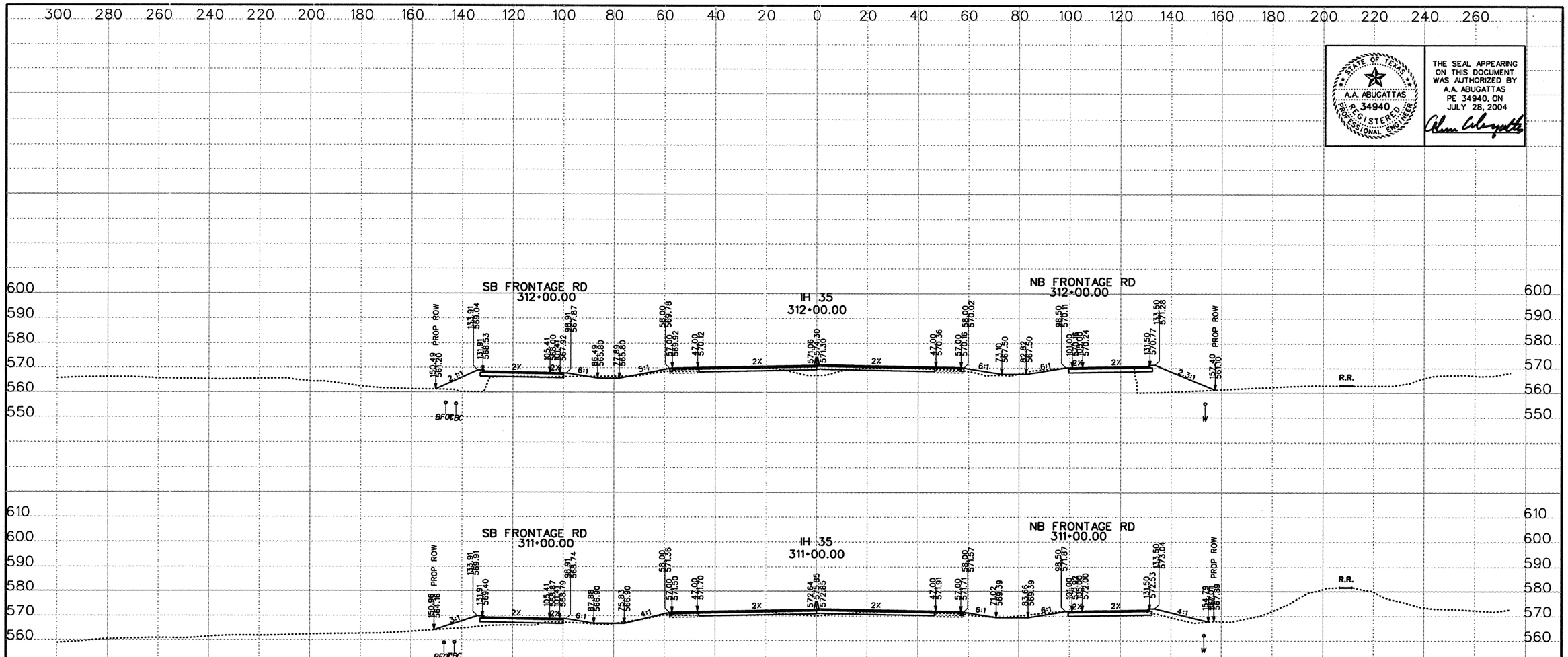

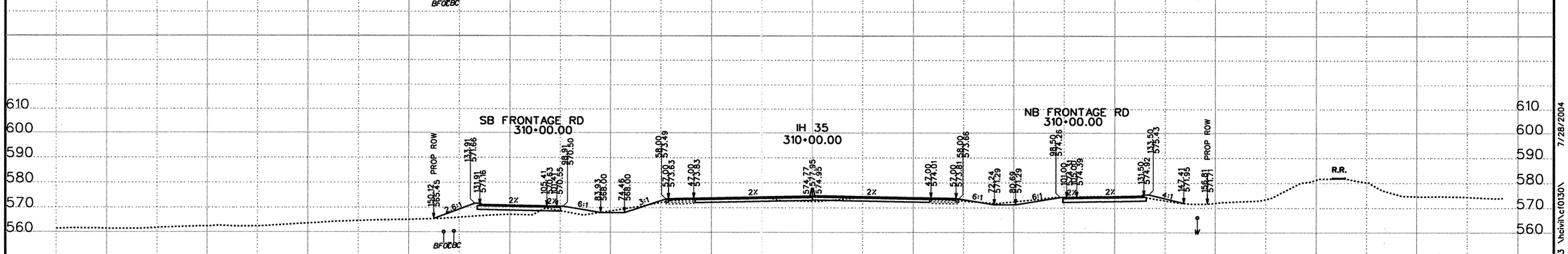

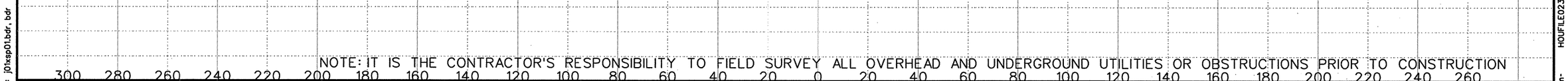

STATE OF TEXAS
A.A. ABUGATTAS
PE 34940
REGISTERED PROFESSIONAL ENGINEER

THE SEAL APPEARING ON THIS DOCUMENT WAS AUTHORIZED BY A.A. ABUGATTAS PE 34940, ON JULY 28, 2004

NOTE: IT IS THE CONTRACTOR'S RESPONSIBILITY TO FIELD SURVEY ALL OVERHEAD AND UNDERGROUND UTILITIES OR OBSTRUCTIONS PRIOR TO CONSTRUCTION

DATE	BY	REV

©2003 Texas Department of Transportation

KBR
Engineered by KBR Technical Services, Inc

SCALE:
1" = 40' HORIZ
1" = 40' VERT
0 1/2 1"

IH 35
LOOP 20 TO UNIROYAL ROAD
PROPOSED CROSS SECTIONS

STATE PROJECT NO			FED RD DIV NO		COUNTY	SHEET 53 OF 104
NH-2002 (79)			6		WEBB	
STATE	DIST NO	CONT	SECT	JOB	HIGHWAY NO	SHEET NO
TEXAS	LAREDO	0018	05	062, ETC	IH 35	934

REF FILE(S): j0txsp01.bdr, bdr LV ON = 5,45,57,60-63

HOUFILE023 \hcivil\cf0130\ 7/28/2004

XS ROLL .dgn-

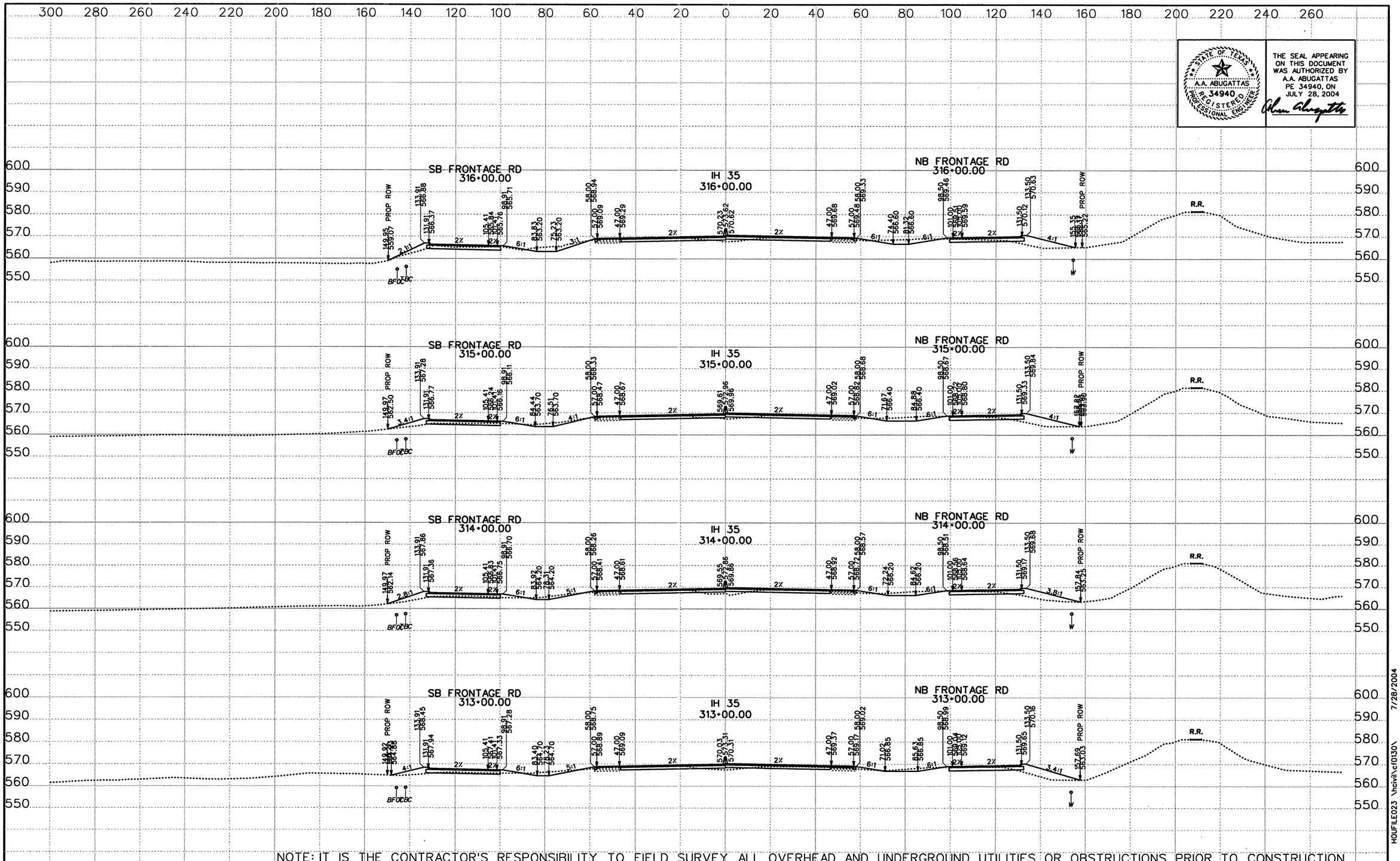

STATE OF TEXAS
A.A. ABUGATTAS
34940
REGISTERED PROFESSIONAL ENGINEER

THE SEAL APPEARING ON THIS DOCUMENT WAS AUTHORIZED BY A.A. ABUGATTAS PE 34940, ON JULY 28, 2004

NOTE: IT IS THE CONTRACTOR'S RESPONSIBILITY TO FIELD SURVEY ALL OVERHEAD AND UNDERGROUND UTILITIES OR OBSTRUCTIONS PRIOR TO CONSTRUCTION

DATE	BY	REV

©2003 Texas Department of Transportation

KBR
Engineered by KBR Technical Services, Inc

SCALE:
1" = 40' HORIZ
1" = 40' VERT
0 1/2 1"

IH 35
LOOP 20 TO UNIROYAL ROAD
PROPOSED CROSS SECTIONS

STATE PROJECT NO			FED RD DIV NO		COUNTY	SHEET 54 OF 104
NH-2002 (79)			6		WEBB	
STATE	DIST NO	CONT	SECT	JOB	HIGHWAY NO	SHEET NO
TEXAS	LAREDO	0018	05	062, ETC	IH 35	935

REF FILE(S): j01xsp01.bdr, bdr LV ON = 5,45,57,60-63

XS ROLL .dgn- HOUFILE023 \hcivil\c10130\ 7/28/2004

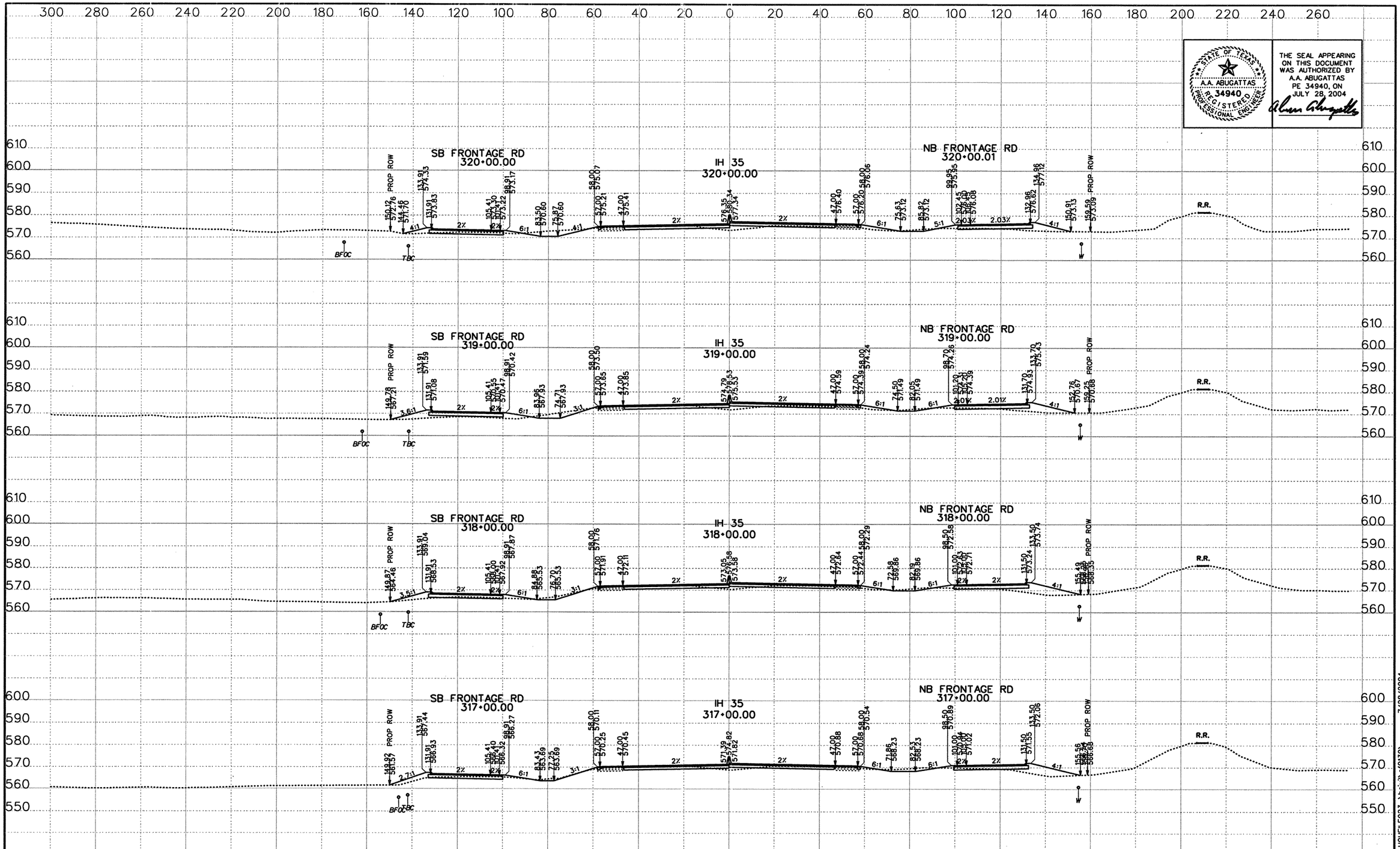

STATE OF TEXAS
A.A. ABUGATTAS
34940
REGISTERED PROFESSIONAL ENGINEER

THE SEAL APPEARING ON THIS DOCUMENT WAS AUTHORIZED BY A.A. ABUGATTAS PE 34940, ON JULY 28, 2004

NOTE: IT IS THE CONTRACTOR'S RESPONSIBILITY TO FIELD SURVEY ALL OVERHEAD AND UNDERGROUND UTILITIES OR OBSTRUCTIONS PRIOR TO CONSTRUCTION

DATE	BY	REV

©2003 Texas Department of Transportation

KBR
Engineered by KBR Technical Services, Inc

SCALE:
1" = 40' HORIZ
1" = 40' VERT
0 1/2 1"

IH 35
LOOP 20 TO UNIROYAL ROAD
PROPOSED CROSS SECTIONS

STATE PROJECT NO			FED RD DIV NO		COUNTY	SHEET 55 OF 104
NH-2002 (79)			6		WEBB	
STATE	DIST NO	CONT	SECT	JOB	HIGHWAY NO	SHEET NO
TEXAS	LAREDO	0018	05	062, ETC	IH 35	936

REF FILE(S): j01xsp01.bdr, bdr LV ON = 5,45,57,60-63

HOUFILE023 \hcivil\cf0130\ 7/28/2004

XS ROLL .dgn-

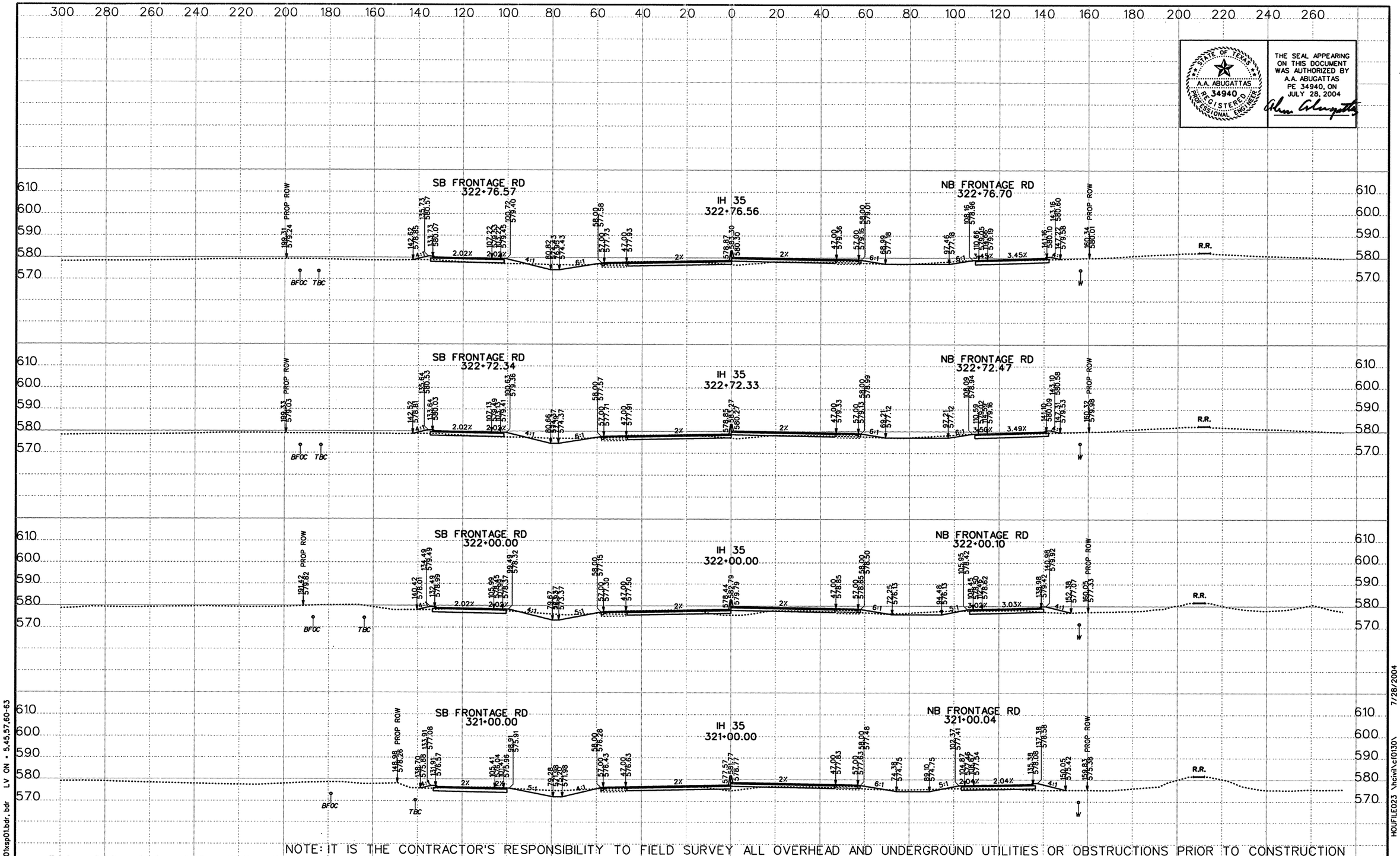

STATE OF TEXAS
A.A. ABUGATTAS
34940
REGISTERED PROFESSIONAL ENGINEER

THE SEAL APPEARING ON THIS DOCUMENT WAS AUTHORIZED BY A.A. ABUGATTAS PE 34940, ON JULY 28, 2004

NOTE: IT IS THE CONTRACTOR'S RESPONSIBILITY TO FIELD SURVEY ALL OVERHEAD AND UNDERGROUND UTILITIES OR OBSTRUCTIONS PRIOR TO CONSTRUCTION

DATE	BY	REV

©2003 Texas Department of Transportation

KBR
Engineered by KBR Technical Services, Inc

SCALE:
1" = 40' HORIZ
1" = 40' VERT
0 1/2 1"

IH 35
LOOP 20 TO UNIROYAL ROAD
PROPOSED CROSS SECTIONS

STATE PROJECT NO			FED RD DIV NO		COUNTY	SHEET 56 OF 104
NH-2002 (79)			6		WEBB	
STATE	DIST NO	CONT	SECT	JOB	HIGHWAY NO	SHEET NO
TEXAS	LAREDO	0018	05	062, ETC	IH 35	937

REF FILE(S): j01xsp01.bdr, bdr LV ON = 5,45,57,60-63

HOUFILE023 \hcivil\c10130\ 7/28/2004 XS ROLL .dgn-

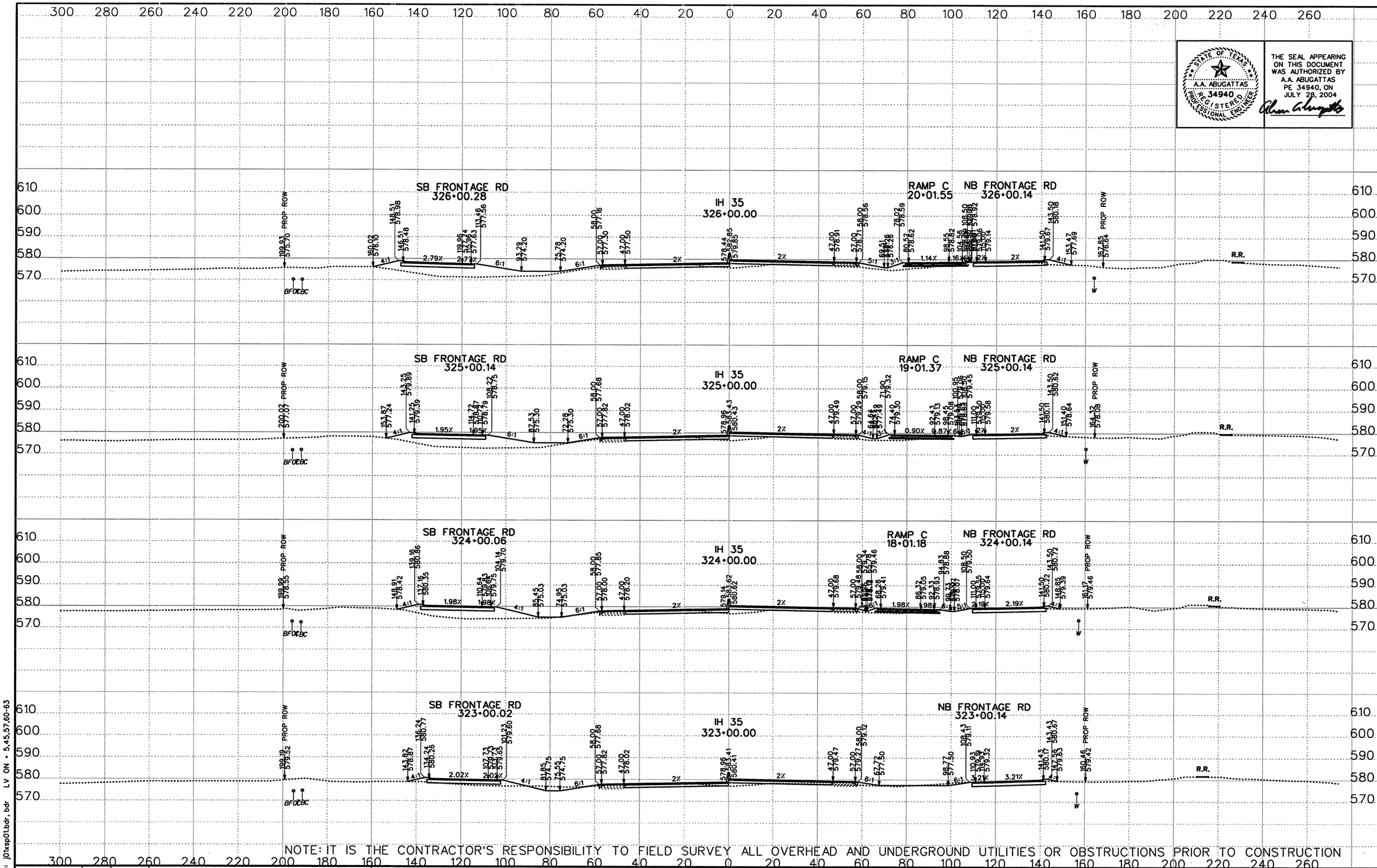

THE SEAL APPEARING ON THIS DOCUMENT WAS AUTHORIZED BY A.A. ABUGATTAS PE 34940, ON JULY 28, 2004

NOTE: IT IS THE CONTRACTOR'S RESPONSIBILITY TO FIELD SURVEY ALL OVERHEAD AND UNDERGROUND UTILITIES OR OBSTRUCTIONS PRIOR TO CONSTRUCTION

DATE	BY	REV

©2003 Texas Department of Transportation

KBR
Engineered by KBR Technical Services, Inc

SCALE:
1" = 40' HORIZ
1" = 40' VERT
0 1/2 1"

IH 35
LOOP 20 TO UNIROYAL ROAD
PROPOSED CROSS SECTIONS

STATE PROJECT NO			FED RD DIV NO		COUNTY	SHEET 57 OF 104
NH-2002 (79)			6		WEBB	
STATE	DIST NO	CONT	SECT	JOB	HIGHWAY NO	SHEET NO
TEXAS	LAREDO	0018	05	062, ETC	IH 35	938

REF FILE(S): j01xsp01.bdr, bdr LV ON = 5,45,57,60-63

HOUFILE023 \hcivil\c10130\ 7/28/2004 XS ROLL .dgn

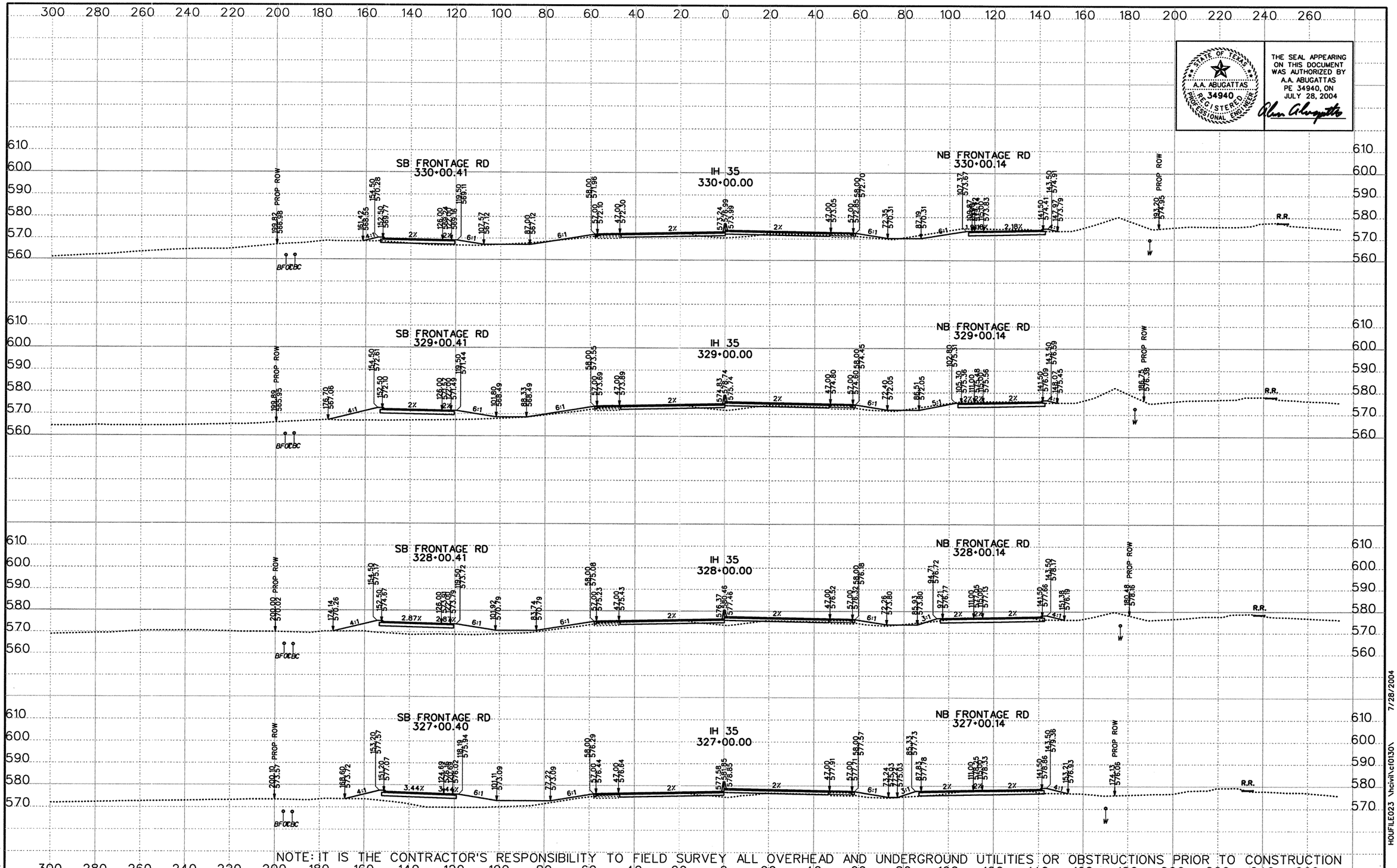

THE SEAL APPEARING ON THIS DOCUMENT WAS AUTHORIZED BY A.A. ABUGATTAS PE 34940, ON JULY 28, 2004

STATE OF TEXAS A.A. ABUGATTAS 34940 REGISTERED PROFESSIONAL ENGINEER

NOTE: IT IS THE CONTRACTOR'S RESPONSIBILITY TO FIELD SURVEY ALL OVERHEAD AND UNDERGROUND UTILITIES OR OBSTRUCTIONS PRIOR TO CONSTRUCTION

DATE	BY	REV

©2003 Texas Department of Transportation

KBR
Engineered by KBR Technical Services, Inc

SCALE: 1" = 40' HORIZ 1" = 40' VERT 0 1/2 1"

IH 35
LOOP 20 TO UNIROYAL ROAD
PROPOSED CROSS SECTIONS

STATE PROJECT NO			FED RD DIV NO		COUNTY	SHEET 58 OF 104
NH-2002 (79)			6		WEBB	
STATE	DIST NO	CONT	SECT	JOB	HIGHWAY NO	SHEET NO
TEXAS	LAREDO	0018	05	062, ETC	IH 35	939

REF FILE(S): j01xsp01.bdr, bdr LV ON = 5,45,57,60-63

XS ROLL .dgn- HOUFILE023 \hcivil\cf0130\ 7/28/2004

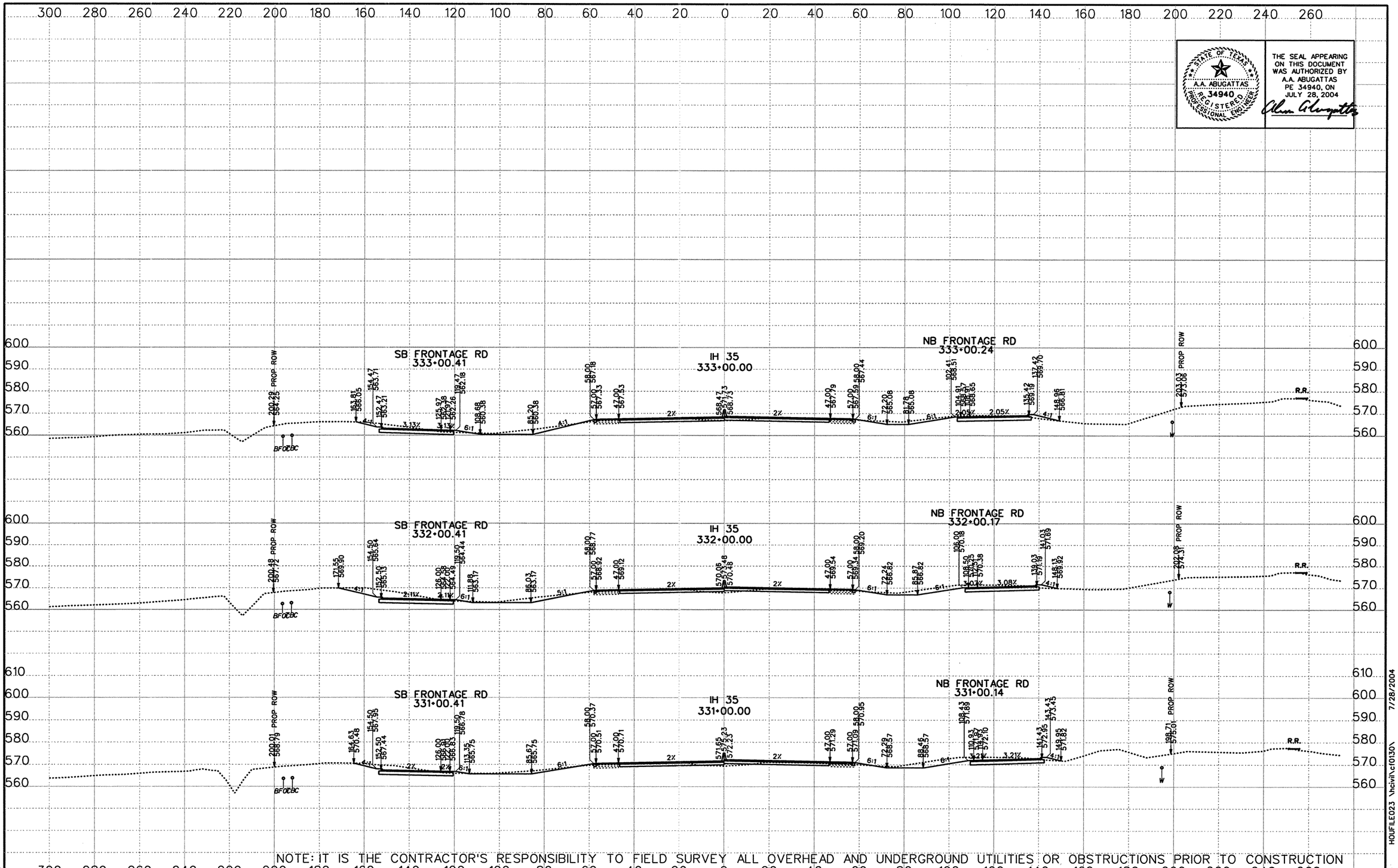

STATE OF TEXAS
A.A. ABUGATTAS
PE 34940
REGISTERED PROFESSIONAL ENGINEER

THE SEAL APPEARING ON THIS DOCUMENT WAS AUTHORIZED BY A.A. ABUGATTAS PE 34940, ON JULY 28, 2004

NOTE: IT IS THE CONTRACTOR'S RESPONSIBILITY TO FIELD SURVEY ALL OVERHEAD AND UNDERGROUND UTILITIES OR OBSTRUCTIONS PRIOR TO CONSTRUCTION

DATE	BY	REV

©2003 Texas Department of Transportation

KBR
Engineered by KBR Technical Services, Inc

SCALE:
1" = 40' HORIZ
1" = 40' VERT
0 1/2 1"

IH 35
LOOP 20 TO UNIROYAL ROAD
PROPOSED CROSS SECTIONS

STATE PROJECT NO			FED RD DIV NO		COUNTY	SHEET 59 OF 104
NH-2002 (79)			6		WEBB	
STATE	DIST NO	CONT	SECT	JOB	HIGHWAY NO	SHEET NO
TEXAS	LAREDO	0018	05	062, ETC	IH 35	940.

REF FILE(S): j01xsp01.bdr, bdr LV ON = 5,45,57,60-63

XS ROLL .dgn- HOUFILE023 \hctivl\cf0130\ 7/28/2004

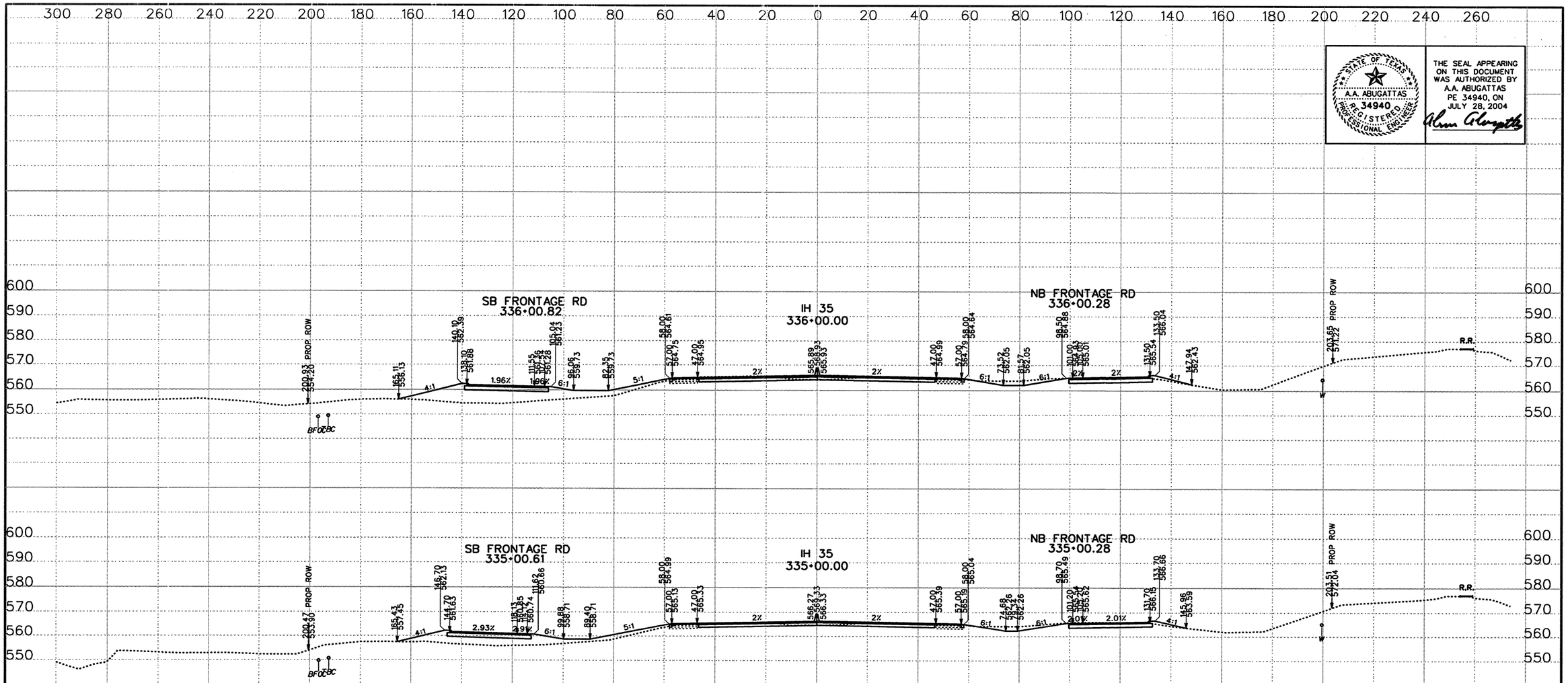

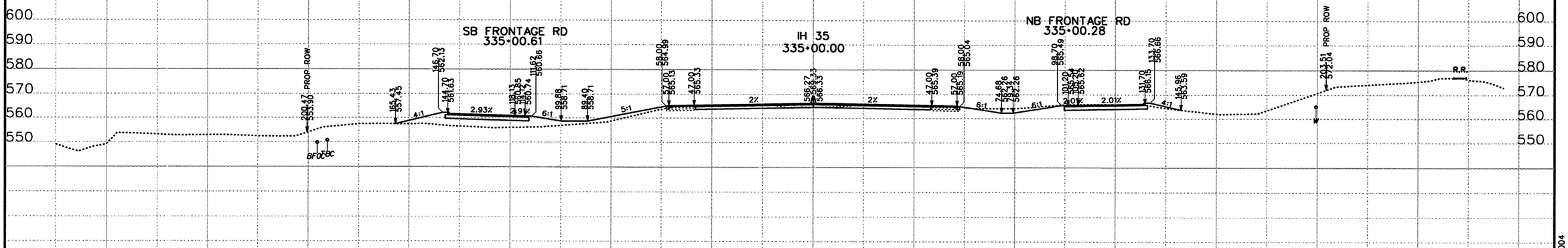

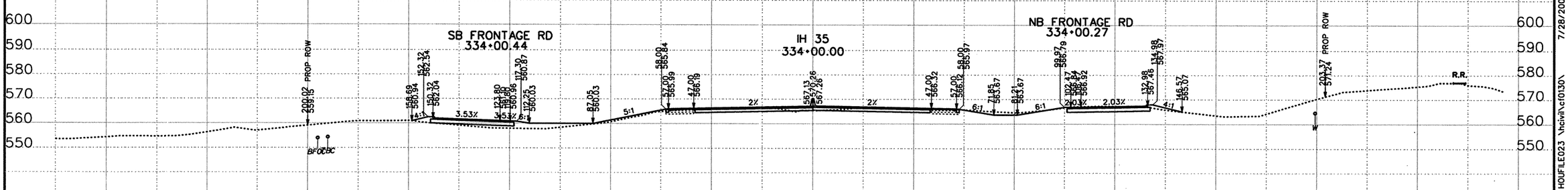

THE SEAL APPEARING ON THIS DOCUMENT WAS AUTHORIZED BY A.A. ABUGATTAS PE 34940, ON JULY 28, 2004

STATE OF TEXAS — A.A. ABUGATTAS — 34940 — REGISTERED PROFESSIONAL ENGINEER

NOTE: IT IS THE CONTRACTOR'S RESPONSIBILITY TO FIELD SURVEY ALL OVERHEAD AND UNDERGROUND UTILITIES OR OBSTRUCTIONS PRIOR TO CONSTRUCTION

DATE	BY	REV

©2003 Texas Department of Transportation

KBR
Engineered by KBR Technical Services, Inc

SCALE:
1" = 40' HORIZ
1" = 40' VERT
0 1/2 1"

IH 35
LOOP 20 TO UNIROYAL ROAD
PROPOSED CROSS SECTIONS

STATE PROJECT NO			FED RD DIV NO		COUNTY	SHEET 60 OF 104
NH-2002 (79)			6		WEBB	
STATE	DIST NO	CONT	SECT	JOB	HIGHWAY NO	SHEET NO
TEXAS	LAREDO	0018	05	062, ETC	IH 35	941

REF FILE(S): j01xsp01.bdr, bdr LV ON = 5,45,57,60-63

XS ROLL .dgn- HOUFILE023 \hcivil\cf0130\ 7/28/2004

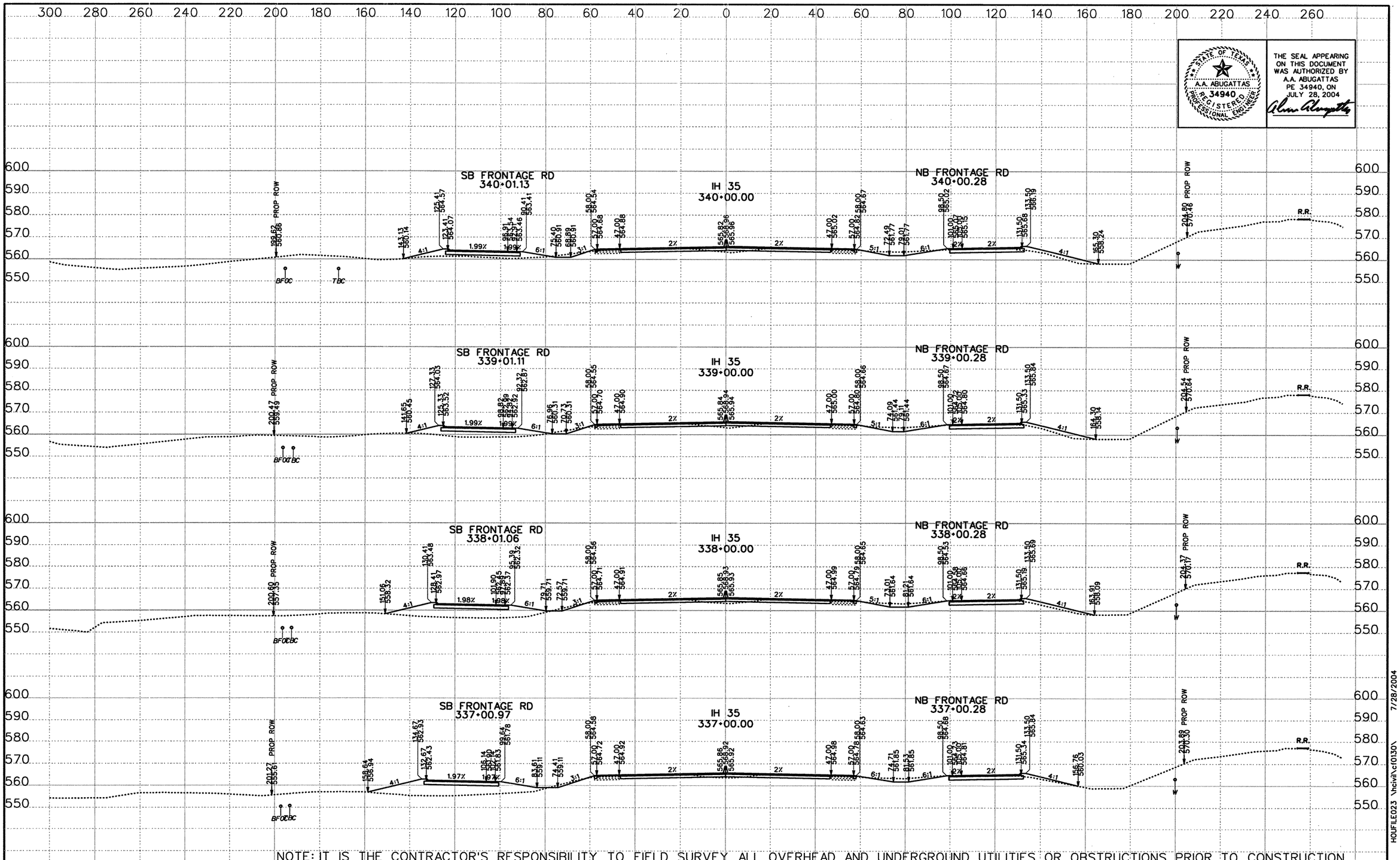

STATE OF TEXAS
A.A. ABUGATTAS
PE 34940
REGISTERED PROFESSIONAL ENGINEER

THE SEAL APPEARING ON THIS DOCUMENT WAS AUTHORIZED BY A.A. ABUGATTAS PE 34940, ON JULY 28, 2004

DATE	BY	REV

©2003 Texas Department of Transportation

KBR
Engineered by KBR Technical Services, Inc

SCALE:
1" = 40' HORIZ
1" = 40' VERT
0 1/2 1"

IH 35
LOOP 20 TO UNIROYAL ROAD
PROPOSED CROSS SECTIONS

STATE PROJECT NO			FED RD DIV NO		COUNTY	SHEET 61 OF 104
NH-2002 (79)			6		WEBB	
STATE	DIST NO	CONT	SECT	JOB	HIGHWAY NO	SHEET NO
TEXAS	LAREDO	0018	05	062, ETC	IH 35	942

REF FILE(S): j01xsp01.bdr, bdr LV ON = 5,45,57,60-63

XS ROLL .dgn- HOUFILE023 \hcivil\c10130\ 7/28/2004

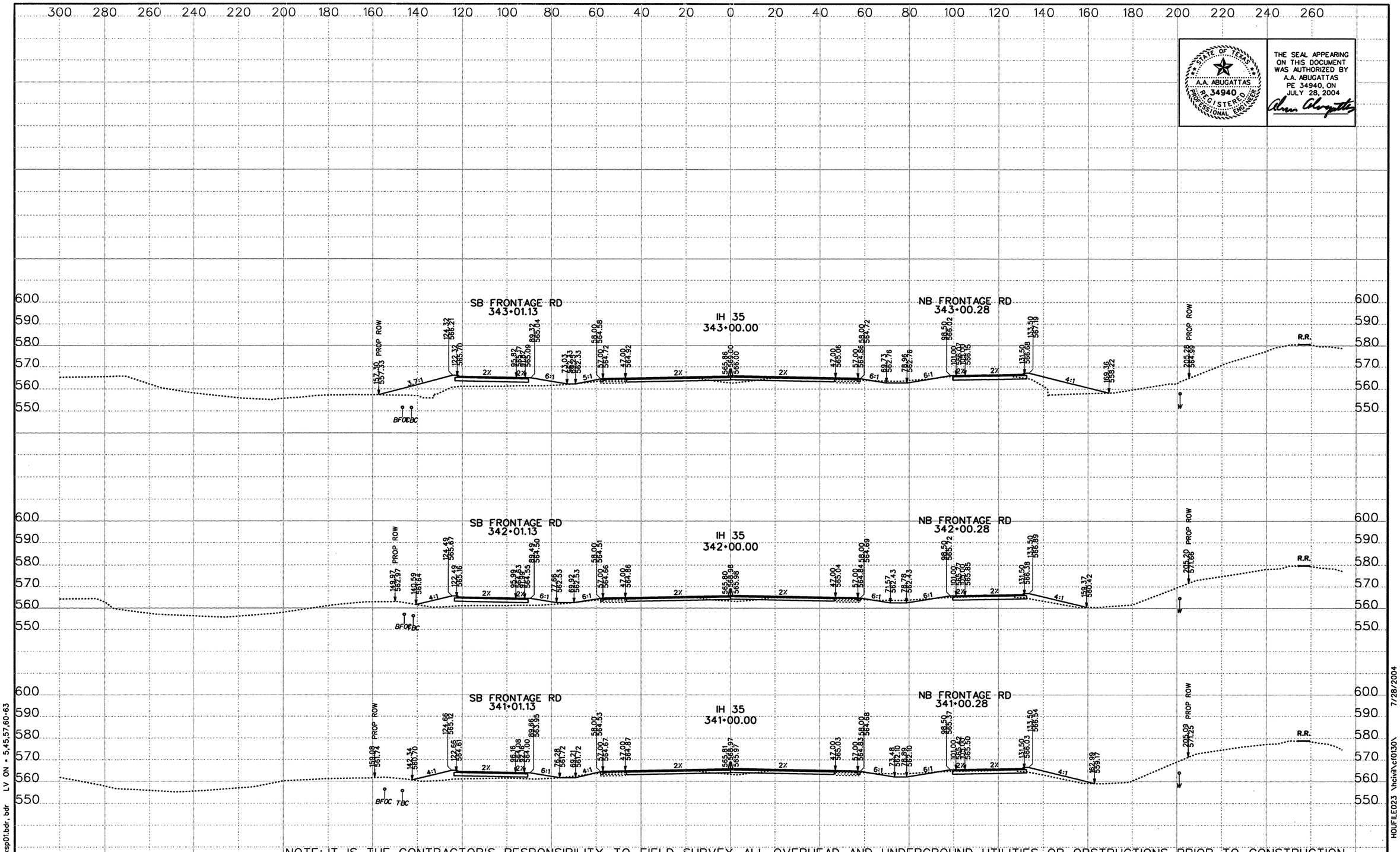

STATE OF TEXAS
A.A. ABUGATTAS
34940
REGISTERED PROFESSIONAL ENGINEER

THE SEAL APPEARING ON THIS DOCUMENT WAS AUTHORIZED BY A.A. ABUGATTAS PE 34940, ON JULY 28, 2004

NOTE: IT IS THE CONTRACTOR'S RESPONSIBILITY TO FIELD SURVEY ALL OVERHEAD AND UNDERGROUND UTILITIES OR OBSTRUCTIONS PRIOR TO CONSTRUCTION

DATE	BY	REV

©2003 Texas Department of Transportation

KBR
Engineered by KBR Technical Services, Inc

SCALE:
1" = 40' HORIZ
1" = 40' VERT
0 ½ 1"

IH 35
LOOP 20 TO UNIROYAL ROAD
PROPOSED CROSS SECTIONS

STATE PROJECT NO			FED RD DIV NO		COUNTY	SHEET 62 OF 104
NH-2002 (79)			6		WEBB	
STATE	DIST NO	CONT	SECT	JOB	HIGHWAY NO	SHEET NO
TEXAS	LAREDO	0018	05	062, ETC	IH 35	943

REF FILE(S): j01xsp01.bdr, bdr LV ON = 5,45,57,60-63

XS ROLL .dgn- HOUFILE023 \hcivil\c f0130\ 7/28/2004

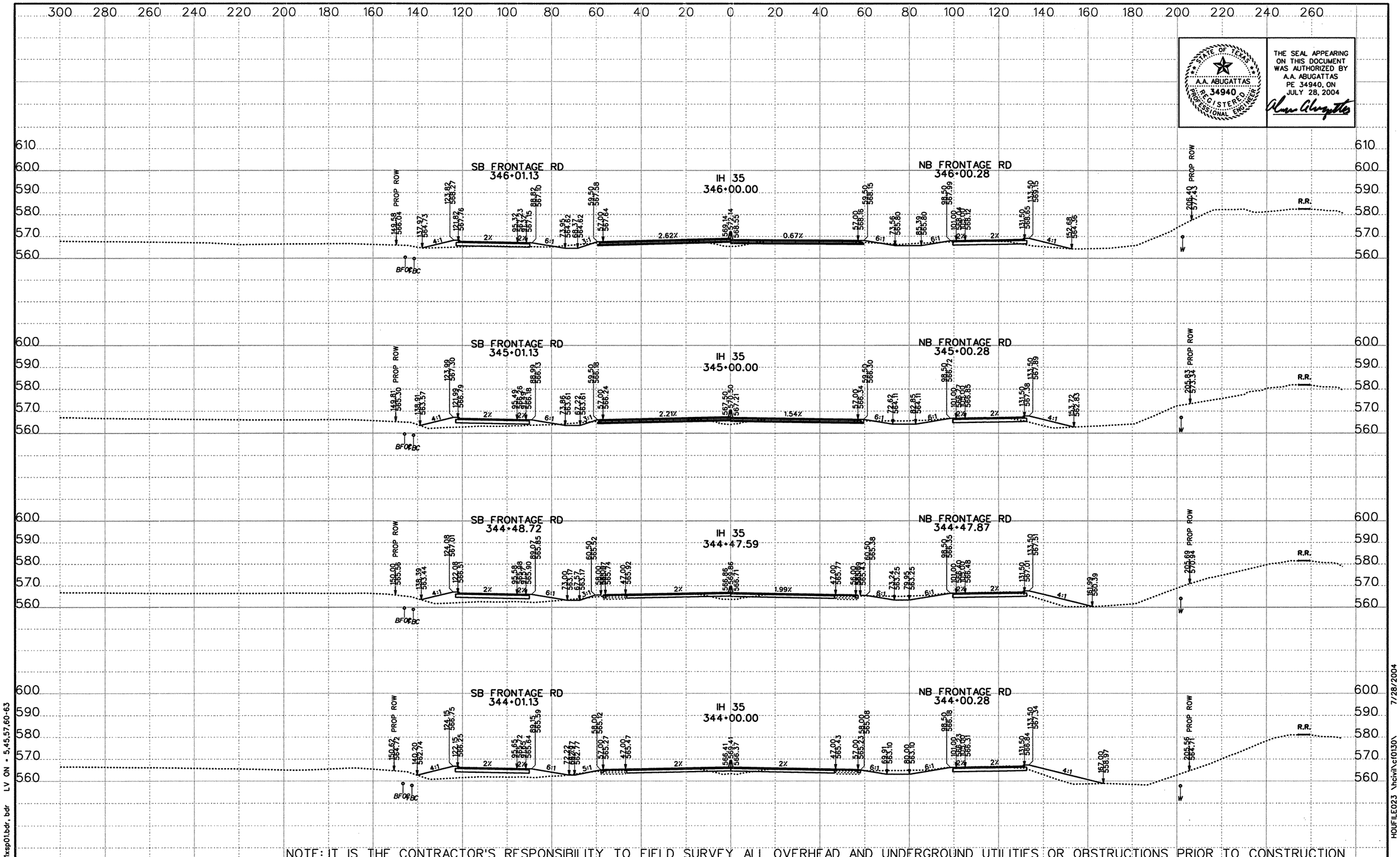

STATE OF TEXAS
A.A. ABUGATTAS
34940
REGISTERED PROFESSIONAL ENGINEER

THE SEAL APPEARING ON THIS DOCUMENT WAS AUTHORIZED BY A.A. ABUGATTAS PE 34940, ON JULY 28, 2004

NOTE: IT IS THE CONTRACTOR'S RESPONSIBILITY TO FIELD SURVEY ALL OVERHEAD AND UNDERGROUND UTILITIES OR OBSTRUCTIONS PRIOR TO CONSTRUCTION

DATE	BY	REV

©2003 Texas Department of Transportation

KBR
Engineered by KBR Technical Services, Inc

SCALE:
1" = 40' HORIZ
1" = 40' VERT
0 1/2 1"

IH 35
LOOP 20 TO UNIROYAL ROAD
PROPOSED CROSS SECTIONS

STATE PROJECT NO			FED RD DIV NO		COUNTY	SHEET 63 OF 104
NH-2002 (79)			6		WEBB	
STATE	DIST NO	CONT	SECT	JOB	HIGHWAY NO	SHEET NO
TEXAS	LAREDO	0018	05	062, ETC	IH 35	944

REF FILE(S): j01xsp01.bdr, bdr LV ON = 5,45,57,60-63

HOUFILE023 \hctvlt\cf0130\ 7/28/2004

XS ROLL .dgn-

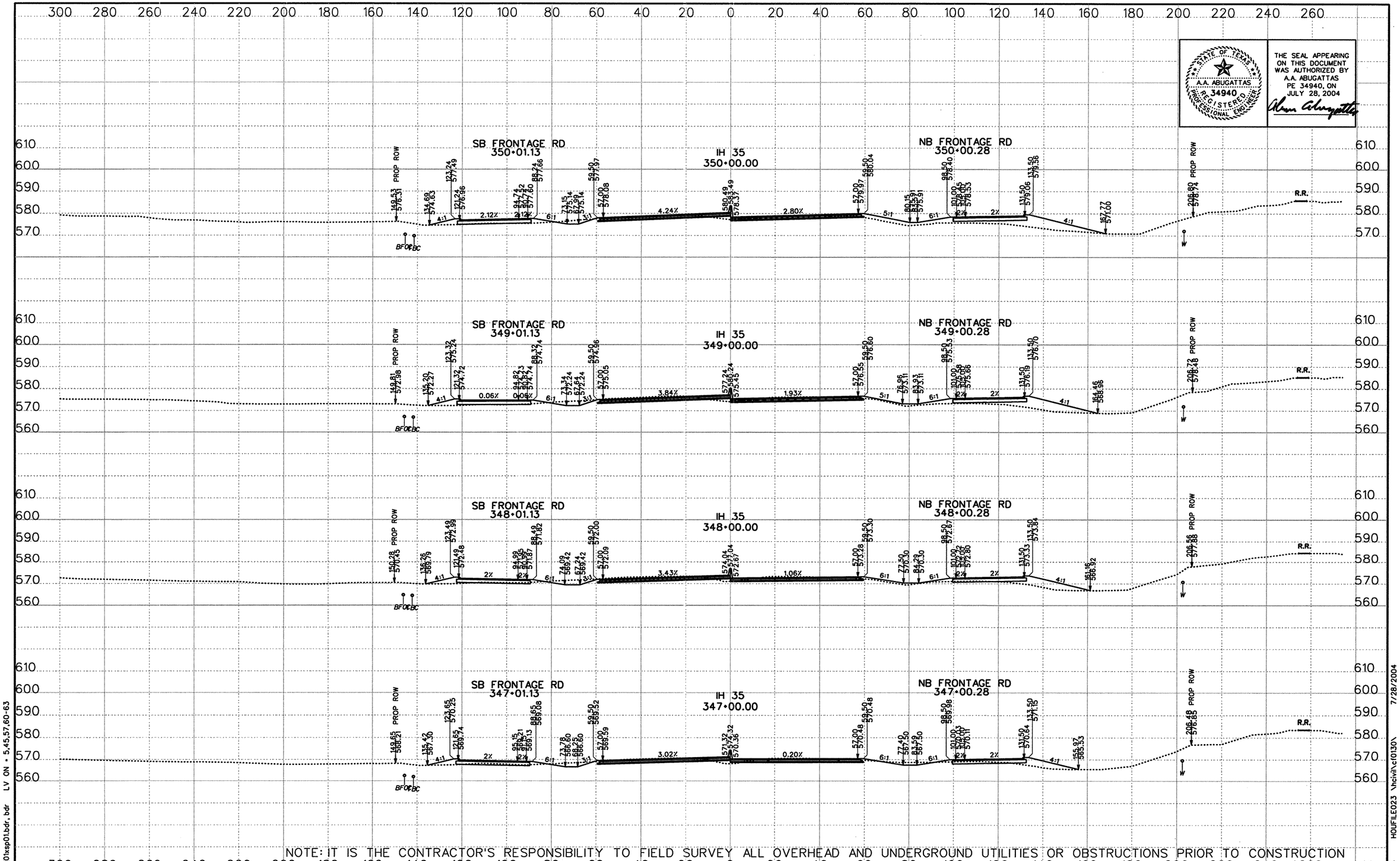

THE SEAL APPEARING ON THIS DOCUMENT WAS AUTHORIZED BY A.A. ABUGATTAS PE 34940, ON JULY 28, 2004

NOTE: IT IS THE CONTRACTOR'S RESPONSIBILITY TO FIELD SURVEY ALL OVERHEAD AND UNDERGROUND UTILITIES OR OBSTRUCTIONS PRIOR TO CONSTRUCTION

DATE	BY	REV

©2003 Texas Department of Transportation

KBR
Engineered by KBR Technical Services, Inc

SCALE:
1" = 40' HORIZ
1" = 40' VERT
0 1/2 1"

IH 35
LOOP 20 TO UNIROYAL ROAD
PROPOSED CROSS SECTIONS

STATE PROJECT NO			FED RD DIV NO		COUNTY	SHEET 64 OF 104
NH-2002 (79)			6		WEBB	
STATE	DIST NO	CONT	SECT	JOB	HIGHWAY NO	SHEET NO
TEXAS	LAREDO	0018	05	062, ETC	IH 35	945

REF FILE(S): j01xsp01.bdr, bdr LV ON = 5,45,57,60-63

XS ROLL .dgn- HOUFILE023 \hcivil\cf0130\ 7/28/2004

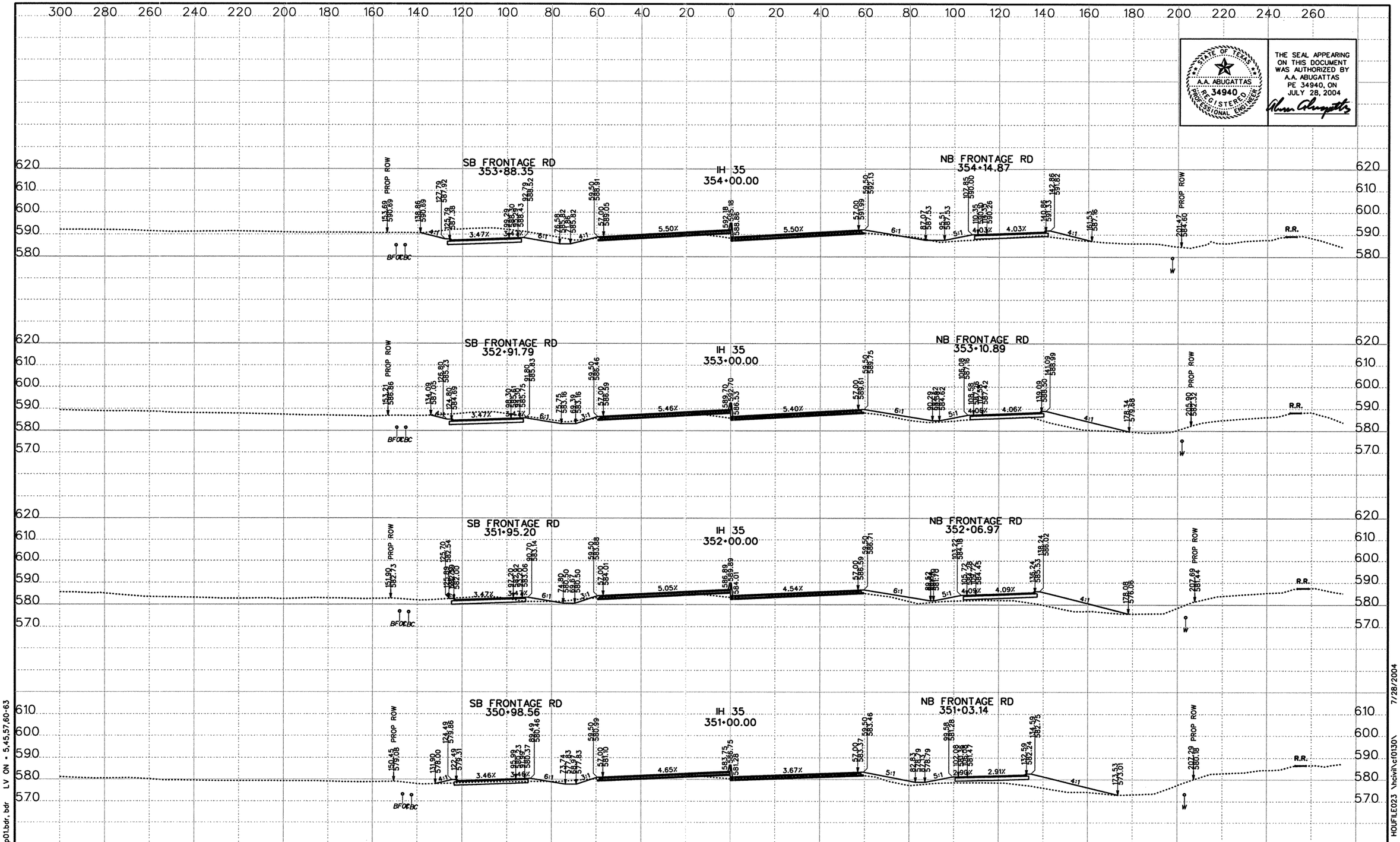

NOTE: IT IS THE CONTRACTOR'S RESPONSIBILITY TO FIELD SURVEY ALL OVERHEAD AND UNDERGROUND UTILITIES OR OBSTRUCTIONS PRIOR TO CONSTRUCTION

DATE	BY	REV

©2003 Texas Department of Transportation

KBR
Engineered by KBR Technical Services, Inc

SCALE:
1" = 40' HORIZ
1" = 40' VERT
0 ½ 1"

IH 35
LOOP 20 TO UNIROYAL ROAD
PROPOSED CROSS SECTIONS

STATE PROJECT NO			FED RD DIV NO		COUNTY	SHEET 65 OF 104
NH-2002 (79)			6		WEBB	
STATE	DIST NO	CONT	SECT	JOB	HIGHWAY NO	SHEET NO
TEXAS	LAREDO	0018	05	062, ETC	IH 35	946

REF FILE(S): j01xsp01.bdr, bdr LV ON = 5,45,57,60-63

XS ROLL .dgn- HOUFILE023 \hcivil\cf0130\ 7/28/2004

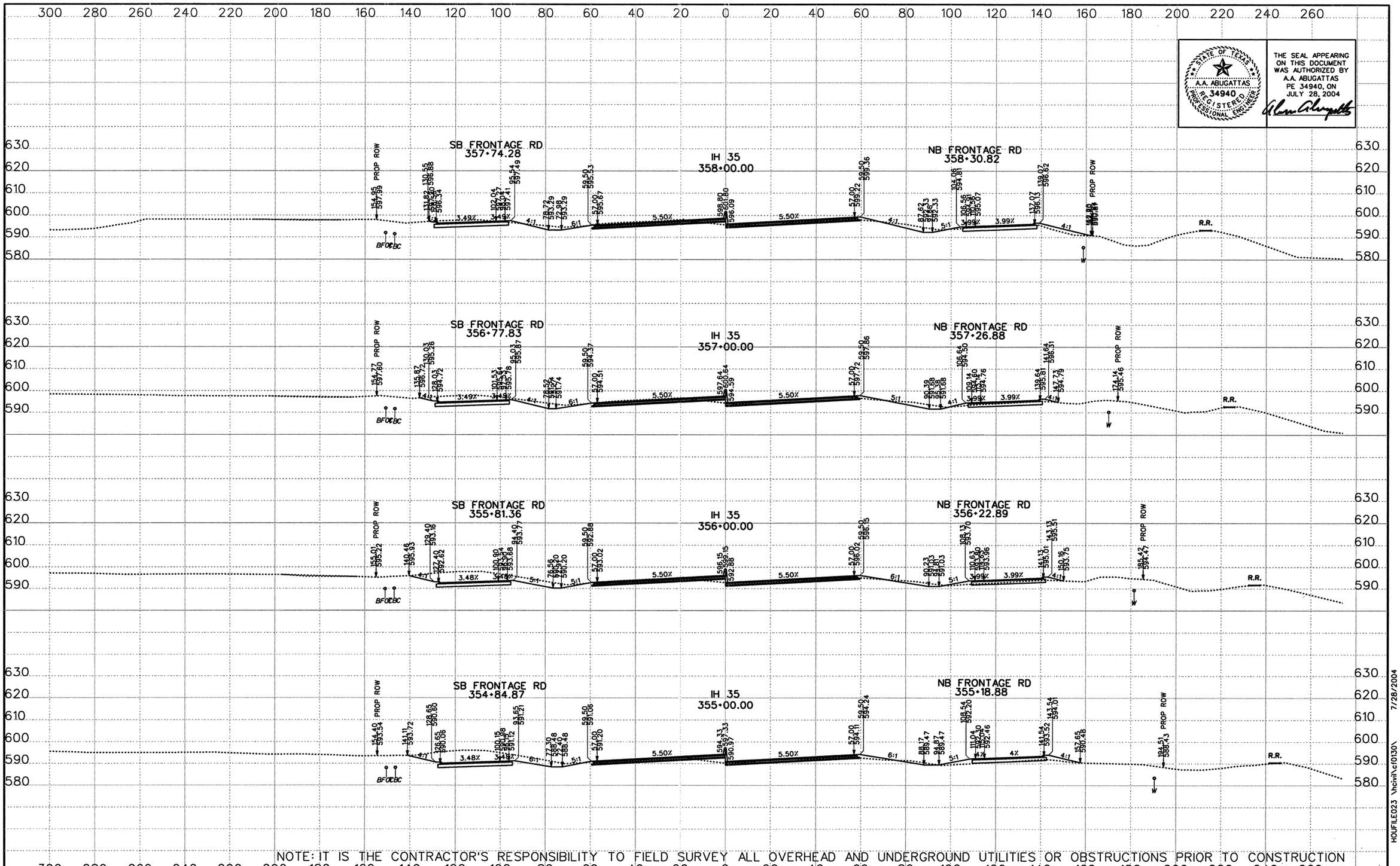

THE SEAL APPEARING ON THIS DOCUMENT WAS AUTHORIZED BY A.A. ABUGATTAS PE 34940, ON JULY 28, 2004

NOTE: IT IS THE CONTRACTOR'S RESPONSIBILITY TO FIELD SURVEY ALL OVERHEAD AND UNDERGROUND UTILITIES OR OBSTRUCTIONS PRIOR TO CONSTRUCTION

DATE	BY	REV

©2003 Texas Department of Transportation

KBR
Engineered by KBR Technical Services, Inc

SCALE:
1" = 40' HORIZ
1" = 40' VERT
0 1/2 1"

IH 35
LOOP 20 TO UNIROYAL ROAD
PROPOSED CROSS SECTIONS

STATE PROJECT NO			FED RD DIV NO		COUNTY	SHEET 66 OF 104
NH-2002 (79)			6		WEBB	
STATE	DIST NO	CONT	SECT	JOB	HIGHWAY NO	SHEET NO
TEXAS	LAREDO	0018	05	062, ETC	IH 35	947

REF FILE(S): j01xsp01.bdr, bdr LV ON = 5,45,57,60-63

HOUFILE023 \hcivil\cf0130\ 7/28/2004 XS ROLL .dgn

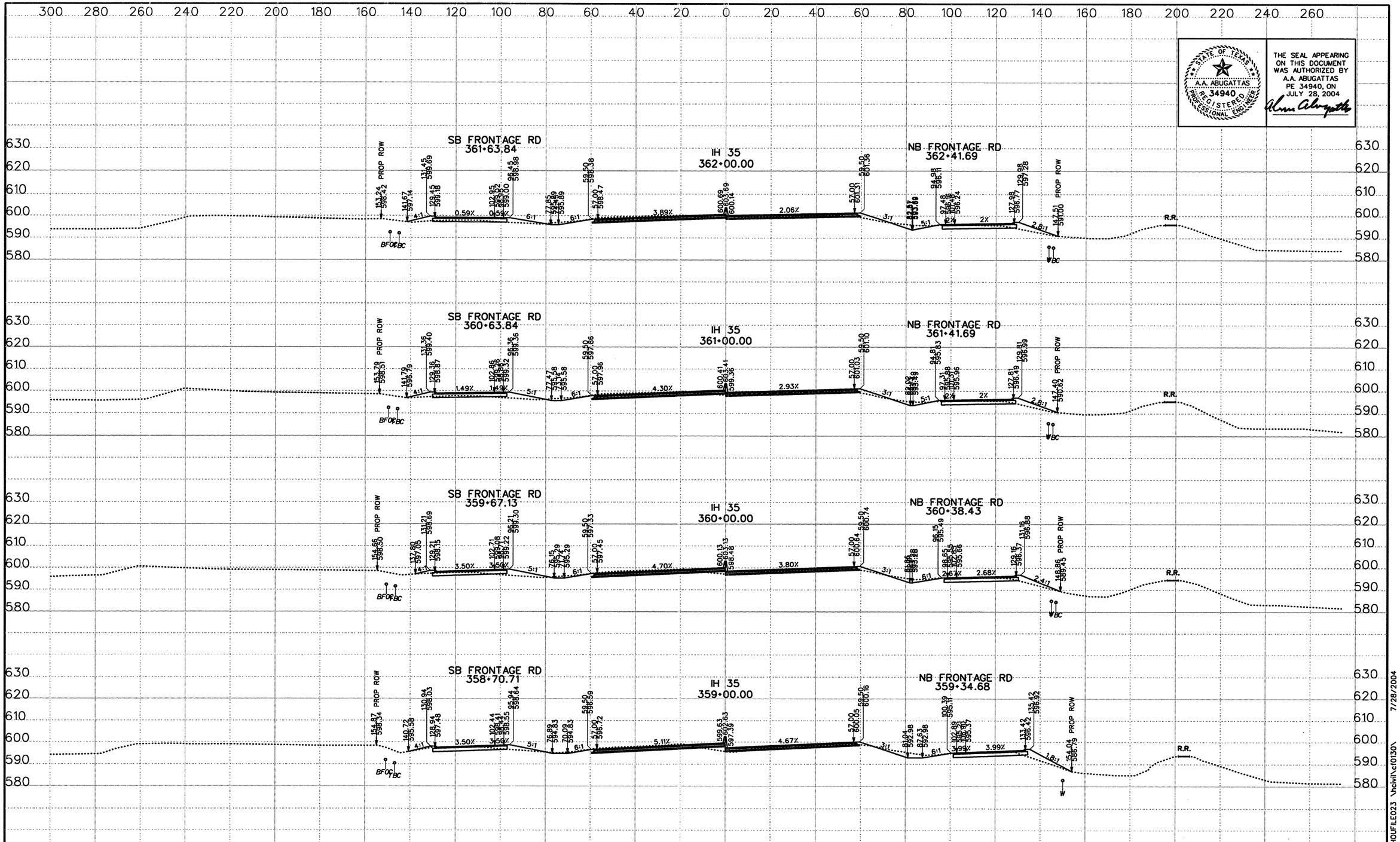

STATE OF TEXAS
A.A. ABUGATTAS
34940
REGISTERED PROFESSIONAL ENGINEER

THE SEAL APPEARING ON THIS DOCUMENT WAS AUTHORIZED BY A.A. ABUGATTAS PE 34940, ON JULY 28, 2004

NOTE: IT IS THE CONTRACTOR'S RESPONSIBILITY TO FIELD SURVEY ALL OVERHEAD AND UNDERGROUND UTILITIES OR OBSTRUCTIONS PRIOR TO CONSTRUCTION

DATE	BY	REV

©2003 Texas Department of Transportation

KBR
Engineered by KBR Technical Services, Inc

SCALE:
1" = 40' HORIZ
1" = 40' VERT
0 1/2 1"

IH 35
LOOP 20 TO UNIROYAL ROAD
PROPOSED CROSS SECTIONS

STATE PROJECT NO			FED RD DIV NO		COUNTY	SHEET 67 OF 104
NH-2002 (79)			6		WEBB	
STATE	DIST NO	CONT	SECT	JOB	HIGHWAY NO	SHEET NO
TEXAS	LAREDO	0018	05	062, ETC	IH 35	948

REF FILE(S): j0\xsp01.bdr, bdr LV ON = 5,45,57,60-63

XS ROLL .dgn- HOUFILE023 \hcivil\cf0130\ 7/28/2004

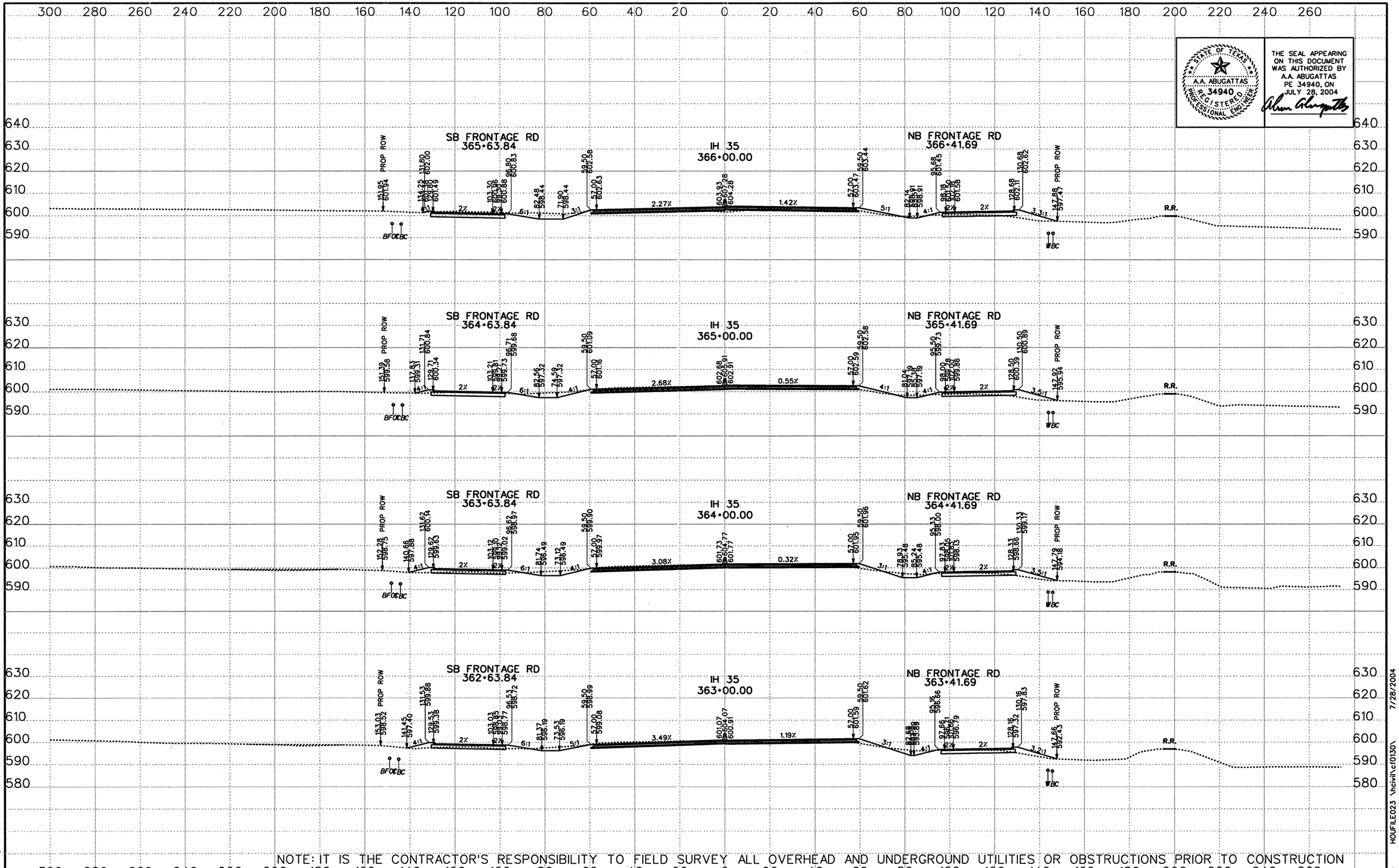

THE SEAL APPEARING ON THIS DOCUMENT WAS AUTHORIZED BY A.A. ABUGATTAS PE 34940, ON JULY 28, 2004

NOTE: IT IS THE CONTRACTOR'S RESPONSIBILITY TO FIELD SURVEY ALL OVERHEAD AND UNDERGROUND UTILITIES OR OBSTRUCTIONS PRIOR TO CONSTRUCTION

DATE	BY	REV

©2003 Texas Department of Transportation

KBR
Engineered by KBR Technical Services, Inc

SCALE: 1" = 40' HORIZ, 1" = 40' VERT

IH 35
LOOP 20 TO UNIROYAL ROAD
PROPOSED CROSS SECTIONS

STATE PROJECT NO			FED RD DIV NO		COUNTY	SHEET 68 OF 104
NH-2002 (79)			6		WEBB	
STATE	DIST NO	CONT	SECT	JOB	HIGHWAY NO	SHEET NO
TEXAS	LAREDO	0018	05	062, ETC	IH 35	949

REF FILE(S): j0xsp01.bdr, bdr LV ON = 5,45,57,60-63

HOUFILE023 \hcivil\cf0130\ 7/28/2004 XS ROLL .dgn-

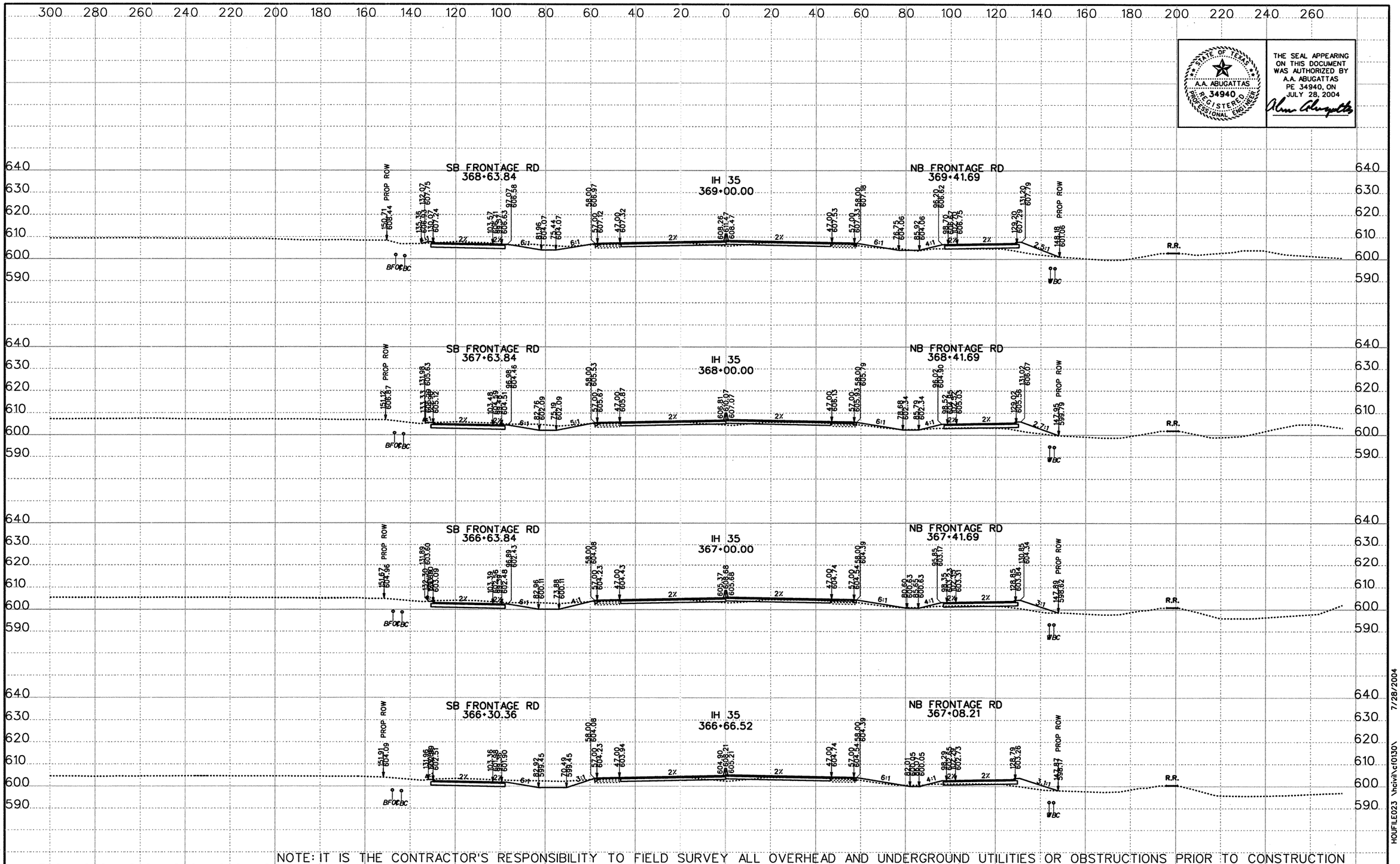

STATE OF TEXAS
A.A. ABUGATTAS
34940
REGISTERED PROFESSIONAL ENGINEER

THE SEAL APPEARING ON THIS DOCUMENT WAS AUTHORIZED BY A.A. ABUGATTAS PE 34940, ON JULY 28, 2004

NOTE: IT IS THE CONTRACTOR'S RESPONSIBILITY TO FIELD SURVEY ALL OVERHEAD AND UNDERGROUND UTILITIES OR OBSTRUCTIONS PRIOR TO CONSTRUCTION

DATE	BY	REV

©2003 Texas Department of Transportation

KBR
Engineered by KBR Technical Services, Inc

SCALE:
1" = 40' HORIZ
1" = 40' VERT
0 1/2 1"

IH 35
LOOP 20 TO UNIROYAL ROAD
PROPOSED CROSS SECTIONS

STATE PROJECT NO			FED RD DIV NO		COUNTY	SHEET 69 OF 104
NH-2002 (79)			6		WEBB	
STATE	DIST NO	CONT	SECT	JOB	HIGHWAY NO	SHEET NO
TEXAS	LAREDO	0018	05	062, ETC	IH 35	950

REF FILE(S): j01xsp01.bdr, bdr LV ON = 5,45,57,60-63

HOUFILE023 \hcivil\cf0130\ 7/28/2004

XS ROLL .dgn-

THE SEAL APPEARING ON THIS DOCUMENT WAS AUTHORIZED BY A.A. ABUGATTAS PE 34940, ON JULY 28, 2004

STATE OF TEXAS — A.A. ABUGATTAS — 34940 — REGISTERED PROFESSIONAL ENGINEER

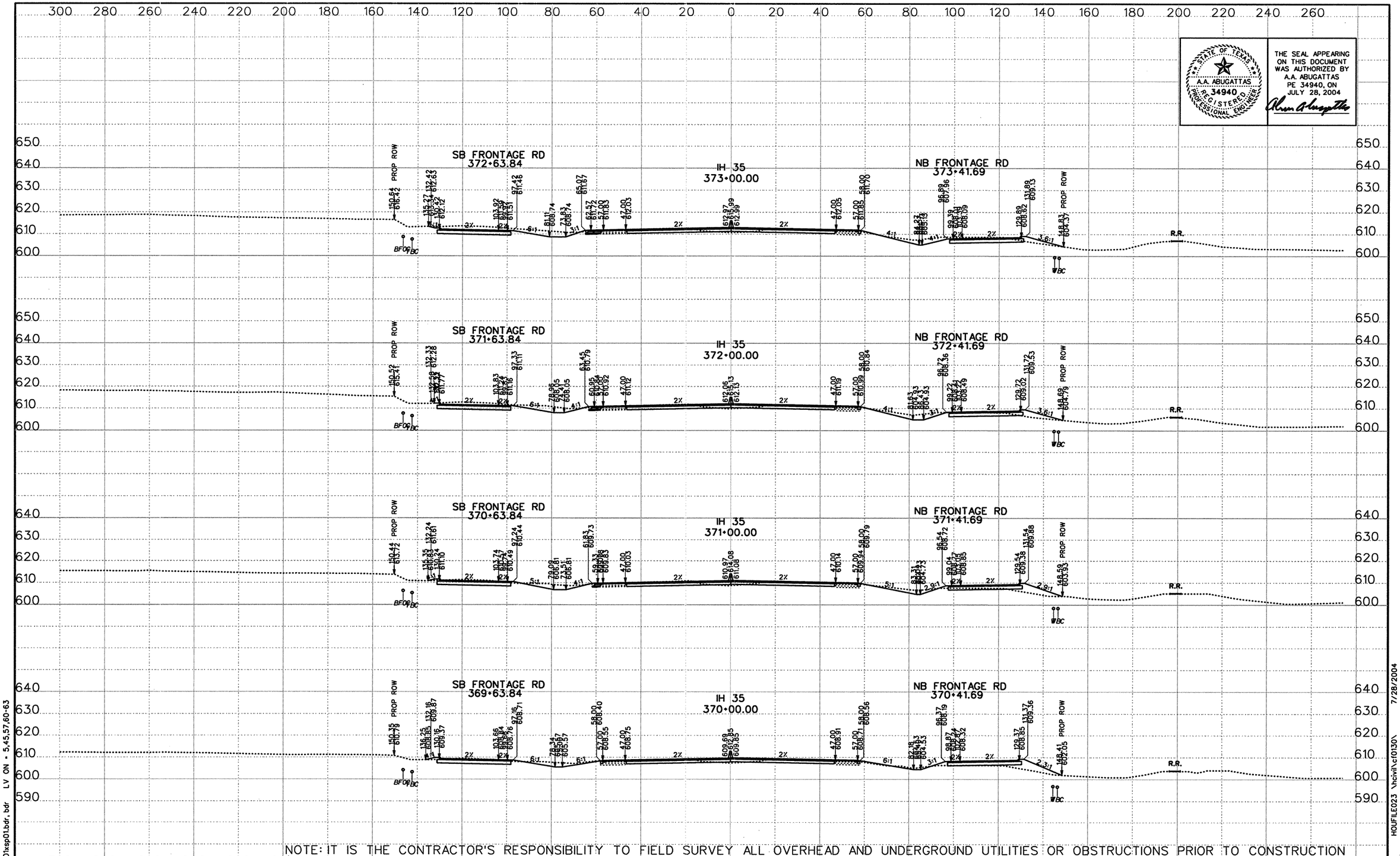

NOTE: IT IS THE CONTRACTOR'S RESPONSIBILITY TO FIELD SURVEY ALL OVERHEAD AND UNDERGROUND UTILITIES OR OBSTRUCTIONS PRIOR TO CONSTRUCTION

DATE	BY	REV

©2003 Texas Department of Transportation

KBR
Engineered by KBR Technical Services, Inc

SCALE:
1" = 40' HORIZ
1" = 40' VERT
0 1/2 1"

IH 35
LOOP 20 TO UNIROYAL ROAD
PROPOSED CROSS SECTIONS

STATE PROJECT NO			FED RD DIV NO		COUNTY	SHEET 70 OF 104
NH-2002 (79)			6		WEBB	
STATE	DIST NO	CONT	SECT	JOB	HIGHWAY NO	SHEET NO
TEXAS	LAREDO	0018	05	062, ETC	IH 35	951

REF FILE(S): j01xsp01.bdr, bdr LV ON = 5,45,57,60-63

XS ROLL .dgn- HOUFILE023 \hcivil\cf0130\ 7/28/2004

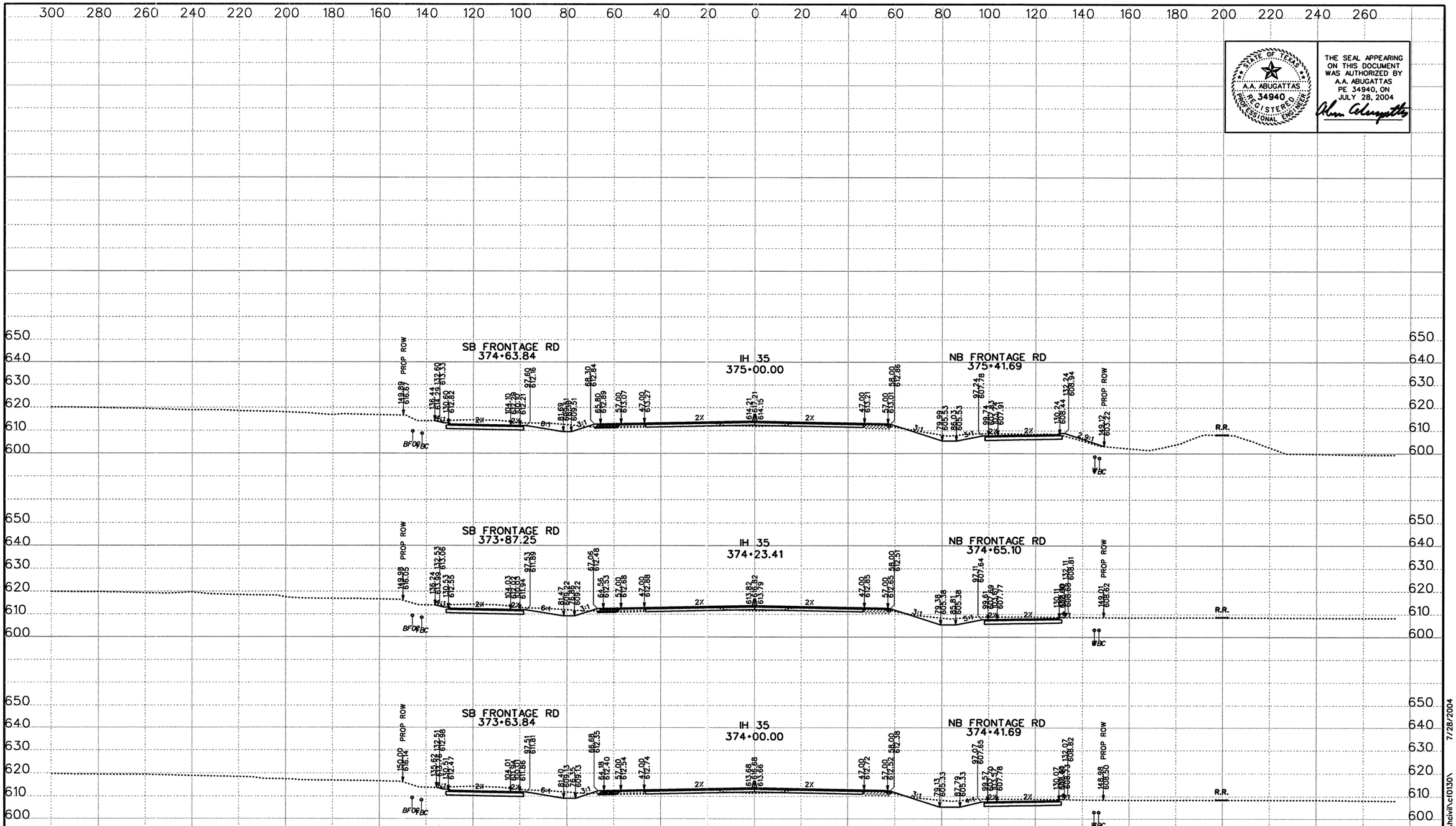

THE SEAL APPEARING ON THIS DOCUMENT WAS AUTHORIZED BY A.A. ABUGATTAS PE 34940, ON JULY 28, 2004

NOTE: IT IS THE CONTRACTOR'S RESPONSIBILITY TO FIELD SURVEY ALL OVERHEAD AND UNDERGROUND UTILITIES OR OBSTRUCTIONS PRIOR TO CONSTRUCTION

DATE	BY	REV

©2003 Texas Department of Transportation

KBR
Engineered by KBR Technical Services, Inc

SCALE:
1" = 40' HORIZ
1" = 40' VERT
0 1/2 1"

IH 35
LOOP 20 TO UNIROYAL ROAD
PROPOSED CROSS SECTIONS

STATE PROJECT NO			FED RD DIV NO		COUNTY	SHEET 71 OF 104
NH-2002 (79)			6		WEBB	
STATE	DIST NO	CONT	SECT	JOB	HIGHWAY NO	SHEET NO
TEXAS	LAREDO	0018	05	062, ETC	IH 35	952

REF FILE(S): j01xsp01.bdr, bdr LV ON = 5,45,57,60-63

XS ROLL .dgn- HOUFILE023 \hcivil\cf0130\ 7/28/2004

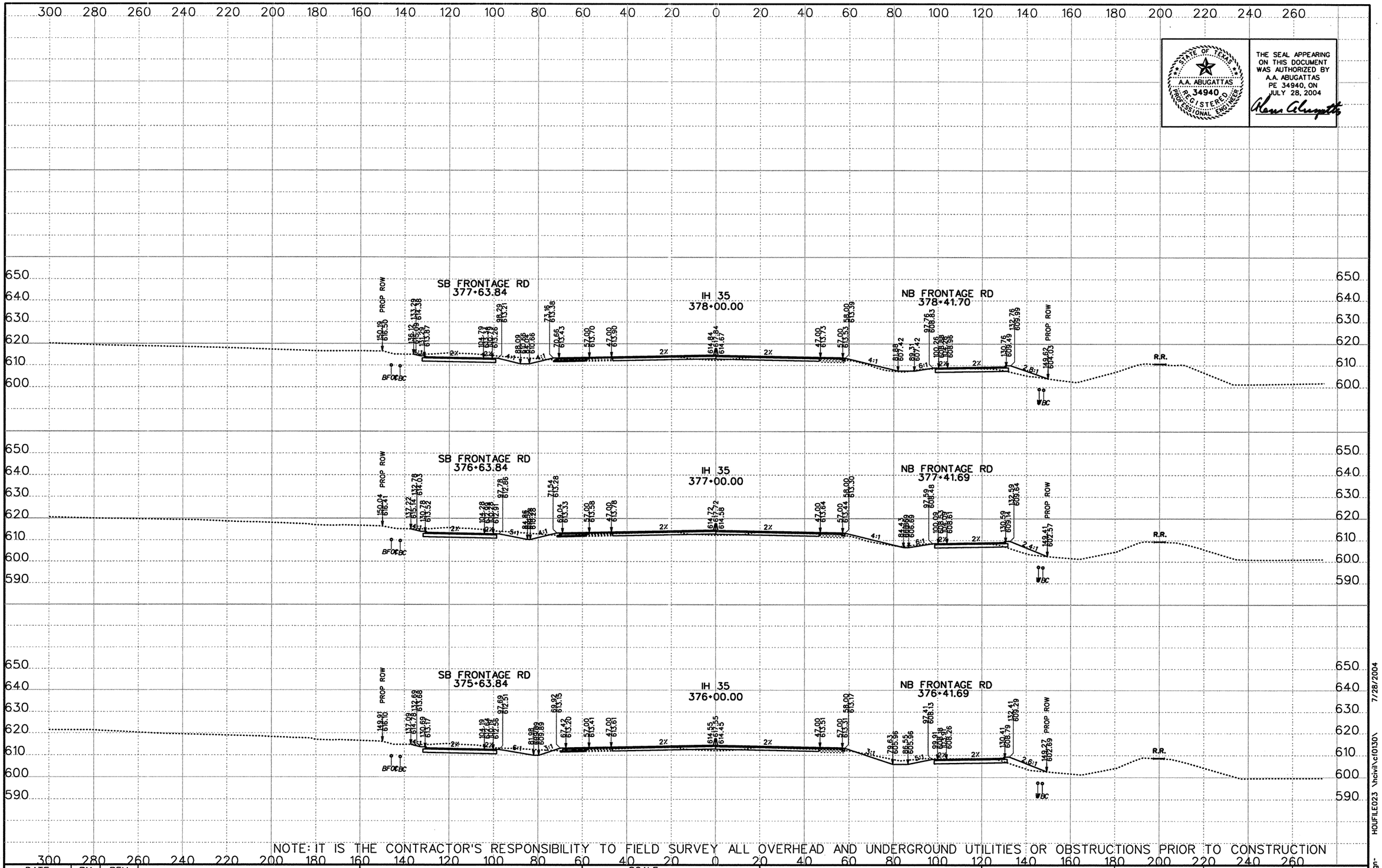

NOTE: IT IS THE CONTRACTOR'S RESPONSIBILITY TO FIELD SURVEY ALL OVERHEAD AND UNDERGROUND UTILITIES OR OBSTRUCTIONS PRIOR TO CONSTRUCTION

STATE OF TEXAS
A.A. ABUGATTAS
PE 34940
REGISTERED PROFESSIONAL ENGINEER

THE SEAL APPEARING ON THIS DOCUMENT WAS AUTHORIZED BY A.A. ABUGATTAS PE 34940, ON JULY 28, 2004

DATE	BY	REV

©2003 Texas Department of Transportation

KBR
Engineered by KBR Technical Services, Inc

SCALE:
1" = 40' HORIZ
1" = 40' VERT
0 1/2 1"

IH 35
LOOP 20 TO UNIROYAL ROAD
PROPOSED CROSS SECTIONS

STATE PROJECT NO			FED RD DIV NO		COUNTY	SHEET 72 OF 104
NH-2002 (79)			6		WEBB	
STATE	DIST NO	CONT	SECT	JOB	HIGHWAY NO	SHEET NO
TEXAS	LAREDO	0018	05	062, ETC	IH 35	953

REF FILE(S): j01xsp01.bdr, bdr LV ON = 5,45,57,60-63

HOUFILE023 \hcivil\cf0130\ 7/28/2004

XS ROLL .dgn

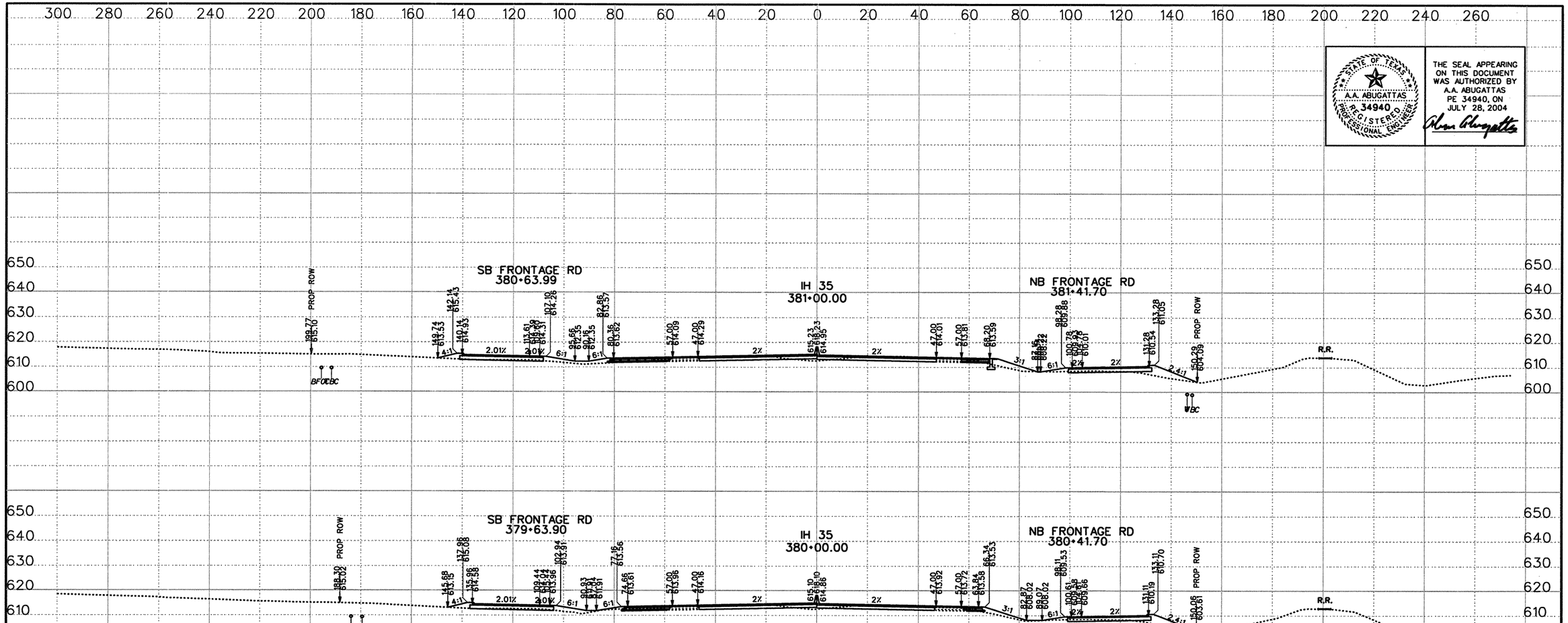

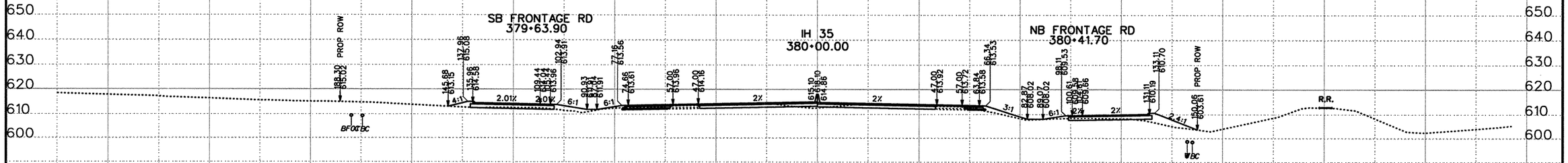

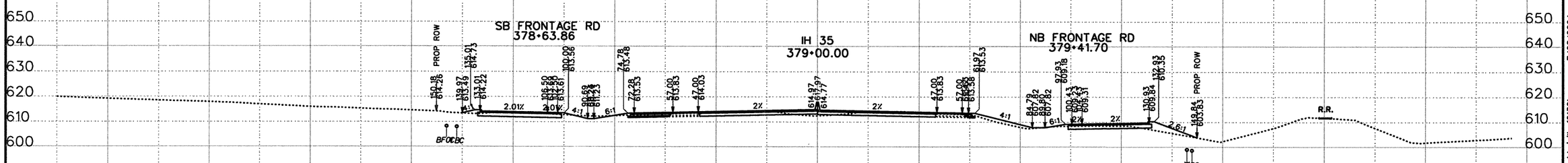

STATE OF TEXAS
A.A. ABUGATTAS
34940
REGISTERED PROFESSIONAL ENGINEER

THE SEAL APPEARING ON THIS DOCUMENT WAS AUTHORIZED BY A.A. ABUGATTAS PE 34940, ON JULY 28, 2004

NOTE: IT IS THE CONTRACTOR'S RESPONSIBILITY TO FIELD SURVEY ALL OVERHEAD AND UNDERGROUND UTILITIES OR OBSTRUCTIONS PRIOR TO CONSTRUCTION

DATE	BY	REV

©2003 Texas Department of Transportation

KBR
Engineered by KBR Technical Services, Inc

SCALE:
1" = 40' HORIZ
1" = 40' VERT
0 1/2 1"

IH 35
LOOP 20 TO UNIROYAL ROAD
PROPOSED CROSS SECTIONS

STATE PROJECT NO			FED RD DIV NO		COUNTY	SHEET 73 OF 104
NH-2002 (79)			6		WEBB	
STATE	DIST NO	CONT	SECT	JOB	HIGHWAY NO	SHEET NO
TEXAS	LAREDO	0018	05	062, ETC	IH 35	954

REF FILE(S): j01xsp01.bdr, bdr LV ON = 5,45,57,60-63

XS ROLL .dgn- HOUFILE023 \hcivil\cf0130\ 7/28/2004

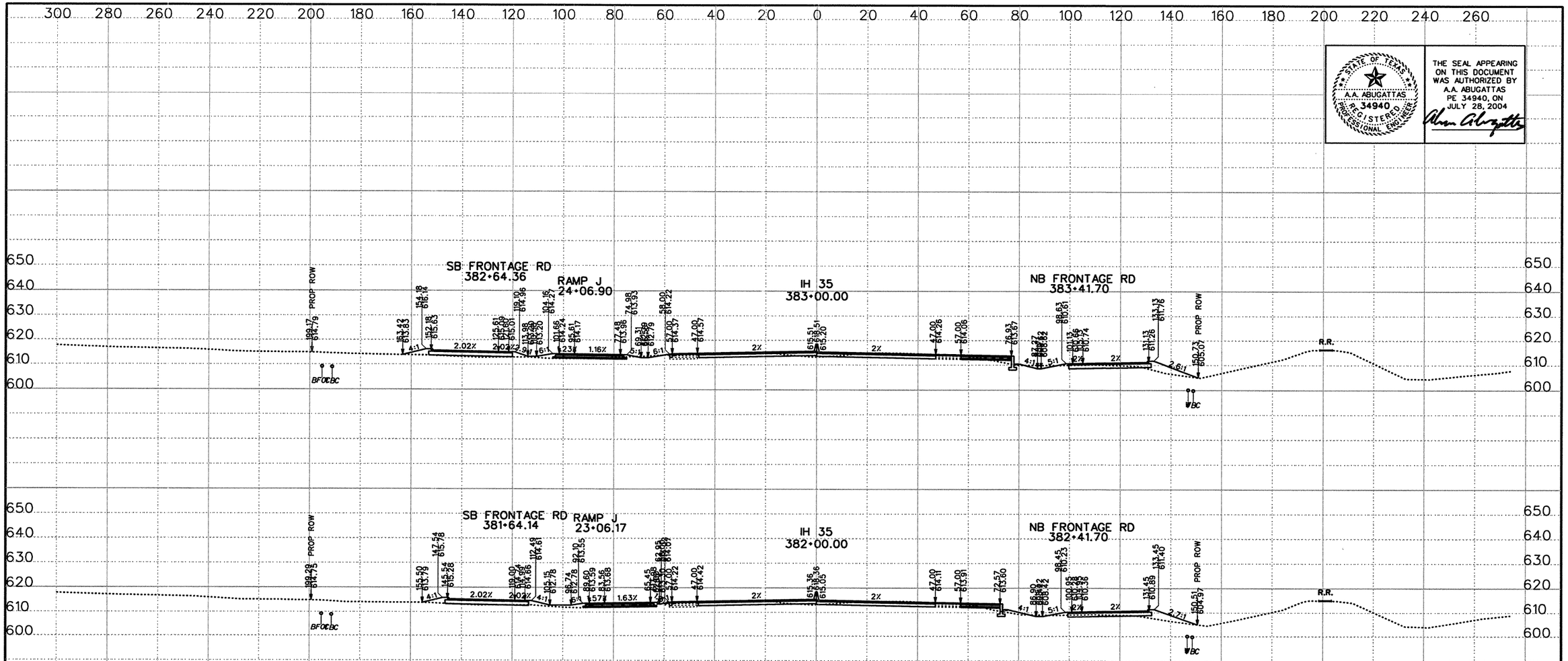

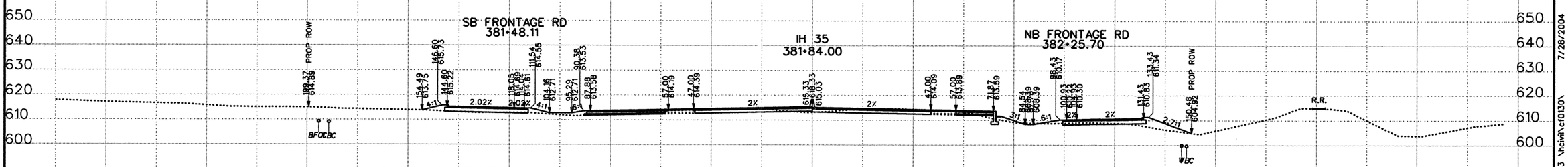

STATE OF TEXAS
A.A. ABUGATTAS
34940
REGISTERED PROFESSIONAL ENGINEER

THE SEAL APPEARING ON THIS DOCUMENT WAS AUTHORIZED BY A.A. ABUGATTAS PE 34940, ON JULY 28, 2004

NOTE: IT IS THE CONTRACTOR'S RESPONSIBILITY TO FIELD SURVEY ALL OVERHEAD AND UNDERGROUND UTILITIES OR OBSTRUCTIONS PRIOR TO CONSTRUCTION

DATE	BY	REV

©2003 Texas Department of Transportation

KBR
Engineered by KBR Technical Services, Inc

SCALE:
1" = 40' HORIZ
1" = 40' VERT
0 1/2 1"

IH 35
LOOP 20 TO UNIROYAL ROAD
PROPOSED CROSS SECTIONS

STATE PROJECT NO			FED RD DIV NO		COUNTY	SHEET 74 OF 104
NH-2002 (79)			6		WEBB	
STATE	DIST NO	CONT	SECT	JOB	HIGHWAY NO	SHEET NO
TEXAS	LAREDO	0018	05	062, ETC	IH 35 .	955

REF FILE(S): j01xsp01.bdr, bdr LV ON = 5,45,57,60-63

XS ROLL .dgn- HOUFILE023 \hcivil\cf0130\ 7/28/2004

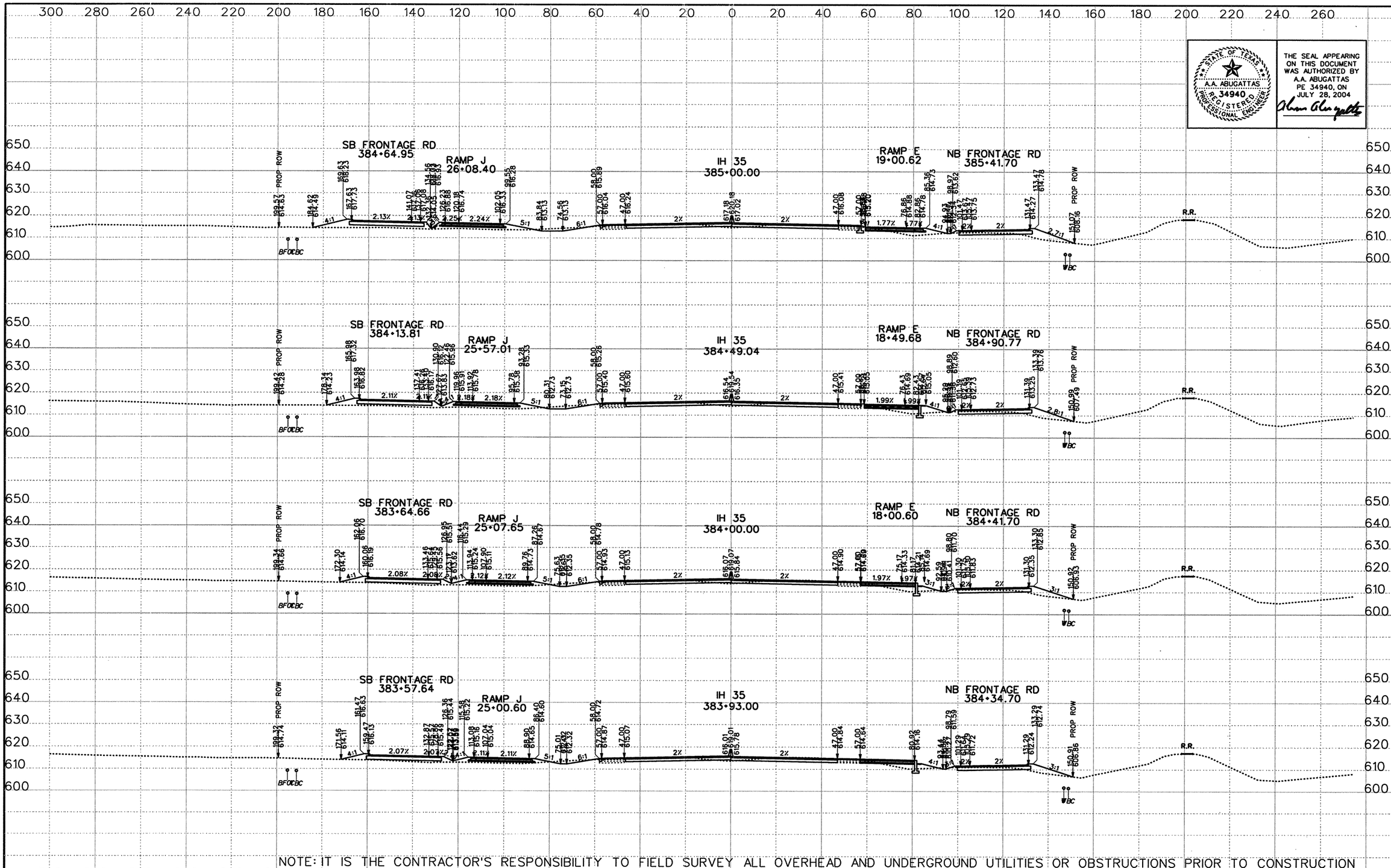

STATE OF TEXAS
A.A. ABUGATTAS
34940
REGISTERED PROFESSIONAL ENGINEER

THE SEAL APPEARING ON THIS DOCUMENT WAS AUTHORIZED BY A.A. ABUGATTAS PE 34940, ON JULY 28, 2004

NOTE: IT IS THE CONTRACTOR'S RESPONSIBILITY TO FIELD SURVEY ALL OVERHEAD AND UNDERGROUND UTILITIES OR OBSTRUCTIONS PRIOR TO CONSTRUCTION

DATE	BY	REV

©2003 Texas Department of Transportation

KBR
Engineered by KBR Technical Services, Inc

SCALE:
1" = 40' HORIZ
1" = 40' VERT
0 1/2 1"

IH 35
LOOP 20 TO UNIROYAL ROAD
PROPOSED CROSS SECTIONS

STATE PROJECT NO			FED RD DIV NO		COUNTY	SHEET 75 OF 104
NH-2002 (79)			6		WEBB	
STATE	DIST NO	CONT	SECT	JOB	HIGHWAY NO	SHEET NO
TEXAS	LAREDO	0018	05	062, ETC	IH 35	956

REF FILE(S): j0ixsp01.bdr, bdr LV ON = 5,45,57,60-63

HOUFILE023 \hcivil\c10130\ 7/28/2004

XS ROLL .dgn-

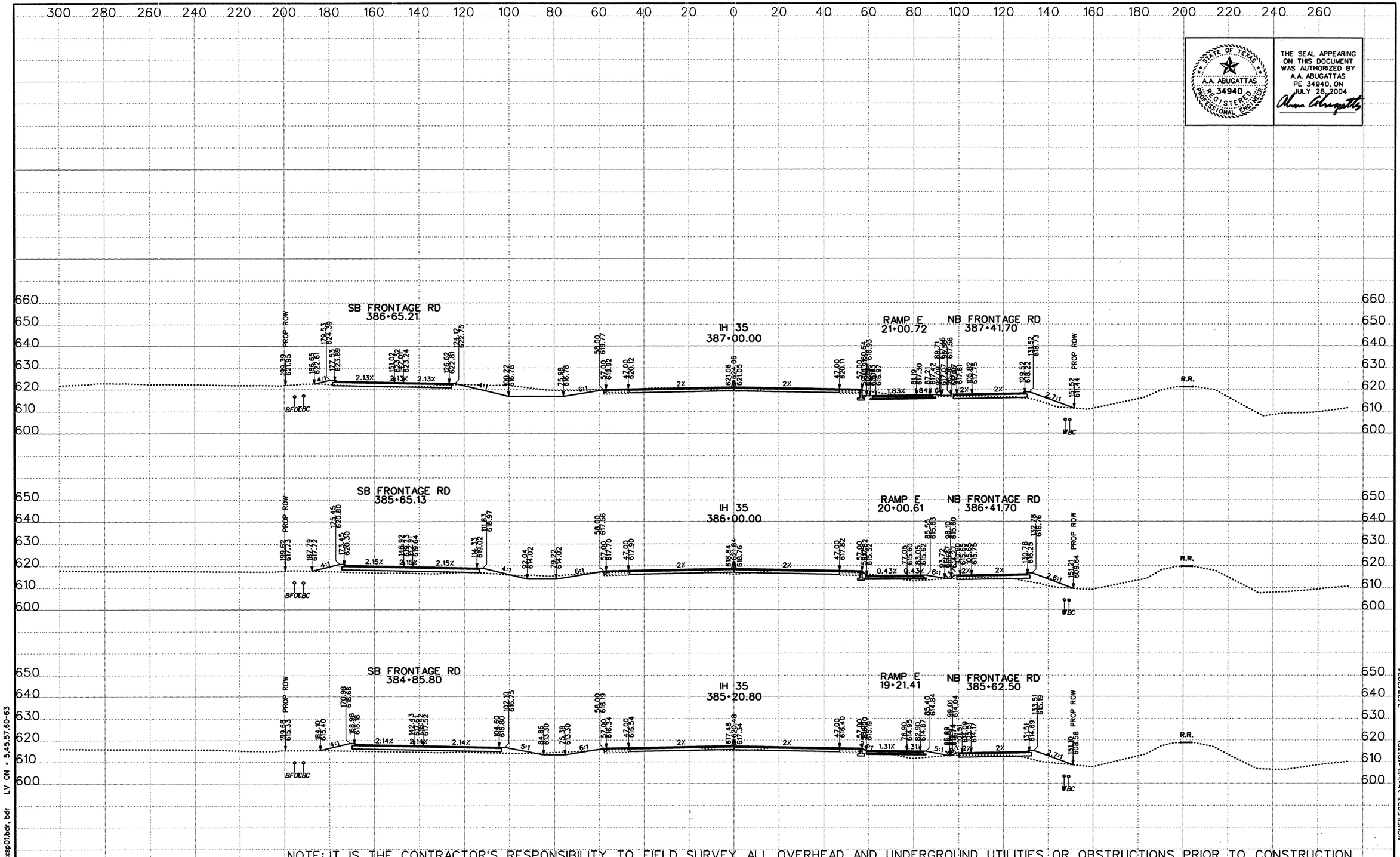

STATE OF TEXAS
A.A. ABUGATTAS
R.P.E. 34940
REGISTERED PROFESSIONAL ENGINEER

THE SEAL APPEARING ON THIS DOCUMENT WAS AUTHORIZED BY A.A. ABUGATTAS PE 34940, ON JULY 28, 2004

NOTE: IT IS THE CONTRACTOR'S RESPONSIBILITY TO FIELD SURVEY ALL OVERHEAD AND UNDERGROUND UTILITIES OR OBSTRUCTIONS PRIOR TO CONSTRUCTION

DATE	BY	REV

©2003 Texas Department of Transportation

KBR
Engineered by KBR Technical Services, Inc

SCALE:
1" = 40' HORIZ
1" = 40' VERT
0 1/2 1"

IH 35
LOOP 20 TO UNIROYAL ROAD
PROPOSED CROSS SECTIONS

STATE PROJECT NO			FED RD DIV NO		COUNTY	SHEET 76 OF 104
NH-2002 (79)			6		WEBB	
STATE	DIST NO	CONT	SECT	JOB	HIGHWAY NO	SHEET NO
TEXAS	LAREDO	0018	05	062, ETC	IH 35	957

REF FILE(S): j01xsp01.bdr, bdr LV ON = 5,45,57,60-63

HOUFILE023 \hcivil\cf0130\ 7/28/2004

XS ROLL .dgn

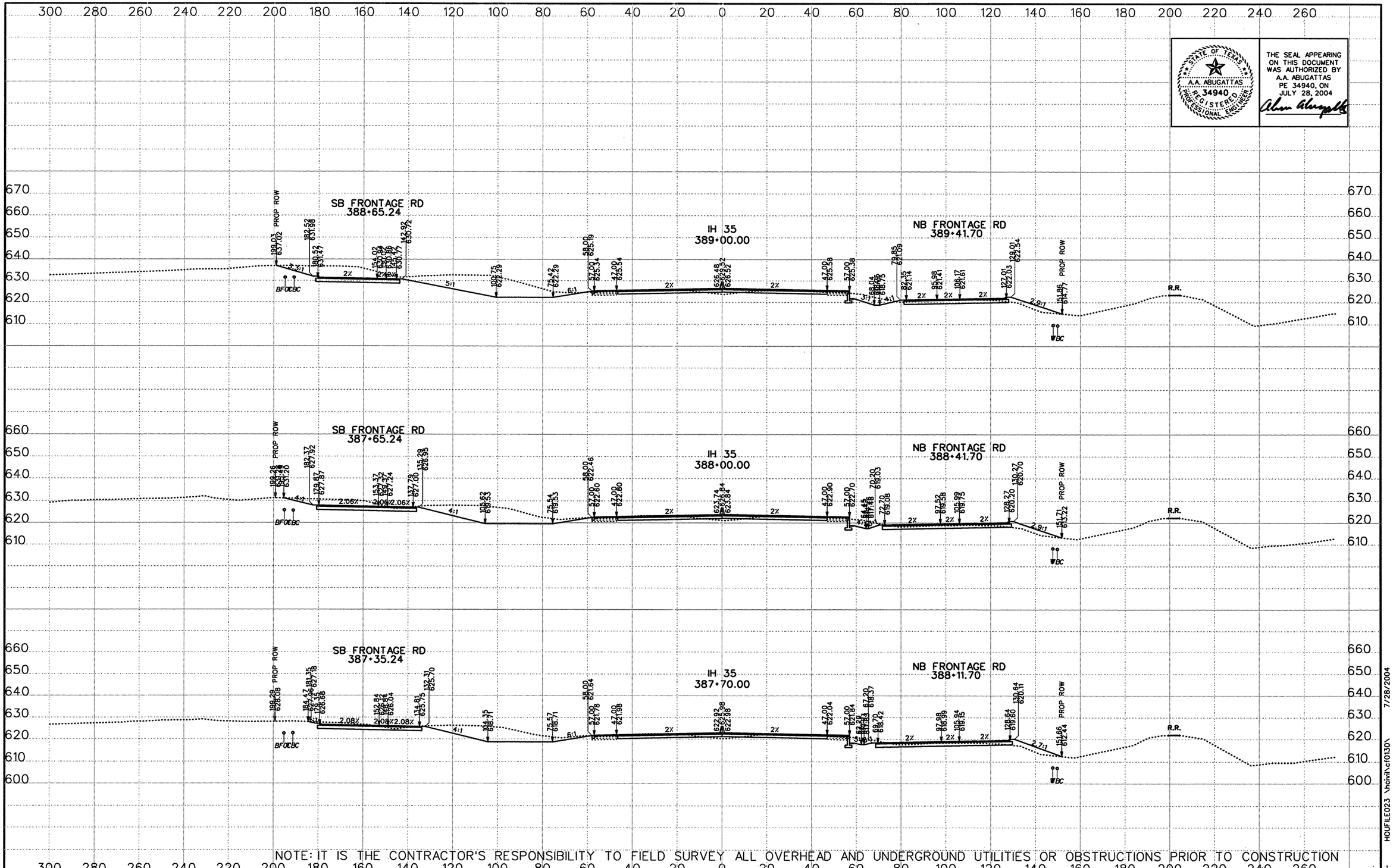

THE SEAL APPEARING ON THIS DOCUMENT WAS AUTHORIZED BY A.A. ABUGATTAS PE 34940, ON JULY 28, 2004

NOTE: IT IS THE CONTRACTOR'S RESPONSIBILITY TO FIELD SURVEY ALL OVERHEAD AND UNDERGROUND UTILITIES OR OBSTRUCTIONS PRIOR TO CONSTRUCTION

DATE	BY	REV

©2003 Texas Department of Transportation

KBR
Engineered by KBR Technical Services, Inc

SCALE:
1" = 40' HORIZ
1" = 40' VERT
0 1/2 1"

IH 35
LOOP 20 TO UNIROYAL ROAD
PROPOSED CROSS SECTIONS

STATE PROJECT NO			FED RD DIV NO		COUNTY	SHEET 77 OF 104
NH-2002 (79)			6		WEBB	
STATE	DIST NO	CONT	SECT	JOB	HIGHWAY NO	SHEET NO
TEXAS	LAREDO	0018	05	062, ETC	IH 35	958

REF FILE(S): j01xsp01.bdr, bdr LV ON - 5,45,57,60-63

HOUFILE023 \hcivil\cf0130\ 7/28/2004

XS ROLL .dgn-

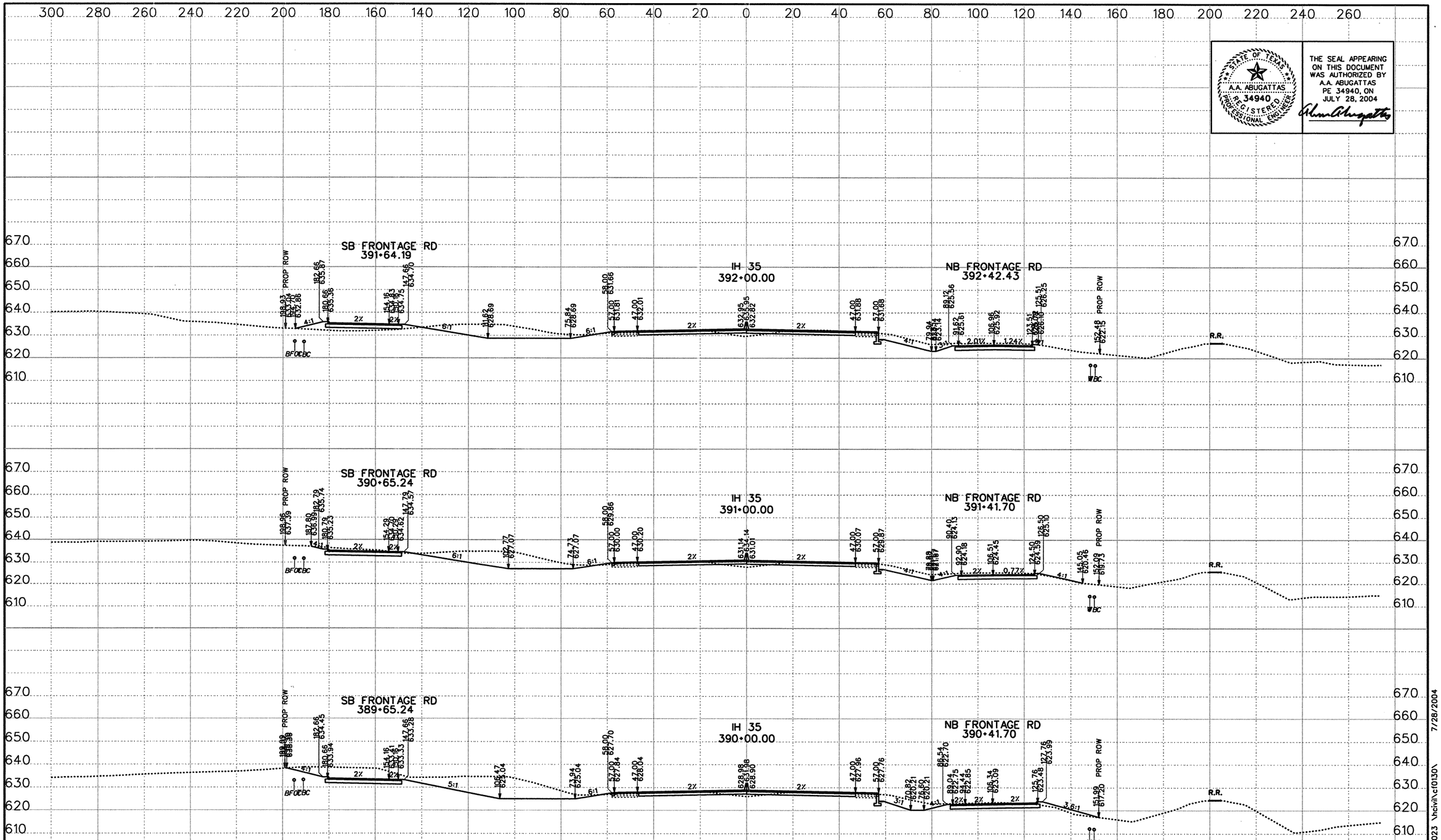

NOTE: IT IS THE CONTRACTOR'S RESPONSIBILITY TO FIELD SURVEY ALL OVERHEAD AND UNDERGROUND UTILITIES OR OBSTRUCTIONS PRIOR TO CONSTRUCTION

STATE OF TEXAS
A.A. ABUGATTAS
34940
REGISTERED PROFESSIONAL ENGINEER

THE SEAL APPEARING ON THIS DOCUMENT WAS AUTHORIZED BY A.A. ABUGATTAS PE 34940, ON JULY 28, 2004

DATE	BY	REV

©2003 Texas Department of Transportation

KBR
Engineered by KBR Technical Services, Inc

SCALE:
1" = 40' HORIZ
1" = 40' VERT
0 1/2 1"

IH 35
LOOP 20 TO UNIROYAL ROAD
PROPOSED CROSS SECTIONS

STATE PROJECT NO			FED RD DIV NO		COUNTY	SHEET 78 OF 104
NH-2002 (79)			6		WEBB	
STATE	DIST NO	CONT	SECT	JOB	HIGHWAY NO	SHEET NO
TEXAS	LAREDO	0018	05	062, ETC	IH 35	959

REF FILE(S): j01xsp01.bdr, bdr LV ON = 5,45,57,60-63

HOUFILE023 \hcivil\cf0130\ 7/28/2004

XS ROLL .dgn-

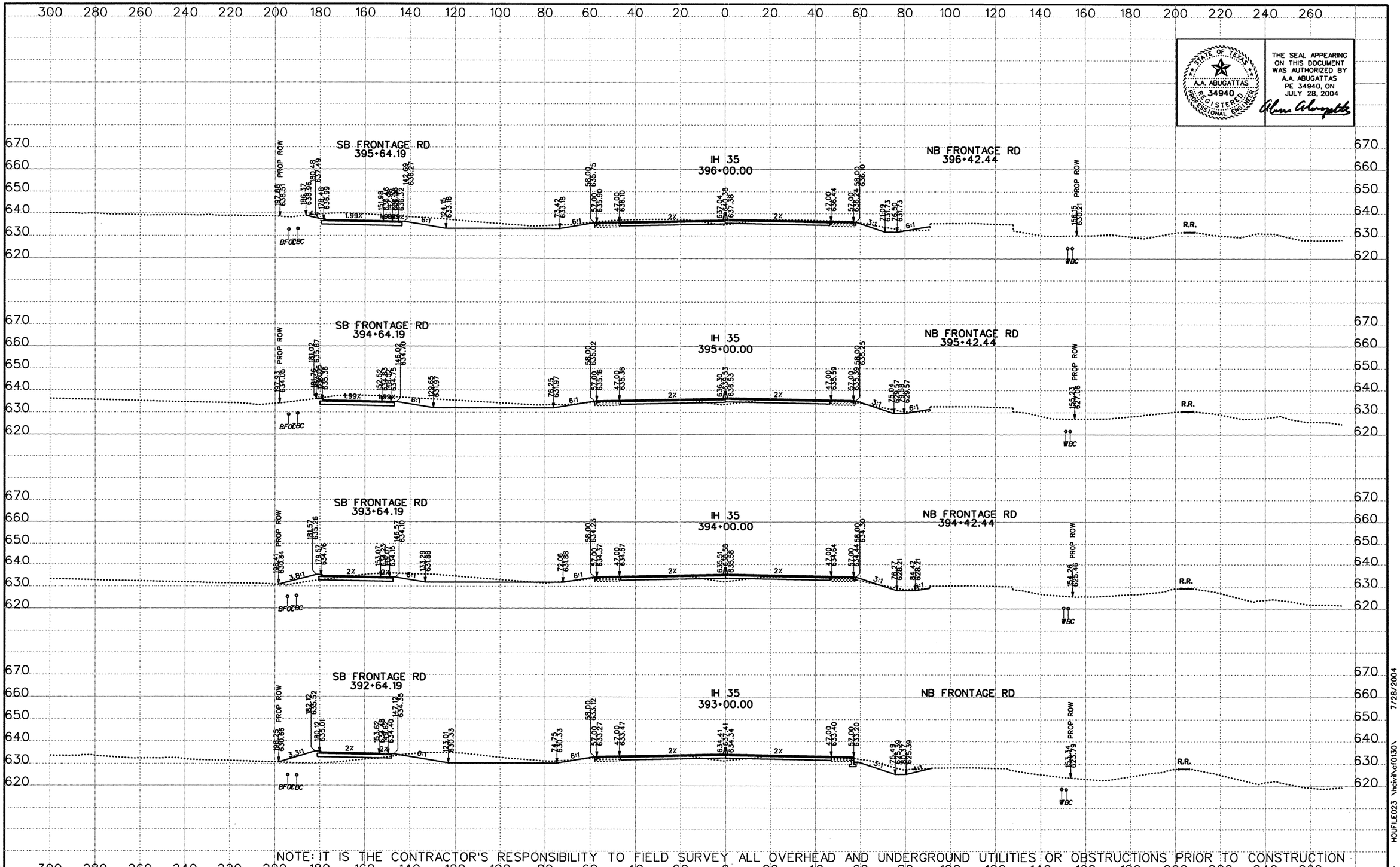

THE SEAL APPEARING ON THIS DOCUMENT WAS AUTHORIZED BY A.A. ABUGATTAS PE 34940, ON JULY 28, 2004

NOTE: IT IS THE CONTRACTOR'S RESPONSIBILITY TO FIELD SURVEY ALL OVERHEAD AND UNDERGROUND UTILITIES OR OBSTRUCTIONS PRIOR TO CONSTRUCTION

DATE	BY	REV

©2003 Texas Department of Transportation

KBR
Engineered by KBR Technical Services, Inc

SCALE:
1" = 40' HORIZ
1" = 40' VERT
0 1/2 1"

IH 35
LOOP 20 TO UNIROYAL ROAD
PROPOSED CROSS SECTIONS

STATE PROJECT NO			FED RD DIV NO		COUNTY	SHEET 79 OF 104
NH-2002 (79)			6		WEBB	
STATE	DIST NO	CONT	SECT	JOB	HIGHWAY NO	SHEET NO
TEXAS	LAREDO	0018	05	062, ETC	IH 35	960

REF FILE(S): j01xsp01.bdr, bdr LV ON = 5,45,57,60-63

XS ROLL .dgn- HOUFILE023 \hcivil\cf0130\ 7/28/2004

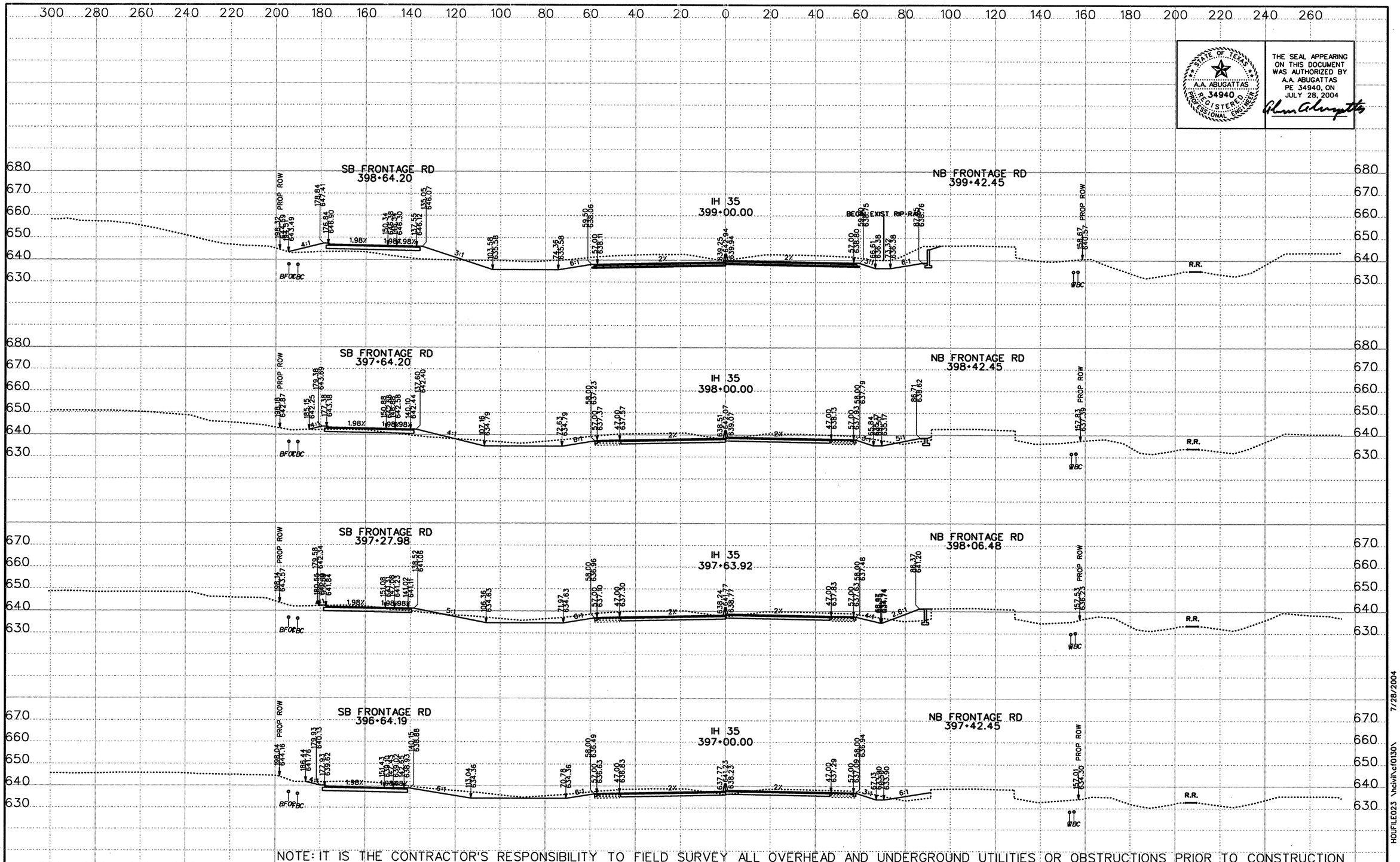

STATE OF TEXAS
A.A. ABUGATTAS
34940
REGISTERED PROFESSIONAL ENGINEER

THE SEAL APPEARING ON THIS DOCUMENT WAS AUTHORIZED BY A.A. ABUGATTAS PE 34940, ON JULY 28, 2004

NOTE: IT IS THE CONTRACTOR'S RESPONSIBILITY TO FIELD SURVEY ALL OVERHEAD AND UNDERGROUND UTILITIES OR OBSTRUCTIONS PRIOR TO CONSTRUCTION

DATE	BY	REV

©2003 Texas Department of Transportation

KBR
Engineered by KBR Technical Services, Inc

SCALE:
1" = 40' HORIZ
1" = 40' VERT
0 1/2 1"

IH 35
LOOP 20 TO UNIROYAL ROAD
PROPOSED CROSS SECTIONS

STATE PROJECT NO			FED RD DIV NO		COUNTY	SHEET 80 OF 104
NH-2002 (79)			6		WEBB	
STATE	DIST NO	CONT	SECT	JOB	HIGHWAY NO	SHEET NO
TEXAS	LAREDO	0018	05	062, ETC	IH 35	961

REF FILE(S): j01xsp01.bdr, bdr LV ON = 5,45,57,60-63

HOUFILE023 \hcivil\c(f0130\ 7/28/2004

XS ROLL .dgn-

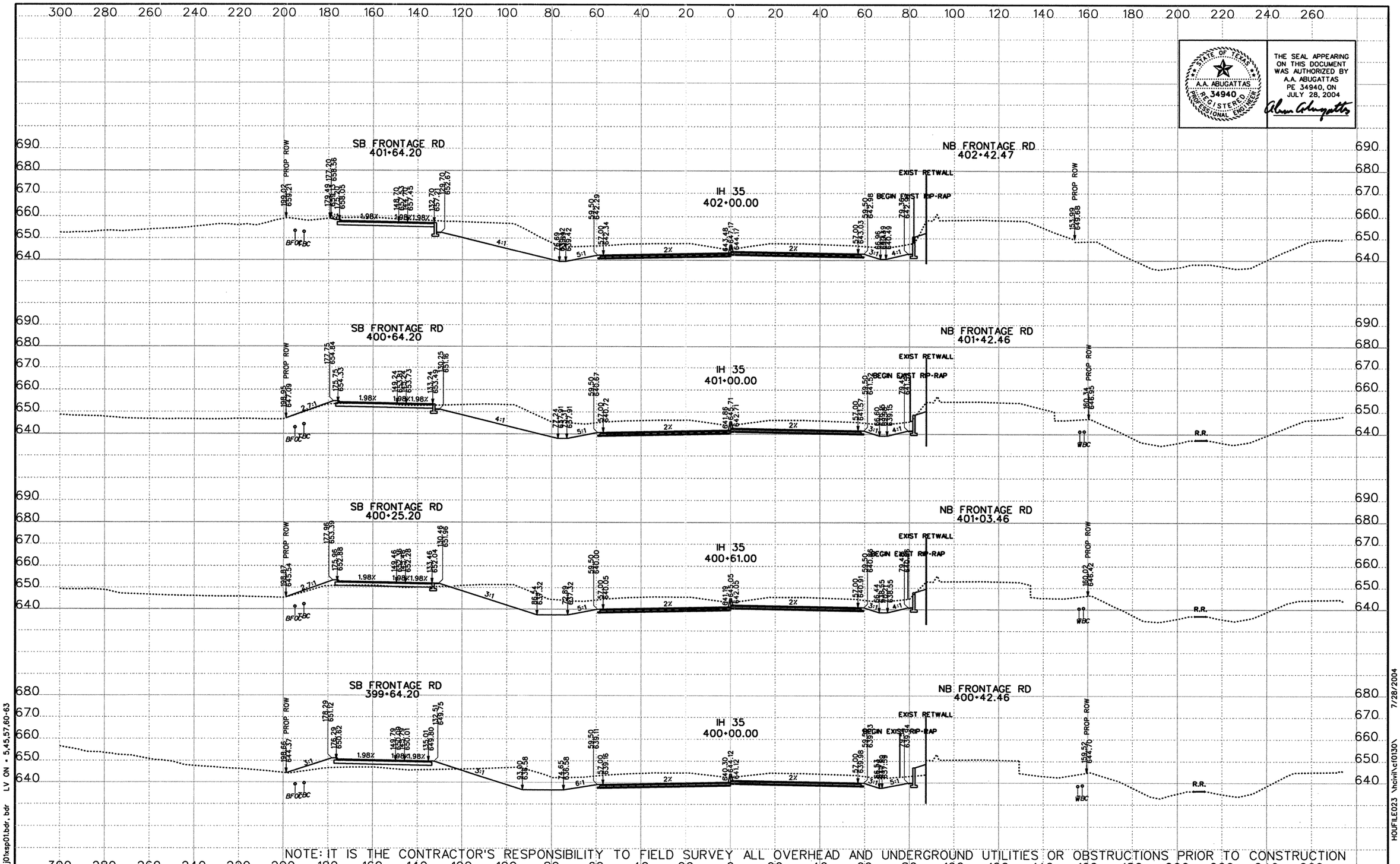

STATE OF TEXAS
A.A. ABUGATTAS
34940
REGISTERED PROFESSIONAL ENGINEER

THE SEAL APPEARING ON THIS DOCUMENT WAS AUTHORIZED BY A.A. ABUGATTAS PE 34940, ON JULY 28, 2004

NOTE: IT IS THE CONTRACTOR'S RESPONSIBILITY TO FIELD SURVEY ALL OVERHEAD AND UNDERGROUND UTILITIES OR OBSTRUCTIONS PRIOR TO CONSTRUCTION

DATE	BY	REV

©2003 Texas Department of Transportation

KBR
Engineered by KBR Technical Services, Inc

SCALE:
1" = 40' HORIZ
1" = 40' VERT
0 1/2 1"

IH 35
LOOP 20 TO UNIROYAL ROAD
PROPOSED CROSS SECTIONS

STATE PROJECT NO			FED RD DIV NO		COUNTY	SHEET 81 OF 104
NH-2002 (79)			6		WEBB	
STATE	DIST NO	CONT	SECT	JOB	HIGHWAY NO	SHEET NO
TEXAS	LAREDO	0018	05	062, ETC	IH 35	962

REF FILE(S): j0\xsp01.bdr, bdr LV ON = 5,45,57,60-63

7/28/2004 HOUFILE023 \hcivil\cf0130\ XS ROLL .dgn

THE SEAL APPEARING ON THIS DOCUMENT WAS AUTHORIZED BY A.A. ABUGATTAS PE 34940, ON JULY 28, 2004

STATE OF TEXAS — A.A. ABUGATTAS — 34940 — REGISTERED PROFESSIONAL ENGINEER

NOTE: IT IS THE CONTRACTOR'S RESPONSIBILITY TO FIELD SURVEY ALL OVERHEAD AND UNDERGROUND UTILITIES OR OBSTRUCTIONS PRIOR TO CONSTRUCTION

DATE	BY	REV

©2003 Texas Department of Transportation

KBR
Engineered by KBR Technical Services, Inc

SCALE:
1" = 40' HORIZ
1" = 40' VERT
0 1/2 1"

IH 35
LOOP 20 TO UNIROYAL ROAD
PROPOSED CROSS SECTIONS

STATE PROJECT NO			FED RD DIV NO		COUNTY	SHEET 82 OF 104
NH-2002 (79)			.6		WEBB	
STATE	DIST NO	CONT	SECT	JOB	HIGHWAY NO	SHEET NO
TEXAS	LAREDO	0018	05	062, ETC	IH 35	963

REF FILE(S): j01xsp01.bdr, bdr LV ON = 5,45,57,60-63

XS ROLL .dgn- HOUFILE023 \hcivil\c10130\ 7/28/2004

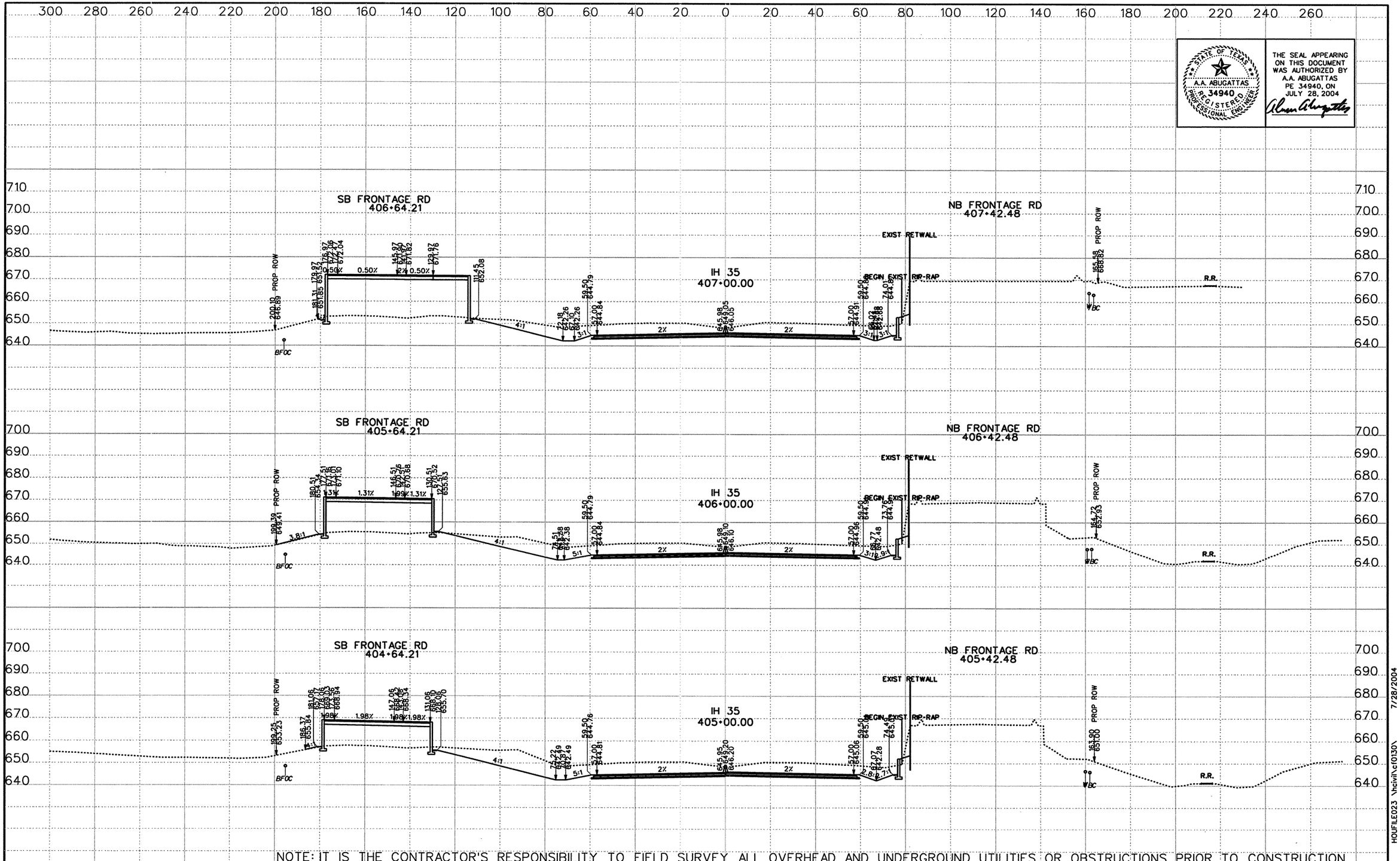

NOTE: IT IS THE CONTRACTOR'S RESPONSIBILITY TO FIELD SURVEY ALL OVERHEAD AND UNDERGROUND UTILITIES OR OBSTRUCTIONS PRIOR TO CONSTRUCTION

DATE	BY	REV

©2003 Texas Department of Transportation

KBR
Engineered by KBR Technical Services, Inc

SCALE:
1" = 40' HORIZ
1" = 40' VERT
0 1/2 1"

IH 35
LOOP 20 TO UNIROYAL ROAD
PROPOSED CROSS SECTIONS

STATE PROJECT NO			FED RD DIV NO		COUNTY	SHEET 83 OF 104
NH-2002 (79)			6		WEBB	
STATE	DIST NO	CONT	SECT	JOB	HIGHWAY NO	SHEET NO
TEXAS	LAREDO	0018	05	062, ETC	IH 35	964

REF FILE(S): j01xsp01.bdr, bdr LV ON = 5,45,57,60-63

HOUFILE023 \hcivil\cf0130\ 7/28/2004

XS ROLL .dgn

STATE OF TEXAS
A.A. ABUGATTAS
PE 34940
REGISTERED PROFESSIONAL ENGINEER

THE SEAL APPEARING ON THIS DOCUMENT WAS AUTHORIZED BY A.A. ABUGATTAS PE 34940, ON JULY 28, 2004

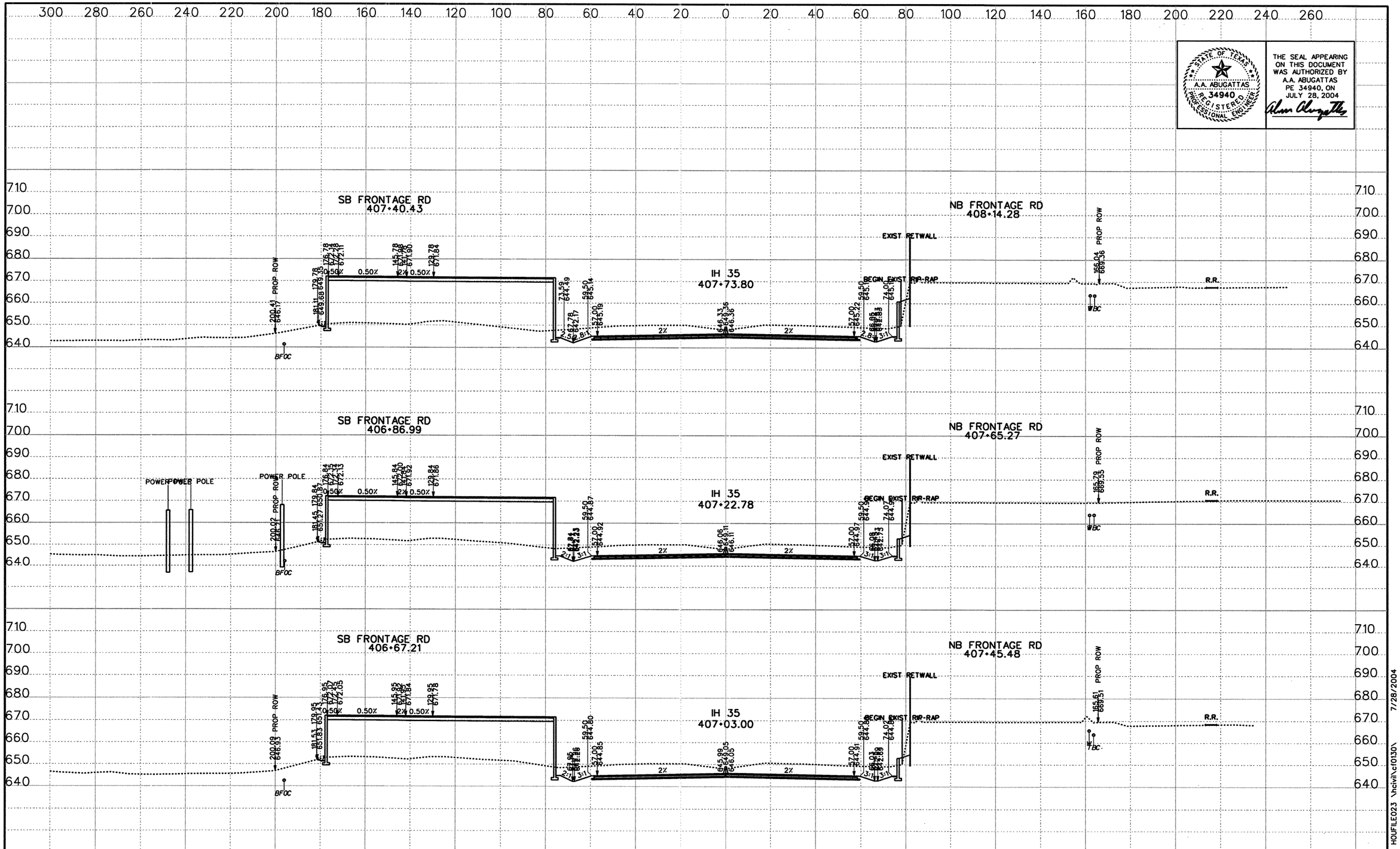

NOTE: IT IS THE CONTRACTOR'S RESPONSIBILITY TO FIELD SURVEY ALL OVERHEAD AND UNDERGROUND UTILITIES OR OBSTRUCTIONS PRIOR TO CONSTRUCTION

DATE	BY	REV

©2003 Texas Department of Transportation

KBR
Engineered by KBR Technical Services, Inc

SCALE:
1" = 40' HORIZ
1" = 40' VERT
0 1/2 1"

IH 35
LOOP 20 TO UNIROYAL ROAD
PROPOSED CROSS SECTIONS

STATE PROJECT NO			FED RD DIV NO		COUNTY	SHEET 84 OF 104
NH-2002 (79)			6		WEBB	
STATE	DIST NO	CONT	SECT	JOB	HIGHWAY NO	SHEET NO
TEXAS	LAREDO	0018	05	062, ETC	IH 35	965

REF FILE(S): j01xsp01.bdr, bdr LV ON = 5,45,57,60-63

HOUFILE023 \hcivil\cf0130\ 7/28/2004

XS ROLL .dgn

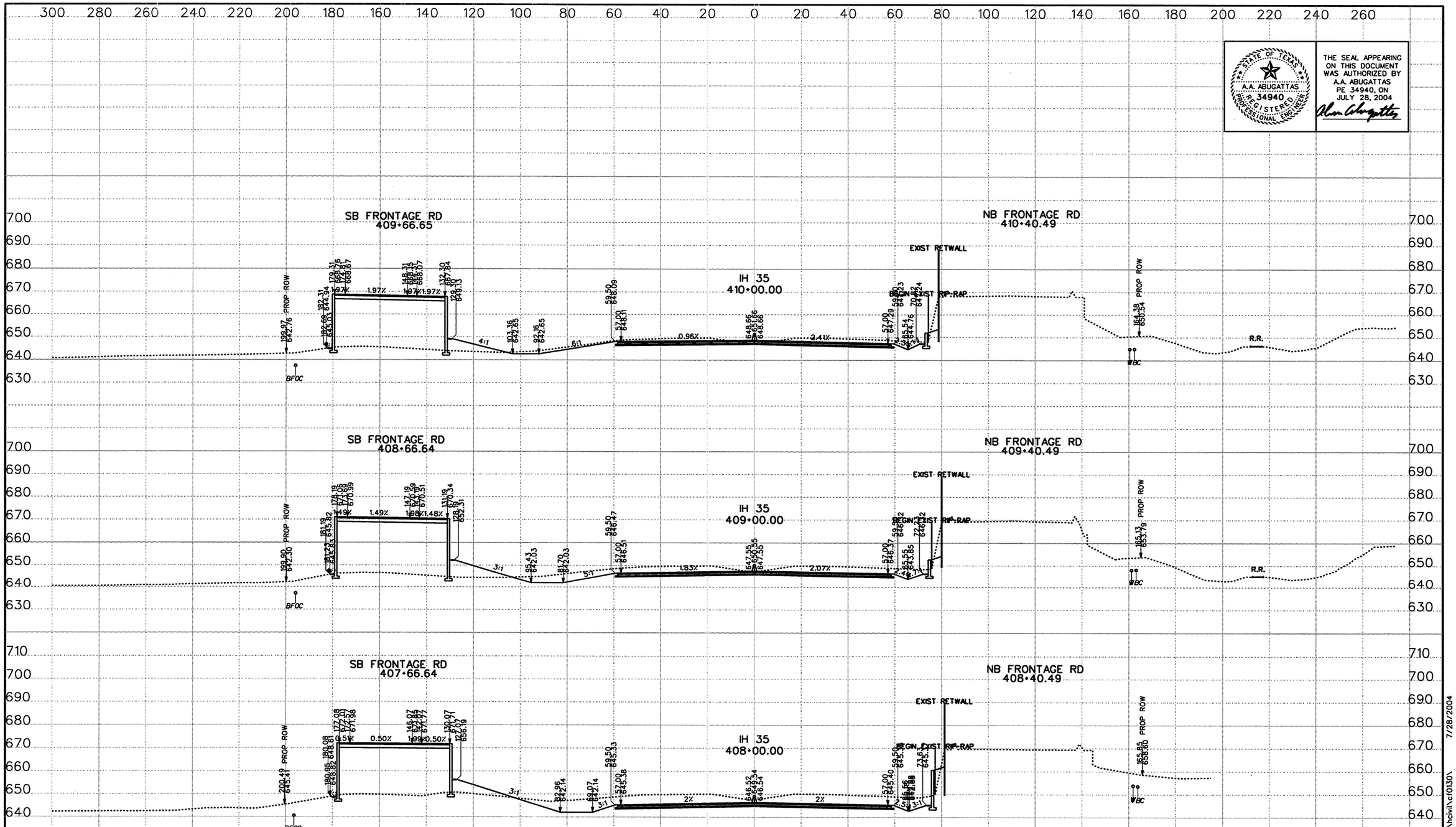

THE SEAL APPEARING ON THIS DOCUMENT WAS AUTHORIZED BY A.A. ABUGATTAS PE 34940, ON JULY 28, 2004

NOTE: IT IS THE CONTRACTOR'S RESPONSIBILITY TO FIELD SURVEY ALL OVERHEAD AND UNDERGROUND UTILITIES OR OBSTRUCTIONS PRIOR TO CONSTRUCTION

DATE	BY	REV

©2003 Texas Department of Transportation

KBR
Engineered by KBR Technical Services, Inc

SCALE:
1" = 40' HORIZ
1" = 40' VERT
0 1/2 1"

IH 35
LOOP 20 TO UNIROYAL ROAD
PROPOSED CROSS SECTIONS

STATE PROJECT NO			FED RD DIV NO		COUNTY	SHEET 85 OF 104
NH-2002 (79)			6		WEBB	
STATE	DIST NO	CONT	SECT	JOB	HIGHWAY NO	SHEET NO
TEXAS	LAREDO	0018	05	062, ETC	IH 35	966

REF FILE(S): j01xsp01.bdr, bdr LV ON = 5,45,57,60-63

HOUFILE023 \hcivil\cf0130\ 7/28/2004

XS ROLL .dgn

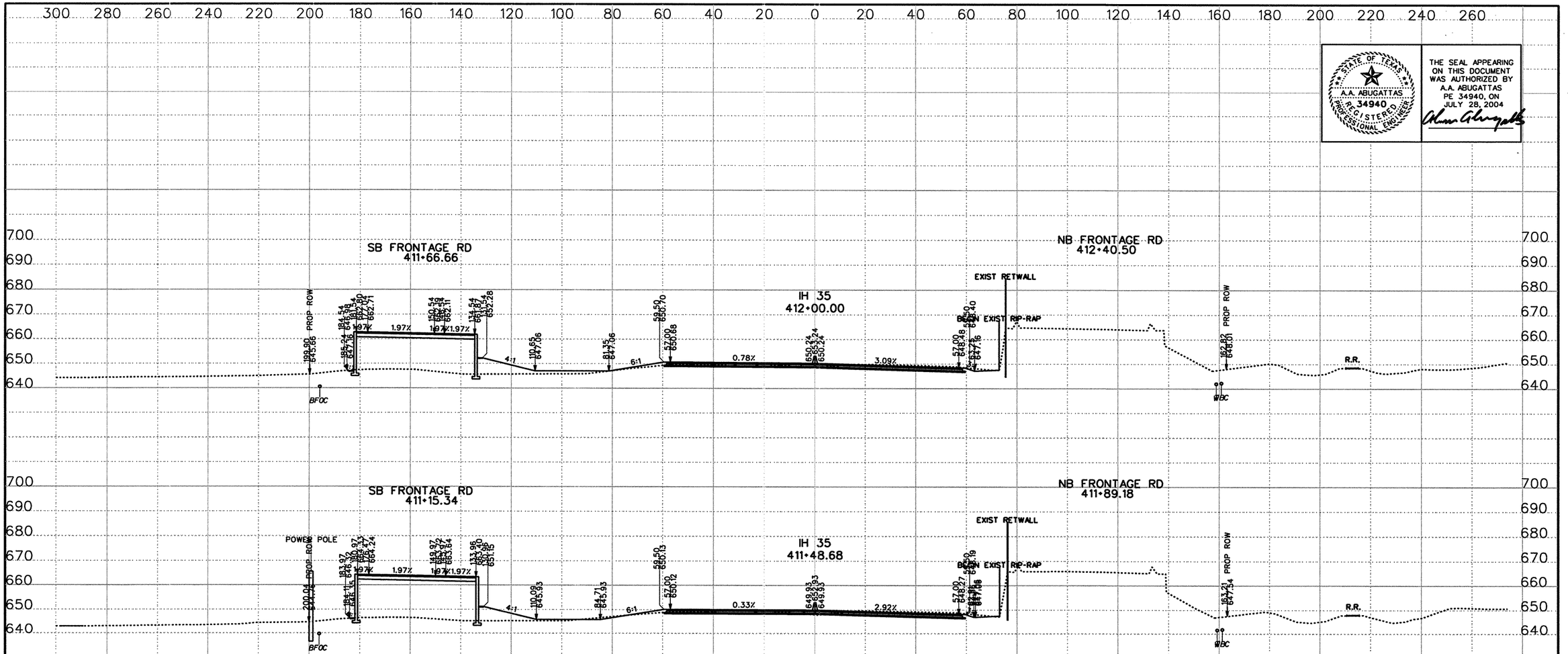

THE SEAL APPEARING ON THIS DOCUMENT WAS AUTHORIZED BY A.A. ABUGATTAS PE 34940, ON JULY 28, 2004

NOTE: IT IS THE CONTRACTOR'S RESPONSIBILITY TO FIELD SURVEY ALL OVERHEAD AND UNDERGROUND UTILITIES OR OBSTRUCTIONS PRIOR TO CONSTRUCTION

DATE	BY	REV

©2003 Texas Department of Transportation

KBR
Engineered by KBR Technical Services, Inc

SCALE:
1" = 40' HORIZ
1" = 40' VERT
0 1/2 1"

IH 35
LOOP 20 TO UNIROYAL ROAD
PROPOSED CROSS SECTIONS

STATE PROJECT NO			FED RD DIV NO		COUNTY	SHEET 86 OF 104
NH-2002 (79)			6		WEBB	
STATE	DIST NO	CONT	SECT	JOB	HIGHWAY NO	SHEET NO
TEXAS	LAREDO	0018	05	062, ETC	IH 35	967

REF FILE(S): j01xsp01.bdr, bdr LV ON = 5,45,57,60-63

HOUFILE023 \hcivil\cf0130\ 7/28/2004

XS ROLL .dgn

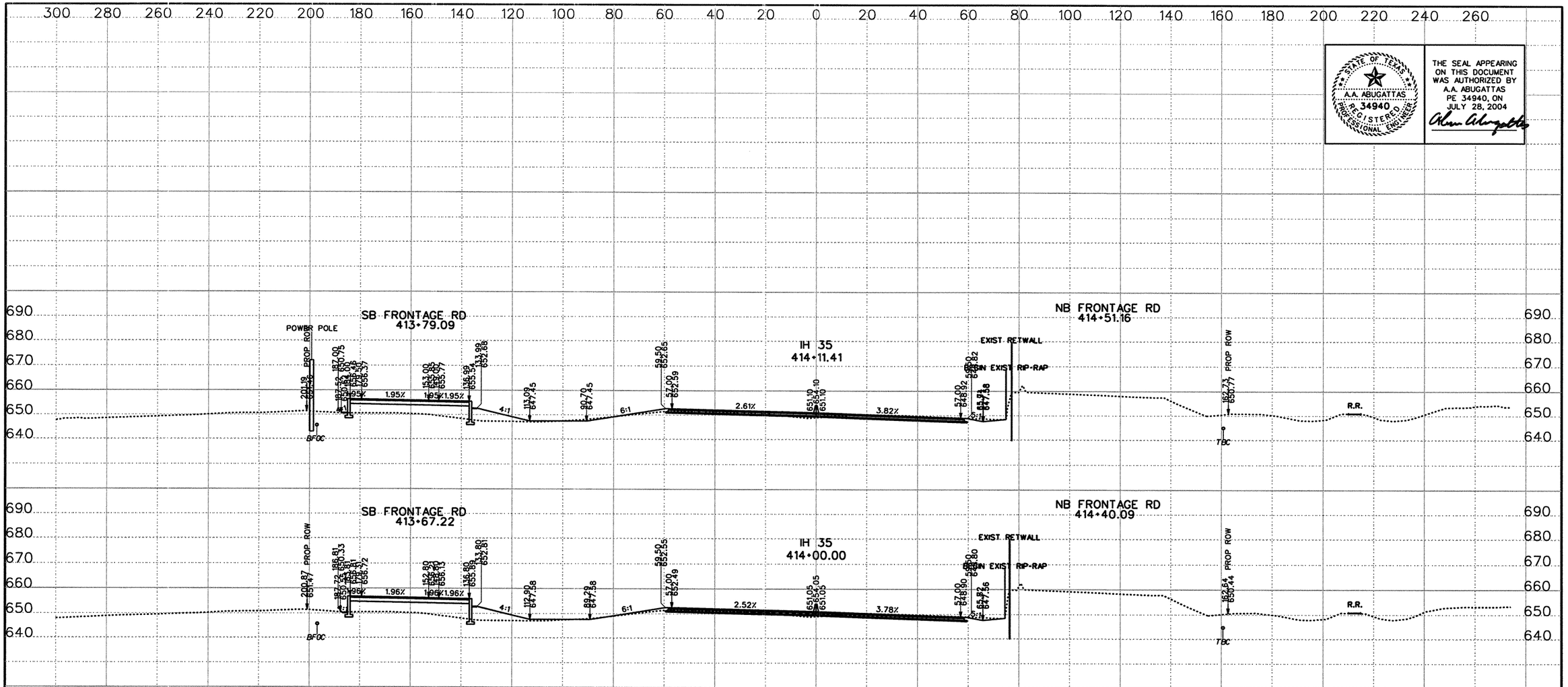

THE SEAL APPEARING ON THIS DOCUMENT WAS AUTHORIZED BY A.A. ABUGATTAS PE 34940, ON JULY 28, 2004

STATE OF TEXAS — A.A. ABUGATTAS — 34940 — REGISTERED PROFESSIONAL ENGINEER

NOTE: IT IS THE CONTRACTOR'S RESPONSIBILITY TO FIELD SURVEY ALL OVERHEAD AND UNDERGROUND UTILITIES OR OBSTRUCTIONS PRIOR TO CONSTRUCTION

DATE	BY	REV

©2003 Texas Department of Transportation

KBR
Engineered by KBR Technical Services, Inc

SCALE:
1" = 40' HORIZ
1" = 40' VERT
0 ½ 1"

IH 35
LOOP 20 TO UNIROYAL ROAD
PROPOSED CROSS SECTIONS

STATE PROJECT NO			FED RD DIV NO		COUNTY	SHEET 87 OF 104
NH-2002 (79)			6		WEBB	
STATE	DIST NO	CONT	SECT	JOB	HIGHWAY NO	SHEET NO
TEXAS	LAREDO	0018	05	062, ETC	IH 35	968

REF FILE(S): j01xsp01.bdr, bdr LV ON = 5,45,57,60-63

HOUFILE023 \hcivil\c10130\ 7/28/2004

XS ROLL .dgn-

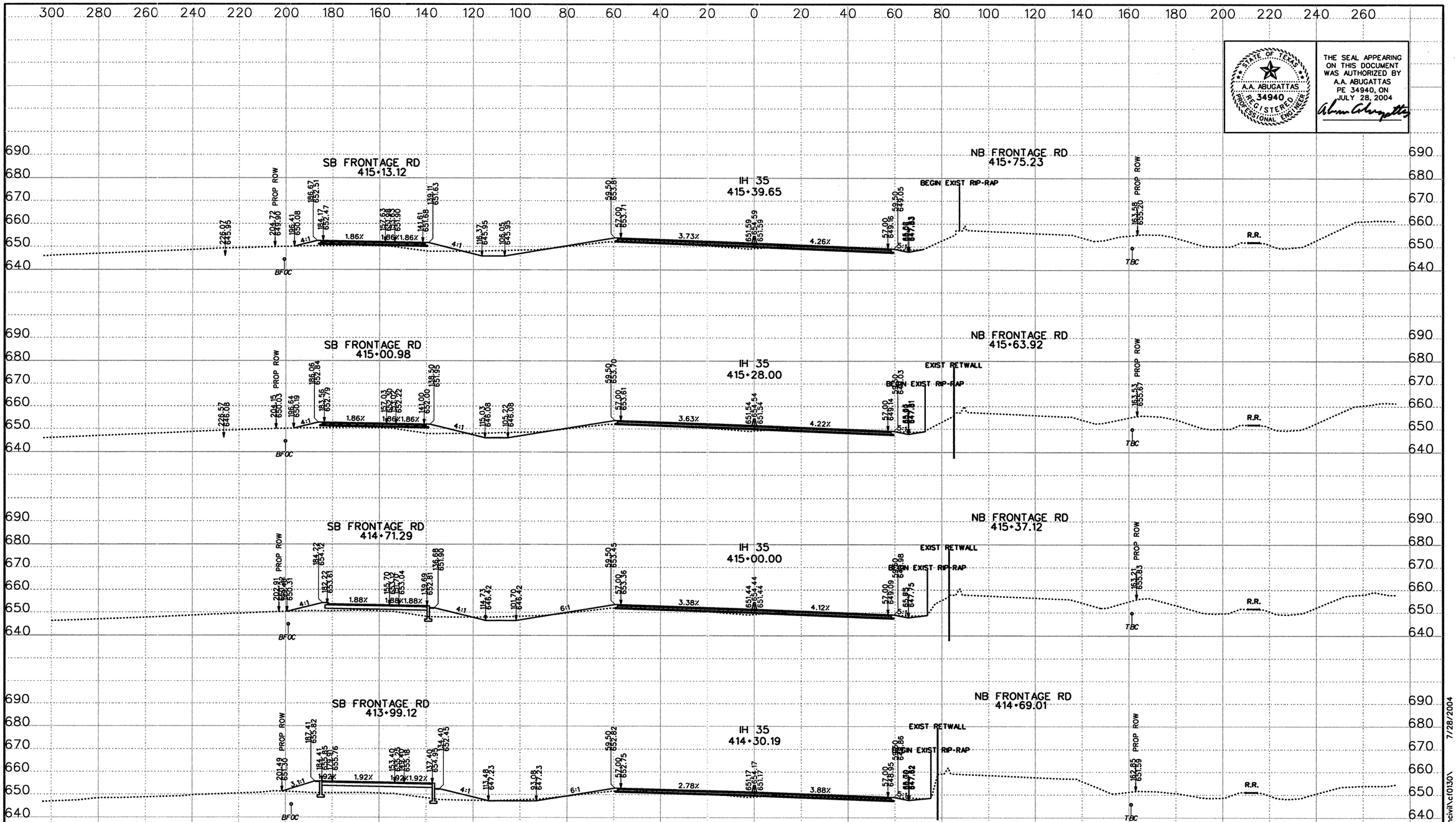

THE SEAL APPEARING ON THIS DOCUMENT WAS AUTHORIZED BY A.A. ABUGATTAS PE 34940, ON JULY 28, 2004

NOTE: IT IS THE CONTRACTOR'S RESPONSIBILITY TO FIELD SURVEY ALL OVERHEAD AND UNDERGROUND UTILITIES OR OBSTRUCTIONS PRIOR TO CONSTRUCTION

DATE	BY	REV

©2003 Texas Department of Transportation

KBR
Engineered by KBR Technical Services, Inc

SCALE:
1" = 40' HORIZ
1" = 40' VERT
0 1/2 1"

IH 35
LOOP 20 TO UNIROYAL ROAD
PROPOSED CROSS SECTIONS

STATE PROJECT NO			FED RD DIV NO		COUNTY	SHEET 88 OF 104
NH-2002 (79)			6		WEBB	
STATE	DIST NO	CONT	SECT	JOB	HIGHWAY NO	SHEET NO
TEXAS	LAREDO	0018	05	062, ETC	IH 35	969

REF FILE(S): j01xsp01.bdr, bdr LV ON = 5,45,57,60-63

HOUFILE023 \hcivil\cf0130\ 7/28/2004

XS ROLL .dgn-

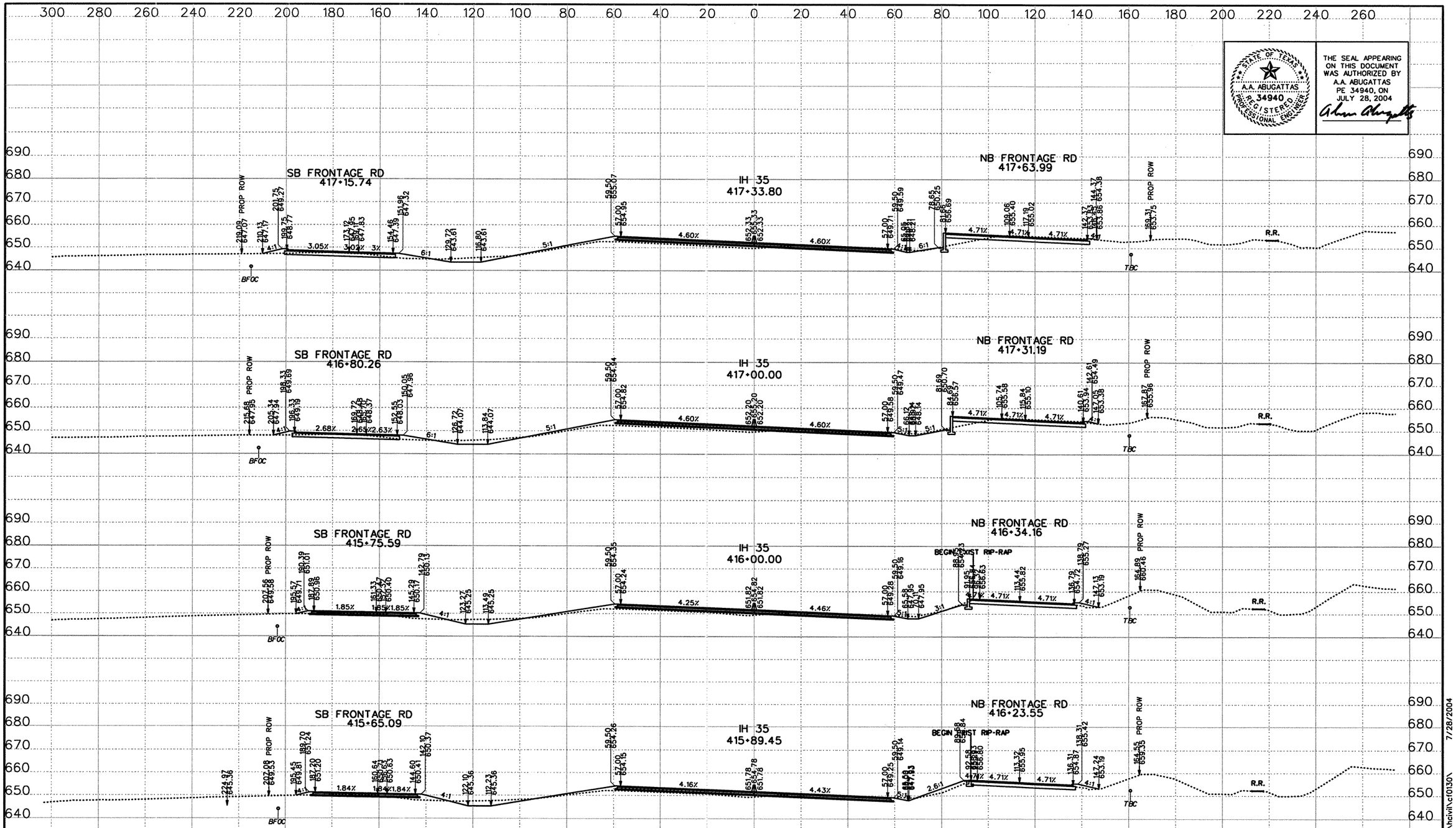

STATE OF TEXAS
A.A. ABUGATTAS
PE 34940
REGISTERED PROFESSIONAL ENGINEER

THE SEAL APPEARING ON THIS DOCUMENT WAS AUTHORIZED BY A.A. ABUGATTAS PE 34940, ON JULY 28, 2004

NOTE: IT IS THE CONTRACTOR'S RESPONSIBILITY TO FIELD SURVEY ALL OVERHEAD AND UNDERGROUND UTILITIES OR OBSTRUCTIONS PRIOR TO CONSTRUCTION

DATE	BY	REV

©2003 Texas Department of Transportation

KBR
Engineered by KBR Technical Services, Inc

SCALE:
1" = 40' HORIZ
1" = 40' VERT
0 1/2 1"

IH 35
LOOP 20 TO UNIROYAL ROAD
PROPOSED CROSS SECTIONS

STATE PROJECT NO			FED RD DIV NO		COUNTY	SHEET 89 OF 104
NH-2002 (79)			6		WEBB	
STATE	DIST NO	CONT	SECT	JOB	HIGHWAY NO	SHEET NO
TEXAS	LAREDO	0018	05	062, ETC	IH 35	970

REF FILE(S): j01xsp01.bdr, bdr LV ON = 5,45,57,60-63

XS ROLL .dgn- HOUFILE023 \hcivil\cf0130\ 7/28/2004

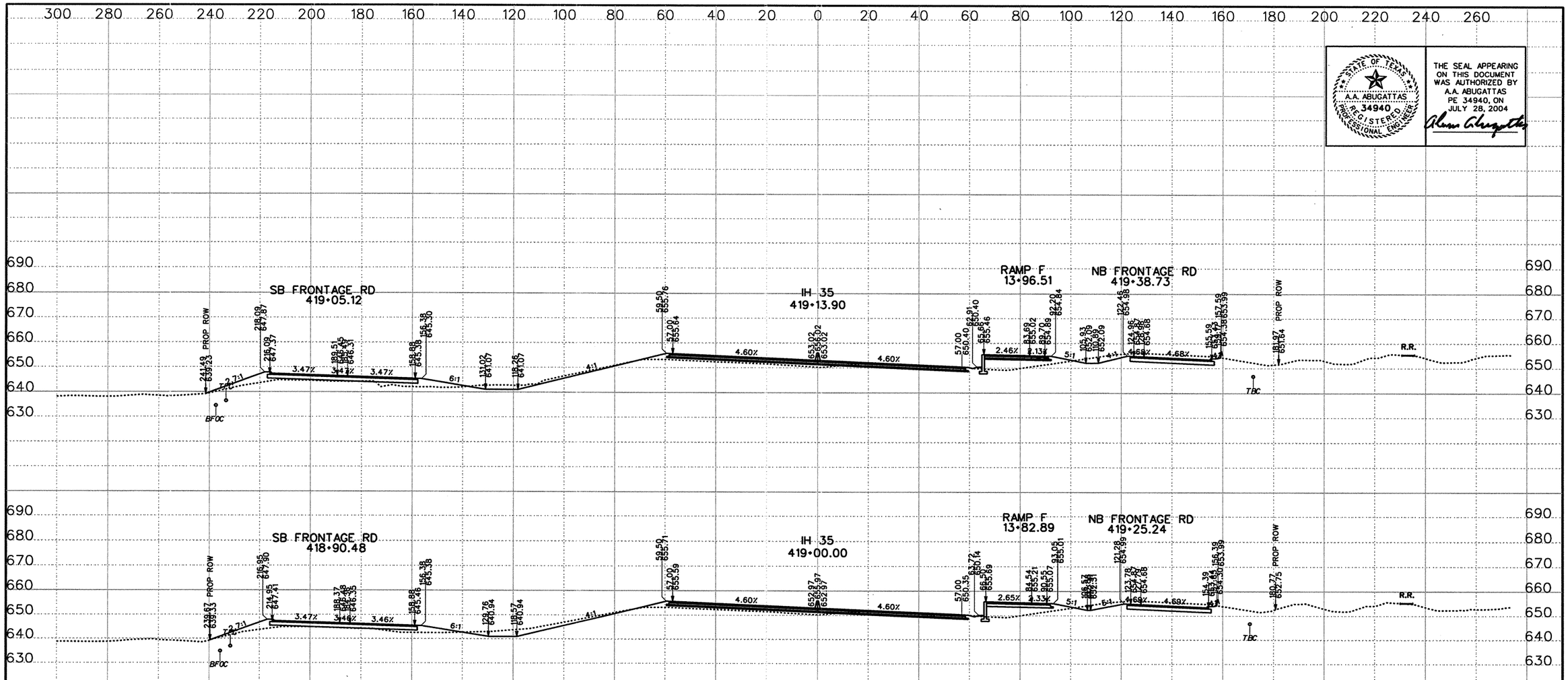

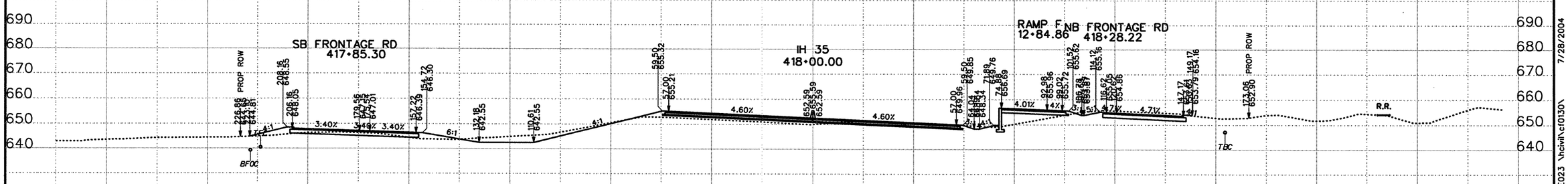

STATE OF TEXAS
A.A. ABUGATTAS
34940
REGISTERED PROFESSIONAL ENGINEER

THE SEAL APPEARING ON THIS DOCUMENT WAS AUTHORIZED BY A.A. ABUGATTAS PE 34940, ON JULY 28, 2004

NOTE: IT IS THE CONTRACTOR'S RESPONSIBILITY TO FIELD SURVEY ALL OVERHEAD AND UNDERGROUND UTILITIES OR OBSTRUCTIONS PRIOR TO CONSTRUCTION

DATE	BY	REV

©2003 Texas Department of Transportation

KBR
Engineered by KBR Technical Services, Inc

SCALE:
1" = 40' HORIZ
1" = 40' VERT
0 1/2 1"

IH 35
LOOP 20 TO UNIROYAL ROAD
PROPOSED CROSS SECTIONS

STATE PROJECT NO			FED RD DIV NO		COUNTY	SHEET 90 OF 104
NH-2002 (79)			6		WEBB	
STATE	DIST NO	CONT	SECT	JOB	HIGHWAY NO	SHEET NO
TEXAS	LAREDO	0018	05	062, ETC	IH 35	971

REF FILE(S): j01xsp01.bdr, bdr LV ON = 5,45,57,60-63

HOUFILE023 \hcivil\cf0130\ 7/28/2004

XS ROLL .dgn

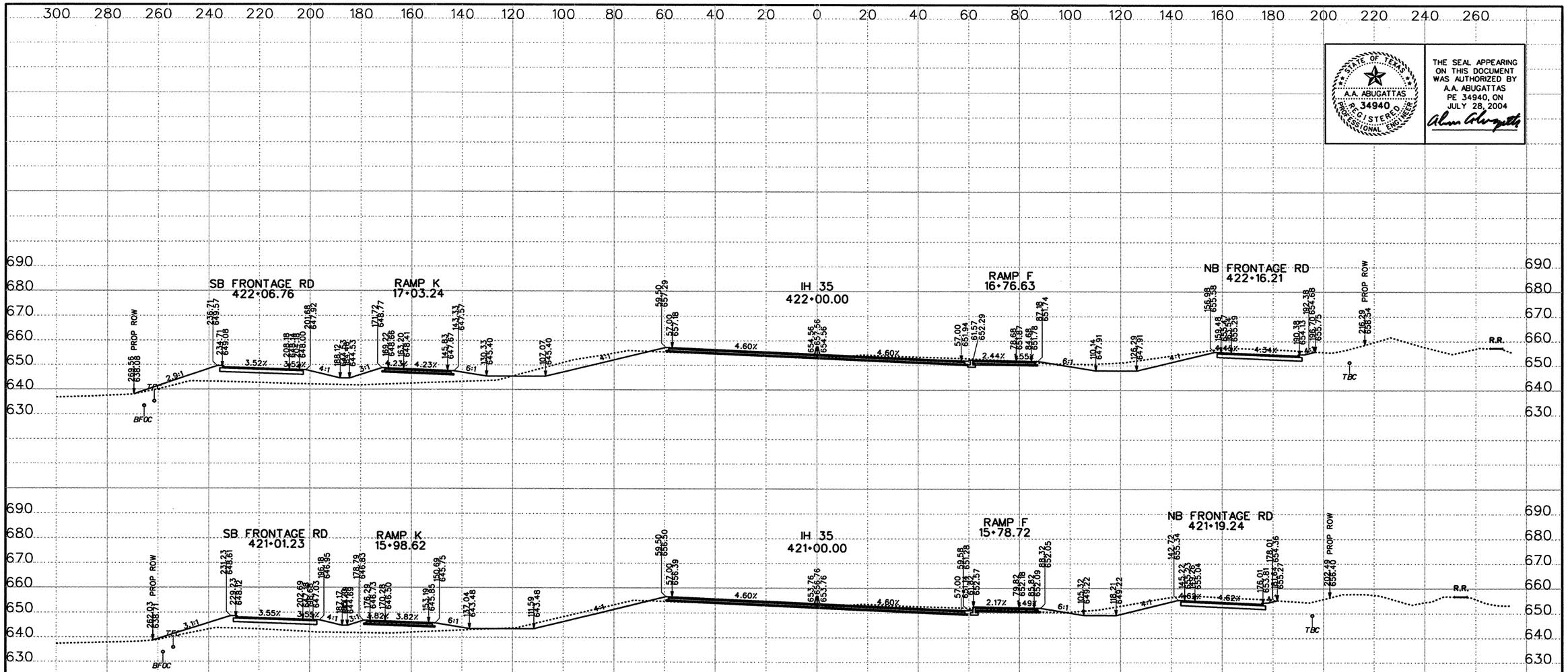

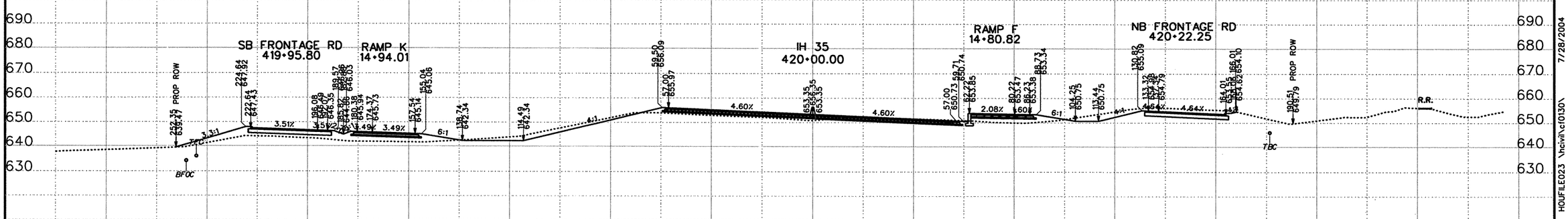

NOTE: IT IS THE CONTRACTOR'S RESPONSIBILITY TO FIELD SURVEY ALL OVERHEAD AND UNDERGROUND UTILITIES OR OBSTRUCTIONS PRIOR TO CONSTRUCTION

STATE OF TEXAS
A.A. ABUGATTAS
No. 34940
REGISTERED PROFESSIONAL ENGINEER

THE SEAL APPEARING ON THIS DOCUMENT WAS AUTHORIZED BY A.A. ABUGATTAS PE 34940, ON JULY 28, 2004

DATE	BY	REV

©2003 Texas Department of Transportation

KBR
Engineered by KBR Technical Services, Inc

SCALE:
1" = 40' HORIZ
1" = 40' VERT
0 1/2 1"

IH 35
LOOP 20 TO UNIROYAL ROAD
PROPOSED CROSS SECTIONS

STATE PROJECT NO			FED RD DIV NO		COUNTY	SHEET 91 OF 104
NH-2002 (79)			6		WEBB	
STATE	DIST NO	CONT	SECT	JOB	HIGHWAY NO	SHEET NO
TEXAS	LAREDO	0018	05	062, ETC	IH 35	972

REF FILE(S): j01xsp01.bdr, bdr LV ON = 5,45,57,60-63

HOUFILE023 \hcivil\cf0130\ 7/28/2004

XS ROLL .dgn-

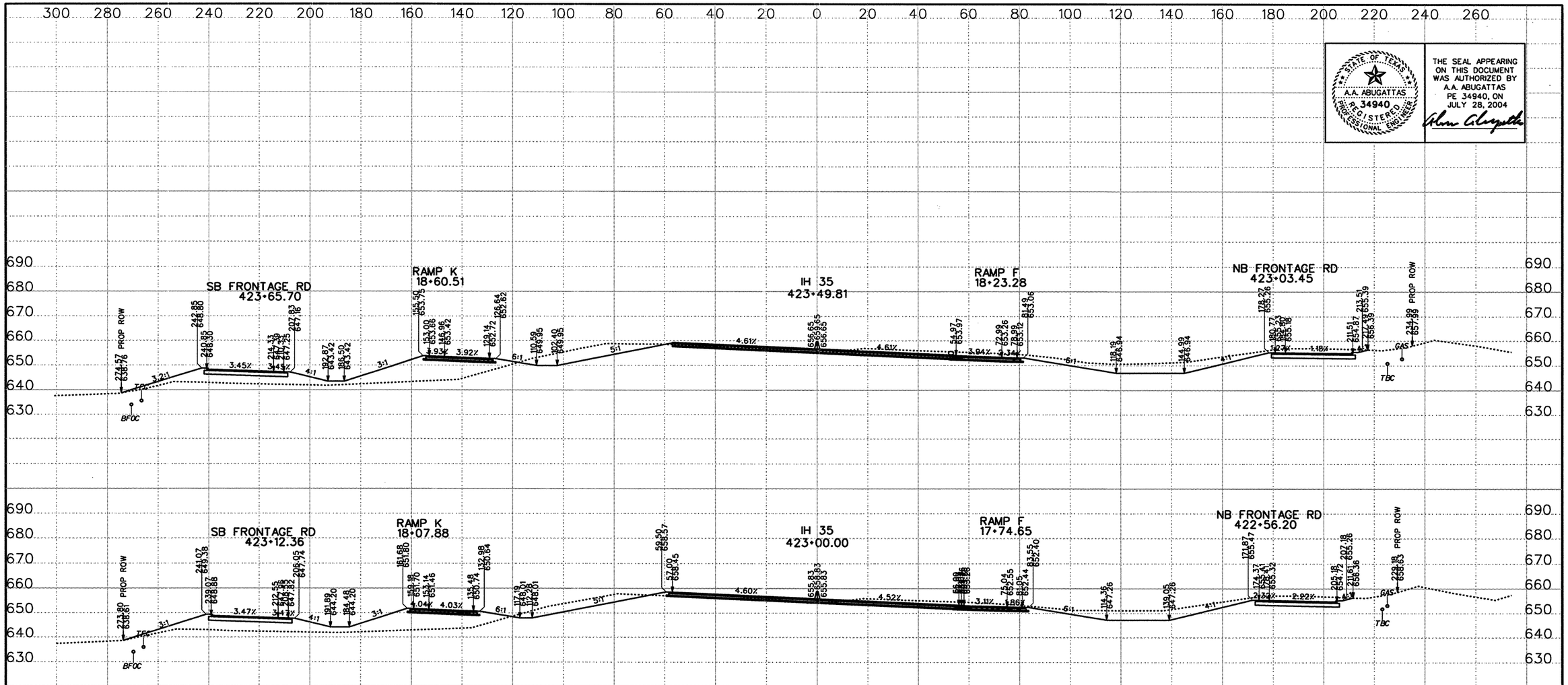

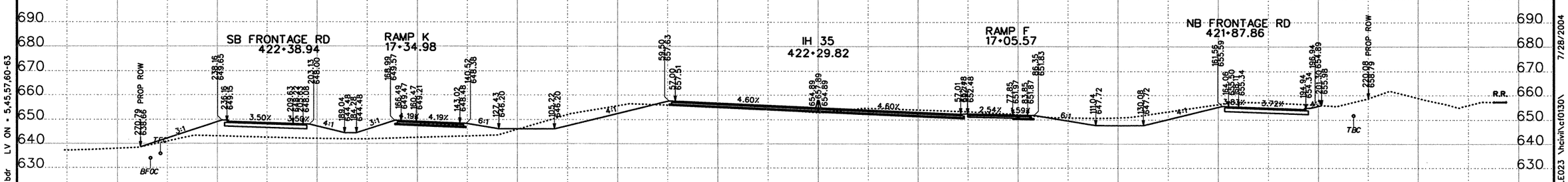

STATE OF TEXAS
A.A. ABUGATTAS
34940
REGISTERED PROFESSIONAL ENGINEER

THE SEAL APPEARING ON THIS DOCUMENT WAS AUTHORIZED BY A.A. ABUGATTAS PE 34940, ON JULY 28, 2004

NOTE: IT IS THE CONTRACTOR'S RESPONSIBILITY TO FIELD SURVEY ALL OVERHEAD AND UNDERGROUND UTILITIES OR OBSTRUCTIONS PRIOR TO CONSTRUCTION

DATE	BY	REV

©2003 Texas Department of Transportation

KBR
Engineered by KBR Technical Services, Inc

SCALE:
1" = 40' HORIZ
1" = 40' VERT
0 1/2 1"

IH 35
LOOP 20 TO UNIROYAL ROAD
PROPOSED CROSS SECTIONS

STATE PROJECT NO			FED RD DIV NO		COUNTY	SHEET 92 OF 104
NH-2002 (79)			6		WEBB	
STATE	DIST NO	CONT	SECT	JOB	HIGHWAY NO	SHEET NO
TEXAS	LAREDO	0018	05	062, ETC	IH 35	973

REF FILE(S): j01xsp01.bdr, bdr LV ON = 5,45,57,60-63

HOUFILE023 \hcivil\cf0130\ 7/28/2004

XS ROLL .dgn-

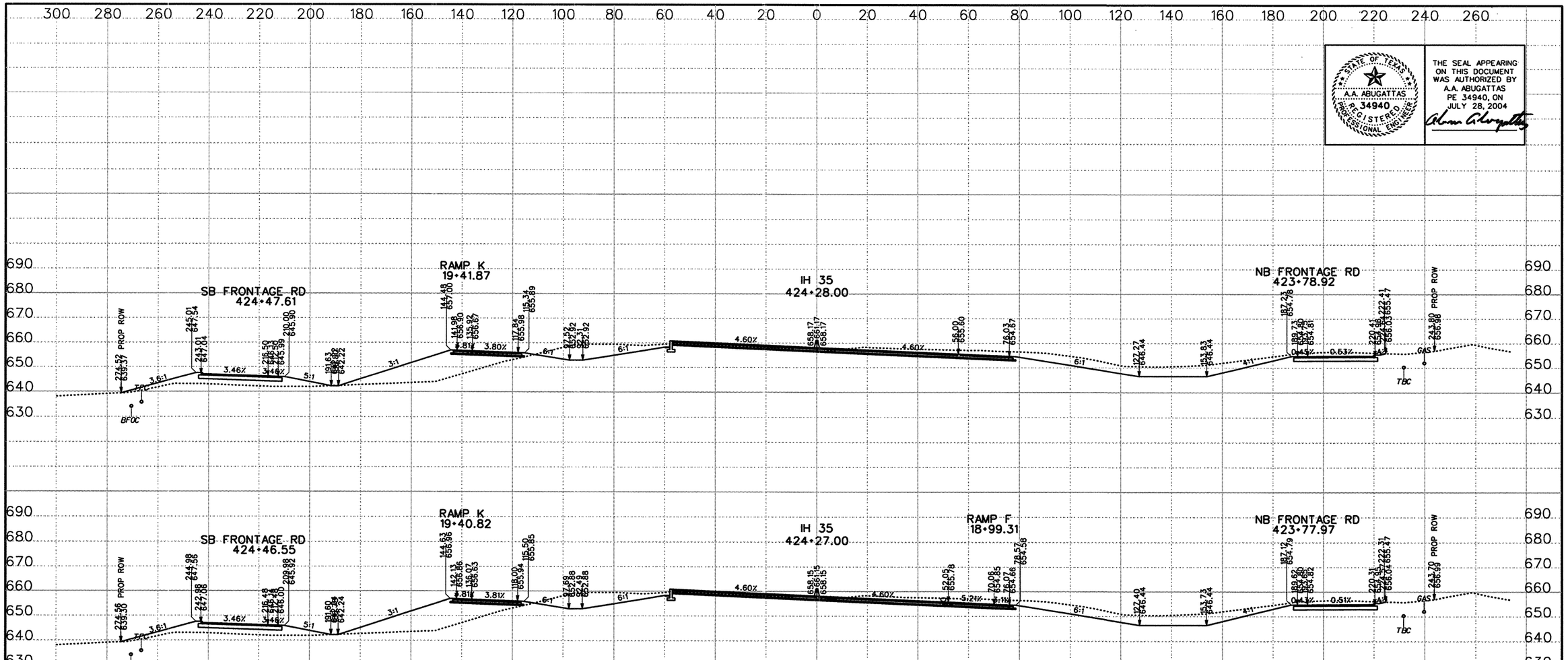

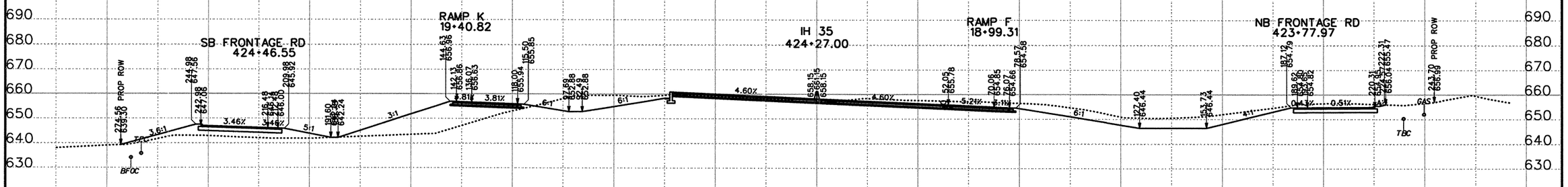

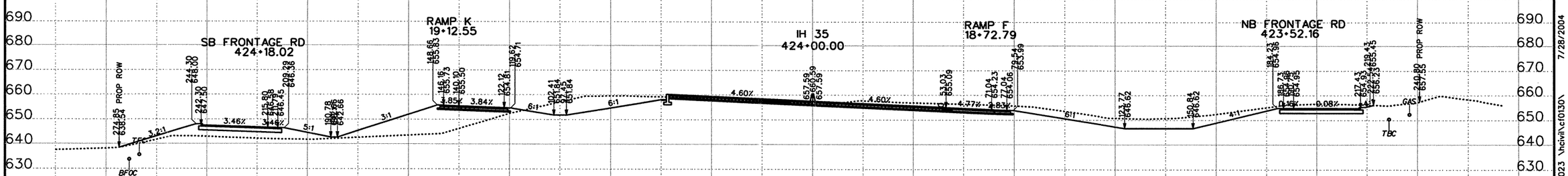

STATE OF TEXAS
A.A. ABUGATTAS
PE 34940
REGISTERED PROFESSIONAL ENGINEER

THE SEAL APPEARING ON THIS DOCUMENT WAS AUTHORIZED BY A.A. ABUGATTAS PE 34940, ON JULY 28, 2004

NOTE: IT IS THE CONTRACTOR'S RESPONSIBILITY TO FIELD SURVEY ALL OVERHEAD AND UNDERGROUND UTILITIES OR OBSTRUCTIONS PRIOR TO CONSTRUCTION

DATE	BY	REV

©2003 Texas Department of Transportation

KBR
Engineered by KBR Technical Services, Inc

SCALE:
1" = 40' HORIZ
1" = 40' VERT
0 1/2 1"

IH 35
LOOP 20 TO UNIROYAL ROAD
PROPOSED CROSS SECTIONS

STATE PROJECT NO			FED RD DIV NO		COUNTY	SHEET 93 OF 104
NH-2002 (79)			6		WEBB	
STATE	DIST NO	CONT	SECT	JOB	HIGHWAY NO	SHEET NO
TEXAS	LAREDO	0018	05	062, ETC	IH 35	974

REF FILE(S): j01xsp01.bdr, bdr LV ON = 5,45,57,60-63

HOUFILE023 \hcivil\cf0130\ 7/28/2004

XS ROLL .dgn-

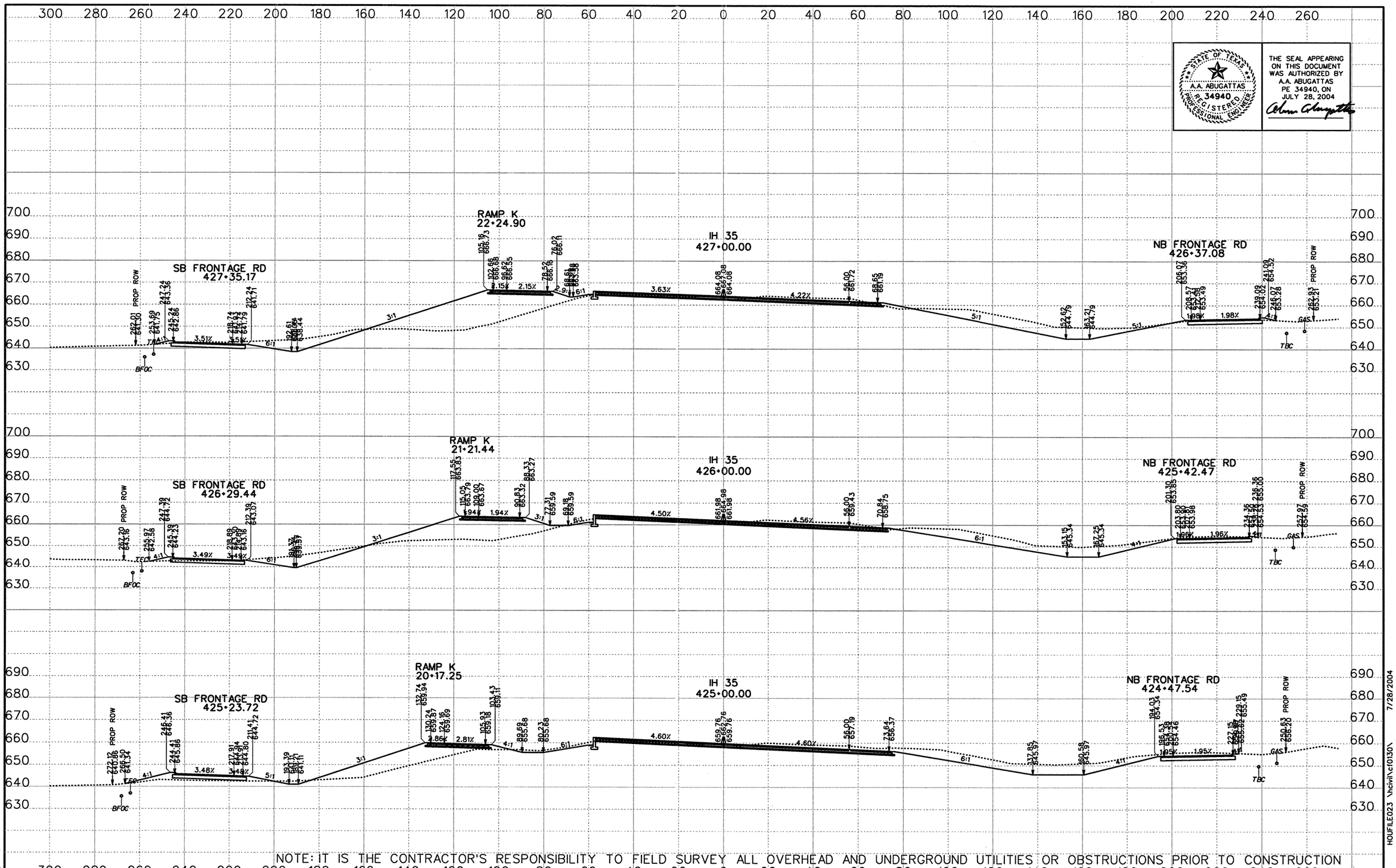

THE SEAL APPEARING ON THIS DOCUMENT WAS AUTHORIZED BY A.A. ABUGATTAS PE 34940, ON JULY 28, 2004

NOTE: IT IS THE CONTRACTOR'S RESPONSIBILITY TO FIELD SURVEY ALL OVERHEAD AND UNDERGROUND UTILITIES OR OBSTRUCTIONS PRIOR TO CONSTRUCTION

DATE	BY	REV

©2003 Texas Department of Transportation

KBR
Engineered by KBR Technical Services, Inc

SCALE:
1" = 40' HORIZ
1" = 40' VERT
0 ½ 1"

IH 35
LOOP 20 TO UNIROYAL ROAD
PROPOSED CROSS SECTIONS

STATE PROJECT NO			FED RD DIV NO		COUNTY	SHEET 94 OF 104
NH-2002 (79)			6		WEBB	
STATE	DIST NO	CONT	SECT	JOB	HIGHWAY NO	SHEET NO
TEXAS	LAREDO	0018	05	062, ETC	IH 35	975

REF FILE(S): j01xsp01.bdr, bdr LV ON = 5,45,57,60-63

HOUFILE023 \hcivil\c10130\ 7/28/2004

XS ROLL .dgn-

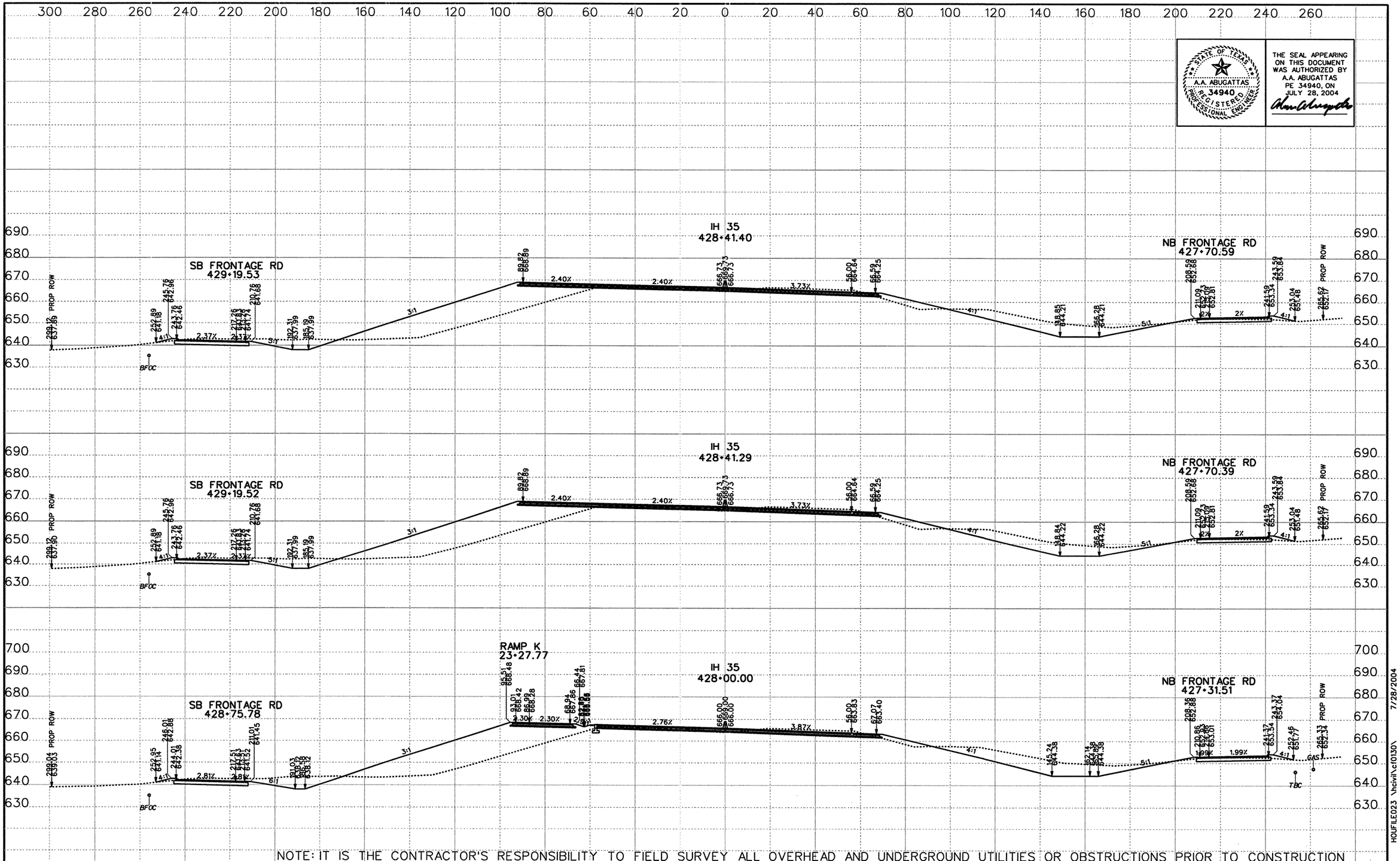

STATE OF TEXAS
A.A. ABUGATTAS
34940
REGISTERED PROFESSIONAL ENGINEER

THE SEAL APPEARING ON THIS DOCUMENT WAS AUTHORIZED BY A.A. ABUGATTAS PE 34940, ON JULY 28, 2004

NOTE: IT IS THE CONTRACTOR'S RESPONSIBILITY TO FIELD SURVEY ALL OVERHEAD AND UNDERGROUND UTILITIES OR OBSTRUCTIONS PRIOR TO CONSTRUCTION

DATE	BY	REV

©2003 Texas Department of Transportation

KBR
Engineered by KBR Technical Services, Inc

SCALE:
1" = 40' HORIZ
1" = 40' VERT
0 ½ 1"

IH 35
LOOP 20 TO UNIROYAL ROAD
PROPOSED CROSS SECTIONS

STATE PROJECT NO			FED RD DIV NO		COUNTY	SHEET 95 OF 104
NH-2002 (79)			6		WEBB	
STATE	DIST NO	CONT	SECT	JOB	HIGHWAY NO	SHEET NO
TEXAS	LAREDO	0018	05	062, ETC	IH 35	976

REF FILE(S): j01xsp01.bdr, bdr LV ON = 5,45,57,60-63

HOUFILE023 \hcivil\cf0130\ 7/28/2004

XS ROLL .dgn

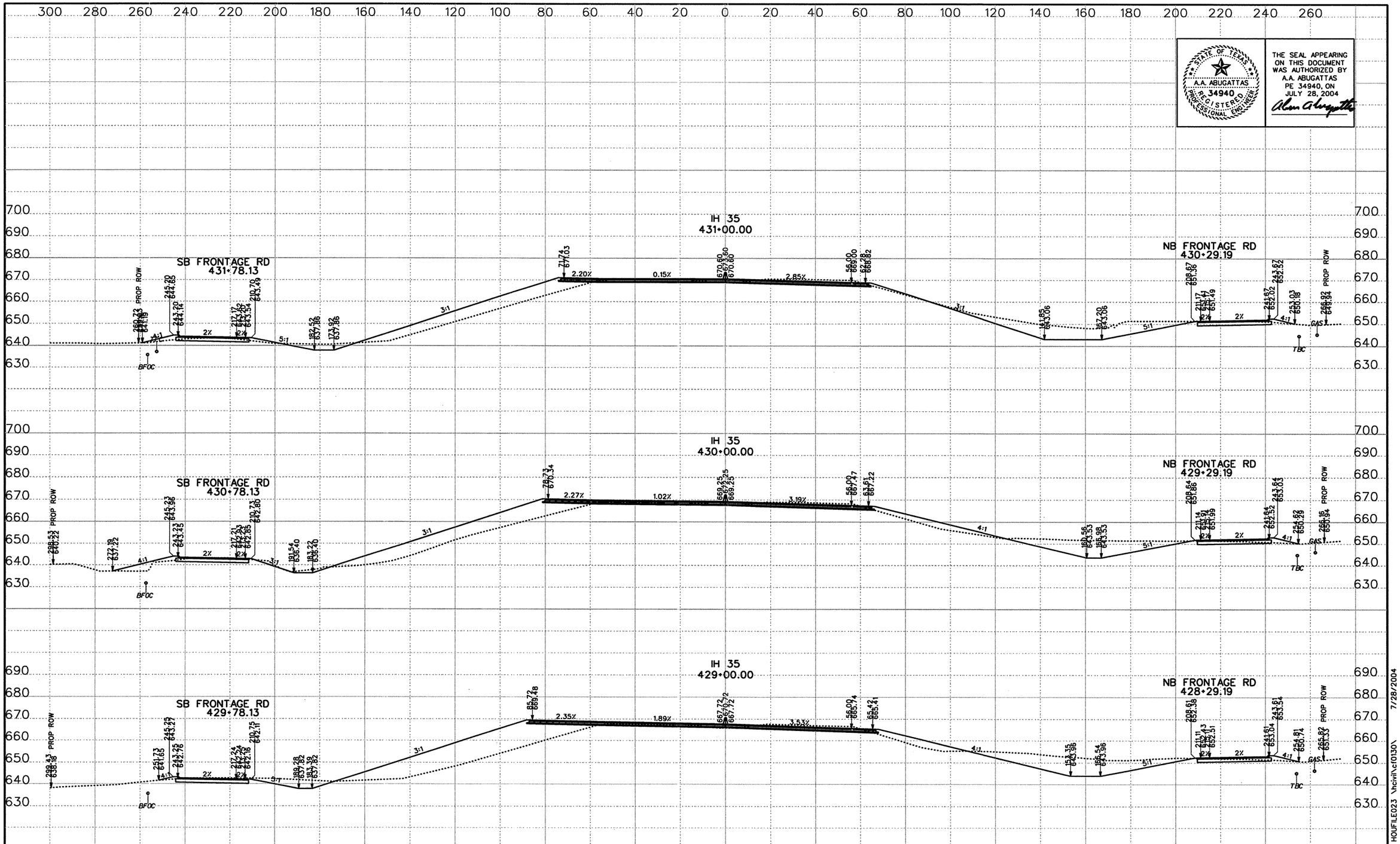

STATE OF TEXAS
A.A. ABUGATTAS
34940
REGISTERED
PROFESSIONAL ENGINEER

THE SEAL APPEARING ON THIS DOCUMENT WAS AUTHORIZED BY A.A. ABUGATTAS PE 34940, ON JULY 28, 2004

NOTE: IT IS THE CONTRACTOR'S RESPONSIBILITY TO FIELD SURVEY ALL OVERHEAD AND UNDERGROUND UTILITIES OR OBSTRUCTIONS PRIOR TO CONSTRUCTION

DATE	BY	REV

©2003 Texas Department of Transportation

KBR
Engineered by KBR Technical Services, Inc

SCALE:
1" = 40' HORIZ
1" = 40' VERT
0 1/2 1"

IH 35
LOOP 20 TO UNIROYAL ROAD
PROPOSED CROSS SECTIONS

STATE PROJECT NO			FED RD DIV NO		COUNTY	SHEET 96 OF 104
NH-2002 (79)			6		WEBB	
STATE	DIST NO	CONT	SECT	JOB	HIGHWAY NO	SHEET NO
TEXAS	LAREDO	0018	05	062, ETC	IH 35	977

REF FILE(S): j01xsp01.bdr, bdr LV ON = 5,45,57,60-63

HOUFILE023 \hcivil\c10130\ 7/28/2004

XS ROLL .dgn-

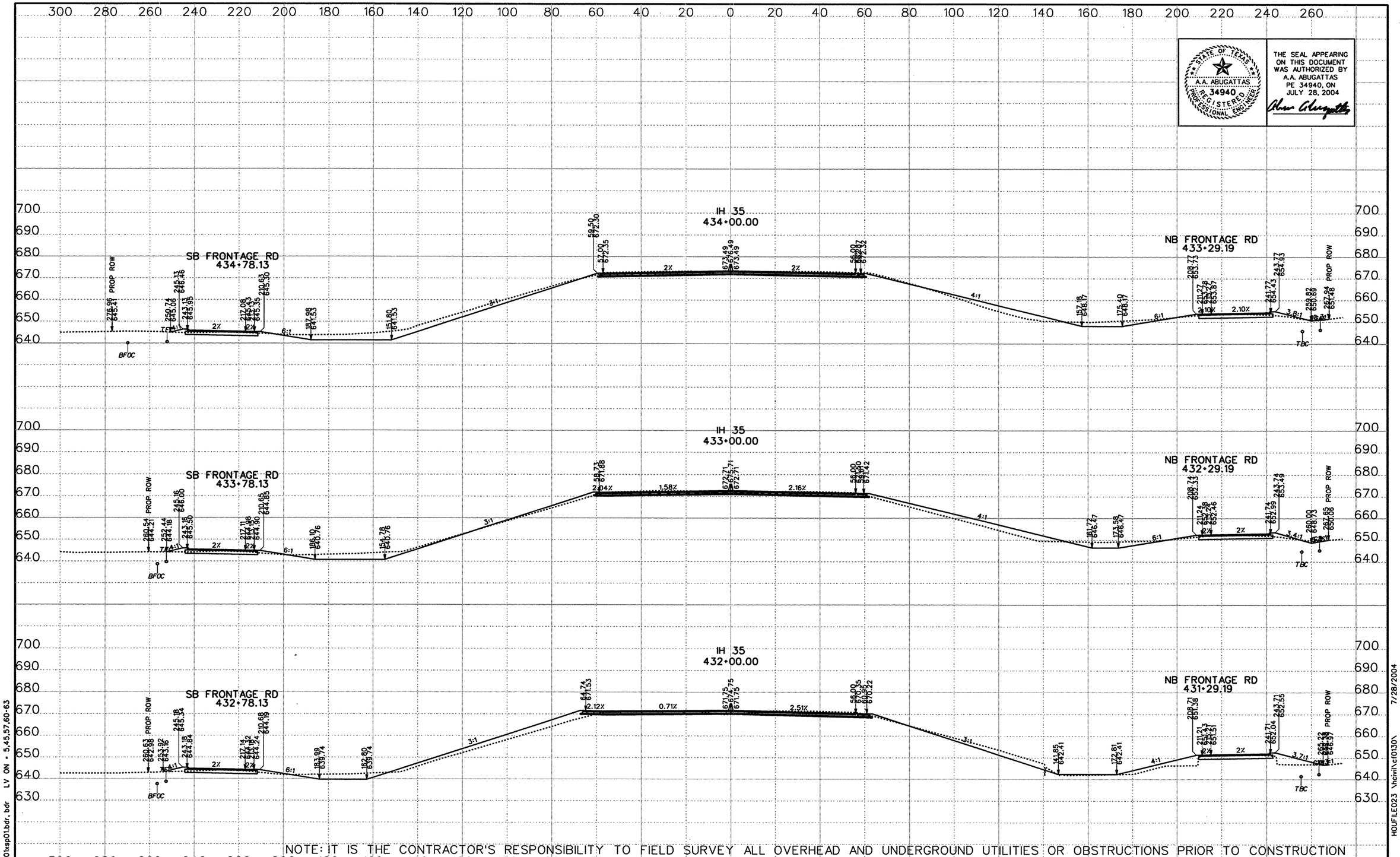

STATE OF TEXAS
A.A. ABUGATTAS
34940
REGISTERED PROFESSIONAL ENGINEER

THE SEAL APPEARING ON THIS DOCUMENT WAS AUTHORIZED BY A.A. ABUGATTAS PE 34940, ON JULY 28, 2004

NOTE: IT IS THE CONTRACTOR'S RESPONSIBILITY TO FIELD SURVEY ALL OVERHEAD AND UNDERGROUND UTILITIES OR OBSTRUCTIONS PRIOR TO CONSTRUCTION

DATE	BY	REV

©2003 Texas Department of Transportation

KBR
Engineered by KBR Technical Services, Inc

SCALE:
1" = 40' HORIZ
1" = 40' VERT
0 ½ 1"

IH 35
LOOP 20 TO UNIROYAL ROAD
PROPOSED CROSS SECTIONS

STATE PROJECT NO			FED RD DIV NO		COUNTY	SHEET 97 OF 104
NH-2002 (79)			6		WEBB	
STATE	DIST NO	CONT	SECT	JOB	HIGHWAY NO	SHEET NO
TEXAS	LAREDO	0018	05	062, ETC	IH 35	978

REF FILE(S): j01xsp01.bdr, bdr LV ON = 5,45,57,60-63

HOUFILE023 \hcivil\c10130\ 7/28/2004

XS ROLL .dgn-

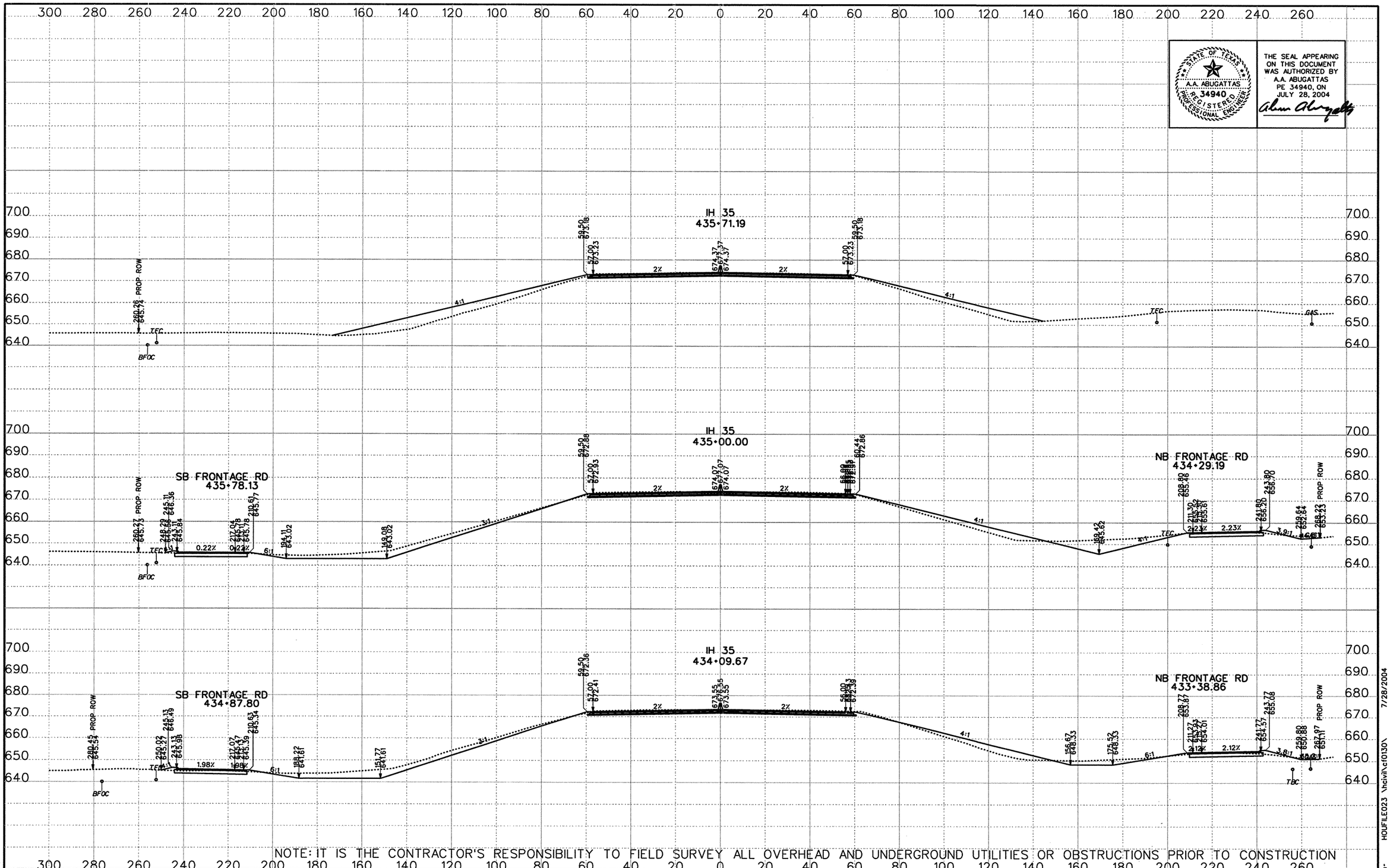

NOTE: IT IS THE CONTRACTOR'S RESPONSIBILITY TO FIELD SURVEY ALL OVERHEAD AND UNDERGROUND UTILITIES OR OBSTRUCTIONS PRIOR TO CONSTRUCTION

THE SEAL APPEARING ON THIS DOCUMENT WAS AUTHORIZED BY A.A. ABUGATTAS PE 34940, ON JULY 28, 2004

STATE OF TEXAS — A.A. ABUGATTAS — 34940 — REGISTERED PROFESSIONAL ENGINEER

DATE	BY	REV

©2003 Texas Department of Transportation

KBR
Engineered by KBR Technical Services, Inc

SCALE:
1" = 40' HORIZ
1" = 40' VERT
0 1/2 1"

IH 35
LOOP 20 TO UNIROYAL ROAD
PROPOSED CROSS SECTIONS

STATE PROJECT NO			FED RD DIV NO		COUNTY	SHEET 98 OF 104
NH-2002 (79)			6		WEBB	
STATE	DIST NO	CONT	SECT	JOB	HIGHWAY NO	SHEET NO
TEXAS	LAREDO	0018	05	062, ETC	IH 35	979

REF FILE(S): j01xsp01.bdr, bdr LV ON = 5,45,57,60-63

HOUFILE023 \hcivil\c10130\ 7/28/2004

XS ROLL .dgn-

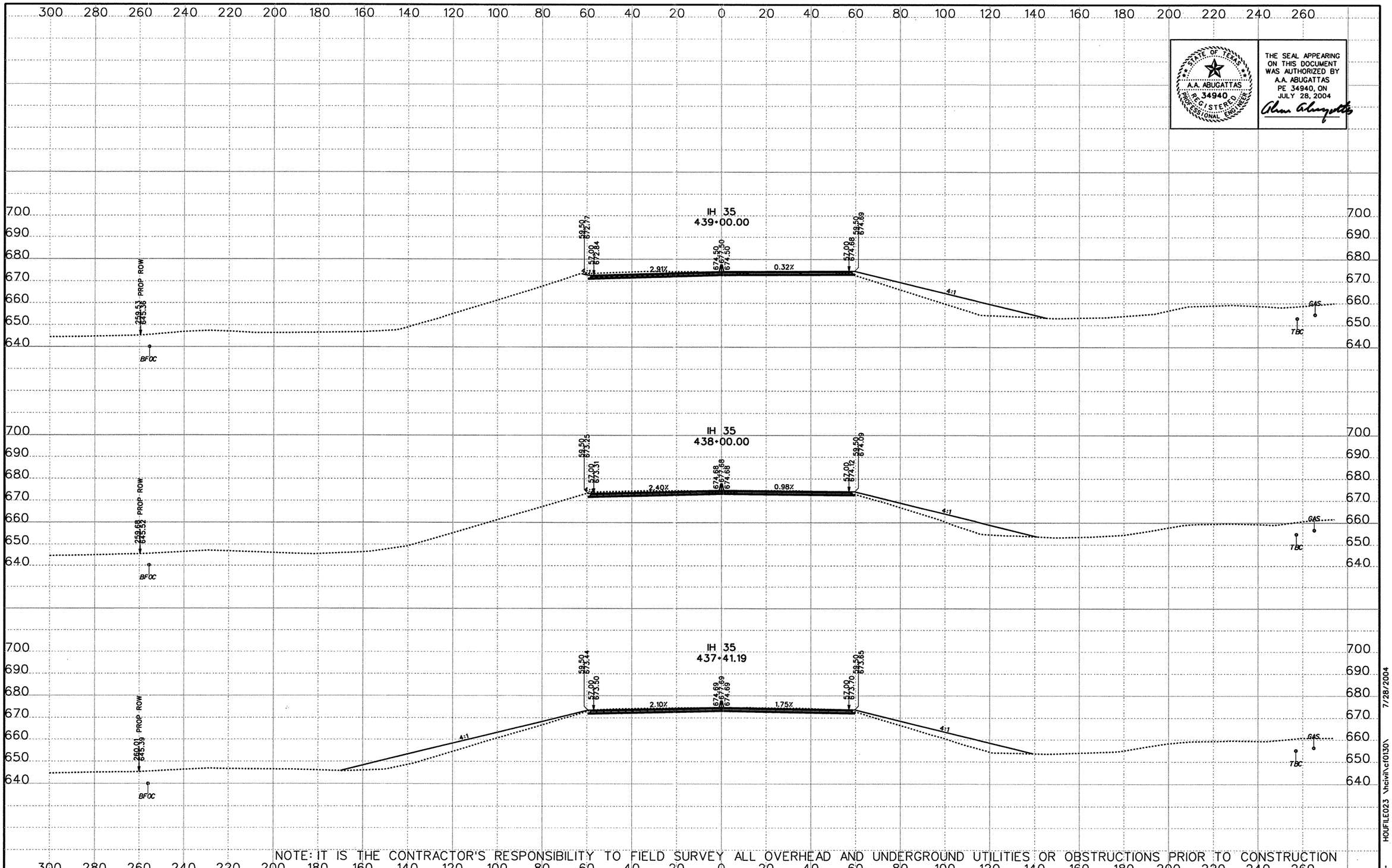

STATE OF TEXAS
A.A. ABUGATTAS
34940
REGISTERED
PROFESSIONAL ENGINEER

THE SEAL APPEARING ON THIS DOCUMENT WAS AUTHORIZED BY A.A. ABUGATTAS PE 34940, ON JULY 28, 2004

NOTE: IT IS THE CONTRACTOR'S RESPONSIBILITY TO FIELD SURVEY ALL OVERHEAD AND UNDERGROUND UTILITIES OR OBSTRUCTIONS PRIOR TO CONSTRUCTION

DATE	BY	REV

©2003 Texas Department of Transportation

KBR
Engineered by KBR Technical Services, Inc

SCALE:
1" = 40' HORIZ
1" = 40' VERT
0 1/2 1"

IH 35
LOOP 20 TO UNIROYAL ROAD
PROPOSED CROSS SECTIONS

STATE PROJECT NO			FED RD DIV NO		COUNTY	SHEET 99 OF 104
NH-2002 (79)			6		WEBB	
STATE	DIST NO	CONT	SECT	JOB	HIGHWAY NO	SHEET NO
TEXAS	LAREDO	0018	05	062, ETC	IH 35	980

REF FILE(S): j01xsp01.bdr, bdr LV ON = 5,45,57,60-63

XS ROLL .dgn- HOUFILE023 \hcivil\cf0130\ 7/28/2004

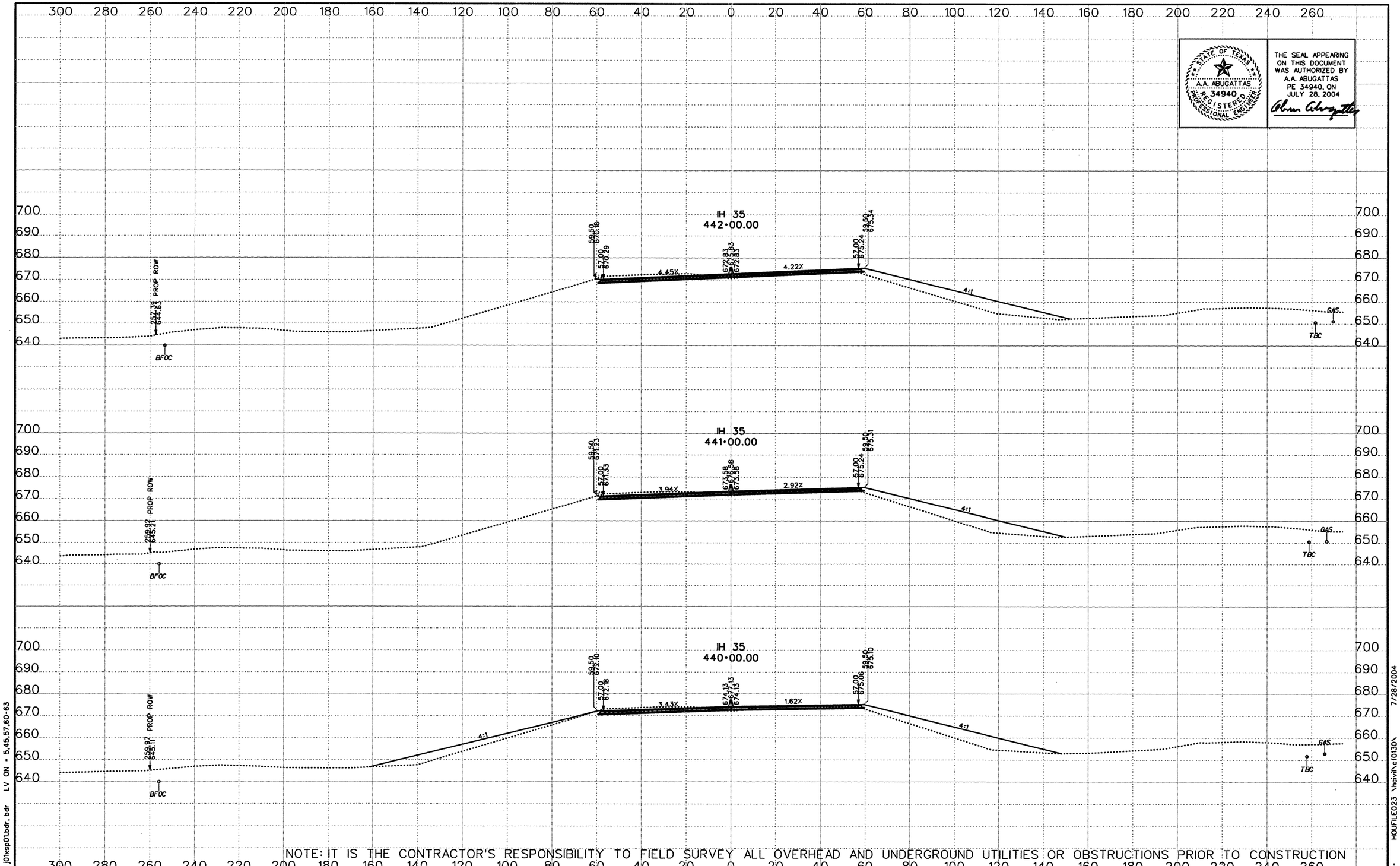

STATE OF TEXAS
A.A. ABUGATTAS
34940
REGISTERED PROFESSIONAL ENGINEER

THE SEAL APPEARING ON THIS DOCUMENT WAS AUTHORIZED BY A.A. ABUGATTAS PE 34940, ON JULY 28, 2004

DATE	BY	REV

©2003 Texas Department of Transportation

KBR
Engineered by KBR Technical Services, Inc

SCALE:
1" = 40' HORIZ
1" = 40' VERT
0 1/2 1"

IH 35
LOOP 20 TO UNIROYAL ROAD
PROPOSED CROSS SECTIONS

STATE PROJECT NO			FED RD DIV NO		COUNTY	SHEET 100 OF 104
NH-2002 (79)			6		WEBB	
STATE	DIST NO	CONT	SECT	JOB	HIGHWAY NO	SHEET NO
TEXAS	LAREDO	0018	05	062, ETC	IH 35	981

REF FILE(S): j01xsp01.bdr, bdr LV ON = 5,45,57,60-63

XS ROLL .dgn- HOUFILE023 \hcivil\cf0130\ 7/28/2004

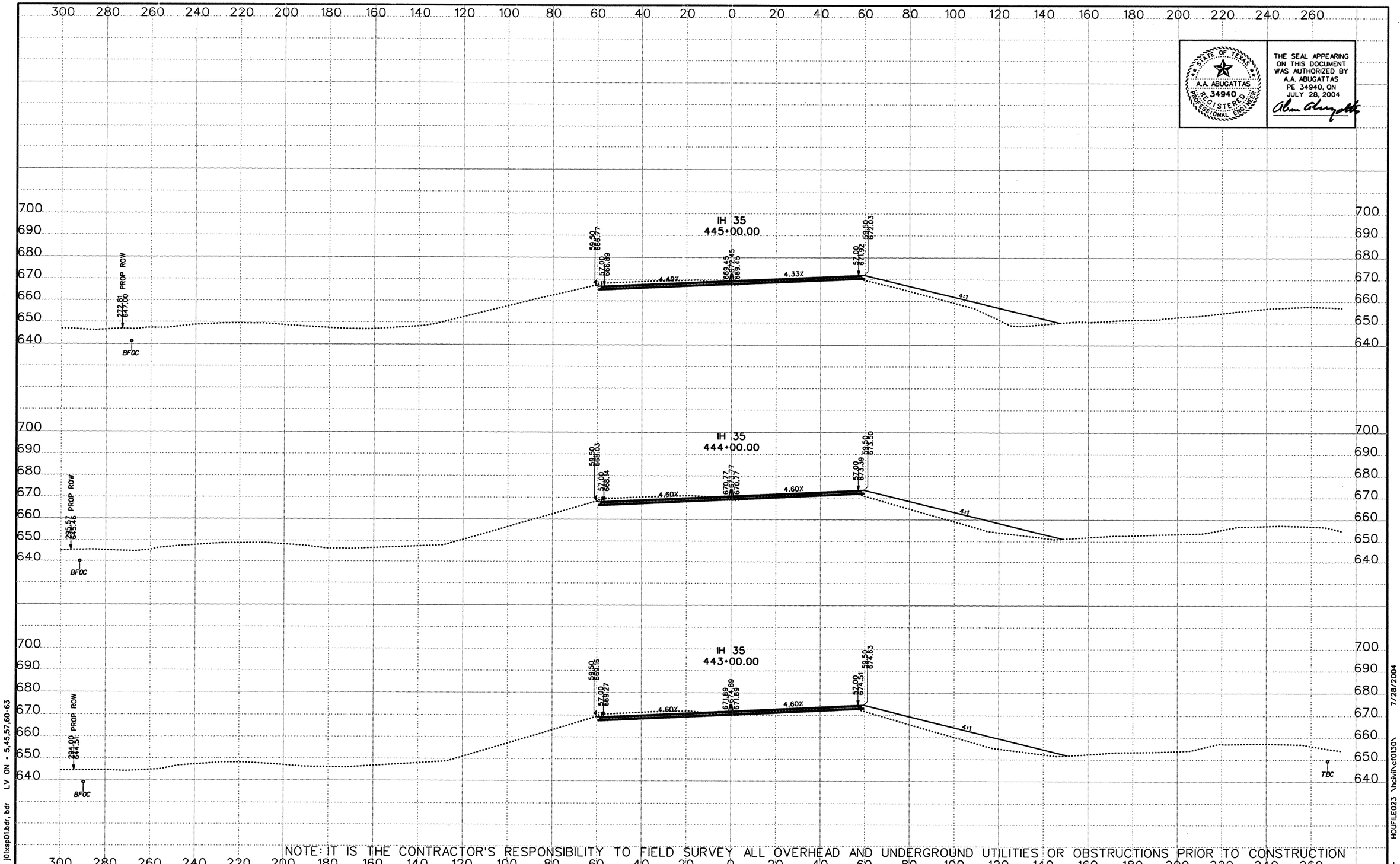

STATE OF TEXAS
A.A. ABUGATTAS
34940
REGISTERED PROFESSIONAL ENGINEER

THE SEAL APPEARING ON THIS DOCUMENT WAS AUTHORIZED BY A.A. ABUGATTAS PE 34940, ON JULY 28, 2004

NOTE: IT IS THE CONTRACTOR'S RESPONSIBILITY TO FIELD SURVEY ALL OVERHEAD AND UNDERGROUND UTILITIES OR OBSTRUCTIONS PRIOR TO CONSTRUCTION

DATE	BY	REV

©2003 Texas Department of Transportation

KBR
Engineered by KBR Technical Services, Inc

SCALE:
1" = 40' HORIZ
1" = 40' VERT
0 1/2 1"

IH 35
LOOP 20 TO UNIROYAL ROAD
PROPOSED CROSS SECTIONS

STATE PROJECT NO			FED RD DIV NO		COUNTY	SHEET 101 OF 104
NH-2002 (79)			6		WEBB	
STATE	DIST NO	CONT	SECT	JOB	HIGHWAY NO	SHEET NO
TEXAS	LAREDO	0018	05	062, ETC	IH 35	982

REF FILE(S): j01xsp01.bdr, bdr LV ON = 5,45,57,60-63

XS ROLL .dgn- HOUFILE023 \hcivil\cf0130\ 7/28/2004

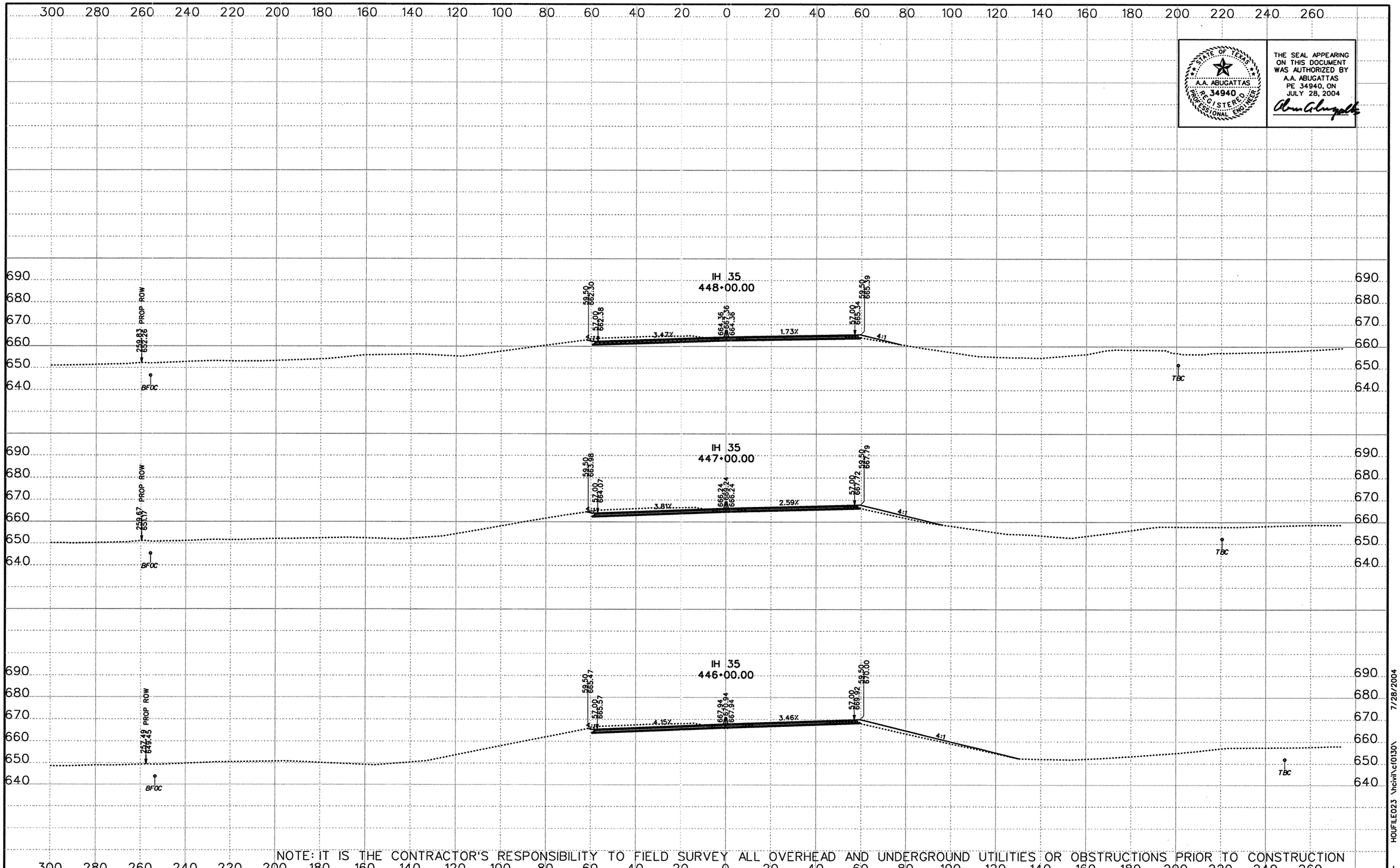

STATE OF TEXAS
A.A. ABUGATTAS
P.E. 34940
REGISTERED PROFESSIONAL ENGINEER

THE SEAL APPEARING ON THIS DOCUMENT WAS AUTHORIZED BY A.A. ABUGATTAS PE 34940, ON JULY 28, 2004

NOTE: IT IS THE CONTRACTOR'S RESPONSIBILITY TO FIELD SURVEY ALL OVERHEAD AND UNDERGROUND UTILITIES OR OBSTRUCTIONS PRIOR TO CONSTRUCTION

DATE	BY	REV

©2003 Texas Department of Transportation

KBR
Engineered by KBR Technical Services, Inc

SCALE:
1" = 40' HORIZ
1" = 40' VERT
0 1/2 1"

IH 35
LOOP 20 TO UNIROYAL ROAD
PROPOSED CROSS SECTIONS

STATE PROJECT NO			FED RD DIV NO		COUNTY	SHEET 102 OF 104
NH-2002 (79)			6		WEBB	
STATE	DIST NO	CONT	SECT	JOB	HIGHWAY NO	SHEET NO
TEXAS	LAREDO	0018	05	062, ETC	IH 35	983

REF FILE(S): j01xsp01.bdr, bdr LV ON = 5,45,57,60-63

XS ROLL .dgn- HOUFILE023 \hcivil\cf0130\ 7/28/2004

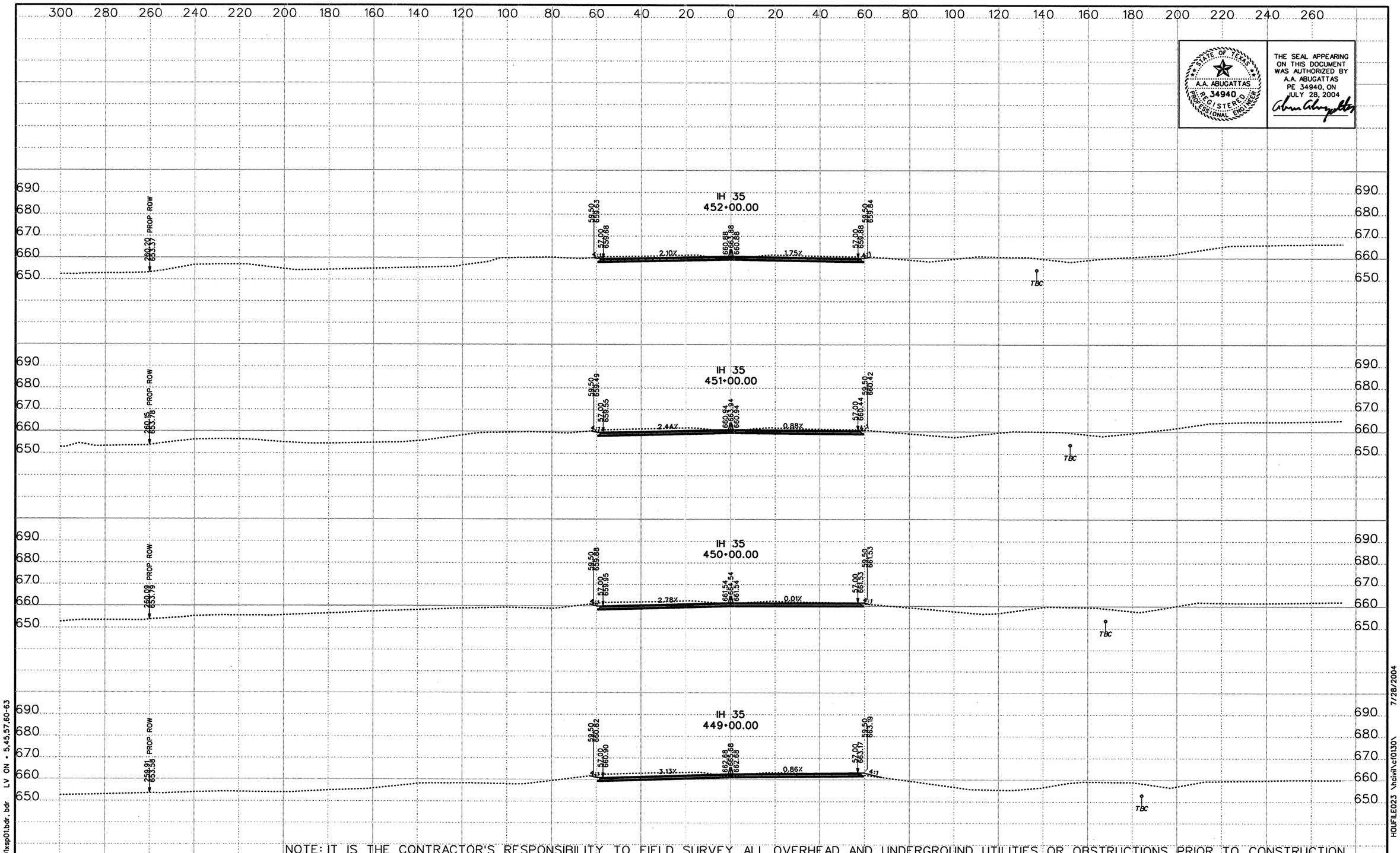

STATE OF TEXAS
A.A. ABUGATTAS
34940
REGISTERED PROFESSIONAL ENGINEER

THE SEAL APPEARING ON THIS DOCUMENT WAS AUTHORIZED BY A.A. ABUGATTAS PE 34940, ON JULY 28, 2004

NOTE: IT IS THE CONTRACTOR'S RESPONSIBILITY TO FIELD SURVEY ALL OVERHEAD AND UNDERGROUND UTILITIES OR OBSTRUCTIONS PRIOR TO CONSTRUCTION

DATE	BY	REV

©2003 Texas Department of Transportation

KBR
Engineered by KBR Technical Services, Inc

SCALE:
1" = 40' HORIZ
1" = 40' VERT
0 1/2 1"

IH 35
LOOP 20 TO UNIROYAL ROAD
PROPOSED CROSS SECTIONS

STATE PROJECT NO			FED RD DIV NO		COUNTY	SHEET 103 OF 104
NH-2002 (79)			6		WEBB	
STATE	DIST NO	CONT	SECT	JOB	HIGHWAY NO	SHEET NO
TEXAS	LAREDO	0018	05	062, ETC	IH 35	984

REF FILE(S): j01xsp01.bdr, bdr LV ON = 5,45,57,60-63

HOUFILE023 \hcivil\cf0130\ 7/28/2004

XS ROLL .dgn-

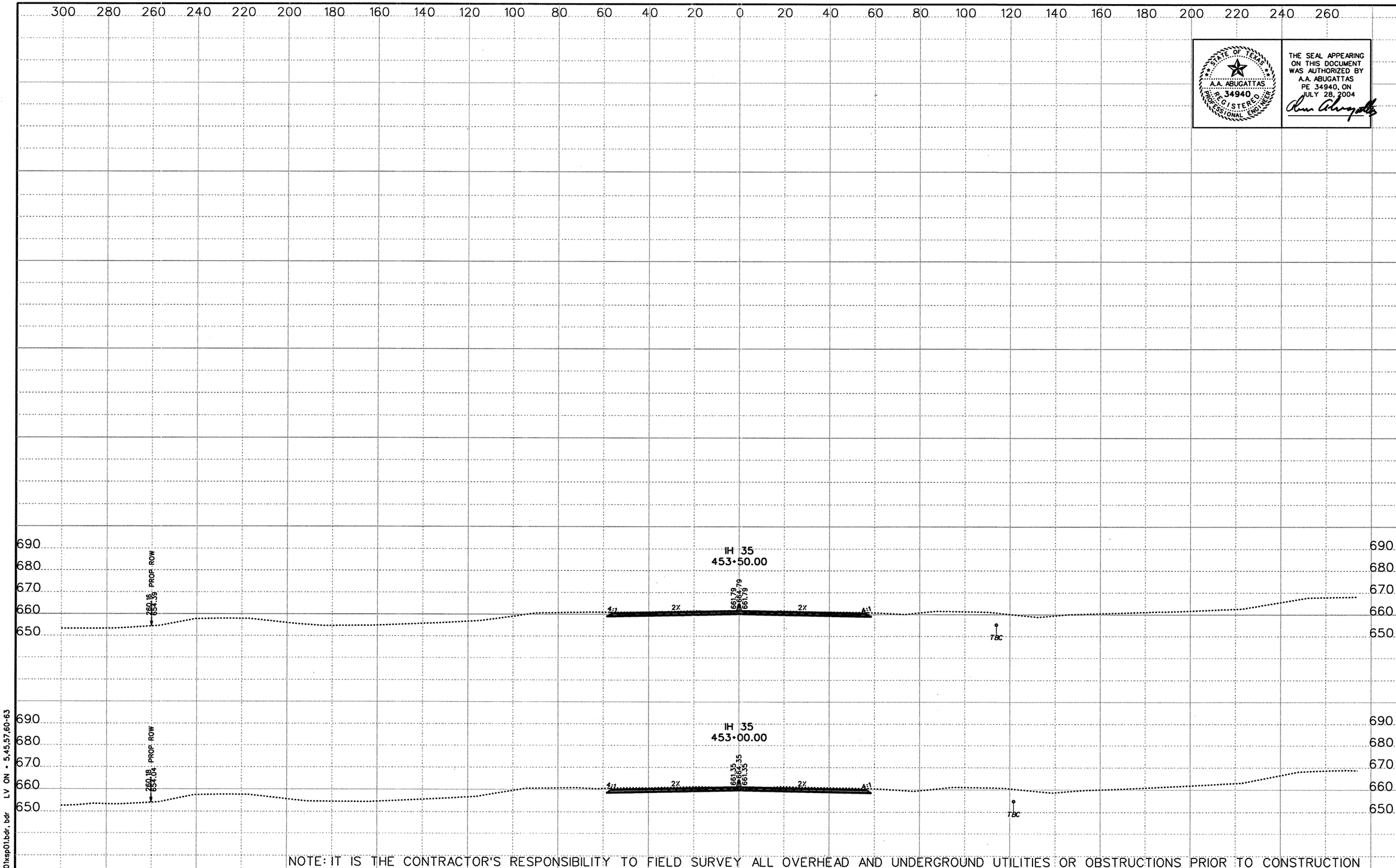

STATE OF TEXAS
A.A. ABUGATTAS
P. 34940
REGISTERED PROFESSIONAL ENGINEER

THE SEAL APPEARING ON THIS DOCUMENT WAS AUTHORIZED BY A.A. ABUGATTAS PE 34940, ON JULY 28, 2004

NOTE: IT IS THE CONTRACTOR'S RESPONSIBILITY TO FIELD SURVEY ALL OVERHEAD AND UNDERGROUND UTILITIES OR OBSTRUCTIONS PRIOR TO CONSTRUCTION

REF FILE(S): j01xsp01.bdr, bdr LV ON = 5,45,57,60-63

7/28/2004 HOUFILE023 \hcivil\cf0130\

XS ROLL .dgn-

DATE	BY	REV

©2003 Texas Department of Transportation

KBR
Engineered by KBR Technical Services, Inc

SCALE:
1" = 40' HORIZ
1" = 40' VERT
0 1/2 1"

IH 35
LOOP 20 TO UNIROYAL ROAD
PROPOSED CROSS SECTIONS

STATE PROJECT NO			FED RD DIV NO		COUNTY	SHEET 104 OF 104
NH-2002 (79)			6		WEBB	
STATE	DIST NO	CONT	SECT	JOB	HIGHWAY NO	SHEET NO
TEXAS	LAREDO	0018	05	062, ETC	IH 35	985

FINAL PLANS

STATE OF TEXAS
TEXAS DEPARTMENT OF TRANSPORTATION

PLANS OF PROPOSED
STATE HIGHWAY IMPROVEMENT

FEDERAL AID PROJECT NO. NH 99(462)
CSJ: 0018-06-131, 0086-14-023, 0018-05-057

	IH 35	LOOP 20	UNIROYAL ROAD	TOTAL
ROADWAY =	13,490.00 FT	10,759.69 FT	500.00 FT	24,749.69 FT = 4.685 MI
BRIDGE =	550.00 FT	0.00 FT	0.00 FT	550.00 FT = 0.104 MI
TOTAL LENGTH =	14,040.00 FT	10,759.69 FT	500.00 FT	25,299.69 FT = 4.789 MI

WEBB COUNTY

IH 35 / LOOP 20

FOR THE CONSTRUCTION OF AN INTERCHANGE FACILITY CONSISTING OF THE CONSTRUCTION OF PAVEMENT, GRADING, DRAINAGE, SIGNING, PAVEMENT MARKING, ILLUMINATION, SW3P, TRAFFIC MANAGEMENT, AND STRUCTURES.

LIMITS (IH 35) : FROM 2.2 MI NORTH OF THE LOOP 20/IH 35 INTERCHANGE TO 0.5 MI SOUTH OF THE LOOP 20/IH 35 INTERCHANGE
LIMITS (LOOP 20) : FROM 0.6 MI WEST OF THE IH 35/LOOP 20 INTERCHANGE TO 1.4 MI EAST OF THE IH 35/LOOP 20 INTERCHANGE
LIMITS (IH 35 @ UNIROYAL ROAD) : FROM 0.2 MI SOUTH OF (UNIROYAL RD) TO 0.3 MI NORTH OF UNIROYAL

INDEX OF SHEETS

SHEET NUMBER	DESCRIPTION
SEE SHEET 2 FOR INDEX	

DESIGN SPEED:

MAINLANES	70 mph
FRONTAGE ROADS	45 mph
RAMPS / DIRECT CONNECTOR	45 mph

FED RD DIV NO	STATE PROJECT NO		SHEET NO
6			1
STATE	STATE DIST NO		COUNTY
TEXAS	22 (LRD)		WEBB
CONT	SECT	JOB	HIGHWAY NO
0018	06	131, etc.	IH35

FINAL PLANS
LETTING DATE : 07/06/99
WORK BEGIN : 09/21/99
DATE ACCEPTED: 01/13/06
CONTRACTOR : Deavers Const.
TOTAL COST :

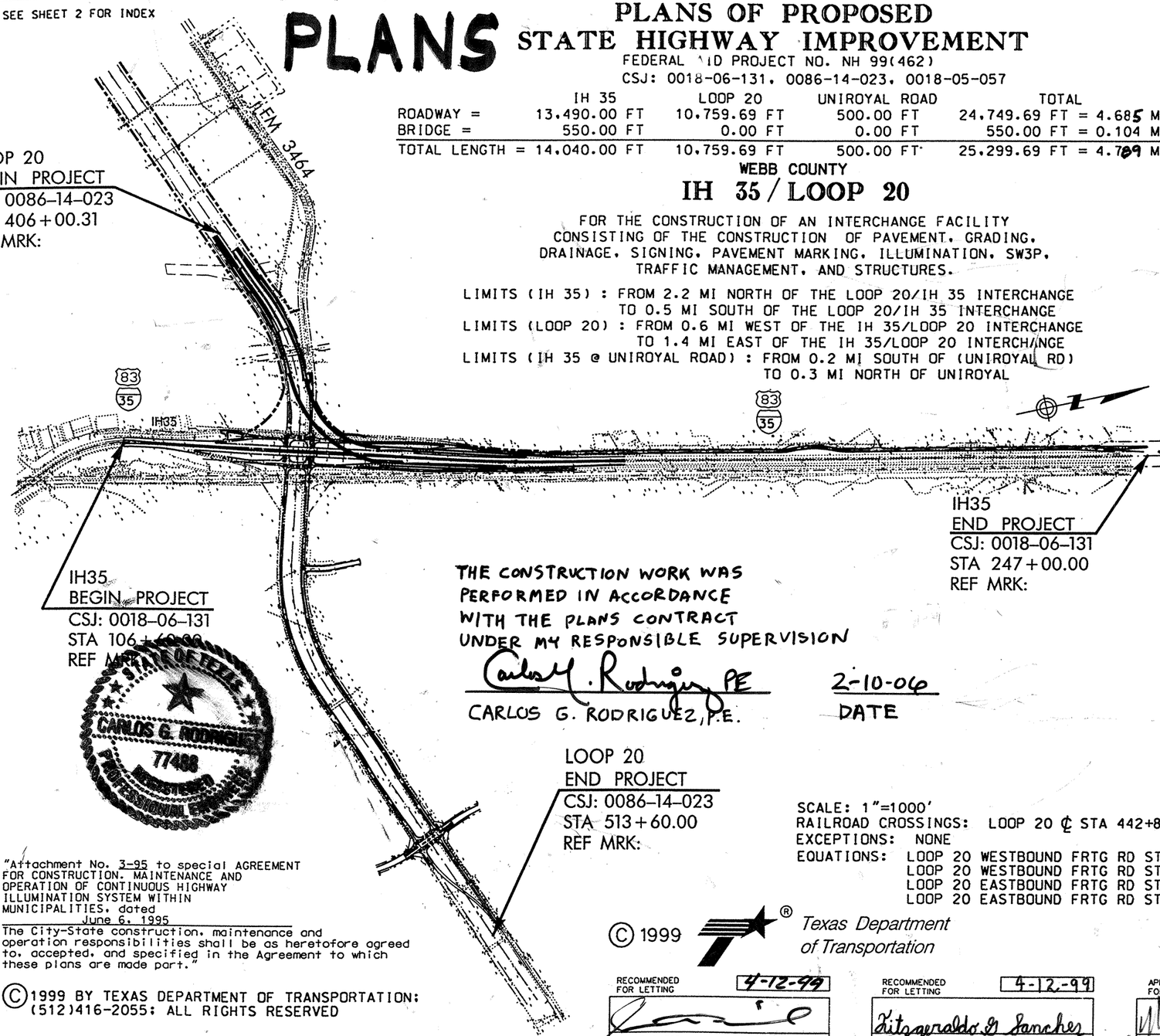

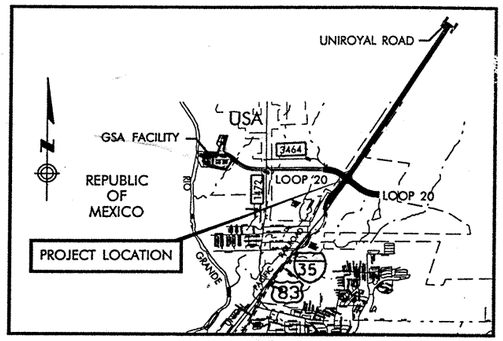

VICINITY MAP
NTS

THE CONSTRUCTION WORK WAS PERFORMED IN ACCORDANCE WITH THE PLANS CONTRACT UNDER MY RESPONSIBLE SUPERVISION

Carlos G. Rodriguez PE
CARLOS G. RODRIGUEZ, P.E.

2-10-06
DATE

STATE OF TEXAS
CARLOS G. RODRIGUEZ
77488
REGISTERED PROFESSIONAL ENGINEER

STATE OF TEXAS
A. A. ABUGATTAS
34940
REGISTERED PROFESSIONAL ENGINEER

The seal appearing on this document was authorized by A. A. Abugattas, P.E. 34940, on April 2, 1999.

Alberto Abugattas

SCALE: 1"=1000'
RAILROAD CROSSINGS: LOOP 20 ℄ STA 442+86.12
EXCEPTIONS: NONE
EQUATIONS: LOOP 20 WESTBOUND FRTG RD STA 436+16.46 BK = 435+18.87 AHD (+97.59')
LOOP 20 WESTBOUND FRTG RD STA 472+68.10 BK = 473+60.37 AHD (-92.27')
LOOP 20 EASTBOUND FRTG RD STA 434+21.27 BK = 435+18.87 AHD (-97.60')
LOOP 20 EASTBOUND FRTG RD STA 474+57.41 BK = 473+60.37 AHD (+97.04')

"Attachment No. 3-95 to special AGREEMENT FOR CONSTRUCTION, MAINTENANCE AND OPERATION OF CONTINUOUS HIGHWAY ILLUMINATION SYSTEM WITHIN MUNICIPALITIES, dated June 6, 1995
The City-State construction, maintenance and operation responsibilities shall be as heretofore agreed to, accepted, and specified in the Agreement to which these plans are made part."

© 1999 BY TEXAS DEPARTMENT OF TRANSPORTATION: (512)416-2055: ALL RIGHTS RESERVED

© 1999 Texas Department of Transportation

COUNTY WEBB PROJ.NO.
HWY.NO. LOOP 20 LETTING DATE
DATE ACCEPTED

Specifications Adopted by the Texas Department of Transportation March 1, 1993 and Specification Items listed and Dated as Follows, shall Govern on this Project: Required Contract Provisions for all Federal-Aid Construction Contracts (Form FHWA 1273).

RECOMMENDED FOR LETTING 4-12-99	RECOMMENDED FOR LETTING 4-12-99	APPROVED FOR LETTING 5/24/99
AREA ENGINEER	Fitzgerald G. Sanchez, DIRECTOR OF OPERATIONS	for Mario G. Villarreal, P.E., DIRECTOR OF DESIGN DIVISION
RECOMMENDED FOR LETTING 4-12-99	RECOMMENDED FOR LETTING 4-12-99	
Robert D. Austin, DIRECTOR OF TRANSPORTATION PLANNING AND DEVELOPMENT	for Ernest A. Morales, DISTRICT ENGINEER	

US DEPARTMENT OF TRANSPORTATION
FEDERAL HIGHWAY ADMINISTRATION

Approved _____ 19 ____

Division Administrator

BROWN & ROOT
P O BOX 3
HOUSTON, TEXAS 77001-0003

PART 1 OF 4

WEBB NH 99(462)

REF FILE(S): JO1LOX01.ROW, ROW LV ON = 1-61.63
JO1LOX01.FND, FND LV ON = 1-34.36-63
JO1LOX01.BCK, BCK LV ON = 2-28.30.32-34.36.37.39.41-53.58-63
JO1LOX01.ALG, ALG LV ON = 1.2.10.15
JO1LOX01.EOP, EOP LV ON = 17.25-28.38
JO1LOX01.BDR, BDR LV ON = 5.45.47.57.60-62

REF FILE(S): JO1LOX01.DRN, DRN LV ON = 1-63
OLD02.BCK, BCK LV ON = 2-28.30.32-34.36.37.39.41-53.58-63
LARKMAP LV ON = 1-61.63
LV ON =
LV ON =
LV ON =

DO3CSX01.DGN-09 04-05-99 BAR_HO_ES05 F:\CF0039\PHASE2

Drawing List for Loop 20/IH 35 Project

Sheet #'s	# Sheets	Description
		VOLUME I
1- 1	1	Title Sheet
2- 3	2	Index of Sheets
4- 4	1	Project Layout and Benchmark Location Map
5- 8	4	Benchmark Descriptions
9- 27	19	Typical Sections
28- 37b	11	Basis of Estimate
38- 38	1	General Notes and Specifications Data
39- 39	1	Omitted
		Summary Sheets
40- 41	2	Summary of Traffic Control Plan Quantities
42- 50	9	Summary of Roadway Quantities
51- 51	1	Summary of Roadway Quantities - Removal
52- 57	6	Summary of Storm Sewer System Quantities
58- 60	3	Summary of Inlets and Manholes Quantities
61- 61	1	Omitted
62- 62	1	Summary of SW3P Quantities
63- 64	2	Summary of Culvert Quantities Bridge Class Culvert and Misc. Culverts
65- 65	1	Summary of Removal of Existing Structure Quantities and Curb Outlets
66- 66	1	Summary of Retaining Wall Quantities
67- 67	1	Summary of Bridge Quantities
68- 69	2	Summary of Signing Quantities
70- 71	2	Summary of Pavement Marking Quantities
72- 73	2	Summary of Traffic Management Quantities
74- 74	1	Summary of Traffic Signal Quantities
75- 76	2	Summary of Illumination Quantities
77- 77	1	Summary of Landscaping Quantities
		Traffic Control Plans/Details
78- 78	1	Loop 20 / IH 35 Traffic Control Plan General Notes
79- 80	2	Sequence of Construction Description
81- 81	1	Traffic Control Plan Advanced Signing Layout
82- 83	2	Traffic Control Plan Construction Sign Details
84- 84	1	Loop 20 TCP Detour Horizontal Alignment Data
85- 86	2	IH 35 TCP Detour Horizontal Alignment Data
87- 89	3	Loop 20 Detour Plan & Profile 3464RR. 20W1A.20W3A
90- 94	5	IH 35 Detour Plan & Profile 35S1B. 35N1A. 35N1B. 35RR. 35S1D
95- 95	1	Loop 20 Overall Construction Plan Phase I
96- 96	1	IH 35 Overall Construction Plan Phase I
97- 97	1	Loop 20 TCP Typical Sections Phase I
98- 98	1	IH 35 TCP Typical Sections Phase I
99- 110	12	Loop 20 Traffic Control Plans - Phase I
111- 112	2	McPherson Road Traffic Control Plan Phase I
113- 121	9	IH 35 Traffic Control Plans - Phase I
122- 122	1	Loop 20 Overall Construction Plan Phase IA
123- 123	1	IH 35 Overall Construction Plan Phase IA
124- 124	1	Loop 20 TCP Typical Sections Phase IA
125- 125	1	IH 35 TCP Typical Sections Phase IA
126- 130	5	Loop 20 Traffic Control Plans - Phase IA
131- 139	9	IH 35 Traffic Control Plans - Phase IA
140- 140	1	Loop 20 Overall Construction Plan Phase II
141- 141	1	IH 35 Overall Construction Plan Phase II
142- 142	1	IH 35 TCP Typical Sections Phase II
143- 150	8	Loop 20 Traffic Control Plans - Phase II
151- 159	9	IH 35 Traffic Control Plans - Phase II
160- 160	1	Loop 20 Overall Construction Plan Phase IIA
161- 161	1	IH 35 Overall Construction Plan Phase IIA
162- 163	2	Loop 20 Traffic Control Plans - Phase IIA
164- 165	2	IH 35 Traffic Control Plans - Phase IIA
166- 166	1	Loop 20 Overall Construction Plan Phase III
167- 167	1	IH 35 Overall Construction Plan Phase III
168- 168	1	Loop 20 TCP Typical Sections Phase III
169- 180	12	Loop 20 Traffic Control Plans - Phase III
181- 189	9	IH 35 Traffic Control Plans - Phase III
190- 190	1	Loop 20 Overall Construction Plan Phase IV
191- 191	1	IH 35 Overall Construction Plan Phase IV
192- 192	1	IH 35 TCP Typical Sections Phase IV
193- 199	7	Loop 20 Traffic Control Plans - Phase IV
200- 204	5	McPherson Road Traffic Control Plans - Phase IV
205- 206	2	McPherson Road Traffic Control Plans - Phase IV Traffic Switch
207- 215	9	IH 35 Traffic Control Plans - Phase IV
216- 216	1	Uniroyal Road TCP Detour Horizontal Alignment Data
217- 217	1	Uniroyal Road Traffic Control Plans Detour Details
218- 229	12	Uniroyal Road Traffic Control Plans (Phase I. IA. II. III. IIIA. IV. V. VI)
		Traffic Control Standards
230- 241	12	● Barricade and Construction Standards BC (1) thru (9C) - 98
242- 242	1	● Work Zone Channelizing Devices on Flexible Supports WZ (CD) - 94
243- 243	1	● Special Public Information Sign WZ (SPIS) - 98
244- 244	1	● Traffic Control Plan TCP (NOTES) - 98
245- 245	1	● Traffic Control Plan TCP (2-5) - 98
		Geometric Data
246- 250	5	Horizontal Alignment Layouts
251- 257	7	Geometric Data Summary
		Roadway Plan/Profiles/Details
258- 259	2	Loop 20 Mainlane Plan & Profile
260- 269	10	Loop 20 Westbound Frontage Road Plan & Profile
270- 277	8	Loop 20 Eastbound Frontage Road Plan & Profile
278- 284	7	IH 35 Plan & Profile
285- 290	6	IH 35 Northbound Frontage Road Plan & Profile
291- 304	14	IH 35 Southbound Frontage Road Plan & Profile
305- 311	7	Direct Connector #1 Plan & Profile
312- 318	7	Direct Connector #2 Plan & Profile
319- 329	11	Ramps A. B. C. D. E. F. H. K. M. P
330- 330	1	Grand Central Rd Plan & Profile
331- 332	2	McPherson Plan & Profile
333- 333	1	Uniroyal Road Plan & Profile
334- 335	2	Loop 20 and IH 35 Intersection Layout
336- 336	1	McPherson Intersection Layout
337- 338	2	Loop 20 and IH 35 Contour Grading Plan
339- 339	1	McPherson Road Contour Grading Plan
340- 342	3	Loop 20 Grading Plan
342A-342A	1	Loop 20 Embankment Plan
343- 343	1	Uniroyal Road Intersection Grading Plan
344- 344	1	Omitted
345- 345	1	Omitted
346- 349	4	Omitted
350- 350	1	Loop 20 Eastbound and Westbound Mainlane Superelevation Diagrams
351- 351	1	IH 35 Northbound and Southbound Mainlane Superelevation Diagrams
352- 352	1	Direct Connector #1 and Direct Connector # 2 Superelevation Diagrams
353- 361	9	Removal Layout
362- 362	1	IH 35 Underdrain System Layout
363- 363	1	Pedstrian Rail Type PR1 (MOD)
		Roadway Standards - Laredo District
364- 366	3	Continuously & Jointed Reinforced Concr Pavmt Details-Wide Flange Terminal Anchorage Systems
367- 367	1	Fast Track Continously Reinforced Concrete Pavement - CRCP-(FS)-92
368- 368	1	Concrete Pavement Junctures
369- 369	1	Wheelchair Ramp and Sidewalk Details
		Roadway Standards - State
370- 370	1	● Concrete Pavement Details CPCR (1)-94
371- 371	1	● Concrete Curb and Gutter CCCG-95
372- 373	2	● Single Slope Traffic Rail Type SSTR
374- 374	1	● Single Slope Concrete Barrier Type 2 SSCB (2)-99
375- 375	1	● Metal Beam Guard Fence MBGF-94
376- 377	2	● Single Guardrail Terminal SGT (5 & 6) -97
378- 379	2	● Reusable Energy Absorbing Crash Terminal - Narrow React 350 - REACT(N)-99
380- 380	1	● Chain Link Barrier Fence CLF-96
380A-380A	1	● Depressed Shoulder Texturing ST(1)-96
		Drainage Plans/Details
381- 381	1	Offsite Drainage Area Map
382- 392	11	Drainage Area Map
393- 393	1	Culvert Layout - Culvert # 6
394- 394	1	Culvert Layout - Culvert # 7
395- 395	1	Culvert Layout - Culvert # 8
396- 399	4	Culvert Extension - S1.S2. S3. & S4 (IH 35)
400- 401	2	Culvert Extension - W 6 & W7 (Loop 20)
402- 416	15	Hydraulic Data Sheets
417- 427	11	Loop 20 Storm Sewer / Ditch Plan and Profile
428- 428	1	Loop 20 Grand Central Road Storm Sewer / Ditch Plan and Profile
429- 429	1	Loop 20 McPherson Road / Ditch Plan and Profile
430- 445	16	IH 35 Storm Sewer / Ditch Plan and Profile
446- 463	18	Storm Sewer Laterals
464- 464	1	Curb Outlet
465- 465	1	Inlet/Outlet Detail
466- 466	1	Type M (MOD) Manhole with or without Type A Grate Inlet Details
467- 467	1	Type H (MOD) Inlet & Grate Details
468- 470	3	Type ADR and AZR Inlets
471- 471	1	Single Culvert 30 Skew SC-30-A (MOD)
472- 472	1	Single Culvert 30 Skew SC-45-A (MOD)
473 473	1	Miscellaneous Drainage Details
473A 473A	1	Precast Concrete Box Culvert - PC-5 (MOD)
		Storm Drainage Standards
474- 474	1	● Type A . AD. & AAD Inlets
475- 475	1	● Curb Inlet Type C and Extension Type E (IL-C)
476- 476	1	● Curb Inlet Type C1
477- 477	1	● Storm Sewer Manholes
478- 479	2	● Cross Drainage Safety Pipe Runners - CD-SPR
480- 480	1	● Parallel Drainage Safety Pipe Runners - PD-SPR
481- 482	2	● Excavation and Backfill Diagrams
483- 483	1	● PSET-RP
484- 484	1	● Precast Safety End Treatment - PSET-SP
485- 485	1	● Lengthening Details - SCL
486- 486	1	● Parallel Wingwall Normal - MCW-P
487- 487	1	● Parallel Wingwall 30 Skew - MCW-P- 30
488- 488	1	● Parallel Wingwall 30 Skew -PW-30
489- 489	1	● Parallel Wingwall for Multiple Box Culverts - MCW-P-45
490- 492	3	● Multiple Box Culverts MC-5-2. MC-6-2(MOD). MC-8-2
493- 493	1	● Single Culvert 30 Skew SC-30 B-C
494- 494	1	● Precast Concrete Box Culvert - PC-5
		Storm Water Pollution Prevention Plan (SW3P) Plan
495- 495	1	General Storm Water Pollution Prevention (SW3P) Plan
496- 504	9	Storm Water Pollution Prevention Plan (SW3P) Plan
		SW3P Standards
505- 511	7	● Temporary Erosion Sediment and Water Pollution Control Measures - EC (1. 2. 3. 4.5.6 & 7) - 93
		VOLUME II
		Bridge Plans
512- 512	1	Key Plan Bridges
513- 522	10	Direct Connector #1 Bridge Layouts
523- 523	1	Direct Connector #1 Estimated Quantities and Bearing Seat Elevations
524- 527	4	Direct Connector #1 Soil Borings
528- 532	5	Direct Connector #1 Foundation Plan
533- 540	8	Direct Connector #1 Footing Details
541- 542	2	Direct Connector #1 Abutment Details
543- 578	36	Direct Connector #1 Bent Details
579- 588	10	Direct Connector #1 Concrete Units- Spans 1 - 13
589- 600	12	Direct Connector #1 Steel Units - Spans 14 - 22
601- 606	6	Direct Connector #1 Concrete Units - Spans 23 - 30
607- 609	3	Direct Connector #1 Slab Details
610- 618	9	Direct Connector #2 Bridge Layouts
619- 619	1	Direct Connector #2 Estimated Quantities and Bearing Seat Elevations
620- 623	4	Direct Connector #2 Soil Borings
624- 628	5	Direct Connector #2 Foundation Plan
629- 635	7	Direct Connector #2 Footing Details
636- 637	2	Direct Connector #2 Abutment Details
638- 678	41	Direct Connector #2 Bent Details
679- 688	10	Direct Connector #2 Concrete Units- Spans 1 - 11
689- 700	12	Direct Connector #2 Steel Units - Spans 12 - 19
701- 708	8	Direct Connector #2 Concrete Units - Spans 20 - 29
709- 711	3	Direct Connector #2 Slab Details
712- 712	1	Direct Connectors #1 & #2 Prestressed Concrete I-Beams (Non-Standard Spans) - IBNS
713- 721	9	Typical Details Direct Connectors #1& #2 Architectural Treatment Reinf. Details
722- 723	2	Typical Plate Girder Details
724- 724	1	Field Splice Details Bolted Alternate
725- 725	1	Elastomeric Bearing Details
726- 727	2	Modular Expansion Joint Details
728- 729	2	Southbound IH 35 Mainlanes at Loop 20 Bridge Layouts
730- 730	1	Southbound IH 35 Mainlanes at Loop 20 Estimated Quantities and Bearing Seat Elevations
731- 731	1	Southbound IH 35 Mainlanes at Loop 20 Soil Borings
732- 734	3	Southbound IH 35 Mainlanes at Loop 20 Abutment Details
735- 738	4	Southbound IH 35 Mainlanes at Loop 20 Bent Details
739- 739	1	Southbound IH 35 Mainlanes at Loop 20 Drill Shaft Details
740- 743	4	Southbound IH 35 Mainlanes at Loop 20 Concrete Units
744- 745	2	Northbound IH 35 Mainlanes at Loop 20 Bridge Layouts
746- 746	1	Northbound IH 35 Mainlanes at Loop 20 Estimated Quantities and Bearing Seat Elevations
747- 749	3	Northbound IH 35 Mainlanes at Loop 20 Abutment Details

SEE REVISION

STATE OF TEXAS
A. A. ABUGATTAS
34940
REGISTERED PROFESSIONAL ENGINEER

The seal appearing on this document was authorized by A. A. Abugattas, P.E. 34940, on April 16, 1999.

DATE	BY	REV	REVISION

© 1999 Texas Department of Transportation

Brown & Root
HOUSTON, TEXAS

IH 35

INDEX OF SHEETS

SHEET 1 OF 2

FED RD DIV NO	STATE PROJECT NO	SHEET NO
6	NH-99(462)	2

STATE	STATE DIST NO	COUNTY
TEXAS	22	WEBB

CONT	SECT	JOB	HIGHWAY NO
0018	06	131	IH 35

D03ISXOI.DGN-09 04-16-99 BAR_HO_ES05 \HCIVIL\CF0039\PHASE2

Drawing List for Loop 20/IH 35 Project

Sheet #'s	# Sheets	Description
		VOLUME I
1- 1	1	Title Sheet
2- 3	2	Index of Sheets
4- 4	1	Project Layout and Benchmark Location Map
5- 8	4	Benchmark Descriptions
9- 27	19	Typical Sections
28- 37A	11	Basis of Estimate
38- 38C1	1	General Notes and Specifications D to
39- 39G	1	ESTIMATE & QUANTITY
		Summary Sheets
40- 41	2	Summary of Traffic Control Plan Quantities
42- 50	9	Summary of Roadway Quantities
51- 51	1	Summary of Roadway Quantities - Removal
52- 57	6	Summary of Storm Sewer System Quantities
58- 60	3	Summary of Inlets and Manholes Quantities
61- 61	1	Omitted
62- 62	1	Summary of SW3P Quantities
63- 64	2	Summary of Culvert Quantities Bridge Class Culvert and Misc. Culverts
65- 65	1	Summary of Removal of Existing Drainage Structures Quantities and Curb Outlets
66- 66	1	Summary of Retaining Wall Quantities
67- 67	1	Summary of Bridge Quantities
68- 69	2	Summary of Signing Quantities
70- 71	2	Summary of Pavement Marking Quantities
72- 73	2	Summary of Traffic Management Quantities
74- 74	1	Summary of Traffic Signal Quantities
75- 76	2	Summary of Illumination Quantities
77- 77	1	Summary of Landscaping Quantities
		Traffic Control Plans/Details
78- 78	1	Loop 20 / IH 35 Traffic Control Plan General Notes
79- 80	2	Sequence of Construction Description
81- 81	1	Traffic Control Plan Advanced Signing Layout
82- 83	2	Traffic Control Plan Construction Sign Details
84- 84	1	Loop 20 TCP Detour Horizontal Alignment Data
85- 86	2	IH 35 TCP Detour Horizontal Alignment Data
87- 89	3	Loop 20 Detour Plan & Profile 3464RR, 20W1A, 20W3A
90- 94	5	IH 35 Detour Plan & Profile 35S1B, 35N1A, 35N1B, 35RR, 35S1D (SHT. 93 OMITTED)
95- 95	1	Loop 20 Overall Construction Plan Phase I
96- 96	1	IH 35 Overall Construction Plan Phase I
97- 97	1	Loop 20 TCP Typical Sections Phase I
98- 98	1	IH 35 TCP Typical Sections Phase I
99- 110	12	Loop 20 Traffic Control Plans - Phase I
111- 112	2	McPherson Road Traffic Control Plan Phase I
113- 121	9	IH 35 Traffic Control Plans - Phase I
122- 122	1	Loop 20 Overall Construction Plan Phase IA
123- 123	1	IH 35 Overall Construction Plan Phase IA
124- 124	1	Loop 20 TCP Typical Sections Phase IA
125- 125	1	IH 35 TCP Typical Sections Phase IA
126- 130		Loop 20 Traffic Control Plans - Phase IA
131- 139	9	IH 35 Traffic Control Plans - Phase IA
140- 140	1	Loop 20 Overall Construction Plan Phase II
141- 141	1	IH 35 Overall Construction Plan Phase II
142- 142	1	IH 35 TCP Typical Sections Phase II
143- 150	8	Loop 20 Traffic Control Plans - Phase II
151- 159	9	IH 35 Traffic Control Plans - Phase II
160- 160	1	Loop 20 Overall Construction Plan Phase IIA
161- 161	1	IH 35 Overall Construction Plan Phase IIA
162- 163	2	Loop 20 Traffic Control Plans - Phase IIA
164- 165	2	IH 35 Traffic Control Plans - Phase IIA
166- 166	1	Loop 20 Overall Construction Plan Phase III
167- 167	1	IH 35 Overall Construction Plan Phase III
168- 168	1	Loop 20 TCP Typical Sections Phase III
169- 180	12	Loop 20 Traffic Control Plans - Phase III
181- 189	9	IH 35 Traffic Control Plans - Phase III
190- 190	1	Loop 20 Overall Construction Plan Phase IV
191- 191	1	IH 35 Overall Construction Plan Phase IV
192- 192	1	IH 35 TCP Typical Sections Phase IV
193- 199	7	Loop 20 Traffic Control Plans - Phase IV
200- 204	5	McPherson Road Traffic Control Plans - Phase IV
205- 206	2	McPherson Road Traffic Control Plans - Phase IV Traffic Switch
207- 215	9	IH 35 Traffic Control Plans - Phase IV
216- 216	1	Uniroyal Road TCP Detour Horizontal Alignment Data
217- 217	1	Uniroyal Road Traffic Control Plans Detour Details
218- 229	12	Uniroyal Road Traffic Control Plans (Phase I, IA, II, III, IIIA, IV, V, VI)
229A-229E	6	Temporary Traffic Signal Details
		Traffic Control Standards
230- 241	12	* Barricade and Construction Standards BC (1) thru (9C) - 98
242- 242	1	* Work Zone Channelizing Devices on Flexible Supports WZ (CD) - 94
243- 243	1	* Special Public Information Sign WZ (SPIS) - 98A
244- 244	1	* Traffic Control Plan TCP (NOTES) - 98
245- 245	1	* Traffic Control Plan TCP (2-5) - 98
		Geometric Data
246- 250	5	Horizontal Alignment Layouts
251- 257	7	Geometric Data Summary
		Roadway Plan/Profiles/Details
258- 259	2	Loop 20 Mainlane Plan & Profile
260- 269	10	Loop 20 Westbound Frontage Road Plan & Profile
270- 277	8	Loop 20 Eastbound Frontage Road Plan & Profile
278- 284	7	IH 35 Plan & Profile
285- 290	6	IH 35 Northbound Frontage Road Plan & Profile 291A SB FR RD TEMP DETOUR
291- 304	1	IH 35 Southbound Frontage Road Plan & Profile
305- 311	7	Direct Connector #1 Plan & Profile
312- 318	7	Direct Connector #2 Plan & Profile
319- 329	11	Ramps A, B, C, D, E, F, H, K, M, P, KILLAM RAMP DETOUR 329A
330- 330	1	Grand Central Rd Plan & Profile
331- 332	2	McPherson Plan & Profile
333- 333	1	Uniroyal Road Plan & Profile
334- 335	2	Loop 20 and IH 35 Intersection Layout
335A-335A	1	Grand Central Rd Intersection Layout
336- 336	1	McPherson Intersection Layout
337- 338	2	Loop 20 and IH 35 Contour Grading Plan
339- 339	1	McPherson Road Contour Grading Plan
340- 342	3	Loop 20 Grading Plan
342A-342A	1	Loop 20 Embankment Plan
343- 343	1	Uniroyal Road Intersection Grading Plan
344- 344	1	LOOP 20 GRAND CENTRAL RD. CONSTR. EASEMENT PLAN
345- 345	1	LOOP 20 DIRECT CONNECTOR CONTOUR GRADING PLAN
346- 349	4	IH35 SUPER ELEVATION TRANSITION DETAILS
350	1	Loop 20 Eastbound and Westbound Mainlane Superelevation Diagrams
351		IH 35 Northbound and Southbound Mainlane Superelevation Diagrams

Sheet #'s	# Sheets	Description
352- 352	1	Direct Connector #1 and Direct Connector # 2 Superelevation Diagrams
353- 361	9	Removal Layout
362- 362	1	IH 35 Underdrain System Layout
363- 363	1	Pedstrian Rail Type PR1 (MOD)
		Roadway Standards - Laredo District
364- 366	3	Continuously & Jointed Reinforced Concr Pavmt Details-Wide Flange Terminal Anchorage Systems
367- 367	1	Fast Track Continously Reinforced Concrete Pavement - CRCP-(FS)-92
368- 368	1	Concrete Pavement Junctures
369- 369	1	Wheelchair Ramp and Sidewalk Details
		Roadway Standards - State
370- 370	1	* Concrete Pavement Details CPCR (1)-94
371- 371	1	* Concrete Curb and Gutter CCCG-95
372- 373	2	* Single Slope Traffic Rail Type SSTR
374- 374	1	* Single Slope Concrete Barrier Type 2 SSCB (2)-99
375- 375	1	* Metal Beam Guard Fence MBGF-94
376- 377	2	* Single Guardrail Terminal SGT (5 & 6) -97
378- 379	2	* Reusable Energy Absorbing Crash Terminal - Narrow React 350 - REACT(N)-99
380- 380	1	* Chain Link Barrier Fence CLF-96
380A-380A	1	* DEPRESSED SHOULDER TEXTURING ST (1)-96
		Drainage Plans/Details
381- 381	1	Offsite Drainage Area Map
382- 392	11	Drainage Area Map
393- 395	3	Culvert Layout - Culvert # 6, #7 & #8
396- 397	2	Bridge Class Culvert S1 & S2 Extension
398- 399	2	Bridge Class Culvert S3 & S4 (IH 35)
400- 401	2	Culvert Extension - W 6 & W7 (Loop 20)
402- 416	15	Hydraulic Data Sheets
417- 427	11	Loop 20 Storm Sewer / Ditch Plan and Profile
428- 428	1	Loop 20 Grand Central Road Storm Sewer / Ditch Plan and Profile
429- 429	1	Loop 20 McPherson Road / Ditch Plan and Profile
430- 445	16	IH 35 Storm Sewer / Ditch Plan and Profile
446- 463	18	Storm Sewer Laterals
464- 464	1	Curb Outlet
465- 465	1	Inlet/Outlet Detail
466- 466	1	Type M (MOD) Manhole with or without Type A Grate Inlet Details
467- 467	1	Type H (MOD) Inlet & Grate Details
468- 470	3	Type ADR and AZR Inlets
471- 471	1	Single Culvert 30 Skew SC-30-A (MOD)
472- 472	1	Single Culvert 30 Skew SC-45-A (MOD)
473- 473	1	Miscellaneous Drainage Details
473A- 473A	1	Precast Concrete Box Culvert - PC-5 (MOD)
		Storm Drainage Standards
474- 474	1	* Type A, AD, & AAD Inlets
475- 475	1	* Curb Inlet Type C and Extension Type E (IL-C)
476- 476	1	* Curb Inlet Type C1
477- 477	1	* Storm Sewer Manholes
478- 479	2	* Cross Drainage Safety Pipe Runners - CD-SPR
480- 480	1	* Parallel Drainage Safety Pipe Runners - PD-SPR
481- 482	2	* Excavation and Backfill Diagrams
483- 483A	2	* PSET-RP
484- 484	1	* Precast Safety End Treatment - PSET-SP
485- 485	1	* Lengthening Details - SCL
486- 486	1	* Parallel Wingwall Normal - MCW-P
487- 487	1	* Parallel Wingwall 30 Skew - MCW-P- 30
488- 488	1	* Parallel Wingwall 30 Skew -PW-30
489- 489	1	* Parallel Wingwall for Multiple Box Culverts - MCW-P-45
490- 492	3	* Multiple Box Culverts MC-5-2, MC-6-2(MOD), MC-8-2
493- 493	1	* Single Culvert 30 Skew SC-30 B-C
494- 494	1	* Precast Concrete Box Culvert - PC-5
		Storm Water Pollution Prevention Plan (SW3P) Plan
495- 495	1	General Storm Water Pollution Prevention (SW3P) Plan
496- 504	9	Storm Water Pollution Prevention Plan (SW3P) Plan
		SW3P Standards
505- 511	7	* Temporary Erosion Sediment and Water Pollution Control Measures - EC (1, 2, 3, 4,5,6 & 7) - 93
		VOLUME II
		Bridge Plans
512- 512	1	Key Plan Bridges
513- 522	10	Direct Connector #1 Bridge Layouts
522A- 522C	3	Direct Connector #1 Gore Details
523- 523	1	Direct Connector #1 Estimated Quantities and Bearing Seat Elevations
524- 527	4	Direct Connector #1 Soil Borings
528- 532	5	Direct Connector #1 Foundation Plan
533- 540	8	Direct Connector #1 Footing Details
541- 542	2	Direct Connector #1 Abutment Details
543- 578	36	Direct Connector #1 Bent Details
579- 588	10	Direct Connector #1 Concrete Units- Spans 1 - 13
589- 600	12	Direct Connector #1 Steel Units - Spans 14 - 22
601- 606	6	Direct Connector #1 Concrete Units - Spans 23 - 30
607- 609	3	Direct Connector #1 Slab Details
610- 618	9	Direct Connector #2 Bridge Layouts
618A- 618C	3	Direct Connector #2 Gore Details
619- 619	1	Direct Connector #2 Estimated Quantities and Bearing Seat Elevations
620- 623	4	Direct Connector #2 Soil Borings
624- 628	5	Direct Connector #2 Foundation Plan
629- 635	7	Direct Connector #2 Footing Details
636- 637	2	Direct Connector #2 Abutment Details
638- 678	41	Direct Connector #2 Bent Details
679- 688	10	Direct Connector #2 Concrete Units- Spans 1 - 11
689- 700	12	Direct Connector #2 Steel Units - Spans 12 - 19
701- 708	8	Direct Connector #2 Concrete Units - Spans 20 - 29
709- 711	3	Direct Connector #2 Slab Details
712- 712	1	Direct Connectors #1 & #2 Prestressed Concrete I-Beams (Non-Standard Spans) - IBNS
713- 721	9	Typical Details Direct Connectors #1& #2 Architectural Treatment Reinf. Details
722- 723	2	Typical Plate Girder Details
724- 724	1	Field Splice Details Bolted Alternate
725- 725	1	Elastomeric Bearing Details
726- 727	2	Modular Expansion Joint Details
728- 729	2	Southbound IH 35 Mainlanes at Loop 20 Bridge Layouts
730- 730	1	Southbound IH 35 Mainlanes at Loop 20 Estimated Quantities and Bearing Seat Elevations
731- 731	1	Southbound IH 35 Mainlanes at Loop 20 Soil Borings
732- 734	3	Southbound IH 35 Mainlanes at Loop 20 Abutment Details
735- 738	4	Southbound IH 35 Mainlanes at Loop 20 Bent Details
739- 739	1	Southbound IH 35 Mainlanes at Loop 20 Drill Shaft Details
740- 743	4	Southbound IH 35 Mainlanes at Loop 20 Concrete Units
744- 745	2	Northbound IH 35 Mainlanes at Loop 20 Bridge Layouts
746- 746	1	Northbound IH 35 Mainlanes at Loop 20 Estimated Quantities and Bearing Seat Elevations
747- 749	3	Northbound IH 35 Mainlanes at Loop 20 Abutment Details

SEE REVISION
REV. 6-25-99

STATE OF TEXAS — CHARLES M. SHINE — 62999 — REGISTERED PROFESSIONAL ENGINEER

The seal appearing on this document was authorized by Charles Shine P.E. 62999, on June 3, 1999

DATE	BY	REV	REVISION
6/03/99	DV	01	NEW DRAWINGS

© 1999 Texas Department of Transportation

Brown & Root
HOUSTON, TEXAS

IH 35

INDEX OF SHEETS

SHEET 1 OF 2

FED RD DIV NO	STATE PROJECT NO	SHEET NO
6	NH-99(462)	2

STATE	STATE DIST NO		COUNTY
TEXAS	22		WEBB
CONT	SECT	JOB	HIGHWAY NO
0018	06	131	IH 35

2035XG... GN-12 06-03-99 BAR_HO_ES05 \HCIVIL\CF0039\PHASE2

Drawing List for Loop 20/IH 35 Project

Sheet #'s	# Sheets	Description
		VOLUME I
1- 1	1	**Title Sheet**
2- 3	2	**Index of Sheets**
4- 4	1	**Project Layout and Benchmark Location Map**
5- 8	4	**Benchmark Descriptions**
9- 27	19	**Typical Sections**
28- 37A	11	**Basis of Estimate**
38- 38C1	1	**General Notes and Specifications Data**
39- 39G	1	**Estimate & Quantity**
		Summary Sheets
40- 41	2	Summary of Traffic Control Plan Quantities
42- 50	9	Summary of Roadway Quantities
51- 51	1	Summary of Roadway Quantities - Removal — 51A QUANTITIES & DETAILS; 51B SUMMARY SHT LOOP 20/MCPH.
52- 57	6	Summary of Storm Sewer System Quantities
58- 60	3	Summary of Inlets and Manholes Quantities
61- 61	1	Omitted
62- 62	1	Summary of SW3P Quantities
63- 64	2	Summary of Culvert Quantities Bridge Class Culvert and Misc. Culverts
65- 65	1	Summary of Removal of Existing Drainage Structures Quantities and Curb Outlets
66- 66	1	Summary of Retaining Wall Quantities
67- 67	1	Summary of Bridge Quantities — 67A SUMMARY OF BRIDGE QUANTITIES
68- 69	2	Summary of Signing Quantities
70- 71	2	Summary of Pavement Marking Quantities
72- 73	2	Summary of Traffic Management Quantities
74- 74	1	Summary of Traffic Signal Quantities
75- 76	2	Summary of Illumination Quantities
77- 77	1	Summary of Landscaping Quantities
		Traffic Control Plans/Details
78- 78	1	Loop 20 / IH 35 Traffic Control Plan General Notes
79- 80	2	Sequence of Construction Description
81- 81	1	Traffic Control Plan Advanced Signing Layout
82- 83	2	Traffic Control Plan Construction Sign Details
84- 84	1	Loop 20 TCP Detour Horizontal Alignment Data
85- 86	2	IH 35 TCP Detour Horizontal Alignment Data
87- 89	3	Loop 20 Detour Plan & Profile 3464RR, 20W1A,20W3A
90- 94	5	IH 35 Detour Plan & Profile 35S1B, 35N1A, 35N1B, 35RR, 35S1D
95- 95	1	Loop 20 Overall Construction Plan Phase I
96- 96	1	IH 35 Overall Construction Plan Phase I
97- 97	1	Loop 20 TCP Typical Sections Phase I
98- 98	1	IH 35 TCP Typical Sections Phase I
99- 110	12	Loop 20 Traffic Control Plans - Phase I
111- 112	2	McPherson Road Traffic Control Plan Phase I
113- 121	9	IH 35 Traffic Control Plans - Phase I
122- 122	1	Loop 20 Overall Construction Plan Phase IA
123- 123	1	IH 35 Overall Construction Plan Phase IA
124- 124	1	Loop 20 TCP Typical Sections Phase IA
125- 125	1	IH 35 TCP Typical Sections Phase IA
126- 130	5	Loop 20 Traffic Control Plans - Phase IA
131- 139	9	IH 35 Traffic Control Plans - Phase IA
140- 140	1	Loop 20 Overall Construction Plan Phase II
141- 141	1	IH 35 Overall Construction Plan Phase II
142- 142	1	IH 35 TCP Typical Sections Phase II
143- 150	8	Loop 20 Traffic Control Plans - Phase II
151- 159	9	IH 35 Traffic Control Plans - Phase II
160- 160	1	Loop 20 Overall Construction Plan Phase IIA
161- 161	1	IH 35 Overall Construction Plan Phase IIA
162- 163	2	Loop 20 Traffic Control Plans - Phase IIA
164- 165	2	IH 35 Traffic Control Plans - Phase IIA
166- 166	1	Loop 20 Overall Construction Plan Phase III
167- 167	1	IH 35 Overall Construction Plan Phase III
168- 168	1	Loop 20 TCP Typical Sections Phase III
169- 180	12	Loop 20 Traffic Control Plans - Phase III
181- 189	9	IH 35 Traffic Control Plans - Phase III
190- 190	1	Loop 20 Overall Construction Plan Phase IV
191- 191	1	IH 35 Overall Construction Plan Phase IV
192- 192	1	IH 35 TCP Typical Sections Phase IV
193- 199	7	Loop 20 Traffic Control Plans - Phase IV
200- 204	5	McPherson Road Traffic Control Plans - Phase IV
205- 206	2	McPherson Road Traffic Control Plans - Phase IV Traffic Switch — 206A TEMP TRAFFIC SIGNAL
207- 215	9	IH 35 Traffic Control Plans - Phase IV
216- 216	1	Uniroyal Road TCP Detour Horizontal Alignment Data
217- 217	1	Uniroyal Road Traffic Control Plans Detour Details
218- 229	12	Uniroyal Road Traffic Control Plans (Phase I, IA, II, III, IIIA, IV, V, VI)
229A-229F	6	Temporary Traffic Signal Details
		Traffic Control Standards
230- 241	12	●Barricade and Construction Standards BC (1) thru (9C) - 98
242- 242	1	●Work Zone Channelizing Devices on Flexible Supports WZ (CD) - 94
243- 243	1	●Special Public Information Sign WZ (SPIS) - 98
244- 244	1	●Traffic Control Plan TCP (NOTES) - 98
245- 245	1	●Traffic Control Plan TCP (2-5) - 98
		Geometric Data
246- 250	5	Horizontal Alignment Layouts
251- 257	7	Geometric Data Summary
		Roadway Plan/Profiles/Details
258- 259	2	Loop 20 Mainlane Plan & Profile
260- 269	10	Loop 20 Westbound Frontage Road Plan & Profile
270- 277	8	Loop 20 Eastbound Frontage Road Plan & Profile
278- 284	7	IH 35 Plan & Profile
285- 290	6	IH 35 Northbound Frontage Road Plan & Profile
291- 304	14	IH 35 Southbound Frontage Road Plan & Profile — 291A SB FRT RD TEMP DETOUR
305- 311	7	Direct Connector #1 Plan & Profile
312- 318	7	Direct Connector #2 Plan & Profile
319- 329	11	Ramps A, B, C, D, E, F, H, K, M, P — 329A KILLAM RAMP
330- 330	1	Grand Central Rd Plan & Profile
331- 332	2	McPherson Plan & Profile
333- 333	1	Uniroyal Road Plan & Profile
334- 335	2	Loop 20 and IH 35 Intersection Layout
335A-335A	1	Grand Central Rd Intersection Layout
336- 336	1	McPherson Intersection Layout
337- 338	2	Loop 20 and IH 35 Contour Grading Plan
339- 339	1	McPherson Road Contour Grading Plan
340- 342	3	Loop 20 Grading Plan
342A-342A	1	Loop 20 Embankment Plan
343- 343	1	Uniroyal Road Intersection Grading Plan
344- 344	1	Loop 20 Grand Central Road Construction Easement Plan
345- 345	1	Loop 20 Direct Connector Contour Grading Plan
346- 349	4	IH 35 Super Elevation Transition Details
350- 350	1	Loop 20 Eastbound and Westbound Mainlane Superelevation Diagrams
351- 351	1	IH 35 Northbound and Southbound Mainlane Superelevation Diagrams
352- 352	1	Direct Connector #1 and Direct Connector # 2 Superelevation Diagrams
353- 361	9	Removal Layout
362- 362	1	IH 35 Underdrain System Layout
363- 363	1	Pedstrian Rail Type PR1 (MOD)
		Roadway Standards - Laredo District
364- 366	3	Continuously & Jointed Reinforced Concr Pavmt Details-Wide Flange Terminal Anchorage Systems
367- 367	1	Fast Track Continously Reinforced Concrete Pavement - CRCP-(FS)-92
368- 368	1	Concrete Pavement Junctures
369- 369	1	Wheelchair Ramp and Sidewalk Details
		Roadway Standards - State
370- 370	1	●Concrete Pavement Details CPCR (1)-94
371- 371	1	●Concrete Curb and Gutter CCCG-95
372- 373	2	●Single Slope Traffic Rail Type SSTR
374- 374	1	●Single Slope Concrete Barrier Type 2 SSCB (2)-99
375- 375	1	●Metal Geam Guard Fence MBGF-94
376- 377	2	●Single Guardrail Terminal SGT (5 & 6) -97
378- 379	2	●Reusable Energy Absorbing Crash Terminal - Narrow React 350 - REACT(N)-99
380- 380	1	●Chain Link Barrier Fence CLF-96
380A-380A	1	●Depressed Shoulder Texturing ST(1)-96
		Drainage Plans/Details
381- 381	1	Offsite Drainage Area Map
382- 392	11	Drainage Area Map
393- 395	3	Culvert Layout - Culvert # 6, #7 & #8
396- 397	2	Bridge Class Culvert S1 & S2 Extension
398- 399	2	Bridge Class Culvert S3 & S4 (IH 35)
400- 401	2	Culvert Extension - W 6 & W7 (Loop 20)
402- 416	15	Hydraulic Data Sheets
417- 427	11	Loop 20 Storm Sewer / Ditch Plan and Profile
428- 428	1	Loop 20 Grand Central Road Storm Sewer / Ditch Plan and Profile
429- 429	1	Loop 20 McPherson Road / Ditch Plan and Profile
430- 445	16	IH 35 Storm Sewer / Ditch Plan and Profile
446- 463	18	Storm Sewer Laterals
464- 464	1	Curb Outlet
465- 465	1	Inlet/Outlet Detail
466- 466	1	Type M (MOD) Manhole with or without Type A Grate Inlet Details
467- 467	1	Type H (MOD) Inlet & Grate Details
468- 470	3	Type ADR and AZR Inlets
471- 471	1	Single Culvert 30 Skew SC-30-A (MOD)
472- 472	1	Single Culvert 30 Skew SC-45-A (MOD)
473- 473	1	Miscellaneous Drainage Details
473A-473A	1	Precast Concrete Box Culvert - PC-5 (MOD)
		Storm Drainage Standards
474- 474	1	●Type A , AD, & AAD Inlets
475- 475	1	●Curb Inlet Type C and Extension Type E (IL-C)
476- 476	1	●Curb Inlet Type C1
477- 477	1	●Storm Sewer Manholes
478- 479	2	●Cross Drainage Safety Pipe Runners - CD-SPR
480- 480	1	●Parallel Drainage Safety Pipe Runners - PD-SPR
481- 482	2	●Excavation and Backfill Diagrams
483- 483A	2	●PSET-RP
484- 484	1	●Precast Safety End Treatment - PSET-SP
485- 485	1	●Lengthening Details - SCL
486- 486	1	●Parallel Wingwall Normal - MCW-P
487- 487	1	●Parallel Wingwall 30 Skew - MCW-P- 30
488- 488	1	●Parallel Wingwall 30 Skew -PW-30
489- 489	1	●Parallel Wingwall for Multiple Box Culverts - MCW-P-45
490- 492	3	●Multiple Box Culverts MC-5-2, MC-6-2(MOD), MC-8-2
493- 493	1	●Single Culvert 30 Skew SC-30 B-C
494- 494	1	●Precast Concrete Box Culvert - PC-5
		Storm Water Pollution Prevention Plan (SW3P) Plan
495- 495	1	General Storm Water Pollution Prevention (SW3P) Plan
496- 504	9	Storm Water Pollution Prevention Plan (SW3P) Plan
		SW3P Standards
505- 511	7	●Temporary Erosion Sediment and Water Pollution Control Measures - EC (1, 2, 3, 4,5,6 & 7) - 93
		VOLUME II
		Bridge Plans
512- 512	1	Key Plan Bridges
513- 522	10	Direct Connector #1 Bridge Layouts
522A-522C	3	Direct Connector #1 Gore Details
523- 523	1	Direct Connector #1 Estimated Quantities and Bearing Seat Elevations
524- 527	4	Direct Connector #1 Soil Borings
528- 532	5	Direct Connector #1 Foundation Plan
533- 540	8	Direct Connector #1 Footing Details
541- 542	2	Direct Connector #1 Abutment Details
543- 578	36	Direct Connector #1 Bent Details
579- 588	10	Direct Connector #1 Concrete Units- Spans 1 - 13
589- 600	12	Direct Connector #1 Steel Units - Spans 14 - 22
601- 606	6	Direct Connector #1 Concrete Units - Spans 23 - 30
607- 609	3	Direct Connector #1 Slab Details
610- 618	9	Direct Connector #2 Bridge Layouts
618A-618C	3	Direct Connector #2 Gore Details
619- 619	1	Direct Connector #2 Estimated Quantities and Bearing Seat Elevations
620- 623	4	Direct Connector #2 Soil Borings
624- 628	5	Direct Connector #2 Foundation Plan
629- 635	7	Direct Connector #2 Footing Details
636- 637	2	Direct Connector #2 Abutment Details
638- 678	41	Direct Connector #2 Bent Details
679- 688	10	Direct Connector #2 Concrete Units- Spans 1 - 11
689- 700	12	Direct Connector #2 Steel Units - Spans 12 - 19
701- 708	8	Direct Connector #2 Concrete Units - Spans 20 - 29
709- 711	3	Direct Connector #2 Slab Details
712- 712	1	Direct Connectors #1 & #2 Prestressed Concrete I-Beams (Non-Standard Spans) - IBNS
713- 721	9	Typical Details Direct Connectors #1& #2 Architectural Treatment Reinf. Details
722- 723	2	Typical Plate Girder Details
724- 724	1	Field Splice Details Bolted Alternate
725- 725	1	Elastomeric Bearing Details
726- 727	2	Modular Expansion Joint Details
728- 729	2	Southbound IH 35 Mainlanes at Loop 20 Bridge Layouts
730- 730	1	Southbound IH 35 Mainlanes at Loop 20 Estimated Quantities and Bearing Seat Elevations
731- 731	1	Southbound IH 35 Mainlanes at Loop 20 Soil Borings
732- 734	3	Southbound IH 35 Mainlanes at Loop 20 Abutment Details
735- 738	4	Southbound IH 35 Mainlanes at Loop 20 Bent Details
739- 739	1	Southbound IH 35 Mainlanes at Loop 20 Drill Shaft Details
740- 743	4	Southbound IH 35 Mainlanes at Loop 20 Concrete Units
744- 745	2	Northbound IH 35 Mainlanes at Loop 20 Bridge Layouts
746- 746	1	Northbound IH 35 Mainlanes at Loop 20 Estimated Quantities and Bearing Seat Elevations
747- 749	3	Northbound IH 35 Mainlanes at Loop 20 Abutment Details

STATE OF TEXAS
CHARLES M. SHINE
62999
REGISTERED PROFESSIONAL ENGINEER

The seal appearing on this document was authorized by Charles Shine P.E. 62999, on September 30, 1999.

DATE	BY	REV	REVISION
6/03/99	DV	01	NEW DRAWINGS
9/29/99	RS	02	DRAWINGS OMITTED

© 1999 Texas Department of Transportation

Brown & Root
HOUSTON, TEXAS

IH 35

INDEX OF SHEETS

SHEET 1 OF 2

FED RD DIV NO	STATE PROJECT NO		SHEET NO
6	NH-99(462)		2
STATE	STATE DIST NO	COUNTY	
TEXAS	22	WEBB	
CONT	SECT	JOB	HIGHWAY NO
0018	06	131	IH 35

D03ISX01.DGN-13 09-29-99 BAR_HO_ES05 \HCIVIL\CF0039\PHASE2

Drawing List for Loop 20/IH 35 Project

Sheet #'s	# Sheets	Description
750- 753	4	Northbound IH 35 Mainlanes at Loop 20 Bent Details
754- 754	1	Northbound IH 35 Mainlanes at Loop 20 Drill Shaft Details
755- 758	4	Northbound IH 35 Mainlanes at Loop 20 Concrete Units
759- 759	1	Southbound & Northbound IH 35 Mainlanes at Loop 20 Prestressed Concrete Beams (Non-Standard Spans) - IBNS
760- 760	1	Temporary Overpass @ Loop 20 EB FRTG RD Bridge Layouts
761- 761	1	Temporary Overpass @ Loop 20 EB FRTG RD Typical Sections for Construction
762- 762	1	Temporary Overpass @ Loop 20 EB FRTG RD Estimated Quantities and Bearing Seat Elevations
763- 764	2	Temporary Overpass @ Loop 20 EB FRTG RD Abutment Details
765- 765	1	Temporary Overpass @ Loop 20 EB FRTG RD Bent Details
766- 766	1	Temporary Overpass @ Loop 20 EB FRTG RD Concrete Units
767- 767	1	Temporary Overpass @ Loop 20 EB FRTG RD Prestressed Concrete I-Beams (Non-Standard Spans) - IBNS
768- 768	1	Union Pacific Railroad Underpass at Eastbound Frontage Road
769- 769	1	Union Pacific Railroad Underpass at Westbound Frontage Road
770- 770	1	Estimated Quantities and Bearing Seat Elevations UPRR Underpass at Eastbound Frontage Road
771- 771	1	Estimated Quantities and Bearing Seat Elevations UPRR Underpass at Westbound Frontage Road
772- 776	5	Abutment Nos. 1 and 2 UPRR Underpass at Eastbound and Westbound Frontage Roads
777- 778	2	57.604' Plate Girder Span UPRR Underpass at Eastbound Frontage Road
779- 780	2	69.625' Plate Girder Span UPRR Underpass at Westbound Frontage Road
781- 781	1	Ballast Curb Details for Plate Girder Spans UPRR Underpass at Eastbound and Westbound Frontage Roads
782- 783	2	Waterproffing and Deck Drain Details UPRR Underpass at Eastbound and Westbound Frontage Roads
784- 785	2	Shoe Details UPRR Underpass at Eastbound and Westbound Frontage Roads
786- 786	1	Pedestrian Rail Type PR1 (MOD) UPRR Underpass at Eastbound and Westbound Frontage Roads
787- 787	1	Permanent Metal Deck Forms (Steel) PMDF (S) (MOD) UPRR Underpass at Eastbound and Westbound Frontage Roads
788- 789	2	Minimum Erection and Bracing Requirements MEBR (S) (MOD) UPRR Underpass at Eastbound and Westbound Frontage Roads
790- 790	1	Bridge Protection Assembly (BPA) UPRR Underpass at Eastbound and Westbound Frontage Roads
791- 791	1	Prestressed Concrete I-Beam Details - IBA (MOD)
792- 792	1	Elastometric Bearing and Beam End Details - IBB (MOD)
793- 793	1	Miscellaneous Slab Details for Prestressed I-Beams - IBMS(MOD)
794- 794	1	Thickened Slab End Details for Prestr I-Beam Spans - IBTS(MOD)
795- 797	3	Prestressed Concrete Panels - Optional Deck Details for Prestressed Conc Beam Spans PCP (C)(MOD)
798- 800	3	Omitted
		Bridge Standard Sheets
801- 801	1	•Bridge Protective Assembly with Sign Mount Bracket for Skews Thru 30 Degrees - BPA-1
802- 802	1	•Bridge Protective Assembly with Sign Mount Bracket for Skews Over 30 Degrees - BPA-2
803- 803	1	•Concrete Riprap for Embankment Slopes Under Bridge Ends (Types RR8 & RR9) - CRR
804- 804	1	•Minimum Erection and Bracing Requirements - Prestressed Concr Beam - MEBR (C) -1
805- 805b	2	•Minimum Erection and Bracing Requirements - Steel I-Beams and Plate Girders MEBR (S)
806- 806	1	•Permanent Metal Deck Forms (Concrete) - PMDF (C)
807- 807	1	•Permanent Metal Deck Forms (Steel) - PMDF (S)
808- 808	1	•Sealed Expansion Joint Details - Without Overlay - SEJ-P
809- 809	1	•Single Slope Concrete Barrier - Type 1 (Bridge) - SSCB (1) - 99
810- 810	1	•Bridge Lighting Brackets - BL
		Retaining Wall Layouts
811- 812	2	Loop 20 Retaining Wall "A" & "E"
813- 814	2	Loop 20 Retaining Wall "B" & "F"
815- 816	2	Loop 20 Retaining Wall "C" & "D"
817- 817	1	Loop 20 Retaining Wall "G" & "H"
818- 821	4	IH 35 Retaining Wall "J", "K", "L" & "M"
822- 829	8	Direct Connector #1 Retaining Walls 1 thru 4
830- 835	6	Direct Connector #2 Retaining Walls 5 thru 8
836- 838	3	Temporary Wall Layouts
839- 840	2	Soil Nail Retaining Wall Details
841- 841	1	Cantilever Shaft Retaining Wall
842- 842	1	Miscellaneous Retaining Wall Details
		Retaining Wall Standards - State
843- 843	1	•Mechanically Stabilized Earth Retaining Walls - RW (MSE)
844- 844	1	•Traffic Railing Foundations - RW (TRF)
845- 845	1	•Earthwork Measurement at Retaining Walls - EMRW-94
846- 846	1	•Retaining Walls RW1(H)
847- 847	1	•Retaining Walls Miscellaneous Details RW2
848- 848	1	Omitted
849- 849	1	•Retaining Walls Bill of Reinforcing Steel & Table of Estimated Quantities RW4(HA)1
		Soil Boring Layouts
850- 852	3	
853- 859	7	Soil Boring Profiles
		Signing and Pavement Marking Layouts
860- 873	14	Loop 20 Signing and Pavement Marking Layout
874- 891	18	IH 35 Signing and Pavement Marking Layout
892- 892	1	Grand Central Signing and Pavement Marking Layout
893- 894	2	McPherson Signing and Pavement Marking Layout
895- 895	1	Uniroyal Signing and Pavement Marking Layout
896- 902	7	Summary of Small Signs
903- 904	2	Summary of Large Signs
905- 906	2	Summary of Overhead Signs
907- 918	12	Sign Bridge Details
919-919H	9	Large Sign Details
		Signing and Pavement Marking Standards
920A-920A	1	•Exit Gore and Milepost Signs: IE (1) - 95
920B-920B	1	•Guide Sign Services/Exit Panels: IE (2) - 95
921- 921	1	•Exit Only Panels: IE (4) - 95
922- 922	1	•Additonal Guide Signs: IE (5) - 97
923- 923	1	•Interstate, U.S. & State Route Markers: IM (1) - 95
924- 924	1	•Arrow & Route Marker Attachment Details: IM (2) - 93
925- 925	1	•Interstate Markers - Independent Mounting: IM (3) - 93
926- 926	1	•Interstate Route Marker Auxiliaries: IM (4) - 97
927- 927	1	•Airport, Hospital & Directional Markers For Independent Mounting: IM (5) - 93
928- 929	2	•U.S. & State Route Markers for Independent Mounting: M (1-2) - 95
930- 930	1	•Route Marker Auxiliaries: M (3) - 97
931- 931	1	•Regulatory Signs: R (1) - 98
932- 932	1	•Regulatory Signs: R (2) - 97
933- 933	1	•Regulatory Signs: R (3) - 95
934- 934	1	•Regulatory Signs: R (4) - 98
935- 935	1	•Warning Signs: W (1) - 95
936- 936	1	•Warning Signs: W (2) - 95
937- 937	1	•Warning Signs: W (3) - 95
938- 938	1	•Delineators and Object Markers: D & OM (1) - 95
939- 939	1	•Delineators and Object Markers: D & OM (2) - 95
940- 943	4	•Sign Mounting Details - Small Roadside Signs: SMD (1-1, 1-2, 1-3, 1-4) - 98
944- 944	1	•Sign Mounting Details - Large Roadside Signs Structure: SMD (2-1) - 98
945- 945	1	•Sign Mounting Details - Large Roadside Signs Foundation & Stub: SMD (2-2) - 98
946- 946	1	•Sign Mounting Details - Large Roadside Signs Plywood: SMD (2-3) - 95
947- 947	1	•Sign Mounting Details - Overhead Signs Extruded Aluminum: SMD (2-5) - 95
948- 948	1	•Sign Mounting Details - Type G Support: SMD (TY G) - 97
949- 949	1	•Wind Velocity and Ice Zones: WV & IZ - 96
950- 950	1	•Overhead Sign Bridge Details: OSB - Z4
951- 951	1	•High Level Overhead Sign Bridge Details: HOSB - Z4
952- 952	1	•Overhead Sign Bridge Tower Details: OSBT
953- 953	1	•Overhead Sign Bridge Truss Details: OSBC
954- 954	1	•Foundation Embedment Selection Chart: OSB - FD
955- 955	1	•Cantilever Overhead Sign Supports - COSS-Z1
956- 956	1	•Cantilever Overhead Sign Support Details - COSS1
957- 957	1	•Cantilever Overhead Sign Support Foundation - COSSF
958- 958	1	•Foundation Embedment Selection Charts - COSS - FD
959- 959	1	•Raised Pavement Markers, Reflective Pavement Markers, Traffic Buttons & Jiggle Bar Tile: RPM(1) - 92
960- 960	1	•Typical Standard Pavement Markings: PM(1) - 95
961- 961	1	•Typical Standard Pavement Markings with Raised Pavement Markers: PM(2) - 92
962- 962	1	•Typical Standard Freeway Pavement Markings with Raised Pavement Markers: FPM(1) - 92
963- 963	1	•Typical Standard Freeway Pavement Entrance and Exit Ramps: FPM(2) - 95
964- 964	1	•Typical Standard Freeway Pavement Lane Drop (Exit Only) Exit Ramps: FPM(3) - 92
965- 965	1	•Typical Standard Freeway Pavement Lane Drop (Exit Only) Details: FPM(4) - 92
		Traffic Management System Plans
966- 978	13	IH35 / Loop 20 Traffic Management System Conduit Layout
		Traffic Management System Details
979- 979	1	Computerized Transportation Management System Installation Layout - Communications Hub Building
980- 980	1	Computerized Transportation Management System Cabinet Details - Type 3 Cabinet
981- 981	1	Environmentally Controlled Communications Hub - Building Layout
982- 982	1	Environmentally Controlled Communications Hub - Equipment Layout
983- 983	1	Computerized Transportation Management Installation Details - Manhole (Complete)(Junction Box)(Ty A)
984- 984	1	Computerized Transportation Management System Installation Details - Trench Details
985- 985A	2	Conduit Encased Loops (Sheets 1 & 2)
986- 986	1	Data Collection Center Drop/Insert Muldem Assignments
987- 987	1	Typical Communication Hub Drop/Insert Muldem Assignments
988- 988	1	Drop/Insert Hub Channel Assignments
989- 990	2	Fiber Optic Cable Hub Terminator Assignments (Single Mode)
991- 991	1	Lane Control Signal Details
991A-991B	2	Camera Pole Structure Details (Sheets 1 & 2)
		Traffic Signal Layouts
992- 992	1	Electrical Service Data
993- 994	2	Summary of Sign
995- 995	1	Cable and Conduit Summary - Loop 20 @ IH 35 West Frontage Road
996- 996	1	Cable and Conduit Summary - Loop 20 @ IH 35 East Frontage Road
997- 997	1	Cable and Conduit Summary - Loop 20 @ McPherson Road
998- 998	1	Existing Condition Layout - Loop 20 @ IH 35 West Frontage Road
999- 999	1	Existing Condition Layout - Loop 20 @ IH 35 East Frontage Road
1000- 1000	1	Existing Condition Layout - Loop 20 @ McPherson Road
1001- 1001	1	Signal Layout- Loop 20 @ IH 35 West Frontage Road
1002- 1002	1	Signal Layout - Loop 20 @ IH 35 East Frontage Road
1003- 1003	1	Notes for Signal Layout - Loop 20 @ IH 35 West Frontage Road
1004- 1004	1	Notes for Signal Layout - Loop 20 @ IH 35 East Frontage Road
1005- 1005	1	Signal Layout - Loop 20 @ McPherson Road
1006- 1006	1	Notes for Signal Layout - Loop 20 @ McPherson Road
1007- 1007	1	Signing Layout - Loop 20 @ IH 35 West Frontage Road
1008- 1008	1	Signing Layout - Loop 20 @ IH 35 East Frontage Road
1009- 1009	1	Signing Layout - Loop 20 @ McPherson Road
1010- 1011	2	Proposed Wiring - Loop 20 @ IH 35 West Frontage Road
1012- 1013	2	Proposed Wiring - Loop 20 @ IH 35 East Frontage Road
1014- 1016	3	Proposed Wiring - Loop 20 @ McPherson Road
1017- 1017	1	Street Name Sign Details
		Traffic Signal Details
1018- 1018	1	Traffic Signal Support Structures - Single Mast Arm Assembly - SMA-80(1)-96
1019- 1019	1	Traffic Signal Support Structures - Dual Mast Arm Assembly - DMA-80(3)-96
		Traffic Signal Standards
1020- 1021	2	•Traffic Signal Installation Typical Details - WZ (BTS-1&2)-98
1022- 1022	1	•Traffic Signal Support Structures -Single Mast Arm Assembly - SMA -80(2) -96
1023- 1024	2	•Traffic Signal Support Structures -Dual Mast Arm Assembly - DMA -80(1 thru 2) -96
1025- 1026	2	Standard Assembly for Traffic Signal Support Structures - Mast Arm Connection MA -C-96 and MA-C(ILSN)- •96
1027- 1031	5	•Electrical Details ED (1,2,3,4 & 7)-98
1032- 1032	1	•Street Name Sign Details (Illuminated) SNS - 95
1033- 1033	1	•Pedestrian Pole Details
1034- 1034	1	•Additional Guide Signs IE(5)-97
1035- 1035	1	•Regulatory Signs R(2)-97
1036- 1036	1	•Traffic Signal Support Structures - Mast Arm Pole Details MA-D-96
1037- 1037	1	•Traffic Signal Pole Foundation TS-FD-96
1038- 1038	1	•Standard Assembly Drawings for Luminaire Support Structures - Arm Details LUM-A-96
1039- 1039	1	•Controller Foundation Details
		Illumination Layouts
1040- 1049	10	Roadway Lighting Layout
1050 1050	1	Roadway Lighting Conduit & Conductor Runs
1051- 1051	1	Electrical Service Data
		Illumination Layout Standards
1052- 1052	1	•Electrical Details - Service Support Types SF & SP: ED (5) - 98
1053- 1053	1	•Electrical Details - Service Support Types GC and OC: ED (9) - 98
1054- 1055	2	•High Mast Illumination Poles 30M - 100' - 150' - 175': HMIP (1 - 2) - 98
1056- 1056	1	•High Mast Illumination Details: HMID (2) - 96
1057- 1058	2	•High Mast Illumination Pole Foundations: HMIF (1 - 2) - 98
1059- 1062	4	•Roadway Illumination Details: RID (1 - 4) 98
		Railroad Exhibits
1063- 1063	1	Railroad Crossing Information Overall Layout
1064- 1066	3	Railroad Crossing Information Railroad Underpass - Shoo-fly And Bridge Layouts
1067- 1068	2	Railroad Crossing Information Install Temporary Grade
1069- 1071	3	Railroad Crossing Information Storm Sewer Crossing
1072- 1072	1	Railroad Crossing Information Traffic Management
		Landscaping Plans and Misc. Details
1073- 1103	31	Landscaping Layouts/Details (Plans inserted by TxDOT)
1104- 1104	1	Special Provision Schedule of Liquidated Damages/Incentive Bonus (DC 1 Layout)

• The Standard Drawings listed above have been issued by me and are applicable to this project.

A. A. Abugattas, P.E.

SEE REVISION

STATE OF TEXAS
A. A. ABUGATTAS
34940
REGISTERED PROFESSIONAL ENGINEER

The seal appearing on this document was authorized by A. A. Abugattas, P.E. 34940, on April 16, 1999.

DATE	BY	REV	REVISION

© 1999 Texas Department of Transportation

Brown & Root
HOUSTON, TEXAS

IH 35

INDEX OF SHEETS

SHEET 2 OF 2

FED RD DIV NO	STATE PROJECT NO		SHEET NO
6	NH-99(462)		3
STATE	STATE DIST NO	COUNTY	
TEXAS	22	WEBB	
CONT	SECT	JOB	HIGHWAY NO
0018	06	131	IH 35

D03SX02.DGN-08 04-16-99 BAR_HO_ES05 \HCIVIL\CF0039\PHASE2

Drawing List for Loop 20/IH 35 Project

Sheet #'s	# Sheets	Description
750- 753	4	Northbound IH 35 Mainlanes at Loop 20 Bent Details
754- 754	1	Northbound IH 35 Mainlanes at Loop 20 Drill Shaft Details
755- 758	4	Northbound IH 35 Mainlanes at Loop 20 Concrete Units
759- 759	1	Southbound & Northbound IH 35 Mainlanes at Loop 20 Prestressed Concrete Beams (Non-Standard Spans) - IBNS
760- 760	1	Temporary Overpass @ Loop 20 EB FRTG RD Bridge Layouts
761- 761	1	Temporary Overpass @ Loop 20 EB FRTG RD Typical Sections for Construction
762- 762	1	Temporary Overpass @ Loop 20 EB FRTG RD Estimated Quantities and Bearing Seat Elevations
763- 764	2	Temporary Overpass @ Loop 20 EB FRTG RD Abutment Details
765- 765	1	Temporary Overpass @ Loop 20 EB FRTG RD Bent Details
766- 766	1	Temporary Overpass @ Loop 20 EB FRTG RD Concrete Units
767- 767	1	Temporary Overpass @ Loop 20 EB FRTG RD Prestressed Concrete I-Beams (Non-Standard Spans) - IBNS
768- 768	1	Union Pacific Railroad Underpass at Eastbound Frontage Road
769- 769	1	Union Pacific Railroad Underpass at Westbound Frontage Road
770- 770	1	Estimated Quantities and Bearing Seat Elevations UPRR Underpass at Eastbound Frontage Road
771- 771	1	Estimated Quantities and Bearing Seat Elevations UPRR Underpass at Westbound Frontage Road
772- 776	5	Abutment Nos. 1 and 2 UPRR Underpass at Eastbound and Westbound Frontage Roads
777- 778	2	57.604' Plate Girder Span UPRR Underpass at Eastbound Frontage Road
779- 780	2	69.625' Plate Girder Span UPRR Underpass at Westbound Frontage Road
781- 781	1	Ballast Curb Details for Plate Girder Spans UPRR Underpass at Eastbound and Westbound Frontage Roads
782-783 782A	2	Waterproffing and Deck Drain Details UPRR Underpass at Eastbound and Westbound Frontage Roads ← 782 PLATE GIRDER DETAILS
784- 785	2	Shoe Details UPRR Underpass at Eastbound and Westbound Frontage Roads
786- 786	1	Pedestrian Rail Type PR1 (MOD) UPRR Underpass at Eastbound and Westbound Frontage Roads
787- 787	1	Permanent Metal Deck Forms (Steel) PMDF (S) (MOD) UPRR Underpass at Eastbound and Westbound Frontage Roads
788- 789	2	Minimum Erection and Bracing Requirements MEBR (S) (MOD) UPRR Underpass at Eastbound and Westbound Frontage Roads
790- 790	1	Bridge Protection Assembly (BPA) UPRR Underpass at Eastbound and Westbound Frontage Roads
791- 791	1	Prestressed Concrete I-Beam Details - IBA (MOD)
792- 792	1	Elastometric Bearing and Beam End Details - IBB (MOD)
793- 793	1	Miscellaneous Slab Details for Prestressed I-Beams - IBMS(MOD)
794- 794	1	Thickened Slab End Details for Prestr I-Beam Spans - IBTS(MOD)
795- 797	3	Prestressed Concrete Panels - Optional Deck Details for Prestressed Conc Beam Spans PCP (C)(MOD)
798- 798		CHAIN LINK BARRIER FENCE - CLF 96 799 - RETAINING WALL CLOSURE DETAILS 800. OMITTED
799-799		
		Bridge Standard Sheets
801- 801	1	•Bridge Protective Assembly with Sign Mount Bracket for Skews Thru 30 Degrees - BPA-1
802- 802	1	•Bridge Protective Assembly with Sign Mount Bracket for Skews Over 30 Degrees - BPA-2
803- 803	1	•Concrete Riprap for Embankment Slopes Under Bridge Ends (Types RR8 & RR9) - CRR
804- 804	1	•Minimum Erection and Bracing Requirements - Prestressed Concr Beam - MEBR (C) -1
805- 805b	2	•Minimum Erection and Bracing Requirements - Steel I-Beams and Plate Girders MEBR (S)
806- 806	1	•Permanent Metal Deck Forms (Concrete) - PMDF (C)
807- 807	1	•Permanent Metal Deck Forms (Steel) - PMDF (S)
808- 808	1	•Sealed Expansion Joint Details - Without Overlay - SEJ-P
809- 809	1	•Single Slope Concrete Barrier - Type 1 (Bridge) - SSCB (1) - 99
810- 810	1	•Bridge Lighting Brackets - BL
		Retaining Wall Layouts
811- 812	2	Loop 20 Retaining Wall "A" & "E"
813- 813	1	Loop 20 Retaining Wall "F"
814- 814	1	Loop 20 Retaining Wall "B"
815- 816	2	Loop 20 Retaining Wall "C" & "D"
817- 817	1	Omitted
818- 821	4	IH 35 Retaining Wall "J", "K", "L" & "M"
822- 829	8	Direct Connector #1 Retaining Walls 1 thru 4
830- 835	6	Direct Connector #2 Retaining Walls 5 thru 8
836- 837	2	> TEMPORARY RETAINING WALL LAYOUT
838- 838	1	
839- 840	2	Soil Nail Retaining Wall Details
841- 841	1	Omitted
842- 842	1	Miscellaneous Retaining Wall Details
		Retaining Wall Standards - State
843- 843	1	•Mechanically Stabilized Earth Retaining Walls - RW (MSE)
844- 844	1	•Traffic Railing Foundations - RW (TRF)
845- 845	1	•Earthwork Measurement at Retaining Walls - EWRW-94
846- 846	1	•Retaining Walls RW1(H)
847- 847	1	•Retaining Walls Miscellaneous Details RW2
848- 848	1	Omitted
849- 849	1	Omitted
		Soil Boring Layouts
850- 852	3	Soil Boring Layouts
853- 859	7	Soil Boring Profiles
		Signing and Pavement Marking Layouts
860- 873	14	Loop 20 Signing and Pavement Marking Layout
874- 891	18	IH 35 Signing and Pavement Marking Layout
892- 892	1	Grand Central Signing and Pavement Marking Layout
893- 894	2	McPherson Signing and Pavement Marking Layout
895- 895	1	Uniroyal Signing and Pavement Marking Layout
896- 902	7	Summary of Small Signs
903- 904	2	Summary of Large Signs
905- 906	2	Summary of Overhead Signs
907- 918A	13	Sign Bridge Details (Omitted 911, 915)
919-919H	9	Large Sign Details
920		OMITTED
		Signing and Pavement Marking Standards
920A-920A	1	•Exit Gore and Milepost Signs: IE (1) - 95
920B-920B	1	•Guide Sign Services/Exit Panels: IE (2) - 95
921- 921	1	•Exit Only Panels: IE (4) - 95
922- 922	1	•Additonal Guide Signs: IE (5) - 97
923- 923	1	•Interstate, U.S. & State Route Markers: IM (1) - 95
924- 924	1	•Arrow & Route Marker Attachment Details: IM (2) - 93
925- 925	1	•Interstate Markers - Independent Mounting: IM (3) - 93
926- 926	1	•Interstate Route Marker Auxiliaries: IM (4) - 97
927- 927	1	•Airport, Hospital & Directional Markers For Independent Mounting: IM (5) - 93
928- 929	2	•U.S. & State Route Markers for Independent Mounting: M (1-2) - 95
930- 930	1	•Route Marker Auxiliaries: M (3) - 97
931- 931	1	•Regulatory Signs: R (1) - 98
932- 932	1	•Regulatory Signs: R (2) - 97
933- 933	1	•Regulatory Signs: R (3) - 95
934- 934	1	•Regulatory Signs: R (4) - 98
935- 935	1	•Warning Signs: W (1) - 95
936- 936	1	•Warning Signs: W (2) - 95
937- 937	1	•Warning Signs: W (3) - 95
938- 938	1	•Delineators and Object Markers: D & OM (1) - 95
939- 939	1	•Delineators and Object Markers: D & OM (2) - 95
940- 943	4	•Sign Mounting Details - Small Roadside Signs: SMD (1-1, 1-2, 1-3, 1-4) - 98
944- 944	1	•Sign Mounting Details - Large Roadside Signs Structure: SMD (2-1) - 98
945- 945	1	•Sign Mounting Details - Large Roadside Signs Foundation & Stub: SMD (2-2) - 98
946- 946	1	•Sign Mounting Details - Large Roadside Signs Plywood: SMD (2-3) - 95
947- 947	1	•Sign Mounting Details - Overhead Signs Extruded Aluminum: SMD (2-5) - 95
948- 948	1	•Sign Mounting Details - Type G Support: SMD (TY G) - 97
949- 949	1	•Wind Velocity and Ice Zones: WV & IZ - 96
950- 950	1	•Overhead Sign Bridge Details: OSB - Z4
951- 951	1	•High Level Overhead Sign Bridge Details: HOSB - Z4
952- 952	1	•Overhead Sign Bridge Tower Details: OSBT
953- 953	1	•Overhead Sign Bridge Truss Details: OSBC
954- 954	1	•Foundation Embedment Selection Chart: OSB - FD
955- 955	1	•Cantilever Overhead Sign Supports - COSS-Z1
956- 956	1	•Cantilever Overhead Sign Support Details - COSSD
957- 957	1	•Cantilever Overhead Sign Support Foundation - COSSF
958- 958	1	•Foundation Embedment Selection Charts - COSS - FD
959- 959	1	•Raised Pavement Markers, Reflective Pavement Markers, Traffic Buttons & Jiggle Bar Tile: RPM(1) - 92
960- 960	1	•Typical Standard Pavement Markings: PM(1) - 95
961- 961	1	•Typical Standard Pavement Markings with Raised Pavement Markers: PM(2) - 92
962- 962	1	•Typical Standard Freeway Pavement Markings with Raised Pavement Markers: FPM(1) - 92
963- 963	1	•Typical Standard Freeway Pavement Entrance and Exit Ramps: FPM(2) - 95
964- 964	1	•Typical Standard Freeway Pavement Lane Drop (Exit Only) Exit Ramps: FPM(3) - 92
965- 965	1	•Typical Standard Freeway Pavement Lane Drop (Exit Only) Details: FPM(4) - 92
		Traffic Management System Plans
966- 978A	15	IH35 / Loop 20 Traffic Management System Conduit Layout
970A		
		Traffic Management System Details
979- 979	1	Computerized Transportation Management System Installation Layout - Communications Hub Building
980- 980	1	Computerized Transportation Management System Cabinet Details - Type 3 Cabinet
981- 981	1	Environmentally Controlled Communications Hub - Building Layout
982- 982	1	Environmentally Controlled Communications Hub - Equipment Layout
983- 983	1	Computerized Transportation Management Installation Details - Manhole (Complete)(Junction Box)(Ty A)
984- 984F	7	Computerized Transportation Management System Installation Details - Trench and Ground Box Details
985- 985	2	Conduit Encased Loops
986- 986	1	Data Collection Center Drop/Insert Muldem Assignments
987- 987	1	Typical Communication Hub Drop/Insert Muldem Assignments
988- 988	1	Drop/Insert Hub Channel Assignments
989- 990	2	Fiber Optic Cable Hub Terminator Assignments (Single Mode)
991- 991	1	Lane Control Signal Details
991A-991C	3	CCTV Camera Pole Structure Details
991D-991N	11	CTMS Standards and Details (991I OMITTED)
		Traffic Signal Layouts
992- 992	1	Electrical Service Data
993- 994	2	Summary of Sign
995- 995	1	Cable and Conduit Summary - Loop 20 @ IH 35 West Frontage Road
996- 996	1	Cable and Conduit Summary - Loop 20 @ IH 35 East Frontage Road
997- 997	1	Cable and Conduit Summary - Loop 20 @ McPherson Road
998- 998	1	Existing Condition Layout - Loop 20 @ IH 35 West Frontage Road
999- 999	1	Existing Condition Layout - Loop 20 @ IH 35 East Frontage Road
1000- 1000	1	Existing Condition Layout - Loop 20 @ McPherson Road
1001- 1001	1	Signal Layout- Loop 20 @ IH 35 West Frontage Road
1002- 1002	1	Signal Layout - Loop 20 @ IH 35 East Frontage Road
1003- 1003	1	Notes for Signal Layout - Loop 20 @ IH 35 West Frontage Road
1004- 1004	1	Notes for Signal Layout - Loop 20 @ IH 35 East Frontage Road
1005- 1005	1	Signal Layout - Loop 20 @ McPherson Road
1006- 1006	1	Notes for Signal Layout - Loop 20 @ McPherson Road
1007- 1007	1	Signing Layout - Loop 20 @ IH 35 West Frontage Road
1008- 1008	1	Signing Layout - Loop 20 @ IH 35 East Frontage Road
1009- 1009	1	Signing Layout - Loop 20 @ McPherson Road
1010- 1011	2	Proposed Wiring - Loop 20 @ IH 35 West Frontage Road
1012- 1013	2	Proposed Wiring - Loop 20 @ IH 35 East Frontage Road
1014- 1016	3	Proposed Wiring - Loop 20 @ McPherson Road
1017- 1017	1	Street Name Sign Details
		Traffic Signal Details
1018- 1018	1	Traffic Signal Support Structures - Single Mast Arm Assembly - SMA-80(1)-96
1019- 1019	1	Traffic Signal Support Structures - Dual Mast Arm Assembly - DMA-80(3)-96
		Traffic Signal Standards
1020- 1021	2	•Traffic Signal Installation Typical Details - WZ (BTS-1&2)-98
1022- 1022	1	•Traffic Signal Support Structures -Single Mast Arm Assembly - SMA -80(2) -96
1023- 1024	2	•Traffic Signal Support Structures -Dual Mast Arm Assembly - DMA -80(1 thru 2) -96
1025- 1026	2	Standard Assembly for Traffic Signal Support Structures - Mast Arm Connection MA -C-96 and MA-C(ILSN)-96
1027- 1031	6	•Electrical Details ED (1,2,3,4, & 7)-98
1032- 1032	1	•Street Name Sign Details (Illuminated) SNS - 95
1033- 1033	1	•Pedestrian Pole Details
1034- 1034	1	•Additional Guide Signs IE(5)-97
1035- 1035	1	•Regulatory Signs R(2)-97
1036- 1036	1	•Traffic Signal Support Structures - Mast Arm Pole Details MA-D-96
1037- 1037	1	•Traffic Signal Pole Foundation TS-FD-96
1038- 1038	1	•Standard Assembly Drawings for Luminaire Support Structures - Arm Details LUM-A-96
1039- 1039	1	•Controller Foundation Details
		Illumination Layouts
1040- 1049	10	Roadway Lighting Layout
1050 1050	1	Roadway Lighting Conduit & Conductor Runs
1051- 1051	1	Electrical Service Data
		Illumination Layout Standards
1052- 1052	1	•Electrical Details - Service Support Types SF & SP: ED (5) - 98
1053- 1053	1	•Electrical Details - Service Support Types GC and OC: ED (9) - 98
1054- 1055	2	•High Mast Illumination Poles 30M - 100' - 150' - 175': HMIP (1 - 2) - 98
1056- 1056	1	•High Mast Illumination Details: HMID (2) - 96
1057- 1058	2	•High Mast Illumination Pole Foundations: HMIF (1 - 2) - 98
1059- 1062	4	•Roadway Illumination Details: RID (1 - 4) 98
		Railroad Exhibits
1063- 1063	1	Railroad Crossing Information Overall Layout
1064- 1067	4	Railroad Crossing Information Railroad Underpass - Shoo-fly And Bridge Layouts
1068- 1068	1	Railroad Crossing Information Install Temporary Grade
1069- 1071E	3	Railroad Crossing Information Storm Sewer Crossing
1072- 1072	1	Railroad Crossing Information Traffic Management
		Landscaping Plans and Misc. Details
1073- 1103	31	Landscaping Layouts/Details (Plans inserted by TxDOT)
1104- 1104	1	Special Provision Schedule of Liquidated Damages/Incentive Bonus (DC 1 Layout)
1105-1106	2	SCHEMATIC LAYOUT & WATER MAIN DETAILS

• The Standard Drawings listed above have been issued by me and are applicable to this project.

Charles M. Shine, P.E.

Charles M. Shine, P.E.

SEE REVISION
REV. 6-25-99

STATE OF TEXAS
CHARLES M. SHINE
62999
REGISTERED PROFESSIONAL ENGINEER

The seal appearing on this document was authorized by Charles Shine P.E. 62999, on June 16, 1999.

DATE	BY	REV	REVISION
6/03/99	DV	01	OMITTED DRAWINGS
6/16/99	DV	02	ADDED & OMITTED DRAWINGS

© 1999 Texas Department of Transportation

Brown & Root
HOUSTON, TEXAS

IH 35

INDEX OF SHEETS

SHEET 2 OF 2

FED RD DIV NO	STATE PROJECT NO	SHEET NO
6	NH-99(462)	3

STATE	STATE DIST NO	COUNTY
TEXAS	22	WEBB

CONT	SECT	JOB	HIGHWAY NO
0018	06	131	IH 35

D03ISX02.DGN-11 06-17-99 BAR_HO_ES05 \HCIVIL\CF0039\PHASE2

Drawing List for Loop 20/IH 35 Project

Sheet #'s	# Sheets	Description
750- 753	4	Northbound IH 35 Mainlanes at Loop 20 Bent Details
754- 754	1	Northbound IH 35 Mainlanes at Loop 20 Drill Shaft Details
755- 758	4	Northbound IH 35 Mainlanes at Loop 20 Concrete Units
759- 759	1	Southbound & Northbound IH 35 Mainlanes at Loop 20 Prestressed Concrete Beams (Non-Standard Spans) - IBNS
760- 760	1	Temporary Overpass @ Loop 20 EB FRTG RD Bridge Layouts
761- 761	1	Temporary Overpass @ Loop 20 EB FRTG RD Typical Sections for Construction
762- 762	1	Temporary Overpass.@ Loop 20 EB FRTG RD Estimated Quantities and Bearing Seat Elevations
763- 764	2	Temporary Overpass @ Loop 20 EB FRTG RD Abutment Details
765- 765	1	Temporary Overpass @ Loop 20 EB FRTG RD Bent Details
766- 766	1	Temporary Overpass @ Loop 20 EB FRTG RD Concrete Units
767- 767	1	Temporary Overpass @ Loop 20 EB FRTG RD Prestressed Concrete I-Beams (Non-Standard Spans) - IBNS
768- 768	1	Union Pacific Railroad Underpass at Eastbound Frontage Road
769- 769	1	Union Pacific Railroad Underpass at Westbound Frontage Road
770- 770	1	Estimated Quantities and Bearing Seat Elevations UPRR Underpass at Eastbound Frontage Road
771- 771	1	Estimated Quantities and Bearing Seat Elevations UPRR Underpass at Westbound Frontage Road
772- 776	5	Abutment Nos. 1 and 2 UPRR Underpass at Eastbound and Westbound Frontage Roads
777- 778	2	57.604' Plate Girder Span UPRR Underpass at Eastbound Frontage Road
779- 780	2	69.625' Plate Girder Span UPRR Underpass at Westbound Frontage Road
781- 781	1	Ballast Curb Details for Plate Girder Spans UPRR Underpass at Eastbound and Westbound Frontage Roads
782- 782	1	Plate Girder Details
783- 783A	2	Waterproffing and Deck Drain Details UPRR Underpass at Eastbound and Westbound Frontage Roads
784- 785	2	Shoe Details UPRR Underpass at Eastbound and Westbound Frontage Roads
786- 786	1	Pedestrian Rail Type PR1 (MOD) UPRR Underpass at Eastbound and Westbound Frontage Roads
787- 787	1	Permanent Metal Deck Forms (Steel) PMDF (S) (MOD) UPRR Underpass at Eastbound and Westbound Frontage Roads
788- 789	2	Minimum Erection and Bracing Requirements MEBR (S) (MOD) UPRR Underpass at Eastbound and Westbound Frontage Roads
790- 790	1	Bridge Protection Assembly (BPA) UPRR Underpass at Eastbound and Westbound Frontage Roads
791- 791	1	Prestressed Concrete I-Beam Details - IBA (MOD)
792- 792	1	Elastometric Bearing and Beam End Details - IBB (MOD)
793- 793	1	Miscellaneous Slab Details for Prestressed I-Beams - IBMS(MOD)
794- 794	1	Thickened Slab End Details for Prestr I-Beam Spans - IBTS(MOD)
795- 797	3	Prestressed Concrete Panels - Optional Deck Details for Prestressed Conc Beam Spans PCP (C)(MOD)
798- 798	1	Chainlink Barrier Fence -CLF 96
799- 799	1	Retaining Wall Closure Details
800- 800	1	Omitted
		Bridge Standard Sheets
801- 801	1	*Bridge Protective Assembly with Sign Mount Bracket for Skews Thru 30 Degrees - BPA-1
802- 802	1	*Bridge Protective Assembly with Sign Mount Bracket for Skews Over 30 Degrees - BPA-2
803- 803	1	*Concrete Riprap for Embankment Slopes Under Bridge Ends (Types RR8 & RR9) - CRR
804- 804	1	*Minimum Erection and Bracing Requirements - Prestressed Concr Beam - MEBR (C) -1
805- 805b	2	*Minimum Erection and Bracing Requirements - Steel I-Beams and Plate Girders MEBR (S)
806- 806	1	*Permanent Metal Deck Forms (Concrete) - PMDF (C)
807- 807	1	*Permanent Metal Deck Forms (Steel) - PMDF (S)
808- 808	1	*Sealed Expansion Joint Details - Without Overlay - SEJ-P
809- 809	1	*Single Slope Concrete Barrier - Type 1 (Bridge) - SSCB (1) - 99
810- 810	1	*Bridge Lighting Brackets - BL
		Retaining Wall Layouts
811- 812	2	Loop 20 Retaining Wall "A" & "E"
813- 813	1	Loop 20 Retaining Wall "F"
814- 814A	1	Loop 20 Retaining Wall "B" & "H"
815- 816	2	Loop 20 Retaining Wall "C" & "D"
817- 817	1	Omitted
818- 821	4	IH 35 Retaining Wall "J", "K", "L" & "M"
822- 829	8	Direct Connector #1 Retaining Walls 1 thru 4
830- 835	6	Direct Connector #2 Retaining Walls 5 thru 8
836- 838	3	Temporary Retaining Wall Layouts
839- 840	2	Soil Nail Retaining Wall Details
841- 841	1	Omitted
842- 842	1	Miscellaneous Retaining Wall Details
		Retaining Wall Standards - State
843- 843	1	*Mechanically Stabilized Earth Retaining Walls - RW (MSE)
844- 844	1	*Traffic Railing Foundations - RW (TRF)
845- 845	1	*Earthwork Measurement at Retaining Walls - EMRW-94
846- 846	1	*Retaining Walls RW1(H)
847- 847	1	*Retaining Walls Miscellaneous Details RW2
848- 848	1	Omitted
849- 849	1	Omitted
		Soil Boring Layouts
850- 852	3	Soil Boring Profiles
853- 859	7	
		Signing and Pavement Marking Layouts
860- 873	14	Loop 20 Signing and Pavement Marking Layout
874- 891	18	IH 35 Signing and Pavement Marking Layout
892- 892	1	Grand Central Signing and Pavement Marking Layout
893- 894	2	McPherson Signing and Pavement Marking Layout
895- 895	1	Uniroyal Signing and Pavement Marking Layout
896- 902	7	Summary of Small Signs
903- 904	2	Summary of Large Signs
905- 906	2	Summary of Overhead Signs
907- 918A	13	Sign Bridge Details (Omitted 911, 915)
919- 919H	9	Large Sign Details
920- 920	1	Omitted
		Signing and Pavement Marking Standards
920A-920A	1	*Exit Gore and Milepost Signs: IE (1) - 95
920B-920B	1	*Guide Sign Services/Exit Panels: IE (2) - 95
921- 921	1	*Exit Only Panels: IE (4) - 95
922- 922	1	*Additonal Guide Signs: IE (5) - 97
923- 923	1	*Interstate, U.S. & State Route Markers: IM (1) - 95
924- 924	1	*Arrow & Route Marker Attachment Details: IM (2) - 93
925- 925	1	*Interstate Markers - Independent Mounting: IM (3) - 93
926- 926	1	*Interstate Route Marker Auxiliaries: IM (4) - 97
927- 927	1	*Airport, Hospital & Directional Markers For Independent Mounting: IM (5) - 93
928- 929	2	*U.S. & State Route Markers for Independent Mounting: M (1-2) - 95
930- 930	1	*Route Marker Auxiliaries: M (3) - 97
931- 931	1	*Regulatory Signs: R (1) - 98
932- 932	1	*Regulatory Signs: R (2) - 97
933- 933	1	*Regulatory Signs: R (3) - 95
934- 934	1	*Regulatory Signs: R (4) - 98
935- 935	1	*Warning Signs: W (1) - 95
936- 936	1	*Warning Signs: W (2) - 95
937- 937	1	*Warning Signs: W (3) - 95
938- 938	1	*Delineators and Object Markers: D & OM (1) - 95
939- 939	1	*Delineators and Object Markers: D & OM (2) - 95
940- 943	4	*Sign Mounting Details - Small Roadside Signs: SMD (1-1, 1-2, 1-3, 1-4) - 98
944- 944	1	*Sign Mounting Details - Large Roadside Signs Structure: SMD (2-1) - 98
945- 945	1	*Sign Mounting Details - Large Roadside Signs Foundation & Stub: SMD (2-2) - 98
946- 946	1	*Sign Mounting Details - Large Roadside Signs Plywood: SMD (2-3) - 95
947- 947	1	*Sign Mounting Details - Overhead Signs Extruded Aluminum: SMD (2-5) - 95
948- 948	1	*Sign Mounting Details - Type G Support: SMD (TY G) - 97
949- 949	1	*Wind Velocity and Ice Zones: WV & IZ - 96
950- 950	1	*Overhead Sign Bridge Details: OSB - Z4
951- 951	1	*High Level Overhead Sign Bridge Details: HOSB - Z4
952- 952	1	*Overhead Sign Bridge Tower Details: OSBT
953- 953	1	*Overhead Sign Bridge Truss Details: OSBC
954- 954	1	*Foundation Embedment Selection Chart: OSB - FD
955- 955	1	*Cantilever Overhead Sign Supports - COSS-Z1
956- 956	1	*Cantilever Overhead Sign Support Details - COSSD
957- 957	1	*Cantilever Overhead Sign Support Foundation - COSSF
958- 958	1	*Foundation Embedment Selection Charts - COSS - FD
959- 959	1	*Raised Pavement Markers, Reflective Pavement Markers, Traffic Buttons & Jiggle Bar Tile: RPM(1) - 92
960- 960	1	*Typical Standard Pavement Markings: PM(1) - 95
961- 961	1	*Typical Standard Pavement Markings with Raised Pavement Markers: PM(2) - 92
962- 962	1	*Typical Standard Freeway Pavement Markings with Raised Pavement Markers: FPM(1) - 92
963- 963	1	*Typical Standard Freeway Pavement Entrance and Exit Ramps: FPM(2) - 95
964- 964	1	*Typical Standard Freeway Pavement Lane Drop (Exit Only) Exit Ramps: FPM(3) - 92
965- 965	1	*Typical Standard Freeway Pavement Lane Drop (Exit Only) Details: FPM(4) - 92
		Traffic Management System Plans
966- 978A	15	IH35 / Loop 20 Traffic Management System Conduit Layout
		Traffic Management System Details
979- 979	1	Computerized Transportation Management System Installation Layout - Communications Hub Building
980- 980	1	Computerized Transportation Management System Cabinet Details - Type 3 Cabinet
981- 981	1	Environmentally Controlled Communications Hub - Building Layout
982- 982	1	Environmentally Controlled Communications Hub - Equipment Layout
983- 983	1	Computerized Transportation Management Installation Details - Manhole (Complete)(Junction Box)(Ty A)
984- 984F	7	Computerized Transportation Management System Installation Details - Trench and Ground Box Details
985- 985A	2	Conduit Encased Loops (Sheets 1 & 2)
986- 986	1	Data Collection Center Drop/Insert Muldem Assignments
987- 987	1	Typical Communication Hub Drop/Insert Muldem Assignments
988- 988	1	Drop/Insert Hub Channel Assignments
989- 990	2	Fiber Optic Cable Hub Terminator Assignments (Single Mode)
991- 991	1	Lane Control Signal Details
991A-991C	3	CCTV Camera Pole Structure Details
991D-991N	11	CTMS Standards and Details (991I Omitted)
		Traffic Signal Layouts
992- 992	1	Electrical Service Data
993- 994	2	Summary of Sign
995- 995	1	Cable and Conduit Summary - Loop 20 @ IH 35 West Frontage Road
996- 996	1	Cable and Conduit Summary - Loop 20 @ IH 35 East Frontage Road
997- 997	1	Cable and Conduit Summary - Loop 20 @ McPherson Road
998- 998	1	Existing Condition Layout - Loop 20 @ IH 35 West Frontage Road
999- 999	1	Existing Condition Layout - Loop 20 @ IH 35 East Frontage Road
1000- 1000	1	Existing Condition Layout - Loop 20 @ McPherson Road
1001- 1001	1	Signal Layout- Loop 20 @ IH 35 West Frontage Road
1002- 1002	1	Signal Layout - Loop 20 @ IH 35 East Frontage Road
1003- 1003	1	Notes for Signal Layout - Loop 20 @ IH 35 West Frontage Road
1004- 1004	1	Notes for Signal Layout - Loop 20 @ IH 35 East Frontage Road
1005- 1005	1	Signal Layout - Loop 20 @ McPherson Road
1006- 1006	1	Notes for Signal Layout - Loop 20 @ McPherson Road
1007- 1007	1	Signing Layout - Loop 20 @ IH 35 West Frontage Road
1008- 1008	1	Signing Layout - Loop 20 @ IH 35 East Frontage Road
1009- 1009	1	Signing Layout - Loop 20 @ McPherson Road
1010- 1011	2	Proposed Wiring - Loop 20 @ IH 35 West Frontage Road
1012- 1013	2	Proposed Wiring - Loop 20 @ IH 35 East Frontage Road
1014- 1016	3	Proposed Wiring - Loop 20 @ McPherson Road
1017- 1017	1	Street Name Sign Details
		Traffic Signal Details
1018- 1018	1	Traffic Signal Support Structures - Single Mast Arm Assembly - SMA-80(1)-96
1019- 1019	1	Traffic Signal Support Structures - Dual Mast Arm Assembly - DMA-80(3)-96
		Traffic Signal Standards
1020- 1021	2	*Traffic Signal Installation Typical Details - WZ (BTS-1&2)-98
1022- 1022	1	*Traffic Signal Support Structures -Single Mast Arm Assembly - SMA -80(2) -96
1023- 1024	2	*Traffic Signal Support Structures -Dual Mast Arm Assembly - DMA -80(1 thru 2) -96
1025- 1026	2	Standard Assembly for Traffic Signal Support Structures - Mast Arm Connection MA -C-96 and MA-C(ILSN)-96
1027- 1031A	6	*Electrical Details ED (1,2,3,4,5 & 7)-98
1032- 1032	1	*Street Name Sign Details (Illuminated) SNS - 95
1033- 1033	1	*Pedestrian Pole Details
1034- 1034	1	*Additional Guide Signs IE(5)-97
1035- 1035	1	*Regulatory Signs R(2)-97
1036- 1036	1	*Traffic Signal Support Structures - Mast Arm Pole Details MA-D-96
1037- 1037	1	*Traffic Signal Pole Foundation TS-FD-96
1038- 1038	1	*Standard Assembly Drawings for Luminaire Support Structures - Arm Details LUM-A-96
1039- 1039	1	*Controller Foundation Details
		Illumination Layouts
1040- 1049	10	Roadway Lighting Layout
1050 1050	1	Roadway Lighting Conduit & Conductor Runs
1051- 1051	1	Electrical Service Data
		Illumination Layout Standards
1052- 1052	1	*Electrical Details - Service Support Types SF & SP: ED (5) - 98
1053- 1053	1	*Electrical Details - Service Support Types GC and OC: ED (9) - 98
1054- 1055	2	*High Mast Illumination Poles 30M - 100' - 150' - 175': HMIP (1 - 2) - 98
1056- 1056	1	*High Mast Illumination Details: HMID (2) - 96
1057- 1058	2	*High Mast Illumination Pole Foundations: HMIF (1 - 2) - 98
1059- 1062	4	*Roadway Illumination Details: RID (1 - 4) 98
		Railroad Exhibits
1063- 1063	1	Railroad Crossing Information Overall Layout
1064- 1067	4	Railroad Crossing Information Railroad Underpass - Shoo-fly And Bridge Layouts
1068- 1068	1	Railroad Crossing Information Install Temporary Grade
1069- 1071E	8	Railroad Crossing Information Storm Sewer Crossing
1072- 1072	1	Railroad Crossing Information Traffic Management
		Landscaping Plans and Misc. Details
1073-1103	31	Landscaping Layouts/Details (Plans inserted by TxDOT)
1104-1104	1	Special Provision Schedule of Liquidated Damages/Incentive Bonus (DC 1 Layout)
1105-1106	2	Schematic Layout & Water Main Details

* **The Standard Drawings listed above have been issued by me and are applicable to this project.**

Charles M. Shine, P.E.

STATE OF TEXAS
CHARLES M. SHINE
62999
REGISTERED PROFESSIONAL ENGINEER

The seal appearing on this document was authorized by Charles Shine P.E. 62999, on September 30, 1999.

DATE	BY	REV	REVISION
6/03/99	DV	01	OMITTED DRAWINGS
6/16/99	DV	02	ADDED & OMITTED DRAWINGS
9/29/99	RS	03	ADDED & OMITTED DRAWINGS

© 1999 Texas Department of Transportation

Brown & Root
HOUSTON, TEXAS

IH 35

INDEX OF SHEETS

SHEET 2 OF 2

FED RD DIV NO	STATE PROJECT NO		SHEET NO
6	NH-99(462)		3
STATE	STATE DIST NO	COUNTY	
TEXAS	22	WEBB	
CONT	SECT	JOB	HIGHWAY NO
0018	06	131	IH 35

D03ISX02.DGN-11 06-17-99 BAR_HO_ES05 \HCIVIL\CF0039\PHASE2

CSJ: 0018-06-131 CHANGE ORDER LIST

NO.	AMOUNT	TIME EXTENSION #	WORKING DAYS ADDED	FHWA PART/NON-PART	CALENDAR DAYS ADDED	REASON CODES			CHANGE ORDER DESCRIPTION
1	$0.00			PARTICIPATING		1B			ROW quantity adjustment
2	$12,478.00			PARTICIPATING		1B			Traffic signal relocate to IH-35
3	$2,317.58			PARTICIPATING		1B			Half cost of partnering session
4	$7,860.00			PARTICIPATING		1B			Install soil retention blankets on temp. bridge
5	$712,780.91			NON-PARTICIPATING		1B	4B		Install water line & force main for City of Laredo
6	$712,780.91			NON-PARTICIPATING		3F	4B		relocate 16" Waterline @ McPherson & Loop 20 for City
7	$23,252.92			PARTICIPATING		1B			Str. Stl. plate on UPRR bridge due to redesign
8	$12,824.28			PARTICIPATING		1B			Modify backwalls to temp. bridge
9	$95,000.00			PARTICIPATING		1B			Off-duty Police Officers @ $25.00 per hour.
9S	$60,400.00			PARTICIPATING		1C			Correct hour rate of off-duty Police officers to $21.00 per hour
10	$40,783.38			PARTICIPATING		1B			Roadway excavation & structural excavation
11	$40,891.76			PARTICIPATING		1B			Correct unit payment of portable change. mess sign
12	$753,239.55			PARTICIPATING		1B			Embnkmnt (Ty D)(Cl 3)
13	$42,000.00			PARTICIPATING		1B			New unit payment of portable sign error (See CO#11)
14	$34,000.00			PARTICIPATING		1B			136 Days for port. Change message & new unit payment
15	$12,123.30			PARTICIPATING		3F	4B		Adjust 12"water line for place. 24" RCP for City
16	$11,119.80			PARTICIPATING		1B	3F		Clean tie bar in Zachry job, Medallion "A" modifications
17	$5,485.78			PARTICIPATING		3F			Furnish/install 24" RCP & revisions to overhead sign
18	$23,744.16			PARTICIPATING		1B	3F		Overhead sign support
19	$548,594.44			PARTICIPATING		1B			MSE Ret. Walls B & H & reimburse/disposal for fab panels
20	$144,687.60	1	8	PARTICIPATING	64	1B			Furnish/ install 7x6 boxes due to redesign.
21	$192,373.76			PARTICIPATING		1B	3F		Construct temp. shoring At UPRR crossing
22	$21,181.29			PARTICIPATING		1B	3F		Regrade ramp H & Mc Pherson
23	$39,793.60			PARTICIPATING		1B	3F		Temp. shoring for CD #1, Bent 21 for safety
24	$14,364.35			PARTICIPATING		1B	3F		Extend cable due to relocation of DMS #6
25	$65,400.00			PARTICIPATING		1B			Flex base @ UPRR shoe fly
26	$288,623.69			PARTICIPATING		2F			Repair Asp. Pave. Due to sulfate reation
27	($26,390.35)			PARTICIPATING		3F			Pay medillion form, add shadow line to SSTR
28	$43,113.42			PARTICIPATING		3F			Ashler panels not used due to not matching
29	($1,845.00)			PARTICIPATING		3H			Proposed Electrical Service for the Dynamic Message Sign
30	$218,587.40			PARTICIPATING		1B			Shoring for UPRR bridges
31	$2,749.24			PARTICIPATING		3F			Add work 42" RCP Relocation between Inlet G69 & MH G 3.
32	$114,423.95			PARTICIPATING		2D	3F		Soil retention in blankets for erosion control requirements
33	$3,101.70			PARTICIPATING		2E	3F		Milling IH 35 SB frontage Rd. due to soft spots
34	$47,154.08			PARTICIPATING		2L	3L		Temp. traf. Signals @ Del Mar/Lp20
35	$2,940.00			PARTICIPATING		1B	2E		Re-mobilize drill. Sub unforseen conflict w/ traffic control
36	$4,536.00			PARTICIPATING		3F	3L		Work Zone Pavement Markers -upgrade
37	$124,660.00	3	36	PARTICIPATING	(see C.O. #20)	1B			Jack/bore 48" RCP from inlet G40 to MH G102
38	$10,389.38			PARTICIPATING		3F			Payment for AEP Electrical Services (PP#2)
39	$27,369.18			PARTICIPATING		3F			Box Culvert Removal WBML ditch @ STA. 400+00
40	$161,238.45			PARTICIPATING		2J			Add 15 mos. barricades due to delays
41	$7,152.74			PARTICIPATING		1B			Correct high mast #32 modification
42	$3,122.08			PARTICIPATING		1B	3F		4-Ty A-2 Small Sign Assemblies @ Uniroyal intersection
43	$3,520.00			PARTICIPATING		2F	2I	3F	Backfill Cavities due to rainfall erosion
44	$31,500.00			PARTICIPATING		1B	2F	3F	Bore 24" casing for adquate drainage & const. delays
45	$6,688.93			PARTICIPATING		1B	3F		Const. & place. CL C curb section @ UPRR bridges
46	$6,935.56			PARTICIPATING		2A			Construction of temporary on ramp to DC #2
47	$58,047.38			PARTICIPATING		1B	5B		SubstitueCl B conc. For Portland cement treated base
48	$16,106.00			PARTICIPATING		2E	3F		Placement and removal 2-30" CMP
49	$9,243.85			PARTICIPATING		3I			Substitue exist. emulsified asphalt w/MC-30 for prime coat
50	$36,756.79			PARTICIPATING		1B			Add Ty II pavement markings not on plans
51	$0.00	4	63	PARTICIPATING	90	4A			Add 63 days due to no acess to EB front. Lp. 20 (adj. project)
52	$776.50			PARTICIPATING		3F			Manlift and operator
53	$126,289.84			PARTICIPATING		3F	1B		Relocation of Traffic Management Systems
54	$11,142.50			PARTICIPATING		3G			WheelChair Ramps w/ new ADA Req. Replace Ty A to B
54S	($12.76)			PARTICIPATING		3G			Corrections to CO# 54
55	$37,214.05			PARTICIPATING		2I	3F		12 Lane closures (move/set reacts, etc.)
56	$24,906.07			PARTICIPATING		3C			Change of mix design from Ty D to ty C Pg 76-22
57	$4,405.83			PARTICIPATING		3L			Revisions to UPRR bridge abutment 1 & 2
58	$9,566.37			PARTICIPATING		3F			Modify temp. Traffic Signals @ McPherson & WB Lp. 20
59	$5,762.40			PARTICIPATING		3F			Power up elec. services 9 & 9A to pay AEP Tx Central Co.
60	$3,858.17			PARTICIPATING		3L			Install 7 shoe bases for light pole for safety.
61	$166,167.10			PARTICIPATING		1B			Increase VIVIDS qty. Error in plans.
62	$91,159.90			PARTICIPATING		3L	3F		Add TCP for DC 1 & 2 not on plans

CSJ: 0018-06-131 CHANGE ORDER LIST

NO.	AMOUNT	TIME EXTENSION #	WORKING DAYS ADDED	FHWA PART/NON-PART	CALENDAR DAYS ADDED	REASON CODES			CHANGE ORDER DESCRIPTION
63	$3,970.88			PARTICIPATING		2F			Repair small sign assemblies-damaged by high winds.
64	$0.00	2	193	PARTICIPATING	321	4A			Add 193 days-UPRR traffic switch for shoofly delays.
65	$1,144,695.60	5	153	PARTICIPATING	255	2A			3 different delays.
66	($17,724.17)			PARTICIPATING		1B	2E		Re-design Retain. Wall B,G & H, retrofit soil nails, add concrete for rebar to use as soil nails.
67	$927.31			PARTICIPATING		3F			Reimbursement for relocation of ground box.
68	$118,241.53			PARTICIPATING		2A			Add 11 mos. Barricades-TE of CO#5 (87 Days), weather delays (156 Days)
69	$19,076.93			PARTICIPATING		3F			Furnishing and inst. 7 sections of Pedestrian Railing (PR1)
70	$1,662.94			PARTICIPATING		3F			PVC for irrigation system
71	($232,706.19)			PARTICIPATING		1C			Adj. lime treat subg. Due to hign sulfate concentrations
72	$8,032.88			PARTICIPATING		3F	2C		2 new sets of camera poles
73	$604,645.77	6	50	PARTICIPATING	N/A	3A			Compensate for 50% of repair costs req'd to repair bearing seats on DC#1 & DC#2.
74	$212,463.36			PARTICIPATING		3F			Flex base repairs regarding subgrafde failure SB main lane.
75	$147,377.00			PARTICIPATING		2A			Compensate for 50% of repair costs req'd to Jack DC#1 & DC#2.
76	$47,790.06			PARTICIPATING		3A			Additional Flex Base on WB Frtg Rd.
77	$136,545.96			PARTICIPATING		3F			Compenste for remainaing quantity of Item 247-697 FL BS .
78	$1,259.51			PARTICIPATING		3F			Relocate Overhead Sign Bridge E"
79	$27,687.88			PARTICIPATING		3F			Compensate for repair costs req'd to repair pre-stressed concrete beams.
80	$2,618.90			PARTICIPATING		3F			Reimbursement for AEP Electrical Service Payment
81	$5,392.15			NON-PARTICIPATING		3M			Purchase Unused PR1 Rail from M.O.H.
82	$12,866.44			PARTICIPATING		3A			Addition of Flexbase on IH-35 SB Frtg Rd.
83	$946.06			PARTICIPATING		3F			Remobilize Boring Crew
84	$5,457.95			PARTICIPATING		3F			Addition ofFlex Base TY D in Place at McPherson(due to poor condition)
85	$2,546.21			PARTICIPATING		3F			Relocating of Ground Box & Repair of Duct Bank
86	$9,701.32			PARTICIPATING		3F			Payment to AEP for Electrical Services
87	$1,766.25			PARTICIPATING		3F			Replacing High Mast on IH 35 NB
88	$30,296.54			PARTICIPATING		3F			South Bound Main Lanes Subgrade Repair Reimb. (Rebar Only)
89	$3,862.32			NON-PARTICIPATING		3F			Sale of Four Incorrect Uplight Fixtures to TxDOT due to design error
90	$5,633.55			PARTICIPATING		3L	3I		Addition of Solar Powered Flashing Beacon Assembly
91	$2,166.63			PARTICIPATING		3F			Repair And Reinstall Service Pole 6A
92	$39,670.88			PARTICIPATING		3F			Sale of Two 45' Overhead Bridge Signs to TxDOT
93	$25,723.42			PARTICIPATING		3F			Remove 12" PCCP SBML due to Subgrade Failure
94	$197,665.70	9	29	PARTICIPATING	N/A	3F			DC #1&2 Steel Span Bearing Seat Repair
95	$9,632.31			PARTICIPATING		3F			Sandblasting steel beams on the Lp 20 WB RR Bridge
96	$1,267.36			PARTICIPATING		3F			Cutting off top of legs of large signs
97	$0.00	10	90	PARTICIPATING	115	2A			Time Extension & MS #1 & #2 Adjustment (Deavers Claim Settlement)
98	$436,915.36	11	67	PARTICIPATING	112	2A			SBML Subgrade Failure Compensation
99	$0.00			PARTICIPATING		2A			Milestone #1 & #2 Adjustment (Deavers Claim Settlement)
100	($7,212.29)			NON-PARTICIPATING		5E			Sale of CCTV Equipment to TxDOT (to be done by STAR)
101	$44,232.40			PARTICIPATING		3G			Add Item 540-507 MBGF w/ BLOCKOUTS , adjust Item 540-506
102	$830.98			PARTICIPATING		3F			Addition of Lighting Contactor & Photocell for Ground Mounted Uplights
103	($11,538.37)			PARTICIPATING		3J			Revision to Illumination System Item
104	$1,773.70			PARTICIPATING		3F			Replace Ped Pole Damaged by Traffic Accident
105	$205.10			PARTICIPATING		3M			Medina Electric Payment
106	$4,247.34			PARTICIPATING		3M			Stamped Concrete Set-up Removal Work
107	$10,915.74			PARTICIPATING		3F			Compensation for 3 Items of Xtra Work (MICA)
108	$2,081.68			PARTICIPATING		3F			MBGF Repair Work Requested by TxDOT
109	$3,311.42			PARTICIPATING		3F			Addition of Luminaires to Temporary Traffic Signal @ Loop 20 & IH35
110	$38,910.59			PARTICIPATING		3F			Compensation for Addtl. 2" Flexbase placed @ McPherson & Uniroyal
111	$3,549,705.35			PARTICIPATING		3M			Final Adjustment of Plan Quantity & Major Items

BENCHMARK COORDINATE TABLE			
BM	X	Y	ELEV (FT)
BM 3420	658540.71	17110677.75	470.28
BM 3422	659967.58	17111477.00	462.91
BM 3423	660975.30	17111893.97	484.59
BM 3423A	661175.87	17110985.64	473.59
BM 3424	662348.55	17115811.55	509.10
BM 3425	663802.31	17115282.28	517.46
BM 3426	663066.29	17113890.25	504.27
BM 3427	662608.03	17112257.79	498.44
BM 3428	662455.24	17111447.71	490.88
BM 3429	662246.36	17110728.82	487.65
BM 3430	662125.15	17109222.83	502.60
BM 3431	661233.15	17107628.03	461.80
BM 3433	663925.78	17111101.67	525.94
BM 3434	665583.05	17111934.85	543.28
BM 3436	666757.79	17111856.98	542.26
BM 3437	667614.56	17112858.85	559.13
BM 3438	668113.81	17111.53529	537.43
BM 3448	665020.20	17111139.58	540.76
BM 3501	662123.41	17111664.41	486.81
BM 3502	662729.71	17113780.61	500.92

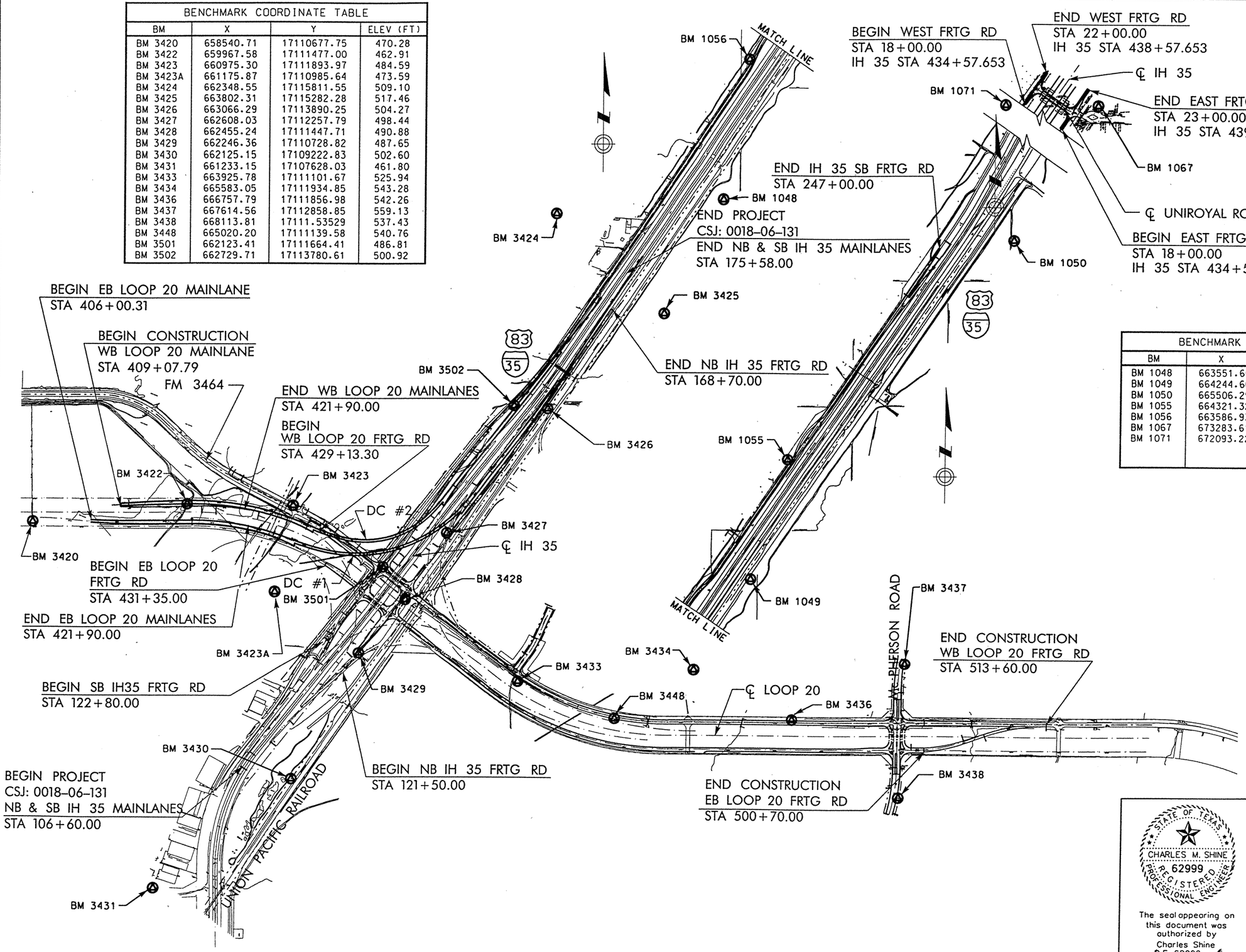

BENCHMARK COORDINATE TABLE			
BM	X	Y	ELEV (FT)
BM 1048	663551.66	17116152.75	518.03
BM 1049	664244.60	17119658.32	538.15
BM 1050	665506.29	17123518.43	582.77
BM 1055	664321.32	17121508.19	556.97
BM 1056	663586.93	17117864.43	523.04
BM 1067	673283.61	17139483.29	670.75
BM 1071	672093.22	17139527.73	643.24

DATE	BY	REV	REVISION

© 1999 Texas Department of Transportation

Brown & Root
HOUSTON, TEXAS

IH 35/LOOP 20

PROJECT LAYOUT
AND
BENCH MARK
LOCATION MAP

STATE OF TEXAS
CHARLES M. SHINE
62999
REGISTERED PROFESSIONAL ENGINEER

The seal appearing on this document was authorized by Charles Shine P.E. 62999, on April 2, 1999.

SHEET 1 OF 5

FED RD DIV NO	STATE PROJECT NO		SHEET NO
6	N4 99(642)		4
STATE	STATE DIST NO	COUNTY	
TEXAS	22	WEBB	
CONT	SECT	JOB	HIGHWAY NO
0018	06	131	IH 35

D03BMX01.DGN-06 04-05-99 BAR_HO_ES05 \HCIVIL\CF0039\PHASE2

REF FILE(S): OLD02.BCK , OBCK LV ON = 2-29

REF FILE(S): J01LOX01.COL, COL LV ON = 20
J01LOX01.ROW, ROW LV ON = 1-61,63
J01LOX01.BCK, BCK LV ON = 2-28,30,32,36,37,39,41-53,58-63
J01LOX01.EOP, EOP LV ON = 27,28,38
J01LOX01.ALG, ALG LV ON = 1-9,13-16,18-36,38,39,43-63
J01LOX01.BDR, BDR LV ON = 8,45,57,59-62

LAREDO DISTRICT WEBB COUNTY, TEXAS

SURVEY CONTROL PT: 3420

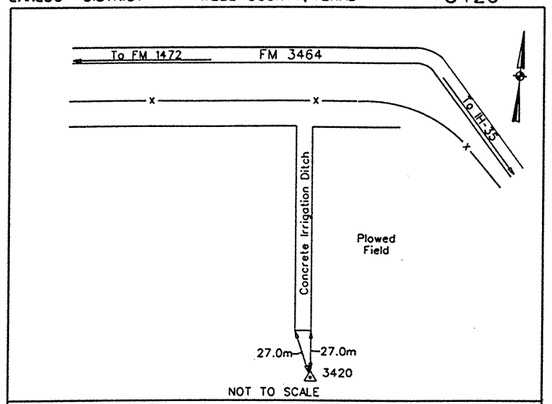

NOT TO SCALE

GENERAL LOCATION: South of FM 3464, at the south end of an Concrete Irrigation Ditch.

COORDINATES: SOUTH ZONE (4205): NAD 83, NAVD 88 (1996 ADJ.)

	METERS	US SURVEY FT
GRID	X- 200717.588 Y- 5215188.554	X- 658520.96 Y- 17110164.45
SURFACE	X- 200723.610 Y- 5215345.010	X- 658540.71 Y- 17110677.75
ELEVATION: 143.341m		470.28 ft

SURFACE ADJ. FACTOR: 1.000030
WGS 84
LATITUDE -27° 36'19.22823"N
LONGITUDE -99° 30'20.80502"W
DATE SET: DECEMBER 14, 1997
MONUMENT: SET 5/8"I.R. W/CAP

WILLIAM L. McCOWN
REG. PROF. LAND SURVEYOR #1719

DATE SKETCHED: JANUARY, 1998

LAREDO DISTRICT WEBB COUNTY, TEXAS

SURVEY CONTROL PT: 3422

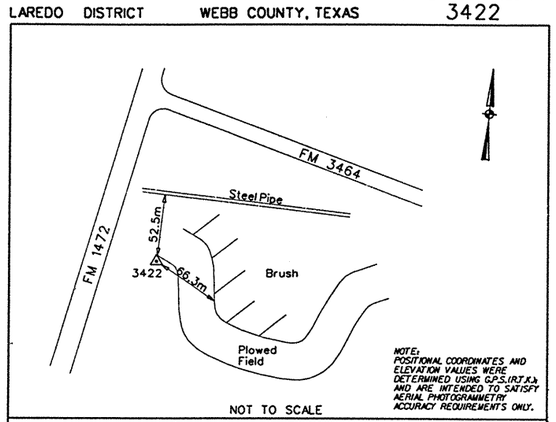

NOT TO SCALE

GENERAL LOCATION: East of FM 1472, south of FM 3464.

COORDINATES: SOUTH ZONE (4205): NAD 83, NAVD 88 (1996 ADJ.)

	METERS	US SURVEY FT
GRID	X- 201152.485 Y- 5215432.159	X- 659947.78 Y- 17110963.68
SURFACE	X- 201158.520 Y- 5215588.622	X- 659967.58 Y- 17111477.00
ELEVATION: 141.095m		462.91 ft

SURFACE ADJ. FACTOR: 1.000030
WGS 84
LATITUDE -27° 36'27.25475"N
LONGITUDE -99° 30'05.01560"W
DATE SET: DECEMBER 14, 1997
MONUMENT: SET 5/8"I.R. W/CAP

WILLIAM L. McCOWN
REG. PROF. LAND SURVEYOR #1719

DATE SKETCHED: JANUARY, 1998

LAREDO DISTRICT WEBB COUNTY, TEXAS

SURVEY CONTROL PT: 3423

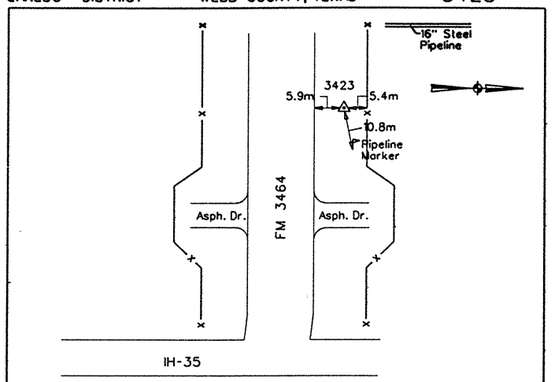

NOT TO SCALE

GENERAL LOCATION: North of FM 3464, west of IH-35.

COORDINATES: SOUTH ZONE (4205): NAD 83, NAVD 88 (1996 ADJ.)

	METERS	US SURVEY FT
GRID	X- 201465.673 Y- 5215559.245	X- 660975.30 Y- 17111380.62
SURFACE	X- 201471.717 Y- 5215715.712	X- 660995.12 Y- 17111893.97
ELEVATION: 147.704m		484.59 ft

SURFACE ADJ. FACTOR: 1.000030
WGS 84
LATITUDE -27° 36'31.46410"N
LONGITUDE -99° 29'53.63064"W
DATE SET: DECEMBER 10, 1997
MONUMENT: SET BRASS DISK IN CONCRETE

WILLIAM L. McCOWN
REG. PROF. LAND SURVEYOR #1719

DATE SKETCHED: JANUARY, 1998

LAREDO DISTRICT WEBB COUNTY, TEXAS

SURVEY CONTROL PT: 3423A

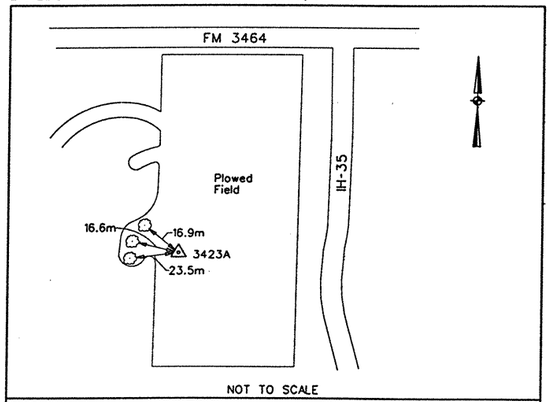

NOT TO SCALE

GENERAL LOCATION: South of FM 3464, west of IH-35.

COORDINATES: SOUTH ZONE (4205): NAD 83, NAVD 88 (1996 ADJ.)

	METERS	US SURVEY FT
GRID	X- 201520.763 Y- 5215282.396	X- 661156.04 Y- 17110472.33
SURFACE	X- 201526.809 Y- 5215438.854	X- 661175.87 Y- 17110985.64
ELEVATION: 144.351m		473.59 ft

SURFACE ADJ. FACTOR: 1.000030
WGS 84
LATITUDE -27° 36'22.48404"N
LONGITUDE -99° 29'51.54171"W
DATE SET: DECEMBER 14, 1997
MONUMENT:

WILLIAM L. McCOWN
REG. PROF. LAND SURVEYOR #1719

DATE SKETCHED: JANUARY, 1998

LAREDO DISTRICT WEBB COUNTY, TEXAS

SURVEY CONTROL PT: 3424

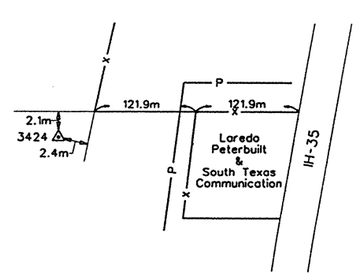

NOT TO SCALE

GENERAL LOCATION: West of IH-35 and Laredo Peterbuilt & South Texas Communications tract.

COORDINATES: SOUTH ZONE (4205): NAD 83, NAVD 88 (1996 ADJ.)

	METERS	US SURVEY FT
GRID	X- 201878.185 Y- 5216753.292	X- 662328.68 Y- 17115298.09
SURFACE	X- 201884.241 Y- 5216909.795	X- 662348.55 Y- 17115811.55
ELEVATION: 155.173m		509.10 ft

SURFACE ADJ. FACTOR: 1.000030
WGS 84
LATITUDE -27° 37'10.36166"N
LONGITUDE -99° 29'38.92966"W
DATE SET: DECEMBER 14, 1997
MONUMENT: SET 5/8"I.R. W/CAP

WILLIAM L. McCOWN
REG. PROF. LAND SURVEYOR #1719

DATE SKETCHED: JANUARY, 1998

LAREDO DISTRICT WEBB COUNTY, TEXAS

SURVEY CONTROL PT: 3425

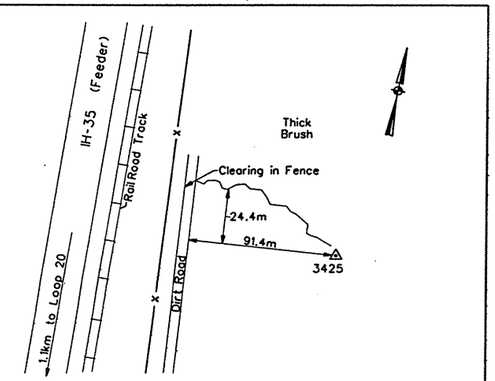

NOT TO SCALE

GENERAL LOCATION: East of IH-35 Feeder Road, approximately 1.1km north of Loop 20.

COORDINATES: SOUTH ZONE (4205): NAD 83, NAVD 88 (1996 ADJ.)

	METERS	US SURVEY FT
GRID	X- 202321.280 Y- 5216591.975	X- 663782.40 Y- 17114768.84
SURFACE	X- 202327.350 Y- 5216748.473	X- 663802.31 Y- 17115282.28
ELEVATION: 157.723m		517.46 ft

SURFACE ADJ. FACTOR: 1.000030
WGS 84
LATITUDE -27° 37'05.23400"N
LONGITUDE -99° 29'22.72255"W
DATE SET: DECEMBER 14, 1997
MONUMENT: SET 5/8"I.R. W/CAP

WILLIAM L. McCOWN
REG. PROF. LAND SURVEYOR #1719

DATE SKETCHED: JANUARY, 1998

RODS SURVEYING, INC.
20119 STUEBNER AIRLINE, SUITE 100
SPRING, TEXAS 77379
TEL (281) 379-6388 FAX (281) 379-1602

STATE OF TEXAS
CHARLES M. SHINE
62999
REGISTERED PROFESSIONAL ENGINEER

The seal appearing on this document was authorized by Charles Shine P.E. 62999, on April 2, 1999.

DATE	BY	REV	REVISION

© 1999 Texas Department of Transportation

Brown & Root
HOUSTON, TEXAS

IH 35/LOOP 20

BENCHMARK LOCATION DETAILS

SHEET 2 OF 5

FED RD DIV NO	STATE PROJECT NO		SHEET NO
6	NH-99(462)		5
STATE	STATE DIST NO		COUNTY
TEXAS	22		WEBB
CONT	SECT	JOB	HIGHWAY NO
0018	06	131	IH 35

REF FILE(S): J01LOX01.BDR, BDR LV ON = 16,45,46,57,60-62

D03BMX06.DGN-01 03-03-99 BAR_HO_ES05 \HCIVIL\CF0039\PHASE2

LAREDO DISTRICT WEBB COUNTY, TEXAS

SURVEY CONTROL PT: 3426

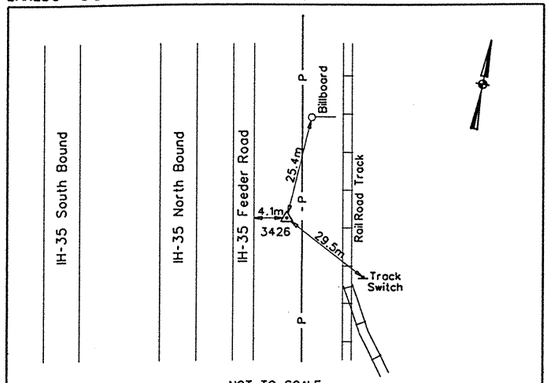

NOT TO SCALE

GENERAL LOCATION: East of IH-35 north Bound Feeder Road, west of Rail Road.

COORDINATES: SOUTH ZONE (4205): NAD 83, NAVD 88 (1996 ADJ.)

	METERS	US SURVEY FT
GRID	X- 202103.008 Y- 5216324.180	X- 663046.40 Y- 17113376.85
SURFACE	X- 202096.946 Y- 5216167.695	X- 663066.29 Y- 17113890.25
ELEVATION: 153.701m		504.27 ft

SURFACE ADJ. FACTOR: 1.000030
WGS 84
LATITUDE -27° 36'51.39291"N
LONGITUDE -99° 29'30.78295"W
DATE SET: DECEMBER 9, 1997
MONUMENT: SET 5/8"I.R. W/CAP

WILLIAM L. McCOWN
REG. PROF. LAND SURVEYOR #1719

DATE SKETCHED: JANUARY, 1998

LAREDO DISTRICT WEBB COUNTY, TEXAS

SURVEY CONTROL PT: 3427

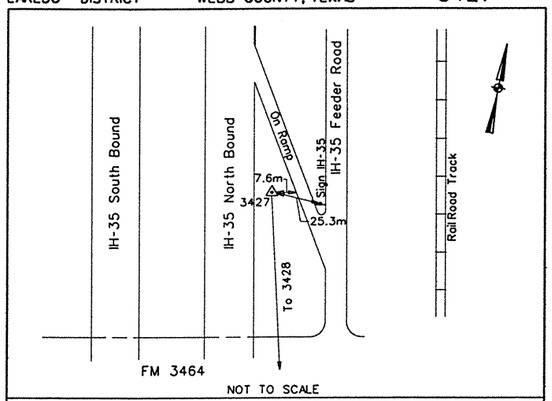

NOT TO SCALE

GENERAL LOCATION: East of IH-35 Feeder Road, north of FM 3464.

COORDINATES: SOUTH ZONE (4205): NAD 83, NAVD 88 (1996 ADJ.)

	METERS	US SURVEY FT
GRID	X- 201957.272 Y- 5215670.137	X- 662588.15 Y- 17111744.44
SURFACE	X- 201963.331 Y- 5215826.607	X- 662608.03 Y- 17112257.79
ELEVATION: 151.924m		498.44 ft

SURFACE ADJ. FACTOR: 1.000030
WGS 84
LATITUDE -27° 36'35.19273"N
LONGITUDE -99° 29'35.73417"W
DATE SET: DECEMBER 9, 1997
MONUMENT: SET 5/8"I.R. W/CAP

WILLIAM L. McCOWN
REG. PROF. LAND SURVEYOR #1719

DATE SKETCHED: JANUARY, 1998

LAREDO DISTRICT WEBB COUNTY, TEXAS

SURVEY CONTROL PT: 3428

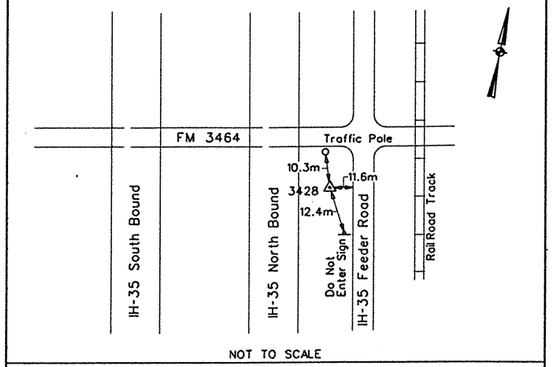

NOT TO SCALE

GENERAL LOCATION: West of IH-35, south of FM 3464.

COORDINATES: SOUTH ZONE (4205): NAD 83, NAVD 88 (1996 ADJ.)

	METERS	US SURVEY FT
GRID	X- 201916.760 Y- 5215423.230	X- 662455.24 Y- 17110934.38
SURFACE	X- 201922.818 Y- 5215579.693	X- 662475.11 Y- 17111447.71
ELEVATION: 149.622m		490.88 ft

SURFACE ADJ. FACTOR: 1.000030
WGS 84
LATITUDE -27° 36'27.16094"N
LONGITUDE -99° 29'37.14072"W
DATE SET: DECEMBER 9, 1997
MONUMENT: SET BRASS DISK IN CONCRETE

WILLIAM L. McCOWN
REG. PROF. LAND SURVEYOR #1719

DATE SKETCHED: JANUARY, 1998

LAREDO DISTRICT WEBB COUNTY, TEXAS

SURVEY CONTROL PT: 3429

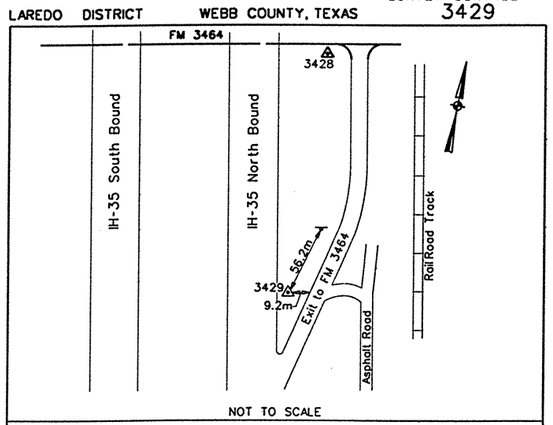

NOT TO SCALE

GENERAL LOCATION: East of IH-35, south of FM 3464.

COORDINATES: SOUTH ZONE (4205): NAD 83, NAVD 88 (1996 ADJ.)

	METERS	US SURVEY FT
GRID	X- 201847.040 Y- 5215204.118	X- 662226.50 Y- 17110215.51
SURFACE	X- 201853.095 Y- 5215360.574	X- 662246.36 Y- 17110728.82
ELEVATION: 148.635m		487.65 ft

SURFACE ADJ. FACTOR: 1.000030
WGS 84
LATITUDE -27° 36'20.02463"N
LONGITUDE -99° 29'39.62041"W
DATE SET: DECEMBER 9, 1997
MONUMENT: SET 5/8"I.R. W/CAP

WILLIAM L. McCOWN
REG. PROF. LAND SURVEYOR #1719

DATE SKETCHED: JANUARY, 1998

LAREDO DISTRICT WEBB COUNTY, TEXAS

SURVEY CONTROL PT: 3430

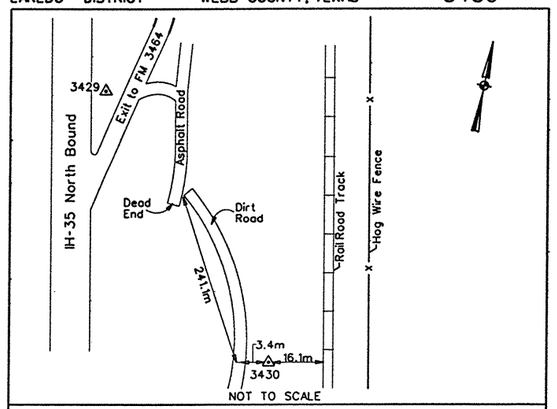

NOT TO SCALE

GENERAL LOCATION: East of IH-35, south of FM 3464.

COORDINATES: SOUTH ZONE (4205): NAD 83, NAVD 88 (1996 ADJ.)

	METERS	US SURVEY FT
GRID	X- 201810.095 Y- 5214745.105	X- 662105.29 Y- 17108709.57
SURFACE	X- 201816.150 Y- 5214901.547	X- 662125.15 Y- 17109222.83
ELEVATION: 153.193m		502.60 ft

SURFACE ADJ. FACTOR: 1.000030
WGS 84
LATITUDE -27° 36'05.10288"N
LONGITUDE -99° 29'40.83576"W
DATE SET: DECEMBER 9, 1997
MONUMENT: SET 5/8"I.R. W/CAP

WILLIAM L. McCOWN
REG. PROF. LAND SURVEYOR #1719

DATE SKETCHED: JANUARY, 1998

LAREDO DISTRICT WEBB COUNTY, TEXAS

SURVEY CONTROL PT: 3431

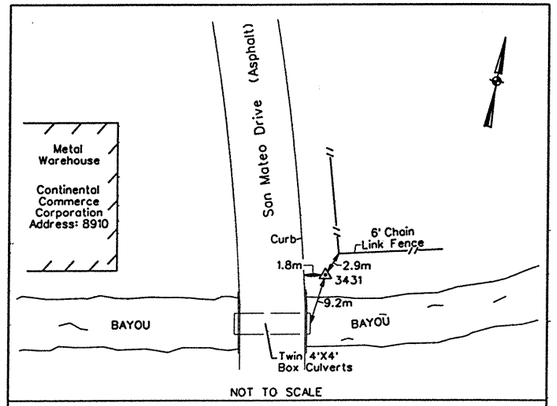

NOT TO SCALE

GENERAL LOCATION: East of San Mateo Drive, north of bayou.

COORDINATES: SOUTH ZONE (4205): NAD 83, NAVD 88 (1996 ADJ.)

	METERS	US SURVEY FT
GRID	X- 201538.221 Y- 5214259.023	X- 661213.31 Y- 17107114.81
SURFACE	X- 201544.267 Y- 5214415.451	X- 661233.15 Y- 17107628.03
ELEVATION: 140.756m		461.80 ft

SURFACE ADJ. FACTOR: 1.000030
WGS 84
LATITUDE -27° 35'49.24144"N
LONGITUDE -99° 29'50.61010"W
DATE SET: DECEMBER 10, 1997
MONUMENT: SET 5/8"I.R. W/CAP

WILLIAM L. McCOWN
REG. PROF. LAND SURVEYOR #1719

DATE SKETCHED: JANUARY, 1998

RODS SURVEYING, INC.
20119 STUEBNER AIRLINE, SUITE 100
SPRING, TEXAS 77379
TEL (281) 379-6388 FAX (281) 379-1602

STATE OF TEXAS
CHARLES M. SHINE
62999
REGISTERED PROFESSIONAL ENGINEER

The seal appearing on this document was authorized by Charles Shine P.E. 62999, on April 2, 1999.

DATE	BY	REV	REVISION

© 1999 Texas Department of Transportation

Brown & Root
HOUSTON, TEXAS

IH 35/LOOP 20

BENCHMARK LOCATION DETAILS

SHEET 3 OF 5

FED RD DIV NO	STATE PROJECT NO	SHEET NO
6	NH-99(462)	

STATE	STATE DIST NO	COUNTY
TEXAS	22	WEBB

CONT	SECT	JOB	HIGHWAY NO
0018	06	131	IH 35

REF FILE(S): J01LOX01.BDR, BDR LV ON = 16,45,46,57,60-62

D03BMX07.DGN-01 03-03-99 BAR_HO_ES05 \HCIVIL\CF0039\PHASE2

LAREDO DISTRICT WEBB COUNTY, TEXAS

SURVEY CONTROL PT: 3433

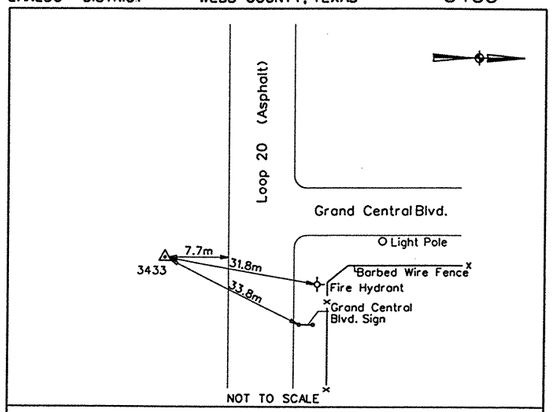

GENERAL LOCATION: South of Loop 20 and intersection of Grand Central Boulevard.

COORDINATES: SOUTH ZONE (4205): NAD 83, NAVD 88 (1996 ADJ.)

	METERS	US SURVEY FT
GRID	X- 202358.910 Y- 5215317.761	X- 663905.86 Y- 17110588.36
SURFACE	X- 202364.981 Y- 5215474.221	X- 663925.78 Y- 17111101.67
ELEVATION: 160.308m		525.94 ft

SURFACE ADJ. FACTOR: 1.000030
WGS 84
LATITUDE -27° 36'23.84734"N
LONGITUDE -99° 29'20.98583"W
DATE SET: DECEMBER 9, 1997
MONUMENT: SET BRASS DISK IN CONCRETE

WILLIAM L. McCOWN
REG. PROF. LAND SURVEYOR #1719

DATE SKETCHED: JANUARY, 1998

LAREDO DISTRICT WEBB COUNTY, TEXAS

SURVEY CONTROL PT: 3434

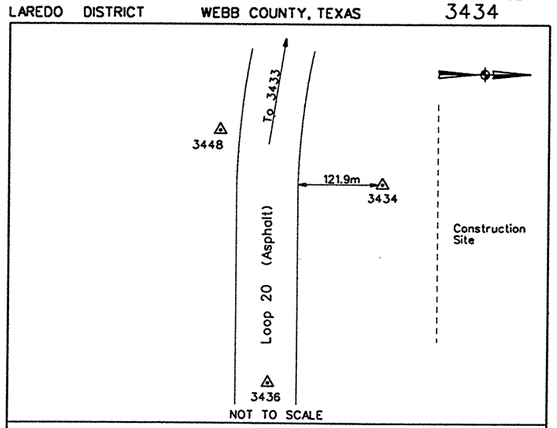

GENERAL LOCATION: North side of Loop 20, east of Grand Central Boulevard.

COORDINATES: SOUTH ZONE (4205): NAD 83, NAVD 88 (1996 ADJ.)

	METERS	US SURVEY FT
GRID	X- 202864.033 Y- 5215571.708	X- 665563.08 Y- 17111421.51
SURFACE	X- 202870.119 Y- 5215728.175	X- 665583.05 Y- 17111934.85
ELEVATION: 165.591m		543.28 ft

SURFACE ADJ. FACTOR: 1.000030
WGS 84
LATITUDE -27° 36'32.22578"N
LONGITUDE -99° 29'02.63689"W
DATE SET: DECEMBER 13, 1997
MONUMENT: 2" X 2" HUB

WILLIAM L. McCOWN
REG. PROF. LAND SURVEYOR #1719

DATE SKETCHED: JANUARY, 1998

LAREDO DISTRICT WEBB COUNTY, TEXAS

SURVEY CONTROL PT: 3436

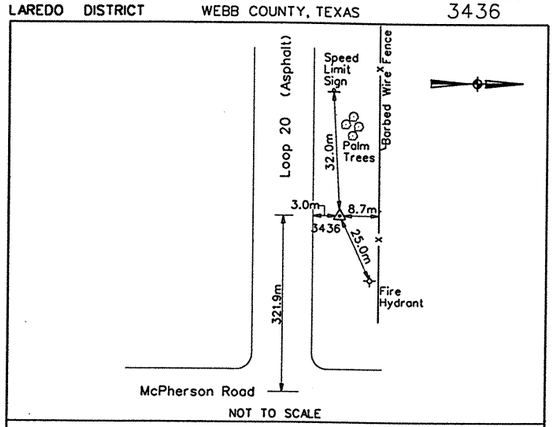

COORDINATES: SOUTH ZONE (4205): NAD 83, NAVD 88 (1996 ADJ.)

	METERS	US SURVEY FT
GRID	X- 203222.085 Y- 5215547.974	X- 666737.79 Y- 17111343.64
SURFACE	X- 203228.182 Y-5215704.440	X- 666757.79 Y- 17111856.98
ELEVATION: 165.281m		542.26 ft

SURFACE ADJ. FACTOR: 1.000030
WGS 84
LATITUDE -27° 36'31.54525"N
LONGITUDE -99° 28'49.57220"W
DATE SET: DECEMBER 9, 1997
MONUMENT: SET 5/8"I.R. W/CAP

WILLIAM L. McCOWN
REG. PROF. LAND SURVEYOR #1719

DATE SKETCHED: JANUARY, 1998

LAREDO DISTRICT WEBB COUNTY, TEXAS

SURVEY CONTROL PT: 3437

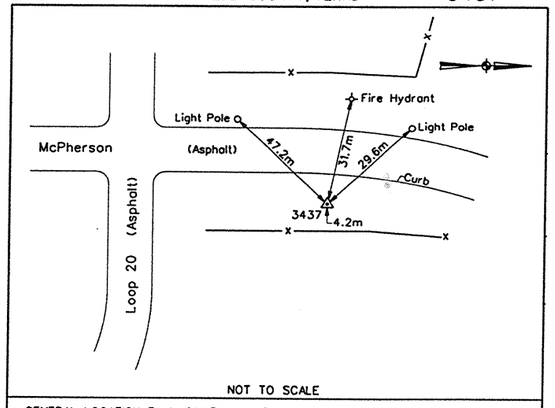

GENERAL LOCATION: East of McPherson Road, north of Loop 20.

COORDINATES: SOUTH ZONE (4205): NAD 83, NAVD 88 (1996 ADJ.)

	METERS	US SURVEY FT
GRID	X- 203483.221 Y- 5215853.333	X- 667594.54 Y- 17112345.48
SURFACE	X- 203489.326 Y- 5216009.809	X- 667614.56 Y- 17112858.85
ELEVATION: 170.422m		559.13 ft

SURFACE ADJ. FACTOR: 1.000030
WGS 84
LATITUDE -27° 36'41.53151"N
LONGITUDE -99° 28'40.13502"W
DATE SET: DECEMBER 13, 1997
MONUMENT: SET 5/8"I.R. W/CAP

WILLIAM L. McCOWN
REG. PROF. LAND SURVEYOR #1719

DATE SKETCHED: JANUARY, 1998

LAREDO DISTRICT WEBB COUNTY, TEXAS

SURVEY CONTROL PT: 3438

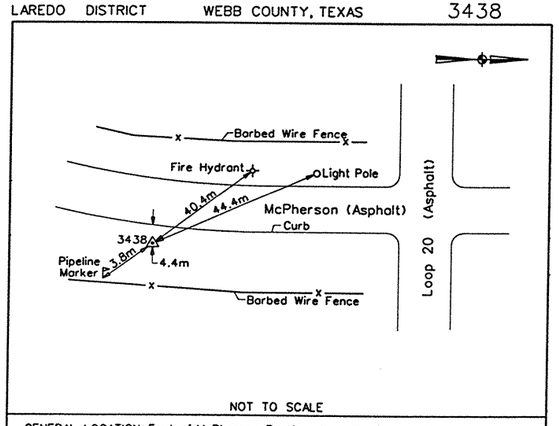

GENERAL LOCATION: East of McPherson Road and south of Loop 20.

COORDINATES: SOUTH ZONE (4205): NAD 83, NAVD 88 (1996 ADJ.)

	METERS	US SURVEY FT
GRID	X- 203635.388 Y- 5215449.923	X- 668093.77 Y- 17111021.96
SURFACE	X- 203641.497 Y- 5215606.387	X- 668113.81 Y- 17111535.29
ELEVATION: 163.810m		537.43 ft

SURFACE ADJ. FACTOR: 1.000030
WGS 84
LATITUDE -27° 36'28.46392"N
LONGITUDE -99° 28'34.47165"W
DATE SET: DECEMBER 9, 1997
MONUMENT: SET 5/8"I.R. W/CAP

WILLIAM L. McCOWN
REG. PROF. LAND SURVEYOR #1719

DATE SKETCHED: JANUARY, 1998

LAREDO DISTRICT WEBB COUNTY, TEXAS

SURVEY CONTROL PT: 3448

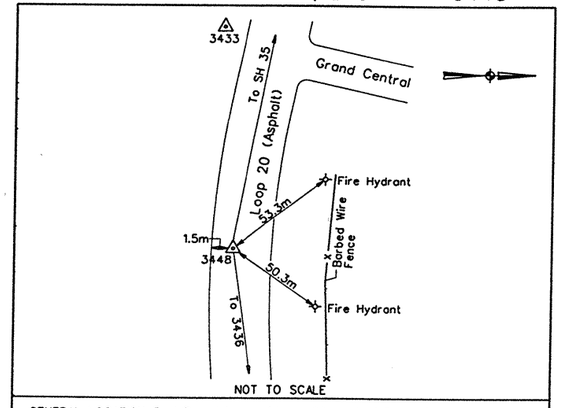

GENERAL LOCATION: East Bound Lane of Loop 20, east of Grand Central Road.

COORDINATES: SOUTH ZONE (4205): NAD 83, NAVD 88 (1996 ADJ.)

	METERS	US SURVEY FT
GRID	X- 202692.482 Y- 5215329.316	X- 665000.25 Y- 17110626.27
SURFACE	X- 202698.563 Y- 5215485.776	X- 665020.20 Y- 17111139.58
ELEVATION: 164.825m		540.76 ft

SURFACE ADJ. FACTOR: 1.000030
WGS 84
LATITUDE -27° 36'24.30753"N
LONGITUDE -99° 29'08.82419"W
DATE SET: DECEMBER 12, 1997
MONUMENT: SET PK NAIL IN ASPHALT

WILLIAM L. McCOWN
REG. PROF. LAND SURVEYOR #1719

DATE SKETCHED: JANUARY, 1998

RODS SURVEYING, INC.
20119 STUEBNER AIRLINE, SUITE 100
SPRING, TEXAS 77379
TEL (281) 379-6388 FAX (281) 379-1602

STATE OF TEXAS
CHARLES M. SHINE
62999
REGISTERED PROFESSIONAL ENGINEER

The seal appearing on this document was authorized by Charles Shine P.E. 62999, on April 2, 1999.

DATE	BY	REV	REVISION

© 1999 Texas Department of Transportation

Brown & Root
HOUSTON, TEXAS

IH 35/LOOP 20

BENCHMARK LOCATION DETAILS

SHEET 4 OF 5

FED RD DIV NO	STATE PROJECT NO		SHEET NO
6	NH-99(462)		7
STATE	STATE DIST NO		COUNTY
TEXAS	22		WEBB
CONT	SECT	JOB	HIGHWAY NO
0018	06	131	IH 35

REF FILE(S): J01LOX01.BDR, .BDR LV ON = 16,45,46,57,60-62

D0JBMX08.DGN-01 03-03-99 BAR_HO_ES05 \HCIVIL\CF0039\PHASE2

LAREDO DISTRICT WEBB COUNTY, TEXAS

SURVEY CONTROL PT: 3502

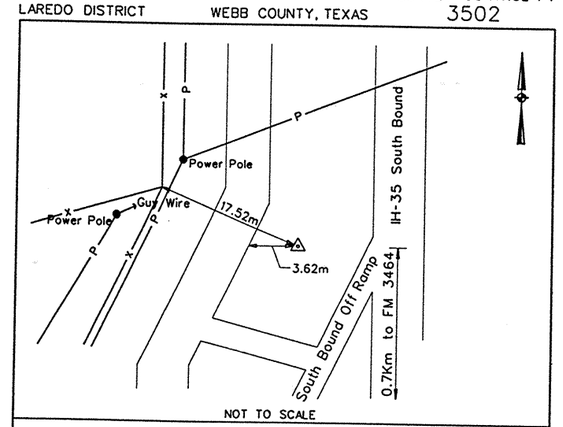

NOT TO SCALE

GENERAL LOCATION: WEST OF IH 35 SOUTHBOUND, 0.7 KM NORTH OF FM 3464.

COORDINATES: SOUTH ZONE (4205): NAD 83, NAVD 88 (1996 ADJ.)

SURFACE X= 17113780.61
Y= 662729.71

GRID X= 2019994.361
Y= 5216134.279

WGS 84
LATITUDE =27° 36'50.28110"N
LONGITUDE =99° 29'34.51474"W

SURFACE ADJ. FACTOR: 1.000030

ELEVATION: 152.679

DATE SET: SEPTEMBER 1997

TYPE OF MONUMENT: BRASS DISK IN CONC. WITH 5/8" I.R.

WILLIAM L. McCOWN
REG. PROF. LAND SURVEYOR #1719

DATE SKETCHED: SEPTEMBER 1997

LAREDO DISTRICT WEBB COUNTY, TEXAS

SURVEY CONTROL PT: 3501

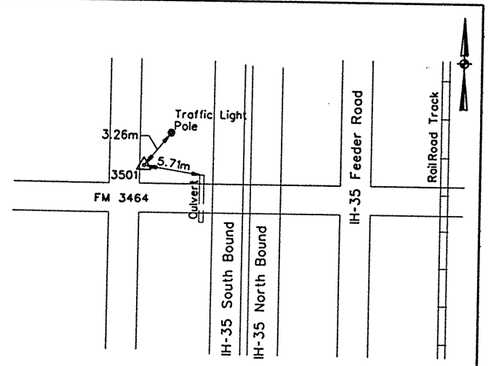

NOT TO SCALE

GENERAL LOCATION: FM 3464 AT IH 35.

COORDINATES: SOUTH ZONE (4205): NAD 83, NAVD 88 (1996 ADJ.)

SURFACE X= 17111664.65
Y= 662123.41

GRID X= 201809.564
Y= 5215489.353

WGS 84
LATITUDE =27° 36'29.28169"N
LONGITUDE =99° 29'41.06909"W

SURFACE ADJ. FACTOR: 1.000030

ELEVATION: 148.381

DATE SET: SEPTEMBER 1997

TYPE OF MONUMENT: BRASS DISK IN CONC. WITH 5/8" I.R.

ALL

WILLIAM L. McCOWN
REG. PROF. LAND SURVEYOR #1719

DATE SKETCHED: SEPTEMBER 1997

RODS SURVEYING, INC.
20119 STUEBNER AIRLINE, SUITE 100
SPRING, TEXAS 77379
TEL (281) 379-6388 FAX (281) 379-1602

STATE OF TEXAS
CHARLES M. SHINE
R.P.L.S. 62999 REGISTERED
PROFESSIONAL ENGINEER

The seal appearing on this document was authorized by Charles Shine P.E. 62999, on April 2, 1999.

DATE	BY	REV	REVISION

© 1999 Texas Department of Transportation

Brown & Root
HOUSTON, TEXAS

IH 35/LOOP 20

BENCHMARK
LOCATION DETAILS

SHEET 5 OF 5

FED RD DIV NO	STATE PROJECT NO		SHEET NO
6	NH-99(462)		3
STATE	STATE DIST NO	COUNTY	
TEXAS	22	WEBB	
CONT	SECT	JOB	HIGHWAY NO
0018	06	131	IH 35

REF FILE(S): J01LOX01.BDR, BDR LV ON = 16,45,46,57,60-62

D03BMX09.DGN-01 03-03-99 BAR_HO_ES05 \HCIVIL\CF0039\PHASE2

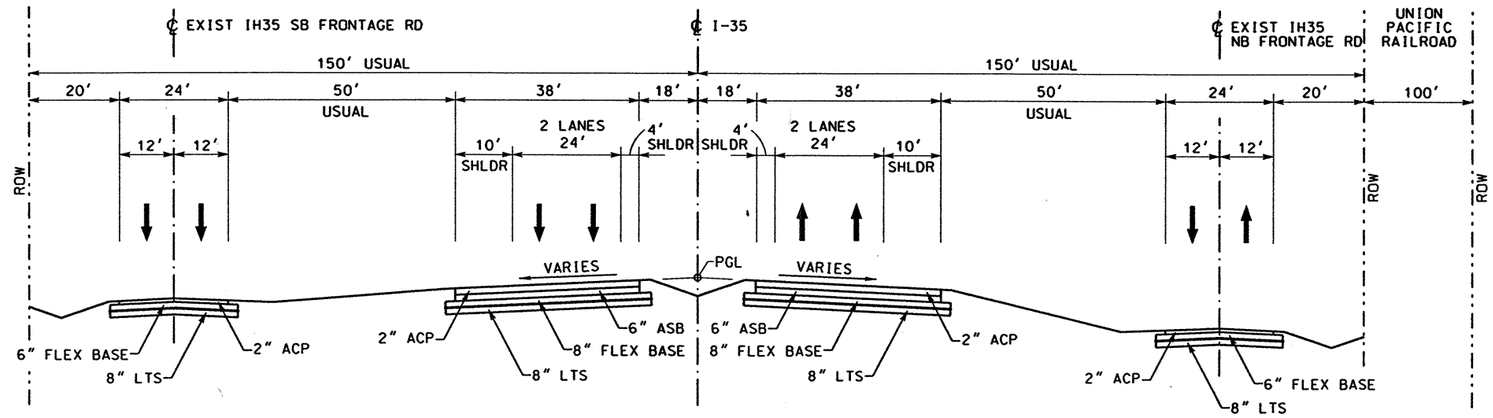

EXISTING TYPICAL SECTION I-35
NTS

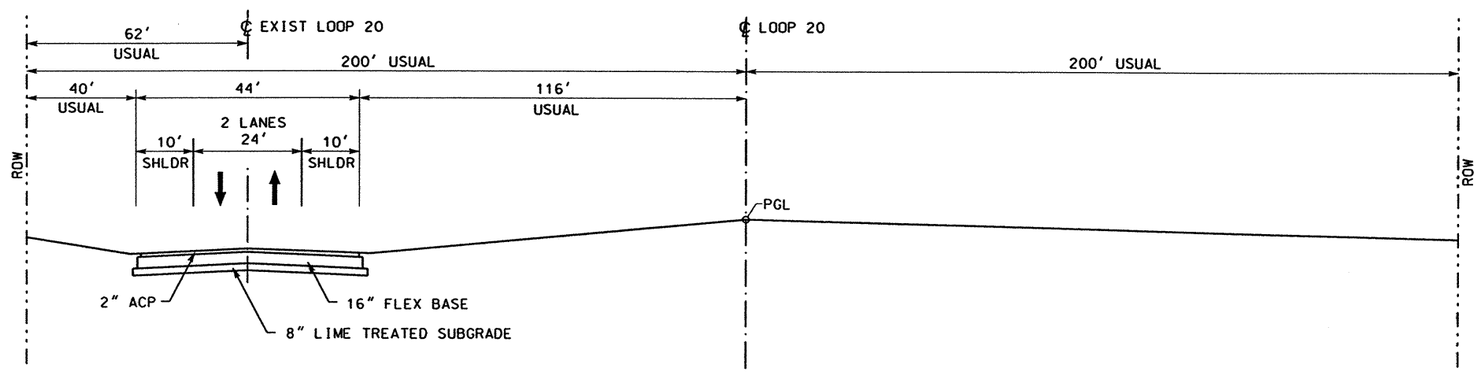

EXISTING TYPICAL SECTION LOOP 20
NTS

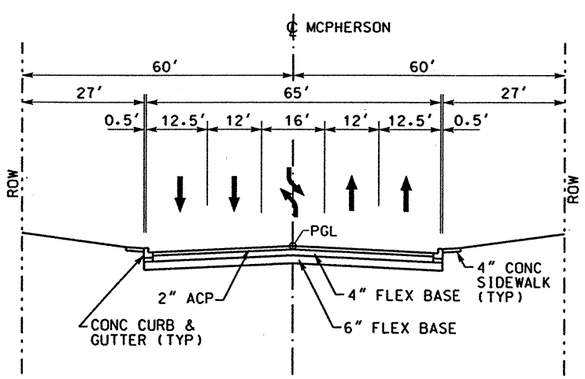

EXISTING TYPICAL SECTION MCPHERSON
NTS

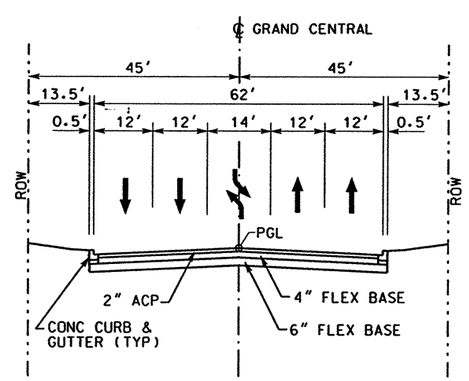

EXISTING TYPICAL SECTION GRAND CENTRAL
NTS

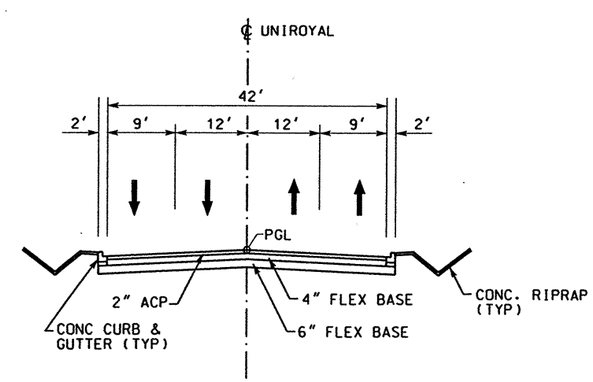

EXISTING TYPICAL SECTION UNIROYAL
NTS

STATE OF TEXAS
BRUCE J. PRESTON
55387
REGISTERED PROFESSIONAL ENGINEER

The seal appearing on this document was authorized by Bruce J. Preston P.E. 55387 on April 2, 1999.

DATE	BY	REV	REVISION

© 1999 Texas Department of Transportation

Brown & Root
HOUSTON, TEXAS

LOOP 20
IH35

EXISTING
TYPICAL SECTIONS

SHEET 1 OF 19

FED RD DIV NO	STATE PROJECT NO		SHEET NO
6	C86-14-23		9
STATE	STATE DIST NO	COUNTY	
TEXAS	22	WEBB	
CONT	SECT	JOB	HIGHWAY NO
0086	14	023	LOOP 20

REF FILE(S): J01LOX01.BDR. BDR LV ON = 45.47.57.60-62

D02TSX01.DGN-07 03-17-99 BAR_HO_ES05 \HCIVIL\GF0039\PHASE2

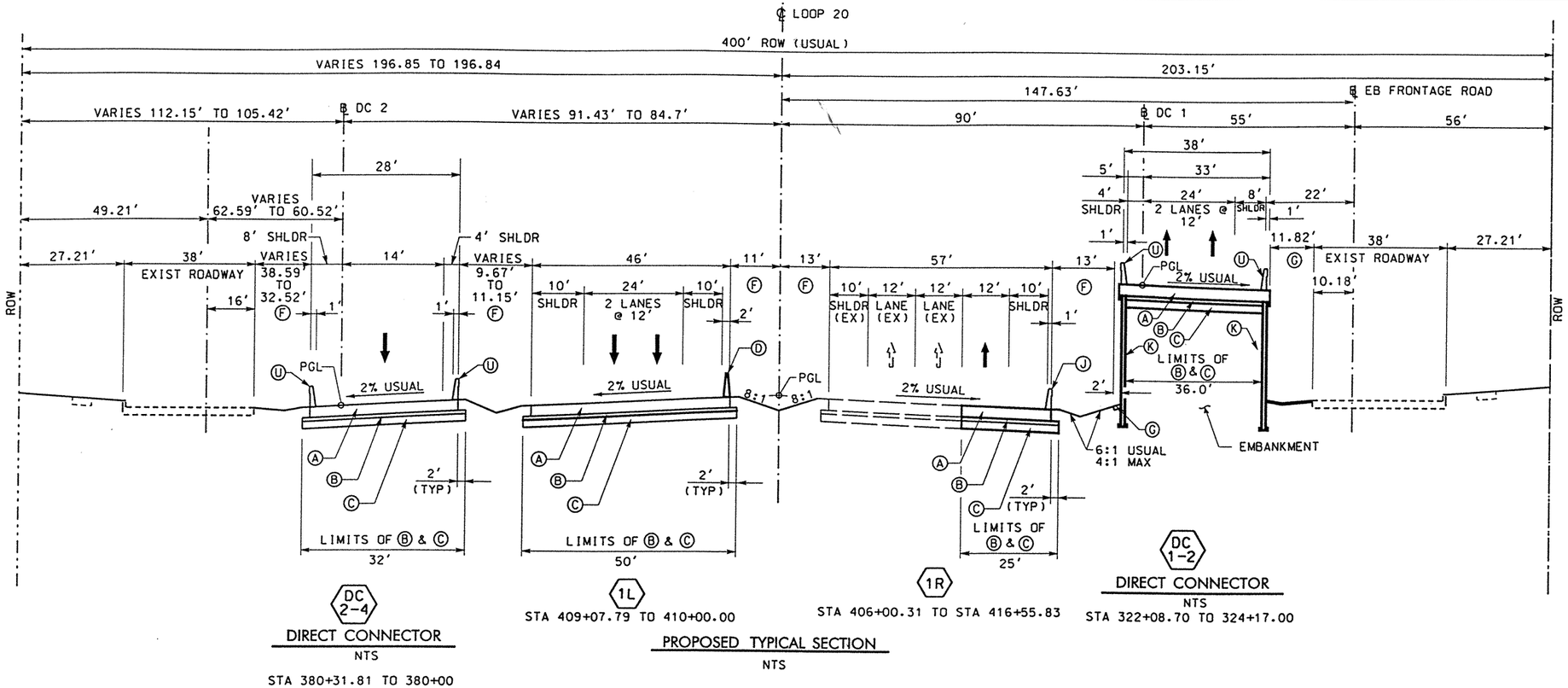

LEGEND:

- Ⓐ CONC PAV (CONT REINF HY STL)(12")
- Ⓑ ASPH CONC PAV (TY A)(4")
- Ⓒ LIME TREATED SUBGRADE (8")
- Ⓓ SINGLE SLOPE CONCRETE BARRIER (SSCB) (TYPE 2)
- Ⓔ TYPE II MONO CURB (6")
- Ⓕ CELL FIBER MULCH SEED (PERM) (RURAL)(CLAY)
- Ⓖ CLASS B RIPRAP (4")
- Ⓗ CONC SIDEWALK (4")
- Ⓘ CONC MEDIAN (6")
- Ⓙ SINGLE SLOPE TRAFFIC RAIL(SSTR) w/ DRAIN SLOTS
- Ⓚ RETAINING WALL
- Ⓛ METAL BEAM GUARD FENCE
- Ⓜ BRICK PAVERS
- Ⓝ REMOVE ASPH CONC PAV
- Ⓞ REMOVE CONC PAV
- Ⓟ TYPE II CURB AND GUTTER (6")
- Ⓠ CONCRETE DRIVEWAYS (6")
- Ⓡ ASPH CONC PAV (TY D)(2")
- Ⓢ ASPH CONC PAV (TY A)(8")
- Ⓣ PLANE ASPH CONC PAV (0 - 1")
- Ⓤ SINGLE SLOPE TRAFFIC RAIL (SSTR)
- Ⓥ CHAINLINK FENCE (6')
- Ⓦ ROADWAY UNDERDRAIN
- Ⓧ WHEELCHAIR RAMP TYPE B

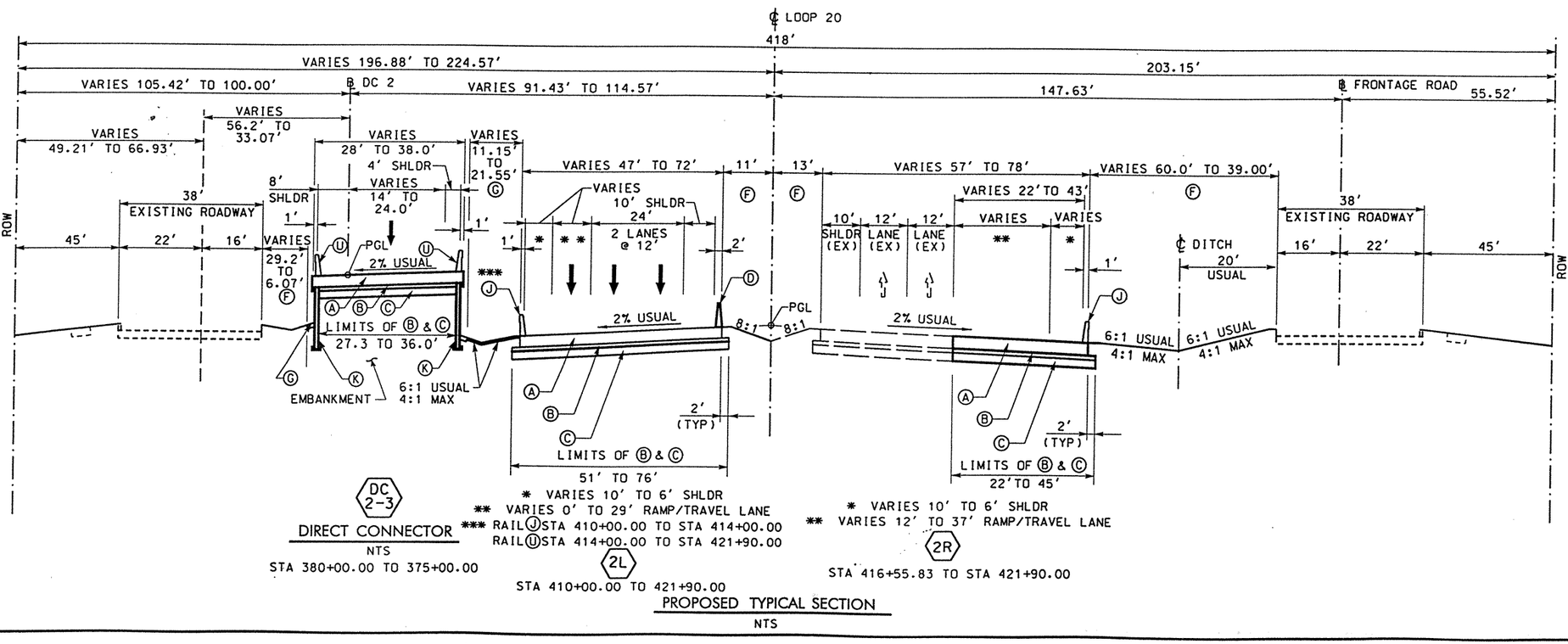

STATE OF TEXAS
BRUCE J. PRESTON
55387
REGISTERED PROFESSIONAL ENGINEER

The seal appearing on this document was authorized by Bruce J. Preston P.E. 55387, on April 2, 1999.

DATE	BY	REV	REVISION

© 1999 Texas Department of Transportation

Brown & Root
HOUSTON, TEXAS

LOOP 20

PROPOSED TYPICAL SECTIONS

SHEET 2 OF 19

FED RD DIV NO	STATE PROJECT NO	SHEET NO
6	C86-14-23	10

STATE	STATE DIST NO	COUNTY
TEXAS	22	WEBB

CONT	SECT	JOB	HIGHWAY NO
0086	14	023	LOOP 20

REF FILE(S): J01LOX01.BDR, BDR LV ON = 45.47.57.60-62

D021SX02.DGN-14 03-17-99 BAR_HO_ES05 \HCIVIL\CF0039\PHASE2

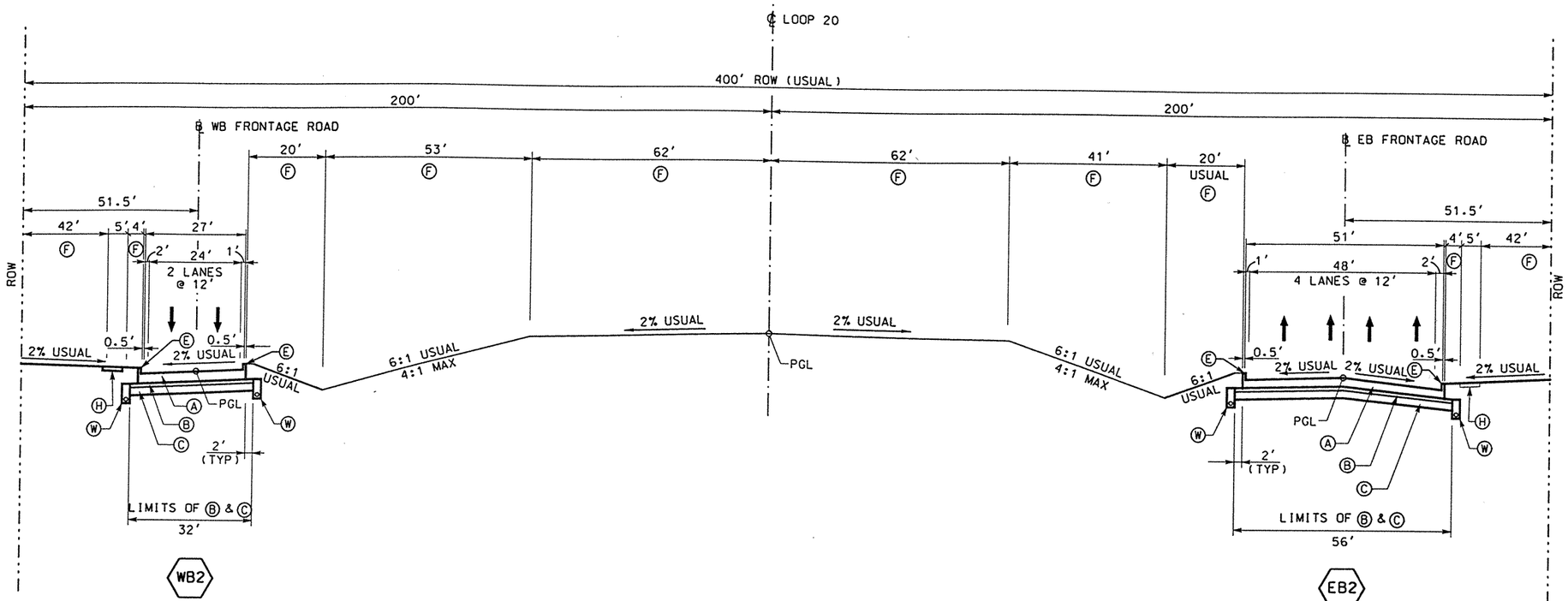

WB2

WESTBOUND FRONTAGE ROAD

NTS

STA 435+18.87(AH) TO 435+92.43

EB2

EASTBOUND FRONTAGE ROAD

NTS

STA 432+85.00 TO 434+21.27(BK)
STA 435+18.87 TO 436+03.66(AH)

LEGEND:

- Ⓐ CONC PAV (CONT REINF HY STL)(12")
- Ⓑ ASPH CONC PAV (TY A)(4")
- Ⓒ LIME TREATED SUBGRADE (8")
- Ⓓ SINGLE SLOPE CONCRETE BARRIER (SSCB) (TYPE 2)
- Ⓔ TYPE II MONO CURB (6")
- Ⓕ CELL FIBER MULCH SEED (PERM) (RURAL)(CLAY)
- Ⓖ CLASS B RIPRAP (4")
- Ⓗ CONC SIDEWALK (4")
- Ⓘ CONC MEDIAN (6")
- Ⓙ SINGLE SLOPE TRAFFIC RAIL(SSTR) w/ DRAIN SLOTS
- Ⓚ RETAINING WALL
- Ⓛ METAL BEAM GUARD FENCE
- Ⓜ BRICK PAVERS
- Ⓝ REMOVE ASPH CONC PAV
- Ⓞ REMOVE CONC PAV
- Ⓟ TYPE II CURB AND GUTTER (6")
- Ⓠ CONCRETE DRIVEWAYS (6")
- Ⓡ ASPH CONC PAV (TY D)(2")
- Ⓢ ASPH CONC PAV (TY A)(8")
- Ⓣ PLANE ASPH CONC PAV (0 - 1")
- Ⓤ SINGLE SLOPE TRAFFIC RAIL (SSTR)
- Ⓥ CHAINLINK FENCE (6')
- Ⓦ ROADWAY UNDERDRAIN
- Ⓧ WHEELCHAIR RAMP TYPE B

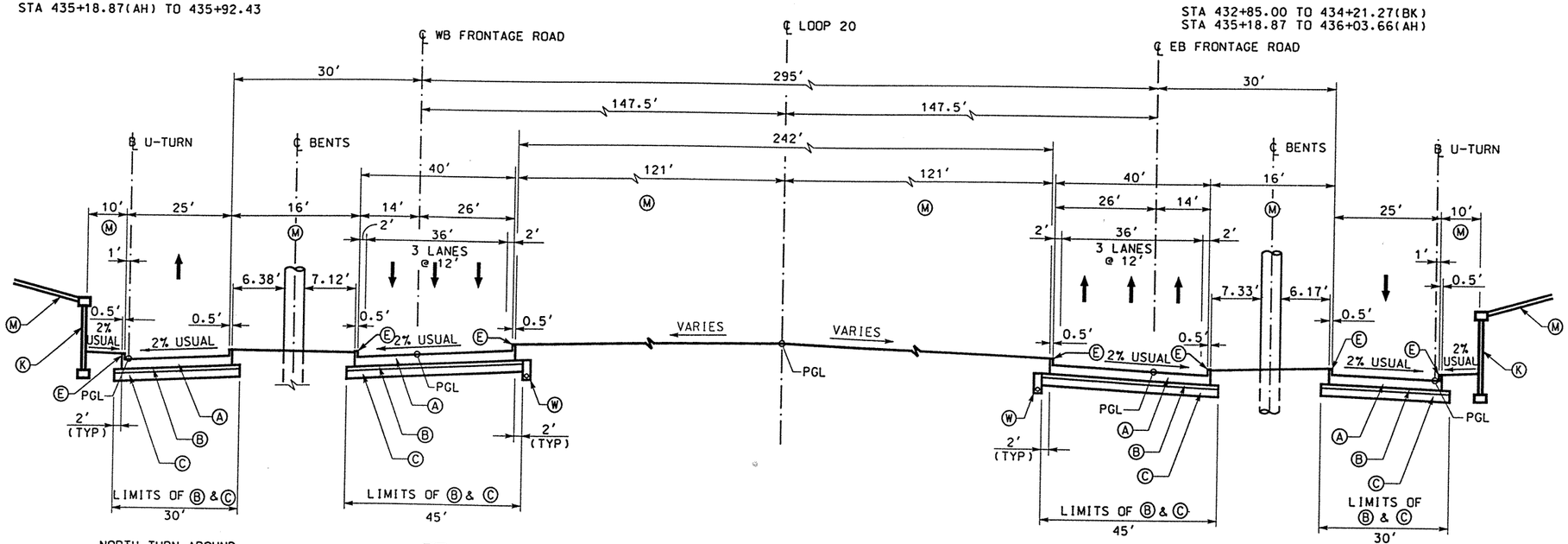

NORTH TURN AROUND IH35 @ LP 20

WB3

WESTBOUND FRONTAGE ROAD

NTS

STA 438+32.12 TO 439+82.12

PROPOSED TYPICAL SECTION

NTS

EB3

EASTBOUND FRONTAGE ROAD

NTS

STA 438+32.00 TO 439+81.87

SOUTH TURN AROUND IH35 @ LP 20

STATE OF TEXAS
BRUCE J. PRESTON
P.E. 55387
REGISTERED PROFESSIONAL ENGINEER

The seal appearing on this document was authorized by Bruce J. Preston P.E. 55387, on April 2, 1999.

DATE	BY	REV	REVISION

© 1999 Texas Department of Transportation

Brown & Root
HOUSTON, TEXAS

LOOP 20

PROPOSED
TYPICAL SECTIONS

SHEET 3 OF 19

FED RD DIV NO	STATE PROJECT NO		SHEET NO
6	C86-14-23		11
STATE	STATE DIST NO		COUNTY
TEXAS	22		WEBB
CONT	SECT	JOB	HIGHWAY NO
0086	14	023	LOOP 20

REF FILE(S): J01LOX01.BDR, BDR LV ON = 45,47,57,60-62

D02TSX03.DGN-12 03-17-99 BAR_HO_ES05 \HCIVIL\CF0039\PHASE2

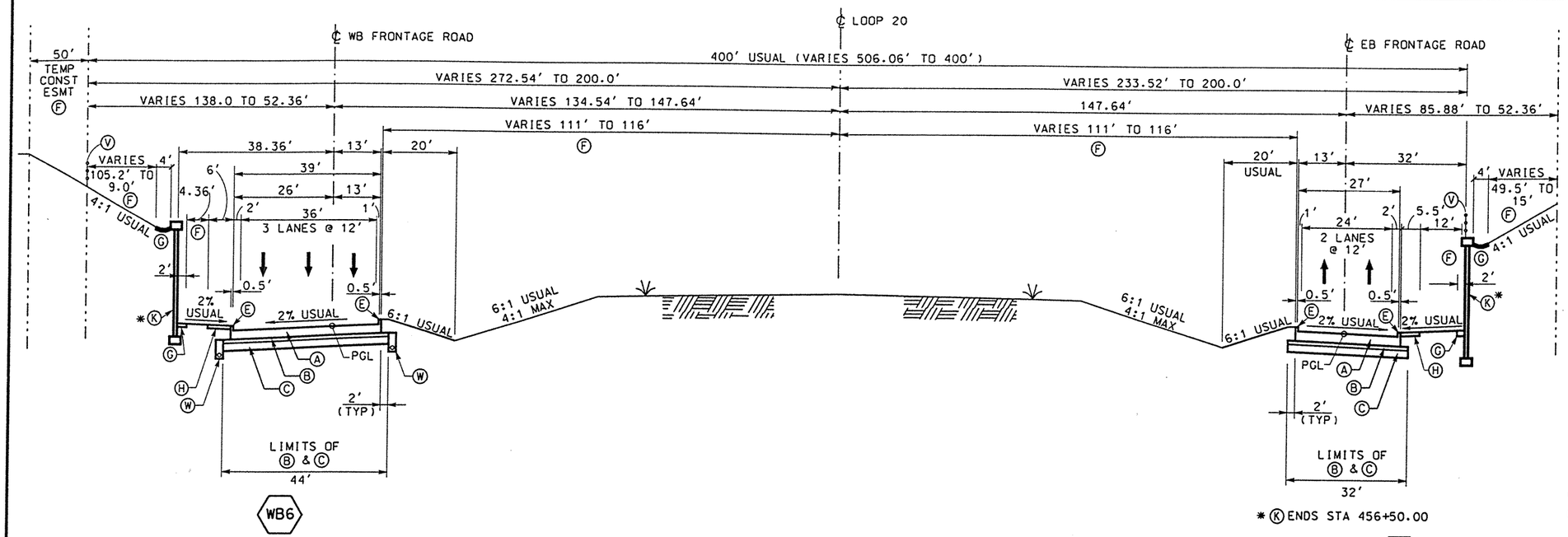

WB6

WESTBOUND FRONTAGE ROAD

NTS

STA 446+30.00 TO 460+00.00

* (K) ENDS STA 453+00

PROPOSED TYPICAL SECTION

NTS

EB6

EASTBOUND FRONTAGE ROAD

NTS

STA 447+00.00 TO 459+50.00

LEGEND:

- (A) CONC PAV (CONT REINF HY STL)(12")
- (B) ASPH CONC PAV (TY A)(4")
- (C) LIME TREATED SUBGRADE (8")
- (D) SINGLE SLOPE CONCRETE BARRIER (SSCB) (TYPE 2)
- (E) TYPE II MONO CURB (6")
- (F) CELL FIBER MULCH SEED (PERM) (RURAL)(CLAY)
- (G) CLASS B RIPRAP (4")
- (H) CONC SIDEWALK (4")
- (I) CONC MEDIAN (6")
- (J) SINGLE SLOPE TRAFFIC RAIL(SSTR) w/ DRAIN SLOTS
- (K) RETAINING WALL
- (L) METAL BEAM GUARD FENCE
- (M) BRICK PAVERS
- (N) REMOVE ASPH CONC PAV
- (O) REMOVE CONC PAV
- (P) TYPE II CURB AND GUTTER (6")
- (Q) CONCRETE DRIVEWAYS (6")
- (R) ASPH CONC PAV (TY D)(2")
- (S) ASPH CONC PAV (TY A)(8")
- (T) PLANE ASPH CONC PAV (0 - 1")
- (U) SINGLE SLOPE TRAFFIC RAIL (SSTR)
- (V) CHAINLINK FENCE (6')
- (W) ROADWAY UNDERDRAIN
- (X) WHEELCHAIR RAMP TYPE B

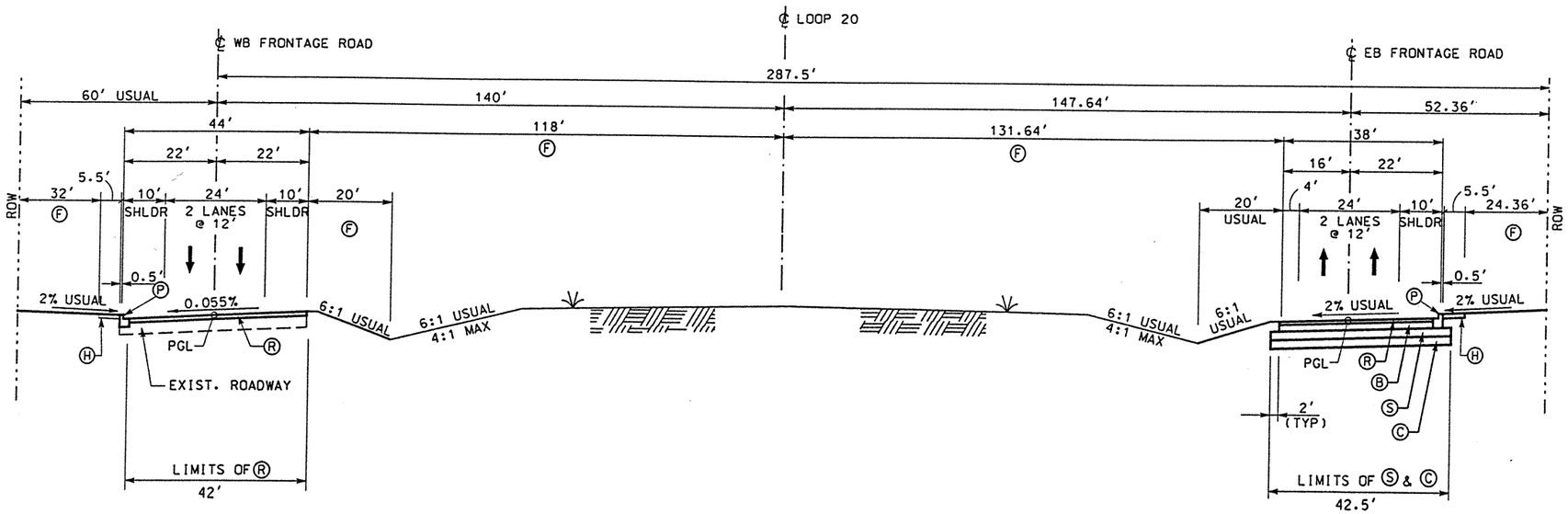

WB8

WESTBOUND FRONTAGE ROAD

NTS

STA 463+00.00 TO 491+30.00

PROPOSED TYPICAL SECTION

NTS

EB8

EASTBOUND FRONTAGE ROAD

NTS

STA 461+00.00 TO 472+20.00
STA 477+80.00 TO 493+40.00

STATE OF TEXAS
CHARLES M. SHINE
62999
REGISTERED PROFESSIONAL ENGINEER

The seal appearing on this document was authorized by Charles Shine P.E. 62999 on June 3, 1999.

DATE	BY	REV	REVISION
6/3/99	DV	1	OFFSETS

© 1999 Texas Department of Transportation

Brown & Root
HOUSTON, TEXAS

LOOP 20

PROPOSED TYPICAL SECTIONS

SHEET 4 OF 19

FED RD DIV NO	STATE PROJECT NO	SHEET NO
6	C86-14-23	12

STATE	STATE DIST NO	COUNTY
TEXAS	22	WEBB

CONT	SECT	JOB	HIGHWAY NO
0086	14	023	LOOP 20

SEE REVISION
REV. 6-25-99

REF FILE(S): J01LOX01.BDR. BDR LV ON = 45.47.57.60-62

D021SX04.DGN-17 06-03-99 BAR_HO_ES05 \HCIVIL\CF0039\PHASE2

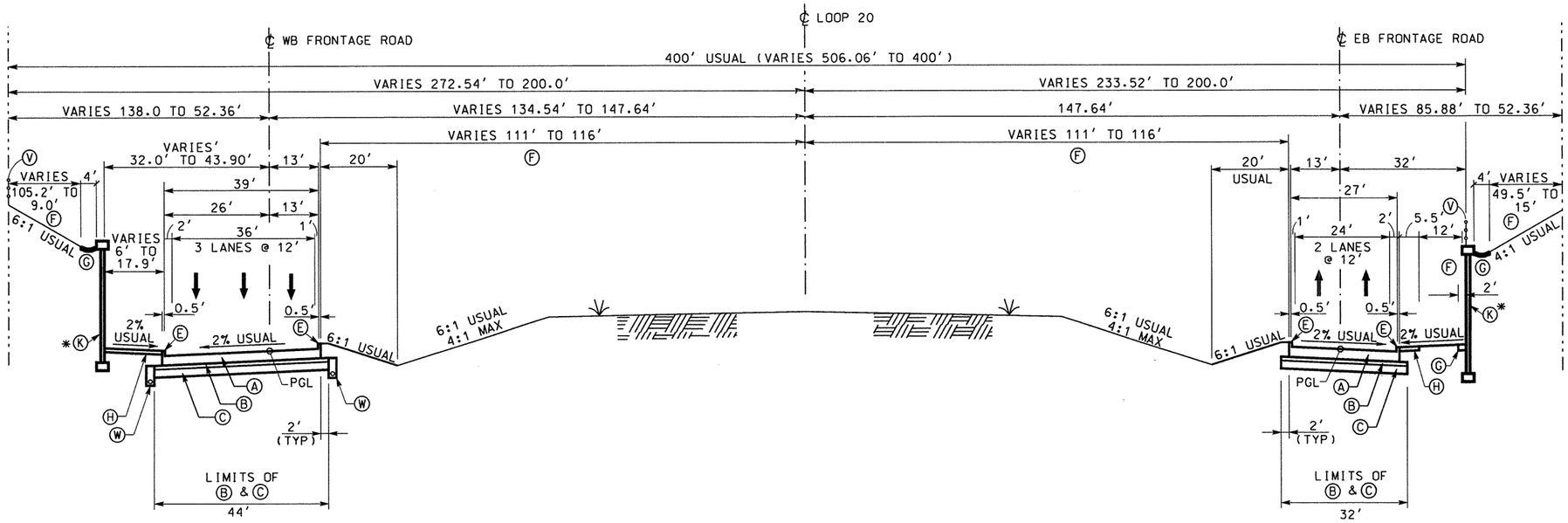

WB6

WESTBOUND FRONTAGE ROAD

NTS

STA 446+30.00 TO 460+00.00

* Ⓚ ENDS 457+29.37

PROPOSED TYPICAL SECTION

NTS

EB6

EASTBOUND FRONTAGE ROAD

NTS

STA 447+00.00 TO 459+50.00

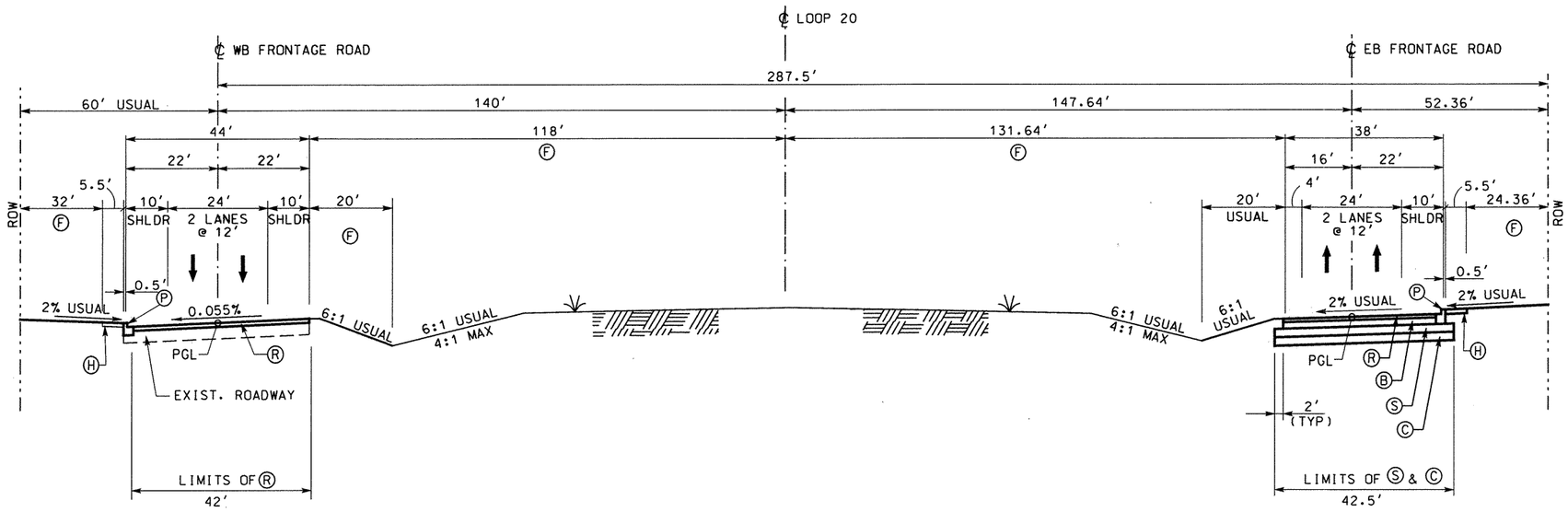

WB8

WESTBOUND FRONTAGE ROAD

NTS

STA 463+00.00 TO 491+30.00

PROPOSED TYPICAL SECTION

NTS

EB8

EASTBOUND FRONTAGE ROAD

NTS

STA 461+00.00 TO 472+20.00
STA 477+80.00 TO 493+40.00

LEGEND:

- Ⓐ CONC PAV (CONT REINF HY STL)(12")
- Ⓑ ASPH CONC PAV (TY A)(4")
- Ⓒ LIME TREATED SUBGRADE (8")
- Ⓓ SINGLE SLOPE CONCRETE BARRIER (SSCB) (TYPE 2)
- Ⓔ TYPE II MONO CURB (6")
- Ⓕ CELL FIBER MULCH SEED (PERM) (RURAL)(CLAY)
- Ⓖ CLASS B RIPRAP (4")
- Ⓗ CONC SIDEWALK (4")
- Ⓘ CONC MEDIAN (6")
- Ⓙ SINGLE SLOPE TRAFFIC RAIL(SSTR) w/ DRAIN SLOTS
- Ⓚ RETAINING WALL
- Ⓛ METAL BEAM GUARD FENCE
- Ⓜ BRICK PAVERS
- Ⓝ REMOVE ASPH CONC PAV
- Ⓞ REMOVE CONC PAV
- Ⓟ TYPE II CURB AND GUTTER (6")
- Ⓠ CONCRETE DRIVEWAYS (6")
- Ⓡ ASPH CONC PAV (TY D)(2")
- Ⓢ ASPH CONC PAV (TY A)(8")
- Ⓣ PLANE ASPH CONC PAV (0 - 1")
- Ⓤ SINGLE SLOPE TRAFFIC RAIL (SSTR)
- Ⓥ CHAINLINK FENCE (6')
- Ⓦ ROADWAY UNDERDRAIN
- Ⓧ WHEELCHAIR RAMP TYPE B

STATE OF TEXAS
CHARLES M. SHINE
62999
REGISTERED PROFESSIONAL ENGINEER

The seal appearing on this document was authorized by Charles Shine P.E. 62999, on September 30, 1999.

DATE	BY	REV	REVISION
6/3/99	DV	1	OFFSETS
9/29/99	DV	2	WB6 WB FRTG RD

© 1999 Texas Department of Transportation

Brown & Root
HOUSTON, TEXAS

LOOP 20

PROPOSED TYPICAL SECTIONS

SHEET 4 OF 19

FED RD DIV NO	STATE PROJECT NO		SHEET NO
6	C86-14-23		12
STATE	STATE DIST NO	COUNTY	
TEXAS	22	WEBB	
CONT	SECT	JOB	HIGHWAY NO
0086	14	023	LOOP 20

REF FILE(S): J01LOX01.BDR, BDR LV ON = 45,47,57,60-62

D02TSX04.DGN-19 06-03-99 BAR_HO_ES05 \HCIVIL\CF0039\PHASE2

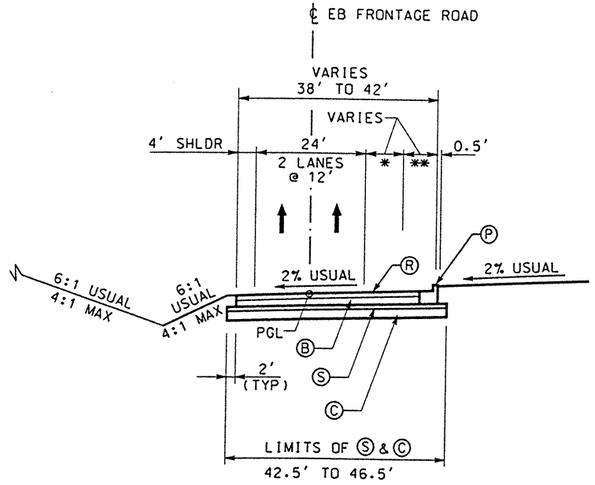

* 0' TO 12' LANE
** 10' SHLDR TO 2' SHLDR

EB9

EASTBOUND FRONTAGE ROAD

NTS

STA 472+20 TO 474+20

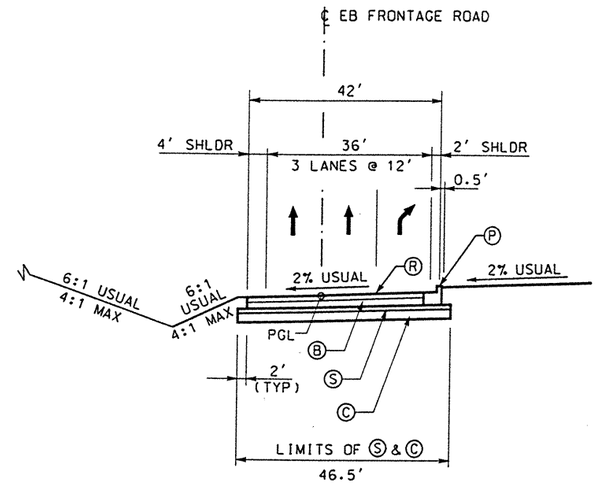

EB10

EASTBOUND FRONTAGE ROAD

NTS

STA 474+20 TO 477+80

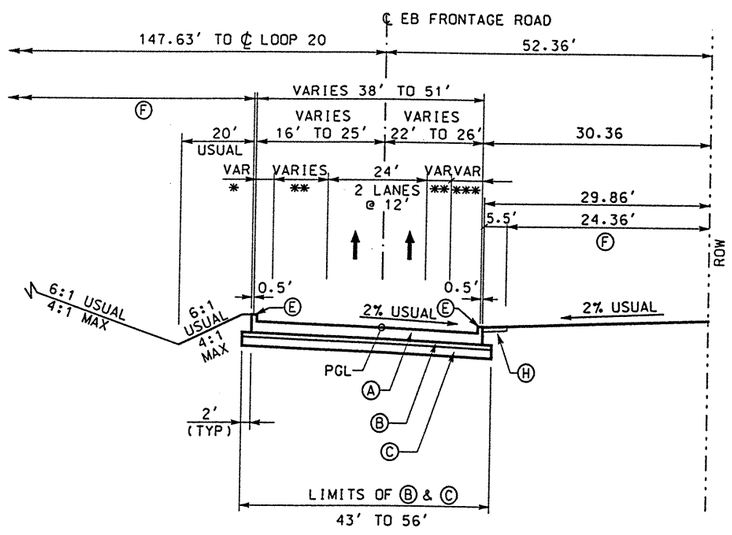

* VARIES 4' TO 1' SHOULDER
** VARIES 0' TO 12' TRAVEL LANE
*** VARIES 10' TO 2' SHOULDER

EB11

EASTBOUND FRONTAGE ROAD

NTS

STA 493+40.00 TO 494+90.00

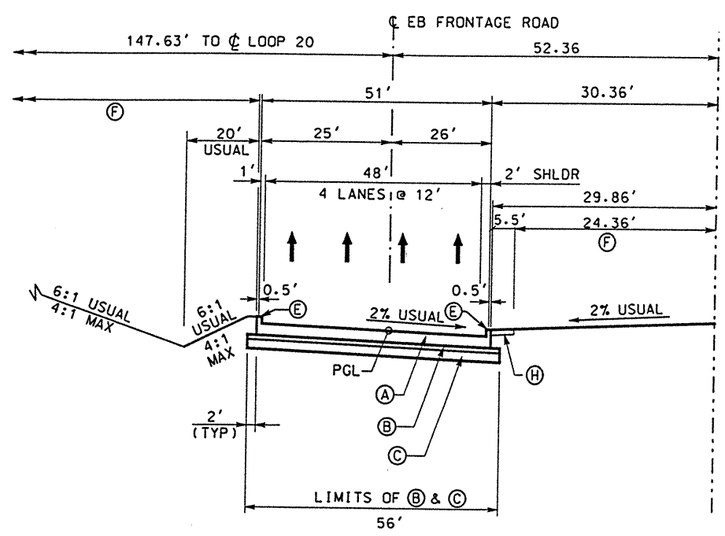

EB12

EASTBOUND FRONTAGE ROAD

NTS

STA 494+90.00 TO 496+43.32
STA 499+25.33 TO STA 500+70.00

SEE REVISION
REV. 6-25-99

STATE OF TEXAS
CHARLES M. SHINE
62999
REGISTERED
PROFESSIONAL ENGINEER

The seal appearing on this document was authorized by Charles Shine P.E. 62999, on June 3, 1999.

DATE	BY	REV	REVISION
6/3/99	DV	1	OFFSETS

© 1999 Texas Department of Transportation

Brown & Root
HOUSTON, TEXAS

LOOP 20
EASTBOUND
FRONTAGE ROAD
PROPOSED
TYPICAL SECTIONS

SHEET 6 OF 19

FED RD DIV NO	STATE PROJECT NO		SHEET NO
6	C86-14-23		14
STATE	STATE DIST NO	COUNTY	
TEXAS	22	WEBB	
CONT	SECT	JOB	HIGHWAY NO
0086	14	023	LOOP 20

REF FILE(S): J01LOX01.BDR, BDR LV ON = 45,47,57,60-62

D02TSX06.DGN-15 06-02-99 BAR_HO_ES05 \HCIVIL\CF0039\PHASE2

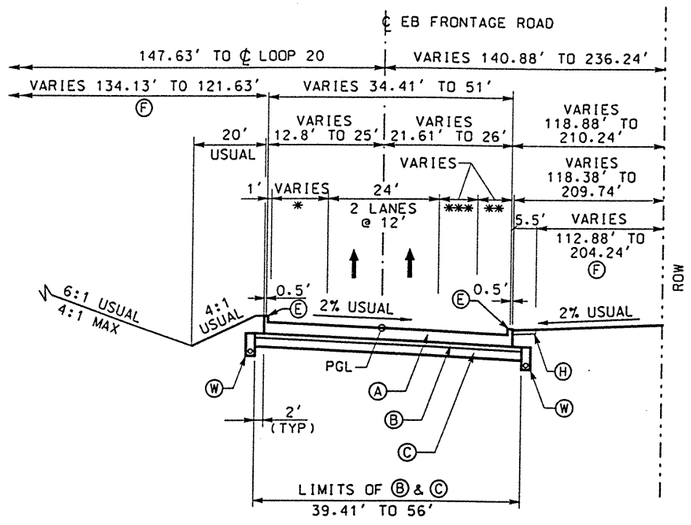

* VARIES 0' TO 12' TRAVEL LANE
** VARIES 10' TO 2' SHLDR
*** VARIES 0' TO 12' TRAVEL LANE

EB1

EASTBOUND FRONTAGE ROAD

NTS

STA 431+35.00 TO 432+85.00

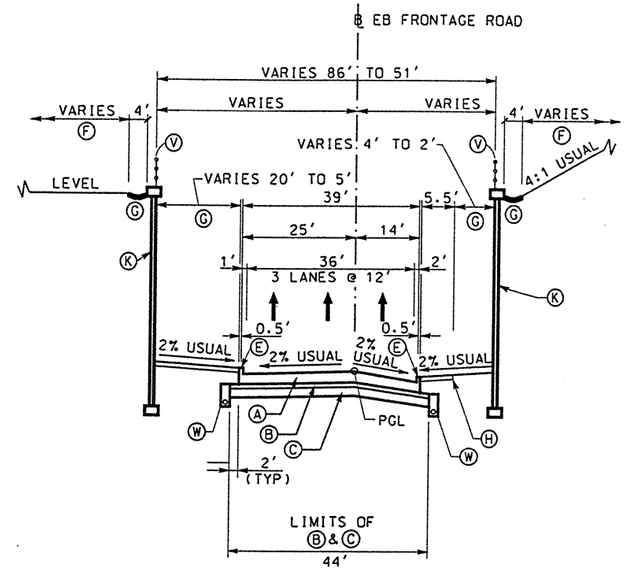

EB4

EASTBOUND FRONTAGE ROAD

NTS

STA 442+15.00 TO 444+90.00

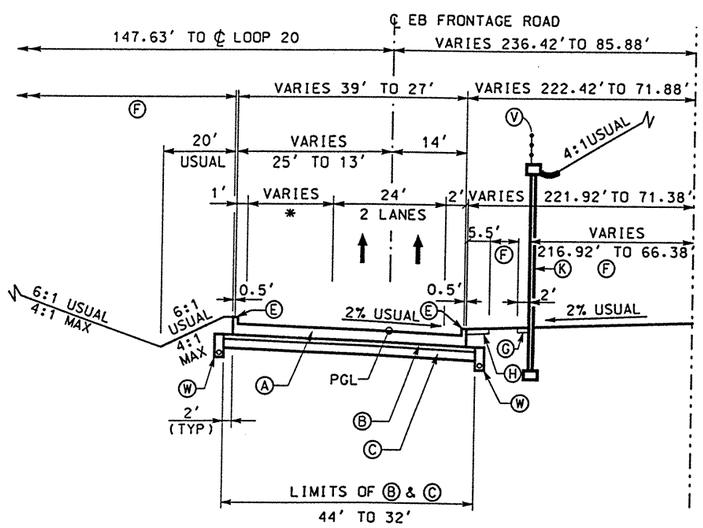

* VARIES 12' TO 0' TRAVEL LANE

EB5

EASTBOUND FRONTAGE ROAD

NTS

STA 444+90.00 TO 447+00.00

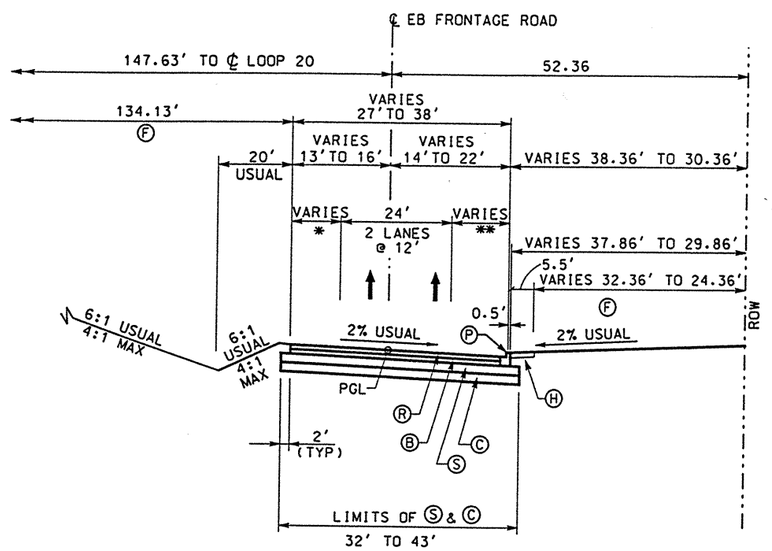

* VARIES 1' TO 4' LEFT SHOULDER
** VARIES 2' TO 10' RIGHT SHOULDER

EB7

EASTBOUND FRONTAGE ROAD

NTS

STA 459+50.00 TO 461+00.00

LEGEND:

- Ⓐ CONC PAV (CONT REINF HY STL)(12")
- Ⓑ ASPH CONC PAV (TY A)(4")
- Ⓒ LIME TREATED SUBGRADE (8")
- Ⓓ SINGLE SLOPE CONCRETE BARRIER (SSCB) (TYPE 2)
- Ⓔ TYPE II MONO CURB (6")
- Ⓕ CELL FIBER MULCH SEED (PERM) (RURAL)(CLAY)
- Ⓖ CLASS B RIPRAP (4")
- Ⓗ CONC SIDEWALK (4")
- Ⓘ CONC MEDIAN (6")
- Ⓙ SINGLE SLOPE TRAFFIC RAIL(SSTR) w/ DRAIN SLOTS
- Ⓚ RETAINING WALL
- Ⓛ METAL BEAM GUARD FENCE
- Ⓜ BRICK PAVERS
- Ⓝ REMOVE ASPH CONC PAV
- Ⓞ REMOVE CONC PAV
- Ⓟ TYPE II CURB AND GUTTER (6")
- Ⓠ CONCRETE DRIVEWAYS (6")
- Ⓡ ASPH CONC PAV (TY D)(2")
- Ⓢ ASPH CONC PAV (TY A)(8")
- Ⓣ PLANE ASPH CONC PAV (0 - 1")
- Ⓤ SINGLE SLOPE TRAFFIC RAIL (SSTR)
- Ⓥ CHAINLINK FENCE (6')
- Ⓦ ROADWAY UNDERDRAIN
- Ⓧ WHEELCHAIR RAMP TYPE B

STATE OF TEXAS
CHARLES M. SHINE
62999
REGISTERED PROFESSIONAL ENGINEER

The seal appearing on this document was authorized by Charles Shine P.E. 62999, on June 3, 1999.

DATE	BY	REV	REVISION
6/3/99	DV	1	OFFSETS

© 1999 Texas Department of Transportation

Brown & Root
HOUSTON, TEXAS

LOOP 20
EASTBOUND
FRONTAGE ROAD
PROPOSED
TYPICAL SECTIONS

SHEET 5 OF 19

FED RD DIV NO	STATE PROJECT NO		SHEET NO
6	C86-14-23		13
STATE	STATE DIST NO	COUNTY	
TEXAS	22	WEBB	
CONT	SECT	JOB	HIGHWAY NO
0086	14	023	LOOP 20

REV. 6-25-99

REF FILE(S): J01LOX01.BDR, BDR LV ON = 45,47,57,60-62

D02TSX05.DGN-15 06-02-99 BAR_HO_ES05 \HOIVIL\CF0039\PHASE2

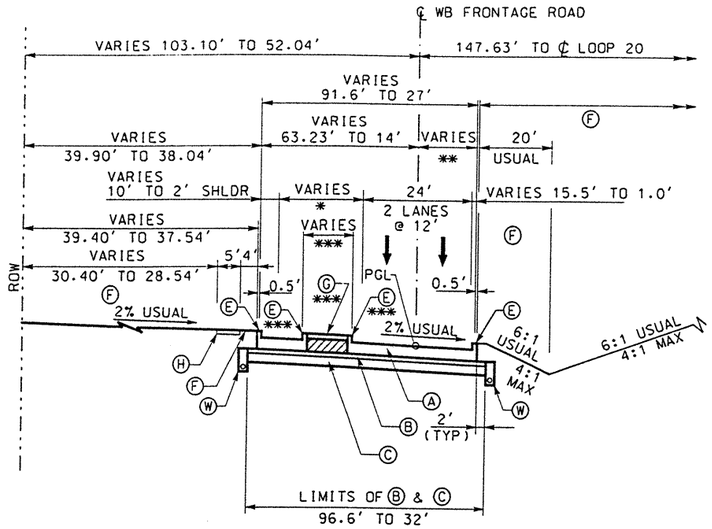

* VARIES 42.1' TO 0' RAMP/TRAVEL LANE
** VARIES 27.5' TO 13.0'
*** GORE AREA BETWEEN FM 3464 AND WB FRONTAGE RD (STA 429+13.30 TO 430.41.46)

WB1

WESTBOUND FRONTAGE ROAD

NTS

STA 429+13.30 TO 436+16.46 (BK)

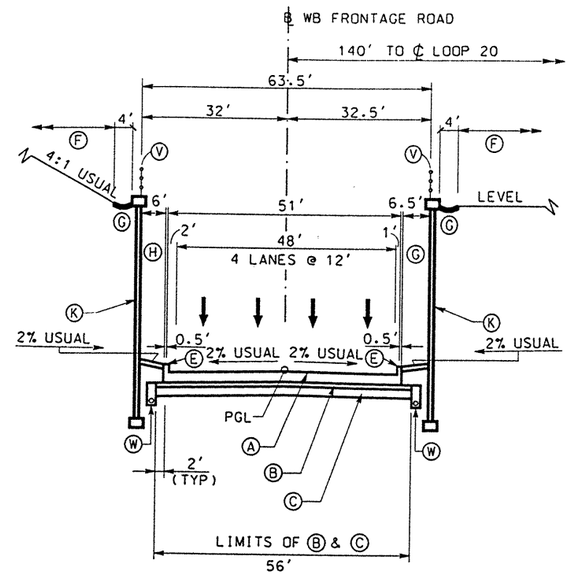

WB4

WESTBOUND FRONTAGE ROAD

NTS

STA 442+15.12 TO 444+80.00

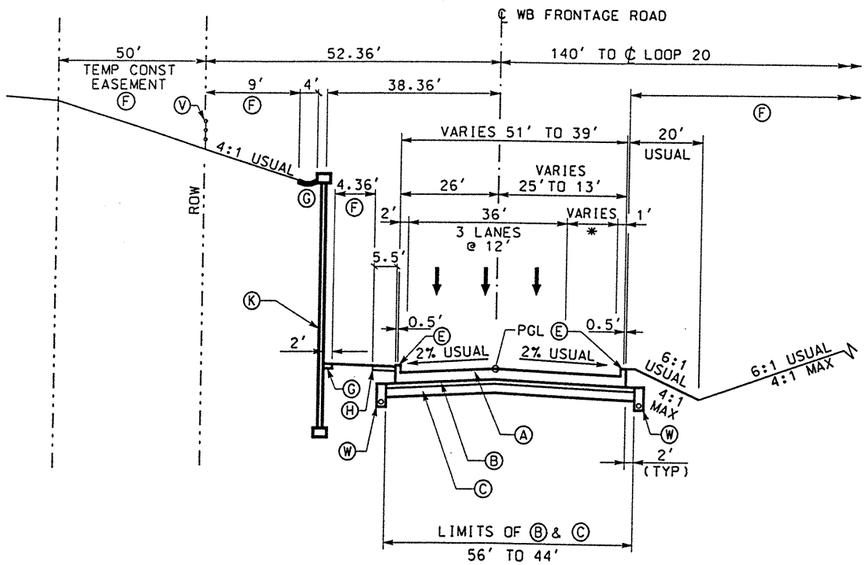

* VARIES 12' TO 0' TRAVEL LANE

WB5

WESTBOUND FRONTAGE ROAD

NTS

STA 444+80.00 TO 446+30.00

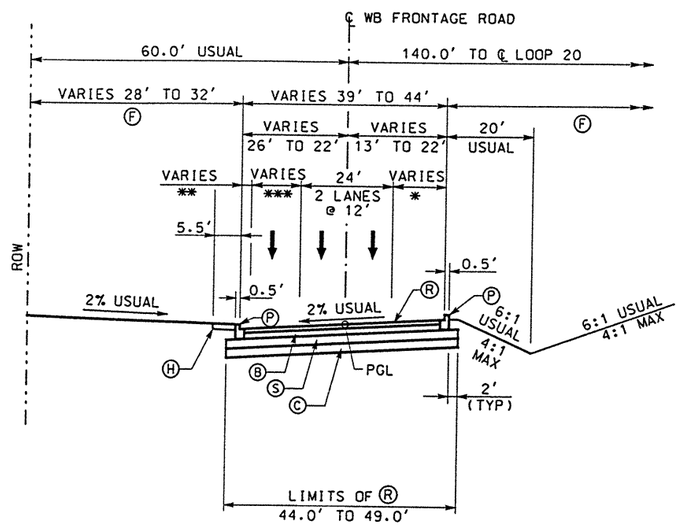

* VARIES 1' TO 10' SHOULDER
** VARIES 2' TO 10' SHOULDER
*** VARIES 12' TO 0' TRAVEL LANE

WB7

WESTBOUND FRONTAGE ROAD

NTS

STA 460+00.00 TO 463+00.00

LEGEND:

- Ⓐ CONC PAV (CONT REINF HY STL)(12")
- Ⓑ ASPH CONC PAV (TY A)(4")
- Ⓒ LIME TREATED SUBGRADE (8")
- Ⓓ SINGLE SLOPE CONCRETE BARRIER (SSCB) (TYPE 2)
- Ⓔ TYPE II MONO CURB (6")
- Ⓕ CELL FIBER MULCH SEED (PERM) (RURAL)(CLAY)
- Ⓖ CLASS B RIPRAP (4")
- Ⓗ CONC SIDEWALK (4")
- Ⓘ CONC MEDIAN (6")
- Ⓙ SINGLE SLOPE TRAFFIC RAIL(SSTR) w/ DRAIN SLOTS
- Ⓚ RETAINING WALL
- Ⓛ METAL BEAM GUARD FENCE
- Ⓜ BRICK PAVERS
- Ⓝ REMOVE ASPH CONC PAV
- Ⓞ REMOVE CONC PAV
- Ⓟ TYPE II CURB AND GUTTER (6")
- Ⓠ CONCRETE DRIVEWAYS (6")
- Ⓡ ASPH CONC PAV (TY D)(2")
- Ⓢ ASPH CONC PAV (TY A)(8")
- Ⓣ PLANE ASPH CONC PAV (0 - 1")
- Ⓤ SINGLE SLOPE TRAFFIC RAIL (SSTR)
- Ⓥ CHAINLINK FENCE (6')
- Ⓦ ROADWAY UNDERDRAIN
- Ⓧ WHEELCHAIR RAMP TYPE B

STATE OF TEXAS
CHARLES M. SHINE
62999
REGISTERED PROFESSIONAL ENGINEER

The seal appearing on this document was authorized by Charles Shine P.E. 62999, on June 3, 1999.

DATE	BY	REV	REVISION
6/3/99	DV	1	OFFSETS

© 1999 Texas Department of Transportation

Brown & Root
HOUSTON, TEXAS

LOOP 20
WESTBOUND
FRONTAGE ROAD
PROPOSED
TYPICAL SECTIONS

SHEET 7 OF 19

FED RD DIV NO	STATE PROJECT NO		SHEET NO
6	C86-14-23		15
STATE	STATE DIST NO	COUNTY	
TEXAS	22	WEBB	
CONT	SECT	JOB	HIGHWAY NO
0086	14	023	LOOP 20

SEE REVISION
REV. 6-25-99

REF FILE(S): J01LOX01.BDR, BDR LV ON = 45,47,57,60-62

D02TSX07.DGN-12 06-02-99 BAR_HO_ES05 \HCIVIL\CF0039\PHASE2

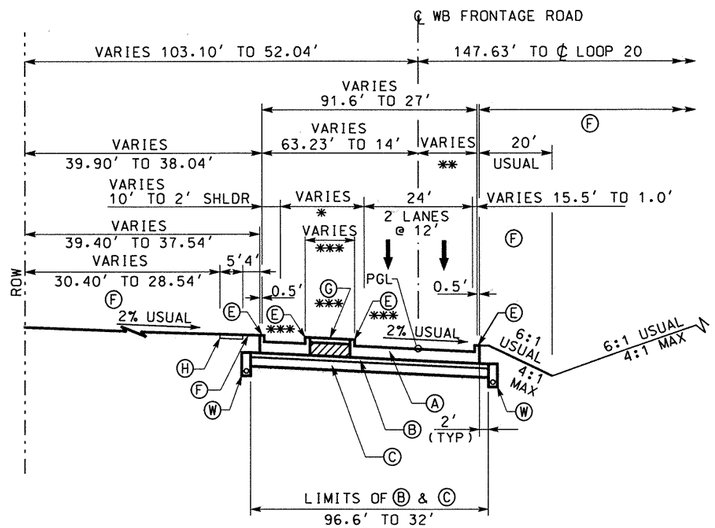

* VARIES 42.1' TO 0' RAMP/TRAVEL LANE
** VARIES 27.5' TO 13.0'
*** GORE AREA BETWEEN FM 3464 AND WB FRONTAGE RD (STA 429+13.30 TO 430.41.46)

WB1

WESTBOUND FRONTAGE ROAD

NTS

STA 429+13.30 TO 436+16.46 (BK)

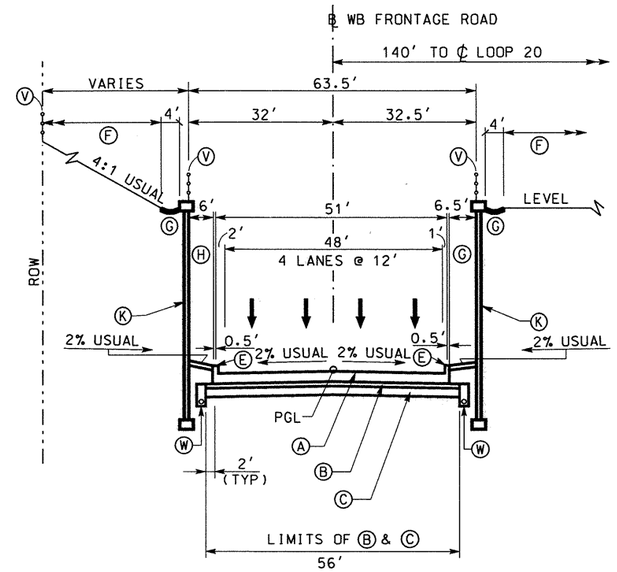

WB4

WESTBOUND FRONTAGE ROAD

NTS

STA 442+15.12 TO 444+80.00

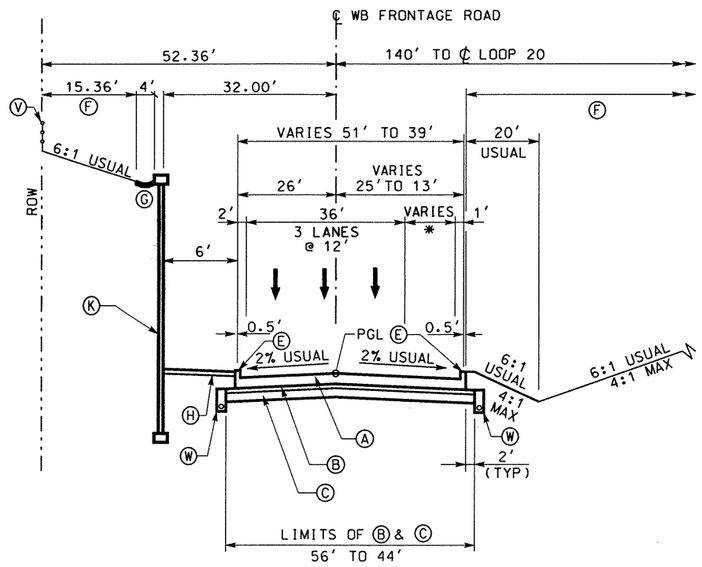

* VARIES 12' TO 0' TRAVEL LANE

WB5

WESTBOUND FRONTAGE ROAD

NTS

STA 444+80.00 TO 446+30.00

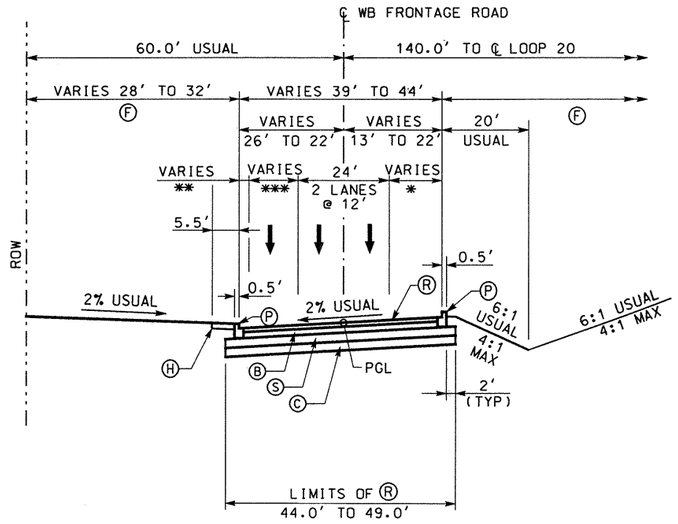

* VARIES 1' TO 10' SHOULDER
** VARIES 2' TO 10' SHOULDER
*** VARIES 12' TO 0' TRAVEL LANE

WB7

WESTBOUND FRONTAGE ROAD

NTS

STA 460+00.00 TO 463+00.00

LEGEND:

- Ⓐ CONC PAV (CONT REINF HY STL)(12")
- Ⓑ ASPH CONC PAV (TY A)(4")
- Ⓒ LIME TREATED SUBGRADE (8")
- Ⓓ SINGLE SLOPE CONCRETE BARRIER (SSCB) (TYPE 2)
- Ⓔ TYPE II MONO CURB (6")
- Ⓕ CELL FIBER MULCH SEED (PERM) (RURAL)(CLAY)
- Ⓖ CLASS B RIPRAP (4")
- Ⓗ CONC SIDEWALK (4")
- Ⓘ CONC MEDIAN (6")
- Ⓙ SINGLE SLOPE TRAFFIC RAIL(SSTR) w/ DRAIN SLOTS
- Ⓚ RETAINING WALL
- Ⓛ METAL BEAM GUARD FENCE
- Ⓜ BRICK PAVERS
- Ⓝ REMOVE ASPH CONC PAV
- Ⓞ REMOVE CONC PAV
- Ⓟ TYPE II CURB AND GUTTER (6")
- Ⓠ CONCRETE DRIVEWAYS (6")
- Ⓡ ASPH CONC PAV (TY D)(2")
- Ⓢ ASPH CONC PAV (TY A)(8")
- Ⓣ PLANE ASPH CONC PAV (0 - 1")
- Ⓤ SINGLE SLOPE TRAFFIC RAIL (SSTR)
- Ⓥ CHAINLINK FENCE (6')
- Ⓦ ROADWAY UNDERDRAIN
- Ⓧ WHEELCHAIR RAMP TYPE B

STATE OF TEXAS
CHARLES M. SHINE
62999
REGISTERED PROFESSIONAL ENGINEER

The seal appearing on this document was authorized by Charles Shine P.E. 62999, on September 30, 1999.

DATE	BY	REV	REVISION
6/3/99	DV	1	OFFSETS

© 1999 Texas Department of Transportation

Brown & Root
HOUSTON, TEXAS

LOOP 20
WESTBOUND
FRONTAGE ROAD
PROPOSED
TYPICAL SECTIONS

SHEET 7 OF 19

FED RD DIV NO	STATE PROJECT NO	SHEET NO
6	C86-14-23	15

STATE	STATE DIST NO	COUNTY
TEXAS	22	WEBB

CONT	SECT	JOB	HIGHWAY NO
0086	14	023	LOOP 20

SEE REVISION

REF FILE(S): J01LOX01.BDR, BDR LV ON = 45,47,57,60-62

D02TSX07.DGN-12 06-02-99 BAR_HO_ES05 \HCIVIL\CF0039\PHASE2

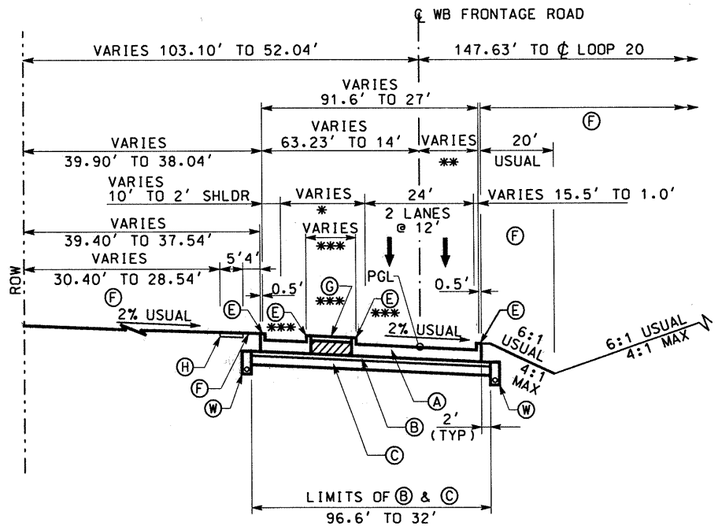

* VARIES 42.1' TO 0' RAMP/TRAVEL LANE
** VARIES 27.5' TO 13.0'
*** GORE AREA BETWEEN FM 3464 AND WB FRONTAGE RD (STA 429+13.30 TO 430.41.46)

WB1

WESTBOUND FRONTAGE ROAD

NTS

STA 429+13.30 TO 436+16.46 (BK)

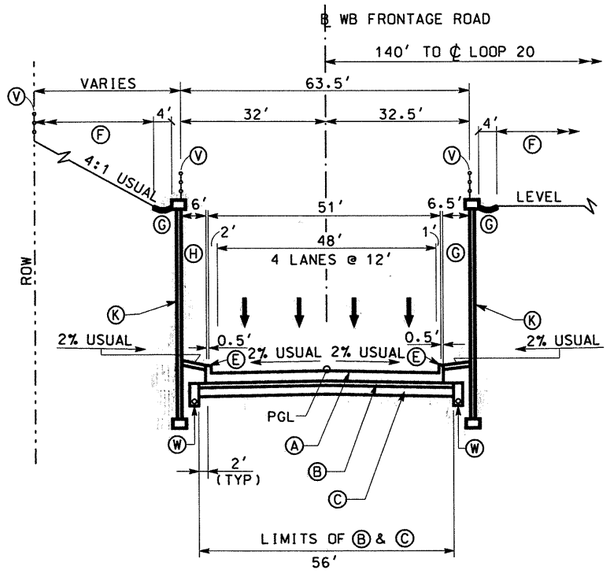

WB4

WESTBOUND FRONTAGE ROAD

NTS

STA 442+15.12 TO 444+80.00

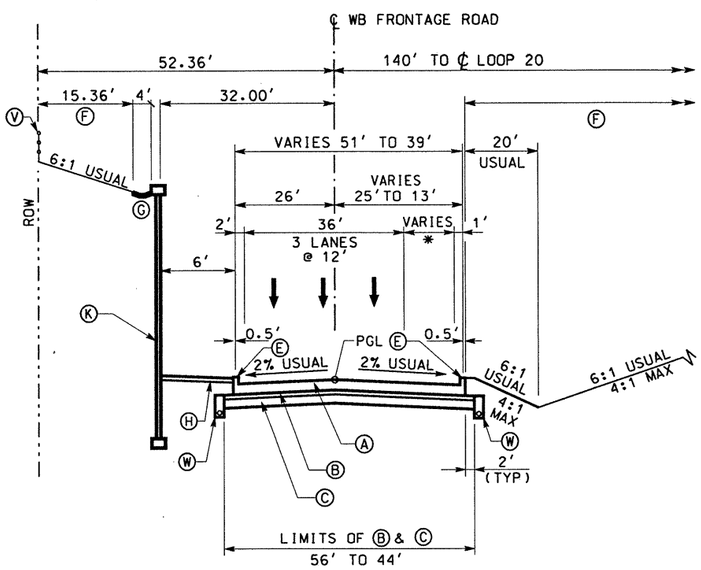

* VARIES 12' TO 0' TRAVEL LANE

WB5

WESTBOUND FRONTAGE ROAD

NTS

STA 444+80.00 TO 446+30.00

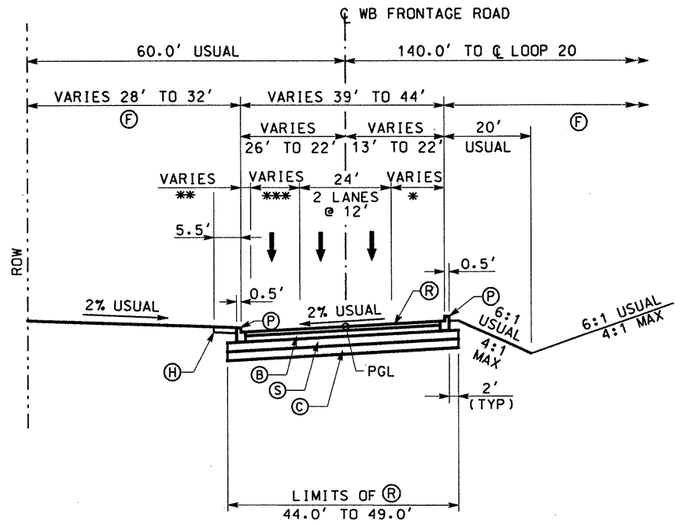

* VARIES 1' TO 10' SHOULDER
** VARIES 2' TO 10' SHOULDER
*** VARIES 12' TO 0' TRAVEL LANE

WB7

WESTBOUND FRONTAGE ROAD

NTS

STA 460+00.00 TO 463+00.00

LEGEND:

- Ⓐ CONC PAV (CONT REINF HY STL)(12")
- Ⓑ ASPH CONC PAV (TY A)(4")
- Ⓒ LIME TREATED SUBGRADE (8")
- Ⓓ SINGLE SLOPE CONCRETE BARRIER (SSCB) (TYPE 2)
- Ⓔ TYPE II MONO CURB (6")
- Ⓕ CELL FIBER MULCH SEED (PERM) (RURAL)(CLAY)
- Ⓖ CLASS B RIPRAP (4")
- Ⓗ CONC SIDEWALK (4")
- Ⓘ CONC MEDIAN (6")
- Ⓙ SINGLE SLOPE TRAFFIC RAIL(SSTR) w/ DRAIN SLOTS
- Ⓚ RETAINING WALL
- Ⓛ METAL BEAM GUARD FENCE
- Ⓜ BRICK PAVERS
- Ⓝ REMOVE ASPH CONC PAV
- Ⓞ REMOVE CONC PAV
- Ⓟ TYPE II CURB AND GUTTER (6")
- Ⓠ CONCRETE DRIVEWAYS (6")
- Ⓡ ASPH CONC PAV (TY D)(2")
- Ⓢ ASPH CONC PAV (TY A)(8")
- Ⓣ PLANE ASPH CONC PAV (0 - 1")
- Ⓤ SINGLE SLOPE TRAFFIC RAIL (SSTR)
- Ⓥ CHAINLINK FENCE (6')
- Ⓦ ROADWAY UNDERDRAIN
- Ⓧ WHEELCHAIR RAMP TYPE B

STATE OF TEXAS
CHARLES M. SHINE
62999
REGISTERED PROFESSIONAL ENGINEER

The seal appearing on this document was authorized by Charles Shine P.E. 62999, on September 30, 1999.

DATE	BY	REV	REVISION
6/3/99	DV	1	OFFSETS
09/29/99	DV	2	RETAINING WALL "B" & "H"

© 1999 Texas Department of Transportation

Brown & Root
HOUSTON, TEXAS

LOOP 20
WESTBOUND
FRONTAGE ROAD
PROPOSED
TYPICAL SECTIONS

SHEET 7 OF 19

FED RD DIV NO	STATE PROJECT NO		SHEET NO
6	C86-14-23		15
STATE	STATE DIST NO	COUNTY	
TEXAS	22	WEBB	
CONT	SECT	JOB	HIGHWAY NO
0086	14	023	LOOP 20

REF FILE(S): J01LOX01.BDR, BDR LV ON = 45,47,57,60-62

06-02-99 BAR_HO_ES05 \HCIVIL\CF0039\PHASE2 D02TSX07.DGN-12

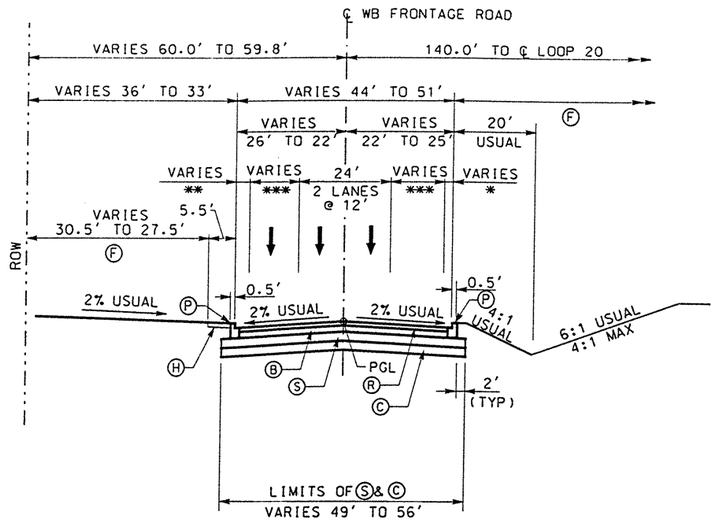

* VARIES 10' TO 1' SHOULDER
** VARIES 10' TO 2' SHOULDER
*** VARIES 0' TO 12' TRAVEL LANE

WB9

WESTBOUND FRONTAGE ROAD

NTS

STA 491+30.00 TO 493+40.00

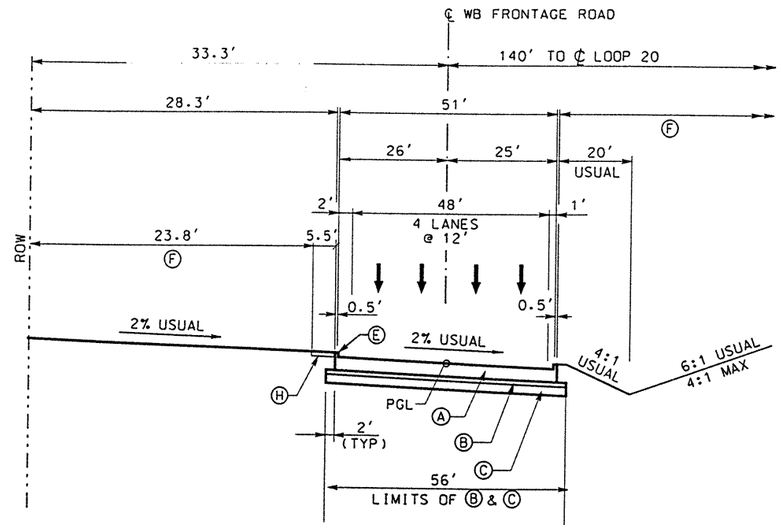

WB10

WESTBOUND FRONTAGE ROAD

NTS

STA 493+40.00 TO 496+28.10
STA 499+40.14 TO 500+70.00

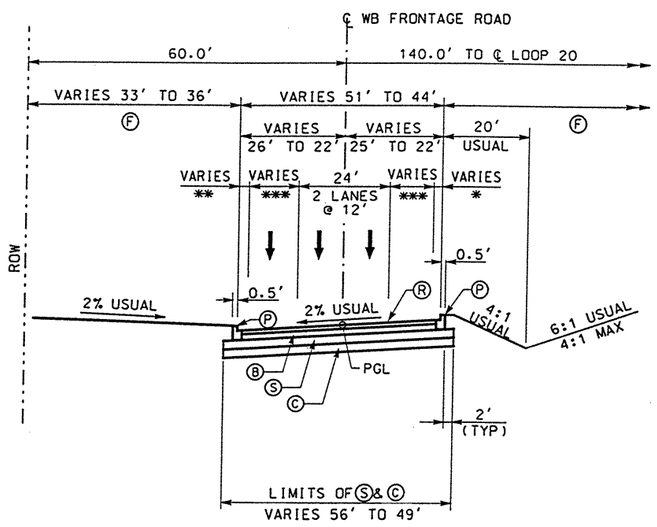

* VARIES 1' TO 10' SHOULDER
** VARIES 2' TO 10' SHOULDER
*** VARIES 12' TO 0' TRAVEL LANE

WB11

WESTBOUND FRONTAGE ROAD

NTS

STA 500+70.00 TO 503+15.00

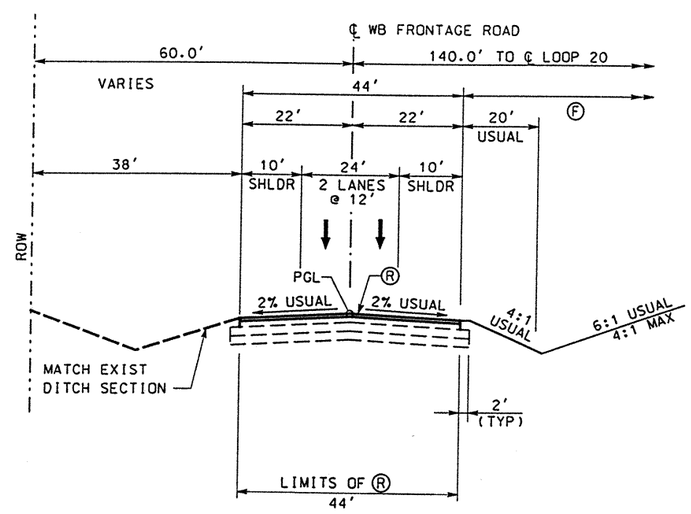

WB12

WESTBOUND FRONTAGE ROAD

NTS

STA 503+15.00 TO 513+60.00

LEGEND:

- Ⓐ CONC PAV (CONT REINF HY STL)(12")
- Ⓑ ASPH CONC PAV (TY A)(4")
- Ⓒ LIME TREATED SUBGRADE (8")
- Ⓓ SINGLE SLOPE CONCRETE BARRIER (SSCB) (TYPE 2)
- Ⓔ TYPE II MONO CURB (6")
- Ⓕ CELL FIBER MULCH SEED (PERM) (RURAL)(CLAY)
- Ⓖ CLASS B RIPRAP (4")
- Ⓗ CONC SIDEWALK (4")
- Ⓘ CONC MEDIAN (6")
- Ⓙ SINGLE SLOPE TRAFFIC RAIL(SSTR) w/ DRAIN SLOTS
- Ⓚ RETAINING WALL
- Ⓛ METAL BEAM GUARD FENCE
- Ⓜ BRICK PAVERS
- Ⓝ REMOVE ASPH CONC PAV
- Ⓞ REMOVE CONC PAV
- Ⓟ TYPE II CURB AND GUTTER (6")
- Ⓠ CONCRETE DRIVEWAYS (6")
- Ⓡ ASPH CONC PAV (TY D)(2")
- Ⓢ ASPH CONC PAV (TY A)(8")
- Ⓣ PLANE ASPH CONC PAV (0 - 1")
- Ⓤ SINGLE SLOPE TRAFFIC RAIL (SSTR)
- Ⓥ CHAINLINK FENCE (6')
- Ⓦ ROADWAY UNDERDRAIN
- Ⓧ WHEELCHAIR RAMP TYPE B

STATE OF TEXAS
CHARLES M. SHINE
62999
REGISTERED
PROFESSIONAL ENGINEER

The seal appearing on this document was authorized by Charles Shine P.E. 62999, on June 3, 1999.

DATE	BY	REV	REVISION
6/3/99	DV	1	OFFSETS

© 1999 Texas Department of Transportation

Brown & Root
HOUSTON, TEXAS

LOOP 20

WESTBOUND FRONTAGE ROAD PROPOSED TYPICAL SECTIONS

SHEET 8 OF 19

FED RD DIV NO	STATE PROJECT NO		SHEET NO
6	C86-14-23		16
STATE	STATE DIST NO	COUNTY	
TEXAS	22	WEBB	
CONT	SECT	JOB	HIGHWAY NO
0086	14	023	LOOP 20

REV. 6-25-99

REF FILE(S): J01LOX01.BDR. BDR LV ON = 45.47.57.60-62

D021SX08.DGN-14 06-02-99 BAR_HO_ES05 \HCIVIL\CF0039\PHASE2

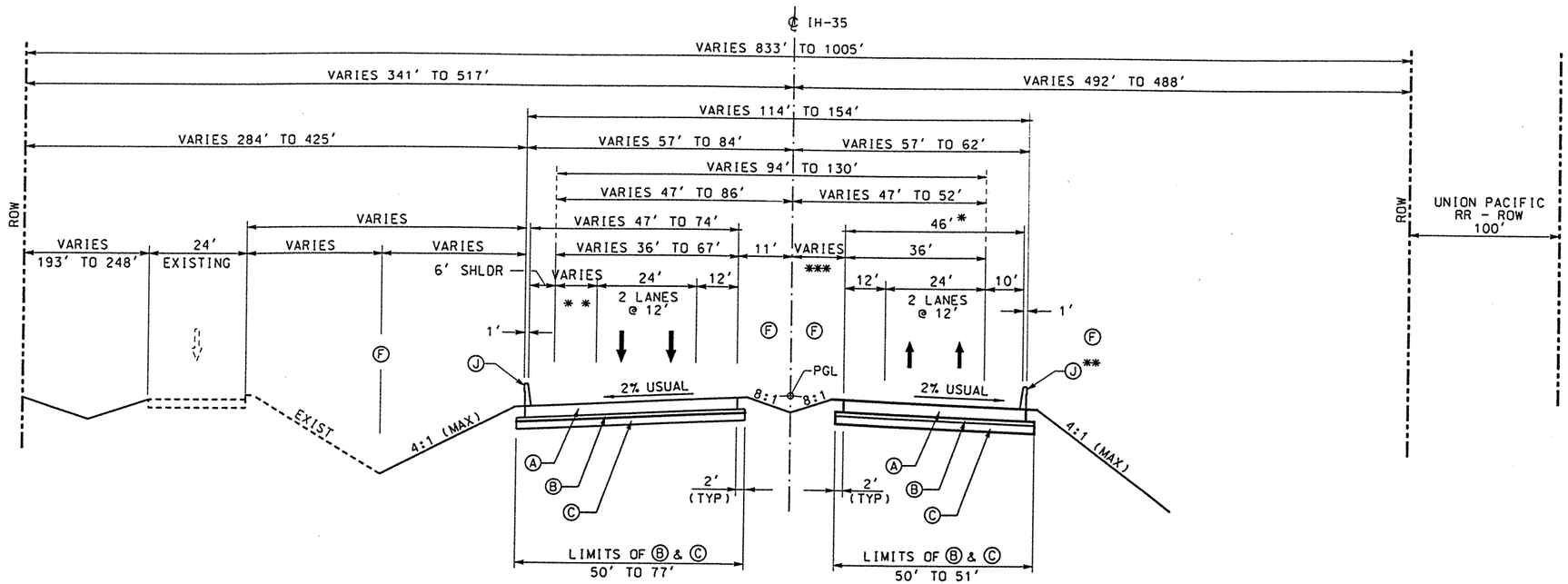

* 46' WIDTH STA 116+35.00 TO 121+00. 47' WIDTH STA 121+00 TO 125+00
** Ⓙ BEGINS STA 121+00
*** 11' STA 116+35.00 TO STA 119+50.00
TRANSITIONS 11' TO 16' STA 119+50.00 TO 124+50.00
16' STA 124+50.00 TO 125+00.00

** VARIES 0' TO 31' RAMP/TRAVEL LANE

S3
STA 114+00.00 TO 119+19.00

N4
STA 116+35.00 TO STA 125+00.00
STA 158+08.21 TO STA 159+24.00

PROPOSED TYPICAL SECTION
NTS

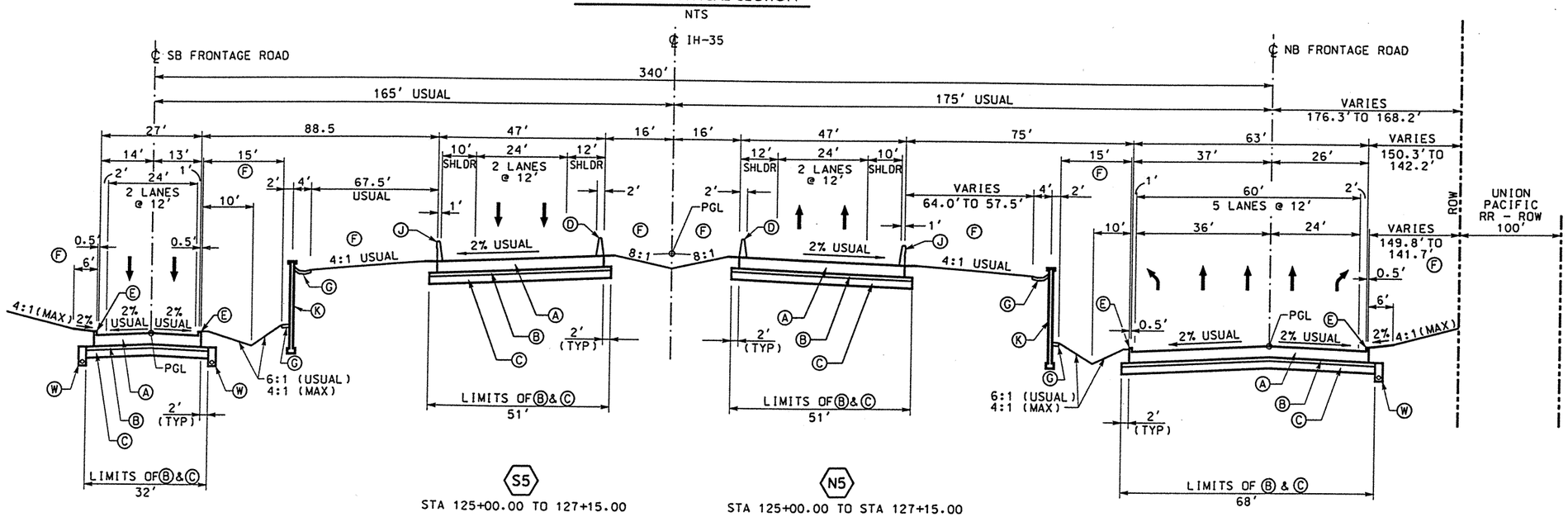

SB3
STA 125+94.70 TO 127+61.19

S5
STA 125+00.00 TO 127+15.00

N5
STA 125+00.00 TO STA 127+15.00

NB5
STA 126+55.00 TO 127+82.68

PROPOSED TYPICAL SECTION
NTS

REV. 6-25-99

LEGEND:

- Ⓐ CONC PAV (CONT REINF HY STL)(12")
- Ⓑ ASPH CONC PAV (TY A)(4")
- Ⓒ LIME TREATED SUBGRADE (8")
- Ⓓ SINGLE SLOPE CONCRETE BARRIER (SSCB) (TYPE 2)
- Ⓔ TYPE II MONO CURB (6")
- Ⓕ CELL FIBER MULCH SEED (PERM) (RURAL)(CLAY)
- Ⓖ CLASS B RIPRAP (4")
- Ⓗ CONC SIDEWALK (4")
- Ⓘ CONC MEDIAN (6")
- Ⓙ SINGLE SLOPE TRAFFIC RAIL(SSTR) w/ DRAIN SLOTS
- Ⓚ RETAINING WALL
- Ⓛ METAL BEAM GUARD FENCE
- Ⓜ BRICK PAVERS
- Ⓝ REMOVE ASPH CONC PAV
- Ⓞ REMOVE CONC PAV
- Ⓟ TYPE II CURB AND GUTTER (6")
- Ⓠ CONCRETE DRIVEWAYS (6")
- Ⓡ ASPH CONC PAV (TY D)(2")
- Ⓢ ASPH CONC PAV (TY A)(8")
- Ⓣ PLANE ASPH CONC PAV (0 - 1")
- Ⓤ SINGLE SLOPE TRAFFIC RAIL (SSTR)
- Ⓥ CHAINLINK FENCE (6')
- Ⓦ ROADWAY UNDERDRAIN
- Ⓧ WHEELCHAIR RAMP TYPE B

STATE OF TEXAS
CHARLES M. SHINE
62999
REGISTERED PROFESSIONAL ENGINEER

The seal appearing on this document was authorized by Charles Shine P.E. 62999, on June 3, 1999.

DATE	BY	REV	REVISION
6/3/99	DV	1	OFFSETS

© 1999 Texas Department of Transportation

Brown & Root
HOUSTON, TEXAS

IH 35

PROPOSED TYPICAL SECTIONS

SHEET 9 OF 19

FED RD DIV NO	STATE PROJECT NO	SHEET NO
6	NH-99(462)	17

STATE	STATE DIST NO	COUNTY
TEXAS	22	WEBB

CONT	SECT	JOB	HIGHWAY NO
0018	06	131	IH 35

REF FILE(S): J01LOX01.BDR. BDR LV ON = 45.47.57.60-62

D02TSX09.DGN-15 06-03-99 BAR_HO_ES05 \HCWIL\CF0039\PHASE2

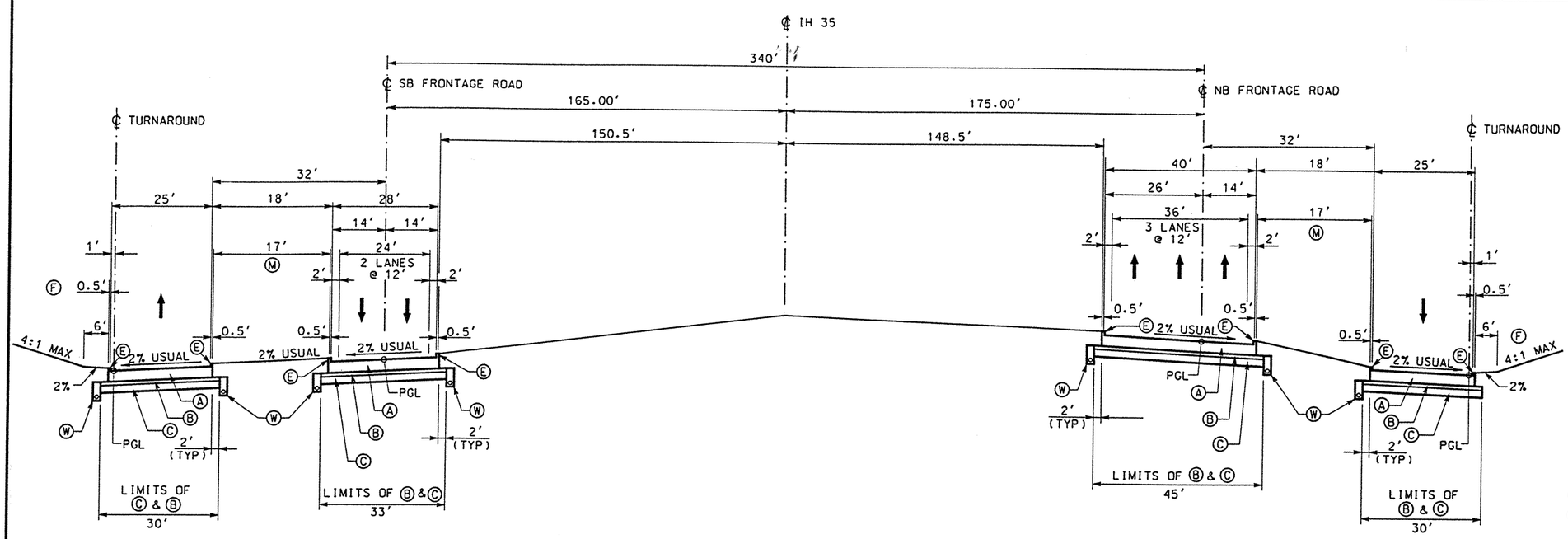

SB4

SOUTHBOUND FRONTAGE ROAD

NTS

STA 130+13.49 TO 131+06.77

NB6

NORTHBOUND FRONTAGE ROAD

NTS

STA 130+13.69 TO 131+06.97

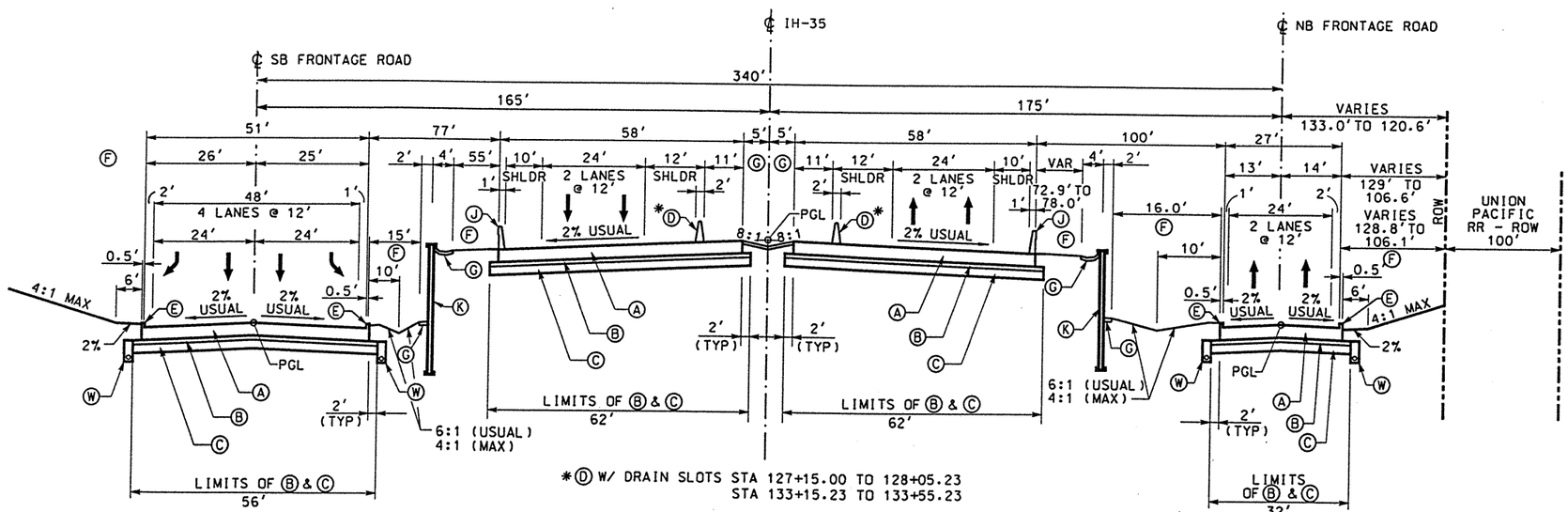

SB5

STA 133+46.45 TO 135+75.00

S6

STA 127+15.00 TO 128+05.23
STA 133+15.23 TO 133+55.23

N6

STA 127+15.00 TO 128+05.23
STA 133+15.23 TO 133+55.23

NB7

STA 133+38.00 TO 135+33.34

PROPOSED TYPICAL SECTION

NTS

LEGEND:

- Ⓐ CONC PAV (CONT REINF HY STL)(12")
- Ⓑ ASPH CONC PAV (TY A)(4")
- Ⓒ LIME TREATED SUBGRADE (8")
- Ⓓ SINGLE SLOPE CONCRETE BARRIER (SSCB) (TYPE 2)
- Ⓔ TYPE II MONO CURB (6")
- Ⓕ CELL FIBER MULCH SEED (PERM) (RURAL)(CLAY)
- Ⓖ CLASS B RIPRAP (4")
- Ⓗ CONC SIDEWALK (4")
- Ⓘ CONC MEDIAN (6")
- Ⓙ SINGLE SLOPE TRAFFIC RAIL(SSTR) w/ DRAIN SLOTS
- Ⓚ RETAINING WALL
- Ⓛ METAL BEAM GUARD FENCE
- Ⓜ BRICK PAVERS
- Ⓝ REMOVE ASPH CONC PAV
- Ⓞ REMOVE CONC PAV
- Ⓟ TYPE II CURB AND GUTTER (6")
- Ⓠ CONCRETE DRIVEWAYS (6")
- Ⓡ ASPH CONC PAV (TY D)(2")
- Ⓢ ASPH CONC PAV (TY A)(8")
- Ⓣ PLANE ASPH CONC PAV (0 - 1")
- Ⓤ SINGLE SLOPE TRAFFIC RAIL (SSTR)
- Ⓥ CHAINLINK FENCE (6')
- Ⓦ ROADWAY UNDERDRAIN
- Ⓧ WHEELCHAIR RAMP TYPE B

STATE OF TEXAS
CHARLES M. SHINE
62999
REGISTERED PROFESSIONAL ENGINEER

The seal appearing on this document was authorized by Charles Shine P.E. 62999, on June 3, 1999.

DATE	BY	REV	REVISION
06/03/99	DV	1	OFFSETS

© 1999 Texas Department of Transportation

Brown & Root
HOUSTON, TEXAS

IH 35

PROPOSED TYPICAL SECTIONS

SHEET 10 OF 19

FED RD DIV NO	STATE PROJECT NO	SHEET NO
6	NH-99(462)	18

STATE	STATE DIST NO	COUNTY
TEXAS	22	WEBB

CONT	SECT	JOB	HIGHWAY NO
0018	06	131	IH 35

REV. 6-25-99

REF FILE(S): J01LOX01.BDR, BDR LV ON = 45,47,57,60-62

D021SX10.DGN-12 06-02-99 BAR_HO_ES05 \HCIVIL\CF0039\PHASE2

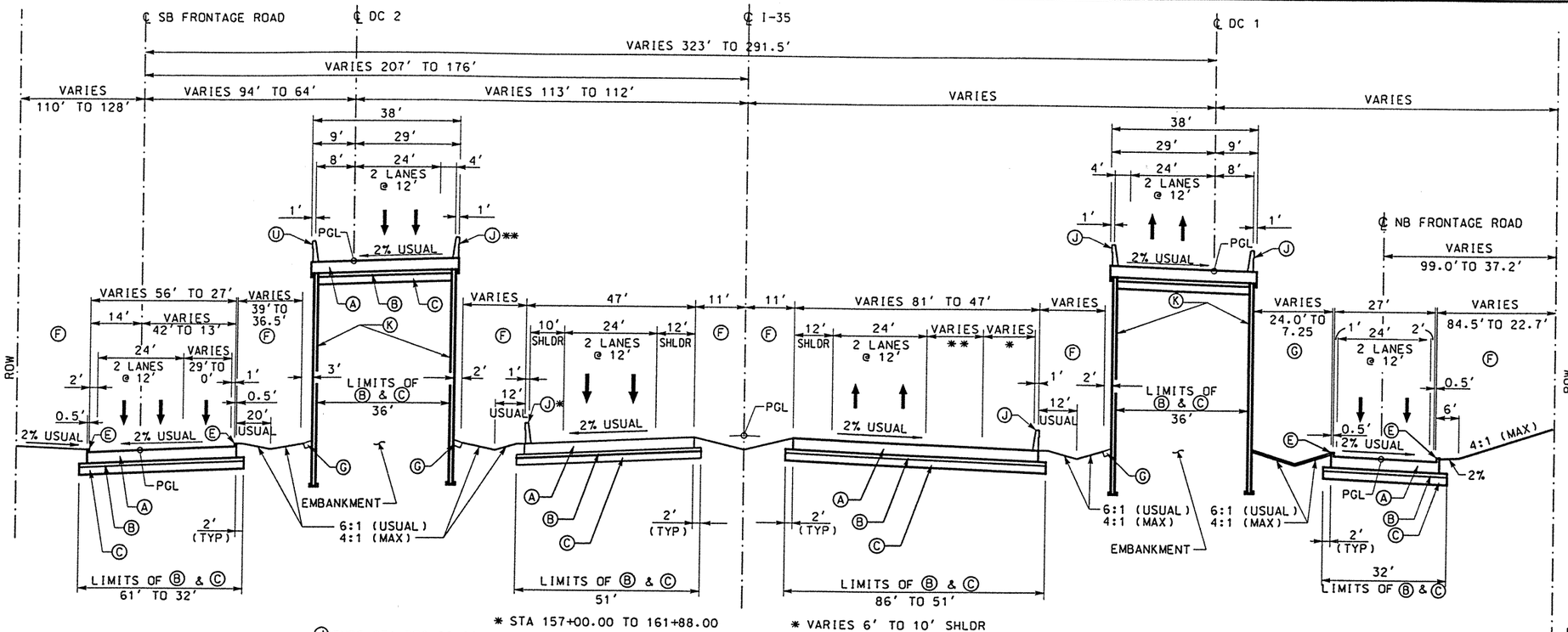

LEGEND:

- Ⓐ CONC PAV (CONT REINF HY STL)(12")
- Ⓑ ASPH CONC PAV (TY A)(4")
- Ⓒ LIME TREATED SUBGRADE (8")
- Ⓓ SINGLE SLOPE CONCRETE BARRIER (SSCB) (TYPE 2)
- Ⓔ TYPE II MONO CURB (6")
- Ⓕ CELL FIBER MULCH SEED (PERM) (RURAL)(CLAY)
- Ⓖ CLASS B RIPRAP (4")
- Ⓗ CONC SIDEWALK (4")
- Ⓘ CONC MEDIAN (6")
- Ⓙ SINGLE SLOPE TRAFFIC RAIL(SSTR) w/ DRAIN SLOTS
- Ⓚ RETAINING WALL
- Ⓛ METAL BEAM GUARD FENCE
- Ⓜ BRICK PAVERS
- Ⓝ REMOVE ASPH CONC PAV
- Ⓞ REMOVE CONC PAV
- Ⓟ TYPE II CURB AND GUTTER (6")
- Ⓠ CONCRETE DRIVEWAYS (6")
- Ⓡ ASPH CONC PAV (TY D)(2")
- Ⓢ ASPH CONC PAV (TY A)(8")
- Ⓣ PLANE ASPH CONC PAV (0 - 1")
- Ⓤ SINGLE SLOPE TRAFFIC RAIL (SSTR)
- Ⓥ CHAINLINK FENCE (6')
- Ⓦ ROADWAY UNDERDRAIN
- Ⓧ WHEELCHAIR RAMP TYPE B

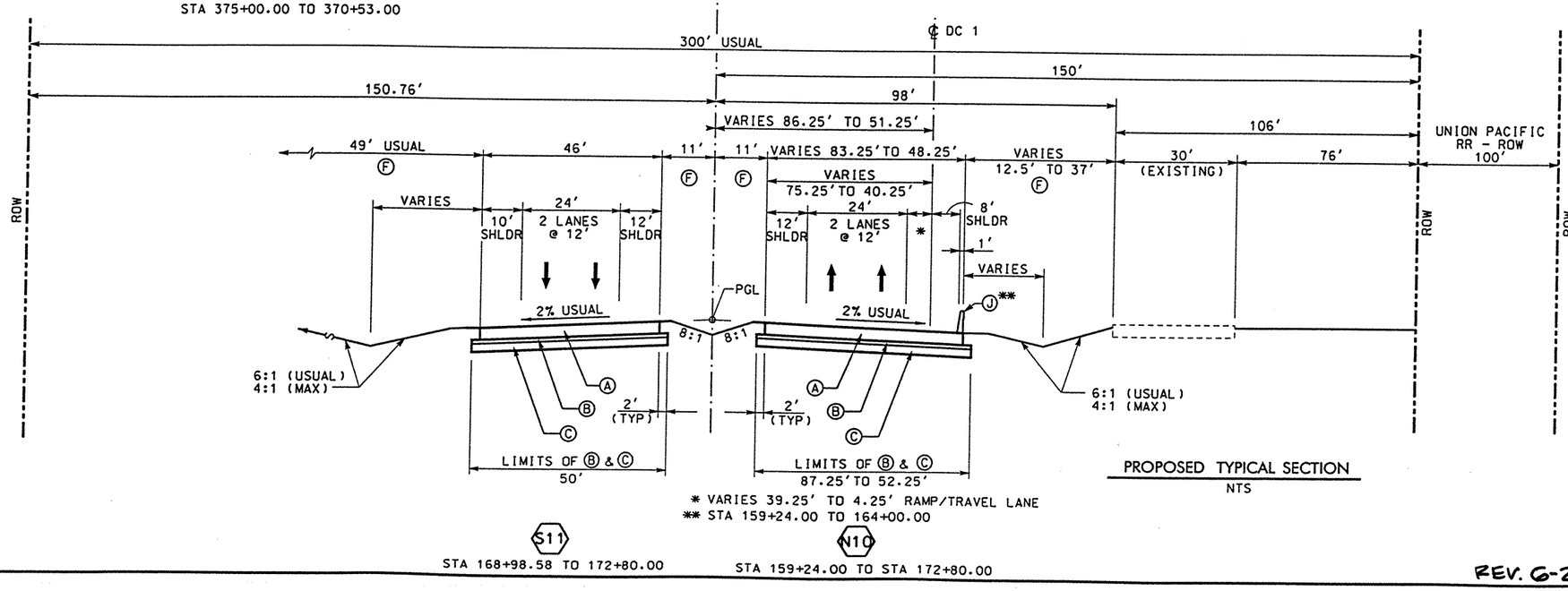

PROPOSED TYPICAL SECTION
NTS

REV. 6-25-99

STATE OF TEXAS
CHARLES M. SHINE
P.E. 62999
REGISTERED PROFESSIONAL ENGINEER

The seal appearing on this document was authorized by Charles Shine P.E. 62999, on June 3, 1999.

DATE	BY	REV	REVISION
06/03/99	DV	1	OFFSETS

© 1999 Texas Department of Transportation

Brown & Root
HOUSTON, TEXAS

IH 35

PROPOSED
TYPICAL SECTIONS

SHEET 11 OF 19

FED RD DIV NO	STATE PROJECT NO	SHEET NO
6	NH-99(462)	19

STATE	STATE DIST NO	COUNTY
TEXAS	22	WEBB

CONT	SECT	JOB	HIGHWAY NO
0018	06	131	IH 35

REF FILE(S): J01LOX01.BDR, BDR LV ON = 45,47,57,60-62

D027SX11.DGN-13 06-02-99 BAR_HO_ES05 \HCIVIL\CF0039\PHASE2

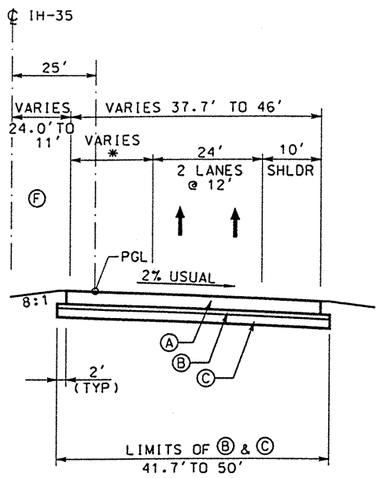

* VARIES 4' TO 12' SHOULDER

N1

NORTHBOUND MAINLANES IH-35

NTS

STA 106+60.00 TO 110+50.00

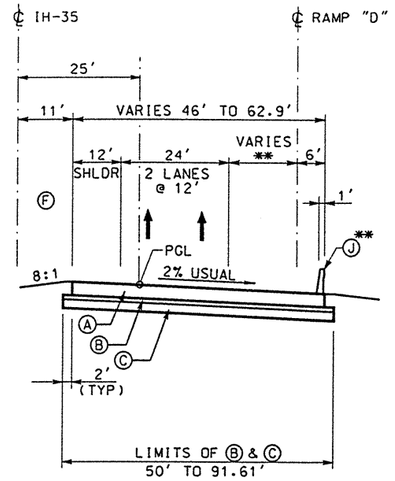

* VARIES 0' TO 20.9' RAMP/TRAVEL LANE
** Ⓙ BEGIN STA 113+50.51

N2

NORTHBOUND MAINLANES IH-35

NTS

STA 110+50.00 TO 114+00.00

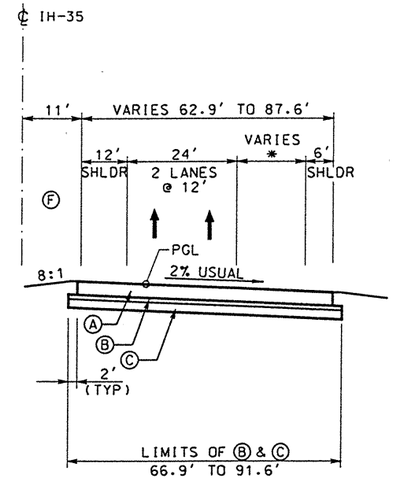

* VARIES 20.9' TO 45.7' RAMP/TRAVEL LANE

N3

NORTHBOUND MAINLANES IH-35

NTS

STA 114+00.00 TO 116+35.00

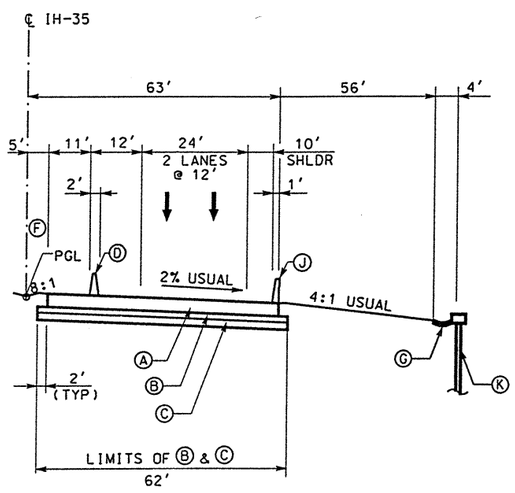

N7

SOUTHBOUND MAIN LANES I-35

NTS

STA 133+55.23 TO 134+05.00

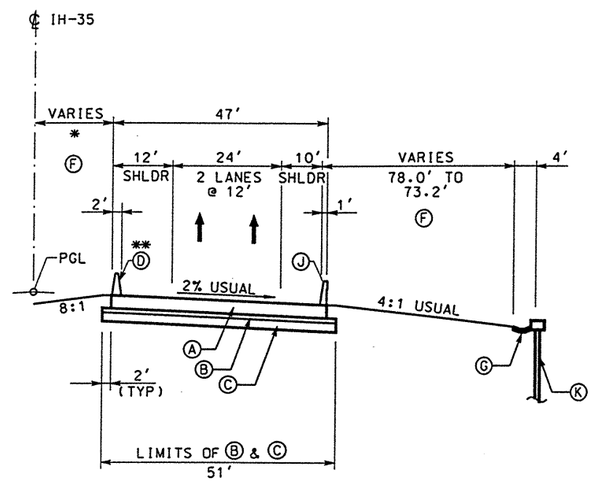

* 16.0' STA 134+05.00 TO 139+00.00
TRANSITION 16.0' TO 11.0' STA 139+00.00 TO 144+00.00
11.0' STA 144+00.00 TO 144+95.00
** Ⓓ STA 134+05.00 TO STA 139+00.00

N8

NORTHBOUND MAINLANES IH-35

NTS

STA 134+05.00 TO 144+95.00

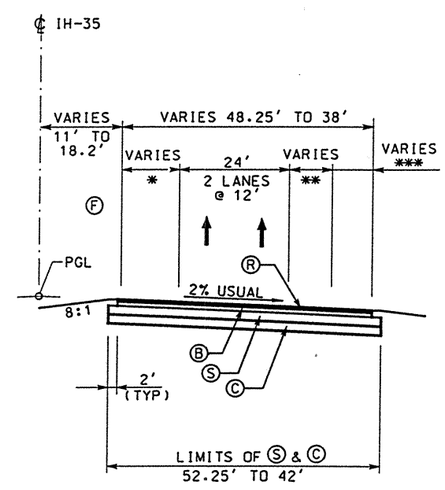

* VARIES 12' TO 4' SHOULDER
** VARIES 4.25' TO 0.0' RAMP/TRAVEL LANE
STA 173+51.90 TO 175+00.00
*** VARIES 8' TO 10' SHOULDER

N11

NORTHBOUND MAINLANES IH-35

NTS

STA 172+80.00 TO 175+58.00

REV. 6-25-99

LEGEND:

- Ⓐ CONC PAV (CONT REINF HY STL)(12")
- Ⓑ ASPH CONC PAV (TY A)(4")
- Ⓒ LIME TREATED SUBGRADE (8")
- Ⓓ SINGLE SLOPE CONCRETE BARRIER (SSCB) (TYPE 2)
- Ⓔ TYPE II MONO CURB (6")
- Ⓕ CELL FIBER MULCH SEED (PERM) (RURAL)(CLAY)
- Ⓖ CLASS B RIPRAP (4")
- Ⓗ CONC SIDEWALK (4")
- Ⓘ CONC MEDIAN (6")
- Ⓙ SINGLE SLOPE TRAFFIC RAIL(SSTR) w/ DRAIN SLOTS
- Ⓚ RETAINING WALL
- Ⓛ METAL BEAM GUARD FENCE
- Ⓜ BRICK PAVERS
- Ⓝ REMOVE ASPH CONC PAV
- Ⓞ REMOVE CONC PAV
- Ⓟ TYPE II CURB AND GUTTER (6")
- Ⓠ CONCRETE DRIVEWAYS (6")
- Ⓡ ASPH CONC PAV (TY D)(2")
- Ⓢ ASPH CONC PAV (TY A)(8")
- Ⓣ PLANE ASPH CONC PAV (0 - 1")
- Ⓤ SINGLE SLOPE TRAFFIC RAIL (SSTR)
- Ⓥ CHAINLINK FENCE (6')
- Ⓦ ROADWAY UNDERDRAIN
- Ⓧ WHEELCHAIR RAMP TYPE B

STATE OF TEXAS
CHARLES M. SHINE
62999
REGISTERED PROFESSIONAL ENGINEER

The seal appearing on this document was authorized by Charles Shine P.E. 62999, on June 3, 1999

DATE	BY	REV	REVISION
06/03/99	DV	1	OFFSETS

© 1999 Texas Department of Transportation

Brown & Root
HOUSTON, TEXAS

IH 35

PROPOSED
TYPICAL SECTIONS

SHEET 12 OF 19

FED RD DIV NO	STATE PROJECT NO		SHEET NO
6	NH-99(462)		20
STATE	STATE DIST NO	COUNTY	
TEXAS	22	WEBB	
CONT	SECT	JOB	HIGHWAY NO
0018	06	131	IH 35

REF FILE(S): J01LOX01.BDR; BDR LV ON = 45.47.57.60-62

D02TSX12.DGN-14 06-02-99 BAR_HO_ES05 \HCIVIL\CF0039\PHASE2

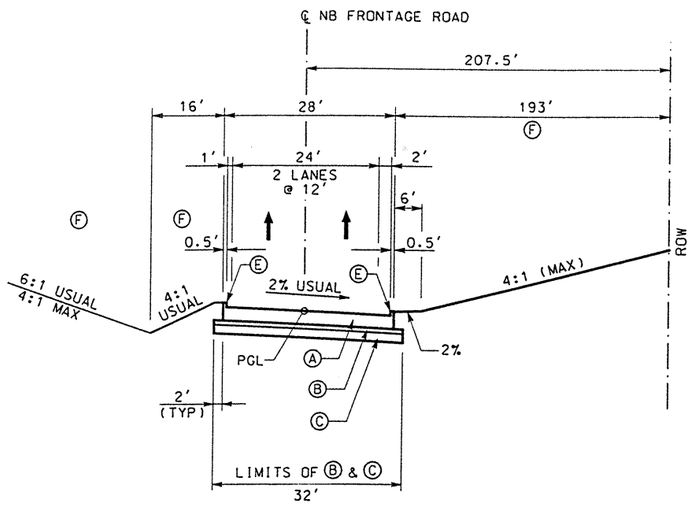

NB1

NORTHBOUND FRONTAGE ROAD

NTS

STA 121+50.00 TO 121+61.45

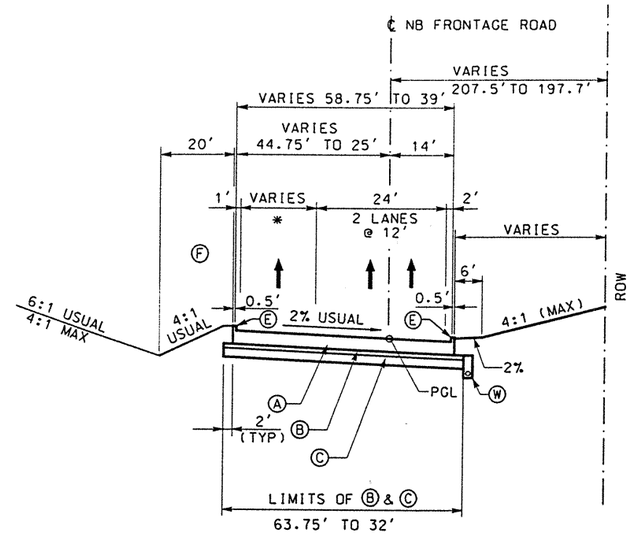

* VARIES 31.75' TO 12' RAMP/TRAVEL LANE

NB2

NORTHBOUND FRONTAGE ROAD

NTS

STA 121+61.45 TO 124+13.24

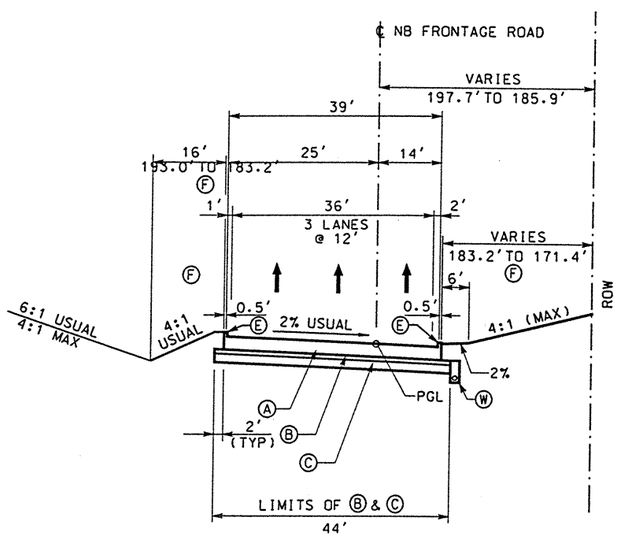

NB3

NORTHBOUND FRONTAGE ROAD

NTS

STA 124+13.24 TO 125+05.00

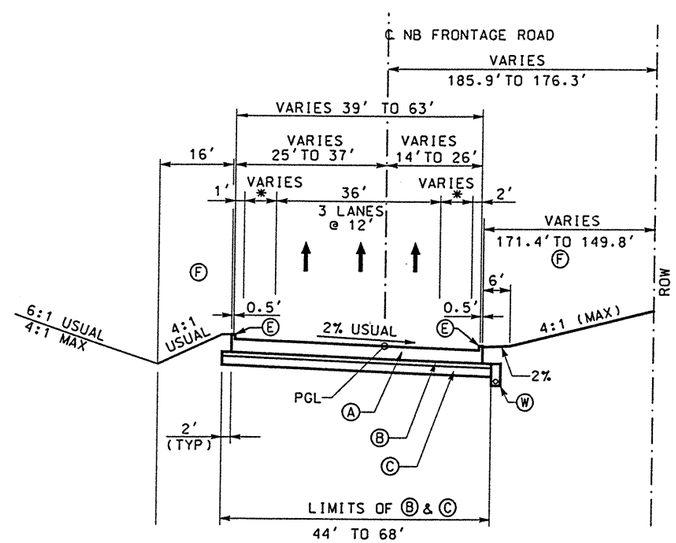

* VARIES 0' TO 12' TRAVEL LANE

NB4

NORTHBOUND FRONTAGE ROAD

NTS

STA 125+05.00 TO 126+55.00

LEGEND:

- Ⓐ CONC PAV (CONT REINF HY STL)(12")
- Ⓑ ASPH CONC PAV (TY A)(4")
- Ⓒ LIME TREATED SUBGRADE (8")
- Ⓓ SINGLE SLOPE CONCRETE BARRIER (SSCB) (TYPE 2)
- Ⓔ TYPE II MONO CURB (6")
- Ⓕ CELL FIBER MULCH SEED (PERM) (RURAL)(CLAY)
- Ⓖ CLASS B RIPRAP (4")
- Ⓗ CONC SIDEWALK (4")
- Ⓘ CONC MEDIAN (6")
- Ⓙ SINGLE SLOPE TRAFFIC RAIL(SSTR) w/ DRAIN SLOTS
- Ⓚ RETAINING WALL
- Ⓛ METAL BEAM GUARD FENCE
- Ⓜ BRICK PAVERS
- Ⓝ REMOVE ASPH CONC PAV
- Ⓞ REMOVE CONC PAV
- Ⓟ TYPE II CURB AND GUTTER (6")
- Ⓠ CONCRETE DRIVEWAYS (6")
- Ⓡ ASPH CONC PAV (TY D)(2")
- Ⓢ ASPH CONC PAV (TY A)(8")
- Ⓣ PLANE ASPH CONC PAV (0 - 1")
- Ⓤ SINGLE SLOPE TRAFFIC RAIL (SSTR)
- Ⓥ CHAINLINK FENCE (6')
- Ⓦ ROADWAY UNDERDRAIN
- Ⓧ WHEELCHAIR RAMP TYPE B

STATE OF TEXAS
CHARLES M. SHINE
62999
REGISTERED PROFESSIONAL ENGINEER

The seal appearing on this document was authorized by Charles Shine P.E. 62999, on June 3, 1999.

DATE	BY	REV	REVISION
6/3/99	DV	1	OFFSETS

© 1999 Texas Department of Transportation

Brown & Root
HOUSTON, TEXAS

IH 35

PROPOSED
TYPICAL SECTIONS

SHEET 13 OF 19

FED RD DIV NO	STATE PROJECT NO		SHEET NO
6	NH-99(462)		21
STATE	STATE DIST NO	COUNTY	
TEXAS	22	WEBB	
CONT	SECT	JOB	HIGHWAY NO
0018	06	131	IH 35

REV. 6-25-99

REF FILE(S): J01LOX01.BDR, BDR LV ON = 45.47.57.60-62

D021SX13.DGN-11 06-02-99 BAR_HO_ES05 \HCIVIL\CF0039\PHASE2

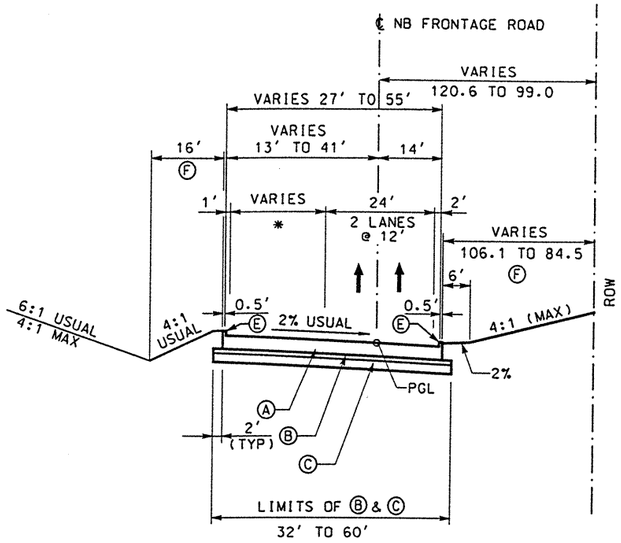

* VARIES 0' TO 28' RAMP/TRAVEL LANE

NB8

NORTHBOUND FRONTAGE ROAD

NTS

STA 135+33.34 TO 138+74.17

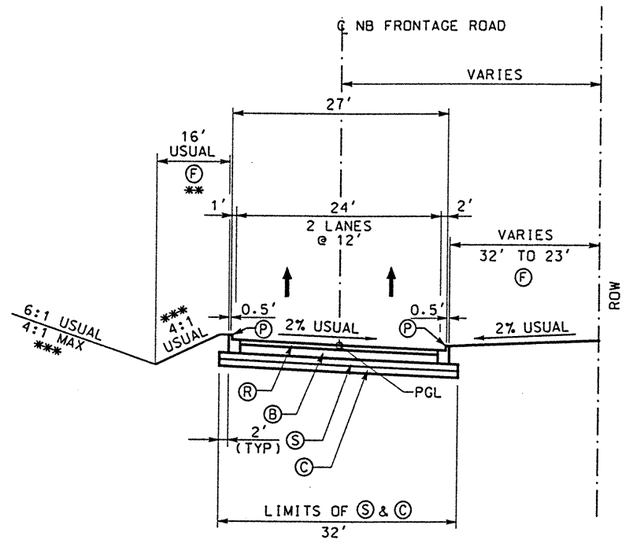

* VARIES 0' TO 28' RAMP/TRAVEL LANE

NB10

NORTHBOUND FRONTAGE ROAD

NTS

STA 147+00.00 TO 167+20.00

** CLASS B RIPRAP (4")
(STA 153+20 TO STA 159+50)

*** 2:1 MAX RIPRAP SLOPE

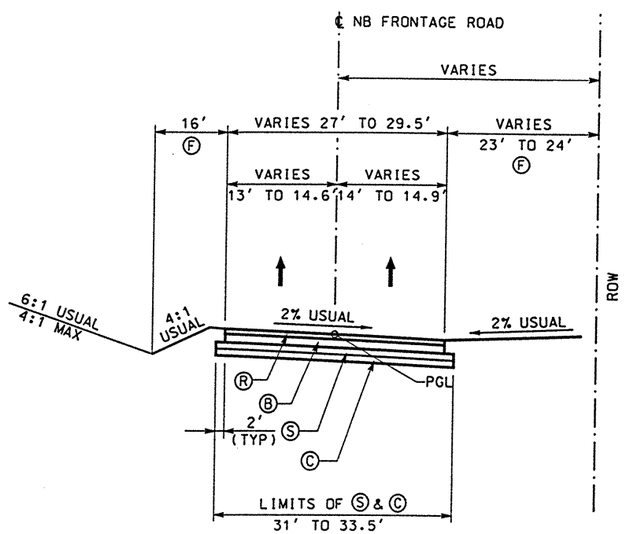

NB11

NORTHBOUND FRONTAGE ROAD

NTS

STA 167+20.00 TO 168+70.00

LEGEND:

- (A) CONC PAV (CONT REINF HY STL)(12")
- (B) ASPH CONC PAV (TY A)(4")
- (C) LIME TREATED SUBGRADE (8")
- (D) SINGLE SLOPE CONCRETE BARRIER (SSCB) (TYPE 2)
- (E) TYPE II MONO CURB (6")
- (F) CELL FIBER MULCH SEED (PERM) (RURAL)(CLAY)
- (G) CLASS B RIPRAP (4")
- (H) CONC SIDEWALK (4")
- (I) CONC MEDIAN (6")
- (J) SINGLE SLOPE TRAFFIC RAIL(SSTR) w/ DRAIN SLOTS
- (K) RETAINING WALL
- (L) METAL BEAM GUARD FENCE
- (M) BRICK PAVERS
- (N) REMOVE ASPH CONC PAV
- (O) REMOVE CONC PAV
- (P) TYPE II CURB AND GUTTER (6")
- (Q) CONCRETE DRIVEWAYS (6")
- (R) ASPH CONC PAV (TY D)(2")
- (S) ASPH CONC PAV (TY A)(8")
- (T) PLANE ASPH CONC PAV (0 - 1")
- (U) SINGLE SLOPE TRAFFIC RAIL (SSTR)
- (V) CHAINLINK FENCE (6')
- (W) ROADWAY UNDERDRAIN
- (X) WHEELCHAIR RAMP TYPE B

STATE OF TEXAS
CHARLES M. SHINE
62999
REGISTERED PROFESSIONAL ENGINEER

The seal appearing on this document was authorized by Charles Shine P.E. 62999, on June 3, 1999

DATE	BY	REV	REVISION
6/3/99	DV	1	OFFSETS

© 1999 Texas Department of Transportation

Brown & Root
HOUSTON, TEXAS

IH 35

PROPOSED
TYPICAL SECTIONS

SHEET 14 OF 19

FED RD DIV NO	STATE PROJECT NO		SHEET NO
6	NH-99(462)		22
STATE	STATE DIST NO	COUNTY	
TEXAS	22	WEBB	
CONT	SECT	JOB	HIGHWAY NO
0018	06	131	IH 35

REV. 6-25-99

REF FILE(S): J01LOX01.BDR, BDR LV ON = 45.47.57.60-62

D021SX14.DGN-12 06-02-99 BAR_HO_ES05 \HCIVIL\CF0039\PHASE2

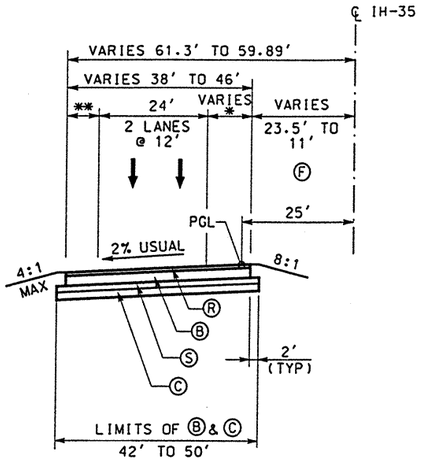

* VARIES 4' TO 12' SHOULDER
** VARIES 10' TO 6' SHOULDER

S1

SOUTHBOUND MAIN LANES I-35
NTS

STA 106+60.00 TO 110+50.00

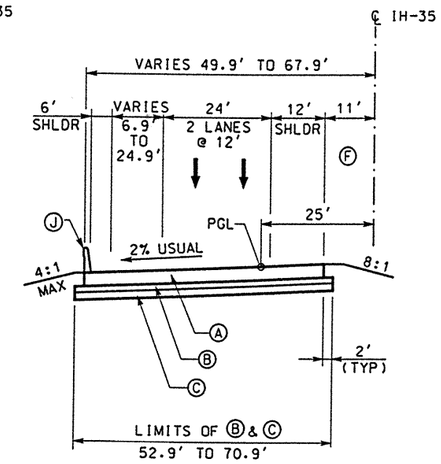

S2

SOUTHBOUND MAIN LANES I-35
NTS

STA 110+50.00 TO 114+00.00

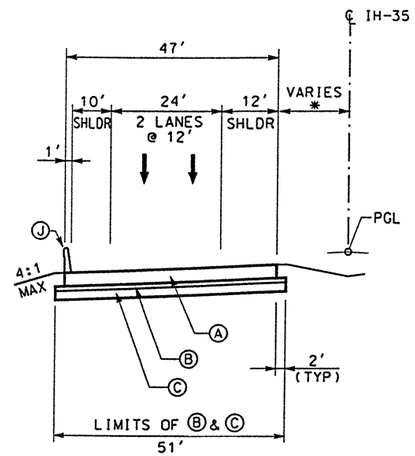

* 11'STA 119+19.20 TO 119+50.00
TRANSITION 11'TO 16'STA 119+50.00 TO 124+50.00
16'STA 124+50.00 TO 125+00.00

S4

SOUTHBOUND MAIN LANES I-35
NTS

STA 119+19.00 TO 125+00.00

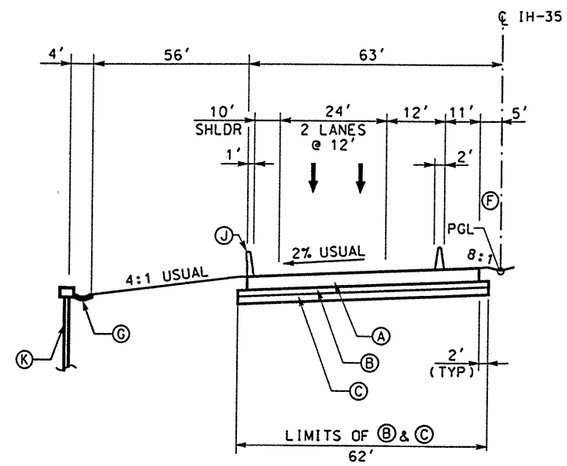

S7

SOUTHBOUND MAIN LANES I-35
NTS

STA 133+55.23 TO 134+05.00

LEGEND:

- Ⓐ CONC PAV (CONT REINF HY STL)(12")
- Ⓑ ASPH CONC PAV (TY A)(4")
- Ⓒ LIME TREATED SUBGRADE (8")
- Ⓓ SINGLE SLOPE CONCRETE BARRIER (SSCB) (TYPE 2)
- Ⓔ TYPE II MONO CURB (6")
- Ⓕ CELL FIBER MULCH SEED (PERM) (RURAL)(CLAY)
- Ⓖ CLASS B RIPRAP (4")
- Ⓗ CONC SIDEWALK (4")
- Ⓘ CONC MEDIAN (6")
- Ⓙ SINGLE SLOPE TRAFFIC RAIL(SSTR) w/ DRAIN SLOTS
- Ⓚ RETAINING WALL
- Ⓛ METAL BEAM GUARD FENCE
- Ⓜ BRICK PAVERS
- Ⓝ REMOVE ASPH CONC PAV
- Ⓞ REMOVE CONC PAV
- Ⓟ TYPE II CURB AND GUTTER (6")
- Ⓠ CONCRETE DRIVEWAYS (6")
- Ⓡ ASPH CONC PAV (TY D)(2")
- Ⓢ ASPH CONC PAV (TY A)(8")
- Ⓣ PLANE ASPH CONC PAV (0 - 1")
- Ⓤ SINGLE SLOPE TRAFFIC RAIL (SSTR)
- Ⓥ CHAINLINK FENCE (6')
- Ⓦ ROADWAY UNDERDRAIN
- Ⓧ WHEELCHAIR RAMP TYPE B

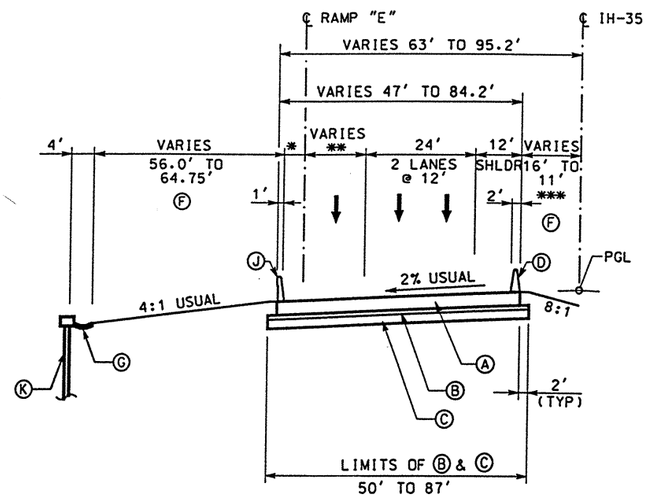

* VARIES 10' TO 6' SHOULDER
** VARIES 0' TO 41.2' RAMP/TRAVEL LANE
*** 16.0' STA 134+05.23 TO 139+00.00
TRANSITION 16' TO 11' STA 139+00.00 TO 144+00
11' STA 144+00 TO 146+45

S8

SOUTHBOUND MAIN LANES I-35
NTS

STA 134+05.00 TO 146+45.00

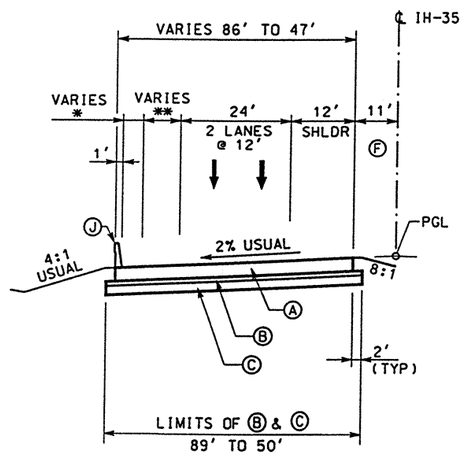

* VARIES 8' TO 10' SHOULDER
STA 168+09.84 TO 168+98.58
** VARIES 40.8' TO 0' RAMP TRAVEL LANE

S10

SOUTHBOUND MAIN LANES I-35
NTS

STA 161+88.00 TO 168+98.58

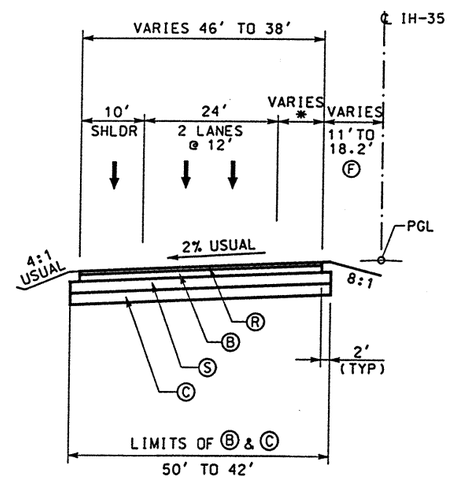

* VARIES 12' TO 4' SHOULDER

S12

SOUTHBOUND MAIN LANES I-35
NTS

STA 172+80.00 TO 175+58.00

REV. 6-25-99

STATE OF TEXAS
CHARLES M. SHINE
62999
REGISTERED PROFESSIONAL ENGINEER

The seal appearing on this document was authorized by Charles Shine P.E. 62999, on June 3, 1999.

DATE	BY	REV	REVISION
6/3/99	DV	1	OFFSETS

© 1999 Texas Department of Transportation

Brown & Root
HOUSTON, TEXAS

IH 35

PROPOSED
TYPICAL SECTIONS

SHEET 15 OF 19

FED RD DIV NO	STATE PROJECT NO		SHEET NO
6	NH-99(462)		23
STATE	STATE DIST NO	COUNTY	
TEXAS	22	WEBB	
CONT	SECT	JOB	HIGHWAY NO
0018	06	131	IH 35

REF FILE(S): J01LOX01.BDR, BDR LV ON = 45,47,57,60-62

06-03-99 BAR_HO_ES05 \HCIVIL\CF0039\PHASE2 D02TSX15.DGN-15

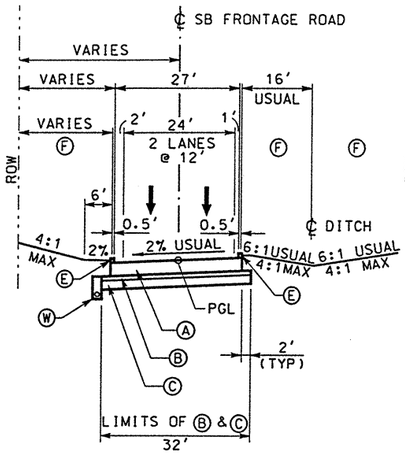

SB1

SOUTHBOUND FRONTAGE ROAD

NTS

STA 122+80.00 TO 123+08.00
STA 137+25.00 TO 150+60.45

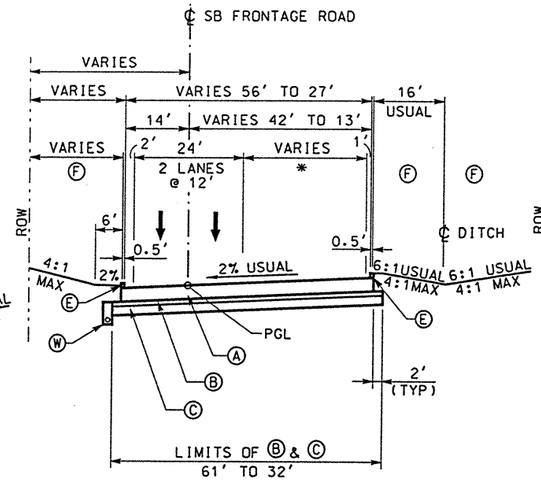

* VARIES 29' TO 0' RAMP/TRAVEL LANE

SB2

SOUTHBOUND FRONTAGE ROAD

NTS

STA 123+08.00 TO 125+94.70

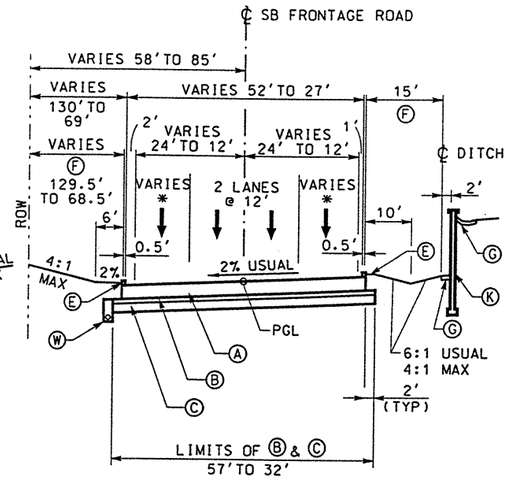

* VARIES 12' TO 0' TRAVEL LANE

SB6

SOUTHBOUND FRONTAGE ROAD

NTS

STA 135+75.00 TO 137+25.00

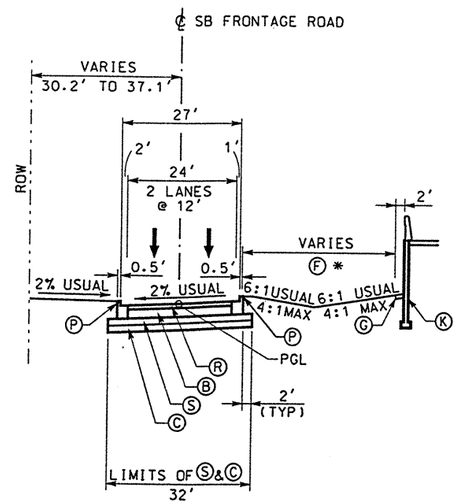

SB8

SOUTHBOUND FRONTAGE ROAD

NTS

STA 154+00.00 TO 166+00.00

* CLASS B RIPRAP (4") FROM STA 156+90 TO STA 162+50 (2:1 MAX RIPRAP SLOPE)

LEGEND:

- Ⓐ CONC PAV (CONT REINF HY STL)(12")
- Ⓑ ASPH CONC PAV (TY A)(4")
- Ⓒ LIME TREATED SUBGRADE (8")
- Ⓓ SINGLE SLOPE CONCRETE BARRIER (SSCB) (TYPE 2)
- Ⓔ TYPE II MONO CURB (6")
- Ⓕ CELL FIBER MULCH SEED (PERM) (RURAL)(CLAY)
- Ⓖ CLASS B RIPRAP (4")
- Ⓗ CONC SIDEWALK (4")
- Ⓘ CONC MEDIAN (6")
- Ⓙ SINGLE SLOPE TRAFFIC RAIL(SSTR) w/ DRAIN SLOTS
- Ⓚ RETAINING WALL
- Ⓛ METAL BEAM GUARD FENCE
- Ⓜ BRICK PAVERS
- Ⓝ REMOVE ASPH CONC PAV
- Ⓞ REMOVE CONC PAV
- Ⓟ TYPE II CURB AND GUTTER (6")
- Ⓠ CONCRETE DRIVEWAYS (6")
- Ⓡ ASPH CONC PAV (TY D)(2")
- Ⓢ ASPH CONC PAV (TY A)(8")
- Ⓣ PLANE ASPH CONC PAV (0 - 1")
- Ⓤ SINGLE SLOPE TRAFFIC RAIL (SSTR)
- Ⓥ CHAINLINK FENCE (6')
- Ⓦ ROADWAY UNDERDRAIN
- Ⓧ WHEELCHAIR RAMP TYPE B

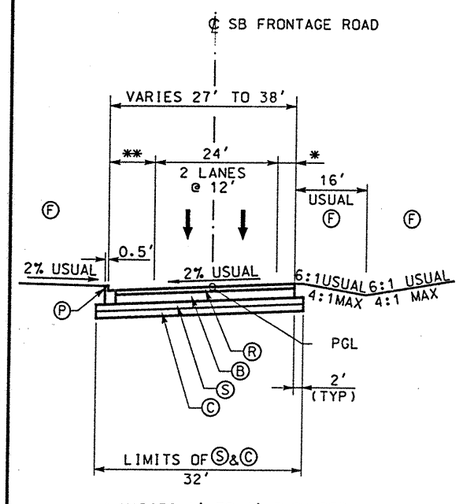

* VARIES 1' TO 4' SHOULDER
** VARIES 2' TO 10' SHOULDER

SB9

SOUTHBOUND FRONTAGE ROAD

NTS

STA 166+00.00 TO 168+00.00

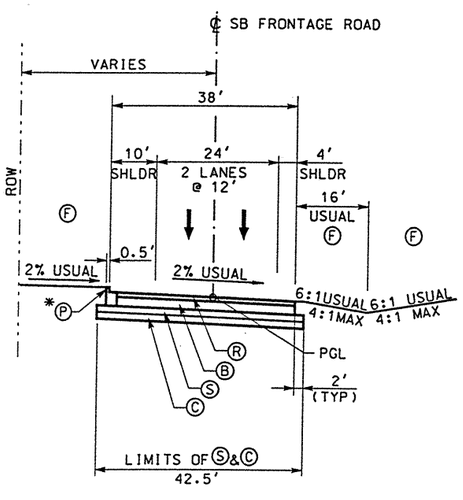

* STA 168+00 TO 209+40.03
BEGIN STA 210+61.19

SB10

SOUTHBOUND FRONTAGE ROAD

NTS

STA 168+00.00 TO 234+97.52
STA 242+50.00 TO 243+50.00

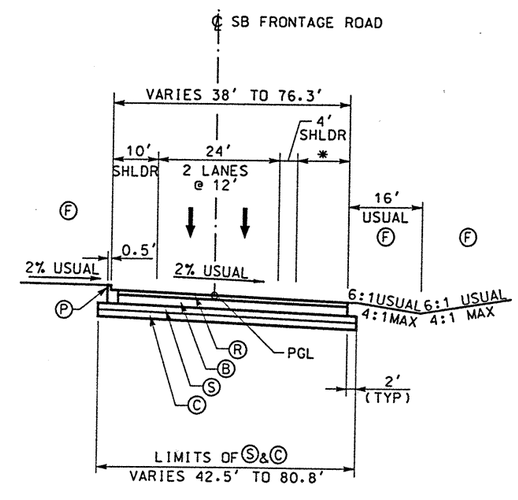

* 0' TO 38.3' RAMP/TRAVEL LANE

SB11

SOUTHBOUND FRONTAGE ROAD

NTS

STA 234+97.52 TO 242+50.00

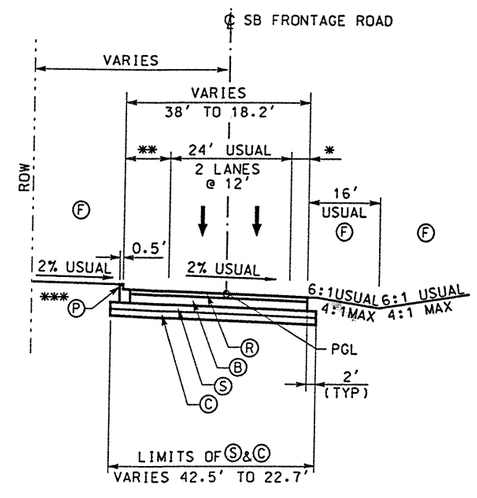

* VARIES 4' TO 0' SHOULDER
** VARIES 10' TO 0' SHOULDER
*** STA 243+50.00 TO 244+50.00

SB12

SOUTHBOUND FRONTAGE ROAD

NTS

STA 243+50.00 TO 247+00.00

REV. 6-25-99

STATE OF TEXAS
CHARLES M. SHINE
62999
REGISTERED PROFESSIONAL ENGINEER

The seal appearing on this document was authorized by Charles Shine P.E. 62999 on June 3, 19

DATE	BY	REV	REVISION
6/3/99	DV	1	OFFSETS

© 1999 Texas Department of Transportation

Brown & Root
HOUSTON, TEXAS

IH 35

PROPOSED
TYPICAL SECTIONS

SHEET 16 OF 19

FED RD DIV NO	STATE PROJECT NO		SHEET NO
6	NH-99(462)		24
STATE	STATE DIST NO		COUNTY
TEXAS	22		WEBB
CONT	SECT	JOB	HIGHWAY NO
0018	06	131	IH 35

REF FILE(S): J01LOX01.BDR, BDR LV ON = 45,47,57,60-62

06-03-99 BAR_HO_ES05 \HCIVIL\CF0039\PHASE2

D021SX16.DGN-12

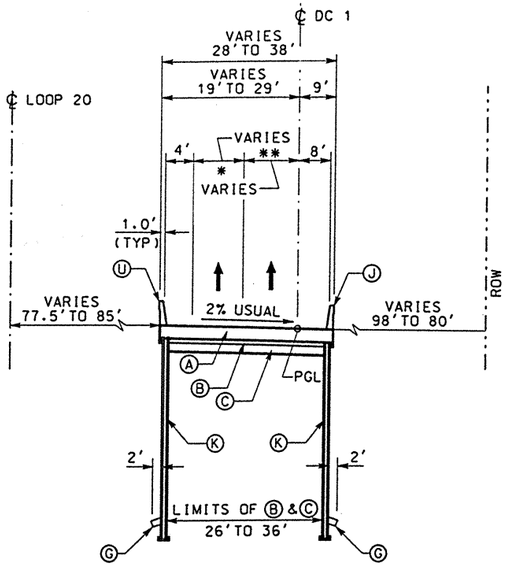

* VARIES 0' TO 12' TRAVEL LANE
** VARIES 14' TO 12' TRAVEL LANE

DIRECT CONNECTOR
NTS
DC1-1
STA 317+26.90 TO 322+08.70

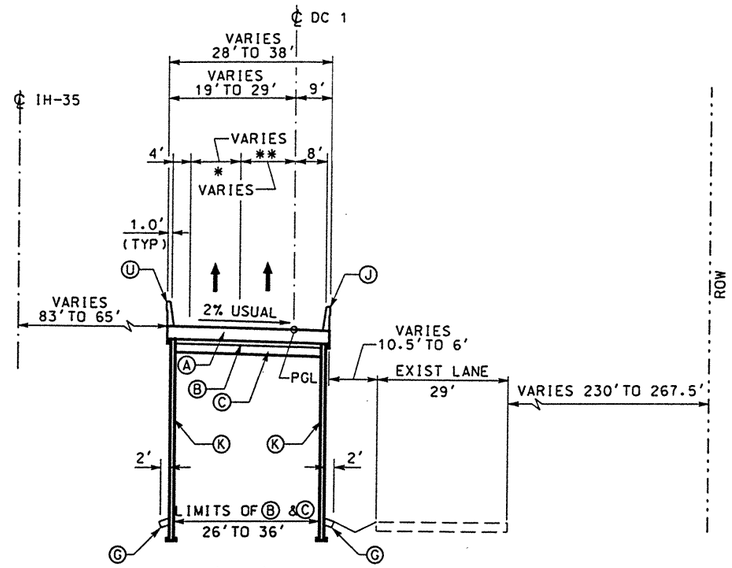

* VARIES 12' TO 0' TRAVEL LANE
** VARIES 12' TO 14' TRAVEL LANE
*** Ⓤ STA 366+18.00 TO 368+75.00
Ⓙ BEGINS 368+75.00

DIRECT CONNECTOR
NTS
DC1-3
STA 369+00.00 TO 374+86.32

LEGEND:

- Ⓐ CONC PAV (CONT REINF HY STL)(12")
- Ⓑ ASPH CONC PAV (TY A)(4")
- Ⓒ LIME TREATED SUBGRADE (8")
- Ⓓ SINGLE SLOPE CONCRETE BARRIER (SSCB) (TYPE 2)
- Ⓔ TYPE II MONO CURB (6")
- Ⓕ CELL FIBER MULCH SEED (PERM) (RURAL)(CLAY)
- Ⓖ CLASS B RIPRAP (4")
- Ⓗ CONC SIDEWALK (4")
- Ⓘ CONC MEDIAN (6")
- Ⓙ SINGLE SLOPE TRAFFIC RAIL(SSTR) w/ DRAIN SLOTS
- Ⓚ RETAINING WALL
- Ⓛ METAL BEAM GUARD FENCE
- Ⓜ BRICK PAVERS
- Ⓝ REMOVE ASPH CONC PAV
- Ⓞ REMOVE CONC PAV
- Ⓟ TYPE II CURB AND GUTTER (6")
- Ⓠ CONCRETE DRIVEWAYS (6")
- Ⓡ ASPH CONC PAV (TY D)(2")
- Ⓢ ASPH CONC PAV (TY A)(8")
- Ⓣ PLANE ASPH CONC PAV (0 - 1")
- Ⓤ SINGLE SLOPE TRAFFIC RAIL (SSTR)
- Ⓥ CHAINLINK FENCE (6')
- Ⓦ ROADWAY UNDERDRAIN
- Ⓧ WHEELCHAIR RAMP TYPE B

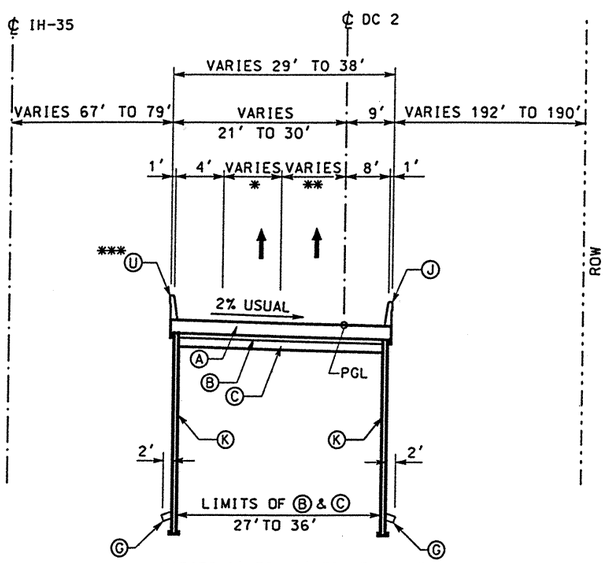

* VARIES 0' TO 12' TRAVEL LANE
** VARIES 14' TO 12' TRAVEL LANE
*** Ⓤ BEGINS STA 327+00.00

DIRECT CONNECTOR
NTS
DC2-1
STA 324+46.16 TO 329+37.13

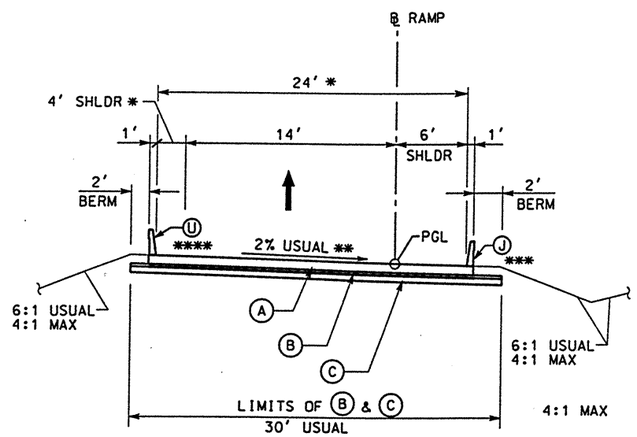

PROPOSED TYPICAL SECTION ENTRANCE /EXIT RAMP (CONCRETE)
NTS

RAMPS "A", "B", "C", "D", "E" AND "F"

* 2' INSIDE SHLDR ON RAMP "A" (22' FROM INSIDE TO OUTSIDE FACE OF RAIL).

** THE CROSS SLOPE ON RAMP "A" IS REVERSED THEREFORE Ⓙ IS LOCATED ON INSIDE SHLDR (18' LT) AND Ⓤ IS LOCATED ON INSIDE SHLDR (6' RT).

*** RAMP "C" HAS NO RAIL ON THE OUTSIDE SHLDR, THEREFORE THE TOTAL PAVEMENT WIDTH IS 25'.

**** RAMP "D" HAS NO RAIL ON THE INSIDE SHLDR, THEREFORE THE TOTAL PAVEMENT WIDTH IS 25'.

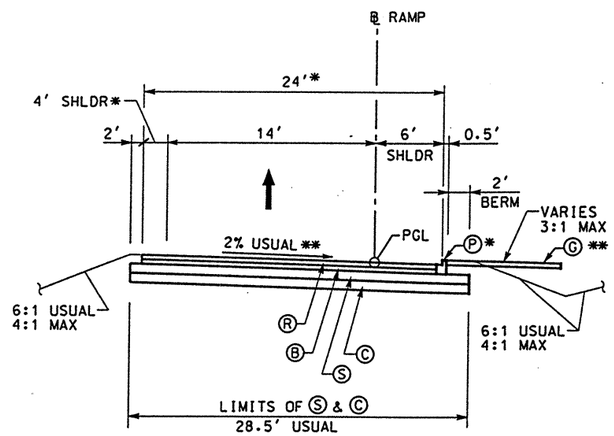

PROPOSED TYPICAL SECTION ENTRANCE /EXIT RAMP (ASPHALT)
NTS

RAMPS "K", "M" AND "P"

* RAMP "K" HAS A 10' INSIDE SHLDR AND NO CURB AND GUTTER ON THE OUTSIDE SHLDR (30' FROM OUTSIDE TO INSIDE EDGE OF Ⓐ).

** RAMP "P" HAS Ⓖ (WITH NO DITCH) CONNECTING ITS OUTSIDE CURB AND GUTTER TO THE INSIDE CURB AND GUTTER ON THE PROPOSED SOUTH BOUND FRONTAGE ROAD.

SEE REVISION
REV. 6-25-99

STATE OF TEXAS
CHARLES M. SHINE
R. 62999
REGISTERED PROFESSIONAL ENGINEER

The seal appearing on this document was authorized by Charles Shine P.E. 62999 on June 3, 1999

DATE	BY	REV	REVISION
6/3/99	DV	1	OFFSETS

© 1999 Texas Department of Transportation

Brown & Root
HOUSTON, TEXAS

LOOP 20

PROPOSED TYPICAL SECTIONS

SHEET 17 OF 19

FED RD DIV NO	STATE PROJECT NO	SHEET NO
6	C86-14-23	25

STATE	STATE DIST NO	COUNTY
TEXAS	22	WEBB

CONT	SECT	JOB	HIGHWAY NO
0086	14	023	LOOP 20

REF FILE(S): J01LOX01.BDR, BDR LV ON = 45,47,57,60-62

05-24-99 BAR_HO_ES05 \HCIVIL\CF0039\PHASE2
D02TSX17.DGN-11

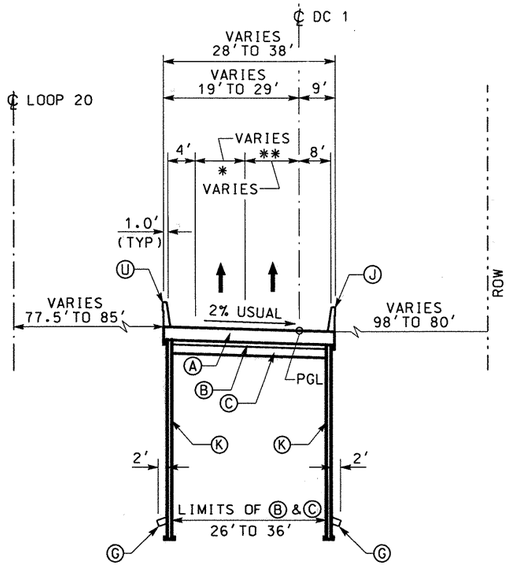

* VARIES 0' TO 12' TRAVEL LANE
** VARIES 14' TO 12' TRAVEL LANE

DIRECT CONNECTOR

NTS

STA 317+26.90 TO 322+08.70

DC1-1

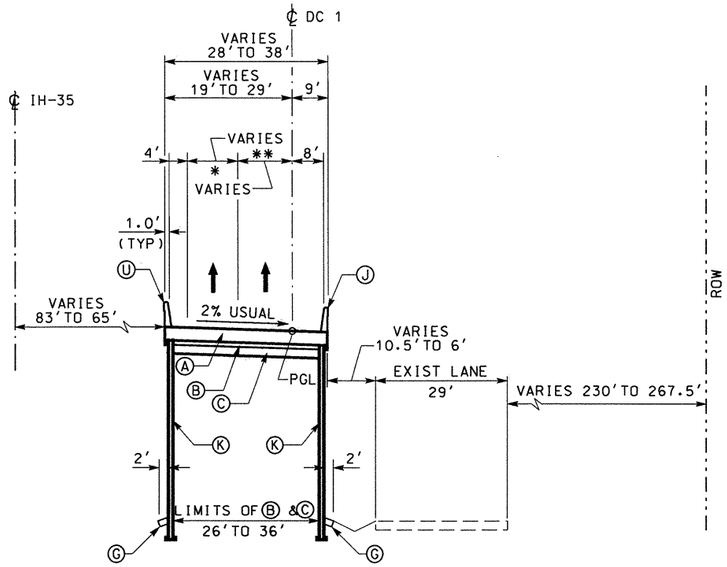

* VARIES 12' TO 0' TRAVEL LANE
** VARIES 12' TO 14' TRAVEL LANE
*** U STA 366+18.00 TO 368+75.00
J BEGINS 368+75.00

DIRECT CONNECTOR

NTS

STA 369+00.00 TO 374+86.32

DC1-3

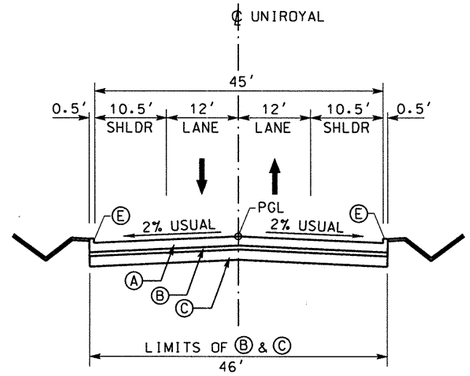

PROPOSED TYPICAL SECTION UNIROYAL

NTS

UNIROYAL

STA 11+01.52 TO STA 13+79.87

LEGEND:

- (A) CONC PAV (CONT REINF HY STL)(12")
- (B) ASPH CONC PAV (TY A)(4")
- (C) LIME TREATED SUBGRADE (8")
- (D) SINGLE SLOPE CONCRETE BARRIER (SSCB) (TYPE 2)
- (E) TYPE II MONO CURB (6")
- (F) CELL FIBER MULCH SEED (PERM) (RURAL)(CLAY)
- (G) CLASS B RIPRAP (4")
- (H) CONC SIDEWALK (4")
- (I) CONC MEDIAN (6")
- (J) SINGLE SLOPE TRAFFIC RAIL(SSTR) w/ DRAIN SLOTS
- (K) RETAINING WALL
- (L) METAL BEAM GUARD FENCE
- (M) BRICK PAVERS
- (N) REMOVE ASPH CONC PAV
- (O) REMOVE CONC PAV
- (P) TYPE II CURB AND GUTTER (6")
- (Q) CONCRETE DRIVEWAYS (6")
- (R) ASPH CONC PAV (TY D)(2")
- (S) ASPH CONC PAV (TY A)(8")
- (T) PLANE ASPH CONC PAV (0 - 1")
- (U) SINGLE SLOPE TRAFFIC RAIL (SSTR)
- (V) CHAINLINK FENCE (6')
- (W) ROADWAY UNDERDRAIN
- (X) WHEELCHAIR RAMP TYPE B

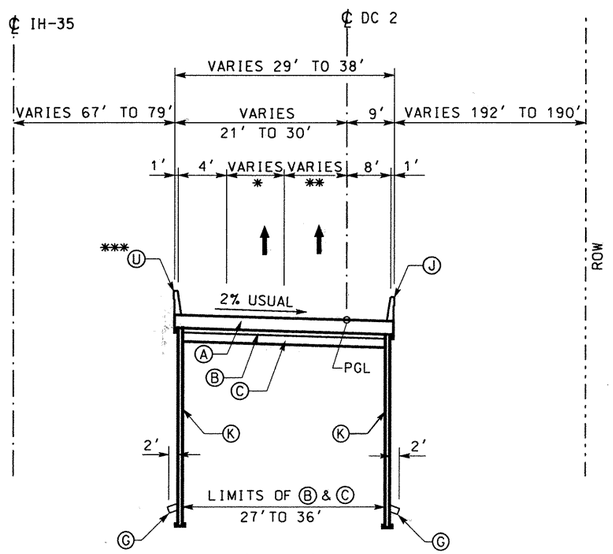

* VARIES 0' TO 12' TRAVEL LANE
** VARIES 14' TO 12' TRAVEL LANE
*** U BEGINS STA 327+00.00

DIRECT CONNECTOR

NTS

STA 324+46.16 TO 329+37.13

DC2-1

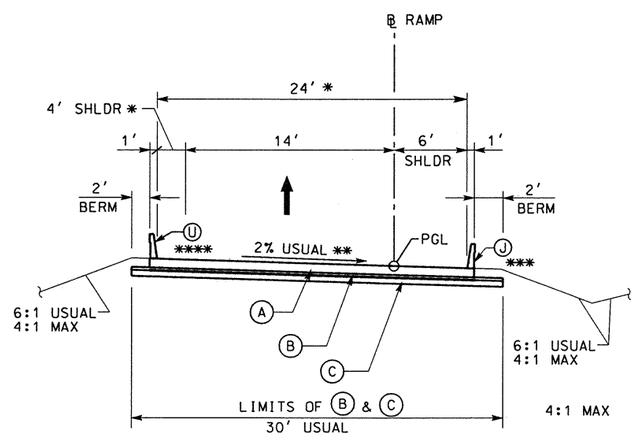

PROPOSED TYPICAL SECTION ENTRANCE /EXIT RAMP (CONCRETE)

NTS

RAMPS "A", "B", "C", "D", "E" AND "F"

* 2' INSIDE SHLDR ON RAMP "A" (22' FROM INSIDE TO OUTSIDE FACE OF RAIL).

** THE CROSS SLOPE ON RAMP "A" IS REVERSED THEREFORE (J) IS LOCATED ON INSIDE SHLDR (18' LT) AND (U) IS LOCATED ON INSIDE SHLDR (6' RT).

*** RAMP "C" HAS NO RAIL ON THE OUTSIDE SHLDR, THEREFORE THE TOTAL PAVEMENT WIDTH IS 25'.

**** RAMP "D" HAS NO RAIL ON THE INSIDE SHLDR, THEREFORE THE TOTAL PAVEMENT WIDTH IS 25'.

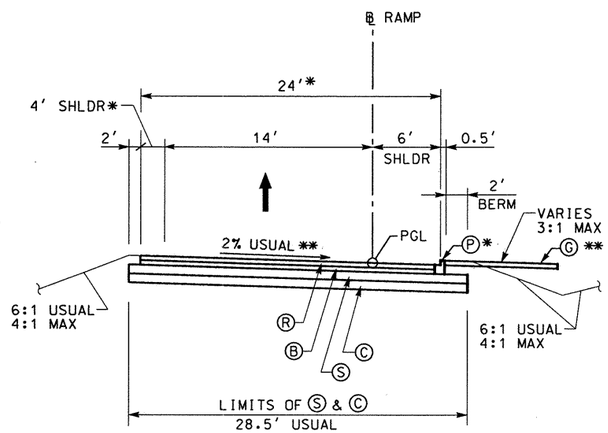

PROPOSED TYPICAL SECTION ENTRANCE /EXIT RAMP (ASPHALT)

NTS

RAMPS "K", "M" AND "P"

* RAMP "K" HAS A 10' INSIDE SHLDR AND NO CURB AND GUTTER ON THE OUTSIDE SHLDR (30' FROM OUTSIDE TO INSIDE EDGE OF (A)).

** RAMP "P" HAS (G) (WITH NO DITCH) CONNECTING ITS OUTSIDE CURB AND GUTTER TO THE INSIDE CURB AND GUTTER ON THE PROPOSED SOUTH BOUND FRONTAGE ROAD.

SEE REVISION

STATE OF TEXAS
CHARLES M. SHINE
62999
REGISTERED PROFESSIONAL ENGINEER

The seal appearing on this document was authorized by Charles Shine P.E. 62999, on September 30, 1999.

DATE	BY	REV	REVISION
6/3/99	DV	1	OFFSETS

© 1999 Texas Department of Transportation

Brown & Root
HOUSTON, TEXAS

LOOP 20

PROPOSED TYPICAL SECTIONS

SHEET 17 OF 19

FED RD DIV NO	STATE PROJECT NO		SHEET NO
6	C86-14-23		25
STATE	STATE DIST NO	COUNTY	
TEXAS	22	WEBB	
CONT	SECT	JOB	HIGHWAY NO
0086	14	023	LOOP 20

REF FILE(S): J01LOX01.BDR, BDR LV ON = 45,47,57,60-62

D02TSX17.DGN-11 05-24-99 BAR_HO_ES05 \HCIVIL\CF0039\PHASE2

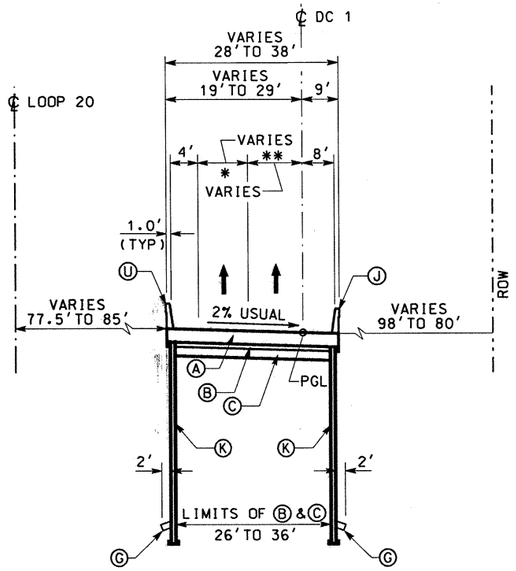

* VARIES 0' TO 12' TRAVEL LANE
** VARIES 14' TO 12' TRAVEL LANE

DIRECT CONNECTOR
NTS
STA 317+26.90 TO 322+08.70

DC1-1

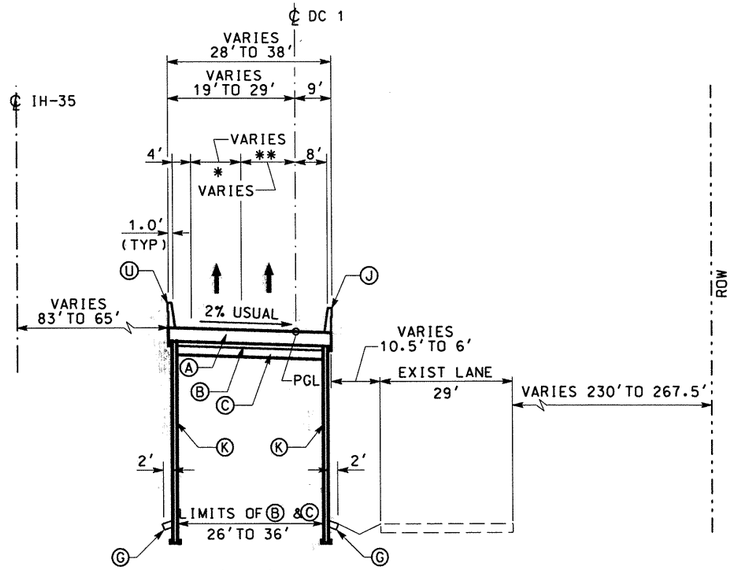

* VARIES 12' TO 0' TRAVEL LANE
** VARIES 12' TO 14' TRAVEL LANE
*** U STA 366+18.00 TO 368+75.00
J BEGINS 368+75.00

DIRECT CONNECTOR
NTS
STA 369+00.00 TO 374+86.32

DC1-3

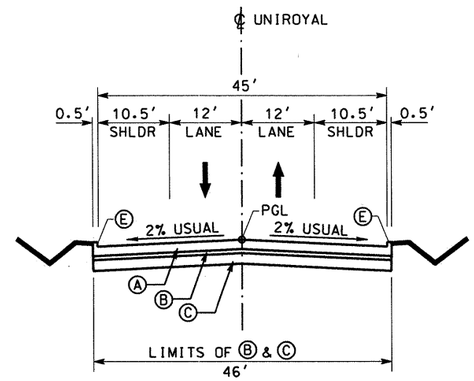

PROPOSED TYPICAL SECTION UNIROYAL
NTS

UNIROYAL
STA 11+01.52 TO STA 13+79.87

LEGEND:

- A CONC PAV (CONT REINF HY STL)(12")
- B ASPH CONC PAV (TY A)(4")
- C LIME TREATED SUBGRADE (8")
- D SINGLE SLOPE CONCRETE BARRIER (SSCB) (TYPE 2)
- E TYPE II MONO CURB (6")
- F CELL FIBER MULCH SEED (PERM) (RURAL)(CLAY)
- G CLASS B RIPRAP (4")
- H CONC SIDEWALK (4")
- I CONC MEDIAN (6")
- J SINGLE SLOPE TRAFFIC RAIL(SSTR) w/ DRAIN SLOTS
- K RETAINING WALL
- L METAL BEAM GUARD FENCE
- M BRICK PAVERS
- N REMOVE ASPH CONC PAV
- O REMOVE CONC PAV *
- P TYPE II CURB AND GUTTER (6")
- Q CONCRETE DRIVEWAYS (6")
- R ASPH CONC PAV (TY D)(2")
- S ASPH CONC PAV (TY A)(8")
- T PLANE ASPH CONC PAV (0 - 1")
- U SINGLE SLOPE TRAFFIC RAIL (SSTR)
- V CHAINLINK FENCE (6')
- W ROADWAY UNDERDRAIN
- X WHEELCHAIR RAMP TYPE B

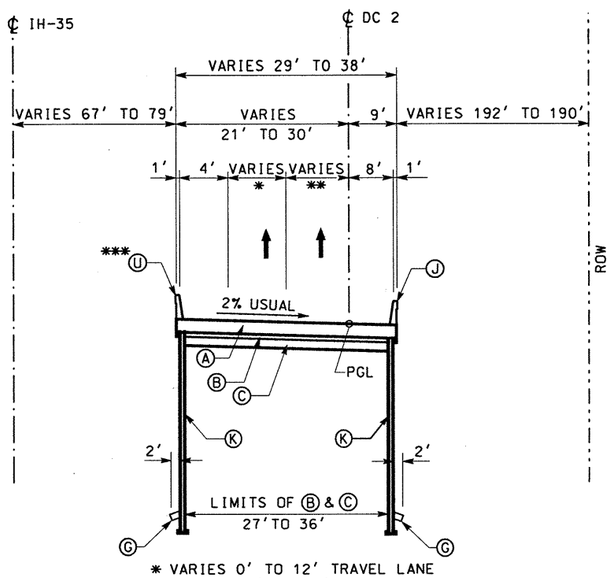

* VARIES 0' TO 12' TRAVEL LANE
** VARIES 14' TO 12' TRAVEL LANE
*** U BEGINS STA 327+00.00

DIRECT CONNECTOR
NTS
STA 324+46.16 TO 329+37.13

DC2-1

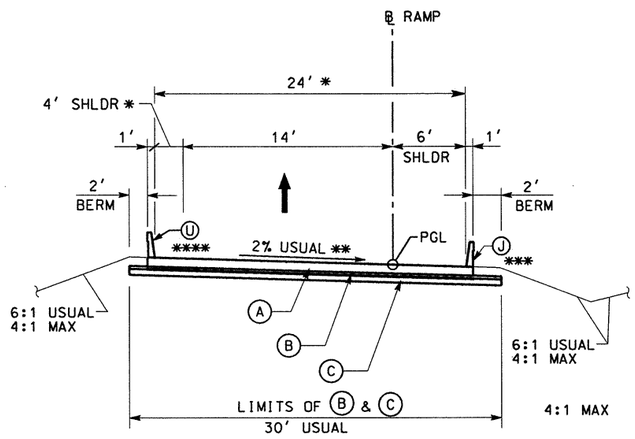

PROPOSED TYPICAL SECTION ENTRANCE /EXIT RAMP (CONCRETE)
NTS

RAMPS "A", "B", "C", "D", "E" AND "F"

* 2' INSIDE SHLDR ON RAMP "A" (22' FROM INSIDE TO OUTSIDE FACE OF RAIL).

** THE CROSS SLOPE ON RAMP "A" IS REVERSED THEREFORE J IS LOCATED ON INSIDE SHLDR (18' LT) AND U IS LOCATED ON INSIDE SHLDR (6' RT).

*** RAMP "C" HAS NO RAIL ON THE OUTSIDE SHLDR, THEREFORE THE TOTAL PAVEMENT WIDTH IS 25'.

**** RAMP "D" HAS NO RAIL ON THE INSIDE SHLDR, THEREFORE THE TOTAL PAVEMENT WIDTH IS 25'.

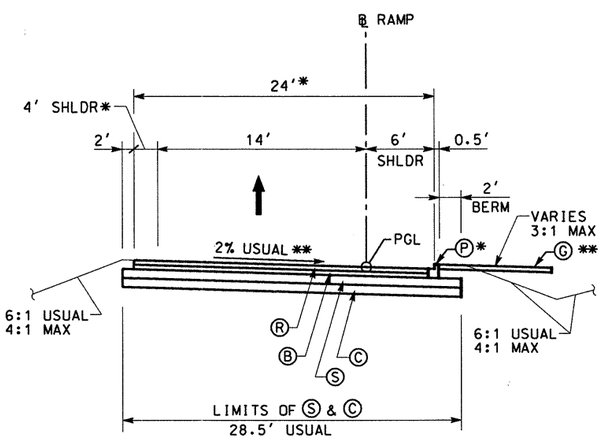

PROPOSED TYPICAL SECTION ENTRANCE /EXIT RAMP (ASPHALT)
NTS

RAMPS "K", "M" AND "P"

* RAMP "K" HAS A 10' INSIDE SHLDR AND NO CURB AND GUTTER ON THE OUTSIDE SHLDR (30' FROM OUTSIDE TO INSIDE EDGE OF A).

** RAMP "P" HAS G (WITH NO DITCH) CONNECTING ITS OUTSIDE CURB AND GUTTER TO THE INSIDE CURB AND GUTTER ON THE PROPOSED SOUTH BOUND FRONTAGE ROAD.

STATE OF TEXAS
CHARLES M. SHINE
62999
REGISTERED PROFESSIONAL ENGINEER

The seal appearing on this document was authorized by Charles Shine P.E. 62999, on September 30, 1999.

DATE	BY	REV	REVISION
6/3/99	DV	1	OFFSETS
9/29/99	RS	2	RETAINING WALL "B" & "H"

© 1999 Texas Department of Transportation

Brown & Root
HOUSTON, TEXAS

LOOP 20

PROPOSED TYPICAL SECTIONS

SHEET 17 OF 19

FED RD DIV NO	STATE PROJECT NO		SHEET NO
6	C86-14-23		25
STATE	STATE DIST NO	COUNTY	
TEXAS	22	WEBB	
CONT	SECT	JOB	HIGHWAY NO
0086	14	023	LOOP 20

REF FILE(S): J01LOX01.BDR, BDR LV ON = 45,47,57,60-62

D02TSX17.DGN-11 05-24-99 BAR_HQ_ES05 \HCIVIL\CF0039\PHASE2

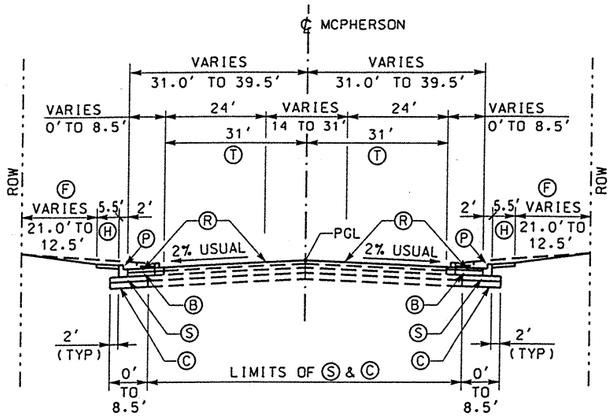

PROPOSED TYPICAL SECTION

NTS

MCPHERSON

STA 1+79.29 TO STA 6+05.00
STA 13+95.00 TO STA 18+20.36

MP1

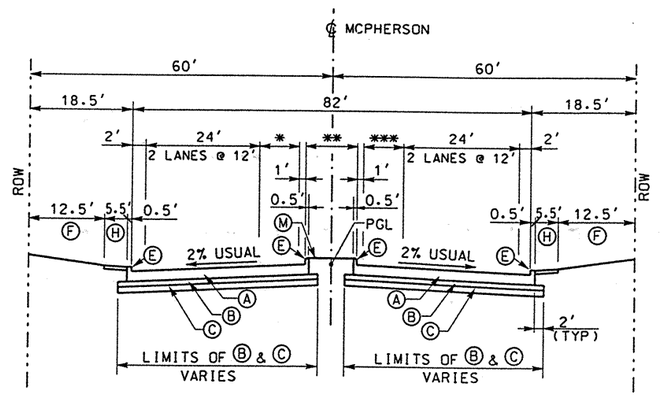

* 14' LANE STA 11+78.25 TO STA 12+85.58
** CONC MEDIAN VARIES 15' TO 20' STA 6+11.40 TO STA 6+88.72
CONC MRDIAN VARIES 15' TO 20' STA 12+85.58 TO STA 13+88.59
*** 14' LANE STA 6+05.00 TO STA 6+11.40

PROPOSED TYPICAL SECTION

NTS

MCPHERSON

STA 6+05.00 TO STA 7+26.28
STA 12+65.94 TO STA 13+95.00

MP2

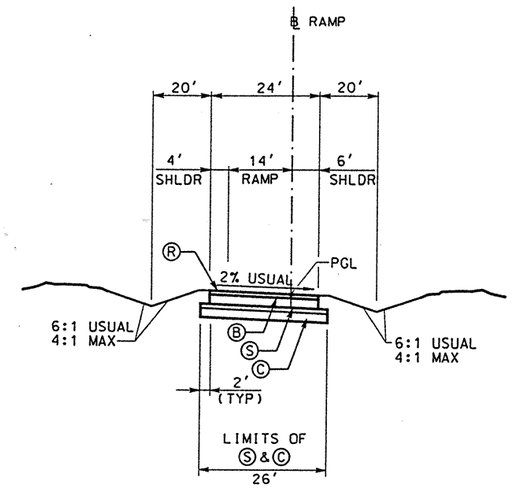

PROPOSED TYPICAL SECTION

NTS

TEMPORARY CONNECTION

LP 20 EFR STA 502+00.00 TO STA 515+00.00

LEGEND:

- Ⓐ CONC PAV (CONT REINF HY STL)(12")
- Ⓑ ASPH CONC PAV (TY A)(4")
- Ⓒ LIME TREATED SUBGRADE (8")
- Ⓓ SINGLE SLOPE CONCRETE BARRIER (SSCB) (TYPE 2) w/ DRAIN SLOTS
- Ⓔ TYPE II MONO CURB (6")
- Ⓕ CELL FIBER MULCH SEED (PERM)(RURAL)(CLAY)
- Ⓖ CLASS B RIPRAP (4")
- Ⓗ CONC SIDEWALK (4")
- Ⓘ CONC MEDIAN (6")
- Ⓙ SINGLE SLOPE TRAFFIC RAIL(SSTR) w/ DRAIN SLOTS
- Ⓚ RETAINING WALL
- Ⓛ METAL BEAM GUARD FENCE
- Ⓜ BRICK PAVERS
- Ⓝ REMOVE ASPH CONC PAV
- Ⓞ REMOVE CONC PAV
- Ⓟ TYPE II CURB AND GUTTER (6")
- Ⓠ CONCRETE DRIVEWAYS (6")
- Ⓡ ASPH CONC PAV (TY D)(2")
- Ⓢ ASPH CONC PAV (TY A)(8")
- Ⓣ PLANE ASPH CONC PAV (0 - 1")

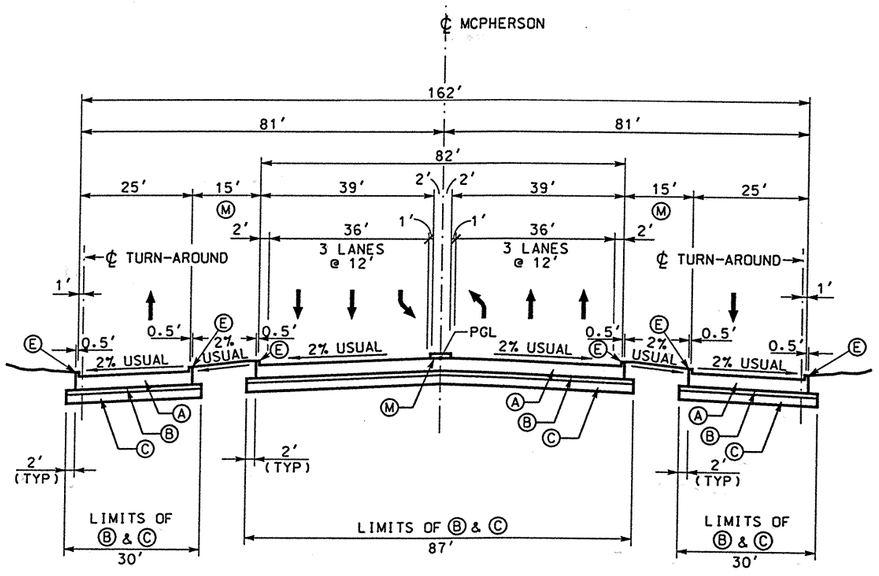

PROPOSED TYPICAL SECTION

NTS

MCPHERSON INTERSECTION

STA 08+77.39 TO STA 11+15.03

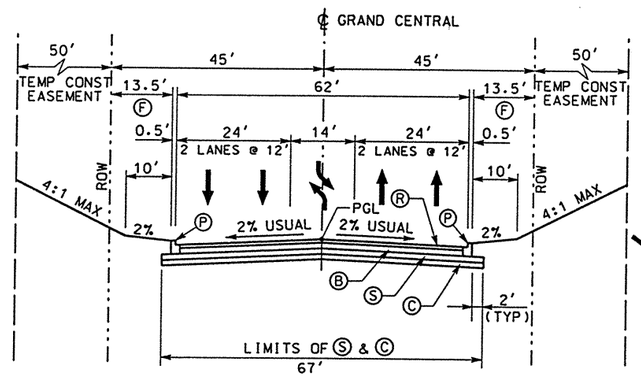

PROPOSED TYPICAL SECTION

NTS

GRAND CENTRAL

STA 11+15.00 TO STA 14+98.44

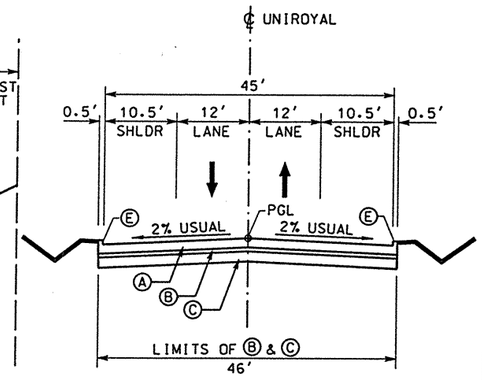

PROPOSED TYPICAL SECTION UNIROYAL

NTS

UNIROYAL

STA 11+01.52 TO STA 13+79.87

SEE REVISION
REV. 6-25-99

STATE OF TEXAS
CHARLES M. SHINE
62999
REGISTERED PROFESSIONAL ENGINEER

The seal appearing on this document was authorized by Charles Shine P.E. 62999, on June 3, 1999.

Charles Shine, P.E.

DATE	BY	REV	REVISION
6/3/99	DV	1	OFFSETS

© 1999 Texas Department of Transportation

Brown & Root
HOUSTON, TEXAS

LOOP 20

PROPOSED
TYPICAL SECTIONS
MCPHERSON
GRAND CENTRAL
UNIROYAL

SHEET 18 OF 19

FED RD DIV NO	STATE PROJECT NO		SHEET NO
6	C86-14-23		26
STATE	STATE DIST NO	COUNTY	
TEXAS	22	WEBB	
CONT	SECT	JOB	HIGHWAY NO
0086	14	023	LOOP 20

REF FILE(S): J01LOX01.BDR, BDR LV ON = 45,47,57,60-62

D02TSX18.DGN-12 06-07-99 BAR_HO_ES05 \HGIVIL\GF0039\PHASE2

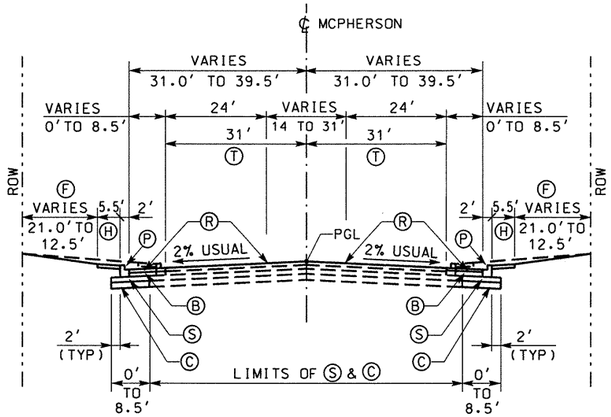

PROPOSED TYPICAL SECTION

NTS

MCPHERSON

STA 1+79.29 TO STA 6+05.00
STA 13+95.00 TO STA 18+20.36

MP1

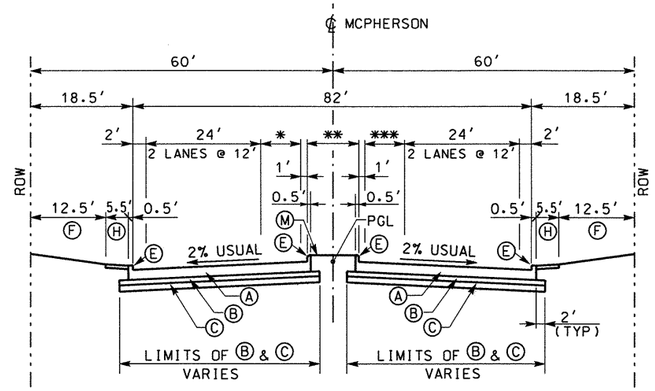

* 14' LANE STA 11+78.25 TO STA 12+85.58
** CONC MEDIAN VARIES 15' TO 20' STA 6+11.40 TO STA 6+88.72
CONC MRDIAN VARIES 15' TO 20' STA 12+85.58 TO STA 13+88.59
*** 14' LANE STA 6+05.00 TO STA 6+11.40

PROPOSED TYPICAL SECTION

NTS

MCPHERSON

STA 6+05.00 TO STA 7+26.28
STA 12+65.94 TO STA 13+95.00

MP2

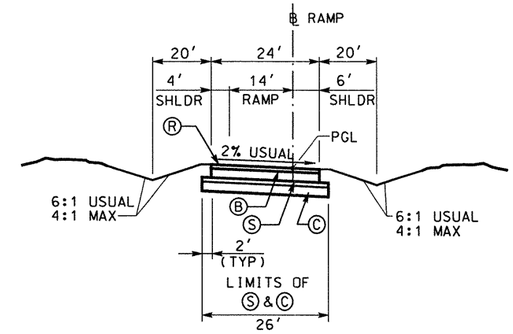

PROPOSED TYPICAL SECTION

NTS

TEMPORARY CONNECTION

LP 20 EFR STA 502+00.00 TO STA 515+00.00

LEGEND:

- Ⓐ CONC PAV (CONT REINF HY STL)(12")
- Ⓑ ASPH CONC PAV (TY A)(4")
- Ⓒ LIME TREATED SUBGRADE (8")
- Ⓓ SINGLE SLOPE CONCRETE BARRIER (SSCB) (TYPE 2) w/ DRAIN SLOTS
- Ⓔ TYPE II MONO CURB (6")
- Ⓕ CELL FIBER MULCH SEED (PERM)(RURAL)(CLAY)
- Ⓖ CLASS B RIPRAP (4")
- Ⓗ CONC SIDEWALK (4")
- Ⓘ CONC MEDIAN (6")
- Ⓙ SINGLE SLOPE TRAFFIC RAIL(SSTR) w/ DRAIN SLOTS
- Ⓚ RETAINING WALL
- Ⓛ METAL BEAM GUARD FENCE
- Ⓜ BRICK PAVERS
- Ⓝ REMOVE ASPH CONC PAV
- Ⓞ REMOVE CONC PAV
- Ⓟ TYPE II CURB AND GUTTER (6")
- Ⓠ CONCRETE DRIVEWAYS (6")
- Ⓡ ASPH CONC PAV (TY D)(2")
- Ⓢ ASPH CONC PAV (TY A)(8")
- Ⓣ PLANE ASPH CONC PAV (0 - 1")

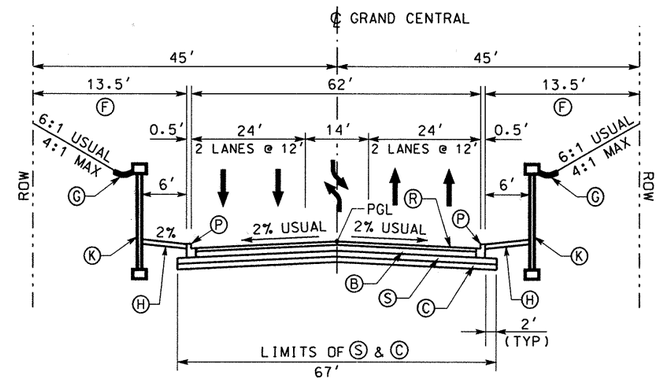

PROPOSED TYPICAL SECTION

NTS

GRAND CENTRAL

STA 11+15.00 TO STA 13+52.57

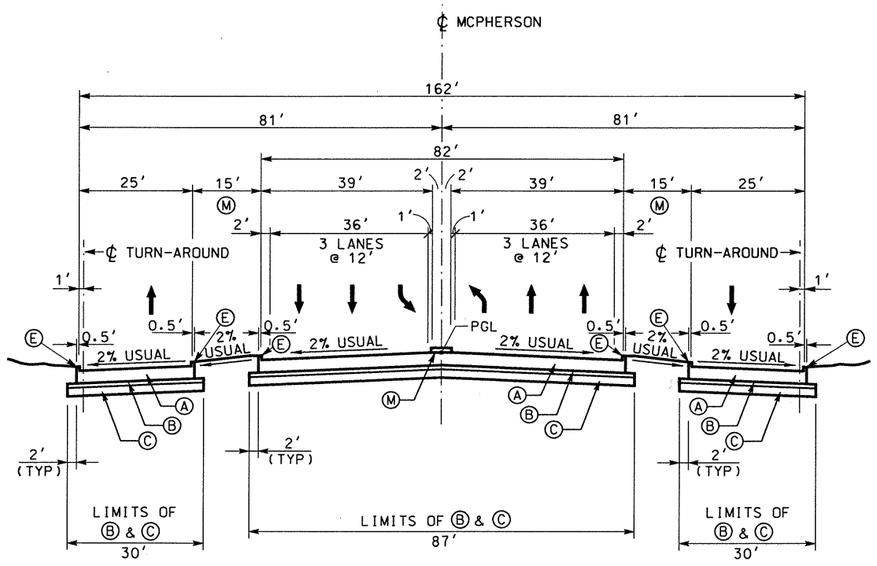

PROPOSED TYPICAL SECTION

NTS

MCPHERSON INTERSECTION

STA 08+77.39 TO STA 11+15.03

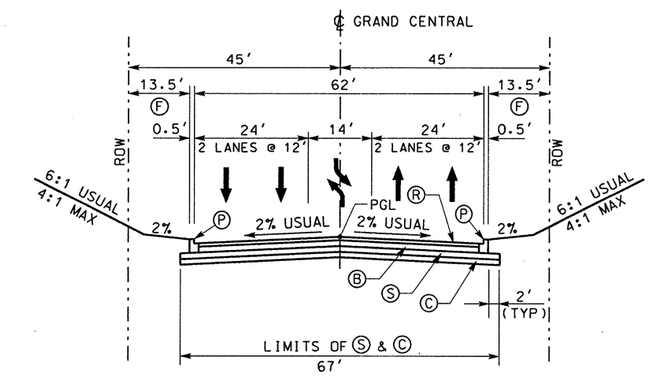

PROPOSED TYPICAL SECTION

NTS

GRAND CENTRAL

STA 13+52.57 TO STA 14+98.44

STATE OF TEXAS
CHARLES M. SHINE
62999
REGISTERED PROFESSIONAL ENGINEER

The seal appearing on this document was authorized by Charles Shine P.E. 62999, on September 30, 1999.

DATE	BY	REV	REVISION
6/3/99	DV	1	OFFSETS
9/29/99	DV	2	GRAND CENTRAL STA LIMITS

© 1999 Texas Department of Transportation

Brown & Root
HOUSTON, TEXAS

LOOP 20

PROPOSED
TYPICAL SECTIONS
MCPHERSON
GRAND CENTRAL
UNIROYAL

SHEET 18 OF 19

FED RD DIV NO	STATE PROJECT NO		SHEET NO
6	C86-14-23		26
STATE	STATE DIST NO	COUNTY	
TEXAS	22	WEBB	
CONT	SECT	JOB	HIGHWAY NO
0086	14	023	LOOP 20

REF FILE(S): J01LOX01.BDR. BDR LV ON = 45.47.57.60-62

D02TSX18.DGN-13 06-07-99 BAR_HO_ES05 \HCIVIL\CF0039\PHASE2

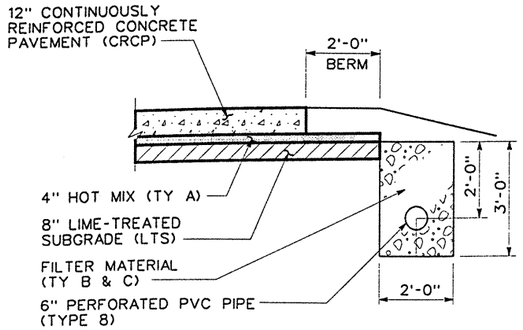

UNDERDRAIN SYSTEM TO BE PAYED FOR UNDER ITEM 556 "PIPE UNDERDRAINS". MEASURE AND PAY BY THE LINEAR FOOT.

OUTFALL WILL BE THE NEAREST MANHOLE AND/OR INLET CONNECTING TO THE UNDERGROUND DRAINAGE SYSTEM. USE 6" NON-PERFORATED PVC PIPE(TYPE10)TO CONNECT TO DRAINAGE SYSTEM.

8" LIME TREATED SUBGRADE (LTS) SHALL BE PROCESSED WITH 4.5% LIME.

ROADWAY UNDERDRAIN SYSTEM

NTS

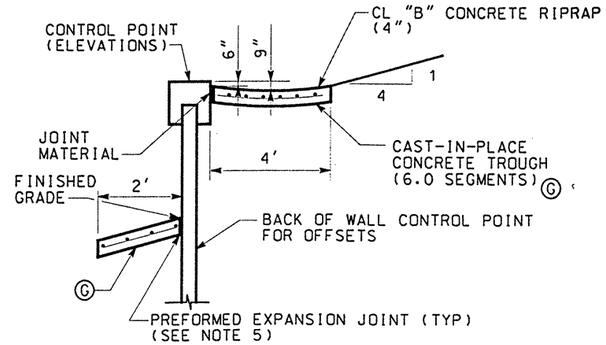

TYPICAL WALL SECTION

NTS

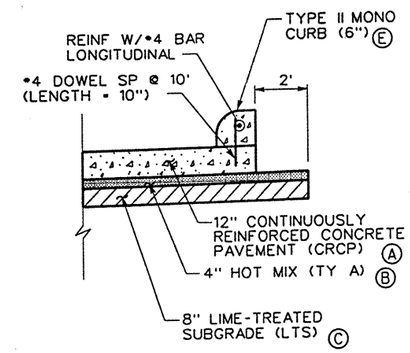

CURB DETAIL

NTS

LEGEND:

- Ⓐ CONC PAV (CONT REINF HY STL)(12")
- Ⓑ ASPH CONC PAV (TY A)(4")
- Ⓒ LIME TREATED SUBGRADE (8")
- Ⓓ SINGLE SLOPE CONCRETE BARRIER (SSCB) (TYPE 2)
- Ⓔ TYPE II MONO CURB (6")
- Ⓕ CELL FIBER MULCH SEED (PERM) (RURAL)(CLAY)
- Ⓖ CLASS B RIPRAP (4")
- Ⓗ CONC SIDEWALK (4")
- Ⓘ CONC MEDIAN (6")
- Ⓙ SINGLE SLOPE TRAFFIC RAIL(SSTR) w/ DRAIN SLOTS
- Ⓚ RETAINING WALL
- Ⓛ METAL BEAM GUARD FENCE
- Ⓜ BRICK PAVERS
- Ⓝ REMOVE ASPH CONC PAV
- Ⓞ REMOVE CONC PAV
- Ⓟ TYPE II CURB AND GUTTER (6")
- Ⓠ CONCRETE DRIVEWAYS (6")
- Ⓡ ASPH CONC PAV (TY D)(2")
- Ⓢ ASPH CONC PAV (TY A)(8")
- Ⓣ PLANE ASPH CONC PAV (0 - 1")
- Ⓤ SINGLE SLOPE TRAFFIC RAIL (SSTR)
- Ⓥ CHAINLINK FENCE (6')
- Ⓦ ROADWAY UNDERDRAIN
- Ⓧ WHEELCHAIR RAMP TYPE B

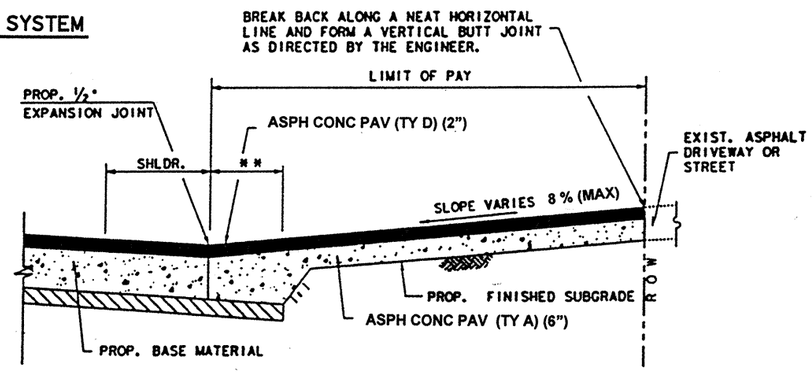

PROPOSED DRIVEWAY AND INTERSECTION DETAIL ASPHALT @ ASPHALT ROADWAY

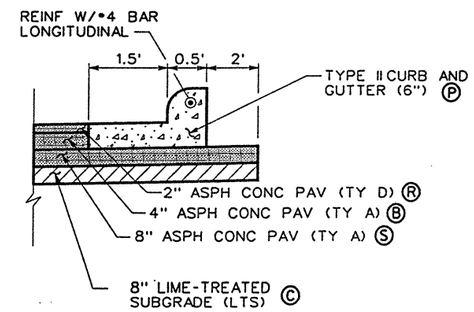

CURB AND GUTTER DETAIL

NTS

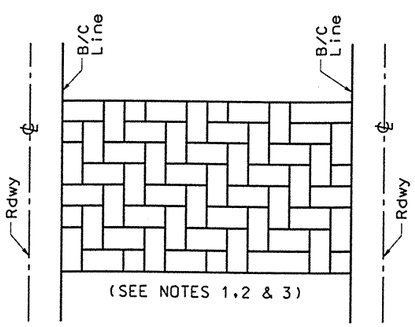

LANDSCAPE PAVERS

NTS

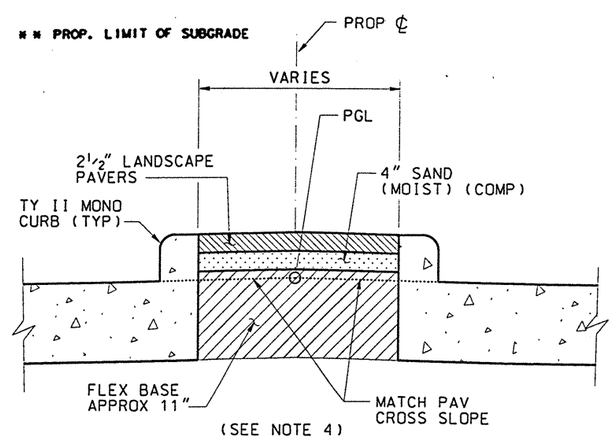

LANDSCAPE PAVERS

NTS

NOTES:

1. (BRICK RUNNING WITH HERRINGBONE PATTERN)
2. RUN OF BRICK SHALL BE PERPENDICULAR TO THE CENTER LINE OF RDWY. BRICK DIMENSION SHALL BE NOMINAL 4" X 8" (TYP).
3. COLOR PATTERN TO BE DETERMINED BY ENGINEER.
4. WORK & MATERIALS REQUIRED FOR SAND AND FLEX BASE AT MEDIAN WILL NOT BE PAID FOR DIRECTLY BUT SHALL BE CONSIDERED SUBSIDIARY TO BID ITEM.
5. PREFORMED EXPANSION JOINT WILL NOT BE PAID FOR DIRECTLY BUT SHALL BE CONSIDERED SUBSIDIARY TO BID ITEM 432 RIPRAP (CONC)(CL B).

REV. 6-25-99

STATE OF TEXAS
CHARLES M. SHINE
62999
REGISTERED PROFESSIONAL ENGINEER

The seal appearing on this document was authorized by Charles Shine P.E. 62999, on June 3, 1999

DATE	BY	REV	REVISION
6/3/99	BW	01	#4 LONG. BAR

© 1998 Texas Department of Transportation

Brown & Root
HOUSTON, TEXAS

LOOP 20
IH 35

MISCELLANEOUS ROADWAY DETAILS

SHEET 19 OF 19

FED RD DIV NO	STATE PROJECT NO		SHEET NO
6			27
STATE	STATE DIST NO		COUNTY
TEXAS	22		WEBB
CONT	SECT	JOB	HIGHWAY NO
0086	14	023	LOOP 20

REF FILE(S): J01LOX01.BDR. BDR LV DN = 45.47.57.60-62

D02MDX01.DGN-06 03-02-99 BAR_HO_ES05 \HCWL\CF0039\PHASE2

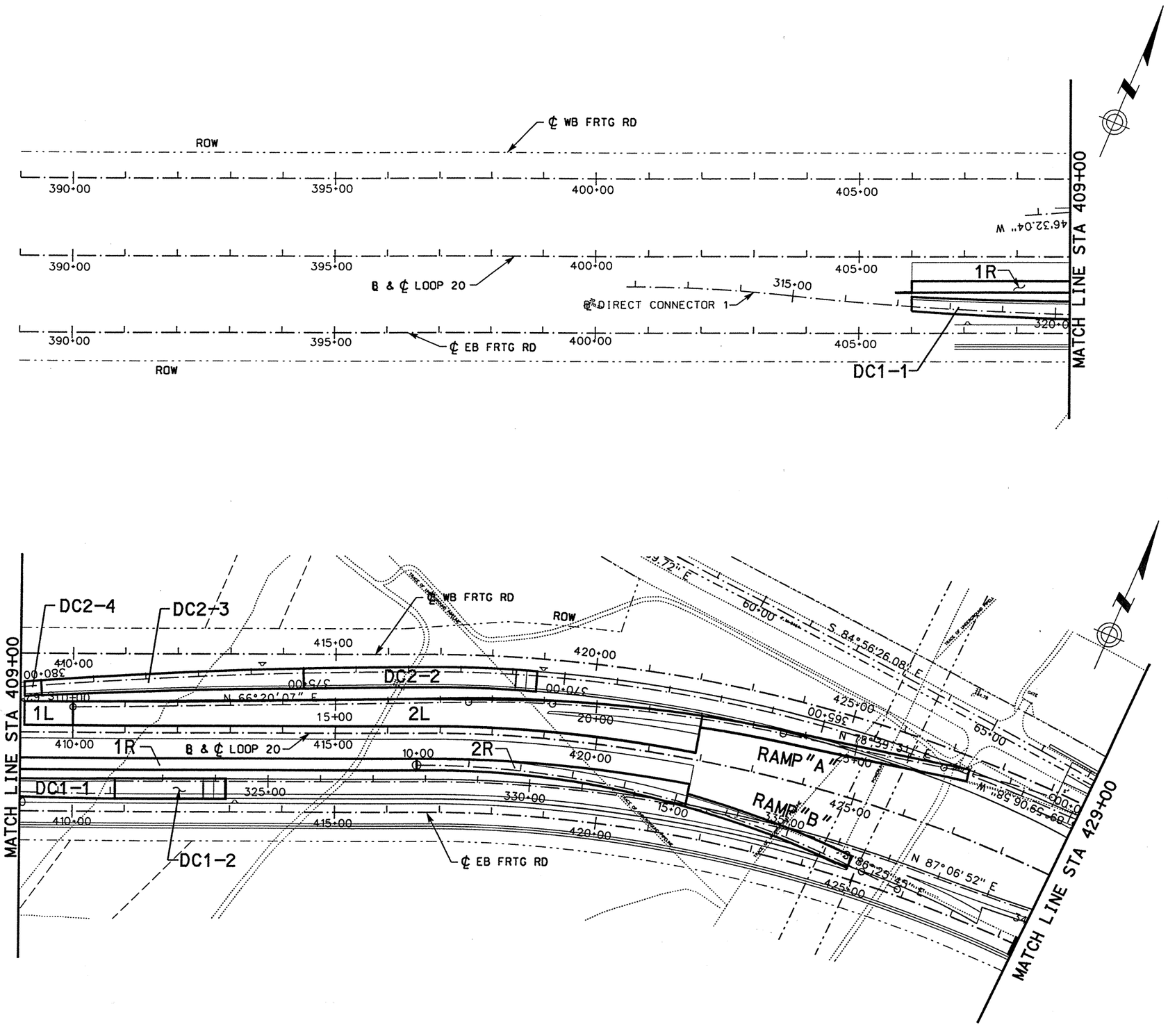

STATE OF TEXAS
CHARLES M. SHINE
62999
REGISTERED PROFESSIONAL ENGINEER

The seal appearing on this document was authorized by Charles Shine P.E. 62999, on April 2, 1999.

DATE	BY	REV	REVISION

© 1999 Texas Department of Transportation

Brown & Root
HOUSTON, TEXAS

LOOP 20

BASIS OF ESTIMATE ROADWAY

0 100 200
SCALE: 1"=200'

SHEET 1 OF 11

FED RD DIV NO	STATE PROJECT NO		SHEET NO
6	C86-14-23		28
STATE	STATE DIST NO		COUNTY
TEXAS	22		WEBB
CONT	SECT	JOB	HIGHWAY NO
0086	14	023	LOOP 20

D02LBX01.DGN-06 03-18-99 BAR_HO_ES05 \HCIVIL\CF0039\PHASE2

REF FILE(S): J01LOX01.DRN, DRN LV ON =
REF FILE(S): J01LOX01.ROW, ROW LV ON =
J01LOX01.FND, FND LV ON =
J01LOX01.BCK, BCK LV ON =
J01LOX01.ALG, ALG LV ON =
J01LOX01.EOP, EOP LV ON =
J01LOX01.BDR, BDR LV ON = 5,45,57,60-63

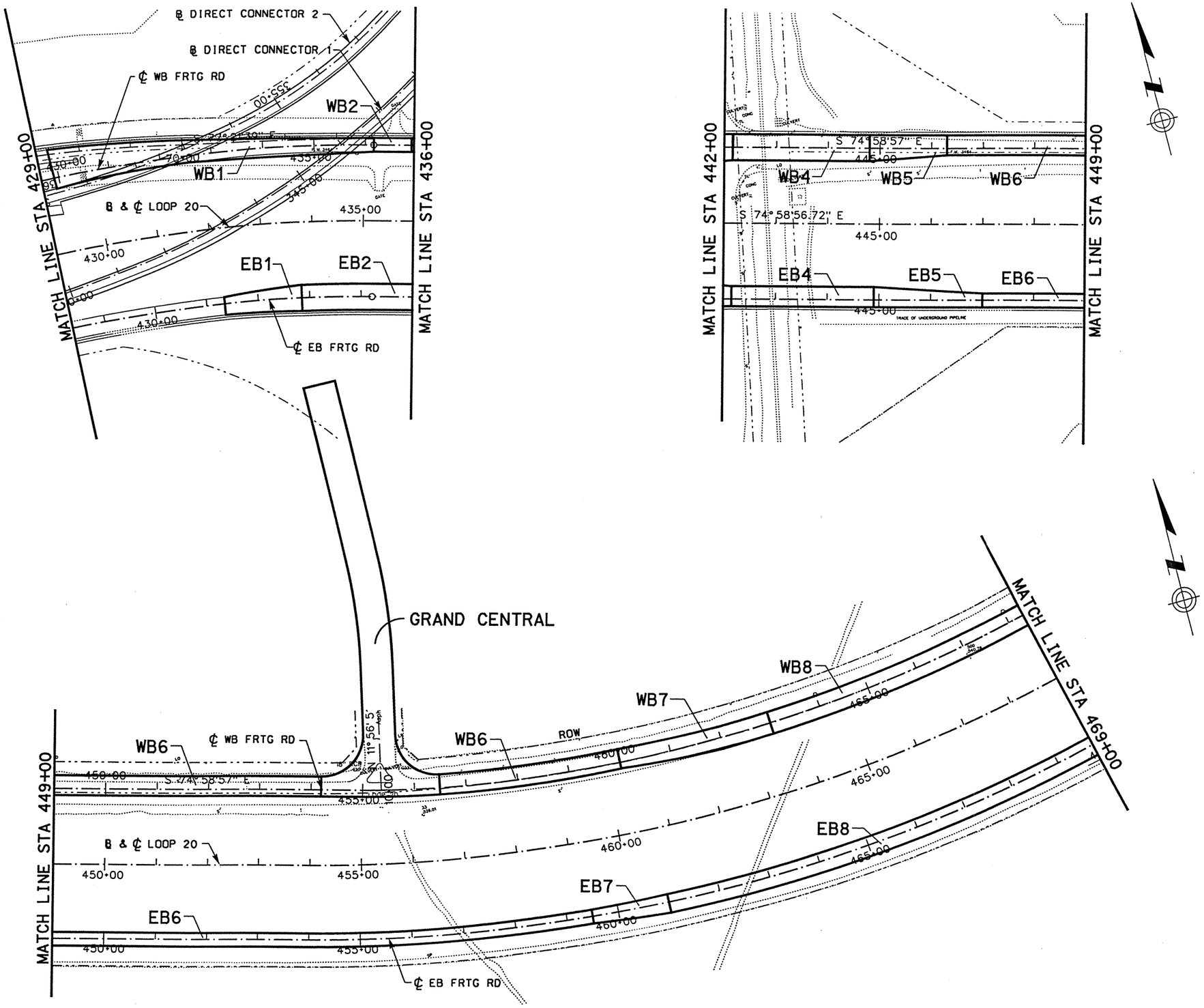

STATE OF TEXAS
CHARLES M. SHINE
62999
REGISTERED PROFESSIONAL ENGINEER

The seal appearing on this document was authorized by Charles Shine P.E. 62999, on April 2, 1999.

DATE	BY	REV	REVISION

© 1999 Texas Department of Transportation

Brown & Root
HOUSTON, TEXAS

LOOP 20

BASIS OF ESTIMATE ROADWAY

0 100 200
SCALE: 1"=200'

SHEET 2 OF 11

FED RD DIV NO	STATE PROJECT NO		SHEET NO
6	C86-14-23		29
STATE	STATE DIST NO		COUNTY
TEXAS	22		WEBB
CONT	SECT	JOB	HIGHWAY NO
0086	14	023	LOOP 20

D02LBX02.DGN-04 03-18-99 BAR_HO_ES05 \HCIVIL\CF0039\PHASE2

REF FILE(S): J01LOX01.DRN, DRN LV ON =
REF FILE(S): J01LOX01.ROW, ROW LV ON =
J01LOX01.FND, FND LV ON =
J01LOX01.BCK, BCK LV ON =
J01LOX01.ALG, ALG LV ON =
J01LOX01.EOP, EOP LV ON =
J01LOX01.BDR, BDR LV ON = 5,45,57,60-63

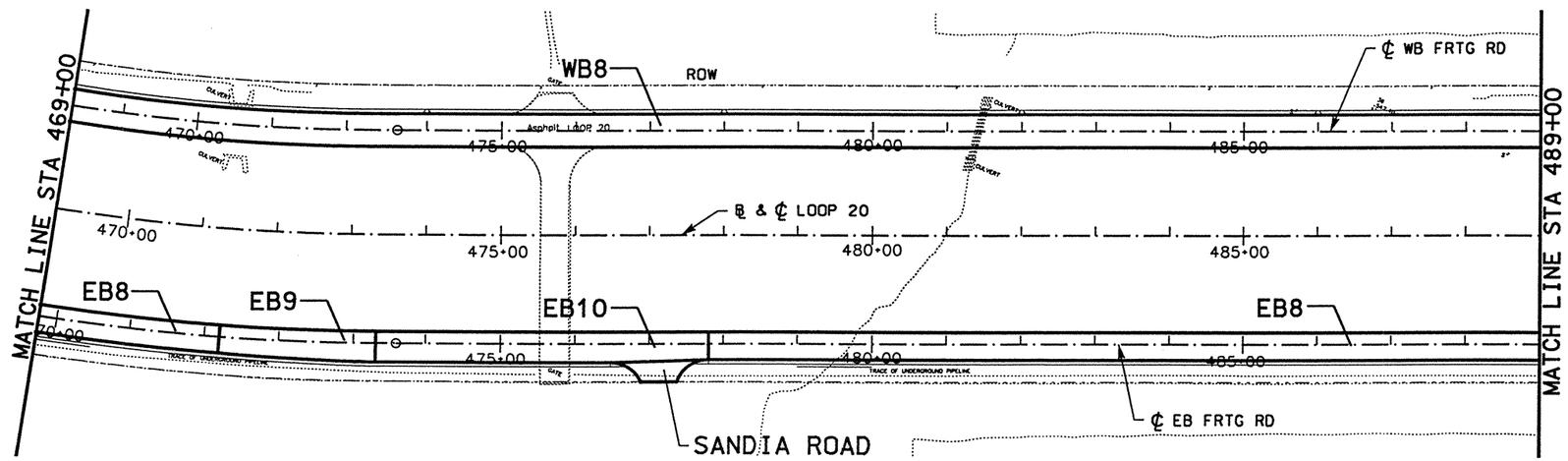

STATE OF TEXAS
CHARLES M. SHINE
62999
REGISTERED PROFESSIONAL ENGINEER

The seal appearing on this document was authorized by Charles Shine P.E. 62999, on April 2, 1999.

DATE	BY	REV	REVISION

© 1999 Texas Department of Transportation

Brown & Root
HOUSTON, TEXAS

LOOP 20

BASIS OF ESTIMATE
ROADWAY

0 100 200
SCALE: 1"=200'

SHEET 3 OF 11

FED RD DIV NO	STATE PROJECT NO		SHEET NO
6	C86-14-23		30
STATE	STATE DIST NO		COUNTY
TEXAS	22		WEBB
CONT	SECT	JOB	HIGHWAY NO
0086	14	023	LOOP 20

D02LBX03.DGN-05 03-18-99 BAR_HO_ES05 \HCIVIL\CF0039\PHASE2

REF FILE(S): J01LOX01.DRN, DRN
LV ON =
LV ON =
LV ON =
LV ON =
LV ON =
LV ON =

REF FILE(S): J01LOX01.ROW, ROW LV ON =
J01LOX01.FND, FND LV ON =
J01LOX01.BCK, BCK LV ON =
J01LOX01.ALG, ALG LV ON =
J01LOX01.EOP, EOP LV ON =
J01LOX01.BDR, BDR LV ON = 5,45,57,60-63

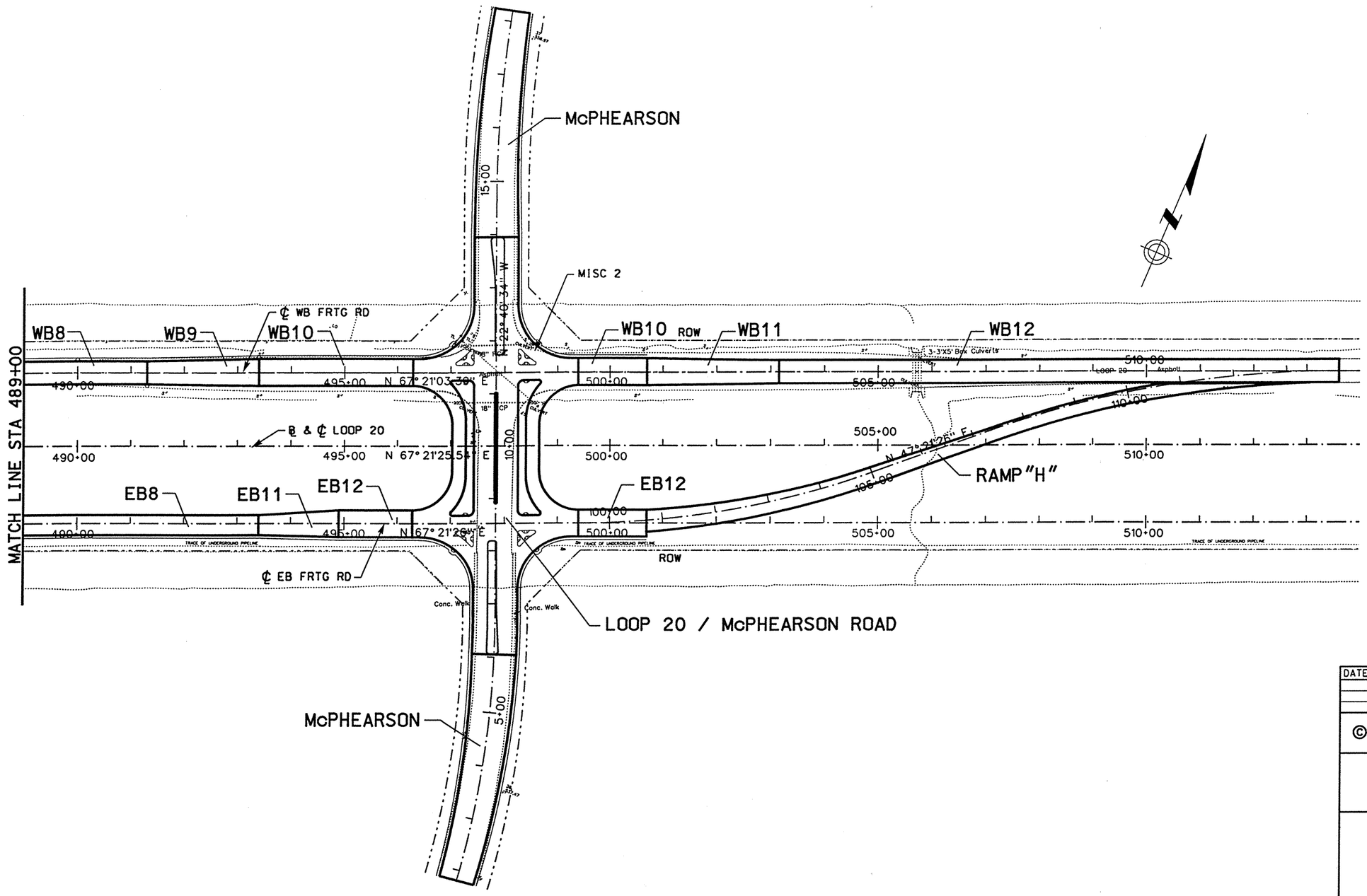

STATE OF TEXAS
CHARLES M. SHINE
62999
REGISTERED PROFESSIONAL ENGINEER

The seal appearing on this document was authorized by Charles Shine P.E. 62999, on April 2, 1999

DATE	BY	REV	REVISION

© 1999 Texas Department of Transportation

Brown & Root
HOUSTON, TEXAS

LOOP 20

BASIS OF ESTIMATE
ROADWAY

0 100 200
SCALE: 1"=200'

SHEET 4 OF 11

FED RD DIV NO	STATE PROJECT NO	SHEET NO
6	C86-14-23	31

STATE	STATE DIST NO	COUNTY
TEXAS	22	WEBB

CONT	SECT	JOB	HIGHWAY NO
0086	14	023	LOOP 20

D02LBX04.DGN-01 03-18-99 BAR_HO_ES05 \HCIVIL\CF0039\PHASE2

REF FILE(S): J01LOX01.DRN, DRN LV ON = 5,45,57,60-63
J01LOX01.ROW, ROW LV ON =
J01LOX01.FND, FND LV ON =
J01LOX01.BCK, BCK LV ON =
J01LOX01.ALG, ALG LV ON =
J01LOX01.EDP, EDP LV ON =
J01LOX01.BDR, BDR LV ON =

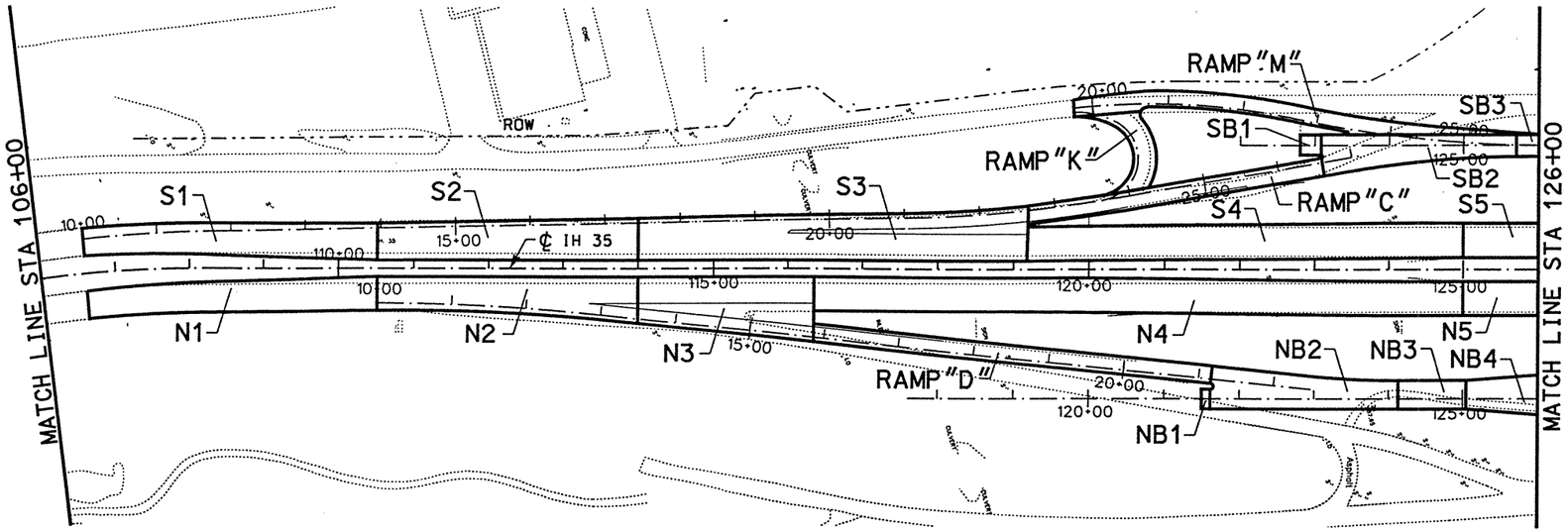

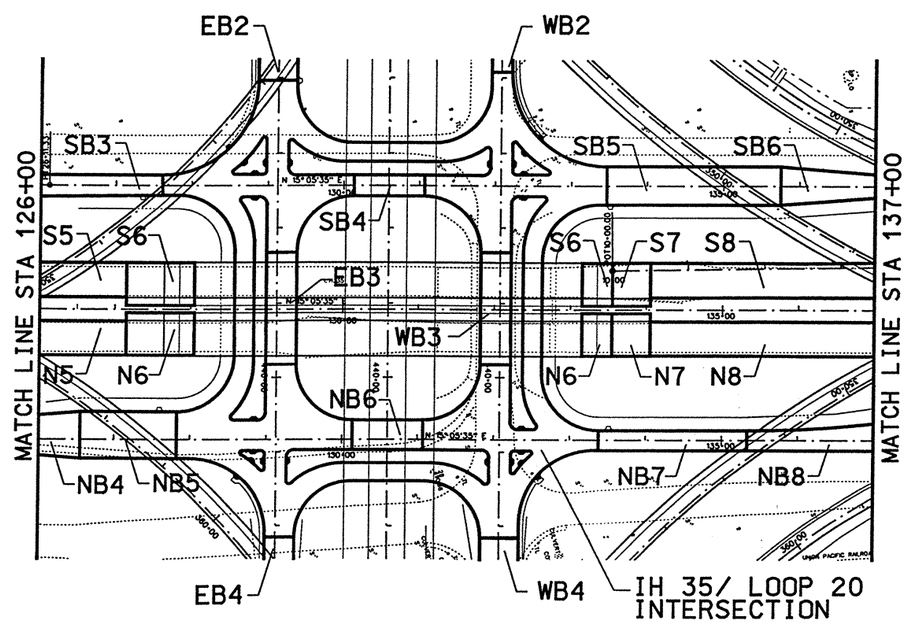

STATE OF TEXAS
CHARLES M. SHINE
62999
REGISTERED PROFESSIONAL ENGINEER

The seal appearing on this document was authorized by Charles Shine P.E. 62999, on April 2, 1999.

DATE	BY	REV	REVISION

© 1999 Texas Department of Transportation

Brown & Root
HOUSTON, TEXAS

IH 35

BASIS OF ESTIMATE
ROADWAY

0 100 200
SCALE: 1"=200'

SHEET 5 OF 11

FED RD DIV NO	STATE PROJECT NO		SHEET NO
6	NH-99(462)		32
STATE	STATE DIST NO		COUNTY
TEXAS	22		WEBB
CONT	SECT	JOB	HIGHWAY NO
0018	06	131	IH 35

D021BX01.DGN-04 03-18-99 BAR_HO_ES05 \HCIVIL\CF0039\PHASE2

REF FILE(S): J01LOX01.BER, BER LV ON = 1-13,15-49,51-63

REF FILE(S): J01LOX01.ROW, ROW LV ON = 1-61,63
J01LOX01.FND, FND LV ON = 1-34,36-63
J01LOX01.BCK, BCK LV ON = 1-16,18-24,26,27,30
J01LOX01.ALG, ALG LV ON = 1-8,10,11,13-16,18-21,23-26,28-36,38,39
J01LOX01.EOP, EOP LV ON = 1-5,7-17,19-23,25-47
J01LOX01.BDR, BDR LV ON = 5,45,57,60-63

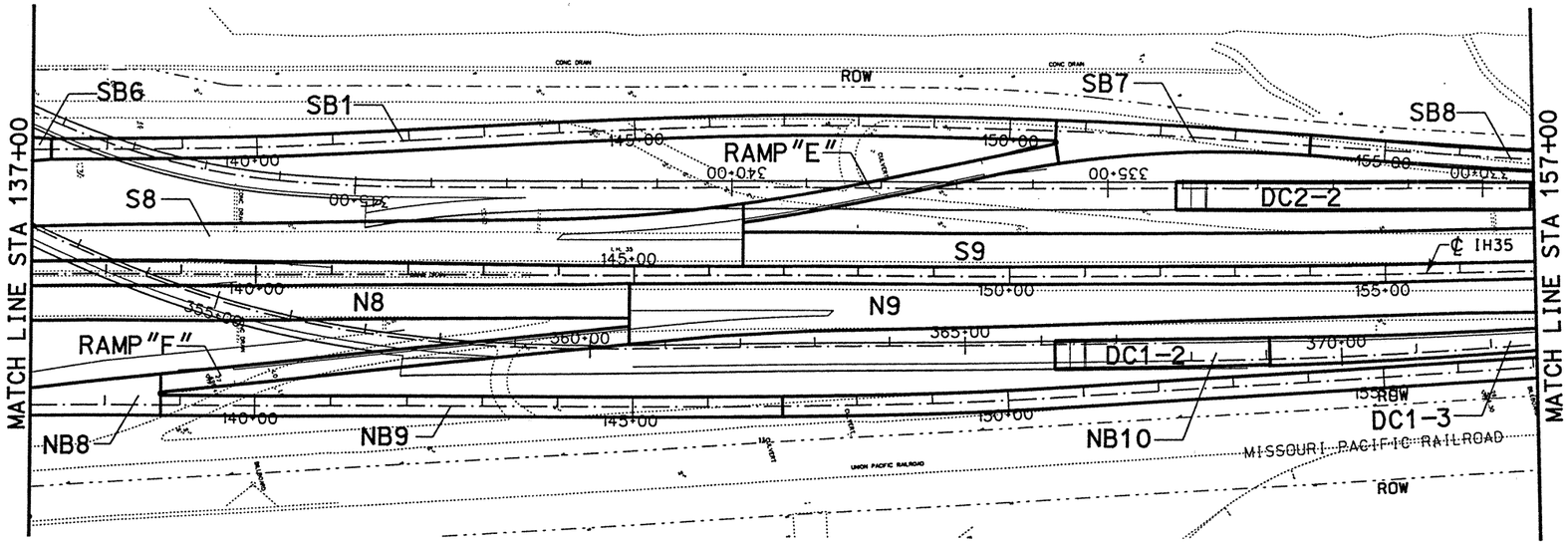

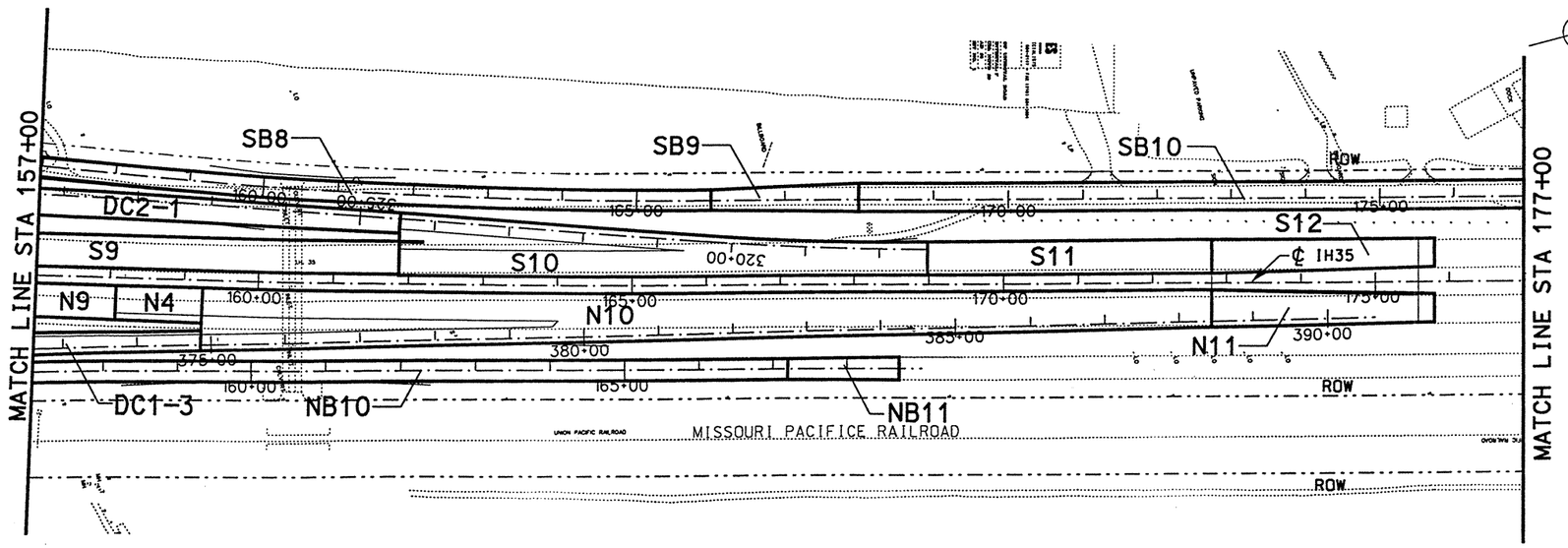

STATE OF TEXAS
CHARLES M. SHINE
62999
REGISTERED PROFESSIONAL ENGINEER

The seal appearing on this document was authorized by Charles Shine P.E. 62999, on April 2, 1999.

DATE	BY	REV	REVISION

© 1999 Texas Department of Transportation

Brown & Root
HOUSTON, TEXAS

IH 35

BASIS OF ESTIMATE
ROADWAY

0 100 200
SCALE: 1"=200'

SHEET 6 OF 11

FED RD DIV NO	STATE PROJECT NO		SHEET NO
6	NH-99(462)		33
STATE	STATE DIST NO	COUNTY	
TEXAS	22	WEBB	
CONT	SECT	JOB	HIGHWAY NO
0018	06	131	IH 35

0021BX02.DGN-05 03-18-99 BAR_HO_ES05 \HCIVIL\CF0039\PHASE2

REF FILE(S): J01LOX01.BER, BER LV ON = 1-13,15-63
LV ON =
LV ON =
LV ON =
LV ON =
LV ON =

REF FILE(S): J01LOX01.BDR, BDR LV ON = 5-45,57,60-63
J01LOX01.EOP, EOP LV ON = 1-17,19-47
J01LOX01.ALG, ALG LV ON = 1,2,4-8,10,11,13-15,18,19,24-35,38,39
J01LOX01.BCK, BCK LV ON = 1-16,18,24,26-28,30,32,36,37,39,41-53,55,56,58-63
J01LOX01.FND, FND LV ON = 1-34,36-63
J01LOX01.ROW, ROW LV ON = 1-61,63

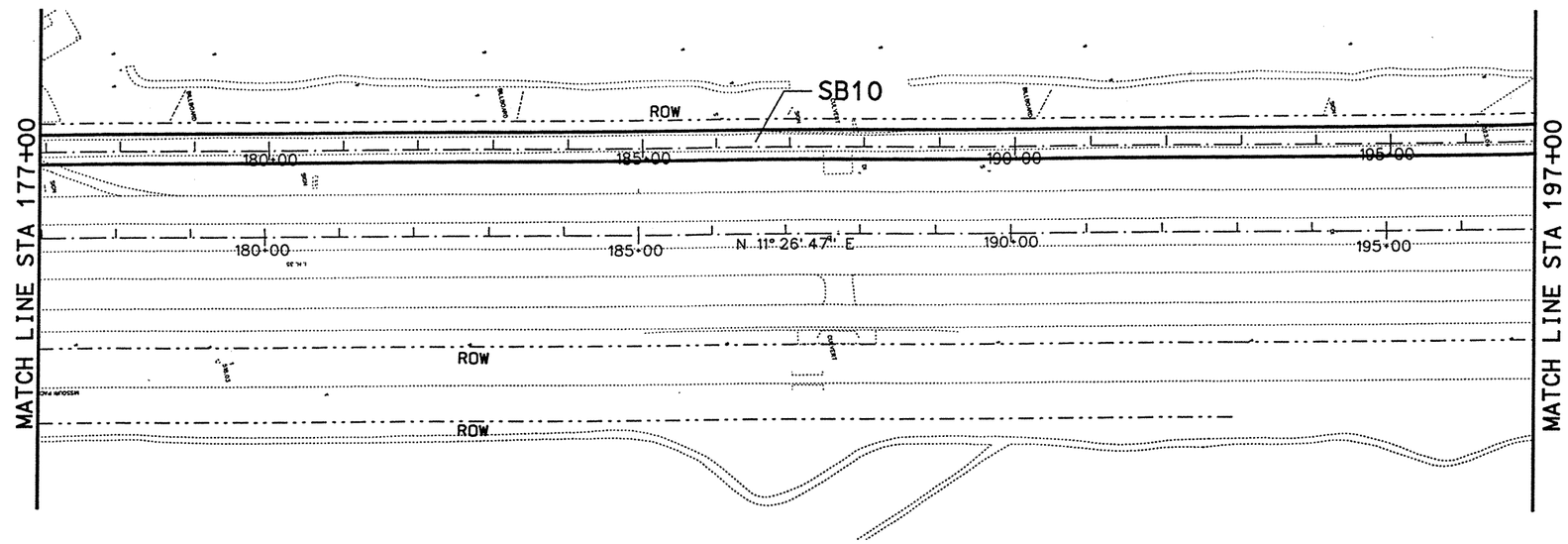

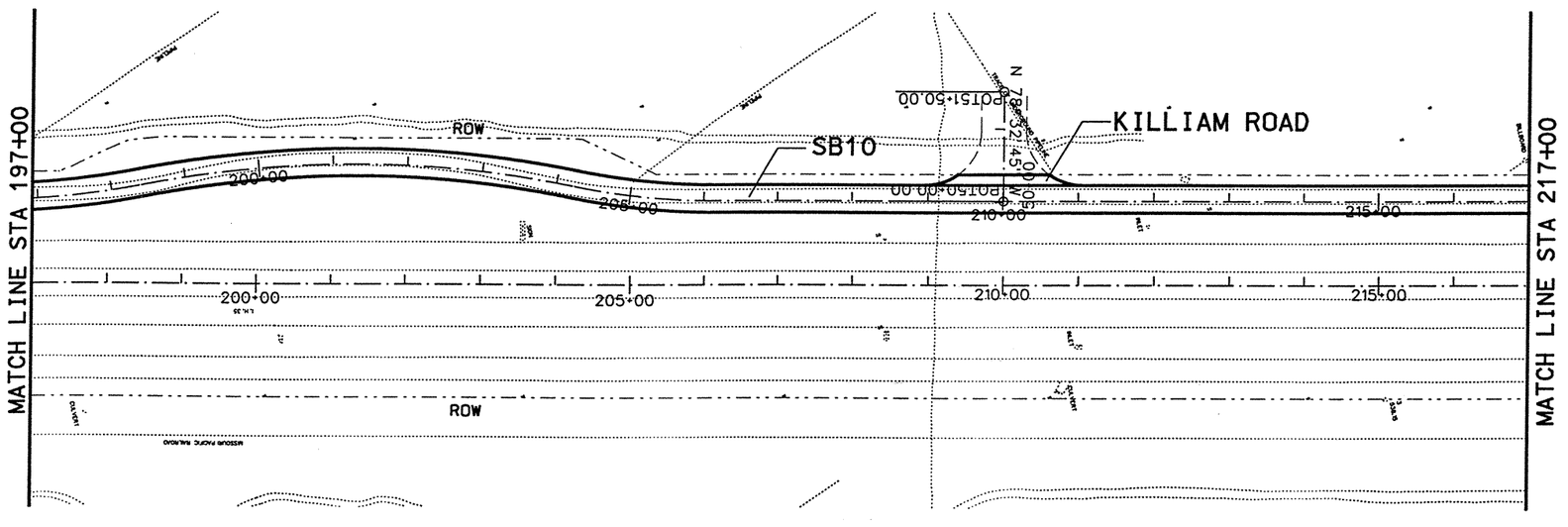

J01LOX01.ROW, ROW LV ON = 1-61.63
J01LOX01.FND, FND LV ON = 1-34.36-63
J01LOX01.BCK, BCK LV ON = 1-16.18.24.26-28.30.32.36.37.39.41-53.55.56.58-63
J01LOX01.ALG, ALG LV ON = 1.2.4-8.10.11.13-15.18.19.24-35.38.39
J01LOX01.EOP, EOP LV ON = 1-17.19-47
J01LOX01.BDR, BDR LV ON = 5.45.57.60-63
REF FILE(S): J01LOX01.BER, BER LV ON = 1-13.15-63
REF FILE(S): J01LOX01.BER, BER LV ON =
LV ON =
LV ON =
LV ON =
LV ON =

STATE OF TEXAS
CHARLES M. SHINE
62999
REGISTERED
PROFESSIONAL ENGINEER

The seal appearing on this document was authorized by Charles Shine P.E. 62999, on April 2, 1999.

DATE	BY	REV	REVISION

© 1999 Texas Department of Transportation

Brown & Root
HOUSTON, TEXAS

IH 35

BASIS OF ESTIMATE
ROADWAY

0 100 200
SCALE: 1"=200'

SHEET 7 OF 11

FED RD DIV NO	STATE PROJECT NO	SHEET NO
6	NH-99(462)	34

STATE	STATE DIST NO	COUNTY
TEXAS	22	WEBB

CONT	SECT	JOB	HIGHWAY NO
0018	06	131	IH 35

D02BX03.DGN-01 03-18-99 BAR_HO_ES05 \HCIVIL\CF0039\PHASE2

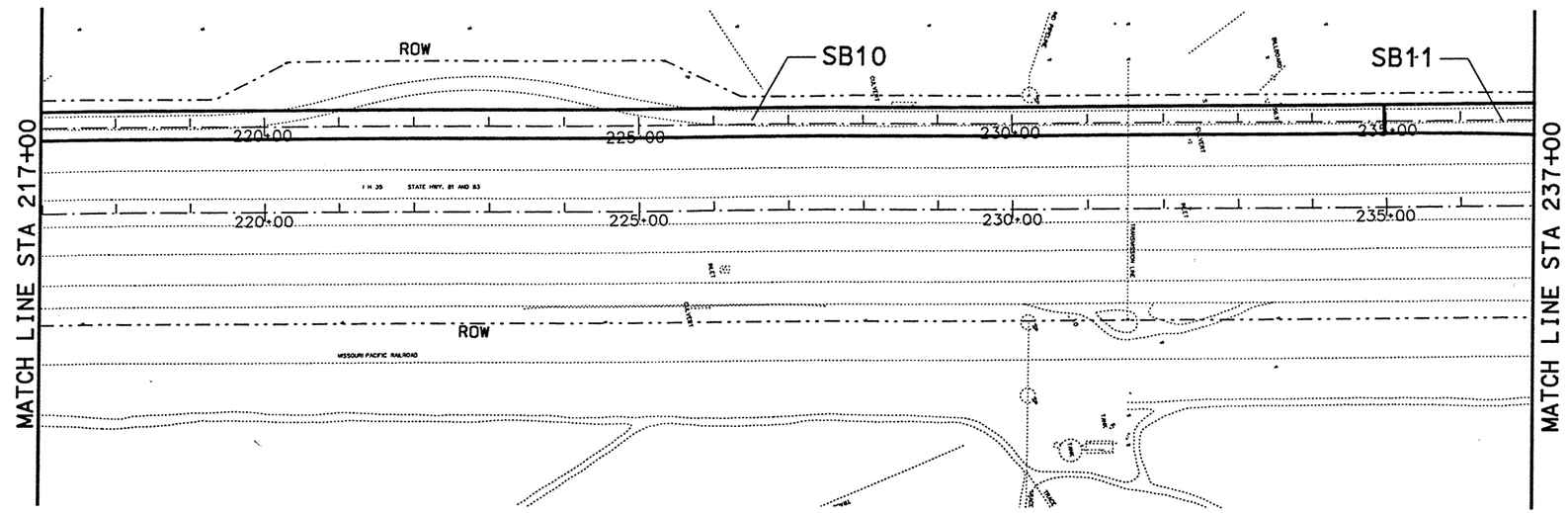

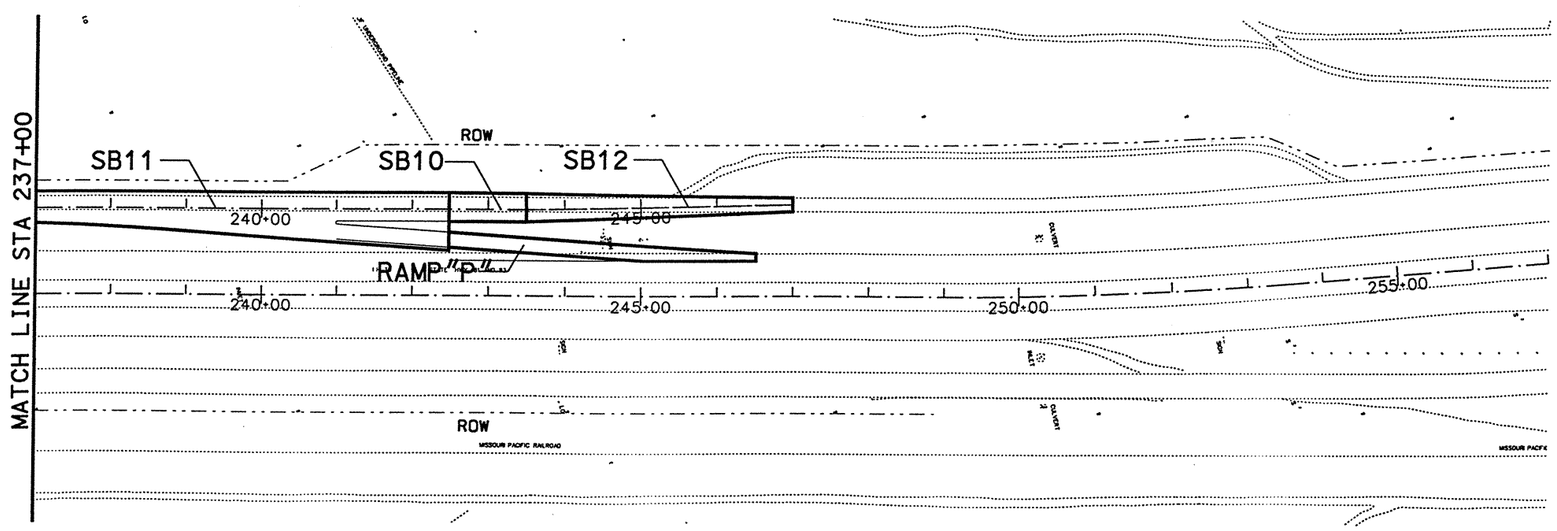

STATE OF TEXAS
CHARLES M. SHINE
62999
REGISTERED PROFESSIONAL ENGINEER

The seal appearing on this document was authorized by Charles Shine P.E. 62999, on April 2, 1999

DATE	BY	REV	REVISION

© 1999 Texas Department of Transportation

Brown & Root
HOUSTON, TEXAS

IH 35

BASIS OF ESTIMATE
ROADWAY

0 100 200
SCALE: 1"=200'

SHEET 8 OF 11

FED RD DIV NO	STATE PROJECT NO	SHEET NO
6	NH-99(462)	35

STATE	STATE DIST NO	COUNTY
TEXAS	22	WEBB

CONT	SECT	JOB	HIGHWAY NO
0018	06	131	IH 35

D028BX04.DGN-01 03-18-99 BAR_HO_ES05 \HCIVIL\CF0039\PHASE2

REF FILE(S): J01LOX01.ROW, ROW LV ON = 1-61,63
J01LOX01.FND, FND LV ON = 1-34,36-63
J01LOX01.BCK, BCK LV ON = 1-16,18,24,26-28,30,32,36,37,39,41-53,55,56,58-63
J01LOX01.ALG, ALG LV ON = 1,2,4-8,10,11,13-15,18,19,24-35,38,39
J01LOX01.EOP, EOP LV ON = 1-17,19-47
J01LOX01.BDR, BDR LV ON = 5,45,57,60-63

REF FILE(S): J01LOX01.BER, BER LV ON = 1-13,15-63
LV ON =
LV ON =
LV ON =
LV ON =
LV ON =

CSJ 0086-14-023

ROADWAY QUANTITIES – BASIS OF ESTIMATE – LOOP 20

ITEM NO. DESCRIPTION			204-503	260-510	262-512	314-502	360-507	3116-504	3116-504	3116-501
BASIS OF ESTIMATE CALLOUT	LOCATION		SPRINKLING (DUST CONTROL)	LIME TRT SUBGR (DC) (8 IN)	LIME (TY A SLURRY) OR (TY B)	EMULS ASPH (BS OR SUBGR TRT) (MS-2)	CONC PAV (CONT REINF HY STL) (12 IN)	HOT MIX (TYP D) (2 IN)	HOT MIX (TYP D) (4 IN)	HOT MIX (TYP A) (8 IN)
	BEGINNING STATION	ENDING STATION	MG	SY	TON	GAL	SY	TON	TON	TON
Loop 20 EB Frontage										
EB1	431+35.00	432+85.00	2	783.33	7.05	156	716.67		172.33	
EB2	432+85.00	436+00.00	3	1350.98	12.16	269	1252.73		297.22	
EB3	438+32.00	439+81.87	2	732.70	6.59	146	666.09		161.19	
EB4	442+00.00	444+90.00	2	1385.56	12.47	275	1256.67		304.82	
EB5	444+90.00	447+00.00	2	863.33	7.77	172	770.00		189.93	
EB6	447+00.00	459+50.00	2	4305.56	38.75	856	3750.00		947.22	
EB7	459+50.00	461+00.00	2	608.33	5.48	121		59.58	119.17	267.67
EB8	461+00.00	472+20.00	2	5226.67	47.04	1039		520.18	1040.36	2299.73
EB9	472+20.00	474+20.00	2	977.78	8.80	194		97.78	195.56	430.22
EB10	474+20.00	477+80.00	2	2144.79	19.30	426		215.41	430.82	943.71
EB8	477+80.44	493+40.00	2	7277.95	65.51	1447		724.33	1448.66	3202.30
EB11	493+40.00	494+90.00	2	808.33	7.28	161	741.67		177.83	
EB12	494+90.00	496+43.32	3	936.96	8.43	186	868.81		206.13	
EB12	499+25.33	500+70.00	3	884.09	7.96	176	819.80		194.50	
Loop 20 WB Frontage										
WB1	429+13.30	436+16.46	3	4945.56	44.51	983	4633.04		1088.02	
WB2	435+18.87	435+92.43	2	253.37	2.28	50	220.68		55.74	
WB3	438+32.12	439+82.12	2	733.33	6.60	146	666.67		161.33	
WB4	442+15.12	444+80.00	3	1618.71	14.57	322	1500.99		356.12	
WB5	444+80.00	446+30.00	3	816.67	7.35	162	750.00		179.67	
WB6	446+30.00	460+00.00	2	6545.56	58.92	1301	5936.67		1440.02	
WB7	460+00.00	463+00.00	2	1516.67	13.65	302		152.17	304.33	667.33
WB8	463+00.00	491+30.00						1526.07		
WB9	491+30.00	493+40.00	3	1201.67	10.82	239		60.96	60.96	66.09
WB10	493+40.00	496+28.10	3	1760.61	15.85	350	1632.57		387.33	
WB10	499+40.14	500+70.00	3	793.59	7.14	158	735.87		174.59	
WB11	500+70.00	503+15.00	3	1401.94	12.62	279		142.24	284.47	616.86
WB12	503+15.00	513+60.00						561.98		
Loop 20 East Main Lanes										
1R	406+00.31	416+55.83	1	2814.72	25.33	560	2580.16			
2R	416+55.83	421+90.00	2	2047.65	18.43	407	1928.95			
Loop 20 West Main Lanes										
1L	409+07.79	410+00.00	3	512.28	4.61	102	471.30		112.70	
2L	410+00.00	421+90.00	3	8396.11	75.57	1669	7867.22		1847.14	
Loop 20 Ramps										
RAMP H1	100+70.14	107+40.00	2	2828.30	25.46	562		278.36	556.73	1244.45
	AREA (107+40 to end)			1432.41	12.89	285		135.06	270.12	630.26
RAMP A1	22+01.45	26+20.00	1	1209.14	10.88	240	1023.12		266.01	
	AREA (26+20 to end)			655.98	5.90	130	562.52		144.32	
RAMP B1	15+22.32	17+52.00	1	714.56	6.43	142	612.48		157.20	
	AREA (17+52 to end)			819.82	7.38	163	665.31		180.36	
Direct Connector 1										
DC1-1	317+26.90	322+08.70	2	1659.53	14.94	330	1766.60		365.10	
DC1-2	322+08.70	324+17.00	2	833.20	7.50	166	879.49		183.30	
Direct Connector 2										
DC2-2	370+93.00	375+00.00	2	1788.00	16.09	355	1887.33		393.36	
DC2-3	375+00.00	380+00.00	2	2000.00	18.00	398	2111.11		440.00	
DC2-4	380+00.00	380+31.81	2	113.10	1.02	22	98.96		24.88	
McPherson										
MP1	1+79.29	6+05.00						382.43		
	Widening			593.07	5.34	117		39.22	78.44	260.95
MP1	13+95.00	18+20.36						382.12		
	Widening			614.38	5.53	122		41.59	83.18	270.33
Loop 20/McPherson										
	INTERSECTION			12339.50	111.07	2453	11022.44		2714.69	

REV. 6-25-99

STATE OF TEXAS
CHARLES M. SHINE
62999
REGISTERED PROFESSIONAL ENGINEER

The seal appearing on this document was authorized by Charles Shine P.E. 62999, on June 3, 1999

DATE	BY	REV	REVISION
6/03/99	DV	01	QUANTITIES

© 1999 Texas Department of Transportation

Brown & Root
HOUSTON, TEXAS

LOOP 20

BASIS OF ESTIMATE

SHEET 9 OF 11

FED RD DIV NO	STATE PROJECT NO	SHEET NO
6	C86-14-23	36

STATE	STATE DIST NO	COUNTY
TEXAS	22	WEBB

CONT	SECT	JOB	HIGHWAY NO
0086	14	023	LOOP 20

D030SX10.DGN-02 06-02-99 BAR_HO_ES05 \HCIVIL\CF0039\PHASE2

CSJ 0018-06-131

ROADWAY QUANTITIES - BASIS OF ESTIMATE - IH 35

ITEM NO. DESCRIPTION			204-503	260-510	262-514	314-502	360-507	3116-504	3116-504	3116-501
BASIS OF ESTIMATE CALLOUT	LOCATION		SPRINKLING (DUST CONTROL)	LIME TRT SUBGR (DC) (8 IN)	LIME (TY A SLURRY) OR (TY B)	EMULS ASPH (BS OR SUBGR TRT) (MS-2)	CONC PAV (CONT REINF HY STL) (12 IN)	HOT MIX (TYP D) (2 IN)	HOT MIX (TY A) (4 IN)	HOT MIX (TYP A) (8 IN)
	BEGINNING STATION	ENDING STATION	MG	SY	TON	GAL	SY	TON	TON	TON
North Main Lanes (IH35)										
N1	106+60.00	110+50.00	2	1993.33	17.94	396		200.20	400.40	877.07
N2	110+50.00	114+00.00	3	2275.00	20.48	452	2119.44		500.50	
N3	114+00.00	116+35.00	4	2062.78	18.57	410	1958.33		453.81	
N4	116+35.00	125+00.00	3	4805.56	43.25	955	4421.11		1057.22	
N5	125+00.00	127+15.00	3	1242.22	11.18	247	1146.67		273.29	
N6	127+15.00	128+05.23	3	621.58	5.59	124	581.48		136.75	
N6	133+15.23	133+55.23	3	275.56	2.48	55	257.78		60.62	
N7	133+55.23	134+05.00	3	342.86	3.09	68	320.74		75.43	
N8	134+05.00	144+95.00	3	6176.67	55.60	1228	5692.22		1358.87	
N9	144+95.00	158+08.21	4	9922.03	89.31	1972	9338.38		2182.85	
N4	158+08.21	159+24.00	3	643.28	5.79	128	591.82		141.52	
N10	159+24.00	172+80.00	4	10546.67	94.93	2097	9944.00		2320.27	
N11	172+80.00	175+58.00	2	1451.78	13.07	289		146.10	292.21	638.78
South Main Lanes (IH35)										
S1	106+60.00	110+50.00	3	2795.00	25.16	556		288.38	576.77	1229.80
S2	110+50.00	114+00.00	3	2450.00	22.05	487	2294.44		539.00	
S3	114+00.00	119+19.00	3	3719.50	33.48	739	3488.83		818.29	
S4	119+19.00	125+00.00	3	3292.33	29.63	654	3034.11		724.31	
S5	125+00.00	127+15.00	3	1218.33	10.97	242	1122.78		268.03	
S6	127+15.00	128+05.23	3	621.58	5.59	124	581.48		136.75	
S6	133+15.23	133+55.23	3	275.56	2.48	55	257.78		60.62	
S7	133+55.23	134+05.00	3	342.86	3.09	68	320.74		75.43	
S8	134+05.00	146+45.00	4	9644.44	86.81	1917	9093.33		2121.78	
S9	146+45.00	161+88.00	3	8743.67	78.70	1738	8057.89		1923.61	
S10	161+88.00	168+98.58	4	5566.21	50.10	1107	5250.40		1224.57	
S11	168+98.58	172+80.00	3	2117.00	19.07	421	1949.48		466.81	
S12	172+80.00	175+58.00	2	1420.89	12.79	282		142.71	285.41	625.19
NB Frontage										
NB1	121+50.00	121+61.45	2	40.71	0.37	8	35.62		8.96	
NB2	121+61.45	124+13.24	3	1482.76	13.35	295	1370.86		326.21	
NB3	124+13.24	125+05.00	2	438.41	3.95	87	397.63		96.45	
NB4	125+05.00	126+55.00	3	916.67	8.25	182	850.00		201.67	
NB5	126+55.00	127+82.68	4	950.51	8.56	189	893.76		209.11	
NB6	130+13.69	131+06.97	2	456.04	4.10	91	414.58		100.33	
NB7	133+38.00	135+33.34	2	672.84	6.06	134	586.02		148.02	
NB8	135+33.34	138+74.17	2	1704.15	15.34	339	1552.67		374.91	
NB9	138+74.17	147+00.00	2	2844.53	25.60	565	2477.49		625.80	
NB10	147+00.00	167+20.00	2	6957.78	62.63	1383		666.60	1333.20	3061.42
NB11	167+20.00	168+70.00	2	533.33	4.80	106		51.33	102.67	234.67
SB Frontage										
SB1	122+80.00	123+08.00	2	96.44	0.87	19	84.00		21.22	
SB2	123+08.00	125+94.70	2	1449.43	13.05	288	1322.01		318.87	
SB3	125+94.70	127+61.19	2	573.47	5.16	114	499.47		126.16	
SB4	130+13.49	131+06.77	2	331.66	2.99	66	290.20		72.97	
SB5	133+46.45	135+75.00	3	1396.69	12.57	278	1295.12		307.27	
SB6	135+75.00	137+25.00	2	725.00	6.53	144	658.33		159.50	
SB1	137+25.00	150+60.45	2	4599.88	41.40	914	4006.35		1011.97	
SB7	150+60.45	154+00.00	2	1754.34	15.79	349	1603.43		385.96	
SB8	154+00.00	166+00.00	2	4133.33	37.20	822		396.00	792.00	1818.67
SB9	166+00.00	168+00.00	2	811.11	7.30	161		79.44	158.89	356.89
SB10	168+00.00	234+97.52	2	31255.09	281.32	6213		3110.63	6221.25	13752.24
SB11	234+97.52	242+50.00	3	5100.14	45.91	1014		524.23	1048.46	2244.06
SB10	242+50.00	243+50.00	2	466.67	4.20	93		46.44	92.89	205.33
SB12	243+50.00	247+00.00	2	1244.44	11.20	247		119.78	239.56	547.56
Ramps										
RAMP C1	22+62.59	26+55.12	1	1221.20	10.99	243	1046.75		268.66	
RAMP D1	15+86.13	21+16.88	1	1651.22	14.86	328	1415.33		363.27	
RAMP E1	22+91.07	27+15.04	1	1319.02	11.87	262	1130.59		290.18	
RAMP F1	11+03.51	17+28.89	1	1945.63	17.51	387	1667.68		428.04	
RAMP K1	AREA			517.43	4.66	103		49.60	99.19	227.67
RAMP M1	AREA			1474.14	13.27	293		136.74	273.49	648.62
RAMP P1	41+00.87	42+50.00	1	463.96	4.18	92		43.74	87.49	204.14
RAMP P2	AREA (42+50 to end)			619.07	5.57	123		58.26	116.52	272.39
I35/Loop 20										
	INTERSECTION			16067.38	144.62	2453	11022.46		2714.65	

REV. 6-25-99

STATE OF TEXAS
CHARLES M. SHINE
62999
REGISTERED PROFESSIONAL ENGINEER

The seal appearing on this document was authorized by Charles Shine P.E. 62999, on June 3, 1999.

DATE	BY	REV	REVISION
6/3/99	DV	01	QUANTITIES

© 1999 Texas Department of Transportation

Brown & Root
HOUSTON, TEXAS

IH 35

BASIS OF ESTIMATE

SHEET 10 OF 11

FED RD DIV NO	STATE PROJECT NO	SHEET NO
6	NH-99(462)	37

STATE	STATE DIST NO	COUNTY
TEXAS	22	WEBB

CONT	SECT	JOB	HIGHWAY NO
0018	06	131	IH 35

D03QSX11.DGN-02 06-02-99 BAR_HO_ES05 \HCIVIL\CF0039\PHASE2

CSJ 0018-05-057

ROADWAY QUANTITIES – BASIS OF ESTIMATE – UNIROYAL

ITEM NO. DESCRIPTION			204-503	260-510	262-512	314-502	345-515	360-507	3116-504	3116-501
BASIS OF ESTIMATE CALLOUT	LOCATION		SPRINKLING (DUST CONTROL)	LIME TRT SUBGR (DC) (8 IN)	LIME (TY A SLURRY) OR (TY B)	EMULS ASPH (BS OR SUBGR TRT) (MS-2)	ASPH STAB BS (GR 4) (4 IN)	CONC PAV (CONT REINF HY STL) (12 IN)	HOT MIX (TYP D) (2 IN)	HOT MIX (TYP A) (8 IN)
	BEGINNING STATION	ENDING STATION	MG	SY	TON	GAL	TON	SY	TON	TON
Uniroyal										
	ENDS			3505.45	31.55	697	771.20	3230.22		
	11+02.03	13+80.45	2	1500.37	13.50	298	330.08	1376.63		
	18+02.50	19+02.34	2	360.55	3.25	72	69.56		34.78	158.64
	22+00.00	23+00.00	2	368.33	3.32	73	71.26		35.63	162.07
	18+02.50	19+02.50	1	311.11	2.80	62	58.67		29.33	136.89
	20+97.50	21+97.50	1	316.67	2.85	63	59.89		29.94	139.33

STATE OF TEXAS
CHARLES M. SHINE
62999
REGISTERED PROFESSIONAL ENGINEER

The seal appearing on this document was authorized by Charles Shine P.E. 62999, on June 3, 1999.

DATE	BY	REV	REVISION
6/3/99	DV	01	QUANTITIES

© 1999 Texas Department of Transportation

Brown & Root
HOUSTON, TEXAS

UNIROYAL ROAD

BASIS OF ESTIMATE

SHEET 11 OF 11

FED RD DIV NO	STATE PROJECT NO	SHEET NO
6	NH-99(462)	37A

STATE	STATE DIST NO	COUNTY
TEXAS	22	WEBB

CONT	SECT	JOB	HIGHWAY NO
0018	06	131	IH 35

D030SX12.DGN-02 06-02-99 BAR_HO_ES05 \HCIVIL\CF0039\PHASE2

REV. 6-25-99

GENERAL NOTES AND SPECIFICATION DATA--

---GENERAL---

DUE TO THE NEED TO REDUCE CONGESTION AT THE EXISTING MILO INTERCHANGE, CERTAIN FACILITIES WILL NEED TO BE COMPLETED BY JULY 5, 2000. PLEASE REFER TO SPECIAL PROVISION "SCHEDULE OF LIQUIDATED DAMAGES /INCENTIVE BONUS" FOR ADDITIONAL REQUIREMENTS.

FOR THIS PROJECT, PARTNERING SHALL BE MANDATORY.

THE EXISTING TOPSOIL AND GRASS SHALL BE PLACED IN WINDROWS ALONG THE EDGE OF THE GRADING OPERATIONS OR AS DIRECTED/APPROVED BY THE ENGINEER. AFTER GRADING OPERATIONS ARE COMPLETED, THE TOPSOIL AND GRASS SHALL BE SPREAD UNIFORMLY ON ALL SLOPES AND DITCHES. THIS WORK WILL NOT BE PAID FOR DIRECTLY BUT WILL BE SUBSIDIARY TO THE VARIOUS BID ITEMS.

THE CONTRACTOR WILL BE EXPECTED TO SCHEDULE WORK AT MCPHERSON AND UNIROYAL INTERSECTIONS SO THAT THE BLACK BASE PLACEMENT OPERATIONS WILL FOLLOW THE SUBGRADE WORK AS CLOSELY AS PRACTICAL IN ORDER TO REDUCE THE HAZARD TO THE TRAVELING PUBLIC AND PREVENT UNDUE DELAY FROM WET WEATHER.

WHEN CONSTRUCTION OPERATIONS NECESSITATE THE MOVING OF MAIL BOXES, THE CONTRACTOR SHALL PLACE THEM WITH POST FIRMLY IN THE GROUND AT NEARBY LOCATIONS AS APPROVED BY THE ENGINEER. UPON COMPLETION OF THE PROJECT, FINAL PLACEMENT OF THE MAILBOXES WILL BE AS LOCATED BY THE ENGINEER. THIS WORK WILL NOT BE PAID FOR DIRECTLY, BUT SHALL BE SUBSIDIARY TO THE VARIOUS BID ITEMS.

FIBER OPTIC CABLE SYSTEMS MAY BE BURIED ON THE RAILROAD'S PROPERTY. PROTECTION OF THE FIBER OPTIC CABLE SYSTEM IS OF EXTREME INPORTANCE SINCE ANY BREAK COULD DISRUPT SERVICE TO USERS RESULTING IN BUSINESS INTERRUPTION AND LOSS OF REVENUE AND PROFITS. THE CONTRACTOR SHALL TELEPHONE THE RAILROAD AT 1-800-336-9193 (A 24-HOUR NUMBER) TO DETERMINE IF FIBER OPTIC CABLE IS BURIED ANYWHERE ON THE RAILROAD'S PREMISES TO BE USED BY THE STATE. IF IT IS, THE STATE WILL TELEPHONE THE TELECOMMUNICATIONS COMPANY(IES) INVOLVED, ARRANGE FOR A CABLE LOCATOR AND MAKE ARRANGEMENTS FOR RELOCATION OR OTHER PROTECTION OF THE FIBER OPTIC CABLE PRIOR TO BEGINNING ANY WORK ON THE RAILROAD'S PREMISES.

THE CONTRACTOR WILL BE REQUIRED TO MOW GRASS AND WEEDS WITHIN THE PROJECT LIMITS NOT MORE THAN THREE TIMES PER YEAR AS DIRECTED BY THE ENGINEER. THIS WORK WILL NOT BE PAID FOR DIRECTLY BUT SHALL BE CONSIDERED INCIDENTAL TO THE VARIOUS PAY ITEMS.

GENERAL NOTES AND SPECIFICATION DATA--

---GENERAL---, CONT'D

REFERENCES TO MANUFACTURER'S TRADE OR CATALOG NUMBERS ARE FOR THE PURPOSE OF IDENTIFICATION ONLY, AND THE CONTRACTOR WILL BE PERMITTED TO FURNISH LIKE MATERIALS OF OTHER MANUFACTURERS PROVIDED THEY ARE OF EQUAL QUALITY AND COMPLY WITH SPECIFICATIONS FOR THIS PROJECT AND ARE APPROVED BY THE ENGINEER.

ALL TESTING, TRAINING, DOCUMENTATION AND WARRANTY ON ELECTRONIC COMMUNICATION, DATA MANAGEMENT AND CONTROL EQUIPMENT SHALL BE AS PER SPECIAL SPECIFICATION ITEM 6504, "TESTING, TRAINING, DOCUMENTATION AND WARRANTY".

WHERE CONSTRUCTION EASEMENTS SHOWN ON THE PLANS ARE CROSSED BY FENCES AND WORK IS REQUIRED BEYOND THE FENCES, THE CONTRACTOR SHALL REMOVE AND REPLACE THE FENCES TO THE SATISFACTION OF THE ENGINEER AND THE WORK AND MATERIALS REQUIRED SHALL BE CONSIDERED INCIDENTAL TO THE VARIOUS BID ITEMS.

FM 3464, UNIROYAL, AND MCPHERSON ROADS SHALL BE OPEN TO TRAFFIC AT ALL TIMES. ACCESS TO ALL DRIVES AND SIDE ROADS, BOTH PUBLIC AND PRIVATE, ARE TO BE MAINTAINED AT ALL TIMES.

WORK SHALL BE CONDUCTED SO THAT ALL MACHINES ARE OFF THE ROAD BY SUNSET, UNLESS OTHERWISE DIRECTED BY THE ENGINEER IN WRITING.

THE CONTRACTOR'S ATTENTION IS DIRECTED TO THE FACT THAT BOTH OVERHEAD AND UNDERGROUND UTILITIES MAY EXIST IN THE VICINITY OF THE CONSTRUCTION. THE EXACT LOCATION OF UNDERGROUND UTILITIES IS NOT CERTAIN. THE CONTRACTOR SHALL CONTACT THE AREA UTILITY COMPANIES FOR EXACT LOCATIONS AT LEAST 48 HOURS PRIOR TO DRILLING OR COMMENCING ANY WORK TO PREVENT ANY DAMAGE OR INTERFERENCE WITH PRESENT UTILITIES. THIS ACTION HOWEVER, SHALL IN NO WAY BE INTERPRETED AS RELIEVING THE CONTRACTOR FOR HIS/HER RESPONSIBILITIES UNDER THE TERMS OF THE CONTRACT AS SET OUT IN THE PLANS AND SPECIFICATIONS. THE CONTRACTOR SHALL REPAIR ANY DAMAGE CAUSED BY HIS/HER OPERATIONS AT HIS/HER OWN EXPENSE AND SHALL RESTORE FACILITIES TO SERVICE IN A TIMELY MANNER.

DURING THE EXECUTION OF THE WORK, UTMOST CARE SHALL BE EXERCISED TO PREVENT DAMAGE TO ANY UTILITIES, STRUCTURES OR RIGHT-OF-WAY. THE CONTRACTOR SHALL BE RESPONSIBLE FOR CONTACTING, LOCATING, AND PROTECTING ALL UNDERGROUND UTILITIES AND STRUCTURES. THE ENGINEER MAY ASSIST THE CONTRACTOR IN LOCATING UNDERGROUND UTILITIES AND STRUCTURES. HOWEVER, ANY DAMAGE TO EXISTING UTILITIES OR STRUCTURES SHALL BE REPAIRED AT THE CONTRACTOR'S EXPENSE. IF IN THE COURSE OF THE WORK, UNDERGROUND UTILITIES OR STRUCTURES ARE ENCOUNTERED AND ARE IN CONFLICT WITH THE WORK, THE CONTRACTOR SHALL CONTACT THE ENGINEER WHO WILL

GENERAL NOTES AND SPECIFICATION DATA--

---GENERAL---, CONT'D
DIRECT THE NECESSARY ADJUSTMENTS.

ALL CONSTRUCTION EQUIPMENT INVOLVED IN ROADWAY WORK ON OR WITHIN 30 FEET OF THE ROADWAY SHALL BE EQUIPPED WITH PERMANENTLY MOUNTED APPROVED 360 DEGREE REVOLVING OR STROBE WARNING LIGHT WITH AMBER LENS. THIS LIGHT SHALL HAVE A MINIMUM LENS OF 5 INCHES AND A DIAMETER OF 5 INCHES. THIS LIGHT SHALL HAVE A MOUNTING HEIGHT OF NOT LESS THAN 6 FEET ABOVE THE ROADWAY SURFACE AND SHALL BE VISIBLE FROM ALL SIDES. THIS EQUIPMENT SHALL ALSO HAVE ATTACHED AT EACH SIDE OF THE REAR END OF THE VEHICLE AN APPROVED ORANGE WARNING FLAG MOUNTED NOT LESS THAN 6 FEET ABOVE THE ROADWAY SURFACE.

THE CONTRACTOR SHALL PROTECT ALL AREAS OF THE RIGHT OF WAY WHICH ARE NOT INCLUDED IN THE ACTUAL LIMITS OF THE PROPOSED CONSTRUCTION AREAS FROM DESTRUCTION. CARE SHALL BE EXERCISED TO PREVENT DAMAGE TO TREES, VEGETATION AND OTHER NATURAL SURROUNDINGS. THE AREAS NOT DISTURBED SHALL BE DETERMINED BY THE ENGINEER. THE CONTRACTOR, AT HIS EXPENSE, SHALL RESTORE ANY AREA DISTURBED AS A RESULT OF HIS OPERATIONS TO A CONDITION AS GOOD AS, OR BETTER THAN, THAT PRESENT PRIOR TO HIS CONTRACT.

UNLESS OTHERWISE AUTHORIZED BY THE ENGINEER, ALL OBSTRUCTIONS, OBJECTIONABLE MATERIAL AND CONCRETE SHALL BE DISPOSED OF BY HAULING IT OFF THE PROJECT AND OUT OF SIGHT FROM STATE HIGHWAYS TO DISPOSAL SITES ARRANGED FOR BY THE CONTRACTOR AND SATISFACTORY TO THE ENGINEER.

ALL SIGNS WITH GREEN BLUE, RED ORANGE, YELLOW AND BROWN BACKGROUNDS SHALL BE FABRICATED WITH HIGH SPECIFIC INTENSITY REFLECTIVE SHEETING (TYPE C), AND ALL SIGNS WITH WHITE BACKGROUNDS SHALL BE FABRICATED WITH ENGINEER GRADE REFLECTIVE SHEETING (TYPE A). ALSO, ALL WHITE LEGENDS AND BORDERS SHALL BE WHITE HIGH SPECIFIC INTENSITY REFLECTING (TYPE C). REFLECTORIZED REMOVABLE LEGEND WILL NOT BE ALLOWED.

ERECTION AND/OR REMOVAL OF POLES AND LUMINAIRES LOCATED NEAR ANY OVERHEAD OR UNDERGROUND ELECTRICAL LINES SHALL BE ACCOMPLISHED USING ESTABLISHED INDUSTRY AND UTILITY SAFETY PRACTICES. THE CONTRACTOR SHALL CONSULT WITH THE APPROPRIATE UTILITY COMPANY PRIOR TO BEGINNING SUCH WORK.

IF ANY OVERHEAD OR UNDERGROUND ELECTRICAL LINES NEED TO BE DE-ENERGIZED, THE CONTRACTOR SHALL CALL THE POWER COMPANY TO DO THIS WORK. ANY COST ASSOCIATED WITH DE-ENERGIZING THE ELECTRICAL LINES AND/OR ANY OTHER PROTECTIVE MEASURES REQUIRED SHALL BE AT THE CONTRACTOR'S EXPENSE.

GENERAL NOTES AND SPECIFICATION DATA--

---GENERAL---, CONT'D
WHEN THE CONTRACTOR IS WORKING NEAR ANY POWER LINES, IT IS HIS/HER RESPONSIBILITY TO COMPLY WITH THE APPROPRIATE SECTIONS OF TEXAS STATE LAW AND FEDERAL REGULATIONS RELATING TO THE TYPE OF WORK INVOLVED.

AT THE CONTRACTOR'S OPTION, ELECTRICAL GROUNDING CONNECTIONS AND PERMISSIBLE SPLICES MAY BE MADE BY THE THERMAL FUSION PROCESS, CADWELD, THERMAWELD OR EQUAL, IN LIEU OF BOLTED CONNECTIONS AND SPLICES.

---INTELLIGENT TRANSPORTATION SYSTEM WORK - GENERAL---

ALL DESIGN APPROVAL TESTS, FACTORY DEMONSTRATION TESTS AND STAND ALONE TESTS SHALL BE COMPLETED BEFORE COMMUNICATION TESTING BEGINS.

AFTER SATISFACTORY COMPLETION OF ALL TESTS, ALL ELECTRONIC EQUIPMENT SHALL BE PLACED IN OPERATION. FINAL ACCEPTANCE WILL NOT BE MADE UNTIL THE ELECTRONIC EQUIPMENT HAS OPERATED SATISFACTORILY FOR A PERIOD OF NOT LESS THAN 90 DAYS AND IN FULL COMPLIANCE WITH THE REQUIREMENTS OF THE PLANS AND SPECIFICATIONS.

THE CONTRACTOR SHALL BE FULLY RESPONSIBLE FOR THE ELECTRONIC EQUIPMENT DURING THE TEST PERIOD. THE CONTRACTOR SHALL AT HIS EXPENSE, MAKE ANY ADJUSTMENTS OR REPAIRS WHICH MAY BE REQUIRED AND REMEDY ANY DEFECTS OR DAMAGES THAT MAY OCCUR.

ALL EQUIPMENT REMOVED AS SHOWN IN THE PLANS SHALL BE DELIVERED TO A LOCATION SPECIFIED BY THE ENGINEER.

THE DATA COMMUNICATIONS TEST FOR THE CONTRACTOR SUPPLIED COMMUNICATIONS SYSTEM WILL BE PERFORMED BY THE DEPARTMENT USING DEPARTMENTAL SUPPLIED DATA COMMUNICATIONS TEST SOFTWARE AND CONTRACTOR SUPPLIED PERIPHERAL COMMUNCATIONS HARDWARE (TRANSPORTATION MANAGEMENT CONSOLE, LCU, AND LDM) AND CONTRACTOR SUPPLIED TEST EQUIPMENT.

THE CONTRACTOR SHALL PROVIDE TECHNICAL DOCUMENTATION FOR ALL COMPONENTS OF THE COMMUNICATION NETWORK UPON DELIVERY OF EQUIPMENT TO THE TRAFFIC MANAGEMENT SECTION FOR DATA COMMUNICATIONS TESTING. THE CONTRACTOR SHALL PROVIDE AS-BUILT CABLE INTERCONNECTION DIAGRAMS AND COMMUNCATIONS NETWORK SCHEMATICS AT LEAST 120 DAYS PRIOR TO THE START OF DATA COMMUNICATION TESTING.

FOR THE DATA COMMUNICATIONS TEST, ONE OR MORE COMPUTER SYSTEMS WILL BE DESIGNATED AS CHANNEL CONTROLLERS AND INSTALLED IN THE CONTROL CENTER. ADDITIONAL COMPUTER SYSTEMS, WITH ANY REQUIRED MODEMS, WILL BE DESIGNATED AS LOCAL CONTROLLERS AND INSTALLED IN FIELD LOCATIONS

GENERAL NOTES AND SPECIFICATION DATA--

---INTELLIGENT TRANSPORTATION SYSTEM WORK - GENERAL---, CONT'D
DESIGNATED FOR LOCAL CONTROL UNITS AND OTHER LOCATIONS AS DESIGNATED BY THE ENGINEER.

THE DATA COMMUNICATIONS TEST WILL CONSIST OF REPEATED TRANSMISSIONS OF DATA BETWEEN THE CHANNEL CONTROLLER AND THE LOCAL CONTROLLERS. THE CHANNEL CONTROLLER WILL BROADCAST A BLOCK OF DATA ON EACH CHANNEL TO EVERY LOCAL CONTROLLER, THEN POLL AND RECEIVE A RESPONSE FROM EACH LOCAL CONTROLLER. EACH BROADCAST, POLL, AND RESPONSE SHALL CONSTITUTE A MESSAGE. THE CHANNEL CONTROLLER WILL ACCUMULATE STATISTICS FOR THE SYSTEM AS A WHOLE AND FOR EACH LOCAL CONTROLLER TO BE USED IN EVALUATING THE TRANSMISSION QUALITY OF THE COMMUNICATIONS NETWORK.

A MESSAGE ERROR IS DEFINED TO BE THE OCCURRENCE OF A PARITY ERROR, FRAMING ERROR, OR DATA ERROR IN ANY COMPONENT OF A MESSAGE. THE ERROR FREE MESSAGE RATE IS DEFINED TO BE THE RATIO OF THE NUMBER OF MESSAGES IN WHICH NO MESSAGE ERROR OCCURS TO THE TOTAL NUMBER OF MESSAGES TRANSMITTED. THE ERROR FREE MESSAGE RATE MUST EXCEED 99.99% FOR ACCEPTABLE TRANSMISSION QUALITY, BOTH FOR THE SYSTEM AS A WHOLE, AND FOR EACH INDIVIDUAL LOCAL CONTROLLER.

THE DATA COMMUNICATIONS TEST SHALL EXTEND FOR A PERIOD OF 3 DAYS. IF A FAILURE OCCURS IN ANY OF THE COMPUTER SYSTEMS, THE TEST WILL BE RESUMED AFTER REPAIRS ARE MADE. IF A FAILURE OCCURS IN ANY COMPONENT OF THE COMMUNCIATIONS NETWORK, THE TEST WILL BE RESTARTED AFTER REPAIRS ARE MADE. ALL COMPONENTS OF THE COMMUNICATIONS NETWORK MUST OPERATE AS AN INTEGRAL SYSTEM FOR THE DURATION OF THE TEST.

CONVENIENCE OUTLETS EQUIPPED WITH GROUND FAULT INTERRUPTER (GFCI) PROTECTION SHALL NOT BE USED TO SUPPLY POWER TO ANY ELECTRONIC EQUIPMENT.

---ITEM 4 SCOPE OF WORK---

AGGREGATE STOCKPILES REMAINING ON STATE'S RIGHT OF WAY 30 DAYS AFTER PROJECT'S "FINAL ACCEPTANCE" WILL BECOME THE PROPERTY OF THE TEXAS DEPARTMENT OF TRANSPORTATION. AGGREGATE STOCKPILES DEEMED UNDESIRABLE BY THE ENGINEER SHALL BE REMOVED IN ACCORDANCE WITH THE PERTINENT SPECIFICATIONS OF THIS PROJECT.

---ITEM 5 CONTROL OF THE WORK---

TO ENSURE ACCURATE MEASUREMENT FOR FINAL PAY QUANTITIES AND TO FACILITATE THE ENGINEER'S CHECK ON THE CONTRACTOR'S SURVEY WORK, THE

GENERAL NOTES AND SPECIFICATION DATA--

---ITEM 5 CONTROL OF THE WORK---, CONT'D
CONTRACTOR SHALL BE REQUIRED TO SET CONSTRUCTION STAKES BASED ON PLAN STATIONS AND AT 50 FOOT MAXIMUM INTERVALS OR AS DIRECTED BY THE ENGINEER.

---ITEM 6 CONTROL OF MATERIALS---

THE CONTRACTOR WILL BE REQUIRED TO FURNISH THE AREA ENGINEER THE MAXIMUM GROSS WEIGHTS, INCLUDING LOADS, FOR ALL VEHICLES, INCLUDING TRUCKS, TRUCK-TRACTORS, TRAILERS, SEMI-TRAILERS OR ANY COMBINATION OF SUCH VEHICLES USED TO DELIVER MATERIALS TO THE PROJECT. MAXIMUM GROSS WEIGHTS ARE TO BE DETERMINED IN ACCORDANCE WITH ITEM 6 ARTICLE 6.7 OF THE STANDARD SPECIFICATIONS.

---ITEM 100 PREPARING RIGHT OF WAY---

PRIOR TO PREPARING RIGHT OF WAY, THOSE EXISTING TREES, SHRUBS OR OTHER LANDSCAPE FEATURES DESIGNATED BY THE ENGINEER FOR PRESERVATION AS INDICATED ON THE "CONSTRUCTION LAYOUT" SHEETS AND/OR IS DIRECTED BY THE ENGINEER SHALL BE PROTECTED BY FENCING AS SHOWN ON THE PLANS. THE PROTECTION WORK SHALL BE CONSIDERED SUBSIDIARY TO THIS ITEM.

ACCEPTABLE FENCING MATERIAL FOR TREE PROTECTION SHALL BE "FENCE IT PLUS", 4 FT. H X 150 FT. L, NEW ORANGE COLOR, AS MANUFACATURED BY WHATASHADE, 3000 W. ORANGE AV., APOPKA, FLORIDA, OR APPROVED EQUAL.

THE AREA OUTSIDE THE CLEAR ZONE OR BACK SLOPE INTERCEPT LINE, WHICHEVER IS GREATER, SHALL REMAIN IN ITS NATURAL CONDITION, UNLESS OTHERWISE DIRECTED BY THE ENGINEER.

PRUNING: ALL TREES WITHIN THE LIMITS OF THE CONTRACT AND AT THE RIGHT OF WAY LINE SHALL BE PRUNED BY THE CONTRACTOR TO THE SATISFACTION OF THE ENGINEER. PRUNING SHALL BE DONE IN ACCORDANCE WITH ACCEPTED PRUNING PRACTICES AS SET FORTH BY THE NATIONAL ARBORIST ASSOCIATION IN PRUNING STANDARDS FOR SHADE TREES (CURRENT EDITION). DEAD OR DAMAGED LIMBS ON TREES, INCLUDING SUCKER-GROWTH ON TRUNKS OF TREES, ARE TO BE REMOVED. SUCH REMOVED VEGETATIVE MATERIAL SHALL BECOME THE PROPERTY OF THE CONTRACTOR AND SHALL BE REMOVED FROM THE SITE IN A MANNER ACCEPTABLE TO THE ENGINEER. UNLESS OTHERWISE NOTED ON THE PLANS, PRUNING SHALL BE ACCOMPLISHED ONCE DURING THE TERM OF THIS CONTRACT, AT DATES SPECIFIED IN THE PLANS OR AS DIRECTED BY THE ENGINEER.

GENERAL NOTES AND SPECIFICATION DATA--

---ITEM 110 EXCAVATION---

ALL HAULING OF MATERIALS WILL NOT BE PAID FOR DIRECTLY, BUT SHALL BE CONSIDERED AS SUBSIDIARY TO THE BID ITEMS INVOLVED.

PRIOR TO CONTRACT LETTING, EARTHWORK CROSS SECTIONS WILL BE AVAILABLE AT THE AREA ENGINEER'S OFFICE FOR REVIEW BY THE PROSPECTIVE BIDDERS.

EXCESS EXCAVATION SHALL BE PLACED IN AREAS AS SHOWN IN THE PLANS AND AS DIRECTED BY THE ENGINEER. THE FILL AREA DESIGNATED BY THE ENGINEER SHALL BE WITHIN ONE MILE OF THE PROJECT LIMITS.

---ITEM 132 EMBANKMENT---

THE PERCENT OF DENSITY, AS DETERMINED BY TEST METHOD TEX-113-E, SHALL BE A MINIMUM OF 95 PERCENT. DENSITY TOLERANCES WILL BE PERMITTED.

THE CONTRACTOR'S ATTENTION IS CALLED TO THE FACT THAT THE FOLLOWING NOTE FOR THIS ITEM APPLIES TO ANY MATERIAL USED FOR EMBANKMENT OTHER THAN THAT WHICH WAS EXCAVATED FROM THE ROADWAY:

EXCAVATION OF MATERIAL WHICH WOULD BE USED FOR EMBANKMENT AND WOULD RESULT IN CREATING A PIT 5 FEET OR GREATER BELOW NATURAL GROUND WITHIN 200 FEET OF ANY ROAD DESIGNATED OR MAINTAINED AS A PART OF THE SYSTEM OF ROADS UNDER THE JURISDICTION OF TXDOT, EXCEPT IN AREAS DESIGNATED IN THE PLANS, WILL NOT BE PERMITTED WITHOUT THE WRITTEN APPROVAL OF THE ENGINEER AND SUCH EXCAVATION OF MATERIAL WITHIN 200 FEET OF THE OUTSIDE EDGE OF THE TRAVEL LANE WILL NOT BE PERMITTED WITHOUT THE CONSENT OF THE GOVERNMENTAL AGENCY WHICH HAS JURISDICTION OF THE ROAD. THE SECURING OF EMBANKMENT MATERIAL BY THE EXCAVATION OF DITCHES FOR BENEFICIAL DRAINAGE PURPOSES, THE REMOVAL OF SPOIL BANKS, AND THE REMOVAL OF HILLS FOR LAND LEVELING WITHIN 200 FEET OF ANY PUBLIC ROAD WILL BE PERMITTED, PROVIDED THAT SELECTION CRITERIA IS MET. EXISTING BORROW PITS MAY BE EXTENDED TO NO CLOSER THAN PRESENT CLEARANCE OR THE 200 FEET CLEARANCE CITED ABOVE, PROVIDED THERE IS ADEQUATE NATURAL OR PLANTED VEGETATIVE SCREENING AS DETERMINED BY THE ENGINEER.

EMBANKMENT (DENSITY CONTROL) SHALL BE TYPE C WITH A MAX. P.I. OF 40. EMBANKMENT MATERIAL IN THE TOP TWO FEET BELOW THE BOTTOM OF FLEXIBLE BASE SHALL MEET THE FOLLOWING REQUIREMENTS BASED ON PRELIMINARY TESTS AND SUCH OTHER TESTS FOUND NECESSARY BY THE ENGINEER.

1. THE MATERIAL SHALL BE SUCH AS TO PRODUCE A WELL-BONDED EMBANKMENT AND SHALL HAVE A MINIMUM P.I. OF 8 AND A MAXIMUM P.I. OF 30.

GENERAL NOTES AND SPECIFICATION DATA--

---ITEM 132 EMBANKMENT---, CONT'D

THE CONTRACTOR'S ATTENTION IS CALLED TO THE FACT THAT THE PRELIMINARY TEST WILL REQUIRE APPROXIMATELY 15 DAYS AND IT IS THE CONTRACTOR'S RESPONSIBILITY TO ADVISE THE ENGINEER OF THE LOCATION OF THE SOURCE SUFFICIENTLY IN ADVANCE TO AVOID DELAY.

---ITEM 164 SEEDING FOR EROSION CONTROL---

CELLULOSE FIBER MULCH SEEDING SHALL BE APPLIED IN AREAS DESIGNATED ON THE PLANS OR AS DIRECTED BY THE ENGINEER. PRIOR TO SEEDING, THE AREAS DESIGNATED SHALL BE FINISHED TO A SMOOTH SURFACE FOR A UNIFORM APPLICATION OF SEED.

SEEDING SHALL BE ACCOMPLISHED BY THE HYDROMULCH METHOD IN TWO APPLICATIONS AS SHOWN BELOW:

1ST APPLICATION - GRASS SEED AND FERTILIZER 2ND APPLICATION - CELLULOSE FIBER MULCH SHALL BE APPLIED ACCORDING TO THE RATE SHOWN IN THE STANDARD SPECIFICATION BOOK.

FERTILIZER SHALL BE APPLIED AT THE RATE OF 100 POUNDS OF NITROGEN PER ACRE. FERTILIZER SHALL BE 10-5-5 NPK HOMOGENIZED.

----RESEEDING----

AREAS REQUIRING RESEEDING DUE TO THE NON-ESTABLISHMENT OF SUFFICIENT VEGETATIVE COVER, SHALL BE RESEEDED IN ACCORDANCE WITH ITEMS 164 AND 168. THE COST FOR RESEEDING SHALL BE PAID FOR BY THE STATE PROVIDED THAT THE CONTRACTOR HAS FOLLOWED THE SEEDING AND WATERING REQUIREMENTS AS SPECIFIED IN ITEMS 164 AND 168.

----SEED MIXTURE----

SEED MIXTURE SHALL BE AS SPECIFIED UNDER ITEM 164. COOL SEASON OR WARM SEASON GRASSES SHALL BE INCLUDED AS PART OF ITEM 164 (SEE TABLE 4A OR 5 IN THE STANDARD SPECIFICATION MANUAL FOR DATES AND SEED TYPE).

---ITEM 166 FERTILIZER---

AREAS TO RECEIVE FERTILIZER ARE THE SAME AS SHOWN FOR ITEM 164.

GENERAL NOTES AND SPECIFICATION DATA--

---ITEM 168 VEGETATIVE WATERING---

WATER SHALL BE APPLIED UNIFORMLY OVER AREAS AFTER SEEDING OR SODDING AS DIRECTED BY THE ENGINEER IN ACCORDANCE WITH APPLICABLE PROVISIONS OF ITEM 168 "VEGETATIVE WATERING". IN ADDITION, THE CONTRACTOR SHALL BE RESPONSIBLE FOR A 70% GRASS COVERAGE IN ORDER TO COMPLY WITH STABILIZATION REQUIREMENTS. VEGETATIVE COVERAGE SHALL BE UNIFORM. DURING THIS PERIOD, WATER EQUIPMENT SHALL BE METERED AND OPERATED UNDER PUMPING PRESSURE CAPABLE OF DELIVERING THE REQUIRED QUANTITIES OF WATER NECESSARY. EACH CYCLE SHALL BE EXECUTED EVERY TWO (2) DAYS, OR AS DIRECTED BY THE ENGINEER. WATER SHALL BE APPLIED IN SUCH A MANNER AS TO ENSURE ADEQUATE MOISTURE AND BE MAINTAINED ON THE GRASS SEEDING AND NOT ERODE THE SOIL IN PLACE. DURING PERIODS OF ADEQUATE MOISTURE AS DETERMINED BY THE ENGINEER, MECHANICAL WATERING MAY NOT BE REQUIRED. IN ADDITION TO METERING THE WATER EQUIPMENT, THE CONTRACTOR SHALL UPON REQUEST OF THE ENGINEER, PROVIDE A LOG BOOK SHOWING DAILY WATER USAGE AND RECEIPTS OF WATER APPLIED.

UPON ESTABLISHMENT OF 70% VEGETATIVE COVERAGE AS DETERMINED BY THE ENGINEER, THE ENGINEER SHALL HAVE THE OPTION TO REQUIRE THE CONTRACTOR TO CONTINUE WATERING AS SPECIFIED FOR A PERIOD NOT TO EXCEED 30 DAYS.

THE BASIS OF THE ESTIMATE BELOW ESTABLISHES THE APPROXIMATE QUANTITY OF WATER REQUIRED TO COMPLETE ONE (1) FULL WATERING CYCLE:

* GRASS AREAS	GALLONS/ACRE	ACRE	TOTAL GALLONS (MINIMUM)
	2,100	174.15	365,715

---ITEM 170 IRRIGATION SYSTEM---

THIS PROJECT INCLUDES AN IRRIGATION SYSTEM WITH BATTERY OPERATED CONTROLLER AND VALVES. IT SHALL BE THE CONTRACTOR'S RESPONSIBILITY TO PROGRAM AND MAINTAIN THE SYSTEM SO THAT THE MINIMUM WATERING REQUIREMENTS STATED IN ITEM 192 ARE MET. IN THE EVENT THE IRRIGATION SYSTEM FAILS, THE CONTRACTOR SHALL MEET THE WATERING REQUIREMENTS BY A METHOD APPROVED BY THE ENGINEER. ANY WATER HAULED TO THE SITE DURING THE INSTALLATION OR NINETY (90)-DAY MAINTENANCE PERIOD SHALL BE PAID BY THE CONTRACTOR.

THE DRAWINGS ARE GENERALLY DIAGRAMMATIC AND INDICATIVE OF THE WORK TO BE INSTALLED. DUE TO THE SCALE OF THE DRAWINGS, IT IS NOT POSSIBLE TO INDICATE ALL OFFSETS, FITTINGS, AND SLEEVES WHICH MAY BE REQUIRED. THE

GENERAL NOTES AND SPECIFICATION DATA--

---ITEM 170 IRRIGATION SYSTEM---, CONT'D

CONTRACTOR SHALL CAREFULLY INVESTIGATE THE SITE CONDITIONS AFFECTING ALL WORK AND SHALL PLAN HIS WORK ACCORDINGLY, FURNISHING SUCH OFFSETS, FITTINGS, AND SLEEVES AS MAY BE REQUIRED TO MEET SITE CONDITIONS.

THE CONTRACTOR SHALL NOT WILLFULLY INSTALL THE IRRIGATION SYSTEM AS SHOWN ON THE DRAWINGS WHEN IT IS OBVIOUS IN THE FIELD THAT OBSTRUCTIONS, GRADE DIFFERENCES OR DISCREPANCIES IN AREA DIMENSIONS EXIST THAT MIGHT NOT HAVE BEEN KNOWN IN ENGINEERING. SUCH OBSTRUCTIONS OR DIFFERENCES SHOULD BE BROUGHT TO THE ATTENTION OF THE ENGINEER WHO WILL RECOMMEND NECESSARY CHANGES. THIS WORK SHALL BE CONSIDERED INCIDENTAL TO THE PROJECT. IN THE EVENT THIS NOTIFICATION IS NOT PERFORMED, THE CONTRACTOR SHALL ASSUME FULL RESPONSIBILITY FOR ANY REVISIONS NECESSARY.

THE CONTRACTOR SHALL FIELD VERIFY DIMENSIONS AND MINIMUM 50 PSI STATIC WATER PRESSURE AT EACH METER BEFORE TRENCHING, IF DESCREPANCIES EXIST, NOTIFY THE ENGINEER BEFORE PROCEEDING. IF THE CONTRACTOR FAILS TO VERIFY PRESSURES, HE ASSUMES FULL RESPONSIBILITY AND COSTS FOR ANY SYSTEM ALTERATIONS.

A COPY OF THE COMPLETE PROJECT AND ALL ADDITIONAL PROJECT INFORMATION SHALL BE WITH THE IRRIGATION CONTRACTOR AT ALL TIMES . THE CONTRACTOR MUST COORDINATE HIS INSTALLATION ACTIVITIES AND THE SITE NEEDS WITH THE GENERAL CONTRACTOR. ALL NESSARY BORING FOR ELECTRICAL WORK AND WATER SLEEVES SHALL BE SUBSIDIARY TO THE ITEM "IRRIGATION SYSTEM". SLEEVING MATERIAL TO BE INSTALLED BY THE GENERAL CONTRACTOR.

USE OF SLEEVES FOR ALL ROADWAY CROSSINGS SHALL BE REQUIRED.

ELECTRICAL WORK:

(B) LOW VOLTAGE SERVICE. ALL LOW VOLTAGE ELECTRICAL WORK SHALL BE ACCOMPLISHED BY THE IRRIGATION CONTRACTOR IN ACCORDANCE WITH THE REQUIREMENTS SET FORTH HEREIN.

(C) APPROVALS, PERMITS. THE CONTRACTOR SHALL BE RESPONSIBLE FOR OBTAINING ALL PERMITS AND LICENSES NECESSARY FOR THE INSTALLATION AND OPERATION OF THE IRRIGATION SYSTEM.

GENERAL NOTES AND SPECIFICATION DATA--

MATERIALS:

1. ABOVE GROUND PIPE:

ALL ABOVE GROUND PIPE, BURIED RISERS AND SWING-JOINT COMPONENTS SHALL BE SCHEDULE 40 PVC PIPE RATED FOR DIRECT SUNLIGHT EXPOSURE.

2. UNDERGROUND PIPE:

MAIN SUPPLY LINES TO ZONES SHALL BE SCHEDULE 40 ZONE PIPING SHALL BE DOMESTIC EXTRUDED PIPE MANUFACTURED FROM PVC 1120, TYPE I, GRADE I, PVC COMPOUND. THE PIPE SHALL BE SDR 13.5, 315, FOR ALL 1/2", PIPE AND SDR 21, CLASS 200 FOR ALL OTHER SIZES, PRESSURE RATED WITH TWIN GASKET COUPLINGS AND FITTINGS OR SLIP TYPE SOLVENT WELDED JOINTS. ALL FITTINGS INCORPORATED INTO THE SYSTEM SHALL BE OF THE SAME TYPE AND CLASS MATERIAL AS THE PIPE. ALL FITTINGS SHALL BE REGULARLY MANUFACTURED PARTS (REDUCERS, BUSHINGS, AND OTHER APPURTENANCES), INTENDED FOR USE WITH THE AFOREMENTIONED MATERIALS. ALL PIPE AND FITTINGS SHALL CONFORM TO ASTM D-1784 AND SHALL BE MARKED IN ACCORDANCE WITH ASTM D-2241.

3. REMOTE CONTROL VALVES:

ALL REMOTE CONTROL VALVES SHALL BE AS SPECIFIED IN THE PLANS.
THE CONTRACTOR SHALL FURNISH VALVE DATA TO THE ENGINEER FOR APPROVAL PRIOR TO BEGINNING THE WORK.

4. WATER METER:

WATER METER SHALL BE AS INDICATED ON THE PLANS THE CONTRACTOR SHALL FURNISH METER DATA TO THE ENGINEER FOR APPROVAL PRIOR TO BEGINNING THE WORK.

GENERAL NOTES AND SPECIFICATION DATA--

MATERIALS:, CONT'D

5. VALVE BOXES:

ALL GATE VALVES, REMOTE CONTROL VALVES, AND QUICK COUPLING VALVES SHALL BE MOUNTED BELOW GRADE IN AMETEK OR APPROVED EQUAL VALVE BOXES. MINIMUM SIZE OF ANY BOX SHALL BE TEN (10) INCHES AND SHALL BE INSTALLED WITH THE TOP FLUSH WITH FINISHED GRADE. NO MORE THAN ONE (1) VALVE IS TO OCCUPY THE SAME BOX TO ALLOW EASY ACCESS FOR MAINTENANCE OPERATIONS AS DETERMINED BY THE ENGINEER.

BACKFLOW PREVENTION DEVICE SHALL BE INSTALLED IN A AMETEC VALVE BOX (14" X 20" X 12")

6. BUBBLER HEADS:

BUBBLER HEADS SHALL BE INSTALLED AS SHOWN IN THE PLANS. THE CONTRACTOR SHALL FURNISH HEAD DATA TO THE ENGINEER FOR APPROVAL PRIOR TO BEGINNING THE WORK.

7. MISCELLANEOUS FITTINGS:

THE CONTRACTOR SHALL FURNISH ALL OTHER FITTINGS AND APPURTENANCES NECESSARY TO COMPLETE THE SYSTEM.

8. IRRIGATION CONTROLLER:

THE CONTROLLER SHALL BE AS SHOWN ON THE PLANS AND INSTALLED IN STRICT ACCORDANCE WITH THE MANUFACTURER'S SPECIFICATIONS. THE CONTRACTOR SHALL FURNISH CONTROLLER DATA TO THE ENGINEER FOR APPROVAL PRIOR TO BEGINNING THE WORK.

9. CONTROL WIRE:

ALL LOW VOLTAGE CONTROL WIRE SHALL

GENERAL NOTES AND SPECIFICATION DATA--

MATERIALS:, CONT'D
BE 14 GA. COLOR CODED AND SPECIFICALLY MANUFACTURED FOR DIRECT BURIAL. ALL WIRE CONNECTIONS AND SPLICES SHALL BE MADE WITH WATERPROOF COMPRESSION CLAMPS COVERED WITH SCOTCH FILL AND COATED WITH SCOTCH KOTE, OR AN APPROVED EQUAL.

10. BACKFLOW PREVENTION DEVICE:

ALL CONNECTIONS TO A POTABLE WATER SUPPLY SHALL BE PROTECTED BY A DOUBLE CHECK VALVE ASSEMBLY (DCA) IN THE SIZES SHOWN ON THE PLANS. THE TYPE OF BACKFLOW PREVENTION IN ALL CASES SHALL MEET THE REQUIREMENTS AND SPECIFICATIONS OF THE INDIVIDUAL WATER SUPPLY BEING ACCESSED FOR THE IRRIGATION SYSTEM. THE CONTRACTOR SHALL BE RESPONSIBLE FOR OBTAINING ALL PERMITS AND APPROVALS FOR THE BACKFLOW PREVENTION DEVICES. THE CONTRACTOR SHALL FURNISH CHECK VALVE DATA TO THE ENGINEER FOR APPROVAL PRIOR TO BEGINNING THE WORK.

EXAMPLE: FEBCO 805Y (3/4") OR AN APPROVED EQUAL

11. SOLVENT CEMENT:

SOLVENT CEMENT SHALL BE THE TYPE RECOMMENDED BY THE PIPE MANUFACTURER.

INSTALLATION METHOD:

1. EXCAVATION AND BACKFILLING. THE CONTRACTOR SHALL DO ALL NECESSARY EXCAVATING AND BACKFILLING REQUIRED FOR THE PROPER INSTALLATION OF THE PIPE AND OTHER IRRIGATION EQUIPMENT. EXCAVATION DEPTH AND PIPE LOCATION SHALL BE IN STRICT ACCORDANCE WITH THE DIMENSIONS AND NOTES ON THE PLANS. DEVIATIONS IN THE PIPING AS SHOWN ON THE PLANS SHALL NOT BE PERMITTED WITHOUT APPROVAL, IN WRITING, FROM ENGINEER. MINOR ADJUSTMENTS TO THE LAYOUT THAT MAY BE NECESSARY TO AVOID UNFORESEEN

GENERAL NOTES AND SPECIFICATION DATA--

INSTALLATION METHOD:, CONT'D
UNDERGROUND OBSTRUCTIONS MAY BE MADE BY THE CONTRACTOR SO LONG AS THEY ARE RECORDED ON THE FIELD DRAWINGS AND INCORPORATED INTO THE "AS-BUILT DRAWINGS" DESCRIBED HEREINAFTER.

(A) TRENCH EXCAVATION. TRENCH EXCAVATION SHALL FOLLOW, AS MUCH AS POSSIBLE, THE LAYOUT INDICATED ON THE DRAWINGS. DIG TRENCHES STRAIGHT AND SUPPORT PIPE CONTINUOUSLY ON BOTTOM OF TRENCH. LAY PIPE TO AN EVEN GRADE. TRENCH SHALL BE CLEAN AND SMOOTH WITH ALL ORGANIC DEBRIS AND SHARP OBJECTS REMOVED. TRENCH DEPTHS SHALL BE AS SHOWN ON THE PLANS.

PIPE SHALL BE SNAKED IN THE TRENCH, WITH SCHEDULING FACING UP FOR CLEAR INSPECTION BY THE ENGINEER AND IN ORDER TO ALLOW FOR EXPANSION AND CONTRACTION. SOLVENT WELD PIPE SHALL NOT BE INSTALLED WHEN AIR TEMPERATURE IS BELOW FORTY (40) DEGREES FAHRENHEIT. PLASTIC PIPE SHALL BE CUT WITH A HAND SAW, HACK SAW, OR OTHER CUTTER, IN A MANNER THAT WILL INSURE A SQUARE CUT. BURRS AT CUT ENDS SHALL BE REMOVED PRIOR TO INSTALLATION SO THAT A SMOOTH UNOBSTRUCTED FLOW WILL BE OBTAINED. PLASTIC TO PLASTIC JOINTS SHALL BE MADE FOLLOWING MANUFACTURER'S RECOMMENDATIONS.

ALL MAIN AND LATERAL LINES ARE TO BE PRESSURE TESTED AND INSPECTED BY THE ENGINEER PRIOR TO ANY BACKFILLING.

(B) DEPTH OF COVER. IRRIGATION MAINS SHALL HAVE A MINIMUM OF EIGHTEEN (18) INCHES OF COVER, AND LATERAL LINES SHALL HAVE A MINIMUM COVER OF TWELVE (12) INCHES OF SOIL.

(C) BACKFILL. ALL BACKFILL MATERIAL SHALL BE FREE OF SHARP ROCK, LARGE STONES, OR OTHER MATERIALS THAT COULD DAMAGE THE PIPE DURING THE BACKFILLING OPERATION.

BACKFILLING SHALL NOT BE DONE IN FREEZING WEATHER EXCEPT WITH WRITTEN APPROVAL OF THE ENGINEER. THE SITE OF THE WORK SHALL BE CONTINUOUSLY CLEARED OF EXCESS AND/OR WASTE MATERIALS AS THE BACKFILLING PROGRESSES, AND

GENERAL NOTES AND SPECIFICATION DATA--

INSTALLATION METHOD:, CONT'D
SHALL BE LEFT IN A WORKMANLIKE CONDITION TO THE SATISFACTION OF THE ENGINEER. IN ORDER TO PREVENT ACCIDENTAL INJURY, ANY OPEN TRENCHES SHALL BE COVERED OR CLEARLY FLAGGED TO THE ENGINEER'S SATISFACTION.

(D) COMPACTION OF BACKFILL. ALL TRENCHES SHALL BE BACKFILLED IN LIFTS OF NO MORE THAN TWELVE (12) INCHES AND THEN COMPACTED BY AN APPROVED METHOD. COMPACTION OF THE PIPE TRENCHES MUST BE SUFFICIENT TO LIMIT SHORT TERM SETTLING OF THE BACKFILL TO NO MORE THAN ONE-TENTH (0.10) OF A VERTICAL FOOT. THE CONTRACTOR SHALL BE RESPONSIBLE FOR CORRECTING ANY SETTLING GREATER THAN THIS WITHOUT ADDITIONAL COMPENSATION.

2. INSTALLATION OF VALVES. ALL VALVES, REMOTE, ELECTRIC, OR MANUAL, SHALL BE INSTALLED IN ACCORDANCE WITH THE DETAILS IN THE DRAWINGS AND IN AN APPROVED VALVE BOX WHICH SHALL REACH TO AT LEAST TWO (2) INCHES BELOW THE BOTTOM OF THE VALVE. A MINIMUM OF EIGHTEEN (18) INCHES OF EXTRA CONTROL WIRE SHALL BE COILED BELOW THE VALVE IN THE VALVE BOX.

3. INSTALLATION OF CONTROL WIRE. ALL LOW VOLTAGE CONTROL WIRE SHALL BE LAID IN THE PIPE TRENCHES BELOW THE PIPE. ANY WIRE THAT CANNOT BE INSTALLED DIRECTLY IN A PIPE TRENCH SHALL BE PLACED IN A MINIMUM TWO (2) INCH CONDUIT OVER ITS ENTIRE RUN. ALL WIRE RUNS SHALL BE CONTINUOUS LENGTHS. NO SPLICES SHALL BE MADE IN THE TRENCH. ANY WIRE SPLICES THAT ARE REQUIRED SHALL BE MADE AT THE VALUES USING WATERPROOF MATERIALS SPECIFIED HEREIN.

4. INSTALLATION OF CONTROLLERS. CONTROLLERS SHALL BE INSTALLED IN ACCORDANCE WITH THE DRAWINGS AND DETAILS. THE LOCATION OF THE CONTROLLERS SHALL BE AS SHOWN ON THE PLANS. ADJUSTMENT OF THE LOCATION MAY BE NECESSARY TO MEET UNFORESEEN SITE CONDITIONS. SHOULD RELOCATION BE NECESSARY THE CONTRACTOR SHALL CONTACT THE ENGINEER IMMEDIATELY

GENERAL NOTES AND SPECIFICATION DATA--

INSTALLATION METHOD:, CONT'D
AND THE ENGINEER WILL WORK WITH THE CONTRACTOR TO ESTABLISH THE FINAL LOCATION. SUCH A RELOCATION SHALL BE CONSIDERED AN INCIDENTAL CHANGE, AND THERE WILL BE NO ADDITIONAL COMPENSATION.

5. INSTALLATION OF WATER METERS AND BACKFLOW PREVENTERS. WATER METERS AND BACKFLOW PREVENTERS SHALL BE INSTALLED IN ACCORDANCE WITH THE DRAWINGS AND DETAILS. THE LOCATION OF WATER METERS AND BACKFLOW PREVENTERS SHALL BE AS SHOWN ON THE PLANS. ADJUSTMENT OF THE LOCATION MAY BE NECESSARY TO MEET UNFORESEEN SITE CONDITIONS. SHOULD RELOCATION BE NECESSARY THE CONTRACTOR SHALL CONTACT THE ENGINEER IMMEDIATELY AND THE ENGINEER WILL WORK WITH THE CONTRACTOR TO ESTABLISH THE FINAL LOCATION. SUCH A RELOCATION SHALL BE CONSIDERED AN INCIDENTAL CHANGE AND THERE WILL BE NO ADDITIONAL COMPENSATION.

PROJECT SUPERVISION:

PROJECT SUPERVISION. THE CONTRACTOR SHALL CONTINUOUSLY MAINTAIN A COMPETENT SUPERINTENDENT, LICENSED BY THE STATE OF TEXAS AS AN IRRIGATOR AND SATISFACTORY TO THE ENGINEER, ON THE SITE DURING ALL CONSTRUCTION OPERATIONS. THE SUPERINTENDENT SHALL BE ABLE TO MAKE DECISIONS AND DIRECT THE WORK AS THE REPRESENTATIVE OF THE CONTRACTOR. IT SHALL BE THE RESPONSIBILITY OF THE SUPERINTENDENT TO NOTIFY THE ENGINEER OF WORK ACCOMPLISHED AT LEAST FORTY-EIGHT (48) HOURS IN ADVANCE OF REQUIRED ONSITE INSPECTIONS AND TO MAINTAIN A SET OF PLANS ON THE SITE AT ALL TIMES ON WHICH ALL FIELD ADJUSTMENTS OR DEVIATIONS FROM THE DRAWINGS ARE TO BE RECORDED FOR THE PREPARATION OF THE AS-BUILT DRAWINGS. THE FIELD PLANS SHALL AT ALL TIMES BE AVAILABLE FOR THE INSPECTION OF THE ENGINEER.

GUARANTEE AND ACCEPTANCE:

1. MAINTENANCE PERIOD. THE IRRIGATION SYSTEM SHALL BE INSPECTED CONCURRENTLY WITH, AND SUBJECT TO

GENERAL NOTES AND SPECIFICATION DATA--

INSTALLATION METHOD:, CONT'D
THE SAME 90-DAY MAINTENANCE PERIOD REQUIRED BY ITEM 192. DURING THE 90-DAY MAINTENANCE PERIOD, THE CONTRACTOR SHALL PERFORM THE FOLLOWING MAINTENANCE ACTIVITIES AS A MINIMUM AND TO THE SATISFACTION OF THE ENGINEER:

(A) INSTALL AND MAINTAIN THE CONTROLLER PROGRAM TO INSURE THE PROPER DISTRIBUTION OF WATER.

(B) INSPECT, REPAIR, AND/OR REPLACE ANY EQUIPMENT THAT IS FOUND TO BE DEFECTIVE OR THAT MAY BE DAMAGED BY OTHER MAINTENANCE ACTIVITIES.

(C) MAKE ANY ADJUSTMENTS THAT MAY BECOME NECESSARY TO INSURE THE PROPER DELIVERY OF WATER TO THE PLANT MATERIAL.

---ITEM 180 WILDFLOWER SEEDING---

WILDFLOWER SEEDING IS INCLUDED IN THIS PROJECT. WILDFLOWER SEEDING SHALL BE AS SHOWN ON THE PLANS. SEEDING MAY BE INCORPORATED WITH ITEM 164 SEEDING FOR EROSION CONTROL.

WILDFLOWER SEEDING SHALL BE LIMITED TO THE MONTHS OF SEPTEMBER, OCTOBER AND NOVEMBER AT THE RATE OF THIRTY (30) POUNDS PER ACRE.

THE SEED MIX SHALL BE AS SPECIFIED BELOW:

COMMON NAME	SCIENTIFIC NAME	#/AC
BLUEBONNET	LUPINUS TEXENSIS	10.0
CLASPING CONEFLOWER	RUDBECKIA AMPLEXICAULIS	1.2
LANCE-LEAVED COREOPSIS	COREOPSIS LANCEOLATA	3.0
PLAINS COREOPSIS	COREOPSIS TINCTORIA	1.2
INDIAN BLANKET	GAILLARDIA PULCHELLA	4.2
PINK EVENING PRIMROSE	OENOTHERA SPECIOSA	1.2
MOSS VERBENA	VERBINA TENUISECTA	1.2
RED GILLA	IPOMOSIS RUBRA	1.2
ANNUAL PHLOX	PHLOX DRUMMONDII	1.2
LEMON MINT	MONARDA CITRIODORA	2.4
SCARLET SAGE	SALVIA COCCINEA	0.6
BLUE SAGE	SALVIA FARINCEA	0.6
RED MEXICAN HAT	RATIBIDIA COLUMNNARIS	2.0

GENERAL NOTES AND SPECIFICATION DATA--

---ITEM 192 ROADSIDE PLANTING AND ESTABLISHMENT---

THE LIVE OAK TREES SHALL BE PLANTED ACCORDING TO ITEM 192 AND AS SHOWN ON THE PLANS. THE TREES SHALL BE PLANTED IN THE FALL OR WINTER BETWEEN SEPTEMBER 1 AND FEBRUARY 1. THE TREE SPECIFICATIONS ARE DETAILED BELOW:

LIVE OAK, QUERCUS VIRGINIANA, SHALL BE CONTAINER GROWN. TREES SHALL BE TEN TO TWELVE FEET (10'-12') IN HEIGHT WITH A MINIMUM SPREAD OF SIX FEET (6'). TREES SHALL HAVE A SINGLE, STRAIGHT TRUNK WITH BRANCHING NO LOWER THAN FOUR FEET (4') AND A CALIPER OF THREE (3") INCHES.

MULCH MATERIAL FOR SOIL AMENDMENT

MULCH MATERIAL FOR SOIL AMENDMENT REQUIRED IN THE BACKFILL MIX SHALL BE 100% ORGANIC COMPOSTED MATERIAL, FACTORY BLENDED TO CONTAIN NON-DEFOLIATED (ARSENIC ACID FREE) WEED FREE, AND CONTAINING AN APPROXIMATE NON-LEACHABLE N-P-K ANALYSIS OF 2.0- 2.0-2.0 WITH TRACE ELEMENTS.

EXAMPLE: SWEET SOIL , SOIL AMENDMENT
MANUFACTURED BY:

ORGANIC COMPOST INC.
BOX 1637
EDINBURG, TEXAS 78504
(512) 383-1121
(OR APPROVED EQUAL)

MULCH MATERIAL FOR SURFACE APPLICATION

ALL MULCH FOR SURFACE APPLICATION SHALL BE SHREDDED PINE BARK. THE TEXTURE SHALL CORRESPOND TO THE TYPE I, CLASS B CLASSIFICATION OF THE FEDERAL SPECIFICATION Q-P-166E, WITH PARTICLES RANGING BETWEEN THE SIZE FROM 3/8 INCH TO ABOUT 1 INCH, WITH A MINIMUM (NOT OVER 25% BY VOLUME) OF FINER PARTICLES AND DUST. MULCH OF THIS TYPE AND CLASS SHALL BE FREE OF STICKS, STONES, CLAY, OR OTHER FOREIGN MATTER.

SAMPLES FOR APPROVAL OF MULCH (SOIL AMENDMENT AND SURFACE APPLICATION)

ONE CUBIC FOOT (1 CF) SAMPLES OF EACH TYPE OF INGREDIENT ALONG WITH A LABEL FROM THE MANUFACTURER'S PACKAGES SHALL BE SUBMITTED TO THE ENGINEER FOR APPROVAL. IF BULK MATERIALS ARE USED, TYPICAL SAMPLES OF EACH TYPE OF MATERIAL SHALL BE PROVIDED TO THE ENGINEER FOR APPROVAL PRIOR TO THE PREPARATION OF THE PLANTING

GENERAL NOTES AND SPECIFICATION DATA--

---ITEM 192 ROADSIDE PLANTING AND ESTABLISHMENT---, CONT'D
MIX. THESE SAMPLES, IF APPROVED BY THE ENGINEER, SHALL BE USED AS THE STANDARD BY WHICH OTHER MATERIALS SHALL BE JUDGED. ANY MATERIAL THAT, IN THE JUDGMENT OF THE ENGINEER, IS BELOW THE QUALITY OF THESE SAMPLES MAY BE TESTED IN ACCORDANCE WITH THE SPECIFICATIONS SET FORTH HEREIN. ANY REJECTED MATERIAL SHALL BE IMMEDIATELY REMOVED FROM THE SITE AT THE CONTRACTORS EXPENSE. PAYMENT FOR ANY TESTING REQUIRED UNDER THIS SECTION SHALL BE THE RESPONSIBILITY OF THE CONTRACTOR.

PLANTING SOIL MIX

BACKFILLING OF ALL PLANT PITS SHALL BE DONE WITH A PLANTING SOIL MIX AS SPECIFIED HEREIN. NATIVE SOIL REMOVED FROM THE PLANTING PITS SHALL BE MIXED WITH MULCH BY VOLUME AS DETAILED BELOW:

60% NATIVE SOIL REMOVED FROM PLANTING PIT EXCAVATION.
40% MULCH AS LISTED ABOVE.

THE ENGINEER MAY REQUIRE THE CONTRACTOR TO MIX ALL INGREDIENTS OF THE PLANTING SOIL MIX IN THE PRESENCE OF THE ENGINEER.

ALL INGREDIENTS SHALL BE THOROUGHLY BLENDED TO PROVIDE A HOMOGENEOUS MIXTURE. MIXING SHALL BE IN ONE CUBIC YARD OR GREATER BATCHES USING MECHANICAL MIXING EQUIPMENT APPROVED BY THE ENGINEER. MIXING MAY BE DONE IN A DESIGNATED ON-SITE AREA OR IT MAY BE ACCOMPLISHED OFF-SITE IF APPROVED BY THE ENGINEER AND THE FINISHED MATERIAL TRANSPORTED TO THE SITE.

SAMPLES OF AT LEAST ONE CUBIC FOOT (1 CF) FOR EACH TEN CUBIC YARDS (10 CY) OF PLANTING SOIL MIX USED ON THE SITE SHALL BE SUBMITTED TO THE ENGINEER FOR APPROVAL. IN THE EVENT DEFICIENCIES ARE FOUND IN THE PLANTING MIX THEY SHALL BE CORRECTED IMMEDIATELY. IF THE MATERIAL IS REJECTED ON THE PROJECT SITE BY THE ENGINEER FOR ANY REASON, ALL OF THE REJECTED MATERIAL SHALL BE IMMEDIATELY REMOVED FROM THE SITE AND DISPOSED OF BY THE CONTRACTOR AT HIS EXPENSE. IF ANY OF THE REJECTED MATERIAL HAS BEEN USED IN THE PLANTING OPERATIONS, THE ENGINEER, AT HIS DISCRETION, MAY REQUIRE THE CONTRACTOR TO REMOVE AND REPLACE THE SOIL MIX WITH AN APPROVED MIXTURE. ANY TESTING REQUIRED BY THE ENGINEER SHALL BE THE RESPONSIBILITY OF THE CONTRACTOR AND SHALL BE CONSIDERED SUBSIDIARY TO THE WORK AND NO ADDITIONAL COMPENSATION SHALL BE AWARDED.

FERTILIZER APPLICATION AT PLANTING

GENERAL NOTES AND SPECIFICATION DATA--

---ITEM 192 ROADSIDE PLANTING AND ESTABLISHMENT---, CONT'D
ALL PLANTS SHALL RECEIVE AN APPLICATION OF ROOT STIMULATOR BY CARL POOL PRODUCTS OR APPROVED EQUAL. THE CONTRACTOR SHALL SUBMIT MANUFACTURER'S LITERATURE AND DATA FOR APPROVAL OF THE ENGINEER A MINIMUM OF TWO WEEKS PRIOR TO WORK. THE SOLUTION SHALL BE APPLIED PER MANUFACTURER'S RECOMMENDATIONS. ALL TREES SHALL RECEIVE AN APPLICATION OF "AGRI-FORM" TEN GRAM, 20-10-5 ANALYSIS FERTILIZER TABLETS BY THE SCOTTS COMPANY AND DISTRIBUTED BY THE BWI COMPANY (214) 242-4755 OR APPROVED EQUAL. THE CONTRACTOR SHALL SUBMIT MANUFACTURER'S LITERATURE AND DATA FOR THE APPROVAL OF THE ENGINEER A MINIMUM OF TWO WEEKS PRIOR TO WORK. THE TABLETS SHALL BE PLACED PER MANUFACTURER'S RECOMMENDATIONS OR AS DIRECTED BY THE ENGINEER.

LIVE OAK TREES - ONE (1) TABLET PER 1/2 INCH CALIPER
PLACEMENT OF TABLETS ARE AS DESIGNATED ON THE PLANS.

WATER AND WATERING

WATERING IS BY IRRIGATION SYSTEM.

DURING THE PLANTING OPERATIONS, THE CONTRACTOR SHALL PROVIDE A QUANTITY AND FREQUENCY OF WATER APPLICATION TO KEEP THE GROUND AND BACKFILL MATERIAL MOIST TO A DEPTH OF AT LEAST TWELVE INCHES (12") BELOW THE ROOT BALL AND FOR THE DURATION OF THE CONTRACT. THE CONTRACTOR SHALL BE REQUIRED TO MEET THE MINIMUM WATERING REQUIREMENT STATED ABOVE BY A METHOD APPROVED BY THE ENGINEER OR, IF APPLICABLE, IN THE EVENT THE IRRIGATION SYSTEM FAILS.

PRUNING

ANY NECESSARY PRUNING SHALL BE DONE AT THE TIME OF PLANTING AS DIRECTED BY THE ENGINEER AND IN ACCORDANCE WITH APPROVED HORTICULTURAL METHODS. ALL PRUNING SHALL BE ACCOMPLISHED WITH CLEAN SHARP TOOLS SPECIFICALLY DESIGNED FOR THESE PURPOSES. PRUNING AND SELECTIVE THINNING EQUAL TO CLASS I "FINE PRUNING" SHALL BE ACCOMPLISHED AS NEEDED DURING THE CONTRACT PERIOD. THE REMOVAL OF SUCKER GROWTH SHALL BE REQUIRED TO KEEP THE PLANT MATERIAL FREE OF SUCKER GROWTH.

TREE BRACING AND WRAPPING

TREE BRACING WILL BE REQUIRED UNDER THIS CONTRACT, AS DETAILED ON THE PLANS.

GENERAL NOTES AND SPECIFICATION DATA--

---ITEM 192 ROADSIDE PLANTING AND ESTABLISHMENT---, CONT'D

---ITEM 193 LANDSCAPE MAINTENANCE---

LANDSCAPE MAINTENANCE SHALL BE PERFORMED ACCORDING TO ITEM 193 AND AS SPECIFIED BELOW:

ITEM 193 PLANT MAINTENANCE SHALL BEGIN WHEN THE TREES ARE PLANTED AND SHALL CONTINUE TO THE END OF THE CONTRACT.

PLANT MAINTENANCE SCHEDULE

FIRST MONTH AFTER PLANTING:
PERFORM MAINTENANCE AS DIRECTED IN ITEM 193, "LANDSCAPE MAINTENANCE" AT THE FREQUENCY OF ONE TIME PER WEEK.

SECOND MONTH AFTER PLANTING AND CONTINUING FOR THE DURATION OF THE CONTRACT:
PERFORM MAINTENANCE AS DIRECTED IN ITEM 193, "LANDSCAPE MAINTENANCE" AT THE FREQUENCY OF ONE TIME PER MONTH.

---ITEMS 260-262 LIME TREATMENT FOR MATERIALS USED AS SUBGRADE
---AND LIME TREATMENT FOR BASE COURSES---

THE CONTRACTOR'S ATTENTION IS CALLED TO THE FACT THAT CERTAIN EXISTING AND/OR PROPOSED STRUCTURES ARE WITHIN THE LIMITS OF THE LIME-TREATED SUBGRADE. UNLESS OTHERWISE DIRECTED BY THE ENGINEER, THESE STRUCTURES SHALL BE INSTALLED BEFORE THE FINAL ROLLING OF THIS SUBGRADE. IT SHALL BE THE CONTRACTOR'S RESPONSIBILITY TO PERFORM THE PROPER LIME TREATING OPERATION WITHOUT DAMAGE TO THESE STRUCTURES.

SOFT SPOTS IN THE SUBGRADE ARE TO RECEIVE LIME STABILIZATION AS DIRECTED BY THE ENGINEER. ADDING, MIXING, ETC., OF THE LIME FOR SOFT SPOTS WILL NOT BE PAID FOR DIRECTLY, BUT SHALL BE CONSIDERED SUBSIDIARY TO THE BID ITEM, "LIME TREATMENT FOR MATERIALS USED AS SUBGRADE".

THE SLURRY METHOD OF APPLYING LIME WILL BE REQUIRED, EXCEPT WHEN THE LIME IS TO BE ADDED TO NATURALLY WET MATERIALS AS DIRECTED BY THE ENGINEER.

FOR THIS PROJECT, THE ENGINEER WILL DIRECT A RANDOM NUMBER OF LIME TRUCKS TO BE CHECK WEIGHED.

GENERAL NOTES AND SPECIFICATION DATA--

---ITEMS 260-262 LIME TREATMENT FOR MATERIALS USED AS SUBGRADE, CONT'D

A LIME SPREADER BOX WILL NOT BE REQUIRED IF LIME CAN BE DISTRIBUTED WITHOUT IT, AT A UNIFORM RATE, TO THE SATISFACTION OF THE ENGINEER.

THE MINIMUM WIDTH OF COMPACTED SUBGRADE SHALL BE NO LESS THAN 10 FEET AT LOCATIONS WHERE PROPOSED ASPHALT ROADWAYS TAPER INTO OTHER EXISTING OR PROPOSED ROADWAYS.

---ITEM 300 ASPHALTS, OILS AND EMULSIONS---

ASPHALT BINDER USED FOR ALL ASPHALTIC CONCRETE MIXTURES SHALL MEET THE REQUIREMENTS OF A SUPERPAVE PERFORMANCE GRADE 70-22, UNLESS OTHERWISE NOTED IN THE PLANS.

---ITEM 360 CONCRETE PAVEMENT---

THE PLACEMENT OF CONCRETE PAVEMENT BETWEEN MAY 15TH AND OCTOBER 1ST SHALL BE DURING NIGHTTIME HOURS (COMMENCING AT 7 P.M. WITH ALL PAVING OPERATIONS BEING COMPLETED BY 8:00 A.M. OF THE FOLLOWING MORNING AND AS DIRECTED BY THE ENGINEER.

THE MATERIAL USED TO PRODUCE THE CONCRETE PAVING MIXTURE SHALL PRODUCE CONCRETE WITH A MAXIMUM COEFFICIENT OF THERMAL EXPANSION (COTE) OF 0.000005 IN/IN/DEGREE FARENHEIT, WHEN TREATED IN ACCORDANCE WITH TEST METHOD TEX 428-A.

FOR THIS PROJECT, TYPE II CEMENT SHALL BE USED. A POZZOLAN SHALL BE USED TO REPLACE THE MAXIMUM ALLOWABLE AMOUNT OF THE CEMENT. THE POZZOLAN SHALL BE CLASS "F" FLY ASH AT A MAXIMUM OF 35% REPLACEMENT RATE BY ABSOLUTE VOLUME OR USE GROUND GRANULATED BLAST-FURNACE SLAG (GGBF SLAG) GRADE 100 OR 120 AT A 50% REPLACEMENT RATE BY ABSOLUTE VOLUME. THE MAXIMUM CONCRETE TEMPERATURE AT TIME OF PLACEMENT SHALL BE 90 DEGREES FARENHEIT. AN EVAPORATION RETARDANT SHALL BE USED IMMEDIATELY FOLLOWING THE CARPET DRAG.

---ITEM 400 EXCAVATION AND BACKFILL FOR STRUCTURES---

CEMENT STABILIZED BACKFILL SHALL CONTAIN AGGREGATE, WATER AND A MINIMUM OF 3.0 SACKS OF PORTLAND CEMENT PER CUBIC YARD OF MATERIAL. CEMENT AND WATER SHALL CONFORM TO THE REQUIREMENTS OF ITEM 421, "PORTLAND CEMENT CONCRETE". AGGREGATE SHALL BE CLEAN SAND OR OTHER SUITABLE MATERIAL AND SHALL BE SUBJECT TO THE APPROVAL OF THE ENGINEER.

GENERAL NOTES AND SPECIFICATION DATA--

---ITEM 400 EXCAVATION AND BACKFILL FOR STRUCTURES---, CONT'D

IF THE CONTRACTOR ELECTS TO CUT PAVEMENT (EXISTING / DETOUR) FOR STRUCTURAL WORK BEYOND THAT REQUIRED BY THE CONSTRUCTION PHASING SHOWN IN THE PLANS AND APPROVED BY THE ENGINEER, IT SHALL BE RESTORED AT HIS EXPENSE AND BACKFILLED TO ITS ORIGINAL CONDITION OR BETTER IN ACCORDANCE WITH ITEM 400.

---ITEM 416 DRILLED SHAFT FOUNDATIONS---

THE CONTRACTOR SHALL PROBE BEFORE DRILLING FOUNDATIONS TO DETERMINE THE LOCATIONS OF ALL UNDERGROUND UTILITIES AND STRUCTURES.

---ITEM 420 CONCRETE STRUCTURES---

CONCRETE FOR BENTS SHALL BE PAID AS PLAN QUANTITY.

---ITEM 421 PORTLAND CEMENT CONCRETE ---

THE CONTRACTOR SHALL NOT BE ALLOWED THE SPLICING, CUT AND JOINTING, GLUING ETC. OF FORM LINER PANELS. EACH FORM LINER PANEL SHALL BE FABRICATED TO FORM A ONE PIECE UNIT TO THE SIZE AND SPECIFICATIONS SET FORTH ON THE PLAN SHEETS. FORM LINERS MADE OF MULTI-USE MATERIAL SHALL BE WASHED AND CLEANED AFTER EACH USAGE. FORM LINERS THAT HAVE IN THE OPINION OF THE ENGINEER BECOME DAMAGED OR WORN SHALL BE REPLACED BY THE CONTRACTOR. REPLACEMENT OF FORM LINERS SHALL BE CONSIDERED INCIDENTAL TO THE WORK AND SHALL NOT ENTITLE THE CONTRACTOR TO ADDITIONAL COMPENSATION.

THE CONTRACTOR SHALL POUR AND FINISH A 3' X 3' SAMPLE PANEL OF ALL FORM LINER FINISHES. THE PANELS SHALL MEET WITH THE REQUIREMENTS OF THE PLANS AND SPECIFICATIONS AND BE APPROVED BY THE ENGINEER BEFORE ANY FORM LINERS MAY BE ORDERED, OBTAINED OR USED. THE SAMPLE PANEL SHALL BE CONSIDERED TYPICAL FOR THE FINISH. ANY DEVIATION OF COLOR, GRADE, OR DEPTH FROM THE SAMPLE PANEL SHALL BE GROUNDS FOR REJECTION OF THE FORM LINER FINISH AND SHALL BE REMOVED AND REPLACED AS SPECIFIED BY THIS NOTE.

CONCRETE STAIN SHALL BE APPLIED TO EACH SAMPLE TO DEMONSTRATE THE ABILITY OF THE CONTRACTOR TO MAINTAIN SHARP DEFINITION (NO BLEEDING) BETWEEN ADJACENT COLORS.

GENERAL NOTES AND SPECIFICATION DATA--

---ITEM 421 PORTLAND CEMENT CONCRETE ---, CONT'D

ALL COLORS SHALL BE APPROVED BY THE ENGINEER. IF A COLOR IS NOT APPROVED, A NEW SAMPLE SHALL BE SUBMITTED AND A NEW COLOR APPLIED FOR APPROVAL BY THE ENGINEER.

THE SAMPLE PANEL OR ANY REQUIRED REPLACEMENT OF THE FORM LINER TREATMENT SHALL NOT BE PAID FOR DIRECTLY BUT SHALL BE CONSIDERED SUBSIDIARY TO THIS ITEM.

FORM LINERS, AS DIRECTED BY THE ENGINEER, SHALL BECOME THE PROPERTY OF THE STATE.

TYPE II CEMENT WILL BE REQUIRED ON ALL DRILL SHAFTS, PILING FOUNDATIONS AND ANY OTHER ELEMENT OF THE BRIDGE OR RETAINING WALLS PARTIALLY EMBEDDED IN THE NATURAL GROUND.

THE CONTRACTOR SHALL BE REQUIRED TO PROVIDE ONE INDIVIDUAL CERTIFIED TO BATCH CONCRETE. THIS INDIVIDUAL SHALL BE AVAILABLE TO THE ENGINEER FOR THE DURATION OF THE PROJECT.

TRANSVERSE CONSTRUCTION JOINTS FOR BOX CULVERTS AND/OR BOX SIPHONS WILL BE ALLOWED AT CHANGE OF GRADE AND/OR ALIGNMENTS. THESE JOINTS WILL BE REQUIRED AT INTERVALS NOT GREATER THAN 60 FEET, NOR LESS THAN 40 FEET, UNLESS OTHERWISE APPROVED BY THE ENGINEER.

CLASS "A" CONCRETE USED IN THE STRUCTURAL APPLICATION WITHIN THE LIMITS OF THE PAVED ROADWAY, WILL REQUIRE A MINIMUM OF ONE (1) SET OF BEAMS PER DAY OF PRODUCTION.

CLASS "C" CONCRETE WILL BE REQUIRED FOR ALL CAST-IN-PLACE CONCRETE CULVERTS, UNLESS OTHERWISE CALLED OUT IN THE PLANS.

THE CONTRACTOR SHALL BE RESPONSIBLE FOR ALL CONCRETE TEST BEAMS FOR FLEXURAL STRENGTH. TEST BEAMS SHALL BE DONE BY A TXDOT APPROVED LAB AND THE RESULTS SHALL BE MAINTAINED IN RECORD FORM AND FURNISHED DAILY TO THE PROJECT ENGINEER.

A "PRE-POUR" MEETING SHALL BE HELD BEFORE THE CONSTRUCTION OF THE FIRST BRIDGE DECK. THE MEETING SHALL BE ATTENDED BY BOTH THE CONTRACTOR AND SUB-CONTRACTOR RESPONSIBLE FOR THE WORK.

---ITEM 423 RETAINING WALLS---

ALL RETAINING WALLS SHALL HAVE AN UNDERDRAIN SYSTEM, WHICH SHALL BE INSTALLED AS SHOWN IN THE PLANS. THE UNDERDRAIN SYSTEM WILL NOT BE PAID

GENERAL NOTES AND SPECIFICATION DATA--

---ITEM 423 RETAINING WALLS---, CONT'D
FOR DIRECTLY, BUT WILL BE INCIDENTAL TO ITEM 423.

ALL RETAINING WALLS, EXCEPT G AND H, SHALL HAVE AN UNDERDRAIN SYSTEM WHICH SHALL BE INSTALLED AS SHOWN IN THE PLANS. THE UNDERDRAIN SYSTEM WILL NOT BE PAID FOR DIRECTLY, BUT WILL BE INCIDENTAL TO ITEM 423.

ALL RETAINING WALL PANELS SHALL BE PRECAST, EXCEPT WALLS G AND H WHICH SHALL BE CAST IN PLACE, UNLESS OTHERWISE DIRECTED BY THE ENGINEER. INDIVIDUAL PANELS SHALL NOT EXCEED 50 SQUARE FEET IN SIZE.

THE CONTRACTOR SHALL PROVIDE AND MAINTAIN POSITIVE DRAINAGE AWAY FROM THE EARTH WALL SYSTEM (INCLUDING THE LEVELING PAD) AT ALL TIMES FOR THE DURATION OF THE CONTRACT.

THE FOLLOWING MECHANICALLY STABILIZED EARTH (MSE) WALL SYSTEMS ARE APPROVED FOR THIS PRODUCT:

REINFORCED EARTH WALL
THE REINFORCED EARTH COMPANY
1331 AIRPORT FREEWAY, SUITE 302
EULESS, TEXAS 76040-4150
(817) 283-5503

REINFORCED SOIL EMBANKMENT WALLS
TEXAS WELDED WIRE, INC.
645 WEST HURST BOULEVARD
HURST, TEXAS 76053
(817) 282-4560

STRENGTHENED EARTH WALLS
HANSON CONCRETE PRODUCTS
3500 MAPLE AVE.
DALLAS, TEXAS 75219

STRENGTHENED SOIL WALLS
SHAW TECHNOLOGIES INC.
P.O. BOX 654
COLLEYVILLE, TEXAS 76034
(817) 427-0997

RETAINED EARTH WALLS
FOSTER GEOTECHNICAL
4200 SOUTH HULEN, SUITE 600
FORT WORTH, TEXAS 76109
(817) 738-1305

TRICON RETAINED SOIL WALLS
TRICON PRECAST, INC.
15055 HENRY ROAD
HOUSTON, TEXAS 77060
(713) 931-9832

TENSAR RETAINING WALL SYSTEM
TENSAR EARTH TECHNOLOGIES, INC.
5775-B GLENRIDGE DRIVE
ATLANTA, GEORGIA 30328
(404) 250-1290

ALL PANELS ARE TO HAVE CONNECTORS AND SOIL REINFORCEMENT PANELS WITH APPROPRIATE EMBEDMENT LENGTH.

GENERAL NOTES AND SPECIFICATION DATA--

---ITEM 423 RETAINING WALLS---, CONT'D
THE RETAINING WALL FINISH COLOR AND FINISH SHALL BE AS DETAILED IN THE LANDSCAPING PLANS.

---ITEM 425 PRESTRESSED CONCRETE STRUCTURAL MEMBERS---

WHERE ROAD CLOSURES OR DETOURS AROUND STRUCTURES ARE NECESSARY TO ACCOMPLISH PROPOSED WORK, THE REMOVAL OF EXISTING STRUCTURES AND/OR CUTTING OF EXISTING PAVEMENT WILL NOT BE PERMITTED UNTIL ALL PRECAST AND/OR PRESTRESSED MEMBERS FOR THE PROPOSED STRUCTURE HAVE BEEN CAST, TESTED AND APPROVED FOR USE.

---ITEM 432 RIPRAP---

ALL CONCRETE RIPRAP EXCEPT CONCRETE RIPRAP USED ON SAFETY END TREATMENTS SHALL BE 4 INCHES THICK. CONCRETE USED ON THIS RIPRAP SHALL BE CLASS "B" AND REINFORCING SHALL BE 6" X 6" W3 X W3 (NO.6 GAUGE) WELDED WIRE FABRIC OR #3 BARS AT 8 INCHES C.C. UNLESS OTHERWISE SHOWN ON THE PLANS.

PROPOSED RIPRAP FOR EMBANKMENT SLOPES UNDER BRIDGE ENDS SHALL BE CONSTRUCTED IN ACCORDANCE WITH STANDARD SHEET CRR. THE RIPRAP IN THESE AREAS SHALL BE PAID FOR UNDER SPECIAL SPECIFICATION ITEM 5559, "COLOR TEXTURIZED CONCRETE".

---ITEM 442 STRUCTURAL STEEL---

THE PLATE GIRDERS OF DIRECT CONNECTOR NO. 1 (GREATER THAN 7 FEET IN DEPTH) ARE NOT COVERED BY BRIDGE STANDARD SHEET "MEBR(S). THE CONTRACTOR, IN FULFILLMENT OF THE REQUIREMENTS OF SPECIFICATION ITEM 441, (ARTICLE 441.11 FIELD ERECTION) AND SPECIAL PROVISIONS, SHALL SUBMIT TO THE ENGINEER FOR APPROVAL PRIOR TO ERECTION, DETAILS OF ERECTION, BRACING AND SPLICE POINT SUPPORTS.

---ITEM 450 RAILING---

METAL BEAM GUARD FENCE TERMINAL CONNECTORS ARE REQUIRED.

FOR THIS ITEM, WHITE PORTLAND CEMENT WILL BE REQUIRED.

GENERAL NOTES AND SPECIFICATION DATA--

---ITEM 462 CONCRETE BOX CULVERTS AND SEWERS---

JOINTS IN PRECAST CONCRETE BOX CULVERTS SHALL BE MADE USING ANY OF THE METHODS SPECIFIED IN THE ITEM 464, EXCEPT MORTAR JOINTS OR RUBBER GASKET JOINTS.

THE CONCRETE BOX CULVERT SHALL BE PRECAST, EXCEPT AS NOTED ON PLANS, TO EXPEDITE HANDLING OF TRAFFIC.

CAST IN PLACE BOXES WILL BE CONSTRUCTED AS SHOWN ON STANDARD FOR SINGLE BARREL BOXES AND STANDARD DETAILS FOR MULTIPLE BOX CULVERTS.

AGGREGATE FOR CEMENT STABILIZED BACKFILL SHALL BE CLEAN SAND OR OTHER SUITABLE MATERIAL AND SHALL BE SUBJECT TO THE APPROVAL OF THE ENGINEER.

ON SINGLE AND/OR MULTIPLE BOX CULVERT CONSTRUCTION NEAR EXISTING TRAFFIC, THE CONTRACTOR SHALL WORK EXPEDITIOUSLY TO COMPLETE ALL WORK ON THE STRUCTURE INCLUDING PLACEMENT OF PIPE RUNNERS, REQUIRED SAFETY TREATMENT OR RAILING, BACKFILLING, ETC. THE PORTION OF ROADWAY WHICH IS NOT HANDLING TRAFFIC DUE TO THE CULVERT CONSTRUCTION WILL NOT BE OPENED TO TRAFFIC UNTIL ALL WORK AS DESCRIBED ABOVE AND SHOWN ON THE TCP HAS BEEN COMPLETED.

ALL CEMENT STABILIZED BACKFILL TO BE POURED SHALL BE PRE-MIXED AT THE CONCRETE PLANT.

---ITEM 464 REINFORCED CONCRETE PIPE---

TONGUE AND GROOVE PIPE WILL BE REQUIRED FOR INSTALLATIONS WHERE PART OF THE STRUCTURE MAY PROTRUDE INTO THE LIME TREATED SUBGRADE. THE 4 FEET DEPTH RESTRICTION FOR HEAVY EQUIPMENT PASSAGE OVER PIPE STRUCTURES IS VOIDED. THE CONTRACTOR WILL BE RESPONSIBLE FOR ANY CONSTRUCTION DAMAGE TO THESE FACILITIES.

AT LOCATIONS REQUIRING PIPE CULVERTS UNDER EXISTING ROADWAYS, THE CONTRACTOR WILL BE REQUIRED TO OPEN, INSTALL, AND BACKFILL EACH SECTION WITH CEMENT STABILIZED BACKFILL, OR PORTION THEREOF AS APPROVED BY THE ENGINEER, IN THE SAME DAY.

---ITEM 466 HEADWALLS AND WINGWALLS---

CONCRETE FOR ALL HEADWALLS AND WINGWALLS SHALL BE CLASS "C".

GENERAL NOTES AND SPECIFICATION DATA--

---ITEM 470 MANHOLES AND INLETS---

WHERE REQUIRED ON THE PLANS, MANHOLES AND INLETS ARE TO BE BUILT TO STAGE I CONSTRUCTION, COVERED WITH TEMPORARY PAVEMENT, AND COMPLETED IN A LATER PHASE OF CONSTRUCTION. THIS WORK SHALL BE CONSIDERED INCIDENTAL TO THE VARIOUS BID ITEMS.

WHERE MANHOLES AND INLETS ARE TO BE PLACED IN PAVED AREAS, THEY SHALL FIRST BE CONSTRUCTED TO AN ELEVATION SUCH THAT THEIR TEMPORARY WOODEN COVERS WILL BE FLUSH WITH THE SURFACE OF THE BASE MATERIAL.

WHERE MANHOLES AND/OR INLETS ARE TO BE BUILT COMPLETE IN GRADED AREAS, THEY SHALL FIRST BE CONSTRUCTED TO AN ELEVATION AT LEAST 4 INCHES ABOVE THE TOP OF THE HIGHEST ENTERING PIPE AND COVERED WITH A WOODED COVER. UPON COMPLETION OF THE GRADING WORK WHERE SUCH MANHOLES OR INLETS ARE CONSTRUCTED, THE CONTRACTOR SHALL COMPLETE THE CONSTRUCTION OF SUCH MANHOLES OR INLETS TO THE FINISHED ELEVATION. THE FINISHED ELEVATION SHOWN IN THE PLANS IS APPROXIMATE AND SHALL BE ADJUSTED BY THE CONTRACTOR, IF REQUIRED, SUBJECT TO APPROVAL OF THE ENGINEER.

---ITEM 471 FRAMES, GRATES, RINGS AND COVERS---

ALL GRATES WILL BE WELDED TO THE FRAMES IN A MANNER SATISFACTORY TO THE ENGINEER.

ALL MANHOLES LOCATED ON PAVED SURFACES WILL BE CONSTRUCTED WITH A COVER OF THE TYPE THAT WILL ENABLE IT TO BE BOLTED TO THE RING.

---ITEM 496 REMOVING OLD STRUCTURES---

UNLESS OTHERWISE AUTHORIZED BY THE ENGINEER, ALL OBSTRUCTIONS, OBJECTIONABLE MATERIAL AND OLD CONCRETE SHALL BE DISPOSED OF BY HAULING IT OFF THE PROJECT AND OUT OF SIGHT FROM STATE HIGHWAYS TO DISPOSAL SITES ARRANGED FOR BY THE CONTRACTOR AND SATISFACTORY TO THE ENGINEER.

PLUGGING OF EXISTING PIPE CULVERTS AS SPECIFIED HEREIN SHALL BE CONSIDERED SUBSIDIARY TO THIS BID ITEM.

---ITEM 502 BARRICADES, SIGNS AND TRAFFIC HANDLING---

THE CONTRACTOR SHALL COORDINATE THE SEQUENCE OF CONSTRUCTION AND TRAFFIC CONTROL PLAN WITH ANY ADJACENT CONSTRUCTION PROJECTS TO INSURE

GENERAL NOTES AND SPECIFICATION DATA--

---ITEM 502 BARRICADES, SIGNS AND TRAFFIC HANDLING---, CONT'D
THE UNINTERRUPTED FLOW OF TRAFFIC.

THE TRAFFIC CONTROL PLAN FOR THIS PROJECT SHALL BE AS SHOWN IN THE PLANS, AS DETAILED ON THE "BARRICADE AND CONSTRUCTION STANDARD" SHEETS AND AS PROVIDED FOR IN THE 1980 "TEXAS MANUAL ON UNIFORM TRAFFIC CONTROL DEVICES".

CONSTRUCTION SIGNS AND BARRICADES DESIGNATED TO BE LEFT IN PLACE UPON COMPLETION OF THIS PROJECT SHALL BE RESTORED TO A CONDITION ACCEPTABLE TO THE ENGINEER BEFORE RELEASING SAME TO THE STATE.

UNLESS OTHERWISE INDICATED IN THE PLANS, ALL BARRICADES, WARNING SIGNS, AND FLASHER LIGHTS WITHIN THE LIMITS OF THIS PROJECT EXISTING FROM PREVIOUSLY COMPLETED PROJECTS WILL BE MAINTAINED AND REMOVED BY THE CONTRACTOR AS DIRECTED BY THE ENGINEER.

TWO WEEKS PRIOR TO ANY LANE CLOSURES ALONG UNIROYAL STREET, MCPHERSON STREET, OR FM 3464, THE CONTRACTOR SHALL PLACE STATIC MESSAGE BOARDS OR SIGN PANELS AS SHOWN ON THE PLANS OR AS DIRECTED BY THE ENGINEER, TO INFORM THE PUBLIC OF SUCH CLOSURE.

TWO WEEKS PRIOR TO ANY ALTERATIONS ON TRAFFIC PATTERNS, THE CONTRACTOR WILL PROVIDE, FOR APPROVAL BY THE ENGINEER, A LAYOUT SHOWING ALL SIGNS, BARRICADES, STRIPING AND SIGNALIZATION.

THE CONTRACTOR SHALL NOTIFY THE PROPER CITY OR COUNTY TRAFFIC AND TRANSPORTATION DEPARTMENT OFFICIALS WHEN MAJOR TRAFFIC CHANGES ARE TO BE MADE. THE NOTIFICATION MUST BE MADE THREE DAYS PRIOR TO THE CHANGE.

PLASTIC DRUMS SHALL BE USED IN ACCORDANCE WITH THE PLANS AND MANUFACTURERS RECOMMENDATIONS, AS APPROVED BY THE ENGINEER.

FOR THIS PROJECT, WHERE THE DESIGNATION OF URBAN OR RURAL OCCURS IN THE BARRICADE AND CONSTRUCTION STANDARDS FOR CONSTRUCTION SIGNS TO REGULATE, WARN AND GUIDE TRAFFIC IN ADVANCE OF AND WITHIN THE PROJECT LIMITS, INCLUDING CROSS ROADS, THE URBAN MOUNTING HEIGHTS SHALL APPLY.

THE CONTRACTOR SHALL BE RESPONSIBLE FOR THE MAINTENANCE AND OPERATION OF THE EXISTING TRAFFIC SIGNALS WHEN CONSTRUCTION INVOLVING THE PROPOSED TRAFFIC SIGNAL WORK BEGINS AND SHALL BE RESPONSIBLE FOR THE MAINTENANCE AND OPERATION OF THE TRAFFIC SIGNALS UNTIL THE TRAFFIC SIGNAL WORK IS ACCEPTED BY THE STATE. DURING THE CONSTRUCTION OF THE PROPOSED TRAFFIC SIGNAL WORK, THE CONTRACTOR SHALL MAINTAIN THE

GENERAL NOTES AND SPECIFICATION DATA--

---ITEM 502 BARRICADES, SIGNS AND TRAFFIC HANDLING---, CONT'D
EXISTING TRAFFIC SIGNALS AND/OR TEMPORARY CONSTRUCTION TRAFFIC SIGNALS IN CONFORMANCE WITH THE TEXAS MANUAL ON UNIFORM TRAFFIC CONTROL DEVICES. THIS WORK WILL BE CONSIDERED AS INCIDENTAL TO ITEM 502.

DURING CONSTRUCTION OF THE PROPOSED SIGNAL WORK, IF ANY EXISTING TRAFFIC SIGNAL EQUIPMENT REQUIRES REPLACEMENT DUE TO WEAR, DETERIORATION, OR ANY CIRCUMSTANCE OVER WHICH THE CONTRACTOR HAS NO CONTROL, THE EQUIPMENT WILL BE FURNISHED BY THE DEPARTMENT AT NO COST TO THE CONTRACTOR AND SHALL BE INSTALLED BY THE CONTRACTOR. NO EXTRA COMPENSATION WILL BE ALLOWED TO THE CONTRACTOR FOR THIS WORK.

FOR THIS PROJECT THE CONTRACTOR WILL FURNISH AND MAINTAIN ALL BARRICADES AND WARNING SIGNS, INCLUDING ALL TEMPORARY AND PORTABLE TRAFFIC CONTROL DEVICES NECESSARY DURING THE VARIOUS PHASES OF CONSTRUCTION. THESE BARRICADES AND WARNING SIGNS SHALL BE CONSTRUCTED AND PLACED IN ACCORDANCE WITH THE BARRICADES AND CONSTRUCTION STANDARDS, 1980 TEXAS MUTCD, AND TYPICAL CONSTRUCTION LAYOUTS, OR AS DIRECTED BY THE ENGINEER.

THE CONTRACTOR'S ATTENTION IS CALLED TO THE FACT THAT THERE MAY BE OTHER CONTRACTORS OPERATING WITHIN AND ADJACENT TO THE LIMITS OF THIS PROJECT. IT WILL BE THE RESPONSIBILITY OF THE CONTRACTOR ON THIS PROJECT TO BECOME FAMILIAR WITH THE PLANS FOR ALL ADJACENT CONTRACTS AND COORDINATE HIS OR HER WORK TO MINIMIZE INTERRUPTIONS OR DELAYS TO THEIR OPERATIONS.

EXISTING SIGNS THAT ARE NOT BEING USED DURING CONSTRUCTION SHALL BE COVERED OR REMOVED.

CONTRACTOR SHALL ENSURE THAT A POLICE OFFICER IS AVAILABLE TO DIRECT THE TRAFFIC DURING THE TRANSFER OF TRAFFIC SIGNALS AND AS DIRECTED BY THE ENGINEER. THE COST FOR POLICE OFFICERS WILL BE PAID FOR AS PER SPECIAL PROVISION 009---021.

REFER FOR BC(2)-98 FOR ALL ROAD CLOSURE SIGNING.

CONTROL PLANS (TCP) FOR THIS PROJECT SHALL BE AS DETAILED ON STANDARD PLAN SHEET WZ(BTS-1)-98, AND WZ(BTS-2)98 AND AS PROVIDED FOR IN THE 1980 TEXAS MANUAL ON UNIFORM TRAFFIC CONTROL DEVICES.

THE USE OF ADVANCE WARNING FLASHING ARROW PANELS IS REQUIRED FOR THE CLOSING OF TRAFFIC LANES. THE CONTRACTOR SHALL BE REQUIRED TO FURNISH AT LEAST TWO STAND-BY UNITS, IN GOOD WORKING CONDITION AT JOB SITE, READY FOR IMMEDIATE USE.

GENERAL NOTES AND SPECIFICATION DATA--

---ITEM 502 BARRICADES, SIGNS AND TRAFFIC HANDLING---, CONT'D
REFLECTIVE SURFACES ON CHANNELIZING DEVICES, SUCH AS CONES, VERTICAL PANELS, DRUMS AND BARRICADES SHALL BE THE HIGH SPECIFIC INTENSITY TYPE, FLAT SURFACE, REFLECTIVE SHEETING AND SHALL CONFORM WITH DEPARTMENTAL SPECIFICATION, "FLAT SURFACE REFLECTIVE SHEETING," D-9-8300, TYPE C.

FLAG PERSONS MAY BE REQUIRED DURING CERTAIN PHASES OF CONSTRUCTION AND SHALL BE EQUIPPED WITH THE PROPER REFLECTIVE CLOTHING AND TWO-WAY RADIOS, AS DIRECTED BY THE ENGINEER.

THE CONTRACTOR MAY BE REQUIRED TO USE ORANGE PEDESTRIAN SAFETY BARRIERS TO PROTECT EXCAVATED AREAS AS DIRECTED BY THE ENGINEER. THIS WILL NOT BE PAID FOR DIRECTLY, BUT WILL BE INCIDENTAL TO OTHER PAY ITEMS.

---ITEM 504 FACILITIES FOR FIELD OFFICE AND LABORATORY---

THE CONTRACTOR SHALL FURNISH ONE AIR-CONDITIONED FIELD OFFICE (TY E) AT A LOCATION APPROVED BY THE ENGINEER. THIS BUILDING SHALL NOT BE LESS THAN 8 FEET BY 16 FEET AND 8 FEET HIGH OR AN APPROVED EQUIVALENT AND SHALL NOT HAVE LESS THAN FOUR GLASS WINDOWS AND ONE DOOR. A WORKBENCH AND A TABLE, EACH 3 FEET WIDE AND 6 FEET LONG, SHALL BE PROVIDED. THE CONTRACTOR SHALL PROVIDE A TELEPHONE, COPY MACHINE, PERSONAL COMPUTER AND PRINTER, AND SOFTWARE FOR THE HOT-MIX PROGRAM FOR QA/QC AS APPROVED BY THE ENGINEER. THE FIELD OFFICE SHALL BE EQUIPPED WITH INDOOR PLUMBING FACILITIES.

THE CONTRACTOR SHALL FURNISH 120-240 VOLT SINGLE PHASE ELECTRICITY TO THE FIELD OFFICE. THE CONTRACATOR WILL PAY FOR THE ELECTRICAL AND TELEPHONE INSTALLATIONS AND THE MONTHLY SERVICE CHARGES.

THE CONTRACTOR SHALL FURNISH A TYPE D STRUCTURE (ASPHALT MIX LABORATORY) FOR THE ENGINEER, MEETING THE REQUIREMENTS OF ITEM 504. THE CONTRACTOR IS RESPONSIBLE FOR LOCATING THIS LABORATORY AT THE PLANT SITE. THE LABORATORY SHOULD BE AVAILABLE TO THE ENGINEER PRIOR TO THE PAVING OPERATIONS. BUILDING AND ITS CONTENTS WILL BE SUBJECT TO THE APPROVAL OF THE ENGINEER. THE BUILDING WILL NOT BE NOT LESS THAN 12 FEET IN WIDTH, 33 FEET IN LENGTH AND 8 FEET IN HEIGHT. THE BUILDING WILL BE PARTITIONED INTO A MINIMUM OF TWO ROOMS. ALL DOORS WILL HAVE A MINIMUM WIDTH OF 3 FEET AND A MINIMUM HEIGHT OF 6 FEET 8 INCHES. ALL EXTERIOR OPENINGS WILL BE SECURED WITH BURGLAR BARS. ADEQUATE PARKING WILL BE PROVIDED FOR AT LEAST TWO FULL SIZE VEHICLES.

STORAGE ROOM

GENERAL NOTES AND SPECIFICATION DATA--

---ITEM 504 FACILITIES FOR FIELD OFFICE AND LABORATORY---, CONT'D
ONE ROOM WILL BE USED FOR SAMPLE STORAGE AND WILL BE 9 FEET BY 12 FEET IT WILL HAVE COUNTERS 2 FEET IN WIDTH AND 30 INCHES HIGH PLACED ALONG THE WALLS. THE STORAGE ROOM WILL HAVE A MINIMUM TOTAL COUNTER LENGTH OF 12 FEET. THE ROOM WILL BE EQUIPPED WITH ONE WALL LIGHT SWITCH, ONE CEILING LIGHT AND ONE 20 AMP, 110 VOLT OUTLET.

LABORATORY ROOM

THE OTHER ROOM OF THIS BUILDING WILL BE USED AS A LABORATORY AND WILL INCLUDE ACCESS TO A BATHROOM FACILITY FROM THE INTERIOR. THE LABORATORY AND BATHROOM FACILITY WILL HAVE WALLS, CEILING AND FLOOR INSULATED SUCH THAT THE AIR TEMPERATURE CAN BE MAINTAINED AT 76 DEGREES FAHRENHEIT AT ALL TIMES. THE CONTRACTOR IS RESPONSIBLE FOR MAINTAINING ALL MECHANICAL, ELECTRICAL AND PLUMBING FACILITIES AT ALL TIMES.

THE LABORATORY WILL BE EQUIPPED WITH AN EXHAUST FAN OF SUFFICIENT CAPACITY TO EVACUATE THE FUMES GENERATED BY THE ASPHALT SOLVENT. THE FAN WILL BE CAPABLE OF REDUCING THE FUME CONCENTRATIONS TO LEVELS BELOW OSHA MAXIMUMS AND IN ACCORDANCE WITH TEST METHOD TEX-210-F. THE FAN MOTOR WILL BE EXPLOSION PROOF. THE FAN WILL BE LOCATED BENEATH THE WORK BENCH IN THE EXTRACTION AREA AND SHALL BE EXHAUSTED TO THE OUTSIDE.

THE TOP OF THE WORKBENCH SHALL NOT BE LESS THAN 3 FEET BY 4 FEET AND WILL BE CONSTRUCTED OF EXPANDED METAL REINFORCED TO SUPPORT REQUIRED TESTING EQUIPMENT. ALL SIDES OF THE WORKBENCH SHALL BE ENCLOSED SO THAT ALL EXHAUST AIRFLOW IS THROUGH THE EXPANDED METAL TOP. THE FRONT OF THE WORKBENCH WILL HAVE A DOOR WHICH, WHEN OPENED IN CONJUNCTION WITH PLACING A COVER OVER THE EXPANDED METAL TOP, WILL CAUSE THE EXHAUST TO BE PULLED THROUGH THE DOOR OPENING. SUFFICIENT AREA WILL BE ALLOWED DIRECTLY IN FRONT OF THIS DOOR FOR THE PLACEMENT AND OPERATION OF AN EXTRACTOR. A FRESH AIR INTAKE SHALL BE LOCATED SO THAT SOLVENT VAPORS ARE DRAWN AWAY FROM THE WORKERS AND PREVENT REMOVAL OF AIR FROM THE TEMPERATURE CONTROLLED SPACE. ALL SAFETY CONSIDERATIONS REGARDING THE LABORATORY STRUCTURE WHICH ARE REQUIRED FOR EXTRACTION TESTING IN TEST METHOD TEX-210-F WILL BE PROVIDED.

THE LABORATORY WILL BE FURNISHED WITH WORK COUNTERS MEASURING 3 FEET IN WIDTH AND 3 FEET IN HEIGHT ALONG THE WALLS. THE LABORATORY WILL HAVE A MINIMUM TOTAL WORK COUNTER LENGTH OF 20 FEET. A DESK MEASURING 3 FEET BY 6 FEET WILL BE FURNISHED. THREE CHAIRS, ONE FILING CABINET, A TELEPHONE AND ONE BUILT IN EQUIPMENT STORAGE CABINET WILL BE PROVIDED. THE EQUIPMENT STORAGE CABINET SHALL BE A MINIMUM OF 3 FEET IN LENGTH BY 3 FEET IN WIDTH BY 3 FEET IN HEIGHT AND SHALL HAVE PROVISIONS FOR LOCKING SECURELY.

GENERAL NOTES AND SPECIFICATION DATA--

---ITEM 504 FACILITIES FOR FIELD OFFICE AND LABORATORY---, CONT'D

THE CONTRACTOR WILL PROVIDE AND PAY FOR THE ELECTRICAL, OTHER UTILITIES, TELEPHONE INSTALLATIONS AND THE MONTHLY SERVICE CHARGES. THE TELEPHONE LINE PROVIDED WILL BE SEPARATE FROM OTHER LINES.

THE LABORATORY PORTION WILL HAVE A MINIMUM OF TWO WINDOWS. A LABORATORY SINK MEASURING 24 INCHES BY 30 INCHES AND 12 INCHES DEEP WILL BE PROVIDED WITH AN ADEQUATE CLEAN POTABLE WATER SUPPLY FOR TESTING. THE LABORATORY WILL BE EQUIPPED WITH A MINIMUM OF TEN 20-AMP, 110 VOLT DUAL OUTLETS AND THREE 30 AMP, 220 VOLT OUTLETS. AL LELECTRICAL WORK WILL COMPLY WITH THE NATIONAL ELECTRICAL CODE (NEC). ALL OUTLETS WILL BE COMPATIBLE WITH THE ELECTRICAL REQUIREMENTS OF THE EQUIPMENT TO BE USED FOR TESTING. TWO LIGHT SWITCHES WILL BE LOCATED ON THE WALL AND FLUORESCENT CEILING LIGHTS CAPABLE OF MEETING ANSI STANDARDS FOR INDUSTRIAL LIGHTING. SPACE HEATERS FOR HEATING THE STRUCTURE ARE UNACCEPTABLE. PORTABLE STRUCTURES SHALL BE SUPPORT BLOCKED FOR STABILITY AND SHALL BE TIED DOWN.

---ITEM 512 PORTABLE CONCRETE TRAFFIC BARRIER---

A PORTION OF THE CONCRETE TRAFFIC BARRIERS (CTB'S) TO BE USED ON THIS PROJECT WILL BE PROVIDED BY TXDOT. THE CONTRACTOR IS RESPONSIBLE FOR TRANSPORTING THE CTB'S FROM THE TXDOT STOCKPILE LOCATED ON IH-35 AT MILEPOST 7. UPON COMPLETION OF THE PROJECT, ALL CTB'S SHALL BE RETURNED TO THE STOCKPILE AT MILEPOST 7 OR TO THE LAREDO DISTRICT YARD, AS DIRECTED BY THE ENGINEER. THE CONTRACTOR SHALL BE RESPONSIBLE FOR MAINTAINING THE CTB IN GOOD WORKING CONDITION THROUGHOUT CONSTRUCTION.

ALL CONNECTING HARDWARE FOR CONCRETE TRAFFIC BARRIERS TO BE USED ON THIS PROJECT SHALL BE PROVIDED BY THE CONTRACTOR. THIS HARDWARE WILL NOT BE PAID FOR DIRECTLY, BUT SHALL BE CONSIDERED INCIDENTAL TO ITEM 512.

---ITEM 514 PERMANENT CONCRETE TRAFFIC BARRIER---

JOINTS SHALL BE SPACED AT A MAXIMUM OF 30 FEET FOR ALL SINGLE SLOPE CONCRETE BARRIERS.

FOR THIS ITEM, WHITE PORTLAND CEMENT WILL BE REQUIRED.

GENERAL NOTES AND SPECIFICATION DATA--

---ITEM 529 CONCRETE CURB, GUTTER AND COMBINED CURB AND GUTTER---

IN THE EVENT THAT AN EXTRUSION MACHINE IS NOT USED, APPLICATION OF MORTAR PASTE TO ACCURATELY SHAPE THE FACE OF THE CONCRETE CURB OR CURB AND GUTTER SHALL NORMALLY BE PLACED WITHIN 15 MINUTES AND NOT LATER THAN 25 MINUTES AFTER THE CONCRETE IS PLACED IN THE FORMS.

BEFORE FINAL ACCEPTANCE OF THE PROJECT, DISCOLORATION CAUSED BY TIRE MARKS, MUD, ASPHALT, PAINT OR OTHER SIMILAR MATERIAL SHALL BE REMOVED BY ANY METHOD SATISFACTORY TO THE ENGINEER TO ACHIEVE A UNIFORM COLOR AND TEXTURE OF THE FINISHED SURFACE EXPOSED TO VIEW.

---531 SIDEWALKS---

CONCRETE SIDEWALKS SHALL BE 4 INCHES IN DEPTH. SIDEWALK CONCRETE REINFORCEMENT SHALL BE 6" X 6" - W2.9 X W2.9 (NO. 6 GAUGE) WELDED WIRE FABRIC OR #3 BARS AT 18 INCHES C.C. UNLESS OTHERWISE SHOWN ON THE PLANS.

---ITEM 540 METAL BEAM GUARD FENCE---

THE OPTIONAL TERMINAL ANCHOR POST WITH THE TERMINAL CONNECTOR WILL BE REQUIRED AS SHOWN ON THE METAL BEAM GUARD FENCE STANDARD. SPACERS AND ALL STEEL FITTINGS SHALL BE GALVANIZED.

---ITEM 556 PIPE UNDERDRAINS---

UNDERDRAIN PIPE SHALL BE LAID ON A SLOPE INSURING PROPER DRAINAGE AND AS SHOWN IN THE PLANS.

UNDERDRAIN PIPE SHALL TIE IN TO THE NEAREST INLET OR MANHOLE AS SHOWN IN THE PLANS OR AS DIRECTED BY THE ENGINEER.

---ITEM 618 CONDUIT---

CONDUIT SHALL BE PLACED IN AN AREA NOT EXCEEDING 2 FEET IN ANY DIRECTION FROM A STRAIGHT LINE AND THE DEPTH OF THE CONDUIT SHALL BE 2 FEET EXCEPT WHEN CROSSING A ROADWAY WHERE THE DEPTH SHALL NOT BE MORE THAN 3 FEET NOR LESS THAN ONE (1) FOOT BELOW THE BOTTOM OF THE BASE MATERIAL IN THE ROADWAY WHEN PLACED BY THE JACKING OR BORING METHOD. ANY EVIDENCE OF DAMAGE TO THE ROADWAY DURING THE JACKING OR BORING

GENERAL NOTES AND SPECIFICATION DATA--

---ITEM 618 CONDUIT---, CONT'D
OPERATION SHALL BE SUFFICIENT GROUNDS TO STOP METHOD BEING USED.

ALL CONDUITS WILL BE REPLACED AS APPROVED BY ENGINEER IN THE FIELD.

ALL COUPLINGS, EXTENSIONS, AND CONNECTIONS SHALL BE TIGHT AND WATERPROOF. ALL PROPOSED AND EXISTING CONDUIT SHALL BE BROUGHT INTO A GROUND BOX USING 45 DEGREE ELBOWS WITH BELLS UNLESS OTHERWISE SHOWN. IN THE EVENT ANY CONDUIT SHOWN ON THESE PLANS OR EXISTING PROVES TO BE UNUSABLE DUE TO LOCATION OR DAMAGE, IT WILL BE THE RESPONSIBILITY OF THE CONTRACTOR TO REPLACE SUCH SECTION OF CONDUIT WITH THE SIZE AND TYPE INDICATED ON THESE PLANS, AT THE CONTRACTOR'S EXPENSE.

THE OPEN TRENCH METHOD FOR PLACING CONDUIT UNDER PAVEMENT WILL NOT BE ALLOWED UNLESS PRIOR APPROVAL IS OBTAINED FROM THE ENGINEER.

AT EACH POINT WHERE THE CONDUIT PASSES BENEATH THE CURB, THE CONTRACTOR SHALL PLACE A ONE (1) INCH GALVANIZED CARRIAGE BOLT IN THE CURB AS A MEANS OF MARKING THE LOCATION OF THE CONDUIT. PAYMENT FOR FURNISHING AND PLACING BOLTS TO BE INCLUDED IN THE UNIT BID PRICE FOR CONDUIT.

ALL EXPOSED CONDUIT SHALL BE RIGID METAL CONDUIT (RMC).

ACTUAL CONDUIT LENGTHS, LOCATIONS AND CONFIGURATIONS SHALL BE VERIFIED AT EACH INTERSECTION AND SHALL BE AS DIRECTED AND/OR APPROVED BY THE ENGINEER.

IF CASING IS REQUIRED IN ORDER TO PLACE BORED CONDUIT, CASING SHALL BE INCIDENTAL TO CONDUIT.

WHEN CONDUIT IS TO BE INSTALLED WHERE A RIPRAP SURFACE OR AN ASPHALTIC CONCRETE SURFACE PRESENTLY EXISTS, CARE SHALL BE TAKEN IN BREAKING OUT THE EXISTING SURFACE FOR PLACEMENT OF THE CONDUIT. NO AREA GREATER THAN WHAT IS REQUIRED FOR PLACEMENT OF THE CONDUIT SHALL BE BROKEN OUT. THE BROKEN OUT SURFACE SHALL BE REPLACED WITH CLASS "A" OR CLASS "C" CONCRETE OR COLD MIX ASPHALTIC CONCRETE TO THE EXACT SLOPE, PATTERN AND THICKNESS OF THE EXISTING RIPRAP OR ASPHALT. PAYMENT FOR BREAKING OUT THE EXISTING SURFACE, WRAPPING THE FOUNDATION AND REPLACING THE SURFACE SHALL BE CONSIDERED INCIDENTAL TO THE VARIOUS BID ITEMS AND WILL NOT BE PAID FOR DIRECTLY.

PULLING CONDUCTORS IN PVC CONDUIT SHALL BE ACCOMPLISHED WITH NONMETALLIC PULL ROPE.

WHEN BACKFILLING BORE PITS, THE CONTRACTOR SHALL ENSURE THAT THE CONDUIT DOES NOT BECOME DAMAGED DURING INSTALLATION OR DUE TO ANY

GENERAL NOTES AND SPECIFICATION DATA--

---ITEM 618 CONDUIT---, CONT'D
SETTLING OF THE BACKFILL MATERIAL. THE CONTRACTOR SHALL COMPACT SELECT BACKFILL IN THREE EQUAL LIFTS TO THE BOTTOM OF THE CONDUIT; OR IF SAND IS USED, IT MUST BE PLACED TO A POINT 2 INCHES ABOVE THE CONDUIT. BACKFILL DENSITY SHALL BE EQUAL TO THE EXISTING SOIL. DUE CARE SHOULD BE EXERCISED TO PREVENT ANY MATERIAL FROM ENTERING THE CONDUIT.

THE CONTRACTOR MAY, AT HIS/HER OPTION, SUBSTITUTE HDPE CONDUIT MEETING THE SPECIFICATIONS OF ITEM 622 FOR ALL BORES REQUIRING PVC SCHEDULE 40 CONDUIT AND, WHEN APPROVED BY THE ENGINEER, MAY SUBSTITUTE HDPE FOR SCHEDULE 80 BORED CONDUIT. HDPE SHALL BE THE SAME SIZE AS THE PVC CONDUIT SHOWN ON THE PLANS. HDPE SHALL BE TERMINATED WITH UL LISTED FITTINGS. HDPE MAY BE THREADED AND USED WITH THREADED PVC CONNECTORS OR COUPLINGS. HDPE SHALL BE EXTENDED THROUGH THE BORE IN ONE CONTINUOUS PIECE AND SHALL BE COUPLED TO RMC ELBOWS OR TO PVC CONDUIT AT THE BORE PITS PRIOR TO ENTERING GROUND BOXES (IF GROUND BOXES ARE REQUIRED BY THE PLANS). HDPE SHALL NOT CONTAIN CONDUCTORS DURING INSTALLATION IN THIS MANNER. NO ADDITIONAL COMPENSATION WILL BE PAID TO THE CONTRACTOR WHEN HDPE IS SUBSTITUTED FOR THIS PURPOSE.

PVC CONDUIT SYSTEMS THAT SNAP OR LOCK TOGETHER WITHOUT GLUE THAT ARE DESIGNED AND UL LISTED TO BE USED FOR BORED PVC ELECTRICAL CONDUIT APPLICATIONS WILL BE ALLOWED FOR BORED PVC SCHEDULED 40, AND, WHEN APPROVED BY THE ENGINEER, WILL BE ALLOWED FOR BORED PVC SCHEDULE 80. NO ADDITIONAL COMPENSATION WILL BE PAID TO THE CONTRACTOR WHEN THESE SPECIFIC PURPOSE CONDUIT SYSTEMS ARE SUBSTITUTED FOR THIS PURPOSE.

LIQUID-TIGHT FLEXIBLE METAL CONDUIT (L.T.F.M.) SHALL BE USED WHERE THE PLANS REFER TO FLEXIBLE METAL CONDUIT. FLEXIBLE METAL SHALL NOT BE PERMITTED ON THIS PROJECT.

---ITEM 620: ELECTRICAL CONDUCTORS---

EACH WIRE OF EACH CABLE OR CONDUCTOR SHALL BE TESTED AFTER INSTALLATION BY THE CONTRACTOR. ANY INCOMPLETE CIRCUIT OR ANY DAMAGE TO ANY WIRE OR ANY CABLE WILL BE CAUSE FOR IMMEDIATE REJECTION OF THE ENTIRE CABLE BEING TESTED. THE CONTRACTOR SHALL REMOVE AND REPLACE THE ENTIRE CABLE AT HIS/HER EXPENSE, AND THE REPLACEMENT CABLE SHALL ALSO BE TESTED AFTER INSTALLATION.

ENDS OF WIRES TO BE ATTACHED TO TERMINAL POSTS SHALL BE PROVIDED WITH PROPERLY SIZED SELF-INSULATED SOLDERLESS TERMINALS. THESE TERMINALS SHALL BE ATTACHED TO WIRES WITH A RATCHET TYPE COMPRESSION CRIMPING TOOL PROPERLY SIZED TO THE WIRE. PRE-NUMBERED IDENTIFICATION TAGS OF PLASTIC OR TAPE SHALL BE PLACED AROUND EACH WIRE ADJACENT TO WIRE ENDS

GENERAL NOTES AND SPECIFICATION DATA--

---ITEM 620: ELECTRICAL CONDUCTORS---, CONT'D
IN THE CONTROLLER, SIGNAL HEADS AND SIGNAL POLE TERMINAL BLOCKS.

ALL INSULATED POWER CONDUCTORS SHALL BE COLOR CODED IN ACCORDANCE WITH THE CURRENT EDITION OF THE NATIONAL ELECTRICAL CODE. THE NEUTRAL CONDUCTOR SHALL BE WHITE. WHITE SHALL NOT BE USED FOR ANY OTHER CONDUCTOR. THE GROUNDING CONDUCTOR SHALL BE BARE OR GREEN. GREEN SHALL NOT BE USED FOR ANY OTHER CONDUCTOR.

COLORED TAPE MARKING SHALL NOT BE USED ON CONDUCTORS SIZE 6 AWG OR SMALLER.

GROUNDING CONDUCTORS THAT SHARE THE SAME CONDUIT, JUCTION BOX, GROUND BOX OR STRUCTURE SHALL BE BONDED TOGETHER AT EVERY ACCESSIBLE POINT IN ACCORDANCE WITH THE CURRENT EDITION OF THE NATIONAL ELECTRICAL CODE.

---ITEM 624: GROUND BOXES---

ALL GROUND BOXES FOR THIS PROJECT SHALL BE PRECAST POLYMER CONCRETE OF THE SIZE AND TYPE SPECIFIED.

GROUND BOXES SHALL BE SHOWN ON STANDARD SHEET ED (2)-98. THE COVER SHALL BE LEGIBLY IMPRINTED WITH THE WORDS "TRAFFIC SIGNAL" IN MINIMUM 1" LETTERS OR "ILLUMINATION" DEPENDING ON THE TYPE OF INSTALLATION. GROUNDBOX LOCATIONS SHOWN ON THE PLANS ARE APPROXIMATE. THE GROUND BOXES SHALL NOT BE PLACED IN DRIVEWAYS OR WHEELCHAIR RAMPS. ALTERNATE GROUND BOX LOCATIONS SHALL BE AS DIRECTED BY THE ENGINEER. GROUND BOX APRONS SHALL HAVE A .02 FOOT/FOOT SLOPE. ALL GROUND BOXES SHALL BE PLACED CLEAR OF ADA RAMPS.

GROUND BOX LOCATIONS SHOWN ON THE PLANS ARE APPROXIMATE LOCATIONS. THE GROUND BOXES SHALL NOT BE PLACED IN SIDEWALKS OR DRIVEWAYS. ALTERNATE GROUND BOX LOCATIONS SHALL BE AS DIRECTED BY THE ENGINEER.

GROUND BOX COVERS SHALL BE GROUNDED BY A GROUND ROD IN THE GROUND IN ACCORDANCE WITH ARTICLE 250.2.D OF THE 1999 NATIONAL ELECTRICAL CODE.

THE CONTRACTOR SHALL PROVIDE ALL PERSONNEL AND EQUIPMENT NECESSARY TO REMOVE GROUND BOX LIDS FOR INSPECTION BY THE ENGINEER. THE CONTRACTOR SHALL PROVIDE THIS ASSISTANCE WITHIN 24 HOURS AFTER NOTIFICATION FROM THE ENGINEER.

GENERAL NOTES AND SPECIFICATION DATA--

---ITEM 628: ELECTRICAL SERVICES---

THE CONTRACTOR SHALL IDENTIFY THE SERVICE POLE WITH AN ADDRESS NUMBER ASSIGNED BY THE POWER COMPANY. THIS NUMBER SHALL HAVE 2" NUMERALS VISIBLE FROM THE HIGHWAY. THEY SHALL BE CUT OUT ALUMINUM FIGURES NAILED TO WOOD POLES OR PAINTED FIGURES ON STEEL POLES.

SERVICE POLES SHALL BE GROUNDED IN ACCORDANCE WITH THE CURRENT EDITION OF THE NATIONAL ELECTRIC CODE. THE COST OF SUCH GROUNDING SHALL BE INCLUDED IN THE UNIT PRICE FOR THIS ITEM.

THE CONTRACTOR SHALL VERIFY AND COORDINATE SERVICE POLE LOCATIONS WITH THE ENGINEERING SECTION OF THE APPROPRIATE UTILITY DISTRICT.

ANY AND ALL COST ASSOCIATED WITH THE INSTALLATION AND CONNECTION OF SERVICE POLE TO THE ELECTRICAL UTILITY COMPANY WILL BE CONSIDERED INCIDENTAL TO THE SERVICE POLE. THIS INCLUDES CONDUIT, CONDUIT FITTINGS AND ELECTRICAL CONDUCTORS.

A LIGHTNING ARRESTOR SHALL BE MOUNTED IN A NEMA 1 ENCLOSURE OR A NEMA 3R ENCLOSURE TO CONTAIN FRAGMENTS IN THE EVENT OF A LIGHTNING STRIKE.

SERVICE POLES SHALL BE GROUNDED IN ACCORDANCE WITH THE CURRENT EDITION OF THE NATIONAL ELECTRIC CODE. THE COST OF SUCH GROUNDING SHALL BE INCLUDED IN THE UNIT PRICE FOR THIS ITEM.

THE CONTRACTOR SHALL VERIFY AND COORDINATE SERVICE POLE LOCATIONS WITH THE ENGINEERING SECTION OF THE APPROPRIATE UTILITY DISTRICT.

ANY AND ALL COST ASSOCIATED WITH TH INSTALLATION AND CONNECTION OF SERVICE POLE TO THE ELECTRICAL UTILITY COMPANY WILL BE CONSIDERED INCIDENTAL TO THE SERVICE POLE. THIS INCLUDES CONDUIT, CONDUIT FITTINGS AND ELECTRICAL CONDUCTORS.

SERVICE POLE ADDRESS NUMBERS AND LETTERS SHALL BE FURNISHED AND INSTALLED BY THE CONTRACTOR. TYPE AND SIZE OF LETTERS AND NUMBERS SHALL BE APPROVED BY THE ENGINEER.

THE SERVICE ENCLOSURES SHALL BE LOCKABLE AND SHALL BE EQUIPPED WITH MASTER #2195 PADLOCKS. EACH ENCLOSURE SHALL BE SUPPLIED WITH TWO KEYS. ALL LOCKS SHALL BE KEYED ALIKE.

ALL CTMS SERVICE POLE LOAD CENTERS SHALL BE EQUIPPED WITH A 100 AMP (MINIMUM) MAIN CIRCUIT BREAKER AND SHALL ACCOMMODATE A MINIMUM OF SIXTEEN SINGLE POLE CIRCUIT BREAKERS.

GENERAL NOTES AND SPECIFICATION DATA--

---ITEM 628: ELECTRICAL SERVICES---, CONT'D
ALL CONDUIT ENTRIES INTO SERVICE ENCLOSURES SHALL HAVE THREADED HUBS.

---ITEMS 634 & 636 PLYWOOD SIGNS AND ALUMINUM SIGNS---

COMPLETE SIGN BLANKS AND PANELS SHALL BE HANDLED AND STORED AT THE JOB SITE IN SUCH A MANNER THAT CORNERS, EDGES AND FACES ARE NOT DAMAGED. FINISHED SIGN BLANKS SHALL BE STORED IN EITHER A WEATHER PROOF WAREHOUSE OR OUTSIDE AND OFF THE GROUND IN A VERTICAL POSITION. ALL PAPER, CARDBOARD AND CHEMICALLY TREATED SEPARATORS AND PACKAGING SHALL BE REMOVED PRIOR TO OUTSIDE STORAGE.

THE CONTRACTOR'S ATTENTION IS CALLED TO THE FACT THAT ALL SIGNS WITH BLUE, BROWN, GREEN, ORANGE, RED, AND YELLOW BACKGROUNDS SHALL BE FABRICATED WITH TYPE C (HIGH SPECIFIC INTENSITY) REFLECTIVE SHEETING. WHITE BACKGROUND SIGNS SHALL BE FABRICATED WITH TYPE A (ENGINEER GRADE) REFLECTIVE SHEETING.

WHITE LEGENDS AND BORDERS SHALL BE WHITE TYPE C (HIGH SPECIFIC INTENSITY) REFLECTIVE SHEETING. REFLECTORIZED REMOVABLE LEGEND WILL NOT BE ALLOWED.

---ITEM 644 SMALL ROADSIDE SIGN ASSEMBLIES---

ALL SIGNS SHALL BE INSTALLED IN ACCORDANCE WITH THE 1980 "TEXAS MANUAL ON UNIFORM TRAFFIC CONTROL DEVICES".

ANY DETAIL THAT CONFLICTS WITH THE STANDARD PLAN SHEETS SHALL BE BROUGHT TO THE ATTENTION OF THE ENGINEER PRIOR TO CONSTRUCTION UNLESS A NOTE IS PLACED ADJACENT TO THE DETAIL TO INDICATE AN INTENTIONAL DEVIATION FROM THE STANDARD PLAN SHEETS.

THE CONTRACTOR SHALL DETERMINE THE POST LENGTHS AND VERIFY THEM PRIOR TO ORDERING THE MATERIALS IN ORDER TO MEET THE FIELD CONDITIONS AND TO CONFORM TO THE MINIMUM SIGN MOUNTING HEIGHTS IN ACCORDANCE WITH THE 1980 "TEXAS MANUAL ON UNIFORM TRAFFIC CONTROL DEVICES".

THE CONTRACTOR SHALL PROBE BEFORE DRILLING FOR FOUNDATIONS TO DETERMINE THE LOCATION OF ALL UTILITIES AND STRUCTURES. THIS WORK WILL NOT BE PAID FOR DIRECTLY BUT SHALL BE SUBSIDIARY TO THE BID ITEMS INVOLVED.

ALL EXCESS EXCAVATION SHALL BE SPREAD UNIFORMLY INSIDE THE RIGHT OF WAY AS DIRECTED BY THE ENGINEER AND SHALL BE INCLUDED IN THE PRICE OF THESE ITEMS.

GENERAL NOTES AND SPECIFICATION DATA--

---ITEM 644 SMALL ROADSIDE SIGN ASSEMBLIES---, CONT'D

ALL SIGNS SHALL BE ERECTED ACCORDING TO THE LOCATIONS SHOWN ON THE SIGNING LAYOUT SHEETS EXCEPT THAT THE ENGINEER MAY SHIFT A SIGN IN ORDER TO SECURE A MORE DESIRABLE LOCATION. THE CONTRACTOR WILL STAKE ALL SIGN LOCATIONS AS SHOWN IN THE PLANS AND APPROVED BY THE ENGINEER. IT IS THE INTENT OF THE PLANS TO ERECT ALL ROADSIDE TRAFFIC SIGNS WITH THE SIGN EDGE A MINIMUM OF 6 FEET FROM THE EDGE OF THE SHOULDER, OR IF NONE, 12 FEET FROM THE EDGE OF TRAVEL LANE. IN CURB AND GUTTER SECTIONS THE SIGN EDGE SHALL BE A MINIMUM OF 2 FEET FROM THE FACE OF THE CURB.

THE CONTRACTOR'S ATTENTION IS CALLED TO THE FACT THAT THE SIGNING STANDARD PLAN SHEETS FOR REGULATORY AND WARNING SIGNS SPECIFY THAT 0.625 INCH PLYWOOD BE USED FOR SIGN BLANK MATERIAL, AS INDICATED BY ITEM 634. FOR THIS PROJECT, ALUMINUM TYPE A MAY BE FURNISHED FOR THE SIGNS SHOWN ON THESE PLAN SHEETS. MOUNTING DETAILS FOR THE ALUMINUM TYPE A SIGNS SHALL BE THE SAME AS SHOWN FOR PLYWOOD SIGNS ON SMD STANDARD DETAIL SHEETS. UNLESS OTHERWISE SPECIFIED, ALUMINUM TYPE A SIGNS SHALL BE 0.08 INCHES THICK.

SIGN TYPES FOR WHICH DESIGN DETAILS ARE NOT SHOWN ON THE PLANS SHALL CONFORM WITH THE LATEST EDITION OF THE DEPARTMENT'S "STANDARD HIGHWAY SIGN DESIGNS FOR TEXAS" MANUAL.

---ITEM 647 LARGE ROADSIDE SIGN SUPPORTS---

NEW SIGN FOUNDATION STUBS, WHEN LEFT OVERNIGHT WITHOUT INSTALLED SIGNS AND POSTS, SHALL BE PROTECTED BY THE CONTRACTOR WITH FLASHING ELECTRIC LIGHTS.

---ITEM 649 REMOVING OR RELOCATING ROADSIDE SIGN ASSEMBLIES---

THE CONTRACTOR SHALL REMOVE THE COMPLETE SIGN INSTALLATION AND SEPARATE THE SIGN POST AT THE CONCRETE FOUNDATION. THE CONTRACTOR SHALL DISPOSE OF THE CONCRETE FOUNDATION IN ACCORDANCE WITH THIS BID ITEM. EXCEPT FOR CONCRETE FOUNDATIONS, ALL REMOVED SIGN PANELS, SIGN POSTS, AND HARDWARE SHALL REMAIN THE PROPERTY OF THE DEPARTMENT. ALL REMOVED SIGN INSTALLATIONS SHALL BE COMPLETELY DISASSEMBLED. ALL SALVAGEABLE SECTIONS OF THE WOOD SIGN SHALL BE RECYCLED BY TXDOT. THE CONTRACTOR WILL BE REQUIRED TO HAUL THE REMOVED SIGN MATERIAL TO THE MAINTENANCE YARD LOCATED 1817 BOB BULLOCK LOOP, LAREDO, TEXAS. NO SIGNS SHALL BE REMOVED WITHOUT PRIOR APPROVAL OF THE ENGINEER. THIS WORK WILL NOT BE PAID FOR DIRECTLY BUT WILL BE SUBSIDIARY TO ITEM 100 "PREP ROW".

GENERAL NOTES AND SPECIFICATION DATA--

---ITEM 650 OVERHEAD SIGN SUPPORTS--- CONT'D
BID CODES FOR SIGN STRUCTURES ARE SHOWN FOR BIDDING PURPOSES. FOR ACTUAL HEIGHTS, SPANS LENGTHS AND MINIMUM CLEARANCE, PLEASE REFER TO DETAILS SHOWN ON "SIGN SUPPORTS ELEVATION SHEETS". THE CONTRACTOR SHALL TAKE IN ACCOUNT DETAILS SHOWN ON THESE SHEETS FOR BIDDING OF THESE SIGN STRUCTURES.

BALANCED TEE SUPPORTS WITH A SPAN OF 30 FEET AND HEIGHT OF 21 FEET WILL BE PAID FOR UNDER ITEM 650.

LOCATIONS OF SIGN PANELS ON OVERHEAD STRUCTURES ARE APPROXIMATE AND SHALL BE CHECKED IN THE FIELD PRIOR TO ERECTION.

STRUCTURE NUMBERS SHALL BE STENCILED ON THE NEW STRUCTURES FOR PERMANENT IDENTIFICATION.

ALL SIGN STRUCTURE ELEVATIONS, DETAILS, AND DIMENSIONS SHOWN IN THE PLANS SHALL BE FIELD CHECKED BY THE CONTRACTOR PRIOR TO FABRICATION.

---ITEM 656 ILLUMINATION ASSEMBLIES---
DISPOSAL OF SURPLUS MATERIAL REQUIRED FOR FOUNDATIONS WILL BE CONSIDERED INCIDENTAL TO ITEM 656, "FOUNDATIONS FOR SIGNS, TRAFFIC SIGNALS AND ROADWAY ILLUMINATION ASSEMBLIES". ALL SURPLUS EXCAVATED MATERIAL SHALL BE DISPOSED OF AS DIRECTED BY THE ENGINEER.

FOR THIS PROJECT, THE CONTRACTOR SHALL USE A TEXAS PENETROMETER READING OF FIFTEEN (15).

ALL STUB-OUTS IN FOUNDATION AND CONCRETE STRUCTURES SHALL BE RIGID METAL CONDUIT (RMC) AND SHALL BE CONSIDERED INCIDENTAL.

---ITEM 658 DELINEATOR AND OBJECT MARKER ASSEMBLIES---
DELINEATOR ASSEMBLIES SHALL BE INSTALLED 8 FEET FROM THE EDGE OF THE SHOULDER UNLESS RESTRICTED BY SOME OBSTRUCTION, IN WHICH CASE, THE DELINEATOR ASSEMBLY SHALL BE PLACED BETWEEN 2 FEET AND 8 FEET FROM THE EDGE OF THE SHOULDER.

BI-DIRECTIONAL INSTALLATION OF OBJECT MARKERS SHALL BE BY ANY METHOD SATISFACTORY TO THE ENGINEER.

GENERAL NOTES AND SPECIFICATION DATA--

---ITEMS 662 AND 666 WORK ZONE PAVEMENT MARKINGS AND REFLECTORIZED---

---PAVEMENT MARKINGS---
ALL PERMANENT PAVEMENT MARKINGS FOR THIS PROJECT UNDER THIS ITEM SHALL BE 90 MIL THICK THERMOPLASTIC.

---ITEM 677 ELIMINATING EXISTING PAVEMENT MARKINGS AND MARKERS---
ASPHALT AND AGGREGATE TYPES AND GRADES SHALL BE AS APPROVED IN WRITING BY THE ENGINEER WHEN A SURFACE TREATMENT IS USED TO ELIMINATE EXISTING PAVEMENT MARKINGS.

---ITEM 680 INSTALLATION OF HIGHWAY TRAFFIC SIGNALS---
THE CONTRACTOR, AT HIS OWN EXPENSE, SHALL PROVIDE ANY ADJUSTMENTS, MODIFICATIONS OR CHANGES TO THE TRAFFIC SIGNAL HEADS, GROUND BOXES, CABLE AND OTHER APPURTENANCES ASSOCIATED WITH ALL EXISTING TRAFFIC SIGNAL INSTALLATIONS, AS APPROVED BY THE ENGINEER THAT MAY BE NECESSARY FOR THE SAFE HANDLING OF TRAFFIC IN THE WORK ZONE DURING CONSTRUCTION AND FOR THE CONSTRUCTION OF ALL PERMANENT SIGNALIZED LOCATIONS.

ALL PERMANENT SIGNS MOUNTED ON TRAFFIC SIGNAL SPAN WIRES, TRAFFIC SIGNAL POLES, OR TRAFFIC SIGNAL MAST ARMS WILL BE FURNISHED AND INSTALLED BY THE CONTRACTOR. THE CONTRACTOR SHALL SUPPLY THE MOUNTING HARDWARE FOR THE SIGN. THE COST OF THE HARDWARE AND ERECTING THE SIGNS SHALL BE SUBSIDIARY TO ITEM 680.

ALL ILLUMINATION FIXTURES SHALL BE 250 WATT HIGH PRESSURE SODIUM FIXTURES, OPERATING AT 240 VOLTS.

THE CONTRACTOR SHALL FURNISH ALL LABOR, TOOLS, EQUIPMENT, AND MATERIALS, CALLED FOR IN THE PROJECT PLANS AND SPECIFICATIONS AND AS ARE NECESSARY FOR A COMPLETE AND OPERATING SIGNAL INSTALLATION.

THE CONTRACTOR SHALL PROVIDE A FULL-TIME QUALIFIED TRAFFIC SIGNAL TECHNICIAN TO BE RESPONSIBLE FOR THE INSTALLATION, MAINTENANCE AND/OR REPLACEMENT OF ALL TRAFFIC SIGNAL DEVICES. TECHNICIAN IS TO BE ON CALL 24-HOURS A DAY.

ALL STAKING SHALL BE DONE BY THE CONTRACTOR SUBJECT TO THE APPROVAL OF THE ENGINEER IN THE FIELD.

GENERAL NOTES AND SPECIFICATION DATA--

---ITEM 680 INSTALLATION OF HIGHWAY TRAFFIC SIGNALS--- CONT'D
THE CONTRACTOR WILL BE RESPONSIBLE FOR ADJUSTMENTS IN PROJECT CONSTRUCTION WHICH MAY BE NEEDED BECAUSE OF CONFLICTS WITH UNDERGROUND UTILITIES.

ALL CONDUCTORS SHALL BE CONTINUOUS WITHOUT SPLICES FROM SIGNAL CONTROLLER TO TERMINAL BLOCK AND FROM TERMINAL BLOCK TO SIGNAL HEADS, BASELIGHTS, AND LUMINAIRES.

ALL ELECTRICAL WORK DONE SHALL BE IN CONFORMANCE WITH THE CURRENT EDITION OF THE NATIONAL ELECTRICAL CODE (N.E.C.).

ANY ABRASION TO ANY CONDUCTOR INSULATION WHILE PULLING CABLE FOR THE TRAFFIC SIGNAL SYSTEM WILL BE CAUSE FOR IMMEDIATE REJECTION. THE CONTRACTOR SHALL REMOVE AND REPLACE THE ENTIRE CABLE AT HIS/HER EXPENSE.

THE CONTROLLER HAS HOUSING, SIGNAL COMMON, SERVICE COMMON, CONDUIT, AND EQUAL TO METAL SIGNAL SUPPORTS SHALL BE BONDED WITH NO. 6 AWG COPPER WIRE TO FORM A CONTINUOUS SYSTEM AND EFFECTIVELY GROUNDED TO 5/8" X 10 FEET COPPER CLAD GROUND RODS AS INDICATED IN THE PLANS.

ALL SIGNAL HEADS SHALL BE WRAPPED WITH BURLAP SO THAT SIGNAL FACES CANNOT BE SEEN FROM THE TIME OF INSTALLATION UNTIL PLACED IN OPERATION.

ALL SIGNAL HEADS FURNISHED BY THE CONTRACTOR SHALL BE OF THE SAME MANUFACTURER.

ALL MAST ARM POLE ASSEMBLIES SHALL BE LOCATED A MINIMUM OF 4 FEET FROM EDGE OF PAVEMENT. ALL SIGNAL HEADS WILL BE MOUNTED A MINIMUM OF 19 FEET IN HEIGHT.

THE CONTRACTOR WILL BE RESPONSIBLE FOR ANY ADJUSTMENTS TO DETECTION SENSOR ON VIVDS AS ROADS ARE RECONSTRUCTED. ADJUSTMENTS ARE TO BE MADE BY QUALIFIED PERSONNEL ONLY.

THE CONTRACTOR SHALL FURNISH AND ATTACH COMPRESSION TYPE CONNECTORS INSTALLED WITH A COMPRESSION MECHANICAL RELEASE HAND CRIMPING TOOL TO EACH INDIVIDUAL CONDUCTOR BEFORE MAKING CONNECTIONS TO ALL TERMINAL STRIPS

THE CONTRACTOR SHALL FURNISH STRANDED CONDUCTORS.

READY MIX CONCRETE MAY BE USED FOR THIS PROJECT.

GENERAL NOTES AND SPECIFICATION DATA--

---ITEM 680 INSTALLATION OF HIGHWAY TRAFFIC SIGNALS--- CONT'D
THE CONTRACTOR MAY USE MEMBRANE CURING ON CONCRETE WORK AS SPECIFIED BY ITEM 526 "MEMBRANE CURING".

STANDARD 4 1/2" GALVANIZED PIPE TYPE POLES (EXCEPT BREAKAWAY TYPE) USED ON THIS PROJECT ARE SUBJECT ONLY TO THE INSPECTION OF THE ENGINEER FOR THEIR ACCEPTANCE. NO MILL TEST REPORTS OR DOCUMENTATION WILL BE REQUIRED.

CONTRACTOR TO INSTALL ADDITIONAL CONTROLLER CABINETS WHERE SPECIFIED. THESE CABINETS WILL BE LOCATED TO THE EAST OF THE EXISTING CABINETS, OR AS SPECIFIED BY THE ENGINEER. SURVEILLANCE CAMERA EQUIPMENT FROM THE EXISTING CABINET WILL BE RELOCATED BY THE CONTRACTOR TO THE NEW CABINET. EXTENSIONS AND COUPLINGS WILL BE USED TO EXTEND THE EXISTING CONDUIT TO THE NEW CABINET. THE CONTRACTOR SHALL LABEL THE OUTSIDE OF THE EXISTING CABINET WITH "SIGNAL CABINET".

TRAFFIC SIGNAL CONTROLLER SHALL BE TS2 AND SHALL BE EQUIPPED AS FOLLOWS:
- TYPE 2 - SDLC AND A, B, C CONNECTORS
- CABINET SIZE - SIZE 6
- BASE MOUNT - BACK PANEL CONFIG 4 (16 POSITION)
- NTCIP: DOWNWARD COMPATIBLE WITH EXISTING SYSTEM
  CONTROLLERS SHALL BE EQUIPPED WITH TWO FANS

A CONTINUOUS BARE OR GREEN INSULATED COPPER WIRE NO. 8 OR LARGER SHALL BE INSTALLED IN EVERY PVC, RMC, AND LTFC THOUGHOUT THE ELECTRICAL SYSTEM IN ACCORDANCE WITH, THE ELECTRICAL DETAIL SHEETS, AND THE LATEST EDITION OF HTE NATIONAL ELECTRICAL CODE, EXCEPT FOR CONDUIT WITH LOOP DETECTORS ONLY.

---ITEM 682: VEHICLE AND PEDESTRIAN SIGNAL HEADS---

ACTUAL VEHICLE AND PEDESTRIAN SIGNAL HEAD QUANTITIES, LOCATIONS AND CONFIGURATIONS SHALL BE VERIFIED AT EACH INTERSECTION AND SHALL BE AS DIRECTED AND/OR APPROVED BY THE ENGINEER. HEADS FOR THE TRAFFIC SIGNAL SHALL BE MADE OF POLYCARBONATE, SHALL BE HIGHWAY YELLOW IN COLOR AND SHALL BE FROM THE SAME MANUFACTURER.

LAMP REQUIREMENTS FOR THIS ITEM WILL BE AS PER SPECIAL SPECIFICATION 6955 "12 INCH LED TRAFFIC SIGNAL LAMP", EXCEPT FOR PAYMENT. THIS REQUIREMENT WILL NOT BE PAID FOR DIRECTLY, BUT SHALL BE SUBSIDIARY TO ITEM 682 "VEHICLE AND PEDESTRIAN SIGNAL HEADS"

GENERAL NOTES AND SPECIFICATION DATA--

---ITEM 684: TRAFFIC SIGNAL CABLES---

FOR EACH TRAFFIC SIGNAL INSTALLATION, A MINIMUM LENGTH OF 2 FEET FOR EACH CABLE RUN SHALL BE LEFT IN EACH GROUND BOX AND A MINIMUM LENGTH OF 2 FEET IN ADDITION TO THE REQUIRED LENGTH SHALL BE LEFT IN EACH STEEL POLE FOR EACH SEPARATE CABLE THAT RUNS THROUGH IT. FOR EACH CONDUCTOR TERMINATING IN THE CONTROLLER CABINET AN EXTRA 5 FEET IN LENGTH SHALL BE PROVIDED.

ACTUAL CABLE LENGTHS SHALL BE VERIFIED AT EACH LOCATION AND SHALL BE AS DIRECTED AND/OR APPROVED BY THE ENGINEER. ALL CONDUCTORS SHALL BE CONTINUOUS WITHOUT SPLICE FROM TERMINAL POINT TO TERMINAL POINT OR AS OTHERWISE DIRECTED BY THE ENGINEER. WIRE NUTS WILL NOT BE PERMITTED.

---ITEM 686: TRAFFIC SIGNAL POLE ASSEMBLIES (STEEL)---

THE CONTRACTOR SHALL USE A WELDED STEEL TEMPLATE TO HOLD THE ANCHOR BOLTS AND CONDUITS RIGIDLY IN PLACE FOR A MAST ARM POLE OR STEEL STRAIN POLE ASSEMBLY.

THE CONTRACTOR SHALL LEAVE A MINIMUM OF ONE FULL DIAMETER THREAD EXPOSED ON EACH ANCHOR BOLT SECURING A SIGNAL POLE.

ANCHOR BOLTS FOR STEEL STRAIN POLES SHALL BE SET SO THAT TWO ARE IN COMPRESSION AND TWO ARE IN TENSION.

FOR THIS PROJECT THE CONTRACTOR SHALL USE A TEXAS CONE PENETROMETER READING OF 15. THE DRILLED SHAFT LENGTH SHALL BE FROM SURFACE ELEVATION TO THE BOTTOM OF THE DRILLED SHAFT. ADDITIONAL LENGTH OF POLE FOUNDATION FROM SURFACE LEVEL TO ROADWAY LEVEL MAY BE REQUIRED FOR UNUSUAL LOCATIONS. DRILLED SHAFT DEPTH SHALL BE AS REQUIRED REGARDLESS OF LENGTH OF POLE FOUNDATION. POLE FOUNDATION FROM SURFACE LEVEL TO ROADWAY LEVEL SHALL NOT EXCEED 4 FEET OR AS APPROVED BY THE ENGINEER IN THE FIELD.

ACTUAL TRAFFIC SIGNAL MAST ARM LENGTHS REQUIRED SHALL BE VERIFIED AT EACH INTERSECTION BEFORE ORDERING, AND SHALL BE AS DIRECTED AND/OR APPROVED BY THE ENGINEER. TRAFFIC SIGNAL POLE SHALL BE PLACED AT 4 FEET DESIRABLE MINIMUM DISTANCE FROM ROADWAY CURB OR EDGE OF PAVEMENT OR AS APPROVED BY THE ENGINEER. POLE PLACEMENT SHALL BE CLEAR OF THE ADA RAMPS.

GENERAL NOTES AND SPECIFICATION DATA--

---ITEM 688: TRAFFIC SIGNAL DETECTORS---

VIVDS CAMERAS AND DETECTION ZONES WILL BE SET BY CONTRACTOR'S QUALIFIED PERSONNEL ONLY, AND APPROVED BY THE ENGINEER.

PEDESTRIAN PUSH BUTTONS FURNISHED BY THE CONTRACTOR TO BE AT LEAST 1" IN DIAMETER IN THE SMALLEST DIMENSION.

THE CONTRACTOR SHALL INSTALL A RUBBER GROMMET OR SEALANT BETWEEN THE PUSH BUTTON ASSEMBLY AND THE SIGNAL POLE TO PREVENT WATER INTRUSION.

POLE PLACEMENT SHALL BE CLEAR OF THE WHEELCHAIR RAMPS.

---ITEM 3116 QC/QA OF HOT MIX ASPHALT---

SHOULDERS AND/OR RAMPS WILL BE ELIGIBLE FOR IN-PLACE AIR VOID TESTING AND PAY ADJUSTMENTS.

THE PG BINDER USED FOR THIS PROJECT WIIL BE PG 76-22.

THE CONTRACTOR'S ATTENTION IS CALLED TO THE FACT THAT VERIFICATION OF THE DESIGN WILL REQUIRE APPROXIMATELY 10 WORKING DAYS AND THAT THE CONTRACTOR SHALL ADVISE THE ENGINEER OF THE LOCATION OF THE SOURCES AND PRELIMINARILY DESIGN SUFFICIENTLLY IN ADVANCE TO AVOID DELAY.

THE ASPHALT PLANT SHALL BE EQUIPPED WITH TRUCK SCALES AS DEFINED IN ITEM 520.3(1) OF THE STANDARD SPECIFICATIONS. THREE MASS TICKETS BEARING THE DATE, TRUCK NUMBER AND GROSS, NET AND TARE MASS SHALL BE GIVEN TO THE TRUCK DRIVER BY THE CONTRACTOR'S OR ASPHALT PLANT PERSONNEL, AND THEN GIVEN TO THE STATE INSPECTOR AT THE SPREADING AND FINISHING MACHINE DURING HOT MIX OPERATIONS. THE CONTRACTOR MAY BE REQUIRED BY THE ENGINEER TO WEIGH LOADS OF ASPHALTIC CONCRETE ON PUBLIC SCALES OR PORTABLE PLATFORM SCALES TO ENSURE THE PROPER MASS OF THE MATERIAL.

NO COMMERCIAL OR CONTRACTOR'S RAP WILL BE ALLOWED IN THE MIXTURE UNLES APPROVED BY THE ENGINEER.

SHOULDER AND/OR RAMPS WILL BE ELIGIBLE FOR IN-PLACE AIR VOID TESTING AND PAY ADJUSTMENTS.

LIMESTONE SCREENINGS SHALL BE USED.

ADDITION OF 1.5 PERCENT TYPE A HYDRATED LIME BASED ON THE DRY WEIGHT OF THE AGGREGATE IS REQUIRED. LIME ADDITION SHALL BE IN ACCORDANCE WITH

GENERAL NOTES AND SPECIFICATION DATA--

---ITEM 3116 QC/QA OF HOT MIX ASPHALT---, CONT'D
ITEM 301. ALL MOISTURE DAMAGE TESTING REQUIREMENTS OF ITEM 301 ARE VOIDED.

PRIOR TO SHIPPING ASPHALT TO THE PROJECT, THE CONTRACTOR SHALL FURNISH THE ENGINEER WITH THE NAME OF THE SUPPLIER AS WELL AS SAMPLES OF THE ASPHALT HE PROPOSES TO USE SO THAT THE TYPE, GRADE AND RATE OF APPLICATION OF ASPHALT MAY BE DETERMINED.

IN ADDITION TO THE TACK COAT MATERIALS SPECIFIED IN THESE STANDARD SPECIFICATIONS, THE CONTRACTOR, IF HE SO DESIRES, MAY USE MS-2 OR MS-1. THE CONTRACTOR SHALL EXERCISE DILIGENCE IN THE APPLICATION OF "TACK COAT" BY THE USE OF FLAGGING AND ROLLING PROCEDURES TO KEEP FROM SPRAYING OR SPLATTERING THE TRAVELING PUBLIC WITH ASPHALTIC MATERIAL.

A MINIMUM POLISH VALUE OF 32 WHEN TESTED IN ACCORDANCE WITH TEST METHOD TEX-438-A WILL BE REQUIRED FOR THE AGGREGATE USED IN THE SURFACE COURSE OF THE TRAVEL LANES, UNLESS SILICEOUS AGGREGATE WHICH HAS A KNOWN SATISFACTORY SKID HISTORY BASED ON TXDOT SKID TRAILER MEASUREMENTS IS USED.

NO POLISH VALUE IS REQUIRED FOR BASE COURSES. THE SOURCES FOR THESE SATISFACTORY AGGREGATES MAY BE VIEWED WITH THE AREA ENGINEER ASSIGNED TO THIS PROJECT.

DENSITY REQUIREMENTS FOR THE MAINLANES SHALL ALSO APPLY TO THE SHOULDERS, UNLESS OTHERWISE DIRECTED BY THE ENGINEER.

THE POINT OF SAMPLING FOR TESTS, TEST METHOD TEX-217-F (PART 1 AND PART II), SHALL BE THE COARSE AGGREGATE STOCKPILE WHEN THE DRYER- DRUM MIXING PLANT IS USED. THE POINT OF SAMPLING WHEN THE BATCH PLANT IS USED SHALL BE AT THE HOT BINS.

ALL AGGREGATES USED IN BASE AND SURFACE COURSES OF ACP WILL BE SUBJECTED TO FOUR CYCLES OF THE SOUNDNESS TEST IN ACCORDANCE WITH TEST METHOD TEX-411-A. THE LOSS SHALL NOT BE GREATER THAN 30 PERCENT WHEN MAGNESIUM SULPHATE IS USED.

THE CONTRACTOR WILL BE REQUIRED TO PROVIDE TWO (2) LAPTOP COMPUTERS WITH THE FOLLOWING MINIMUM SPECIFICATIONS AND SOFTWARE INSTALLED:

PENTIUM 200 MICROPROCESSOR
32 MEG MEMORY
ONE 3 1/2" FLOPPY DRIVE
2.5 GB HARD DRIVE
MOUSE
WINDOWS 95 OPERATING SYSTEM

GENERAL NOTES AND SPECIFICATION DATA--

---ITEM 3116 QC/QA OF HOT MIX ASPHALT---, CONT'D
LASTEST RELEASE OF LOTUS 123 COMPATIBLE WITH WINDOWS 95 OP SYSTEM
LASTEST RELEASE OF MICROSOFT EXCEL AND WORD COMPATIBLE WITH WINDOWS 95 OP SYSTEM

THE CONTRACTOR WILL BE RESPONSIBLE FOR HAVING AN EQUIVALENT OR BETTER LAPTOP AVAILABLE AT ALL TIMES AS A BACK UP IN THE EVENT THAT THE ORIGINAL LAPTOP COMPUTERS SHOULD MALFUNCTION OR FOR ANY REPAIRS THE ORIGINAL LAPTOPS MAY REQUIRE, FOR THE DURATION OF THE PROJECT.

UPON COMPLETION OF THE PROJECT, THE COMPUTER WILL REMAIN THE PROPERTY OF THE CONTRACTOR.

THE MINIMUM WIDTH OF COMPACTED SUBGRADE SHALL BE NO LESS THAN 10 FEET AT LOCATIONS WHERE PROPOSED ASPHALT ROADWAYS TAPER INTO OTHER EXISTING OR PROPOSED ROADWAYS.

---ITEM 5001 TEMPORARY METAL BEAM GUARD FENCE---

TYPE C REFLECTORS SHALL BE REQUIRED ON ALL TEMPORARY METAL BEAM GUARD FENCE.

---ITEM 5004 TEMPORARY EROSION, SEDIMENT AND WATER POLLUTION PREVENTION AND CONTROL---

FOR THIS PROJECT, A "STORM WATER POLLUTION PREVENTION PLAN" (SW3P) IS REQUIRED. SINCE THE DISTURBED AREA IS TWO ACRES OR MORE ON THIS PROJECT, A "NOTICE OF INTENT" (NOI) IS ALSO REQUIRED.

THE SW3P FOR THIS PROJECT SHALL CONSIST OF USING THE FOLLOWING ITEMS AS DIRECTED BY THE ENGINEER:

TEMPORARY SEDIMENT CONTROL FENCE
ROCK FILTER DAMS FOR EROSION AND SEDIMENTATION CONTROL
BALED HAY FOR EROSION AND SEDIMENTATION CONTROL
CONSTRUCTION EXITS
EARTHWORK FOR EROSION CONTROL

---ITEM 5469 SINGLE GUARDRAIL TERMINAL---

TYPE I SINGLE GUARDRAIL TERMINAL UNITS SHALL BE USED WHEREVER SINGLE GUARDRAIL TERMINALS ARE SHOWN IN THE PLANS.

GENERAL NOTES AND SPECIFICATION DATA--

---ITEM 5559 COLORED TEXTURIZED CONCRETE---

THE FINISH AND COLOR SHALL BE AS SHOWN ON THE PLANS. A SAMPLE PANEL (3' X 3') SHALL BE SUBMITTED TO THE ENGINEER FOR APPROVAL OF THE COLOR. SAMPLES SHALL BE SUBSIDIARY TO ITEM 423.

THE CONTRACTOR SHALL POUR AND FINISH A 3'X 3' SAMPLE PANEL OF "COLORED-TEXTURIZED CONCRETE". THE PANEL SHALL MEET WITH THE REQUIREMENTS OF THE PLANS AND SPECIFICATIONS AND BE APPROVED BY THE ENGINEER BEFORE FURTHER "COLORED-TEXTURIZED CONCRETE" MAY BE POURED. THE SAMPLE PANEL SHALL BE CONSIDERED TYPICAL FOR THE FINISH, ANY DEVIATION OF COLOR, GRADE, OR DEPTH FROM THE SAMPLE PANEL SHALL BE GROUNDS FOR REJECTION OF "COLOR TEXTURIZED CONCRETE" AND SHALL BE REMOVED AND REPLACED AS SPECIFIED BY THE CONTRACTER. THE SAMPLE PANEL OR ANY REQUIRED REPLACEMENT OF "COLOR TEXTURIZED CONCRETE" SHALL NOT BE PAID FOR DIRECTLY BUT SHALL BE CONSIDERED SUBSIDIARY TO "COLORED-TEXTURIZED CONCRETE".

---ITEM 5579 LANDSCAPE PAVERS---

PART I - GENERAL

THE WORK SHALL INCLUDE ALL LABOR, MATERIALS, EQUIPMENT, AND TRANSPORTATION REQUIRED TO INSTALL INTERLOCKING MODULAR CONCRETE PAVING UNITS.

THE PAVING UNITS SHALL BE DELIVERED TO THE JOB SITE ON PALLETS AND BOUND IN SUCH A MANNER THAT NO DAMAGE OCCURS TO THE PRODUCT DURING HANDLING, HAULING, AND UNLOADING.

PART II - MATERIALS

PAVING UNITS SHALL BE OF THE TYPE SPECIFIED IN THE PLAN SHEETS. COLOR SHALL BE APPROVED BY THE ENGINEER PRIOR TO ANY INSTALLATION OF PAVING UNITS. THE PAVING UNITS SHALL BE SUPPLIED FROM ONE OF THE FOLLOWING COMPANIES, OR A COMPARABLE EQUAL, AS DETERMINED BY THE ENGINEER.

(A) PAVESTONE CO., P.O. BOX 1868, GRAPEVINE, TEXAS 76051
PH. NO. 817-481-5802

(B) ALAMO CONCRETE TILE INC., 1008 HOEFGEN, SAN ANTONIO, TEXAS 78760
PH. NO. 512-534-8821

(C) PAVEX AUSTIN INC., P.O. BOX 19015, AUSTIN, TEXAS 78760
PH. NO. 512-385-8444

GENERAL NOTES AND SPECIFICATION DATA--

---ITEM 5579 LANDSCAPE PAVERS---, CONT'D

(D) VALLEY BLOCK AND BRICK, P.O. DRAWER 2, PHARR, TEXAS 78577
PH. NO. 512-787-3223

THE PAVING UNIT THICKNESS SHALL BE 2-3/8 INCHES. PAVING UNIT SHALL CONFORM TO A.S.T.M. DESIGNATION - C-936-82.

IF THE CONTRACTOR CHOOSES TO USE AN INTERLOCKING CONCRETE PAVING UNIT OTHER THAN THOSE SPECIFIED OR ONE LISTED ABOVE, IT SHALL BE HIS RESPONSIBILITY TO FURNISH THE STATE WITH A PROFESSIONAL LABORATORY TEST CERTIFYING THAT THE SAME MATERIALS USED AND THEIR FABRICATION METHODS MEET OR EXCEED THE PROPERTIES OF THE MATERIAL HEREIN SPECIFIED.

ALL PAVING UNITS SHALL BE FREE OF ANY DEFECTS THAT WOULD INTERFERE WITH THE PROPER PLACEMENT OR IMPAIR THE STRENGTH OR PERFORMANCE OF THE UNITS. MINOR CRACKS INCIDENTAL TO THE USUAL METHOD OF MANUFACTURING OR SHIPPING RESULTING FROM CUSTOMARY METHODS OF HANDLING IN SHIPMENT AND DELIVERY, SHALL BE LEFT TO THE DECISION OF THE ENGINEER FOR ACCEPTANCE.

DURING THE EXECUTION OF THE WORK, UTMOST CARE SHALL BE EXERCISED TO PREVENT DAMAGE TO ANY UTILITIES, STRUCTURES OR RIGHT-OF-WAY. THE CONTRACTOR SHALL BE RESPONSIBLE FOR CONTACTING, LOCATING, AND PROTECTING ALL UNDERGROUND UTILITIES AND STRUCTURES. THE ENGINEER MAY ASSIST THE CONTRACTOR IN LOCATING UNDERGROUND UTILITIES AND STRUCTURES. HOWEVER, ANY DAMAGE TO EXISTING UTILITIES OR STRUCTURES SHALL BE REPAIRED AT THE CONTRACTORS EXPENSE. IF IN THE COURSE OF THE WORK, UNDERGROUND UTILITIES OR STRUCTURES ARE ENCOUNTERED AND ARE IN CONFLICT WITH THE WORK, THE CONTRACTOR SHALL CONTACT THE ENGINEER WHO WILL DIRECT THE NECESSARY ADJUSTMENTS. CHANGES OF THIS NATURE ARE CONSIDERED INCIDENTAL TO THE CONTRACT WORK AND SHALL NOT ENTITLE THE CONTRACTOR TO ADDITIONAL COMPENSATION.

SAND-LAYING COURSE:

THE SAND LAYING COURSE SHALL BE THE RESPONSIBILITY OF THE PAVING UNIT INSTALLER.

EDGE RESTRAINT:

ALL EDGES OF THE INSTALLED PAVING UNITS SHALL BE RESTRAINED. EDGE RESTRAINTS SHALL BE CAST-IN-PLACE CONCRETE GRADE BEAMS (4" X 8" AS SHOWN ON THE PLANS) OR EXISTING CONCRETE CURB AND GUTTER AS SHOWN ON THE PLANS. CONCRETE SHALL BE CLASS "A" CONCRETE, FIVE (5) SACK CEMENT PER CUBIC YARD MIX. EDGE RESTRAINTS SHALL BE SUBSIDIARY TO ITEM 5579.

GENERAL NOTES AND SPECIFICATION DATA--

---ITEM 5579 LANDSCAPE PAVERS---, CONT'D

SIDEWALK RAMPS:

SIDEWALK RAMPS SHALL BE AS DETAILED AS IN THE PLAN SHEETS. RAMPS SHALL BE MADE OF BRICK PAVING UNITS. RAMPS SHALL BE SUBSIDIARY TO ITEM 5579.

PART III - EXECUTION

INSTALLATION CONTRACTOR IS TO HAVE A MINIMUM OF 3 YEARS EXPERIENCE IN THE INSTALLATION OF INTERLOCKING CONCRETE PAVERS.

CONSTRUCTION OF THE SAND LAYING COURSE:

THE COMPACTED SAND LAYING COURSE SHALL BE SPREAD EVENLY OVER THE AREA TO BE PAVED AND THEN SCREEDED TO A LEVEL THAT WILL PRODUCE A MINIMUM ONE (1) INCH THICKNESS WHEN THE PAVING UNITS HAVE BEEN PLACED AND VIBRATED. THE FINAL ELEVATION OF PAVING UNITS SHALL BE 1/4 INCH HIGHER THAN THE ADJACENT CURB, GUTTER, PAVING, ETC. TO ALLOW FOR MINOR SETTLING THAT MAY OCCUR WITHIN THE BASE.

ONCE SCREEDED AND LEVELED TO THE DESIRED ELEVATION, THE SAND LAYING COURSE SHALL NOT BE DISTURBED IN ANY WAY.

LAYING OF THE CONCRETE PAVING UNITS:

THE PAVING UNITS SHALL BE LAID IN THE PATTERN AS NOTED IN THE PLAN SHEETS AND MANUFACTURER'S DETAILS AND SPECIFICATIONS. THE CONTRACTOR SHALL LAY A SAMPLE AREA 20' X 20' FOR PATTERN APPROVAL BY THE ENGINEER BEFORE CONTINUING. THE PAVING UNITS SHALL BE LAID IN SUCH A MANNER THAT THE DESIRED PATTERN IS MAINTAINED AND THE JOINTS BETWEEN THE UNITS ARE TIGHT AS POSSIBLE. THE JOINTS BETWEEN THE UNITS SHALL NOT EXCEED 1/8 INCH.

STRING LINES SHALL BE USED TO HOLD ALL PATTERN LINES TRUE RELATIVE TO THE BACK OF CURB AND GUTTER OR AS DIRECTED BY THE ENGINEER.

THE GAPS AT THE EDGE OF THE PAVER SURFACE SHALL BE FILLED WITH STANDARD EDGE UNITS OR UNITS CUT TO FIT. CUTTING SHALL BE ACCOMPLISHED TO LEAVE A CLEAN EDGE TO THE TRAFFIC SURFACE USING A MASONRY SAW. NO CUTS SHOULD RESULT WITH A PAVER UNIT LESS THAN 1/4 OF THE ORIGINAL UNIT'S DIMENSION.

GENERAL NOTES AND SPECIFICATION DATA--

---ITEM 5579 LANDSCAPE PAVERS---, CONT'D
PAVING UNITS SHALL BE VIBRATED INTO THE SAND LAYING COURSE USING A VIBRATOR CAPABLE OF 3,000 TO 5,000 POUNDS COMPACTION FORCE WITH THE SURFACE CLEAN AND JOINTS OPEN. AFTER VIBRATION, CLEAN MASONRY TYPE SAND AT LEAST 30% OF 1/8 INCH PARTICLES SHALL BE SPREAD OVER THE PAVING UNIT SURFACE, ALLOWED TO DRY, AND VIBRATED INTO JOINTS WITH ADDITIONAL VIBRATOR PASSES AND BRUSHING SO AS TO COMPLETELY FILL THE JOINTS.

THE CONTRACTOR SHALL BRING ALL MANHOLE COVERS, SIGNAGE POLES, JUNCTION PULL BOXES, AND DRAINAGE INLETS TO THE FINISH GRADE OF THE PAVING STONE AS DIRECTED BY THE ENGINEER.

SURPLUS MATERIAL SHALL BE LEFT ON THE SURFACE DURING CONSTRUCTION TIME TO INSURE COMPLETE FILLING OF JOINTS DURING INITIAL USE. UPON COMPLETION OF ALL CONSTRUCTION WORK THE PAVER SURFACE SHALL BE SWEPT AND CLEANED OF ALL EXCESS SOIL, FOREIGN MATERIAL, AND/OR STAINS.

---ITEM 5237 RIDE QUALITY FOR PAVEMENT SURFACES---

SURFACE TEST TY B SHALL BE REQUIRED.

---ITEM 8101 [redacted]: FIBER OPTIC CABLE---

PRIOR TO STARTING ANY WORK INVOLVING THE EXISTING FIBER OPTIC CABLE, THE CONTRACTOR SHALL COMPLETELY IDENTIFY THE FIBER STRANDS CURRENTLY IN USE AND SHALL TAKE ALL PRECAUTIONS NECESSARY TO PREVENT DAMAGE OR INTERRUPTION TO THESE FIBER STRANDS. ALL EQUIPMENT, MATERIAL AND LABOR NECESSARY FOR IDENTIFICATION AND PROTECTION OF THE UTILIZED FIBERS SHALL BE FURNISHED BY THE CONTRACTOR.

ALL MATERIAL AND SERVICES NECESSARY FOR CONNECTION OF NEW EQUIPMENT TO THE FIBER OPTIC CABLE SHALL BE FURNISHED BY THE CONTRACTOR AND SHALL BE CONSIDERED INCIDENTAL TO THE VARIOUS BID ITEMS.

THE CONTRACTOR SHALL DOCUMENT ALL CHANGES IN THE FIBER OPTIC CABLE UTILIZATION AND SHALL PROVIDE DETAILED FIBER OPTIC CABLE UTILIZATION DIAGRAMS TO THE ENGINEER UPON COMPLETION OF ALL CHANGES.

THE SINGLE MODE FIBER OPTIC CABLE TO BE INSTALLED ON THIS PROJECT SHALL BE TESTED AT A WAVELENGTH OF 1300 NANOMETERS AND 1550 NANOMETERS.

THE POST TERMINATION TEST SHALL BE PERFORMED AS THE FIBER OPTIC CABLE IS BEING TERMINATED OR FUSION SPLICED. THE POST TERMINATION TEST CHECKS FOR ATTENTUATION AND PROBLEMS AT THE FUSION OR TERMINATION POINT

GENERAL NOTES AND SPECIFICATION DATA--

---ITEM 8101 [redacted]: FIBER OPTIC CABLE---, CONT'D
AND THEN OVERALL FIBER CABLE SEGMENT. IT ALSO DTERMINES WHETHER THE ATTENUATION AND QUALITY OF THE TERMINATION MEETS THE FIBER OPTIC SPECIFICATION. IF THE TERMINATION DOES NOT MEET THE SPECIFICATION, THEN THE TERMINATION IS REPEATED UNTIL IT MEETS THE SPECIFICATION.ONCE THE TERMINATING IS ACCEPTABLE, THE FIBER SEGMENT SHALL BE TESTED FOR ATTENTUATION AND ANOMALIES. ONCE THE FIBER SEGMENT IS ACCEPTABLE, THE TEST RESULTS ARE DOCUMENTED AND FORWARDED TO THE ENGINEER.

WHEN TESTING THE FUSION SPLICES ON PIGTIALS, THE CONTRACTORS SHALL USE A LAUNCH REEL OF THE SAME TYPE OF FIBER AS THE CABLE AND PIGTAIL BEING SPLICED. THIS IS NECESSARY TO EXTEND OUT THE TRACE SO THAT THE FUSION SPLICE CAN BE SEEN AND DOCUMENTED PROPERLY.

---ITEM 8063 [redacted]: COMMUNICATION CABLE---

THE CONTRACTOR SHALL JELLY FILL EACH END OF THE COMMUNICATION CABLE THAT IS EXPOSED TO ELEMENTS DURING STORAGE OR AFTER INSTALLATION TO PREVENT WATER INTRUSION.

THE CONTRACTOR SHALL BE RESPONSIBLE FOR THE SIGNAL CARRYING CAPABILITY AND PERFORMANCE OF THE CABLE. EACH WIRE SHALL BE INSTALLED WITH A LIGHTNING PROTECTION DEVICE UNLESS OTHERWISE NOTED.

THE 6 PAIR AND 25 PAIR COMMUNICATIONS CABLE SHOWN IN THE PLANS TO BE INSTALLED WITH THE FIBER OPTIC CABLE SHALL BE TERMINATED AT EACH COMMUNICATIONS HUB BUILDING/CABINET. THE CONTRACTOR SHALL INSTALL A 1/4 INCH PHONE JACK IN EACH COMMUNICATIONS HUB BUILDING/CABINET. THESE PHONE JACKS SHALL BE CONNECTED TO THE SIX PAIR COMMUNICATIONS CABLE IN SUCH A MANNER AS TO PROVIDE A CONTINUOUS "PARTY LINE" VOICE COMMUNICATIONS CIRCUIT THROUGHOUT EACH COMMUNICATIONS HUB BUILDING/CABINET ON THE PROJECT. THIS WORK WILL NOT BE PAID FOR DIRECTLY BUT SHALL BE CONSIDERED INCIDENTAL TO THE VARIOUS BID ITEMS.

---ITEM 8079 [redacted]: COMMUNICATIONS HUB BUILDING---

OVERALL FLOOR DIMENSIONS OF THE COMMUNICATIONS HUB BUILDING SHALL BE 6' BY 8'.

THE LOAD SIZE OF ALL CIRCUIT BREAKERS SHALL BE PROTECTED BY AN EDCO MODEL SHP-300-10S, HESCO HES 300-10, OR EQUIVALENT THREE TERMINAL LIGHTNING ARRESTOR.

GENERAL NOTES AND SPECIFICATION DATA--

---ITEM 8079 [redacted]: COMMUNICATIONS HUB BUILDING---, CONT'D
THE DISTRIBUTION PANEL SHALL BE SQUARE D QO SERIES, GE THQ SERIES, OR EQUIVALENT.

---ITEM 8080 [redacted]: DATA FIBER OPTIC TRANSCEIVER---

THE FIBER OPTIC BYPASS SWITCHES USED ON THIS PROJECT SHALL NOT BE INTEGRAL TO THE DATA FIBER OPTIC TRANSCEIVER, EACH COMMUNICATION HUB SHALL HAVE ALL FIBER OPTIC BYPASS SWITCHES MOUNTED IN ONE ELECTRONIC ENCLOSURE. THE FIBER OPTIC BYPASS SWITCHES SHALL BE INTERCONNECTED TO THE DATA FIBER OPTIC TRANSCEIVERS UTILIZING FIBER OPTIC JUMPERS.

---NETWORK MANAGEMENT SOFTWARE SYSTEM---

THE NETWORK MANAGEMENT SOFTWARE SYSTEM DIAGNOSTIC UNIT SHALL CONTAIN A PENTIUM MICROPROCESSOR.

---ITEM 6959: VIDEO IMAGING VEHICLE DETECTION SYSTEM---

THE VIVDS CAMERAS, PROCESSOR UNITS AND SOFTWARE SHALL BE ECONOLITE AUTOSCOPE SYSTEM OR COMPATIBLE WITH THE EXISTING ECONOLITE AUTOSCOPE SYSTEM.

---ITEM 8108 [redacted] SYSTEM SUPPORT EQUIPMENT---

THE CONTRACTOR SHALL FURNISH THE FOLLOWING NUMBER OF SYSTEM SUPPORT EQUIPMENT ITEMS:

DESCRIPTION	QUANTITY
VIDEO FIBER OPTIC TRANSMITTER	1
VIDEO FIBER OPTIC RECEIVER	1
DROP/INSERT MULDEM 24 SLOT CHASSIS W/SERVICE CARDS	1
DROP/INSERT MULDEM SUBSTRATE CARD	1
DROP /INSERT MULDEM VOICE CARD	1
DROP/INSERT MULDEM (COMPLETE SET OF SERVICE CARDS NOT LIMITED TO: LIU CARD, CCU CARD, UPPER/LOWER STROBE CARD, AC SWITCHER POWER SUPPLY CARD)	1
CCTV FIELD EQUIPMENT LESS POLE (POLE CABINET & CAMERA - COMPLETE SET TO INCLUDE CAMERA, ENCLOSURE, ZOOM LENS, SUNSHADE, VISORS, PAN/TILT UNIT & CAMERA RECEIVER CONTROLLER)	1
LIMITED DISTANCE ASYNCHRNONOUS MODEM (STAND ALONE)	1
SURGE SUPPRESSORS 6 PR	1

GENERAL NOTES AND SPECIFICATION DATA--

---ITEM 8108 [redacted]: SYSTEM SUPPORT EQUIPMENT---, CONT'D
CCTV SURGE SUPPRESSORS PANEL COMPLETE (VIDEO, 115 VAC, SIGNAL) 1

TOOLS AND TEST SUPPORT EQUIPMENT

1. FIBER OPTIC TOOL KIT FOR PREPPING AND TERMINATING FIBER OPTIC CABLE THAT INCLUDES:
   - 1 DEG CLEAVER
   - RED NO-NIK
   - MILLER STRIPER OR EQUIVALENT
   - DIAMOND SCRIBE
   - JACKET STRIPPER
   - BUFFER TUBE STRIPPER
   - PLIERS
   - SCREWDRIVER SET
   - INDEX MATCHING GEL
   - CANNED AIR
   - ALCOHOL, COTTON SWABS
   - KIM WIPES OR EQUIVALENT
   - UTILITY BLADE
   - ELECTRICIAN'S SCISSORS
   - TWEEZERS
   - BLACK ELECTRICAL TAPE
   - STORAGE BOX
   - TAPE MEASURE
   - FC CONTINUITY TESTER AND FLASHLIGHT
   - PIANO WIRE CLEANER FOR ELASTOMERIC COUPLER OR COUPLING SLEEVE
   - CABLE MARKERS
   - CABLE TIES
   - RED, BLACK & GREEN SHRINK TUBING
   - FUSION SPLICE SLEEVES (20 MINIMUM)

2. INSPECTION MICROSCOPE FOR FIBER OPTIC CONNECTOR 1
   - 4 ADAPTERS ROTATE UP TO 90 DEG & LOCKED
   - 4X, 10X, 20X & 40X EYEPIECES WITH 800 POWER
   - 2 "D" SIZE CELLS WITH A 1.2 WATT LAMP
   - MAXIMUM WEIGHT IS 2.5 LBS.

3. SINGLEMODE LIGHT PACK LIGHT SOURCE & POWER METER 1
   - SINGLEMODE
   - 1300 & 1550 NM OPERATION, LOW BATTERY INDICATION
   - DETECTOR DYNAMIC RANGE +5 TO 50 DBM
   - RESOLUTION TO 0.1DB
   - BOTH OPTICAL POWER METER AND LIGHT SOURCE DIMENSIONS

GENERAL NOTES AND SPECIFICATION DATA--

---ITEM 8108 [redacted]: SYSTEM SUPPORT EQUIPMENT---, CONT'D
   - 8.5" X 8" X 3.5" WITH A WEIGHT OF 1.7 LBS.

4. OPTICAL TIME DOMAIN REFLECTOMETER 1
   - SINGLEMODE 1550/1300 NM OPERATION
   - FIBER SCAN RESOLUTION IN GPIB MODE:
     8KM, 16KM, 32KM, 64KM, 128KM, 256KM & AUTO MODE
     16M, 8M, 4M, 1M, & 0.5 METER
   - SINGLE MODE MODULE PLUG-IN REQUIRED WITH MAINFRAME
   - MASS MEMORY STORAGE ON HARD DISK
   - DISKETTE STORAGE
   - THERMAL PAPER DIGITAL PRINTER-INTEGRAL TO THE OTDR
   - FRONT PANEL CONTROLS FOR:
     CURSER A, CURSER B
     VERTICAL EXPANSION
     HORIZONTAL EXPANSION
     DISPLAY FROM
     PULSE WIDTH SELECTION
     LOSS MODE
     WAVE LENGTH
     TEST
   - VGA COLOR MONITOR-INTEGRAL TO THE OTDR 640X480 PIXELS
   - ON/OFF BUTTON IN FRONT OF PANEL
   - FLOPPY DISK DRIVE
   - SINGLE MODE PLUG IN CAPABILITY IN FRONT OF PANEL
   - FIBER ANALYSIS SOFTWARE

5. TELECOM TEST SET, CHESIVALE ELECTRONICS UTS2, TTS-3B OR EQUIVALENT 1
   - TONE PULSE DIALING
   - TALK MONITOR SWITCH
   - POLARITY CHECK
   - LAST NUMBER REDIAL
   - REDIAL 10X21 DIGIT STORES UP TO 10 YEARS
   - WITHOUT BATTERY
   - BUILT IN RINGER
   - ADJUSTABLE LOUDSPEAKER

6. FIBER OPTIC FUSION SPLICER 1
   GENERAL DESCRIPTION:
   - FULLY AUTOMATIC
   - PORTABLE
   - SELD-CONTAINED
   - CAPACITY BETWEEN 1 TO 10 FIBERS, SINGULARLY OR SIMULTANEOUSLY PHYSICAL
   - DIMENSIONS OF NOT GREATER THAN 12"X12"X12" (W, H, D)

GENERAL NOTES AND SPECIFICATION DATA--

---ITEM 8108 [redacted]: SYSTEM SUPPORT EQUIPMENT---, CONT'D

- NOT MORE THAN 25 LBS
- AUTOMATIC COMPENSATION FOR ALTITUDE FROM SEALEVEL TO 9000' ASL WITHOUT MANUAL COMPENSATION
- 3" LIQUID CRYSTAL DISPLAY FOR OPERATOR PROMPTS AND ESTIMATED SPLICE CHARACTERISTICS
- ELECTRICAL
- POWER INPUT
- 120 VAC +/- 10% 50/60 HZ *
- 12 VDC +/- 15% *PEAKER
  * WITHOUT DEGRADATION IN PERFORMANCE
- OPTICAL CAPACITY, 1-10 FIBERS, SINGULARLY OR SIMULTANEOUSLY
- SINGLE MODE FIBER OPTIC CABLE
- AVERAGE SPLICE LOSS < 0.08 DB
- AVERAGE SPLICE RETURN LOSS > 60 DB
- SPLICE TIME: LESS THAN 2 MINUTES
- LESS THAN 2 MINUTES60 HZ *

ALL ITEMS REQUIRED TO COMPLETE A FULLY FUNCTIONAL AND OPERATIONAL FIBER OPTIC FUSION SPLICER. THIS INCLUDES, BUT IS NOT LIMITED TO, ALL DURABLE ITEMS AND EXPENDABLE ITEMS REQUIRED FOR 400 FIBER SPLICES.

---ITEM 8063 [redacted]: COMMUNICATION CABLE---

SLACK SHALL BE PROVIDED ON ALL CABLES FOR PROPER DRESSING AND TERMINATION TO CABINETS AS DIRECTED BY THE ENGINEER.

---ITEM 8101 [redacted]: FIBER OPTIC CABLE---

NO FIBER OPTIC SPLICES WILL BE ALLOWED AT LOCATIONS OTHER THAN AT THE COMMUNICATIONS HUB CABINETS/BUILDING IN ACCORDANCE WITH THE PLANS OR AS DIRECTED BY THE ENGINEER.

THE CONTRACTOR SHALL PREPARE THE EXISTING CONDUIT IN WHICH THE FIBER OPTIC CABLE AND OTHER SIGNAL CONDUCTORS WILL BE PLACED AND WILL BE PAID FOR AS INCIDENTAL TO THE INSTALLATION OF FIBER OPTIC CABLE.

APPROPRIATE SLACK SHALL BE PROVIDED FOR TERMINATION ON ALL CABINETS, BUILDING, AND CCTV POLES. SLACK BETWEEN 15-20 FEET MUST BE PROVIDED FOR PROPER CABLE DRESSING AND TERMINATION.

A SPARE LOOP OF BETWEEN 20-30 FEET SHALL BE PROVIDED FOR EACH EXISTING LCU CABINET AND SHALL BE STORED IN THE ADJACENT GROUND BOX.

GENERAL NOTES AND SPECIFICATION DATA--

---ITEM 8101 [redacted]: FIBER OPTIC CABLE---, CONT'D

---ITEM 8070 [redacted]: FTM LANE CONTROL SIGNAL FIELD EQUIPMENT---

TALL BRACKETS AND UNISTRUT MATERIAL THAT MUST BE INSTALLED ON THE PROPOSED SIGNAGE FOR MOUNTING ANY LCS HEAD WILL BE PAID INCIDENTAL TO THIS BID ITEM.

TXDOT SHALL FURNISH PAINT SPECIFICATIONS TO THE CONTRACTOR AS NEEDED TO COMPLY WITH REQUIREMENTS UNDER THIS ITEM.

---ITEM 8040 [redacted]: SPREAD SPECTRUM RADIO---

THIS EQUIPMENT MUST BE COMPATIBLE WITH THE EXISTING SPREAD SPECTRUM RADIOS INSTALLED ON IH 35, CYLINK 19.2.

ALL PROPOSED LIMITED DISTANCE MODEMS SHALL BE PROVIDED WITH AN RS-232 CABLE ASSEMBLY.

---ITEM 8067 [redacted]: LIMITED DISTANCE MODEM (LDM)---

THE CONTRACTOR FURNISHED MODEMS SHALL BE COMPATIBLE WITH THE EXISTING MODEMS PROVIDED FOR BOTH LP 20 AND FM 1472.

ALL PROPOSED LIMITED DISTANCE MODEMS SHALL BE PROVIDED WITH AN RS-232 CABLE ASSEMBLY.

---ITEM 8064 [redacted]: ELECTRONIC COMPONENTS---

ADHESIVE-BACKED CABLE RESTRAINTS SHALL NOT BE ALLOWED.

---ITEM 8076 [redacted]: COMMUNICATIONS HUB CABINET---

A SINGLE POLE 20 AMP BREAKER SHALL BE INSTALLED AS REQUIRED AND INDICATED ON THE PLANS. ALL MATERIAL AND LABOR SHALL BE CONSIDERED SUBSIDIARY TO THIS BID ITEM.

---ITEM 8069 [redacted]: CCTV CENTRAL EQUIPMENT---

F.R. DIV.6	TEXAS	NH 99(462)	SHEET 38C1
WEBB COUNTY		HWY IH 35	CONT 0018-6-131

GENERAL NOTES AND SPECIFICATION DATA--

---ITEM 8069: CCTV CENTRAL EQUIPMENT---, CONT'D
THE CONTRACTOR SHALL VERIFY THE EQUIPMENT COMPATIBILITY WITH TXDOT, LAREDO. THE CONTRACTOR SHALL PROVIDE A PAN-TILT-ZOOM (PTZ) KEYBOARD COMPATIBLE WITH THE VIDEO SWITCHER. PAYMENT FOR THIS KEYBOARD SHALL BE SUBSIDIARY TO THIS BID ITEM.

ESTIMATE SUMMARY

				WEBB COUNTY		WEBB COUNTY		WEBB COUNTY		ALT	ITEM-CODE			DESCRIPTION	UNIT	TOTAL	
				IM 35-1 (65)		C 86-14-23		NH 99 (462)									
				18-5-57 ROADWAY		86-14-23 ALL BID ITEMS		18-6-131 ALL BID ITEMS									
EST.	FINAL	EST.	FINAL	EST.	FINAL	EST.	FINAL	EST.	FINAL		ITEM NO	DESC CODE	SP NO			EST.	FINAL
				14.830		229.480		287.090			100	0502		PREP ROW	STA	531.400	0.00
								2481.980			104	0503		REMOV CONC (RIPRAP)	SY	2481.980	2,716.090
						73.240		178.700			104	0509		REMOV CONC (SDWLK)	SY	251.940	1,613.880
				563.600		2314.000					104	0513		REMOV CONC (CURB & GUTTER)	LF	2877.600	3420.600
						215.370		2739.410			104	0529		REMOV CONC (SHLDR DRAIN)	SY	2954.780	2,954.780
				5532.560		40493.260		143509.060			105	0504		RMV STB BS AND/OR ASH PAV (CL 2) VAR DEP	SY	189534.880	221,009.760
				2056.000		421542.000		554589.000			110	0501		EXCAVATION (RDWY)	CY	978187.000	1,019,083.410
						840.800		1461.000			110	0502		EXCAVATION (CHAN)	CY	2301.800	2,969.310
						108018.000		33280.000			132	0509		EMBANK (DENS CONT) (TY C) (CL 3)	CY	141298.000	171,058.93
				5.530		79.270		53.490			164	0507	002	STND SEED FOR COOL SEASON TMP ERSN CNT	AC	138.290	15.763
				5.530		79.270		53.490			164	0508	002	STND SEED FOR WARM SEASON TMP ERSN CNT	AC	138.290	19.083
				1.920		88.050		59.440			164	0554	002	CELL FIB SEED (PERM) (RURAL) (CLAY)	AC	149.410	103.178
				1.380		21.290		14.400			166	0509		FERTILIZER (13-13-13)	TON	37.070	20.120
				208.510		9361.880		6452.990			168	0501		VEGETATIVE WATERING	MG	16023.380	2,543.900
				771.060		6201.060		4072.500			168	0502		VEG WATERING (TEMP EROSN CONTROL)	MG	11044.620	87.600
								1.000			170	0501		IRRIGATION SYSTEM	LS	1.000	1.000
								26.600			180	0501		WILDFLOWER SEEDING	AC	26.600	26.000
								4.000			192	0809		LIVE OAK (MIN 3" CAL) (CNTR)	EA	4.000	4.000
								12.000			193	0501		PLANT MAINTENANCE	MO	12.000	3.000
								2.000			193	0502		PLANT REPLACEMENT	EA	2.000	0.000
								12.000			193	0504		IRRIGAT SYS OPER AND MAINT	MO	12.000	3.000
				9.000		127.000		246.000			204	0503		SPRINKLING (DUST CONTROL)	MG	382.000	8,127.000
				6393.420		94770.400		185965.450			260	0510	001	LIME TREAT SUBGR (DC) (8 IN)	SY	287129.270	206,889.130
				57.550		874.200		1693.340			260	0514	001	LIME (TY A SLURRY) OR (TY B)	TON	2625.090	1860.895
						1893.230		1744.640			276	0628		CEM TRT BS (STR-0) (TY D1 OR D2) (GR6) VD	CY	3637.870	178.140
				1271.000		17970.000		36172.000			314	0502		EMULS ASPH (BS OR SUBGR TREAT) (MS-2)	GAL	55413.000	32,297.100
						64328.140					354	0507		PLANE ASPH CONC PAV (1")	SY	64328.140	76591.720
						56985.300		111764.010			360	0507	028	CONC PAV (CONT REINF HY STL) (12")	SY	168749.310	163,233.314
						24717.200		33.700			400	0501		STRUCT EXCAV	CY	24750.900	41.200
								4020.000			400	0502		STRUCT EXCAV (BRIDGE)	CY	4020.000	4,020.000
						64.800		359.100			400	0503		STRUCT EXCAV (CULV SMALL)	CY	423.900	448.900
								45.000			400	0504		STRUCT EXCAV (CULV LARGE)	CY	45.000	369.100
						280.800		417.900			400	0507		CEM STABIL BKFL	CY	698.700	488.500
						18571.200		21172.000			400	0513		STRUC EXCAV (SEWER)	CY	39743.200	41,128.120
						3617.700		4174.300			400	0514		CEM STAB BKFL (SEWER)	CY	7792.000	5,619.833
						6519.000		8694.000			402	0501		TRENCH EXCAV PROTECTION	LF	15213.000	15,853.000
								31522.000			403	0501		TEMPORARY SPL SHORING	SF	31522.000	31,522.000
								268.000			416	0503	001	DRILL SHAFT (18 ")	LF	268.000	160.000
								1130.000			416	0504	001	DRILL SHAFT (30 IN)	LF	1130.000	1,377.560
						66.000		664.000			416	0506	001	DRILL SHAFT (36 IN)	LF	730.000	744.500
								971.000			416	0507	001	DRILL SHAFT (42 IN)	LF	971.000	971.000
								104.000			416	0508	001	DRILL SHAFT (48 IN)	LF	104.000	0.000
						1040.000		3896.000			416	0509	001	DRILL SHAFT (54 IN)	LF	4936.000	4,862.400
								504.000			416	0510	001	DRILL SHAFT (60 IN)	LF	504.000	504.000
						56.000					416	0516		DRILL SHAFT (30 IN) (SIGN MTS)	LF	56.000	56.000
								64.000			416	0516	001	DRILL SHAFT (30 IN) (SIGN MTS)	LF	64.000	64.000
						126.000		64.000			416	0517	001	DRILL SHAFT (36 IN) (SIGN MTS)	LF	190.000	356.000
						18.500					416	0519	001	DRILL SHAFT (48 IN) (SIGN MTS)	LF	18.500	70.500
						864.000		352.000			416	0524	001	DRILL SHAFT (60 IN) (HIGH MAST POLE)	LF	1216.000	1248.000
						250.000		228.200			420	0513	009	CL C CONC (ABUT)	CY	478.200	478.200

ESTIMATE & QUANTITY SHEET

REV. 6-25-99

STATE DIST. NO	COUNTY	PROJECT NO.	SHEET NO.
22	WEBB	NH 99 (462), ETC.	39

ESTIMATE SUMMARY

				WEBB COUNTY		WEBB COUNTY		WEBB COUNTY		ALT	ITEM-CODE			DESCRIPTION	UNIT	TOTAL	
				IM 35-1 (65)		C 86-14-23		NH 99 (462)									
				18-5-57 ROADWAY		86-14-23 ALL BID ITEMS		18-6-131 ALL BID ITEMS									
EST.	FINAL	EST.	FINAL	EST.	FINAL	EST.	FINAL	EST.	FINAL		ITEM NO	DESC CODE	SP NO			EST.	FINAL
								8726.900			420	0514	009	CL C CONC (BENT)	CY	8726.900	8,896.540
								2582.000			420	0515	009	CL C CONC (FOOTING)	CY	2582.000	2,582.000
								136.500			420	0536	009	CL F CONC (BENT)	CY	136.500	136.500
				2.000		6.000		7.000			420	0569	009	CL A CONC (CURB OUTLET) (TY I)	EA	15.000	19.000
						45.800					420	0640	009	CL F CONC (CURB)	CY	45.800	0.000
								67360.000			422	0501		REINF CONC SLAB	SF	67360.000	67,360.000
								272767.000			422	0505		REINF CONC SLAB (CL S)	SF	272767.000	272,766.995
						5025.000					422	0506		REINF CONC SLAB (CL F)	SF	5025.000	5,117.000
						4810.400		39357.000			423	0501		RETAINING WALL (MSE)	SF	44167.400	39,357.000
						24018.000		17226.000			423	0511		RETAINING WALL (SOIL NAILED)	SF	41244.000	59,303.000
								9233.120			425	0503	001	PRESTR CONC BEAM (TY C)	LF	9233.120	9,233.000
								23481.740			425	0507	001	PRESTR CONC BEAM (TY IV)	LF	23481.740	23,481.740
								34497.000			428	0501	002	CONC SURF TREAT	SY	34497.000	36,626.260
						312.360		795.180			432	0524		RIPRAP (CONC) (CL B) (4 IN)	CY	1107.540	2,971.291
						16.500					432	0529		RIPRAP (CONC) (CL B) (5 IN)	CY	16.500	7.200
								16.000			434	0505	001	SLIDING ELASTOMERIC BEAR (SE 5)	EA	16.000	16.000
								4.000			434	0506	001	SLIDING ELASTOMERIC BEAR (SE 6)	EA	4.000	4.000
								16.000			434	0507	001	SLIDING ELASTOMERIC BEAR (SE 7)	EA	16.000	16.000
								12.000			434	0514	001	SLIDING ELASTOMERIC BEAR (SE 8)	EA	12.000	12.000
								12.000			435	0513	001	ELASTOMERIC BEAR (IF 6)	EA	12.000	12.000
								16.000			435	0514	001	ELASTOMERIC BEAR (IF 7)	EA	16.000	16.000
								16.000			435	0522	001	ELASTOMERIC BEAR (IF 4A)	EA	16.000	16.000
						620000.000		5968775.000			442	0502	003	STRUCT STL-HS	LB	6588775.000	6,588,775.000
						59814.570		55539.170			442	0515	003	STR STL-HYC (WF TERM ANCH)	LB	115353.740	115,353.740
						59400.000					442	0532	003	STRUCT STL-HS (SHOES)	LB	59400.000	56,0560.000
						2816.000					442	0533	003	STRUCT STL-HYC (STUD CONN)	LB	2816.000	2,816.000
								2.000			444	0501		BRIDGE PROTECT ASSEM	EA	2.000	2.000
						4.000		3.000			444	0505		SIGN & BRACKET	EA	7.000	5.000
						4602.950		21287.220			450	0526		RAIL (TY SSTR)	LF	25890.170	0.000
						691.000					450	0694		RAIL (TY PR1) (MOD)	LF	691.000	556.700
						2730.130		10539.420			450	0739		RAIL (SSTR) W/DRAIN SLOTS	LF	13269.550	0.000
								1111.000			454	0503		SEALED EXPANSION JOINTS (4 IN)	LF	1111.000	1,111.000
								105.000			454	0504		SEALED EXPANSION JOINTS (5 IN)	LF	105.000	105.000
						620.000					458	0513		WATRPF (TY RR-2) (MOD)	SY	620.000	620.000
						140.000					458	0514		WATRPF (TY 1, 3, 4 OR 6)	SY	140.000	140.000
								278.000			462	0507	003	CONC BOX CULV (5 FT X 3 FT)	LF	278.000	278.000
								77.000			462	0508	003	CONC BOX CULV (5 FT X 4 FT)	LF	77.000	77.000
						384.000					462	0514	003	CONC BOX CULV (6 FT X 4 FT)	LF	384.000	384.000
						123.000					462	0522	003	CONC BOX CULV (8 FT X 4 FT)	LF	123.000	123.000
								81.000			462	0524	003	CONC BOX CULV (8 FT X 6 FT)	LF	81.000	81.000
								182.000			462	0555	003	CONC BOX SEWER (7 FT X 4 FT)	LF	182.000	395.506
								270.000			462	0557	003	CONC BOX SEWER (7 FT X 6 FT)	LF	270.000	0.000
								1196.000			462	0560	003	CONC BOX SEWER (8 FT X 5 FT)	LF	1196.000	1,196.000
						728.000		366.000			462	0565	003	CONC BOX SEWER (9 FT X 6 FT)	LF	1094.000	1,094.000
						18.000					464	0505	003	RC PIPE (CL III) (24 ")	LF	18.000	70.500
								480.000			464	0519	003	RC PIPE (CL IV) (18 IN)	LF	480.000	600.000
								225.000			464	0522	003	RC PIPE (CL IV) (36 IN)	LF	225.000	225.000
						3114.000		4992.000			464	0561	003	RC PIPE (SEWER) (CL III) (24 IN)	LF	8106.000	8,990.500
						535.000		2286.000			464	0563	003	RC PIPE (SEWER) (CL III) (30 IN)	LF	2821.000	3,071.000
						184.000		878.000			464	0565	003	RC PIPE (SEWER) (CL III) (36 IN)	LF	1062.000	1,062.000

ESTIMATE & QUANTITY SHEET

REV. 6-25-99

STATE DIST. NO.	COUNTY	PROJECT NO.	SHEET NO.
22	WEBB	NH 99 (462), ETC.	39A

ESTIMATE SUMMARY

				WEBB COUNTY		WEBB COUNTY		WEBB COUNTY		ALT	ITEM-CODE			DESCRIPTION	UNIT	TOTAL	
				IM 35-1 (65)		C 86-14-23		NH 99 (462)									
				18-5-57 ROADWAY		86-14-23 ALL BID ITEMS		18-6-131 ALL BID ITEMS									
EST.	FINAL	EST.	FINAL	EST.	FINAL	EST.	FINAL	EST.	FINAL		ITEM NO	DESC CODE	SP NO			EST.	FINAL
						936.000		487.000			464	0566	003	RC PIPE (SEWER) (CL III) (42 IN)	LF	1423.000	1,048.080
						1126.000		260.000			464	0567	003	RC PIPE (SEWER) (CL III) (48 IN)	LF	1386.000	1,796.000
						45.000		295.000			464	0575	003	RC PIPE (SEWER) (CL IV) (18 IN)	LF	340.000	340.000
						736.000		565.000			464	0576	003	RC PIPE (SEWER) (CL IV) (24 IN)	LF	1301.000	1,301.000
						87.000					464	0578	003	RC PIPE (SEWER) (CL IV) (36 IN)	LF	87.000	87.000
								60.000			464	0579	003	RC PIPE (SEWER) (CL IV) (42 IN)	LF	60.000	60.000
						301.000					464	0580	003	RC PIPE (SEWER) (CL IV) (48 IN)	LF	301.000	301.000
						4.000		18.000			465	0501		INLET (COMPL) (TY A)	EA	22.000	28.000
						25.000		29.000			465	0503		INLET (COMPL) (TY C)	EA	54.000	54.000
						6.000		11.000			465	0510		MANH (COMPL) (TY A)	EA	17.000	17.000
						27.000		21.000			465	0514		INLET EXT (TY C)	EA	48.000	48.000
						7.000		16.000			465	0517		INLET (COMPL) (TY AD)	EA	23.000	23.000
						4.000		8.000			465	0518		INLET (COMPL) (TY AAD)	EA	12.000	12.000
								1.000			465	0545		INLET (COMPL) (TY H) (MOD)	EA	1.000	1.000
						4.000		1.000			465	0551		INLET (COMPL) (TY C-1)	EA	5.000	5.000
						4.000		12.000			465	0559		MANH (COMPL) (TY M) (MOD)	EA	16.000	16.000
								4.000			465	0987		INLET (COMPL) (TY ADR)	EA	4.000	4.000
						6.000					465	3512		INLET (COMPL) (TY AZR)	EA	6.000	6.000
						1.000					465	3578		INLET EXT (TY C-1)	EA	1.000	1.000
						8.000					465	3579		INLET (COMPL) (CURB) (SPL)	EA	8.000	8.000
								1.000			466	0522	001	WINGWALL (PW-30) (H= 3 FT)	EA	1.000	1.000
						2.000					466	0523	001	WINGWALL (PW-30) (H= 4 FT)	EA	2.000	1.000
								1.000			466	0586	001	WINGWALL (MCW-P) (H= 4 FT)	EA	1.000	3.000
								1.000			466	0588	001	WINGWALL (MCW-P) (H= 6 FT)	EA	1.000	1.000
						2.000					466	0604	001	WINGWALL (MCW-P-30) (H= 4 FT)	EA	2.000	2.000
								1.000			466	0612	001	WINGWALL (MCW-P-45) (H= 3 FT)	EA	1.000	1.000
								4.000			467	0511	003	SAFETY END TREAT (TY II) (18 IN) (RCP)	EA	4.000	8.000
						3.000					467	0512	003	SAFETY END TREAT (TY II) (24 IN) (RCP)	EA	3.000	3.000
								3.000			467	0697	003	SAFE END TRT (TY II) (36 ") (RCP) (3: 1) (C)	EA	3.000	3.000
						1.000					479	0502		ADJ INLETS	EA	1.000	1.000
						200.000					481	0514		PVC PIPE (SCH 40) (6 IN)	LF	200.000	200.000
						150.000					481	0515		PVC PIPE (SCH 40) (8 IN)	LF	150.000	150.000
								3.000			496	0501		REMOV OLD STR (LARGE)	EA	3.000	3.000
						596.000		2137.000			496	0504		REMOV OLD STR (PIPE)	LF	2733.000	2,921.000
								2.000			496	0517		REMOV OLD STR (SMALL) (INLET)	EA	2.000	8.000
						1.000					496	0518		REMOV OLD STR (SMALL) (MANHOLE)	EA	1.000	1.000
						4.000		21.000			496	0529		REMOVE OLD STRUCTURE (SET)	EA	25.000	25.000
								2.000			496	0530		REMOVE OLD STRUCTURE (WINGWALL)	EA	2.000	2.000
								1.000			500	0501		MOBILIZATION	LS	1.000	1.000
								36.000			502	0501	018	BARRICADES, SIGNS AND TRAF HANDLE	MO	36.000	74.000
				14.130		21.090		25.760			508	0501		CONSTRUCT DETOURS (CL 1)	STA	60.980	167.027
						340.000		12985.000			512	0501	001	PORT CONC TRAF BAR (FURN & INSTL)	LF	13325.000	19,050.000
						1740.000		11860.000			512	0502	001	PORT CONC TRAF BAR (STKPL, INSTL & RETRN)	LF	13600.000	32,450.000
						1070.000		27860.000			512	0503	001	PORT CONC TRAF BAR (MOVE & RESET)	LF	28930.000	58,785.000
								13120.000			512	0504	001	PORT CONC TRAF BAR (REMOVE)	LF	13120.000	46,320.000
						1972.210		1545.000			514	0517		PERM CTB (SNGLE SLOPE) (TY 2) (H=42")	LF	3517.210	1,095.000
								2506.560			514	0550		PRM CNC TRF BR SGL SLP (TY 2) W/DRN SLTS	LF	2506.560	1,305.000
								134.000			529	0501		CONC CURB (TY 1)	LF	134.000	130.750
						262.470					529	0505		CONC CURB (DOWEL) (6 ")	LF	262.470	2,131.000
				1547.530		17157.450		15869.920			529	0510		CONC CURB (TY 2) (MONO)	LF	34574.900	36,699.000

ESTIMATE & QUANTITY SHEET

REV. 6-25-99

STATE DIST. NO.	COUNTY	PROJECT NO.	SHEET NO.
22	WEBB	NH 99 (462), ETC.	39B

ESTIMATE SUMMARY

				WEBB COUNTY		WEBB COUNTY		WEBB COUNTY		ALT.	ITEM-CODE			DESCRIPTION	UNIT	TOTAL	
				IM 35-1 (65)		C 86-14-23		NH 99 (462)									
				18-5-57 ROADWAY		86-14-23 ALL BID ITEMS		18-6-131 ALL BID ITEMS									
EST.	FINAL	EST.	FINAL	EST.	FINAL	EST.	FINAL	EST.	FINAL		ITEM NO	DESC CODE	SP NO			EST.	FINAL
								1820.000			529	0525		CONC CURB (TY 2)	LF	1820.000	0.000
						10206.240		15324.000			529	0529		CONC CURB & GUTTER (TY II) (6 IN)	LF	25530.240	25,530.290
						9487.750		203.820			531	0507		CONCRETE SIDEWALK (4 ")	SY	9691.570	11,213.690
						2.000					531	0541		CONC SIDEWALK (WHEELCHAIR RAMP) (TY A)	EA	2.000	0.000
						24.000		24.000			531	0542		CONC SIDEWALK (WHEELCHAIR RAMP) (TY B)	EA	48.000	7.000
						5.000		20.000			540	0505	016	TERM ANCHOR SECT (12 GA)	EA	25.000	36.000
						1200.000		2365.000			540	0506	016	MTL BEAM GD FEN (12 GA) (TIM POST)	LF	3565.000	3,850.000
								1582.320			542	0501		REMOV METAL BEAM GUARD FENCE	LF	1582.320	2,477.670
						3344.620					550	0501	001	CHAIN LINK FENCE (6 ')	LF	3344.620	3,585.410
						160.000		4554.960			556	0508	001	PIPE UNDDR (TY 8) (6 ")	LF	4714.960	5,748.610
								216.600			556	0510	001	PIPE UNDDR (TY 10) (6 ")	LF	216.600	216.600
						4.000		3.000			610	0509	002	RDWY ILL ASSEM (TY SA 40S-8) (.25 KW) S	EA	7.000	7.000
						12.000					610	0519	002	RDWY ILL AM U/P (TY SPL-CO) (.15KW) S (TY3)	EA	12.000	16.000
						27.000		11.000			613	0506		HIGH MAST ILL POLE (150 FT) (80 MPH)	EA	38.000	39.000
						17.000		11.000			614	0501	001	HI MST ILL ASM (12-400 WATT) (ASYM)	EA	28.000	29.000
						10.000					614	0502	001	HI MST ILL ASM (12-400 WATT) (SYM)	EA	10.000	10.000
						220.000					618	0501		CONDUIT (RM) (3/4 ")	LF	220.000	305.000
						1075.000		780.000			618	0505		CONDUIT (RM) (2 ")	LF	1855.000	2,790.000
						16147.000		7338.000			618	0511		CONDUIT (PVC) (SCHD 40) (2 ")	LF	23485.000	25,426.000
						20.000		40.000			618	0513		CONDUIT (PVC) (SCHD 40) (3 ")	LF	60.000	60.000
						300.000		535.000			618	0514		CONDUIT (PVC) (SCHD 40) (4 ")	LF	835.000	835.000
						2840.000		4090.000			618	0518		CONDUIT (PVC) (SCHD 80) (2 ")	LF	6930.000	16,412.000
						800.000		5120.000			618	0520		CONDUIT (PVC) (SCHD 80) (3 ")	LF	5920.000	5,472.000
						190.000		780.000			618	0521		CONDUIT (PVC) (SCHD 80) (4 ")	LF	970.000	980.000
						360.000		1615.000			618	0526		CONDUIT (RM) (2 ") (PUSH-BORE)	LF	1975.000	2,649.000
						680.000		2180.000			618	0527		CONDUIT (RM) (3 ") (PUSH-BORE)	LF	2860.000	3,112.000
						750.000		355.000			618	0532		CONDUIT (PVC) (SCHD 40) (2 ") (BORE)	LF	1105.000	2,749.000
						950.000		620.000			618	0539		CONDUIT (PVC) (SCHD 80) (2 ") (BORE)	LF	1570.000	1,570.000
						405.000		1050.000			618	0542		CONDUIT (PVC) (SCHD 80) (4 ") (BORE)	LF	1455.000	905.000
						13945.000		15055.000			618	0565		CONDT (HDPEC) (SCH 80) (4 IN W/DUCT)	LF	29000.000	30,177.000
						960.000		855.000			618	0587		CONDT (HDPEC) (SCH 80) (4 IN W/DUCT) (BORE)	LF	1815.000	3,650.000
						250.000					620	0501		ELEC CONDUCTOR (NO. 12) BARE	LF	250.000	330.000
						15592.000		6878.000			620	0503		ELEC CONDUCTOR (NO. 8) BARE	LF	22470.000	22,470.000
						500.000					620	0508		ELEC CONDUCTOR (NO. 10) INSULATED	LF	500.000	660.000
						28304.000		13756.000			620	0509		ELEC CONDUCTOR (NO. 8) INSULATED	LF	42060.000	42,060.000
						16166.000		20086.000			620	0510		ELEC CONDUCTOR (NO. 6) INSULATED	LF	36252.000	26,361.000
						1390.000					620	0512		ELEC CONDUCTOR (NO. 2) INSULATED	LF	1390.000	3,640.000
						66.000		44.000			624	0503		GROUND BOX TY C (162911) W/APRON	EA	110.000	119.000
						44.000		53.000			624	0524		GROUND BOX (TY 2) W/APRON	EA	97.000	123.000
								2.000			628	0545		EL SV TYD (120/240) 070 (NS) GS (T) TP (O)	EA	2.000	2.000
						1.000		1.000			628	0554		ELEC SERV TYA (240/480) 060 (NS) GS (E) TP (O)	EA	2.000	2.000
						6.000		6.000			628	0586		ELEC SERV TYA (240/480) 100 (NS) GS (E) TP (O)	EA	12.000	12.000
						1.000					628	0620		ELEC SERV TYD (120/240) 070 (NS) GS (T) TP (U)	EA	1.000	1.000
						3.000					628	0677		ELEC SERV TYA (120/240) 060 (NS) GS (N) TP (O)	EA	3.000	3.000
						6.000		3.000			628	0678		ELEC SERV TYC (120/240) 060 (NS) GS (N) TP (O)	EA	9.000	0.000
						53.910		3480.490			634	0501		PLYWOOD SIGNS (TY A)	SF	3534.400	3,534.900
						49.910		222.070			636	0501		ALUM SIGNS (TY A)	SF	271.980	294.820
						1791.000		969.250			642	0501	001	ALUM SIGNS (TY O)	SF	2760.250	2,773.250
						58.000		29.000			644	0501		SMALL RDSD SGN ASSM (TY A)	EA	87.000	94.000
						10.000		6.000			644	0502		SMALL RDSD SGN ASSM (TY A-1)	EA	16.000	16.000

ESTIMATE & QUANTITY SHEET

REV. 6-25-99

STATE DIST. NO	COUNTY	PROJECT NO.	SHEET NO.
22	WEBB	NH 99 (462), ETC.	39C

ESTIMATE SUMMARY

				WEBB COUNTY		WEBB COUNTY		WEBB COUNTY		ALT.	ITEM-CODE			DESCRIPTION	UNIT	TOTAL	
				IM 35-1 (65)		C 86-14-23		NH 99 (462)									
				18-5-57 ROADWAY		86-14-23 ALL BID ITEMS		18-6-131 ALL BID ITEMS									
EST.	FINAL	EST.	FINAL	EST.	FINAL	EST.	FINAL	EST.	FINAL		ITEM NO	DESC CODE	SP NO			EST.	FINAL
						2.000		1.000			644	0503		SMALL RDSD SGN ASSM (TY B)	EA	3.000	3.000
						2.000		3.000			644	0504		SMALL RDSD SGN ASSM (TY C)	EA	5.000	9.000
						3.000		4.000			644	0505		SMALL RDSD SGN ASSM (TY D-1)	EA	7.000	7.000
						4.000		6.000			644	0506		SMALL RDSD SGN ASSM (TY D-2)	EA	10.000	10.000
				6.000		32.000		25.000			644	0511		SMALL RDSD SGN ASSM (TY F)	EA	63.000	63.000
				1.000		3.000		2.000			644	0512		SMALL RDSD SGN ASSM (TY G)	EA	6.000	8.000
						1.000					644	0518		SMALL RDSD SGN ASSM (TY A) (FRP)	EA	1.000	1.000
								12810.000			647	0501		LG RDSD SGN SUPT (STRUCT STL)	LB	12810.000	12,810.000
								4.000			649	0503		RELOC LARGE RDSD SGN ASSMS	EA	4.000	5.000
								3.000			650	0510	001	OVHD SGN SUPT (30 FT BAL TEE) (21.0 HT)	EA	3.000	1.000
						1.000					650	0553	001	OVHD SGN SUPT (45 FT BRDG) (21.0 HT)	EA	1.000	1.000
								1.000			650	0555	001	OVHD SGN SUPT (55 FT BRDG) (21.0 HT)	EA	1.000	1.000
								4.000			650	0560	001	OVHD SGN SUPT (80 FT BRDG) (21.0 HT)	EA	4.000	2.000
						1.000					650	0561	001	OVHD SGN SUPT (85 FT BRDG) (21.0 HT)	EA	1.000	1.000
						2.000					650	0562	001	OVHD SGN SUPT (90 FT BRDG) (21.0 HT)	EA	2.000	2.000
						1.000					650	0603	001	OVHD SGN SUPT (35 FT CANT) (21.0 HT)	EA	1.000	1.000
						7.000		35.000			656	0501		FND LG RDSD SGN SUPT (12 IN DRIL SHFT)	LF	42.000	42.000
								195.000			656	0502		FND LG RDSD SGN SUPT (24 IN DRIL SHFT)	LF	195.000	207.000
						20.000		40.000			656	0510		FND FOR TRAF SIG (24 IN DRIL SHFT)	LF	60.000	60.000
						1.000		2.000			656	0518		TRAF SIG CNTRL FND	CY	3.000	3.000
								10.000			656	0521		FND FOR TRAF SIG (TY A) (30IN DR SH)	LF	10.000	10.000
						24.000		18.000			656	0535		FND FOR RDWY ILL ASM (TY A) (30IN DR SH)	LF	42.000	42.000
						48.000		36.000			656	0542		FND FOR TRAF SIG (TY A) (36IN DR SH)	LF	84.000	84.000
						2.000		2.000			658	0577		OBJ MRK ASM SURF MNT (K MARKER)	EA	4.000	3.000
						16378.000		61235.000			662	0501	002	WRK ZN PAV MRK REMOV (W) (4") (SLD)	LF	77613.000	96,791.000
						100.000		1900.000			662	0502	002	WRK ZN PAV MRK REMOV (W) (4") (BRK)	LF	2000.000	4,104.000
								13635.000			662	0507	002	WRK ZN PAV MRK REMOV (W) (8") (SLD)	LF	13635.000	17,489.000
						898.000		1379.000			662	0511	002	WRK ZN PAV MRK REMOV (W) (24") (SLD)	LF	2277.000	345.000
						20561.000		58054.000			662	0523	002	WRK ZN PAV MRK REMOV (Y) (4") (SLD)	LF	78615.000	130,243.000
				104.000				280.000			662	0525	002	WRK ZN PAV MRK REMOV (Y) (4") (DOT)	LF	384.000	928.000
				6329.000		82520.000		193992.000			662	0549	002	WRK ZN PAV MRK NON-REMOV (W) (4") (SLD)	LF	282841.000	91,559.000
						2450.000		1750.000			662	0550	002	WRK ZN PAV MRK NON-REMOV (W) (4") (BRK)	LF	4200.000	4,175.000
						15697.000		9600.000			662	0553	002	WRK ZN PAV MRK NON-REMOV (W) (8") (SLD)	LF	25297.000	2,042.000
				356.000		3150.000		2328.000			662	0557	002	WRK ZN PAV MRK NON-REMOV (W) (24") (SLD)	LF	5834.000	299.500
						2.000					662	0566	002	WRK ZN PAV MRK NON-REMOV (W) (RR XING)	EA	2.000	3.000
				8549.000		107000.000		207973.000			662	0569	002	WRK ZN PAV MRK NON-REMOV (Y) (4") (SLD)	LF	323522.000	73,272.000
						850.000					662	0576	002	WRK ZN PAV MRK NON-REMOV (Y) (24") (SLD)	LF	850.000	0.000
				780.000		33433.000		36858.000			666	0501	018	REFL PAV MRK TY I (W) (4") (SLD)	LF	71071.000	92,666.000
						6445.000		7690.000			666	0502	018	REFL PAV MRK TY I (W) (4") (BRK)	LF	14135.000	16,889.000
						9580.000		8302.000			666	0506	018	REFL PAV MRK TY I (W) (8") (SLD)	LF	17882.000	21,026.000
						80.000		694.000			666	0509	018	REFL PAV MRK TY I (W) (12") (SLD)	LF	774.000	1,679.000
						724.000		120.000			666	0510	018	REFL PAV MRK TY I (W) (12") (LNDP)	LF	844.000	291.000
				110.000		813.000		1195.000			666	0512	018	REFL PAV MRK TY I (W) (24") (SLD)	LF	2118.000	2,118.000
						54.000		18.000			666	0513	018	REFL PAV MRK TY I (W) (ARROW)	EA	72.000	114.000
						1.000		3.000			666	0514	018	REFL PAV MRK TY I (W) (DBL ARROW)	EA	4.000	11.000
						22.000		5.000			666	0517	018	REFL PAV MRK TY I (W) (WORD)	EA	27.000	51.000
				1330.000		34236.000		37248.000			666	0524	018	REFL PAV MRK TY I (Y) (4") (SLD)	LF	72814.000	106,286.000
						100.000					666	0525	018	REFL PAV MRK TY I (Y) (4") (BRK)	LF	100.000	460.000
						35.000					666	0529	018	REFL PAV MRK TY I (Y) (8") (SLD)	LF	35.000	0.000
						497.000		60.000			666	0530	018	REFL PAV MRK TY I (Y) (12") (SLD)	LF	557.000	1,293.000

ESTIMATE & QUANTITY SHEET

REV. 6-25-99

STATE DIST. NO.	COUNTY	PROJECT NO.	SHEET NO.
22	WEBB	NH 99 (462), ETC.	39D

ESTIMATE SUMMARY

				WEBB COUNTY		WEBB COUNTY		WEBB COUNTY		ALT	ITEM-CODE			DESCRIPTION	UNIT	TOTAL	
				IM 35-1 (65)		C 86-14-23		NH 99 (462)									
				18-5-57 ROADWAY		86-14-23 ALL BID ITEMS		18-6-131 ALL BID ITEMS									
EST.	FINAL	EST.	FINAL	EST.	FINAL	EST.	FINAL	EST.	FINAL		ITEM NO	DESC CODE	SP NO			EST.	FINAL
								11.000			672	0506	012	RAIS PAV MRKR CL B (REFL) TY I-A	EA	11.000	0.000
						76.000		83.000			672	0507	012	RAIS PAV MRKR CL B (REFL) TY I-C	EA	159.000	159.000
				45.000		208.000					672	0509	012	RAIS PAV MRKR CL B (REFL) TY II-A-A	EA	253.000	279.000
						582.000		759.000			672	0510	012	RAIS PAV MRKR CL B (REFL) TY II-C-R	EA	1341.000	2,114.000
				2315.000		15910.000		29360.000			677	0501		ELIM EXT PAV MRK & MRKR (4")	LF	47585.000	66,189.000
						400.000		50.000			677	0503		ELIM EXT PAV MRK & MRKR (8")	LF	450.000	5,638.000
				72.000		60.000					677	0506		ELIM EXT PAV MRK & MRKR (24")	LF	132.000	495.000
								1.000			677	0507		ELIM EXT PAV MRK & MRKR (ARROW)	EA	1.000	34.000
								1.000			677	0508		ELIM EXT PAV MRK & MRKR (WORD)	EA	1.000	17.000
								2.000			677	0510		ELIM EXT PAV MRK & MRKR (ENTR GORE)	EA	2.000	1.000
								2.000			677	0511		ELIM EXT PAV MRK & MRKR (EXIT GORE)	EA	2.000	0.000
				2110.000		72824.000		81796.000			678	0515		PAV SURF PREP FOR MRKS (BLAST CLN) (4")	LF	156730.000	73,470.000
						9525.000		8302.000			678	0517		PAV SURF PREP FOR MRKS (BLAST CLN) (8")	LF	17827.000	17,827.000
						1321.000		874.000			678	0518		PAV SURF PREP FOR MRKS (BLAST CLN) (12")	LF	2195.000	1,593.000
				110.000		813.000		1195.000			678	0520		PAV SURF PREP FOR MRKS (BLAST CLN) (24")	LF	2118.000	1,552.000
						55.000		21.000			678	0521		PAV SURF PREP FOR MRKS (BLAST CLN) (ARW)	EA	76.000	51.000
						22.000		5.000			678	0522		PAV SURF PREP FOR MRKS (BLAST CLN) (WRD)	EA	27.000	15.000
						1.000		2.000			680	0502	006	INSTAL OF HWY TRAF SIG (SYSTEM)	EA	3.000	3.000
						3.000					681	0501		TEMP TRAF SIGNALS FOR CONSTRUCTION	EA	3.000	3.000
						46.000		60.000			682	0502		VEH SIG SEC (12 IN)	EA	106.000	106.000
						12.000		16.000			682	0505		PED SIG SEC (2 INDICATIONS IN 1 SEC)	EA	28.000	28.000
						4.000		10.000			682	0509		BACK PLATE (3 SEC) (12 IN)	EA	14.000	14.000
						4880.000		4915.000			684	0502		TRAF SIG CBL (TY A) (2 CONDR) (12 AWG)	LF	9795.000	9,795.000
						1701.000		1728.000			684	0503		TRAF SIG CBL (TY A) (3 CONDR) (12 AWG)	LF	3429.000	3,429.000
						3149.000		3207.000			684	0504		TRAF SIG CBL (TY A) (4 CONDR) (12 AWG)	LF	6356.000	6,416.000
						1835.000		1896.000			684	0505		TRAF SIG CBL (TY A) (5 CONDR) (12 AWG)	LF	3731.000	3,731.000
						2610.000		2860.000			684	0507		TRAF SIG CBL (TY A) (7 CONDR) (12 AWG)	LF	5470.000	8,328.000
						9980.000		18950.000			684	0544		TRAF SIG CBL (TY C) (2 CONDR) (14 AWG)	LF	28930.000	28,486.000
						1867.000		1896.000			684	0558		TRAF SIG CBL (TY A) (3 CONDR) (18 AWG)	LF	3763.000	3,763.000
						2.000					686	0553	001	TRAF SIG POLE ASM (STL) 2 ARM 36-28'LUM	EA	2.000	2.000
						2.000					686	0597	001	TRF SIG POL ASM (STL) 1ARM (40FT) (ILSN)	EA	2.000	2.000
								1.000			686	0599	001	TRF SIG POL ASM (STL) 2ARM (32-28) (LM) ILSN	EA	1.000	1.000
								2.000			686	0600	001	TRF SIG POL ASM (STL) 2ARM (32-32) (LM) ILSN	EA	2.000	2.000
								1.000			686	0601	001	TRF SIG POL ASM (STL) 2ARM (36-32) (LM) ILSN	EA	1.000	1.000
						12.000		16.000			688	0501		PED DETECT (PUSH BTN)	EA	28.000	28.000
				1964.390		31286.160		71063.810			3116	0501		HOT MIX (TY A)	TON	104314.360	107,314.010
				129.680		5639.540		7641.180			3116	0504		HOT MIX (TY D)	TON	13410.400	5,478.530
				4637.790							3142	0501		FAST TRK CONC (CNT RNF HY STL) (12 IN)	SY	4637.790	23,178.268
						1458.660		1344.130			3143	0501		WIDE FLANGE TERM ANCHOR SYS (EXCAV)	CY	2802.790	2,802.786
						264.100		245.590			3143	0502		WIDE FLANGE TERM ANCHOR SYS (CONCRETE)	CY	509.690	509.690
						33616.530		31260.770			3143	0503		WIDE FLANGE TERM ANCHOR SYS (REINF STL)	LB	64877.300	62,947.510
						31259.000		12222.000			4504	0501		SOIL NAIL	LF	43481.000	66,064.000
						267.000					4505	0501		DECK DRAIN (HALF ROUND) (8 IN)	LF	267.000	267.000
								54.000			4506	0501		MODULAR EXPANSION JOINT (8 IN)	LF	54.000	54.000
						280.000		240.000			5005	0504		ROCK FILTER DAMS (TY 2)	LF	520.000	1,566.000
						280.000		240.000			5005	0505		ROCK FILTER DAMS (REMOV & REPLAC) (TY 2)	LF	520.000	30.000
						280.000		240.000			5005	0506		ROCK FILTER DAMS (REMOV) (TY 2)	LF	520.000	749.000
								140.000			5005	0507		ROCK FILTER DAMS (TY 3)	LF	140.000	809.000
								140.000			5005	0508		ROCK FILTER DAMS (REMOV & REPLAC) (TY 3)	LF	140.000	0.000
								140.000			5005	0509		ROCK FILTER DAMS (REMOV) (TY 3)	LF	140.000	809.000

ESTIMATE & QUANTITY SHEET

REV. 6-25-99

STATE DIST. NO.	COUNTY	PROJECT NO.	SHEET NO.
22	WEBB	NH 99 (462), ETC.	39E

ESTIMATE SUMMARY

				WEBB COUNTY		WEBB COUNTY		WEBB COUNTY		ALT	ITEM-CODE			DESCRIPTION	UNIT	TOTAL	
				IM 35-1 (65)		C 86-14-23		NH 99 (462)									
				18-5-57 ROADWAY		86-14-23 ALL BID ITEMS		18-6-131 ALL BID ITEMS									
EST.	FINAL	EST.	FINAL	EST.	FINAL	EST.	FINAL	EST.	FINAL		ITEM NO	DESC CODE	SP NO			EST.	FINAL
				10.000		1442.000		2584.000			5007	0501		BALED HAY FOR EROSN & SEDMT CONT	EA	4036.000	239.500
				10.000		1442.000		2584.000			5007	0502		BL HAY FOR ERSN & SED CONT (RMV & REPL)	EA	4036.000	0.000
				10.000		1442.000		2584.000			5007	0503		BALED HAY FOR EROSN & SED CONT (REMOV)	EA	4036.000	0.000
				136.000		544.000		544.000			5010	0501		CONSTRUCT EXIT (TY 1)	SY	1224.000	3,044.460
				136.000		544.000		544.000			5010	0502		CONSTRUCT EXIT (REMOV & REPLAC) (TY 1)	SY	1224.000	33.530
				136.000		544.000		544.000			5010	0503		CONSTRUCT EXIT (REMOV) (TY 1)	SY	1224.000	2,466.450
						75.000		75.000			5012	0501		BKHOE WORK (EROSN CONT) (CL 1)	HR	150.000	80.000
								12.000			5047	0502		LANDSCAPE BOULDERS	EA	12.000	0.000
						96.000					5145	0501		SANDBAGS FOR EROSION CONTROL	EA	96.000	606.000
				2479.000		24080.000		31875.000			5249	0501		TEMP SEDMT CONT FENCE	LF	58434.000	88,591.000
				2479.000		28430.000		31875.000			5249	0502		TEMP SEDMT CONT FENCE (REMOVE & REPLAC)	LF	62784.000	10,296.000
				2479.000		28430.000		31875.000			5249	0503		TEMP SEDMT CONT FENCE (REMOV)	LF	62784.000	63,134.000
				92.000		1796.000		2656.000			5249	0504		TEMP SDMT CONT FEN (INLET PROTECT)	LF	4544.000	1,528.000
				92.000		2300.000		2656.000			5249	0505		TEMP SD CONT FEN (RMV&RPL) (INLET PRCT)	LF	5048.000	1,256.000
				92.000		2300.000		2656.000			5249	0506		TEMP SDMT CONT FEN (REMOV) (INLET PRCT)	LF	5048.000	1,440.000
						75777.780		88857.090			5280	0503		ANTI-GRAFFITI COATING-TYPE II	SF	164634.870	164,634.870
						1.000		2.000			5453	0507		QUADGUARD SYSTEM (36") (TY CZ) (7 BAY)	EA	3.000	3.000
								3.000			5453	0508		QUADGD SYS (MOV & RESET) 36" (TY CZ) 7 BAY	EA	3.000	18.000
								3.000			5453	0509		QUADGD SYS (REMOVE) 36" (TY CZ) 7 BAY	EA	3.000	3.000
						6.000		25.000			5469	0501		SINGLE GDRAIL TERM (TY I)	EA	31.000	46.000
								1060.000			5559	0501		COLORED-TEXTURIZED CONCRETE (4")	SY	1060.000	3,152.650
						21957.200		62261.340			5579	0501		LANDSCAPE PAVERS	SF	84218.540	84,728.670
						2.000		1.000			5585	0501		REACT 350 (70 MPH) (30' 8")	EA	3.000	7.000
								2.000			5585	0505		REACT 350 (45 MPH) (15'8")	EA	2.000	4.000
								2.000			5600	0501		16" WET CONNECTION	EA	2.000	0.000
								5322.000			5600	0502		16" PVC-CL235, DR 18 (4'-6' DEPTH)	LF	5322.000	0.000
								9.000			5600	0503		16" GATE VALVES	EA	9.000	0.000
								1.000			5600	0504		AUTO AIR RELEASE VALVES	EA	1.000	0.000
								461.000			5600	0505		32" X .531" CASING (JACK/BORE)	LF	461.000	0.000
								368.000			5600	0506		32" X .531" CASING (TRENCH)	LF	368.000	0.000
								341.000			5600	0507		STABILIZED BACKFILL	CY	341.000	0.000
						4.000		8.000			6008	0501		PEDESTAL POLE ASSEM	EA	12.000	12.000
						1.000		2.000			6010	0501		SALV TRAF SIGNALS	EA	3.000	3.000
						4.000		8.000			6210	0501		ILSN SIGN 6 S	EA	12.000	4.000
						2.000					6210	0503		ILSN SIGN 8 S	EA	2.000	10.000
						13.000		13.000			6519	0501		DETECTOR UNIT	EA	26.000	24.000
								7.000			6670	0503		PORT CHANGE MES SGN (TY I OR TY II)	DAY	7.000	15.000
						14.000		20.000			6955	0501		12 INCH LED TRAF SIGNAL LAMP (RED)	EA	34.000	34.000
						14.000		16.000			6955	0503		12 INCH LED TRAF SIGNAL LAMP (GREEN)	EA	30.000	30.000
						1.000					6959	0501	001	VIVDS PROCESSOR SYSTEM	EA	1.000	1.000
						6.000					6959	0502	001	VIVDS CAMERA ASSEMBLY	EA	6.000	13.000
						1.000					6959	0503	001	VIVDS SET-UP SYSTEM	EA	1.000	1.000
						1867.000					6959	0505	001	VIVDS COMMUNICATION CABLE (COAXIAL)	LF	1867.000	3,365.000
								1.000			8033	0501		ILLUMINATION SYSTEM	EA	1.000	0.000
						1.000		5.000			8034	0501		DIAL-UP 14400 BPS MODEM	EA	6.000	6.000
						1.000		4.000			8039	0501		FIBER OPTIC DMS FIELD EQUIP (18 INCH)	EA	5.000	4.000
								1.000			8039	0502		FIBER OPTIC DMS MASTER EQUIP	EA	1.000	1.000
						270.000		608.000			8040	0501		COAXIAL CABLE	LF	878.000	2,999.000
						1.000		2.000			8040	0502		ANTENNA (UNIDIRECTIONAL)	EA	3.000	3.000
						1.000		2.000			8040	0503		SPREAD SPECTRUM RADIO	EA	3.000	3.000

ESTIMATE & QUANTITY SHEET

REV. 6-25-99

STATE DIST. NO	COUNTY	PROJECT NO.	SHEET NO.
22	WEBB	NH 99 (462). ETC.	39F

ESTIMATE SUMMARY

				WEBB COUNTY		WEBB COUNTY		WEBB COUNTY		ALT	ITEM-CODE			DESCRIPTION	UNIT	TOTAL	
				IM 35-1 (65)		C 86-14-23		NH 99 (462)									
				18-5-57 ROADWAY		86-14-23 ALL BID ITEMS		18-6-131 ALL BID ITEMS									
EST.	FINAL	EST.	FINAL	EST.	FINAL	EST.	FINAL	EST.	FINAL		ITEM NO	DESC CODE	SP NO			EST.	FINAL
						9610.000		6080.000			8063	0501		COMMUN CABLE (6 PAIR) (22 AWG)	LF	15690.000	23,835.000
						2.000					8066	0501		VIDEO MULTPLX FIBER OPTIC TRANS EQUIP	EA	2.000	2.000
						4.000		3.000			8067	0501		LIMITED DISTANCE MODEM (RACK MOUNTED)	EA	7.000	7.000
						6.000		9.000			8067	0502		LIMITED DISTANCE MODEM (STAND ALONE)	EA	15.000	13.000
						3.000		3.000			8068	0501		CCTV FIELD EQUIPMENT	EA	6.000	4.000
						1.000					8069	0501		CCTV CENTRAL EQUIPMENT	LS	1.000	2.000
						7.000		8.000			8070	0501		FTM LANE CONTROL SIGNAL EQUIP	EA	15.000	15.000
						1.000		3.000			8071	0501		CAMERA POLE STRUCTURE (50 FT)	EA	4.000	3.000
						1.000					8071	0502		CAMERA POLE STRUCTURE (40 FT)	EA	1.000	1.000
						2.000		2.000			8076	0501		CABINET (TY 3)	EA	4.000	5.000
						5.000		3.000			8077	0501		VOICE COMMUN EQUIPMENT	EA	8.000	21.000
						26.000		26.000			8078	0501		LOOP DETECTOR (SC&C)	EA	52.000	30.000
						2.000		3.000			8079	0501		COMMUN HUB BLDG	EA	5.000	5.000
						12.000		5.000			8080	0501		DATA FIBER OPTIC TRANSCEIVER	EA	17.000	15.000
						3.000		3.000			8080	0502		DATA FIBER OPTIC TRANS BYPASS SWITCH	EA	6.000	6.000
						6.000		3.000			8093	0501		D/I MULDEM	EA	9.000	9.000
								1.000			8098	0501		REM & REL FIBER OPTIC CMS SYSTEM	EA	1.000	1.000
						1.000					8099	0501		ENVIRON CONTR COMM BLDG	EA	1.000	1.000
						3.000		3.000			8100	0501		VIDEO FIBER OPTIC TRANSMITTER	EA	6.000	4.000
						6.000					8100	0502		VIDEO FIBER OPTIC RECEIVER	EA	6.000	6.000
						3780.000		1565.000			8101	0501		FIB OPTIC CABLE (SINGLE MODE) (DRP CBL)	LF	5345.000	6,436.000
						12845.000		17535.000			8101	0502		FIB OPTIC CABLE (SINGLE MODE) (72 FIBER)	LF	30380.000	32,573.000
						4720.000					8101	0503		FIB OPTIC CABLE (SINGLE MODE) (36 FIBER)	LF	4720.000	0.000
						4.000		3.000			8102	0501		LOCAL CONTROL UNIT	EA	7.000	6.000
								1.000			8108	0501		SYSTEM SUPPORT EQUIPMENT	LS	1.000	1.000
														RAILROAD FORCE ACCOUNT WORK (PART)			
														FLAGGING, SHOOFLY, TEMPORARY SIGNALS,			
														TEMPORARY PLANKING AND WARNING DEVICES		1.000	
														CONTRACTOR FORCE ACCOUNT WORK (PART)			
														OFF DUTY POLICE OFFICER (TRAF CONTROL)	LS	1.000	

ESTIMATE & QUANTITY SHEET

REV. 6-25-99

STATE DIST. NO	COUNTY	PROJECT NO.	SHEET NO.
22	WEBB	NH 99 (462), ETC.	39G

ESTIMATE SUMMARY - ADDED CHANGE ORDER ITEMS

EST.	FINAL	EST.	FINAL	EST.	FINAL	EST.	FINAL	EST.	FINAL	ALT.	ITEM-CODE ITEM NO	DESC CODE	SP NO	DESCRIPTION	UNIT	TOTAL EST.	TOTAL FINAL
											9100	9502	901	PREP ROW	STA	238.160	238.160
											0105	0518		RMV STB BS AND/OR ASPH PAV (CL 2) (16")	SY	6,667.000	9,870.440
											0132	0512		EMBANK (DENS CONT) (TY D) (CL 3)	CY	161,987.000	161,987.000
											0169	0503		SOIL RET BLNKT (CL 1) (TY C)	SY	31,115.510	108,682.370
											0247	0597	076	FL BS (COMPL IN PLAC) (TY D GR6 CL 2)	TON	2,270.740	2,270.740
											0247	0697	074	FL BS (RDWY DEL) (TY D GR6 CL 2)	TON	26,581.060	26,581.060
											0247	0597	082	FL BS (COMPL IN PLAC) (TY D GR6 CL 2)	TON	1,583.550	26,581.060
											0247	0597	083	FL BS (COMPL IN PLAC) (TY D GR6 CL 2)	TON	427.090	427.090
											0310	0501		ASPH MATRL (MC- 30)	GAL	24,325.910	26,532.000
											0354	0576		PLANE ASPH CONC PAV (4" TO 12")	SY	808.000	0.000
											0400	0510		CUT AND RESTORING PAV (ASPH)	SY	14.000	14.000
											9400	9043	001	CEMTENT STAB BACKFILL (EROSION CONTROL)	CY	40.000	40.000
											0403	0504	901	TEMPORARY SPL SHORING (RAILROAD)	SF	680.000	680.000
											0403	0504		TEMPORARY SPL SHORING (RAILROAD)	SF	840.000	840.000
											0416	0520		DRILL SHAFT (54 IN) (SIGN MTS)	LF	66.000	66.000
											9420	9047		CONC CL B (SPECIAL)	CY	2,128.640	1,833.020
											0450	0526	999	RAIL (TY SSTR)	LF	25,890.170	22,047.970
											0450	0739	999	RAIL (TY SSTR) W/DRAIN SLOTS	LF	13,269.550	18,254.500
											0462	0557	901	CONC BOX SEWER (7 FT X 6 FT)	LF	270.000	270.000
											0467	0735		SAFE END TRT (TYP II) (48 ") (RCP) (6:1) (P)	EA	1.000	1.000
											0476	0515		JACK OR BOR PIPE (48 IN) (RC) (CL IV)	LF	250.000	250.000
											0481	0508		PVC PIPE (SCH 40) (1 IN)	LF	475.000	0.000
											0481	0511		PVC PIPE (SCH 40) (3 IN)	LF	70.000	0.000
											0531	0513		CONC SIDEWALK (WHEELCHAIR RAMP) (TY 1)	EA	2.000	53.000
											0540	0507		MTL BM GD FEN (BLK OUT) (12GA) TIM POST	LF	2,265.000	2,275.000
											0540	0547		MTL BM GD FEN (MOVE & RESET)	LF	150.000	150.000
											0620	0510	100	ELEC CONDUCTOR (NO. 6) INSULATED	LF	6,600.000	0.000
											0628	0835		ELC SRV TY D (120/240)100 (NS)GS(N)TP(O)	EA	2.000	3.000
											0628	0678	999	ELEC SERV TYC (120/240)060(NS)GS(N)TP(O)	EA	9.000	0.000
											0628	0698		ELEC SERV TYD (120/240)060(NS)GS(N)TP(O)	EA	11.000	10.000
											0644	0533		SMALL RDSD SGN ASSM (TY A-2)	EA	4.000	4.000
											0650	0554		OVHD SGN SUPT (50 FT BRDG) (21.0 HT)	EA	1.000	0.000
											0650	0604	900	OVHD SGN SUPT (40 FT CANT) (21.0 HT)	EA	3.000	3.000
											0662	0558		WRK ZN PAV MRK NON-REMOV (W) (ARROW)	EA	45.000	6.000
											0662	0562		WRK ZN PAV MRK NON-REMOV (W) (WORD)	EA	32.000	4.000
											0662	0555		WRK ZN PAV MRK NON-REMOV (W) (12") (SLD)	LF	540.000	432.000
											0666	0535		REFL PAV MRK TY II (W) (4") (SLD)	LF	51,949.000	48,391.000
											0666	0536		REFL PAV MRK TY II (W) (4") (BRK)	LF	9,365.000	9,365.000
											0666	0539		REFL PAV MRK TY II (W) (8") (SLD)	LF	15,802.000	20,261.000
											0666	0541		REFL PAV MRK TY II (W) (12") (SLD)	LF	774.000	1,333.000
											0666	0542		REFL PAV MRK TY II (W) (12") (LNDP)	LF	792.000	174.000
											0666	0544		REFL PAV MRK TY II (W) (24") (SLD)	LF	1,671.000	1,371.000
											0666	0545		REFL PAV MRK TY II (W) (ARROW)	EA	44.000	48.000
											0666	0546		REFL PAV MRK TY II (W) (DBL ARROW)	EA	3.000	4.000
											0666	0549		REFL PAV MRK TY II (W) (WORD)	EA	13.000	22.000
											0666	0556		REFL PAV MRK TY II (Y) (4") (SLD)	LF	52,138.000	40,631.000
											0666	0557		REFL PAV MRK TY II (Y) (4") (BRK)	LF	100.000	0.000
											0666	0561		REFL PAV MRK TY II (Y) (12") (SLD)	LF	377.000	86.000
											0677	0504		ELIM EXT PAV MRK & MRKR (12")	LF	540.000	0.000
											3146	0543		HOT MIX (TY C) (SUR) (PG 76-22)	TON	7,934.870	10,162.570

ESTIMATE SUMMARY - ADDED CHANGE ORDER ITEMS

EST.	FINAL	EST.	FINAL	EST.	FINAL	EST.	FINAL	EST.	FINAL	ALT.	ITEM-CODE ITEM NO	DESC CODE	SP NO	DESCRIPTION	UNIT	TOTAL EST.	TOTAL FINAL
											5819	0504		SINGLE GUARDRAIL TERM (MOVE&RESET) TY I	EA	1.000	1.000
											6224	0501		RACK MOUNT ELECTRONIC EQUIP CAB	EA	3.000	3.000
											6519	0502		DETECTOR CARD RACK (8 SLOTS)	EA	6.000	6.000
											6519	0503		POWER SUPPLY	EA	6.000	6.000
											6670	0503	911	PORT CHANGE MES SGN (TY I OR TY II)	DAY	80.000	81.000
											6670	0503	912	PORT CHANGE MES SGN (TY I OR TY II)	DAY	136.000	321.000
											6959	0501	901	VIVDS PROCESSOR SYSTEM	EA	2.000	2.000
											6959	0503	901	VIVIDS SET-UP SYSTEM	EA	2.000	2.000
											8033	0501	103	ILLUMINATION SYSTEM	EA	1.000	1.000
											8063	0501	100	COLUMN CABLE (6 PAIR) (22 AWG)	LF	1,250.000	0.000
											8101	0501	100	FIB OPTIC CABLE (SINGLE MODE) (DRP CBL)	LF	1,655.000	0.000
											9100	0903		PARTNERING MEETING	LS	1.000	1.000
											9100	0902		MOVE TRAF. SIGNAL CONTR. CO=2	LS	1.000	1.000
											9000	0907	901	UPRR BRIDGE DES. MODIFICATION CO=7	LS	1.000	1.000
											9058	0901		TEMP TRAFF SIG MODIF AT MCPHERSON CO=58	LS	1.000	1.000
											9060	0001		ADDITION OF T BASES TO LIGHT POLE CO=60	LS	1.000	1.000
											9062	0901		DC1 TRAFFIC CONTROL SETUP	LS	1.000	1.000
											9062	0902	002	DC1 TC MAINTENANCE	MO	42.000	42.000
											9062	0903	003	DC2 INITIAL TRAFFIC CONTROL SETUP	LS	1.000	1.000
											9031	0001		42" RCP RELOC INLET G69 & MH G3	LS	1.000	1.000
											9072	0001		SET OF 50' CAMERA POLE ANCHOR BOLTS	EA	2.000	2.000
											9075	0001		JACKING & SUPPORTING FOR REPAIR DC1 & 2	EA	100.000	100.000
											9400	0002		MILESTONE #1 LIQ DAMAGES /PENALTY	DAY	156.000	156.000
											9062	0903	003	DC2 INITIAL TRAFFIC CONTROL SETUP	LS	1.000	1.000
											9031	0001		42" RCP RELOC INLET G69 & MH G3	LS	1.000	1.000
											9072	0001		SET OF 50' CAMERA POLE ANCHOR BOLTS	EA	2.000	2.000
											9075	0001		JACKING AND SUPPORTING FOR REPAIR DC1 & 2	EA	100.000	100.000
											9400	0002		MILESTONE #1 LIQ DAMAGES/PENALTY	DAY	231.000	229.000
											9400	0003		MILESTONE #2 BONUS	DAY	2.000	2.000
											9500	0502	900	OCOA HOT MIX PLACEMENT BONUS	LS	56,341.890	82,851.690
											9500	0503	900	OCOA HOT MIX PRODUCTION PENALTY	LS	20,107.570	21,307.270
											9500	0504		OCOA HOT MIX PLACEMENT PENALTY	LS	1,135.360	7,197.760
											9008	0901		ABUT. BACKWALL MODIFICATION CO=8	LS	1.000	1.000
											9009	0902		OFF DUTY POLICE (TRAF CONT.) CO=9S	HR	7,400.000	7,626.250
											9000	0922	901	REGRADE RAMP "H" CO=22	LS	1.000	1.000
											9000	0922	902	REGRADE MCPHERSON, PH 1 CO=22	LS	1.000	1.000
											9000	0916	901	CLEAN TIE BARS CO=16	EA	960.000	960.000
											9000	0916	902	MEDALLION "A" MODIFICATION CO=16	LS	1.000	1.000
											9026	0902		HOT MIX (TYA) (16") CO=26	TON	3,500.000	9,661.400
											9026	0901		FULL DEPTH PAVEMENT REPAIR (16") CO= 26	SY	2,242.670	2,242.670
											9000	9024	901	NEW CONTROL CABLES (DMS=6) CO=24	LS	1.000	1.000
											9028	0901		MSE WALL PANEL REIMBURSEMENT	SF	6,159.060	6,159.060
											9025	0901		FLEX BASE (TY-A) (GR-1)	CY	1,200.000	2,551.330
											9033	9010		MILLINGS FOR SOFT SPOTS	SY	1,055.000	1,082.330
											9034	0901		TEMPORARY TRAFFIC SIGNALS	EA	1.0001.000	1.000
											9044	0476		24" JACK&BORE (INSTALL& REMOVE) W/ CASING	LF	200.000	320.000
											9048	0901		EMERGENCY DRAINAGE REPAIR	LS	1.000	0.930
											9046	0001		CUT REBAR & INSTALL DOWELS	LS	1.000	1.000
											9038	0001		AEP EXTEND PRIMARY SERVICE TO PP=2	LS	1.000	1.000
											9039	0001		CULVERT REMOVAL	LS	1.000	1.000

ESTIMATE & QUANTITY SHEET

STATE DIST. NO.	COUNTY	PROJECT NO.	SHEET NO.
22	WEBB	NH 99 (462), ETC.	39 I

ESTIMATE SUMMARY - ADDED CHANGE ORDER ITEMS

EST.	FINAL	EST.	FINAL	EST.	FINAL	EST.	FINAL	EST.	FINAL	ALT.	ITEM-CODE ITEM NO	DESC CODE	SP NO	DESCRIPTION	UNIT	TOTAL EST.	TOTAL FINAL
											9054	0001		CONC SIDEWALK WHEELCHAIR RAMP TY 7	EA	2.000	0.000
											9055	0001		REACT 350 (MOVE & RESET) 45 MPH	EA	3.000	0.000
											9055	0002		REACT 350 (REMOVE) 45 MPH	EA	4.000	0.000
											9055	0003		REACT 350 (MOVE & RESET) 70 MPH	EA	3.000	0.000
											9055	0004		REACT 350 (REMOVE) 70 MPH	EA	2.000	0.000
											9063	0901		EMERGENCY SIGN REPAIR	LS	1.000	1.000
											9055	0005		LANE CLOSURE	EA	12.000	0.000
											9055	9001		REACT 350 (MOVE AND RESET) 45 MPH	EA	4.000	1.000
											9055	9002		REACT 350 (REMOVE) 45 MPH	EA	2.000	0.000
											9055	9003		REACT 350 (MOVE AND RESET) 70 MPH	EA	3.000	3.000
											9055	9004		REACT 350 (REMOVE) 70 MPH	EA	2.000	2.000
											9065	0002		COMP FOR DELAYS UPRR BRIDGE CONSTR	LS	1.000	1.000
											9066	0001		SOIL NAIL RETROFIT W/2" CONC WALL B/G/H	SF	18,065.000	18,065.000
											9065	0003		COMP FOR DELAYS UPRR JUN03 TO OCT03	LS	1.000	1.000
											9067	0001		RELOC OF GROUND BOX REIMB	LS	1.000	1.000
											9073	0001		REPAIR DC1 & DC2 (50% LABOR & EQUIP)	EA	604,645.770	604,053.530
											9079	0001		ADDTL COST INCUR-SP PROV 421	LS	1.000	1.000
											9080	0002		AEP ELEC SVC WORK @ 2 SEP LOCATIONS	LS	1.000	1.000
											9086	0003		AEP ELEC SVC WORK TO POWER HMAST	LS	1.000	1.000
											9081	0540	506	RAIL (TYPR1) (MOD)-MATERIAL	LF	134.000	0.000
											9083	0001		REMOBILIZE BORING CREW	LS	1.000	1.000
											9087	0001		REPLACE WINCH ON HIGHMAT NO. 23	LS	1.000	1.000
											9086	0001		RELOCATE TY2 GROUND BOX	LS	1.000	1.000
											9086	0002		REPAIR DAMAGED CONDUIT DUCTBANK	LS	1.000	1.000
											9088	0001		PLACE AND REMOVE REBAR	LS	1.000	1.000
											9090	0001		SALE & INSTALL-SOLAR FLASHR ASSM/2 SIGNS	LS	1.000	1.000
											9091	0001		REPAIR AND INSTALL SERV POLE 6A	LS	1.000	1.000
											9092	0001		SALE OF OVHD SIGN BRIDGES TO TXDOT	LS	1.000	1.000
											9093	0001		REMOVE 12" PCCP	LS	1.000	1.000
											9094	0002		BEARING SEAT REPAIR (STEEL SPANS)	EA	92.000	84.000
											9094	0003		INSTALL STEEL DIAPHRAMS	EA	12.000	12.000
											9094	0004		MOBILIZE/DEMOBILIZE TRK PLATFORMS	EA	4.000	4.000
											9096	0001		CUTTING OFF TOPS OF I-BEAMS	LS	1.000	1.000
											9100	0001		DELIV OF UNUSED CCTV EQUIP TO TXDOT	LS	1.000	0.000
											9104	0001		REPLACE PED POLE DAMAGED BY TRAF ACCIDE	LS	1.000	1.000
											9098	0001		COMP FOR DELAYS DUE TO SUBGR FAILURES	LS	1.000	1.000
											9105	0001		REIMB MEDINA ELEC PMT PP#10 & SP "L"	LS	1.000	1.000
											9106	0001		REMOVAL OF STAMPED CONC FORMWORK	LS	1.000	1.000
											9107	0002		RELOC & REPAIR PED POLE (LP20 & MCPH)	LS	1.000	1.000
											9107	0003		REPLAC TWO RDWY LIGHTING DRL SHFT FDTNS	LS	1.000	1.000
											9108	0001		MBGF REPAIR WORK-REQUESTED BY TXDOT	LS	1.000	1.000
											9109	0001		ADD LUMIN AT TEMP SIGNALS LP20/MCPH INT	LS	1.000	1.000
											8068	100	001	CCTV CAMERA-MATERIAL	EA	2.000	2.000
											8068	100	002	CCTV CAMERA CONTROL UNIT-MATERIAL	EA	2.000	2.000
											8071	100	001	CAMERA POLE STRUCTURE (50 FT)-MATERIAL	EA	1.000	1.000
											8071	100	002	CCTV CAMERA POLE CABINET-MATERIAL	EA	2.000	2.000
											8063	501	100	COMMUN CABLE (6 REPAIR) (22 AWG)-MATERIAL	LF	1,250.000	1,250.000
											620	510	100	ELEC CONDUCTOR (NO.6) INSULATED MATERIAL	LF	6,600.000	6,600.000
											8101	501	100	FIB OPTIC CABLE (SINGLE MODE) (DRP CBL)-MATERIAL	LF	1,655.000	1,655.000
											9100	001		DELIVERY OF UNUSED CCTV EQUIPMENT TO TXDOT	LS	1.000	1.000

ESTIMATE SUMMARY - ADDED CHANGE ORDER ITEMS

EST.	FINAL	EST.	FINAL	EST.	FINAL	EST.	FINAL	EST.	FINAL	ALT.	ITEM-CODE: ITEM NO	ITEM-CODE: DESC CODE	ITEM-CODE: SP NO	DESCRIPTION	UNIT	TOTAL: EST.	TOTAL: FINAL
											9110	001		ADDITION OF FLEXBASE AT MCPHERSON & UNIROYAL	SY	10,050.000	10,050.000

ESTIMATE & QUANTITY SHEET

STATE DIST. NO.	COUNTY	PROJECT NO.	SHEET NO.
22	WEBB	NH 99 (462), ETC.	39K

TRAFFIC CONTROL PLAN	ITEM 508	ITEM 512 PORTABLE CONCRETE TRAFFIC BARRIER				ITEM 649	ITEM 677 ELIMINATE EXIST PAV MARKINGS AND MARKERS						
	CONSTRUCT DETOURS (CL 1) STA	FURN & INSTALL FT	STKPL. INSTL & RETURN FT	MOVE & RESET FT	REMOVE FT	RELOCATE LARGE RDSD SGN ASSMS EA	4" FT	8" FT	24" FT	ARROW FT	WORD FT	ENTR GORE FT	EXIT GORE FT
	508 501	512 501	512 502	512 503	512 504	649 503	677 501	677 503	677 506	677 507	677 508	677 510	677 511
LP20 - CSJ 0086-14-023													
PHASE I	13.77		1.740				6.910		24				
PHASE IA				390			1.200						
PHASE II													
PHASE IIA													
PHASE III	7.32	340		680			1.250						
PHASE IV							6.550	400	36				
LP20 TOTALS	21.09	340	1.740	1.070	0	0	15.910	400	60	0	0	0	0
IH35 - CSJ 0018-06-131													
PHASE I	25.76	1.150	11.860			3	19.660	50		1	1	1	1
PHASE IA		4.580		13.390			7.895					1	1
PHASE II		850				1	970						
PHASE IIA				1.090									
PHASE III				1.810									
PHASE IV		6.200		11.570	13.120		835						
IH35 - CSJ 0018-05-057													
UNIROYAL ROAD	14.13						2.315		72				
IH35 TOTALS	39.89	12.780	11.860	27.860	13.120	4	31.675	50	72	1	1	2	2
PROJECT TOTALS	60.98	13.120	13.600	28.930	13.120	4	47.585	450	132	1	1	2	2

NOTE: PHASE IV QUANTITIES INCLUDE BARRIER NEEDED PER PRE PHASE IV REQUIREMENTS AS SHOWN IN THE SEQUENCE OF CONSTRUCTION.

TRAFFIC CONTROL PLAN	ITEM 3116 * ASPH CONC		ITEM 5453 QUADGUARD SYSTEM			ITEM 6670 PORTABLE
	(TY A) TON	(TY D) TON	36" TY CZ 7 BAY EA	MV&RESET 36" TY CZ 7 BAY EA	REMOVE 36" TY CZ 7 BAY EA	CHANGEABLE MESSAGE SIGN (TY I OR II) DAY
	3116 501	3116 504	5453 507	5453 508	5453 509	6670 5003
LP20 - CSJ 0086-14-023						
PHASE I						
PHASE IA			1			
PHASE II						
PHASE IIA						
PHASE III						
PHASE IV						
LP20 TOTALS	0	0	1	0	0	0
IH35 - CSJ 0018-06-131						
PHASE I	4771	1590	2			
PHASE IA				1		
PHASE II						
PHASE IIA					2	7
PHASE III				1		
PHASE IV				1	1	
IH35 TOTALS	4771	1590	2	3	3	7
PROJECT TOTALS	4771	1590	3	3	3	7

* FOR MEDIAN FILL AREAS

DATE	BY	REV	REVISION

© 1999 Texas Department of Transportation

Brown & Root
HOUSTON, TEXAS

RHI
RODRIGUEZ & HUGGINS, INC.
CONSULTING ENGINEERS
11824 JOLLYVILLE ROAD SUITE 402
AUSTIN, TEXAS 78759
PHONE: 512 335 1754 FAX: 512 335 1799

LOOP 20/IH35
TRAFFIC CONTROL PLAN QUANTITY SUMMARIES

SHEET 1 OF 2

FED RD DIV NO	STATE PROJECT NO		SHEET NO
6			40
STATE	STATE DIST NO	COUNTY	
TEXAS	22	WEBB	
CONT	SECT	JOB	HIGHWAY NO
0086	14	023	LOOP 20

TRAFFIC CONTROL PLAN	ITEM 662 WORK ZONE PAVEMENT MARKINGS												
	REMOVABLE						NON-REMOVABLE						
	4" WHITE SOLID FT	4" WHITE BROKEN FT	8" WHITE SOLID FT	24" WHITE SOLID FT	4" YELLOW SOLID FT	4" YELLOW DOT FT	4" WHITE SOLID FT	4" WHITE BROKEN FT	8" WHITE SOLID FT	24" WHITE SOLID FT	WHITE RR XING EA	4" YELLOW SOLID FT	24" YELLOW SOLID FT
	662 501	662 502	662 507	662 511	662 523	662 525	662 549	662 550	662 553	662 557	662 0566	662 569	662 576
LP20 - CSJ 0086-14-023													
PHASE I	8,443	100		76	9,921		872		724	62	2	4,668	
PHASE IA	615			822			8,478	420	5,625	816		14,688	
PHASE II							5,276	280	3,708	506		9,024	
PHASE IIA							1,049		540	213		1,265	
PHASE III							28,330	1,080	2,430	698		32,982	340
PHASE IV	7,320				10,640		38,515		2,670	855		44,373	510
LP20 TOTALS	16,378	100	0	898	20,561	0	82,520	1,780	15,697	3,150	2	107,000	850
IH35 - CSJ 0018-06-131													
PHASE I	6,824		4,114	344	7,752	280	31,548	200		32		34,764	
PHASE IA	13,884	1,140	3,333	321	12,978		47,619	1,350	495	180		51,033	
PHASE II	11,142	760	2,168	214	12,164		36,750	900	1,610	586		42,206	
PHASE IIA	510												
PHASE III	15,440		2,760	200	14,530		35,530		2,550	600		41,570	
PHASE IV	13,435		1,260	300	10,630		42,545		4,945	930		38,400	
IH35 - CSJ 0018-05-057													
UNIROYAL ROAD						104	6,329			356		8,549	
IH35 TOTALS	61,235	1,900	13,635	1,379	58,054	384	200,321	2,450	9,600	2,684	0	216,522	0
PROJECT TOTALS	77,613	2,000	13,635	2,277	78,615	384	282,841	4,230	25,297	5,834	2	323,522	850

NOTE: ALL NON-REMOVABLE PAVEMENT MARKING QUANTITIES ARE CALCULATED BASED ON A TOTAL REDO OF NEEDED MARKINGS AT SIX MONTH INTERVALS.

DETOUR QUANTITIES *

DETOUR	EARTHWORK		ASPHALT CONCRETE	
	CUT CY	FILL CY	(TY A) TON	(TY D) TON
LP20 - CSJ 0086-14-023				
3464RR (PHASE I)	635	630	851	274
20W1A (PHASE I)	2108	41	1054	337
20W3A (PHASE III)	498	4465	878	271
LP20 TOTALS	3241	5136	2783	882
IH35 - CSJ 0018-06-131				
35S1B (PHASE I)	38	39	251	79
35N1A (PHASE I)	771	64	752	232
35N1B (PHASE I)	75	2	289	94
35S1D	1132	62	855	273
IH35 - CSJ 0018-05-057				
UNIROYAL ROAD	255	255	1210	337
IH35 TOTALS	2271	422	3357	1015
PROJECT TOTALS	5512	5558	6140	1897

* FOR CONTRACTOR'S INFORMATION ONLY.

STATE OF TEXAS
JEFFERY T. SEILER
77187
REGISTERED PROFESSIONAL ENGINEER

Jeffery T. Seiler
5-13-99

DATE	BY	REV	REVISION

© 1999 Texas Department of Transportation

Brown & Root
HOUSTON, TEXAS

RSH
RODRIGUEZ & HUGGINS, INC.
CONSULTING ENGINEERS
11824 JOLLYVILLE ROAD SUITE 402
AUSTIN, TEXAS 78759
PHONE: 512 335 1754 FAX: 512 335 1799

LOOP 20/IH35
TRAFFIC CONTROL PLAN
QUANTITY SUMMARIES

SHEET 2 OF 2

FED RD DIV NO	STATE PROJECT NO		SHEET NO
6			41
STATE	STATE DIST NO	COUNTY	
TEXAS	22	WEBB	
CONT	SECT	JOB	HIGHWAY NO
0086	14	023	LOOP 20

CSJ 0086-14-023

SUMMARY OF LOOP 20 ROADWAY QUANTITIES

ITEM NO. - DESCRIPTION			100-502	110-501	132-509	132-512	164-507	164-508	164-554	166-509	168-501	204-503	260-510	260-514	276-628	314-502
LOCATION			PREP ROW	EXCAVATION (RDWY)	EMBANK (DENS CONT) (TY C) (CL 3)	EMBANK (DENS CONT) (TY D) (CL 3)	STND SEED FOR COOL SEASON TMP ERSN CNT	STND SEED FOR WARM SEASON TMP ERSN CNT	CELL FIB SEED (PERM) (RURAL)(CLAY)	FERT (13-13-13)	VEG WATER	SPRINKLING (DUST CONTROL)	LIME TREAT SUBGR (DC) (8 IN)	LIME (TY A SLURRY) OR (TY B)	CEM TRT BS (STR-O)TY D1 OR D2(GR6)(CL6) VAR DEPTH	EMULS ASPH (BS OR SUBGR TRT) (MS-2)
SHEET NO.	BEGINNING STATION	ENDING STATION	STA	CY	CY	CY	AC	AC	AC	TON	MG	MG	SY	TON	CY	GAL
LOOP 20 - EB FRONTAGE ROAD																
1	426+50.83	431+00.00	0	0	0	0	0	0	0	0	0	0	0	0	0.00	0
2	431+00.00	443+00.00	0	0	0	0	1.65	1.65	1.84	0.44	199.67	7	2664.44	23.98	0.00	529
3	443+00.00	453+00.00	0	0	0	0	4.72	4.72	5.25	1.27	570.00	6	3948.89	35.54	0.00	785
4	453+00.00	463+00.00	0	0	0	0	4.74	4.74	5.26	1.27	571.72	6	3932.16	36.37	87.58	742
5	463+00.00	473+00.00	0	0	0	0	3.55	3.55	3.94	0.95	427.78	4	4731.11	42.58	0.00	941
6	473+00.00	483+00.00	0	0	0	0	3.48	3.48	3.86	0.93	419.37	8	5641.64	50.78	0.00	1122
7	483+00.00	493+00.00	0	0	0	0	3.64	3.64	4.04	0.98	439.28	2	4722.22	42.50	0.00	939
8	493+00.00	500+70.00	0	0	0	0	3.66	3.66	4.06	0.98	441.30	11	2888.38	29.24	290.06	441
LOOP 20 - WB FRONTAGE ROAD																
1	429+13.30	431+00.00	1.9	14446	3298	0	0.35	0.35	0.39	0.09	41.97	10	1953.53	20.18	232.07	282
2	431+00.00	441+00.00	10	62534	5	0	2.54	2.54	2.82	0.68	306.73	5	3100.30	27.91	0.00	616
3	441+00.00	451+00.00	10	206438	0	0	5.27	5.27	5.86	1.42	636.25	8	4873.33	43.86	0.00	969
4	451+00.00	461+00.00	10	85892	356	0	3.19	3.19	3.54	0.86	384.70	6	3869.14	36.23	125.12	711
5	461+00.00	471+00.00	10	5011	5516	0	3.64	3.64	4.04	0.98	438.89	2	522.22	4.70	0.00	104
6	471+00.00	481+00.00	10	2721	6779	0	2.90	2.90	3.23	0.78	350.53	0	0.00	0.00	0.00	0
7	481+00.00	491+00.00	10	6147	605	72873	3.19	3.19	3.55	0.86	385.19	0	0.00	0.00	0.00	0
8	491+00.00	500+00.00	9	8960	1674	40951	1.80	1.80	2.00	0.48	216.94	9	3516.88	33.48	162.66	625
9	500+00.00	510+00.00	10	2095	7382	40352	2.76	2.76	3.06	0.74	332.76	6	2345.16	22.93	162.66	391
10	510+00.00	513+60.00	3.6	1111	23	7811	0.19	0.19	0.21	0.05	23.33	0	0.00	0.00	0.00	0
LOOP 20 - MAINLANES																
1	406+00.31	412+00.00	0	6	20124	0	0.78	0.78	0.87	0.21	94.48	7	3311.42	29.81	0.00	658
2	412+00.00	421+90.00	0	5650	61676	0	5.06	5.06	5.62	1.36	610.45	6	10303.20	92.74	0.00	2049
GRAND CENTRAL ROAD																
1	10+00.00	14+98.44	0	9653	0	0	2.15	2.15	2.39	0.58	259.83	4	4983.07	47.06	197.06	900
LOOP 20/McPHERSON INTERSECTION																
1			0	8952	244	0	1.66	1.66	1.84	0.45	199.80	0	11879.53	106.93	0.00	2361
McPHERSON ROAD																
1	1+79.29	9+75.00	8.0	1028	166	0	0.95	0.95	1.05	0.25	114.30	0	1078.54	12.06	210.33	117
2	9+75.00	18+20.36	8.5	898	172	0	0.94	0.94	1.05	0.25	113.64	0	1077.11	11.94	200.47	122
RAMP A																
1			0	0	0	0	3.08	3.08	3.42	0.83	371.76	1	1958.14	17.62	0.00	389
RAMP B																
1			0	0	0	0	4.02	4.02	4.46	1.08	484.66	1	1585.42	14.27	0.00	315
RAMP H																
1	100+70.14	107+00.00	0	0	0	0	2.55	2.55	2.83	0.69	307.63	2	2659.41	23.94	0.00	529
2	107+00.00	113.93.15	0	0	0	0	3.91	3.91	4.35	1.05	472.39	2	1601.30	14.41	0.00	319
DIRECT CONNECTOR 1																
1	317+26.90	323+00.00	0	0	0	0	1.01	1.01	1.12	0.27	121.33	4	1770.02	15.93	0.00	352
2	323+00.00	333+00.00	0	0	0	0	0.23	0.23	0.25	0.06	27.53	2	533.70	6.06	112.61	54
DIRECT CONNECTOR 2																
6	366+00.00	376+00.00	0	0	0	0	0.88	0.88	0.98	0.24	106.70	4	2051.48	19.73	112.61	356
7	376+00.00	380+31.81	0	0	0	0	0.78	0.78	0.87	0.21	94.45	4	1268.66	11.42	0.00	252
TOTALS			101.00	421542	108018	161987	79.27	79.27	88.05	21.29	9361.87	127	94770.40	874.20	1893.23	17970

STATE OF TEXAS
CHARLES M. SHINE
62999
REGISTERED PROFESSIONAL ENGINEER

The seal appearing on this document was authorized by Charles Shine P.E. 62999, on June 3, 1999.

DATE	BY	REV	REVISION
6/3/99	DV	01	QUANTITIES

© 1999 Texas Department of Transportation

Brown & Root
HOUSTON, TEXAS

LOOP 20

SUMMARY OF ROADWAY QUANTITIES

SHEET 1 OF 4

FED RD DIV NO	STATE PROJECT NO	SHEET NO
6	C86-14-23	42

STATE	STATE DIST NO	COUNTY
TEXAS	22	WEBB

CONT	SECT	JOB	HIGHWAY NO
0086	14	023	LOOP 20

SEE REVISION
REV. 6-25-99

D03GSX05.DGN-08 06-07-99 BAR_HO_ES05 \HOIVIL\CF0039\PHASE2

CSJ 0086-14-023

SUMMARY OF LOOP 20 ROADWAY QUANTITIES

ITEM NO. - DESCRIPTION			100-502	110-501	132-509	132-512	164-507	164-508	164-554	166-509	168-501	204-503	260-510	260-514	276-628	314-502
LOCATION			PREP ROW	EXCAVATION (RDWY)	EMBANK (DENS CONT) (TY C) (CL 3)	EMBANK (DENS CONT) (TY D) (CL 3)	STND SEED FOR COOL SEASON TMP ERSN CNT	STND SEED FOR WARM SEASON TMP ERSN CNT	CELL FIB SEED (PERM) (RURAL)(CLAY)	FERT (13-13-13)	VEG WATER	SPRINKILING (DUST CONTROL)	LIME TREAT SUBGR (DC) (8 IN)	LIME (TY A SLURRY) OR (TY B)	CEM TRT BS (STR-O)TY D1 OR D2(GR6)(CL6) VAR DEPTH	EMULS ASPH (BS OR SUBGR TRT) (MS-2)
SHEET NO.	BEGINNING STATION	ENDING STATION	STA	CY	CY	CY	AC	AC	AC	TON	MG	MG	SY	TON	CY	GAL
LOOP 20 - EB FRONTAGE ROAD																
1	426+50.83	431+00.00	0	0	0 *	0 *	0	0	0	0	0	0	0	0	0.00	0
2	431+00.00	443+00.00	0	0	0 *	0 *	1.65	1.65	1.84	0.44	199.67	7	2664.44	23.98	0.00	529
3	443+00.00	453+00.00	0	0	0 *	0 *	4.72	4.72	5.25	1.27	570.00	6	3948.89	35.54	0.00	785
4	453+00.00	463+00.00	0	0	0 *	0 *	4.74	4.74	5.26	1.27	571.72	6	3932.16	36.37	87.58	742
5	463+00.00	473+00.00	0	0	0 *	0 *	3.55	3.55	3.94	0.95	427.78	4	4731.11	42.58	0.00	941
6	473+00.00	483+00.00	0	0	0 *	0 *	3.48	3.48	3.86	0.93	419.37	8	5641.64	50.78	0.00	1122
7	483+00.00	493+00.00	0	0	0 *	0 *	3.64	3.64	4.04	0.98	439.28	2	4722.22	42.50	0.00	939
8	493+00.00	500+70.00	0	0	0 *	0 *	3.66	3.66	4.06	0.98	441.30	11	2888.38	29.24	290.06	441
LOOP 20 - WB FRONTAGE ROAD																
1	429+13.30	431+00.00	1.9	14446	3298	0	0.35	0.35	0.39	0.09	41.97	7	1953.53	20.18	232.07	282
2	431+00.00	441+00.00	10	62534	5	0	2.54	2.54	2.82	0.68	306.73	5	3100.30	27.91	0.00	616
3	441+00.00	451+00.00	10	205927	0	15	5.27	5.27	5.80	1.39	605.00	8	4873.33	43.86	0.00	969
4	451+00.00	461+00.00	10	72285	356	43	3.19	3.19	3.49	0.82	359.00	6	3869.14	36.23	125.12	711
5	461+00.00	471+00.00	10	5011	5516	0	3.64	3.64	4.04	0.98	438.89	2	522.22	4.70	0.00	104
6	471+00.00	481+00.00	10	2721	6779	0	2.90	2.90	3.23	0.78	350.53	0	0.00	0.00	0.00	0
7	481+00.00	491+00.00	10	6147	605	72873	3.19	3.19	3.55	0.86	385.19	0	0.00	0.00	0.00	0
8	491+00.00	500+00.00	9	8960	1674	40951	1.80	1.80	2.00	0.48	216.94	9	3516.88	33.48	162.66	625
9	500+00.00	510+00.00	10	2095	7382	40352	2.76	2.76	3.06	0.74	332.76	6	2345.16	22.93	162.66	391
10	510+00.00	513+60.00	3.6	1111	23	7811	0.19	0.19	0.21	0.05	23.33	0	0.00	0.00	0.00	0
LOOP 20 - MAINLANES																
1	406+00.31	412+00.00	0	6	20124	0	0.78	0.78	0.87	0.21	94.48	7	3311.42	29.81	0.00	658
2	412+00.00	421+90.00	0	5650	61676	0	5.06	5.06	5.62	1.36	610.45	6	10303.20	92.74	0.00	2049
GRAND CENTRAL ROAD																
1	10+00.00	14+98.44	0	7505	21	0	2.15	2.15	2.39	0.58	259.83	4	4983.07	47.06	197.06	900
LOOP 20/McPHERSON INTERSECTION																
1			0	8952	244	0	1.66	1.66	1.84	0.45	199.80	0	11879.53	106.93	0.00	2361
McPHERSON ROAD																
1	1+79.29	9+75.00	8.0	1028	166	0	0.95	0.95	1.05	0.25	114.30	0	1078.54	12.06	210.33	117
2	9+75.00	18+20.36	8.5	898	172	0	0.94	0.94	1.05	0.25	113.64	0	1077.11	11.94	200.47	122
RAMP A																
1			0	0	0 *	0	3.08	3.08	3.42	0.83	371.76	1	1958.14	17.62	0.00	389
RAMP B																
1			0	0	0 *	0	4.02	4.02	4.46	1.08	484.66	1	1585.42	14.27	0.00	315
RAMP H																
1	100+70.14	107+00.00	0	0	0 *	0	2.55	2.55	2.83	0.69	307.63	2	2659.41	23.94	0.00	529
2	107+00.00	113.93.15	0	0	0 *	0	3.91	3.91	4.35	1.05	472.39	2	1601.30	14.41	0.00	319
DIRECT CONNECTOR 1																
1	317+26.90	323+00.00	0	0	0 **	0	1.01	1.01	1.12	0.27	121.33	4	1770.02	15.93	0.00	352
2	323+00.00	333+00.00	0	0	0 **	0	0.23	0.23	0.25	0.06	27.53	2	533.70	6.06	112.61	54
DIRECT CONNECTOR 2																
6	366+00.00	376+00.00	0	0	0 **	0	0.88	0.88	0.98	0.24	106.70	4	2051.48	19.73	112.61	356
7	376+00.00	380+31.81	0	0	0 **	0	0.78	0.78	0.87	0.21	94.45	4	1268.66	11.42	0.00	252
TOTALS			101.00	405276	108041	161987	79.27	79.27	88.05	21.29	9361.87	127	94770.40	874.20	1893.23	17970

* QUANTITY ACCOUNTED FOR IN LOOP 20 WB FRTG ROAD
** QUANTITY ACCOUNTED FOR IN LOOP 20 MAINLANES

STATE OF TEXAS
RUDY L. GOMEZ
58664
REGISTERED PROFESSIONAL ENGINEER

The seal appearing on this document was authorized by Rudy L. Gomez P.E. 58664, on September 30, 1999.

DATE	BY	REV	REVISION
6/3/99	DV	01	QUANTITIES

© 1999 Texas Department of Transportation

Brown & Root
HOUSTON, TEXAS

LOOP 20

SUMMARY OF ROADWAY QUANTITIES

SHEET 1 OF 4

FED RD DIV NO	STATE PROJECT NO	SHEET NO
6	C86-14-23	42

STATE	STATE DIST NO	COUNTY
TEXAS	22	WEBB

CONT	SECT	JOB	HIGHWAY NO
0086	14	023	LOOP 20

SEE REVISION

REF FILE(S): J01LOX01.BDR LV ON - 16,45,42,57,58,60-62

D03QSX05.DGN-09 06-07-99 BAR_HO_ES05 \HCIVIL\CF0039\PHASE2

CSJ 0086-14-023

SUMMARY OF LOOP 20 ROADWAY QUANTITIES

ITEM NO. - DESCRIPTION			100-502	110-501	132-509	132-512	164-507	164-508	164-554	166-509	168-501	204-503	260-510	260-514	276-628	314-502
LOCATION			PREP ROW	EXCAVATION (RDWY)	EMBANK (DENS CONT) (TY C) (CL 3)	EMBANK (DENS CONT) (TY D) (CL 3)	STND SEED FOR COOL SEASON TMP ERSN CNT	STND SEED FOR WARM SEASON TMP ERSN CNT	CELL FIB SEED (PERM) (RURAL)(CLAY)	FERT (13-13-13)	VEG WATER	SPRINKILING (DUST CONTROL)	LIME TREAT SUBGR (DC) (8 IN)	LIME (TY A SLURRY) OR (TY B)	CEM TRT BS (STR-O)TY D1 OR D2(GR6)(CL6) VAR DEPTH	EMULS ASPH (BS OR SUBGR TRT) (MS-2)
SHEET NO.	BEGINNING STATION	ENDING STATION	STA	CY	CY	CY	AC	AC	AC	TON	MG	MG	SY	TON	CY	GAL
LOOP 20 - EB FRONTAGE ROAD																
1	426+50.83	431+00.00	0	0	0 *	0 *	0	0	0	0	0	0	0	0	0.00	0
2	431+00.00	443+00.00	0	0	0 *	0 *	1.65	1.65	1.84	0.44	199.67	7	2664.44	23.98	0.00	529
3	443+00.00	453+00.00	0	0	0 *	0 *	4.72	4.72	5.25	1.27	570.00	6	3948.89	35.54	0.00	785
4	453+00.00	463+00.00	0	0	0 *	0 *	4.74	4.74	5.26	1.27	571.72	6	3932.16	36.37	87.58	742
5	463+00.00	473+00.00	0	0	0 *	0 *	3.55	3.55	3.94	0.95	427.78	4	4731.11	42.58	0.00	941
6	473+00.00	483+00.00	0	0	0 *	0 *	3.48	3.48	3.86	0.93	419.37	8	5641.64	50.78	0.00	1122
7	483+00.00	493+00.00	0	0	0 *	0 *	3.64	3.64	4.04	0.98	439.28	2	4722.22	42.50	0.00	939
8	493+00.00	500+70.00	0	0	0 *	0 *	3.66	3.66	4.06	0.98	441.30	11	2888.38	29.24	290.06	441
LOOP 20 - WB FRONTAGE ROAD																
1	429+13.30	431+00.00	1.9	14446	3298	0	0.35	0.35	0.39	0.09	41.97	7	1953.53	20.18	232.07	282
2	431+00.00	441+00.00	10	62534	5	0	2.54	2.54	2.82	0.68	306.73	5	3100.30	27.91	0.00	616
3	441+00.00	451+00.00	10	205927	0	15	5.27	5.27	5.80	1.39	605.00	8	4873.33	43.86	0.00	969
4	451+00.00	461+00.00	10	72285	356	43	3.19	3.19	3.49	0.82	359.00	6	3869.14	36.23	125.12	711
5	461+00.00	471+00.00	10	5011	5516	0	3.64	3.64	4.04	0.98	438.89	2	522.22	4.70	0.00	104
6	471+00.00	481+00.00	10	2721	6779	0	2.90	2.90	3.23	0.78	350.53	0	0.00	0.00	0.00	0
7	481+00.00	491+00.00	10	6147	605	72873	3.19	3.19	3.55	0.86	385.19	0	0.00	0.00	0.00	0
8	491+00.00	500+00.00	9	8960	1674	40951	1.80	1.80	2.00	0.48	216.94	9	3516.88	33.48	162.66	625
9	500+00.00	510+00.00	10	2095	7382	40352	2.76	2.76	3.06	0.74	332.76	6	2345.16	22.93	162.66	391
10	510+00.00	513+60.00	3.6	1111	23	7811	0.19	0.19	0.21	0.05	23.33	0	0.00	0.00	0.00	0
LOOP 20 - MAINLANES																
1	406+00.31	412+00.00	0	6	20124	0	0.78	0.78	0.87	0.21	94.48	7	3311.42	29.81	0.00	658
2	412+00.00	421+90.00	0	5650	61676	0	5.06	5.06	5.62	1.36	610.45	6	10303.20	92.74	0.00	2049
GRAND CENTRAL ROAD																
1	10+00.00	14+98.44	0	7505	21	0	2.15	2.15	2.39	0.58	259.83	4	4983.07	47.06	197.06	900
LOOP 20/McPHERSON INTERSECTION																
1			0	8952	244	0	1.66	1.66	1.84	0.45	199.80	0	11879.53	106.93	0.00	2361
McPHERSON ROAD																
1	1+79.29	9+75.00	8.0	1028	166	0	0.95	0.95	1.05	0.25	114.30	0	1078.54	12.06	210.33	117
2	9+75.00	18+20.36	8.5	898	172	0	0.94	0.94	1.05	0.25	113.64	0	1077.11	11.94	200.47	122
RAMP A																
1			0	0	0 *	0	3.08	3.08	3.42	0.83	371.76	1	1958.14	17.62	0.00	389
RAMP B																
1			0	0	0 *	0	4.02	4.02	4.46	1.08	484.66	1	1585.42	14.27	0.00	315
RAMP H																
1	100+70.14	107+00.00	0	0	0 *	0	2.55	2.55	2.83	0.69	307.63	2	2659.41	23.94	0.00	529
2	107+00.00	113.93.15	0	0	0 *	0	3.91	3.91	4.35	1.05	472.39	2	1601.30	14.41	0.00	319
DIRECT CONNECTOR 1																
1	317+26.90	323+00.00	0	0	0 **	0	1.01	1.01	1.12	0.27	121.33	4	1770.02	15.93	0.00	352
2	323+00.00	333+00.00	0	0	0 **	0	0.23	0.23	0.25	0.06	27.53	2	533.70	6.06	112.61	54
DIRECT CONNECTOR 2																
6	366+00.00	376+00.00	0	0	0 **	0	0.88	0.88	0.98	0.24	106.70	4	2051.48	19.73	112.61	356
7	376+00.00	380+31.81	0	0	0 **	0	0.78	0.78	0.87	0.21	94.45	4	1268.66	11.42	0.00	252
TOTALS			101.00	421542	108018	161987	79.27	79.27	88.05	21.29	9361.87	127	94770.40	874.20	1893.23	17970

* QUANTITY ACCOUNTED FOR IN LOOP 20 WB FRTG ROAD

** QUANTITY ACCOUNTED FOR IN LOOP 20 MAINLANES

STATE OF TEXAS
CHARLES M. SHINE
62999
REGISTERED PROFESSIONAL ENGINEER

The seal appearing on this document was authorized by Charles Shine P.E. 62999, on September 30, 1999.

DATE	BY	REV	REVISION
6/3/99	DV	01	QUANTITIES
9/29/99	RS	02	QUANTITIES

© 1999 Texas Department of Transportation

Brown & Root
HOUSTON, TEXAS

LOOP 20

SUMMARY OF ROADWAY QUANTITIES

SHEET 1 OF 4

FED RD DIV NO	STATE PROJECT NO	SHEET NO
6	C86-14-23	42

STATE	STATE DIST NO	COUNTY
TEXAS	22	WEBB

CONT	SECT	JOB	HIGHWAY NO
0086	14	023	LOOP 20

REF FILE(S): J01LOX01.DGN LV ON = 16,45,42,57,58,60-62
D03QSX05.DGN-09 06-07-99 BAR_HO_ES05 \HCIVIL\CF0039\PHASE2

CSJ 0086-14-023

SUMMARY OF LOOP 20 ROADWAY QUANTITIES

ITEM NO. - DESCRIPTION			354-507	360-507	432-524	442-515	450-	450-526	450-694	514-517	529-505	529-510
LOCATION			PLANE ASPH CONC PAV (0-1 IN)	CONC PAV (CONT REINF HY STL) (12 IN)	RIPRAP CONC (CL B) (4 IN)	STR STL-HYC (WF TERM ANCH)	RAIL (TY SSTR) W/ DRAIN SLOTS	SINGLE SLOLPE TRAFFIC RAIL (SSTR)	RAIL (PR1) (MOD)	PERM CNC TRF BAR SGL SLP (TY 2)(H=42 IN)	CONC CURB (DOWEL) (6 IN)	CONC CURB (TY II) (MONO)
SHEET NO.	BEGINNING STATION	ENDING STATION	SY	SY	CY	LB	LF	LF	LF	LF	LF	LF
LOOP 20 - EB FRONTAGE ROAD												
1	426+50.83	431+00.00	0.00	0.00	0.00	0.00	0.00	0.00	0.00	0.00	262.47	0.00
2	431+00.00	443+00.00	0.00	2455.07	0.00	0.00	0.00	0.00	0.00	0.00	0.00	1130.00
3	443+00.00	453+00.00	0.00	3504.44	0.00	0.00	0.00	0.00	0.00	0.00	0.00	2000.00
4	453+00.00	463+00.00	0.00	1897.78	0.00	2802.30	0.00	0.00	0.00	0.00	0.00	1300.00
5	463+00.00	473+00.00	0.00	0.00	0.00	0.00	0.00	0.00	100.00	0.00	0.00	0.00
6	473+00.00	483+00.00	0.00	0.00	0.00	0.00	0.00	0.00	100.00	0.00	0.00	0.00
7	483+00.00	493+00.00	0.00	0.00	0.00	0.00	0.00	0.00	0.00	0.00	0.00	0.00
8	493+00.00	500+70.00	0.00	1879.31	0.00	9394.28	0.00	0.00	0.00	0.00	0.00	996.00
LOOP 20 - WB FRONTAGE ROAD												
1	429+13.30	431+00.00	0.00	1317.29	5.19	7236.91	0.00	0.00	0.00	0.00	0.00	614.07
2	431+00.00	441+00.00	0.00	2834.70	0.00	0.00	0.00	0.00	0.00	0.00	0.00	1000.00
3	441+00.00	451+00.00	0.00	4473.33	0.00	0.00	0.00	0.00	0.00	0.00	0.00	1800.00
4	451+00.00	461+00.00	0.00	2800.31	0.00	3984.42	0.00	0.00	0.00	0.00	0.00	1340.12
5	461+00.00	471+00.00	0.00	0.00	0.00	0.00	0.00	0.00	85.00	0.00	0.00	0.00
6	471+00.00	481+00.00	0.00	0.00	0.00	0.00	0.00	0.00	0.00	0.00	0.00	0.00
7	481+00.00	491+00.00	0.00	0.00	0.00	0.00	0.00	0.00	60.00	0.00	0.00	0.00
8	491+00.00	500+00.00	0.00	1779.56	0.00	5166.54	0.00	0.00	0.00	0.00	0.00	696.00
9	500+00.00	510+00.00	0.00	173.33	0.00	5166.54	0.00	0.00	0.00	0.00	0.00	140.00
10	510+00.00	513+60.00	2200.00	0.00	0.00	0.00	0.00	0.00	0.00	0.00	0.00	0.00
LOOP 20 - MAINLANES												
1	406+00.31	412+00.00	0.00	3113.22	1.93	0.00	891.90	0.00	0.00	292.21	0.00	0.00
2	412+00.00	421+90.00	0.00	9863.20	0.00	0.00	1190.00	790.00	0.00	990.00	0.00	0.00
GRAND CENTRAL ROAD												
1	10+00.00	14+98.44	0.00	1789.68	0.00	6250.15	0.00	0.00	0.00	0.00	0.00	464.99
LOOP 20/McPHERSON INTERSECTION												
1			0.00	10660.70	0.00	0.00	0.00	0.00	0.00	0.00	0.00	4320.64
McPHERSON ROAD												
1	1+79.29	9+75.00	31076.83	0.00	0.00	6510.89	0.00	0.00	0.00	0.00	0.00	242.56
2	9+75.00	18+20.36	31051.28	0.00	0.00	6121.78	0.00	0.00	0.00	0.00	0.00	258.13
RAMP A												
1			0.00	1678.65	0.00	0.00	418.55	418.55	0.00	0.00	0.00	378.90
RAMP B												
1			0.00	1328.83	0.00	0.00	229.68	229.68	0.00	0.00	0.00	476.04
RAMP H												
1	100+70.14	107+00.00	0.00	0.00	0.00	0.00	0.00	0.00	0.00	0.00	0.00	0.00
2	107+00.00	113.93.15	0.00	0.00	0.00	0.00	0.00	0.00	0.00	0.00	0.00	0.00
DIRECT CONNECTOR 1												
1	317+26.90	323+00.00	0.00	1897.38	22.00	0.00	0.00	973.10	0.00	0.00	0.00	0.00
2	323+00.00	333+00.00	0.00	290.89	4.32	3590.38	0.00	234.00	0.00	0.00	0.00	0.00
DIRECT CONNECTOR 2												
6	366+00.00	376+00.00	0.00	1904.22	18.71	3590.38	0.00	1094.00	0.00	0.00	0.00	0.00
7	376+00.00	380+31.81	0.00	1343.41	0.00	0.00	0.00	863.62	0.00	0.00	0.00	0.00
TOTALS			64328.11	56985.30	52.15	59814.57	2730.13	4602.95	345.00	1282.21	262.47	17157.45

REV. 6-25-99

STATE OF TEXAS
CHARLES M. SHINE
P.E. 62999
REGISTERED PROFESSIONAL ENGINEER

The seal appearing on this document was authorized by Charles Shine P.E. 62999, on June 3, 1999.

DATE	BY	REV	REVISION
6/3/99	DV	01	QUANTITIES

© 1999 Texas Department of Transportation

Brown & Root
HOUSTON, TEXAS

LOOP 20

SUMMARY OF ROADWAY QUANTITIES

SHEET 2 OF 4

FED RD DIV NO	STATE PROJECT NO	SHEET NO
6	C86-14-23	43

STATE	STATE DIST NO	COUNTY
TEXAS	22	WEBB

CONT	SECT	JOB	HIGHWAY NO
0086	14	023	LOOP 20

D03GSX06.DGN-05 06-02-99 BAR_HO_ES05 \HCIVIL\CF0039\PHASE2

CSJ 0086-14-023

SUMMARY OF LOOP 20 ROADWAY QUANTITIES

ITEM NO. - DESCRIPTION			529-529	531-507	531-541	540-505	540-506	531-542	550-501	3028-501
LOCATION			CONC CURB & GUTTER (TY II)(6 IN)	CONC SDWLK (4 IN)	CONC SDWLK (WHCHR RAMP) TYPE A	TERM ANCHOR SECT (12 GA)	MTL BM GD FENCE (12 GA) (TIM POST)	CONC SDWLK (WHCHR RAMP) TYPE B	CHAIN LINK FENCE (6')	EXCAV (WIDE FLANG ANCH)
SHEET NO.	BEGINNING STATION	ENDING STATION	LF	SY	EA	EA	LF	EA	LF	CY
LOOP 20 - EB FRONTAGE ROAD										
1	426+50.83	431+00.00	0.00	249.54	0	0	0	0		0.00
2	431+00.00	443+00.00	0.00	284.67	2	0	0	0		0.00
3	443+00.00	453+00.00	0.00	611.11	0	0	0	0		0.00
4	453+00.00	463+00.00	350.00	611.11	0	0	0	0		67.48
5	463+00.00	473+00.00	1000.00	611.11	0	1	225	0		0.00
6	473+00.00	483+00.00	1107.22	589.76	0	1	150	0		0.00
7	483+00.00	493+00.00	1000.00	611.11	0	0	0	0		0.00
8	493+00.00	500+70.00	40.00	280.51	0	0	0	0		223.48
LOOP 20 - WB FRONTAGE ROAD										
1	429+13.30	431+00.00	0.00	103.72	0	0	0	0		178.80
2	431+00.00	441+00.00	0.00	331.99	0	0	0	0		0.00
3	441+00.00	451+00.00	0.00	550.00	0	0	0	0		0.00
4	451+00.00	461+00.00	200.00	470.59	0	0	0	0	778.60	96.40
5	461+00.00	471+00.00	1100.00	611.11	0	0	0	0	359.77	0.00
6	471+00.00	481+00.00	1000.00	554.72	0	0	0	0		0.00
7	481+00.00	491+00.00	1000.00	611.11	0	0	0	0		0.00
8	491+00.00	500+00.00	450.00	359.33	0	0	0	0		125.32
9	500+00.00	510+00.00	490.00	42.78	0	0	0	0		125.32
10	510+00.00	513+60.00	0.00	0.00	0	0	0	0		0.00
LOOP 20 - MAINLANES										
1	406+00.31	412+00.00	0.00	0.00	0	0	0	0		0.00
2	412+00.00	421+90.00	0.00	0.00	0	0	0	0		0.00
GRAND CENTRAL ROAD										
1	10+00.00	14+98.44	766.88	208.82	0	0	0	4	325.25	151.83
LOOP 20/McPHERSON INTERSECTION										
1			0.00	448.49	0	0	0	20		0.00
McPHERSON ROAD										
1	1+79.29	9+75.00	851.42	668.54	0	0	0	0		162.05
2	9+75.00	18+20.36	850.72	677.63	0	0	0	0		154.46
RAMP A										
1			0.00	0.00	0	0	200	0		0.00
RAMP B										
1			0.00	0.00	0	2	400	0		0.00
RAMP H										
1	100+70.14	107+00.00	0.00	0.00	0	0	0	0		0.00
2	107+00.00	113.93.15	0.00	0.00	0	0	0	0		0.00
DIRECT CONNECTOR 1										
1	317+26.90	323+00.00	0.00	0.00	0	0	175	0		0.00
2	323+00.00	333+00.00	0.00	0.00	0	0	0	0		86.76
DIRECT CONNECTOR 2										
6	366+00.00	376+00.00	0.00	0.00	0	0	0	0		86.76
7	376+00.00	380+31.81	0.00	0.00	0	1	50	0		0.00
TOTALS			10206.24	9487.75	2	5	1,200	24	1463.62	1458.66

STATE OF TEXAS
CHARLES M. SHINE
P.E. 62999
REGISTERED PROFESSIONAL ENGINEER

The seal appearing on this document was authorized by Charles Shine P.E. 62999, on June 3, 1999.

DATE	BY	REV	REVISION
6/3/99	DV	01	QUANTITIES

© 1999 Texas Department of Transportation

Brown & Root
HOUSTON, TEXAS

LOOP 20

SUMMARY OF ROADWAY QUANTITIES

SHEET 3 OF 4

FED RD DIV NO	STATE PROJECT NO	SHEET NO
6	C86-14-23	44

STATE	STATE DIST NO	COUNTY
TEXAS	22	WEBB

CONT	SECT	JOB	HIGHWAY NO
0086	14	023	LOOP 20

D030SX07.DGN-05 06-07-99 BAR_HO_ES05 \HCIVIL\CF0039\PHASE2

SEE REVISION
REV. 6-25-99

CSJ 0086-14-023

SUMMARY OF LOOP 20 ROADWAY QUANTITIES

ITEM NO. - DESCRIPTION			529-529	531-507	531-541	540-505	540-506	531-542	550-501	3028-501
LOCATION			CONC CURB & GUTTER (TY II)(6 IN)	CONC SDWLK (4 IN)	CONC SDWLK (WHCHR RAMP) TYPE A	TERM ANCHOR SECT (12 GA)	MTL BM GD FENCE (12 GA) (TIM POST)	CONC SDWLK (WHCHR RAMP) TYPE B	CHAIN LINK FENCE (6')	EXCAV (WIDE FLANG ANCH)
SHEET NO.	BEGINNING STATION	ENDING STATION	LF	SY	EA	EA	LF	EA	LF	CY
LOOP 20 - EB FRONTAGE ROAD										
1	426+50.83	431+00.00	0.00	249.54	0	0	0	0		0.00
2	431+00.00	443+00.00	0.00	284.67	2	0	0	0		0.00
3	443+00.00	453+00.00	0.00	611.11	0	0	0	0		0.00
4	453+00.00	463+00.00	350.00	611.11	0	0	0	0		67.48
5	463+00.00	473+00.00	1000.00	611.11	0	1	225	0		0.00
6	473+00.00	483+00.00	1107.22	589.76	0	1	150	0		0.00
7	483+00.00	493+00.00	1000.00	611.11	0	0	0	0		0.00
8	493+00.00	500+70.00	40.00	280.51	0	0	0	0		223.48
LOOP 20 - WB FRONTAGE ROAD										
1	429+13.30	431+00.00	0.00	103.72	0	0	0	0		178.80
2	431+00.00	441+00.00	0.00	331.99	0	0	0	0		0.00
3	441+00.00	451+00.00	0.00	772.00	0	0	0	0		0.00
4	451+00.00	461+00.00	200.00	690.00	0	0	0	0	778.60	96.40
5	461+00.00	471+00.00	1100.00	611.11	0	0	0	0	359.77	0.00
6	471+00.00	481+00.00	1000.00	554.72	0	0	0	0		0.00
7	481+00.00	491+00.00	1000.00	611.11	0	0	0	0		0.00
8	491+00.00	500+00.00	450.00	359.33	0	0	0	0		125.32
9	500+00.00	510+00.00	490.00	42.78	0	0	0	0		125.32
10	510+00.00	513+60.00	0.00	0.00	0	0	0	0		0.00
LOOP 20 - MAINLANES										
1	406+00.31	412+00.00	0.00	0.00	0	0	0	0		0.00
2	412+00.00	421+90.00	0.00	0.00	0	0	0	0		0.00
GRAND CENTRAL ROAD										
1	10+00.00	14+98.44	766.88	436.00	0	0	0	4	775.00	151.83
LOOP 20/McPHERSON INTERSECTION										
1			0.00	448.49	0	0	0	20		0.00
McPHERSON ROAD										
1	1+79.29	9+75.00	851.42	668.54	0	0	0	0		162.05
2	9+75.00	18+20.36	850.72	677.63	0	0	0	0		154.46
RAMP A										
1			0.00	0.00	0	0	200	0		0.00
RAMP B										
1			0.00	0.00	0	2	400	0		0.00
RAMP H										
1	100+70.14	107+00.00	0.00	0.00	0	0	0	0		0.00
2	107+00.00	113.93.15	0.00	0.00	0	0	0	0		0.00
DIRECT CONNECTOR 1										
1	317+26.90	323+00.00	0.00	0.00	0	0	175	0		0.00
2	323+00.00	333+00.00	0.00	0.00	0	0	0	0		86.76
DIRECT CONNECTOR 2										
6	366+00.00	376+00.00	0.00	0.00	0	0	0	0		86.76
7	376+00.00	380+31.81	0.00	0.00	0	1	50	0		0.00
TOTALS			10206.24	10156.34	2	5	1,200	24	1913.37	1458.66

STATE OF TEXAS
RUDY L. GOMEZ
58664
REGISTERED PROFESSIONAL ENGINEER

The seal appearing on this document was authorized by Rudy L. Gomez P.E. 58664, on September 30, 1999.

DATE	BY	REV	REVISION
6/3/99	DV	01	QUANTITIES

© 1999 Texas Department of Transportation

Brown & Root
HOUSTON, TEXAS

LOOP 20

SUMMARY OF ROADWAY QUANTITIES

SHEET 3 OF 4

FED RD DIV NO	STATE PROJECT NO		SHEET NO
6	C86-14-23		44
STATE	STATE DIST NO	COUNTY	
TEXAS	22	WEBB	
CONT	SECT	JOB	HIGHWAY NO
0086	14	023	LOOP 20

D03QSX07.DGN-05 06-07-99 BAR_HO_ES05 \HCIVIL\CF0039\PHASE2

SEE REVISION

CSJ 0086-14-023

SUMMARY OF LOOP 20 ROADWAY QUANTITIES

ITEM NO. - DESCRIPTION			529-529	531-507	531-541	540-505	540-506	531-542	550-501	3028-501
LOCATION			CONC CURB & GUTTER (TY II)(6 IN)	CONC SDWLK (4 IN)	CONC SDWLK (WHCHR RAMP) TYPE A	TERM ANCHOR SECT (12 GA)	MTL BM GD FENCE (12 GA) (TIM POST)	CONC SDWLK (WHCHR RAMP) TYPE B	CHAIN LINK FENCE (6')	EXCAV (WIDE FLANG ANCH)
SHEET NO.	BEGINNING STATION	ENDING STATION	LF	SY	EA	EA	LF	EA	LF	CY
LOOP 20 - EB FRONTAGE ROAD										
1	426+50.83	431+00.00	0.00	249.54	0	0	0	0		0.00
2	431+00.00	443+00.00	0.00	284.67	2	0	0	0		0.00
3	443+00.00	453+00.00	0.00	611.11	0	0	0	0		0.00
4	453+00.00	463+00.00	350.00	611.11	0	0	0	0		67.48
5	463+00.00	473+00.00	1000.00	611.11	0	1	225	0		0.00
6	473+00.00	483+00.00	1107.22	589.76	0	1	150	0		0.00
7	483+00.00	493+00.00	1000.00	611.11	0	0	0	0		0.00
8	493+00.00	500+70.00	40.00	280.51	0	0	0	0		223.48
LOOP 20 - WB FRONTAGE ROAD										
1	429+13.30	431+00.00	0.00	103.72	0	0	0	0		178.80
2	431+00.00	441+00.00	0.00	331.99	0	0	0	0		0.00
3	441+00.00	451+00.00	0.00	772.00	0	0	0	0		0.00
4	451+00.00	461+00.00	200.00	690.00	0	0	0	0	778.60	96.40
5	461+00.00	471+00.00	1100.00	611.11	0	0	0	0	359.77	0.00
6	471+00.00	481+00.00	1000.00	554.72	0	0	0	0		0.00
7	481+00.00	491+00.00	1000.00	611.11	0	0	0	0		0.00
8	491+00.00	500+00.00	450.00	359.33	0	0	0	0		125.32
9	500+00.00	510+00.00	490.00	42.78	0	0	0	0		125.32
10	510+00.00	513+60.00	0.00	0.00	0	0	0	0		0.00
LOOP 20 - MAINLANES										
1	406+00.31	412+00.00	0.00	0.00	0	0	0	0		0.00
2	412+00.00	421+90.00	0.00	0.00	0	0	0	0		0.00
GRAND CENTRAL ROAD										
1	10+00.00	14+98.44	766.88	436.00	0	0	0	4	775.00	151.83
LOOP 20/McPHERSON INTERSECTION										
1			0.00	448.49	0	0	0	20		0.00
McPHERSON ROAD										
1	1+79.29	9+75.00	851.42	668.54	0	0	0	0		162.05
2	9+75.00	18+20.36	850.72	677.63	0	0	0	0		154.46
RAMP A										
1			0.00	0.00	0	0	200	0		0.00
RAMP B										
1			0.00	0.00	0	2	400	0		0.00
RAMP H										
1	100+70.14	107+00.00	0.00	0.00	0	0	0	0		0.00
2	107+00.00	113.93.15	0.00	0.00	0	0	0	0		0.00
DIRECT CONNECTOR 1										
1	317+26.90	323+00.00	0.00	0.00	0	0	175	0		0.00
2	323+00.00	333+00.00	0.00	0.00	0	0	0	0		86.76
DIRECT CONNECTOR 2										
6	366+00.00	376+00.00	0.00	0.00	0	0	0	0		86.76
7	376+00.00	380+31.81	0.00	0.00	0	1	50	0		0.00
TOTALS			10206.24	9487.75	2	5	1.200	24	1463.62	1458.66

STATE OF TEXAS
CHARLES M. SHINE
62999
REGISTERED PROFESSIONAL ENGINEER

The seal appearing on this document was authorized by Charles Shine P.E. 62999, on September 30, 1999.

DATE	BY	REV	REVISION
6/3/99	DV	01	QUANTITIES
9/29/99	RS	02	QUANTITIES

© 1999 Texas Department of Transportation

Brown & Root
HOUSTON, TEXAS

LOOP 20

SUMMARY OF ROADWAY QUANTITIES

SHEET 3 OF 4

FED RD DIV NO	STATE PROJECT NO	SHEET NO
6	C86-14-23	44

STATE	STATE DIST NO	COUNTY
TEXAS	22	WEBB

CONT	SECT	JOB	HIGHWAY NO
0086	14	023	LOOP 20

D03QSX07.DGN-05 06-07-99 BAR_HO_ES05 \HCIVIL\CF0039\PHASE2

CSJ 0086-14-023

SUMMARY OF LOOP 20 ROADWAY QUANTITIES

ITEM NO. - DESCRIPTION			3028-502	3028-503	3116-501	3116-504	5019-502	5280-503	5469-501	5585-501
LOCATION			CONC (WIDE FLANG ANCH)	REINF STL (WIDE FLANG ANCH)	HOT MIX (TY A)	HOT MIX (TY D) (2 IN)	LNDSCP PAVERS	ANTI-GRAFFITI COATING - TYPE II *	SINGLE GDRAIL TERM (TY I)	REACT 350 HS-B (70 MPH) (30' 3")
SHEET NO.	BEGINNING STATION	ENDING STATION	CY	LB	TON		SF	SF	EA	EA
LOOP 20 - EB FRONTAGE ROAD										
1	426+50.83	431+00.00	0.00	0.00	0.00	0.00	0.00	0.00	0	0
2	431+00.00	443+00.00	0.00	0.00	586.18	0.00	0.00	3462.88	0	0
3	443+00.00	453+00.00	0.00	0.00	868.76	0.00	0.00	10915.00	0	0
4	453+00.00	463+00.00	12.32	1568.00	1473.27	154.61	0.00	5514.40	0	0
5	463+00.00	473+00.00	0.00	0.00	3024.76	471.53	0.00	0.00	1	0
6	473+00.00	483+00.00	0.00	0.00	3609.67	563.67	0.00	0.00	1	0
7	483+00.00	493+00.00	0.00	0.00	3018.89	470.56	0.00	0.00	0	0
8	493+00.00	500+70.00	41.45	5279.01	567.35	18.82	0.00	0.00	0	0
LOOP 20 - WB FRONTAGE ROAD										
1	429+13.30	431+00.00	32.04	4074.26	311.93	0.00	0.00	0.00	0	0
2	431+00.00	441+00.00	0.00	0.00	682.07	0.00	0.00	0.00	0	0
3	441+00.00	451+00.00	0.00	0.00	1072.13	0.00	0.00	11356.90	0	0
4	451+00.00	461+00.00	17.60	2240.00	997.90	50.11	0.00	0.00	0	0
5	461+00.00	471+00.00	0.00	0.00	334.89	536.56	0.00	0.00	0	0
6	471+00.00	481+00.00	0.00	0.00	0.00	488.16	0.00	0.00	0	0
7	481+00.00	491+00.00	0.00	0.00	0.00	537.78	0.00	0.00	0	0
8	491+00.00	500+00.00	22.88	2912.00	551.23	78.38	0.00	0.00	0	0
9	500+00.00	510+00.00	22.88	2912.00	1193.93	552.54	0.00	0.00	0	0
10	510+00.00	513+60.00	0.00	0.00	0.00	193.60	0.00	0.00	0	0
LOOP 20 - MAINLANES										
1	406+00.31	412+00.00	0.00	0.00	728.51	0.00	0.00	0.00	0	1
2	412+00.00	421+90.00	0.00	0.00	2266.70	0.00	0.00	0.00	0	0
GRAND CENTRAL ROAD										
1	10+00.00	14+98.44	27.72	3528.00	2087.58	264.45	1308.72	0.00	0	0
LOOP 20/McPHERSON INTERSECTION										
1			0.00	0.00	2613.50	0.00	20648.48	0.00	0	0
McPHERSON ROAD										
1	1+79.29	9+75.00	28.59	3642.10	339.40	421.65	0.00	0.00	0	0
2	9+75.00	18+20.36	26.94	3429.16	353.50	423.70	0.00	0.00	0	0
RAMP A										
1			0.00	0.00	430.79	0.00	0.00	0.00	2	0
RAMP B										
1			0.00	0.00	348.79	0.00	0.00	0.00	0	0
RAMP H										
1	100+70.14	107+00.00	0.00	0.00	1693.62	261.74	0.00	0.00	0	0
2	107+00.00	113.93.15	0.00	0.00	1007.94	151.68	0.00	0.00	0	0
DIRECT CONNECTOR 1										
1	317+26.90	323+00.00	0.00	0.00	389.40	0.00	0.00	12326.13	2	0
2	323+00.00	333+00.00	15.84	2016.00	60.23	0.00	0.00	5824.96	0	0
DIRECT CONNECTOR 2										
6	366+00.00	376+00.00	15.84	2016.00	394.14	0.00	0.00	17337.31	0	0
7	376+00.00	380+31.81	0.00	0.00	279.10	0.00	0.00	8795.90	0	0
TOTALS			264.10	33616.53	31286.16	5639.54	21957.20	75533.48	6	1

* ANTI-GRAFFITI COATING (TYPE II) SHALL BE APPLIED TO ALL "LOOP 20" RETAINING WALLS, AND TO THE SINGLE SLOPE TRAFFIC RAIL (SSTR) ABOVE THOSE WALLS, ON BOTH SIDES OF THE RAIL.

REV. 6-25-99

STATE OF TEXAS
CHARLES M. SHINE
62999
REGISTERED PROFESSIONAL ENGINEER

The seal appearing on this document was authorized by Charles Shine P.E. 62999, on June 3, 1999.

DATE	BY	REV	REVISION
6/3/99	DV	01	QUANTITIES

© 1999 Texas Department of Transportation

Brown & Root
HOUSTON, TEXAS

LOOP 20

SUMMARY OF ROADWAY QUANTITIES

SHEET 4 OF 4

FED RD DIV NO	STATE PROJECT NO	SHEET NO
6	C86-14-23	45

STATE	STATE DIST NO	COUNTY
TEXAS	22	WEBB

CONT	SECT	JOB	HIGHWAY NO
0086	14	023	LOOP 20

D030SX08.DGN-09 06-02-99 BAR_HO_ES05 \HCIVIL\CF0039\PHASE2

CSJ 0018-06-131

SUMMARY OF IH 35 ROADWAY QUANTITIES

ITEM NO. - DESCRIPTION			100-502	110-501	132-509	164-507	164-508	164-554	166-509	168-501	204-503	260-510	260-514	276-628	314-502
LOCATION			PREP ROW	EXCAVATION (RDWY)	EMBANK (DENS CONT) (TY C) (CL 3)	STND SEED FOR COOL SEASON TMP ERSN CNT	STND SEED FOR WARM SEASON TMP ERSN CNT	CELL FIB SEED (PERM) (RURAL)(CLAY)	FERT (13-13-13)	VEG WATER	SPRINKILING (DUST CONTROL)	LIME TRT SUBGR (DC) (8 IN)	LIME (TY A SLURRY) OR (TY B)	CEM TRT BS (STR-O)(TY D1 OR D2)(GR 6)(CL 6) VAR DEPTH	EMULS ASPH (BS OR SUBGR TRT) (MS-2)
SHEET NO.	BEGINNING STATION	ENDING STATION	STA	CY	CY	AC	AC	AC	TON	MG	MG	SY	TON	CY	GAL
IH 35 - NB FRONTAGE ROAD															
1	121+50.00	126+00.00	0	0	0	2.40	2.40	2.67	0.65	289.60	10	2527.83	22.75	0.00	502
2	126+00.00	136+00.00	0	0	0	2.19	2.19	2.44	0.59	264.47	11	2280.76	20.53	0.00	453
3	136+00.00	146+00.00	0	0	0	3.49	3.49	3.88	0.94	421.63	4	4012.51	36.12	0.00	798
4	146+00.00	156+00.00	0	0	0	1.13	1.13	1.26	0.30	136.60	4	3615.49	33.52	87.58	678
5	156+00.00	165+00.00	0	0	0	0.83	0.83	0.92	0.22	100.17	2	3200.00	28.80	0.00	636
6	165+00.00	168+70.00	0	0	0	0.36	0.36	0.40	0.10	43.58	4	1323.89	11.92	0.00	264
IH 35 - SB FRONTAGE ROAD															
1	122+80.00	126+00.00	0	0	0	1.29	1.29	1.43	0.35	155.69	6	1601.69	14.42	0.00	318
2	126+00.00	136+00.00	0	0	0	2.26	2.26	2.51	0.61	272.78	10	2145.88	19.31	0.00	427
3	136+00.00	146+00.00	0	0	0	3.13	3.13	3.48	0.84	377.81	4	3708.33	33.38	0.00	737
4	146+00.00	156+00.00	0	0	0	1.81	1.81	2.01	0.49	218.72	6	4131.39	38.17	87.58	780
5	156+00.00	166+00.00	0	0	0	0.78	0.78	0.86	0.21	93.67	4	3556.87	32.01	0.00	707
6	166+00.00	176+00.00	10	0	0	0.95	0.95	1.05	0.25	114.32	4	4622.22	41.60	0.00	919
7	176+00.00	186+00.00	10	4381	457	1.06	1.06	1.18	0.29	128.07	2	4722.22	42.50	0.00	939
8	186+00.00	196+00.00	10	2649	1060	1.06	1.06	1.18	0.29	128.47	2	4722.22	42.50	0.00	939
9	196+00.00	206+00.00	10	4246	415	1.77	1.77	1.97	0.48	213.81	2	4722.22	42.50	0.00	939
10	206+00.00	216+00.00	10	2956	557	1.03	1.03	1.14	0.28	123.88	6	4978.35	44.81	0.00	990
11	216+00.00	225+00.00	9	3065	2345	1.50	1.50	1.67	0.40	180.98	2	4250.00	38.25	0.00	845
12	225+00.00	234+00.00	9	2059	842	1.05	1.05	1.17	0.28	126.52	2	4250.00	38.25	0.00	845
13	234+00.00	243+00.00	9	6309	152	1.00	1.00	1.11	0.27	120.08	9	5199.80	46.80	0.00	1034
14	243+00.00	247+00.00	4	557	957	0.90	0.90	1.00	0.24	108.08	4	1500.00	13.50	0.00	298
IH 35 - MAINLANES															
1	106+60.00	116+00.00	9.4	7637	1113	9.78	9.78	10.87	2.63	1180.59	14	12100.24	112.28	300.73	2276
2	116+00.00	126+00.00	10	72557	2721	6.57	6.57	7.30	1.77	792.31	24	12377.11	111.40	0.00	2462
3	126+00.00	136+00.00	10	297494	0	0.19	0.19	0.21	0.05	22.92	24	6627.83	67.64	713.18	990
4	136+00.00	146+00.00	10	118772	1801	0.22	0.22	0.25	0.06	26.92	17	13198.61	118.80	0.00	2624
5	146+00.00	156+00.00	10	12434	13134	0.73	0.73	0.81	0.20	88.09	11	12788.61	115.11	0.00	2543
6	156+00.00	166+00.00	10	9711	6368	0.01	0.01	0.01	0.00	0.72	21	14432.44	129.90	0.00	2870
7	166+00.00	175+58.00	0	9813	1364	0.47	0.47	0.52	0.13	56.25	16	11540.54	107.57	330.35	2143
IH 35/LOOP 20 INTERSECTION															
1			0	0	0	2.33	2.33	2.59	0.63	281.14	0	8033.69	72.31	0.00	1598
2			0	0	0	2.33	2.33	2.59	0.63	281.14	0	8033.69	72.31	0.00	1598
RAMP C															
1			0	0	0	0.00	0.00	0.00	0.00	0.00	2	1264.82	11.38	0.00	251
RAMP D															
1			0	0	0	0.00	0.00	0.00	0.00	0.00	2	1710.19	15.39	0.00	340
RAMP E															
1			0	0	0	0.00	0.00	0.00	0.00	0.00	2	1402.12	12.62	0.00	279
RAMP F															
1			0	0	0	0.00	0.00	0.00	0.00	0.00	2	2073.43	18.66	0.00	412
RAMP K															
1			0	0	0	0.00	0.00	0.00	0.00	0.00	0	517.43	4.66	0.00	103
RAMP M															
1			0	0	0	0.00	0.00	0.00	0.00	0.00	0	1474.14	13.27	0.00	293
RAMP P															
1			0	0	0	0.00	0.00	0.00	0.00	0.00	1	1099.60	9.90	0.00	219
DIRECT CONNECTOR 1															
3	333+00.00	343+00.00	0	0	0	0.00	0.00	0.00	0.00	0.00	0	0.00	0.00	0.00	0
4	343+00.00	353+00.00	0	0	0	0.00	0.00	0.00	0.00	0.00	0	0.00	0.00	0.00	0
5	353+00.00	363+00.00	0	0	0	0.00	0.00	0.00	0.00	0.00	0	0.00	0.00	0.00	0
6	363+00.00	373+00.00	0	0	0	0.42	0.42	0.46	0.11	50.36	4	2364.81	22.55	112.61	418
7	373+00.00	374+86.32	0	0	0	0.09	0.09	0.10	0.02	10.57	3	562.47	5.06	0.00	112
DIRECT CONNECTOR 2															
1	324+46.16	326+00.00	0	0	0	0.03	0.03	0.03	0.01	3.37	1	410.24	3.69	0.00	82
2	326+00.00	336+00.00	0	0	0	0.33	0.33	0.37	0.09	39.65	4	2881.77	27.20	112.61	521
3	336+00.00	346+00.00	0	0	0	0.00	0.00	0.00	0.00	0.00	0	0.00	0.00	0.00	0
4	346+00.00	356+00.00	0	0	0	0.00	0.00	0.00	0.00	0.00	0	0.00	0.00	0.00	0
5	356+00.00	366+00.00	0	0	0	0.00	0.00	0.00	0.00	0.00	0	0.00	0.00	0.00	0
TOTALS			140.40	554589	33280	53.49	53.49	59.44	14.40	6452.96	246	185965.45	1693.34	1744.64	36172

REV. 6-25-99
SEE REVISION

STATE OF TEXAS
CHARLES M. SHINE
62999
REGISTERED PROFESSIONAL ENGINEER

The seal appearing on this document was authorized by Charles Shine P.E. 62999, on June 3, 1999.

DATE	BY	REV	REVISION
6/3/99	DV	01	QUANTITIES

© 1999 Texas Department of Transportation

Brown & Root
HOUSTON, TEXAS

IH 35

SUMMARY OF ROADWAY QUANTITIES

SHEET 1 OF 4

FED RD DIV NO	STATE PROJECT NO	SHEET NO
6	NH-99(462)	46

STATE	STATE DIST NO	COUNTY
TEXAS	22	WEBB

CONT	SECT	JOB	HIGHWAY NO
0018	06	131	IH 35

D03OSX01.DGN-09 06-07-99 BAR_HO_ES05 \HCIVIL\CF0039\PHASE2

CSJ 0018-06-131

SUMMARY OF IH 35 ROADWAY QUANTITIES

ITEM NO. - DESCRIPTION			100-502	110-501	132-509	164-507	164-508	164-554	166-509	168-501	204-503	260-510	260-514	276-628	314-502
LOCATION			PREP ROW	EXCAVATION (RDWY)	EMBANK (DENS CONT) (TY C) (CL 3)	STND SEED FOR COOL SEASON TMP ERSN CNT	STND SEED FOR WARM SEASON TMP ERSN CNT	CELL FIB SEED (PERM) (RURAL)(CLAY)	FERT (13-13-13)	VEG WATER	SPRINKILING (DUST CONTROL)	LIME TRT SUBGR (DC) (8 IN)	LIME (TY A SLURRY) OR (TY B)	CEM TRT BS (STR-0)(TY D1 OR D2)(GR 6)(CL 6) VAR DEPTH	EMULS ASPH (BS OR SUBGR TRT) (MS-2)
SHEET NO.	BEGINNING STATION	ENDING STATION	STA	CY	CY	AC	AC	AC	TON	MG	MG	SY	TON	CY	GAL
IH 35 - NB FRONTAGE ROAD															
1	121+50.00	126+00.00	0	0 *	0 *	2.40	2.40	2.67	0.65	289.60	10	2527.83	22.75	0.00	502
2	126+00.00	136+00.00	0	0 *	0 *	2.19	2.19	2.44	0.59	264.47	11	2280.76	20.53	0.00	453
3	136+00.00	146+00.00	0	0 *	0 *	3.49	3.49	3.88	0.94	421.63	4	4012.51	36.12	0.00	798
4	146+00.00	156+00.00	0	0 *	0 *	1.13	1.13	1.26	0.30	136.60	4	3615.49	33.52	87.58	678
5	156+00.00	165+00.00	0	0 *	0 *	0.83	0.83	0.92	0.22	100.17	2	3200.00	28.80	0.00	636
6	165+00.00	168+70.00	0	0 *	0 *	0.36	0.36	0.40	0.10	43.58	4	1323.89	11.92	0.00	264
IH 35 - SB FRONTAGE ROAD															
1	122+80.00	126+00.00	0	0 *	0 *	1.29	1.29	1.43	0.35	155.69	6	1601.69	14.42	0.00	318
2	126+00.00	136+00.00	0	0 *	0 *	2.26	2.26	2.51	0.61	272.78	10	2145.88	19.31	0.00	427
3	136+00.00	146+00.00	0	0 *	0 *	3.13	3.13	3.48	0.84	377.81	4	3708.33	33.38	0.00	737
4	146+00.00	156+00.00	0	0 *	0 *	1.81	1.81	2.01	0.49	218.72	6	4131.39	38.17	87.58	780
5	156+00.00	166+00.00	0	0 *	0 *	0.78	0.78	0.86	0.21	93.67	4	3556.87	32.01	0.00	707
6	166+00.00	176+00.00	10	0 *	0 *	0.95	0.95	1.05	0.25	114.32	4	4622.22	41.60	0.00	919
7	176+00.00	186+00.00	10	4381	457	1.06	1.06	1.18	0.29	128.07	2	4722.22	42.50	0.00	939
8	186+00.00	196+00.00	10	2649	1060	1.06	1.06	1.18	0.29	128.47	2	4722.22	42.50	0.00	939
9	196+00.00	206+00.00	10	4246	415	1.77	1.77	1.97	0.48	213.81	2	4722.22	42.50	0.00	939
10	206+00.00	216+00.00	10	2956	557	1.03	1.03	1.14	0.28	123.88	6	4978.35	44.81	0.00	990
11	216+00.00	225+00.00	9	3065	2345	1.50	1.50	1.67	0.40	180.98	2	4250.00	38.25	0.00	845
12	225+00.00	234+00.00	9	2059	842	1.05	1.05	1.17	0.28	126.52	2	4250.00	38.25	0.00	845
13	234+00.00	243+00.00	9	6309	152	1.00	1.00	1.11	0.27	120.08	9	5199.80	46.80	0.00	1034
14	243+00.00	247+00.00	4	557	957	0.90	0.90	1.00	0.24	108.08	4	1500.00	13.50	0.00	298
IH 35 - MAINLANES															
1	106+60.00	116+00.00	9.4	7637	1113	9.78	9.78	10.87	2.63	1180.59	14	12100.24	112.28	300.73	2276
2	116+00.00	126+00.00	10	72557	2721	6.57	6.57	7.30	1.77	792.31	24	12377.11	111.40	0.00	2462
3	126+00.00	136+00.00	10	297494	0	0.19	0.19	0.21	0.05	22.92	24	6627.83	67.64	713.18	990
4	136+00.00	146+00.00	10	118772	1801	0.22	0.22	0.25	0.06	26.92	17	13198.61	118.80	0.00	2624
5	146+00.00	156+00.00	10	12434	13134	0.73	0.73	0.81	0.20	88.09	11	12788.61	115.11	0.00	2543
6	156+00.00	166+00.00	10	9711	6368	0.01	0.01	0.01	0.00	0.72	21	14432.44	129.90	0.00	2870
7	166+00.00	175+58.00	0	9813	1364	0.47	0.47	0.52	0.13	56.25	16	11540.54	107.57	330.35	2143
IH 35/LOOP 20 INTERSECTION															
1			0	0	0	2.33	2.33	2.59	0.63	281.14	0	8033.69	72.31	0.00	1598
2			0	0	0	2.33	2.33	2.59	0.63	281.14	0	8033.69	72.31	0.00	1598
RAMP C															
1			0	0 *	0 *	0.00	0.00	0.00	0.00	0.00	2	1264.82	11.38	0.00	251
RAMP D															
1			0	0 *	0 *	0.00	0.00	0.00	0.00	0.00	2	1710.19	15.39	0.00	340
RAMP E															
1			0	0 *	0 *	0.00	0.00	0.00	0.00	0.00	2	1402.12	12.62	0.00	279
RAMP F															
1			0	0 *	0 *	0.00	0.00	0.00	0.00	0.00	2	2073.43	18.66	0.00	412
RAMP K															
1			0	0 *	0 *	0.00	0.00	0.00	0.00	0.00	0	517.43	4.66	0.00	103
RAMP M															
1			0	0 *	0 *	0.00	0.00	0.00	0.00	0.00	0	1474.14	13.27	0.00	293
RAMP P															
1			0	0 *	0 *	0.00	0.00	0.00	0.00	0.00	1	1099.60	9.90	0.00	219
DIRECT CONNECTOR 1															
3	333+00.00	343+00.00	0	0 *	0 *	0.00	0.00	0.00	0.00	0.00	0	0.00	0.00	0.00	0
4	343+00.00	353+00.00	0	0 *	0 *	0.00	0.00	0.00	0.00	0.00	0	0.00	0.00	0.00	0
5	353+00.00	363+00.00	0	0 *	0 *	0.00	0.00	0.00	0.00	0.00	0	0.00	0.00	0.00	0
6	363+00.00	373+00.00	0	0 *	0 *	0.42	0.42	0.46	0.11	50.36	4	2364.81	22.55	112.61	418
7	373+00.00	374+86.32	0	0 *	0 *	0.09	0.09	0.10	0.02	10.57	3	562.47	5.06	0.00	112
DIRECT CONNECTOR 2															
1	324+46.16	326+00.00	0	0 *	0 *	0.03	0.03	0.03	0.01	3.37	1	410.24	3.69	0.00	82
2	326+00.00	336+00.00	0	0 *	0 *	0.33	0.33	0.37	0.09	39.65	4	2881.77	27.20	112.61	521
3	336+00.00	346+00.00	0	0 *	0 *	0.00	0.00	0.00	0.00	0.00	0	0.00	0.00	0.00	0
4	346+00.00	356+00.00	0	0 *	0 *	0.00	0.00	0.00	0.00	0.00	0	0.00	0.00	0.00	0
5	356+00.00	366+00.00	0	0 *	0 *	0.00	0.00	0.00	0.00	0.00	0	0.00	0.00	0.00	0
TOTALS			140.40	554589	33280	53.49	53.49	59.44	14.40	6452.96	246	185965.45	1693.34	1744.64	36172

* QUANTITY ACCOUNTED FOR IN IH35 MAINLANES

STATE OF TEXAS
CHARLES M. SHINE
62999
REGISTERED PROFESSIONAL ENGINEER

The seal appearing on this document was authorized by Charles Shine P.E. 62999, on September 30, 1998.

DATE	BY	REV	REVISION
6/3/99	DV	01	QUANTITIES

© 1999 Texas Department of Transportation

Brown & Root
HOUSTON, TEXAS

IH 35

SUMMARY OF ROADWAY QUANTITIES

SHEET 1 OF 4

FED RD DIV NO	STATE PROJECT NO	SHEET NO
6	NH-99(462)	46

STATE	STATE DIST NO	COUNTY
TEXAS	22	WEBB

CONT	SECT	JOB	HIGHWAY NO
0018	06	131	IH 35

SEE REVISION

REF FILE(S): J01LOX01.BDR LV ON - 15,45,52,57,58,60-62

06-07-99 BAR_HO_ES05 \HCIVIL\CF0039\PHASE2 D03OSX01.DGN-1D

CSJ 0018-06-131

SUMMARY OF IH 35 ROADWAY QUANTITIES

ITEM NO. - DESCRIPTION			100-502	110-501	132-509	164-507	164-508	164-554	166-509	168-501	204-503	260-510	260-514	276-628	314-502
LOCATION			PREP ROW	EXCAVATION (RDWY)	EMBANK (DENS CONT) (TY C) (CL 3)	STND SEED FOR COOL SEASON TMP ERSN CNT	STND SEED FOR WARM SEASON TMP ERSN CNT	CELL FIB SEED (PERM) (RURAL)(CLAY)	FERT (13-13-13)	VEG WATER	SPRINKILING (DUST CONTROL)	LIME TRT SUBGR (DC) (8 IN)	LIME (TY A SLURRY) OR (TY B)	CEM TRT BS (STR-0)(TY D1 OR D2)(GR 6)(CL 6) VAR DEPTH	EMULS ASPH (BS OR SUBGR TRT) (MS-2)
SHEET NO.	BEGINNING STATION	ENDING STATION	STA	CY	CY	AC	AC	AC	TON	MG	MG	SY	TON	CY	GAL
IH 35 - NB FRONTAGE ROAD															
1	121+50.00	126+00.00	0	0 *	0 *	2.40	2.40	2.67	0.65	289.60	10	2527.83	22.75	0.00	502
2	126+00.00	136+00.00	0	0 *	0 *	2.19	2.19	2.44	0.59	264.47	11	2280.76	20.53	0.00	453
3	136+00.00	146+00.00	0	0 *	0 *	3.49	3.49	3.88	0.94	421.63	4	4012.51	36.12	0.00	798
4	146+00.00	156+00.00	0	0 *	0 *	1.13	1.13	1.26	0.30	136.60	4	3615.49	33.52	87.58	678
5	156+00.00	165+00.00	0	0 *	0 *	0.83	0.83	0.92	0.22	100.17	2	3200.00	28.80	0.00	636
6	165+00.00	168+70.00	0	0 *	0 *	0.36	0.36	0.40	0.10	43.58	4	1323.89	11.92	0.00	264
IH 35 - SB FRONTAGE ROAD															
1	122+80.00	126+00.00	0	0 *	0 *	1.29	1.29	1.43	0.35	155.69	6	1601.69	14.42	0.00	318
2	126+00.00	136+00.00	0	0 *	0 *	2.26	2.26	2.51	0.61	272.78	10	2145.88	19.31	0.00	427
3	136+00.00	146+00.00	0	0 *	0 *	3.13	3.13	3.48	0.84	377.81	4	3708.33	33.38	0.00	737
4	146+00.00	156+00.00	0	0 *	0 *	1.81	1.81	2.01	0.49	218.72	6	4131.39	38.17	87.58	780
5	156+00.00	166+00.00	0	0 *	0 *	0.78	0.78	0.86	0.21	93.67	4	3556.87	32.01	0.00	707
6	166+00.00	176+00.00	10	0 *	0 *	0.95	0.95	1.05	0.25	114.32	4	4622.22	41.60	0.00	919
7	176+00.00	186+00.00	10	4381	457	1.06	1.06	1.18	0.29	128.07	2	4722.22	42.50	0.00	939
8	186+00.00	196+00.00	10	2649	1060	1.06	1.06	1.18	0.29	128.47	2	4722.22	42.50	0.00	939
9	196+00.00	206+00.00	10	4246	415	1.77	1.77	1.97	0.48	213.81	2	4722.22	42.50	0.00	939
10	206+00.00	216+00.00	10	2956	557	1.03	1.03	1.14	0.28	123.88	6	4978.35	44.81	0.00	990
11	216+00.00	225+00.00	9	3065	2345	1.50	1.50	1.67	0.40	180.98	2	4250.00	38.25	0.00	845
12	225+00.00	234+00.00	9	2059	842	1.05	1.05	1.17	0.28	126.52	2	4250.00	38.25	0.00	845
13	234+00.00	243+00.00	9	6309	152	1.00	1.00	1.11	0.27	120.08	9	5199.80	46.80	0.00	1034
14	243+00.00	247+00.00	4	557	957	0.90	0.90	1.00	0.24	108.08	4	1500.00	13.50	0.00	298
IH 35 - MAINLANES															
1	106+60.00	116+00.00	9.4	7637	1113	9.78	9.78	10.87	2.63	1180.59	14	12100.24	112.28	300.73	2276
2	116+00.00	126+00.00	10	72557	2721	6.57	6.57	7.30	1.77	792.31	24	12377.11	111.40	0.00	2462
3	126+00.00	136+00.00	10	297494	0	0.19	0.19	0.21	0.05	22.92	24	6627.83	67.64	713.18	990
4	136+00.00	146+00.00	10	118772	1801	0.22	0.22	0.25	0.06	26.92	17	13198.61	118.80	0.00	2624
5	146+00.00	156+00.00	10	12434	13134	0.73	0.73	0.81	0.20	88.09	11	12788.61	115.11	0.00	2543
6	156+00.00	166+00.00	10	9711	6368	0.01	0.01	0.01	0.00	0.72	21	14432.44	129.90	0.00	2870
7	166+00.00	175+58.00	0	9813	1364	0.47	0.47	0.52	0.13	56.25	16	11540.54	107.57	330.35	2143
IH 35/LOOP 20 INTERSECTION															
1			0	0	0	2.33	2.33	2.59	0.63	281.14	0	8033.69	72.31	0.00	1598
2			0	0	0	2.33	2.33	2.59	0.63	281.14	0	8033.69	72.31	0.00	1598
RAMP C															
1			0	0 *	0 *	0.00	0.00	0.00	0.00	0.00	2	1264.82	11.38	0.00	251
RAMP D															
1			0	0 *	0 *	0.00	0.00	0.00	0.00	0.00	2	1710.19	15.39	0.00	340
RAMP E															
1			0	0 *	0 *	0.00	0.00	0.00	0.00	0.00	2	1402.12	12.62	0.00	279
RAMP F															
1			0	0 *	0 *	0.00	0.00	0.00	0.00	0.00	2	2073.43	18.66	0.00	412
RAMP K															
1			0	0 *	0 *	0.00	0.00	0.00	0.00	0.00	0	517.43	4.66	0.00	103
RAMP M															
1			0	0 *	0 *	0.00	0.00	0.00	0.00	0.00	0	1474.14	13.27	0.00	293
RAMP P															
1			0	0 *	0 *	0.00	0.00	0.00	0.00	0.00	1	1099.60	9.90	0.00	219
DIRECT CONNECTOR 1															
3	333+00.00	343+00.00	0	0 *	0 *	0.00	0.00	0.00	0.00	0.00	0	0.00	0.00	0.00	0
4	343+00.00	353+00.00	0	0 *	0 *	0.00	0.00	0.00	0.00	0.00	0	0.00	0.00	0.00	0
5	353+00.00	363+00.00	0	0 *	0 *	0.00	0.00	0.00	0.00	0.00	0	0.00	0.00	0.00	0
6	363+00.00	373+00.00	0	0 *	0 *	0.42	0.42	0.46	0.11	50.36	4	2364.81	22.55	112.61	418
7	373+00.00	374+86.32	0	0 *	0 *	0.09	0.09	0.10	0.02	10.57	3	562.47	5.06	0.00	112
DIRECT CONNECTOR 2															
1	324+46.16	326+00.00	0	0 *	0 *	0.03	0.03	0.03	0.01	3.37	1	410.24	3.69	0.00	82
2	326+00.00	336+00.00	0	0 *	0 *	0.33	0.33	0.37	0.09	39.65	4	2881.77	27.20	112.61	521
3	336+00.00	346+00.00	0	0 *	0 *	0.00	0.00	0.00	0.00	0.00	0	0.00	0.00	0.00	0
4	346+00.00	356+00.00	0	0 *	0 *	0.00	0.00	0.00	0.00	0.00	0	0.00	0.00	0.00	0
5	356+00.00	366+00.00	0	0 *	0 *	0.00	0.00	0.00	0.00	0.00	0	0.00	0.00	0.00	0
TOTALS			140.40	554589	33280	53.49	53.49	59.44	14.40	6452.96	246	185965.45	1693.34	1744.64	36172

* QUANTITY ACCOUNTED FOR IN IH35 MAINLANES

STATE OF TEXAS
CHARLES M. SHINE
62999
REGISTERED PROFESSIONAL ENGINEER

The seal appearing on this document was authorized by Charles Shine P.E. 62999, on September 30, 1999.

DATE	BY	REV	REVISION
6/3/99	DV	01	QUANTITIES
9/29/99	RS	01	QUANTITIES

© 1999 Texas Department of Transportation

Brown & Root
HOUSTON, TEXAS

IH 35

SUMMARY OF ROADWAY QUANTITIES

SHEET 1 OF 4

FED RD DIV NO	STATE PROJECT NO	SHEET NO
6	NH-99(462)	46

STATE	STATE DIST NO	COUNTY
TEXAS	22	WEBB

CONT	SECT	JOB	HIGHWAY NO
0018	06	131	IH 35

REF FILE(S): J01LOX01.BDR LV ON • 15,45,52,57,58,60-62

D030SX01.DGN-10 06-07-99 BAR_HO_ES05 \HCIVIL\CF0039\PHASE2

CSJ 0018-06-131

SUMMARY OF IH 35 ROADWAY QUANTITIES

ITEM NO. - DESCRIPTION			360-507	432-524	442-515	450-073(Y)	450-526	514-550
LOCATION			CONC PAV (CONT REINF HY STL) (12 IN)	RIPRAP CONC (CL B) (4 IN)	STR STL-HYC (WF TERM ANCH)	RAIL (TY SSTR) W/ DRAIN SLOTS	RAIL (TY SSTR)	PRM CNC TRF BAR SGL SLP (TY 2) W/ DRAIN SLOTS (H=42 IN)
SHEET NO.	BEGINNING STATION	ENDING STATION	SY	CY	LB	LF	LF	LF
IH 35 - NB FRONTAGE ROAD								
1	121+50.00	126+00.00	2327.83	0.51	0.00	0.00	0.00	0.00
2	126+00.00	136+00.00	2083.12	0.00	0.00	0.00	0.00	0.00
3	136+00.00	146+00.00	3568.06	4.22	0.00	0.00	0.00	0.00
4	146+00.00	156+00.00	186.67	9.94	2802.30	0.00	0.00	0.00
5	156+00.00	165+00.00	0.00	33.44	0.00	0.00	0.00	0.00
6	165+00.00	168+70.00	0.00	0.00	0.00	0.00	0.00	0.00
IH 35 - SB FRONTAGE ROAD								
1	122+80.00	126+00.00	1459.46	3.15	0.00	0.00	0.00	0.00
2	126+00.00	136+00.00	1961.55	0.00	0.00	0.00	0.00	0.00
3	136+00.00	146+00.00	3263.89	0.00	0.00	0.00	0.00	0.00
4	146+00.00	156+00.00	2880.34	2.90	2802.30	0.00	0.00	0.00
5	156+00.00	166+00.00	0.00	28.32	0.00	0.00	0.00	0.00
6	166+00.00	176+00.00	0.00	0.00	0.00	0.00	0.00	0.00
7	176+00.00	186+00.00	0.00	0.00	0.00	0.00	0.00	0.00
8	186+00.00	196+00.00	0.00	0.00	0.00	0.00	0.00	0.00
9	196+00.00	206+00.00	0.00	0.00	0.00	0.00	0.00	0.00
10	206+00.00	216+00.00	0.00	0.00	0.00	0.00	0.00	0.00
11	216+00.00	225+00.00	0.00	0.00	0.00	0.00	0.00	0.00
12	225+00.00	234+00.00	0.00	0.00	0.00	0.00	0.00	0.00
13	234+00.00	243+00.00	0.00	8.92	0.00	0.00	0.00	0.00
14	243+00.00	247+00.00	0.00	0.00	0.00	0.00	0.00	0.00
IH 35 - MAINLANES								
1	106+60.00	116+00.00	6901.11	0.00	9588.34	800.00	0.00	0.00
2	116+00.00	126+00.00	11488.22	2.63	0.00	1534.43	0.00	0.00
3	126+00.00	136+00.00	4617.22	7.41	22636.36	980.00	0.00	1380.00
4	136+00.00	146+00.00	12309.72	2.43	0.00	2000.00	0.00	0.00
5	146+00.00	156+00.00	11899.72	0.00	0.00	1045.00	0.00	0.00
6	156+00.00	166+00.00	13543.56	8.46	0.00	1700.00	0.00	0.00
7	166+00.00	175+58.00	7305.59	0.00	10529.11	37.14	0.00	0.00
IH 35/LOOP 20 INTERSECTION								
1			7181.53	0.00	0.00	0.00	0.00	0.00
2			7181.53	0.00	0.00	0.00	0.00	0.00
RAMP C								
1			1090.36	0.00	0.00	0.00	292.41	0.00
RAMP D								
1			1474.31	0.00	0.00	428.87	0.00	0.00
RAMP E								
1			1213.69	0.00	0.00	323.93	25.00	0.00
RAMP F								
1			1795.49	0.00	0.00	524.89	524.89	0.00
RAMP K								
1			0.00	0.00	0.00	0.00	0.00	0.00
RAMP M								
1			0.00	0.00	0.00	0.00	0.00	0.00
RAMP P								
1			0.00	0.00	0.00	0.00	0.00	0.00
DIRECT CONNECTOR 1								
3	333+00.00	343+00.00	0.00	0.00	0.00	0.00	0.00	299.00
4	343+00.00	353+00.00	0.00	0.00	0.00	0.00	0.00	0.00
5	353+00.00	363+00.00	0.00	0.00	0.00	0.00	0.00	254.00
6	363+00.00	373+00.00	2247.56	0.00	3590.38	425.00	939.00	0.00
7	373+00.00	374+86.32	546.33	0.00	0.00	186.32	186.32	0.00
DIRECT CONNECTOR 2								
1	324+46.16	326+00.00	444.43	0.00	0.00	153.84	0.00	0.00
2	326+00.00	336+00.00	2792.73	0.00	3590.38	400.00	1118.00	0.00
3	336+00.00	346+00.00	0.00	0.00	0.00	0.00	0.00	266.51
4	346+00.00	356+00.00	0.00	0.00	0.00	0.00	0.00	0.00
5	356+00.00	366+00.00	0.00	0.00	0.00	0.00	0.00	307.05
TOTALS			111764.01	112.33	55539.17	10539.42	3085.62	2506.56

REV. 6-25-99

STATE OF TEXAS
CHARLES M. SHINE
P.E. 62999
REGISTERED PROFESSIONAL ENGINEER

The seal appearing on this document was authorized by Charles Shine P.E. 62999, on June 3, 1999

DATE	BY	REV	REVISION
6/3/99	DV	01	QUANTITIES

© 1999 Texas Department of Transportation

Brown & Root
HOUSTON, TEXAS

IH 35

SUMMARY OF ROADWAY QUANTITIES

SHEET 2 OF 4

FED RD DIV NO	STATE PROJECT NO	SHEET NO
6	NH-99(462)	47

STATE	STATE DIST NO	COUNTY
TEXAS	22	WEBB

CONT	SECT	JOB	HIGHWAY NO
0018	06	131	IH 35

D03GSX02.DGN-05 06-02-99 BAR_HO_ES05 \HCIVIL\CF0039\PHASE2

CSJ 0018-06-131

SUMMARY OF IH 35 ROADWAY QUANTITIES

ITEM NO. - DESCRIPTION			514-517	529-510	529-529	531-507	531-542	540-501	540-505	556-508	556-510	3028-501
LOCATION			PERM CTB (SINGLE SLOPE) (TY 2) (H=42 IN)	CONC CURB (TY II) (MONO)	CONC CURB & GUTTER (TY II)(6 IN)	CONC SDWLK (4 IN)	CONC SDWLK (WHCHR RAMP) TYPE B	MTL BM GD FENCE (12 GA)	TERM ANCHOR SECT (12 GA)	PIPE UNDR (TY 8) (6 IN)	PIPE UNDR (TY 10) (6 IN)	EXCAV (WIDE FLANG ANCH)
SHEET NO.	BEGINNING STATION	ENDING STATION	LF	LF	LF	SY		LF	EA	LF	LF	CY
IH 35 - NB FRONTAGE ROAD												
1	121+50.00	126+00.00	0.00	1106.14	0.00	0.00	0	0	0	0.00	0.00	0.00
2	126+00.00	136+00.00	0.00	889.38	0.00	0.00	0	0	0	0.00	0.00	0.00
3	136+00.00	146+00.00	0.00	2204.59	0.00	0.00	0	0	0	0.00	0.00	0.00
4	146+00.00	156+00.00	0.00	200.00	1800.00	0.00	0	0	0	0.00	0.00	67.48
5	156+00.00	165+00.00	0.00	0.00	1800.00	0.00	0	340	1	0.00	0.00	0.00
6	165+00.00	168+70.00	0.00	0.00	440.00	0.00	0	0	0	0.00	0.00	0.00
IH 35 - SB FRONTAGE ROAD												
1	122+80.00	126+00.00	0.00	581.00	0.00	0.00	0	0	0	0.00	0.00	0.00
2	126+00.00	136+00.00	0.00	817.48	0.00	0.00	0	0	0	0.00	0.00	0.00
3	136+00.00	146+00.00	0.00	2000.00	0.00	0.00	0	0	0	0.00	0.00	0.00
4	146+00.00	156+00.00	0.00	1798.36	400.00	0.00	0	0	0	0.00	0.00	67.48
5	156+00.00	166+00.00	0.00	0.00	2000.00	0.00	0	175	1	0.00	0.00	0.00
6	166+00.00	176+00.00	0.00	0.00	1167.73	0.00	0	0	0	0.00	0.00	0.00
7	176+00.00	186+00.00	0.00	0.00	1000.00	0.00	0	0	0	0.00	0.00	0.00
8	186+00.00	196+00.00	0.00	0.00	1000.00	0.00	0	200	1	0.00	0.00	0.00
9	196+00.00	206+00.00	0.00	0.00	1000.00	0.00	0	0	0	0.00	0.00	0.00
10	206+00.00	216+00.00	0.00	0.00	878.84	0.00	0	0	0	0.00	0.00	0.00
11	216+00.00	225+00.00	0.00	0.00	900.00	0.00	0	0	0	0.00	0.00	0.00
12	225+00.00	234+00.00	0.00	0.00	900.00	0.00	0	0	0	0.00	0.00	0.00
13	234+00.00	243+00.00	0.00	0.00	1453.43	0.00	0	0	0	0.00	0.00	0.00
14	243+00.00	247+00.00	0.00	0.00	0.00	0.00	0	0	0	0.00	0.00	0.00
IH 35 - MAINLANES												
1	106+60.00	116+00.00	0.00	0.00	0.00	0.00	0	275	3	0.00	0.00	231.70
2	116+00.00	126+00.00	200.00	0.00	0.00	0.00	0	100	1	0.00	0.00	0.00
3	126+00.00	136+00.00	620.00	0.00	0.00	0.00	0	0	0	0.00	0.00	549.48
4	136+00.00	146+00.00	725.00	0.00	0.00	0.00	0	75	1	0.00	0.00	0.00
5	146+00.00	156+00.00	0.00	0.00	0.00	0.00	0	0	0	0.00	0.00	0.00
6	156+00.00	166+00.00	0.00	0.00	0.00	0.00	0	100	4	0.00	0.00	0.00
7	166+00.00	175+58.00	0.00	0.00	0.00	0.00	0	225	0	0.00	0.00	254.52
IH 35/LOOP 20 INTERSECTION												
1			0.00	3595.95	0.00	96.53	12	0	0	2242.90	104.5	0.00
2			0.00	2677.02	0.00	107.29	12	0	0	2312.06	112.1	0.00
RAMP C												
1			0.00	0.00	0.00	0.00	0	50	0	0.00	0.00	0.00
RAMP D												
1			0.00	0.00	0.00	0.00	0	50	1	0.00	0.00	0.00
RAMP E												
1			0.00	0.00	0.00	0.00	0	50	0	0.00	0.00	0.00
RAMP F												
1			0.00	0.00	0.00	0.00	0	50	0	0.00	0.00	0.00
RAMP K												
1			0.00	0.00	0.00	0.00	0	0	0	0.00	0.00	0.00
RAMP M												
1			0.00	0.00	534.00	0.00	0	0	0	0.00	0.00	0.00
RAMP P												
1			0.00	0.00	50.00	0.00	0	0	0	0.00	0.00	0.00
DIRECT CONNECTOR 1												
3	333+00.00	343+00.00	0.00	0.00	0.00	0.00	0	0	0	0.00	0.00	0.00
4	343+00.00	353+00.00	0.00	0.00	0.00	0.00	0	0	0	0.00	0.00	0.00
5	353+00.00	363+00.00	0.00	0.00	0.00	0.00	0	0	0	0.00	0.00	0.00
6	363+00.00	373+00.00	0.00	0.00	0.00	0.00	0	0	0	0.00	0.00	86.76
7	373+00.00	374+86.32	0.00	0.00	0.00	0.00	0	0	0	0.00	0.00	0.00
DIRECT CONNECTOR 2												
1	324+46.16	326+00.00	0.00	0.00	0.00	0.00	0	0	0	0.00	0.00	0.00
2	326+00.00	336+00.00	0.00	0.00	0.00	0.00	0	25	0	0.00	0.00	86.76
3	336+00.00	346+00.00	0.00	0.00	0.00	0.00	0	0	0	0.00	0.00	0.00
4	346+00.00	356+00.00	0.00	0.00	0.00	0.00	0	0	0	0.00	0.00	0.00
5	356+00.00	366+00.00	0.00	0.00	0.00	0.00	0	0	0	0.00	0.00	0.00
TOTALS			1545.00	15869.92	15324.00	203.82	24	1715	13	4554.96	216.60	1344.18

REV. 6-25-99

STATE OF TEXAS
CHARLES M. SHINE
62999
REGISTERED PROFESSIONAL ENGINEER

The seal appearing on this document was authorized by Charles Shine P.E. 62999, on June 3, 1999.

DATE	BY	REV	REVISION
6/3/99	DV	01	QUANTITIES

© 1999 Texas Department of Transportation

Brown & Root
HOUSTON, TEXAS

IH 35

SUMMARY OF ROADWAY QUANTITIES

SHEET 3 OF 4

FED RD DIV NO	STATE PROJECT NO	SHEET NO
6	NH-99(462)	48

STATE	STATE DIST NO	COUNTY
TEXAS	22	WEBB

CONT	SECT	JOB	HIGHWAY NO
0018	06	131	IH 35

D030SX03.DGN-06 06-02-99 BAR*HO*ES05 \HC!V!L\CF0039\PHASE2

CSJ 0018-06-131

SUMMARY OF IH 35 ROADWAY QUANTITIES

ITEM NO. - DESCRIPTION			3028-502	3028-503	3116-501	3116-504	5019-502	5280-503	5469-501	5585-	5585-501
LOCATION			CONC (WIDE FLANG ANCH)	REINF STL (WIDE FLANG ANCH)	HOT MIX (TY A)	HOT MIX (TY D)	LNDSCP PAVERS	ANTI-GRAFFITI COATING - TYPE II *	SINGLE GDRAIL TERM (TY I)	REACT 350.4-B (45 MPH) (15' 3")	REACT 350 HS-B (70 MPH) (30' 3")
SHEET NO.	BEGINNING STATION	ENDING STATION	CY	LB	TON	TON	SF	SF	EA	EA	EA
IH 35 - NB FRONTAGE ROAD											
1	121+50.00	126+00.00	0.00	0.00	556.12	0.00	0.00	0.00	0	0	0
2	126+00.00	136+00.00	0.00	0.00	501.77	0.00	0.00	0.00	0	0	0
3	136+00.00	146+00.00	0.00	0.00	882.75	0.00	0.00	0.00	0	0	0
4	146+00.00	156+00.00	12.32	1568.00	2070.43	308.00	0.00	0.00	0	0	0
5	156+00.00	165+00.00	0.00	0.00	2024.00	308.00	0.00	0.00	1	0	0
6	165+00.00	168+70.00	0.00	0.00	837.59	127.54	0.00	0.00	0	0	0
IH 35 - SB FRONTAGE ROAD											
1	122+80.00	126+00.00	0.00	0.00	352.37	0.00	0.00	0.00	0	0	0
2	126+00.00	136+00.00	0.00	0.00	472.09	0.00	0.00	0.00	0	0	0
3	136+00.00	146+00.00	0.00	0.00	815.83	0.00	0.00	0.00	0	0	0
4	146+00.00	156+00.00	12.32	1568.00	1157.76	68.44	0.00	0.00	0	0	0
5	156+00.00	166+00.00	0.00	0.00	2249.75	342.37	0.00	0.00	1	0	0
6	166+00.00	176+00.00	0.00	0.00	2972.32	459.56	0.00	0.00	0	0	0
7	176+00.00	186+00.00	0.00	0.00	3018.89	470.56	0.00	0.00	0	0	0
8	186+00.00	196+00.00	0.00	0.00	3018.89	470.56	0.00	0.00	1	0	0
9	196+00.00	206+00.00	0.00	0.00	3018.89	470.56	0.00	0.00	0	0	0
10	206+00.00	216+00.00	0.00	0.00	3182.13	495.83	0.00	0.00	0	0	0
11	216+00.00	225+00.00	0.00	0.00	2717.00	423.50	0.00	0.00	0	0	0
12	225+00.00	234+00.00	0.00	0.00	2717.00	423.50	0.00	0.00	0	0	0
13	234+00.00	243+00.00	0.00	0.00	3343.87	527.98	0.00	0.00	0	0	0
14	243+00.00	247+00.00	0.00	0.00	950.89	145.44	0.00	0.00	0	0	0
IH 35 - MAINLANES											
1	106+60.00	116+00.00	42.34	5391.80	4215.81	407.55	0.00	0.00	3	0	0
2	116+00.00	126+00.00	0.00	0.00	2722.96	0.00	0.00	0.00	2	0	0
3	126+00.00	136+00.00	100.32	12768.00	1095.97	0.00	0.00	46475.40	0	0	0
4	136+00.00	146+00.00	0.00	0.00	2903.69	0.00	0.00	19764.15	1	0	0
5	146+00.00	156+00.00	0.00	0.00	2813.49	0.00	0.00	0.00	0	0	0
6	156+00.00	166+00.00	0.00	0.00	3175.14	0.00	0.00	0.00	2	0	1
7	166+00.00	175+58.00	46.61	5932.97	3594.37	292.21	0.00	0.00	0	0	0
IH 35/LOOP 20 INTERSECTION											
1			0.00	0.00	1767.41	0.00	31852.43	0.00	0	0	0
2			0.00	0.00	1767.41	0.00	30408.91	0.00	0	0	0
RAMP C											
1			0.00	0.00	278.26	0.00	0.00	0.00	2	0	0
RAMP D											
1			0.00	0.00	376.24	0.00	0.00	0.00	0	0	0
RAMP E											
1			0.00	0.00	308.47	0.00	0.00	0.00	2	0	0
RAMP F											
1			0.00	0.00	456.16	0.00	0.00	0.00	2	0	0
RAMP K											
1			0.00	0.00	326.86	49.60	0.00	0.00	0	0	0
RAMP M											
1			0.00	0.00	922.11	136.74	0.00	0.00	0	0	0
RAMP P											
1			0.00	0.00	691.48	103.83	0.00	0.00	0	0	0
DIRECT CONNECTOR 1											
3	333+00.00	343+00.00	0.00	0.00	0.00	0.00	0.00	0.00	0	1	0
4	343+00.00	353+00.00	0.00	0.00	0.00	0.00	0.00	0.00	0	0	0
5	353+00.00	363+00.00	0.00	0.00	0.00	0.00	0.00	0.00	0	0	0
6	363+00.00	373+00.00	15.84	2016.00	463.08	0.00	0.00	10696.03	0	0	0
7	373+00.00	374+86.32	0.00	0.00	123.74	0.00	0.00	0.00	0	0	0
DIRECT CONNECTOR 2											
1	324+46.16	326+00.00	0.00	0.00	90.25	0.00	0.00	11921.51	0	0	0
2	326+00.00	336+00.00	15.84	2016.00	576.81	0.00	0.00	0.00	1	0	0
3	336+00.00	346+00.00	0.00	0.00	0.00	0.00	0.00	0.00	0	1	0
4	346+00.00	356+00.00	0.00	0.00	0.00	0.00	0.00	0.00	0	0	0
5	356+00.00	366+00.00	0.00	0.00	0.00	0.00	0.00	0.00	0	0	0
TOTALS			245.59	31260.77	65530.55	6031.77	62261.34	88857.09	18	2	1

SUMMARY OF DRIVEWAYS

STATION	LT/RT	WIDTH	LENGTH	MATERIAL	PAVEMENT AREAS
		LF	LF		SY
171+24.60	22 LT	25	15	ASPHALT	560.37
174+17.00	22 LT	25	15	ASPHALT	565.72
175+52.00	22 LT	20	15	ASPHALT	563.90

* ANTI-GRAFFITI COATING (TYPE II) SHALL BE APPLIED TO ALL "IH35" RETAINING WALLS, AND TO THE SINGLE SLOPE TRAFFIC RAIL ABOVE THOSE WALLS, ON BOTH SIDES OF THE RAIL. IT SHALL ALSO BE APPLIED, ON BOTH SIDES, TO ALL SINGLE SLOPE TRAFFIC RAIL BRIDGE RAIL AND SINGLE SLOPE CONCRETE BARRIER ON THE IH35 MAINLANES, BETWEEN STA 126+10 AND 141+96.

STATE OF TEXAS
CHARLES M. SHINE
62999
REGISTERED PROFESSIONAL ENGINEER

The seal appearing on this document was authorized by Charles Shine P.E. 62999, on June 3, 1999.

DATE	BY	REV	REVISION
6/3/99	DV	01	QUANTITIES

© 1999 Texas Department of Transportation

Brown & Root
HOUSTON, TEXAS

IH 35

SUMMARY OF ROADWAY QUANTITIES

SHEET 4 OF 4

FED RD DIV NO	STATE PROJECT NO	SHEET NO
6	NH-99(462)	49

STATE	STATE DIST NO	COUNTY
TEXAS	22	WEBB

CONT	SECT	JOB	HIGHWAY NO
0018	06	131	IH 35

SEE REVISION
REV. 6-25-99

D03GSX04.DGN-13 06-02-99 BAR_HO_ES05 \ACIVIL\CF0039\PHASE2

CSJ 0018-06-131

SUMMARY OF IH 35 ROADWAY QUANTITIES

ITEM NO. - DESCRIPTION			3028-502	3028-503	3116-501	3116-504	5019-502	5280-503	5469-501	5585-	5585-501
LOCATION			CONC (WIDE FLANG ANCH)	REINF STL (WIDE FLANG ANCH)	HOT MIX (TY A)	HOT MIX (TY D)	LNDSCP PAVERS	ANTI-GRAFFITI COATING - TYPE II *	SINGLE GDRAIL TERM (TY I)	REACT 350.4-B (45 MPH) (15' 3")	REACT 350 HS-B (70 MPH) (30' 3")
SHEET NO.	BEGINNING STATION	ENDING STATION	CY	LB	TON	TON	SF	SF	EA	EA	EA
IH 35 - NB FRONTAGE ROAD											
1	121+50.00	126+00.00	0.00	0.00	556.12	0.00	0.00	0.00	0	0	0
2	126+00.00	136+00.00	0.00	0.00	501.77	0.00	0.00	0.00	0	0	0
3	136+00.00	146+00.00	0.00	0.00	882.75	0.00	0.00	0.00	0	0	0
4	146+00.00	156+00.00	12.32	1568.00	2070.43	308.00	0.00	0.00	0	0	0
5	156+00.00	165+00.00	0.00	0.00	2024.00	308.00	0.00	0.00	1	0	0
6	165+00.00	168+70.00	0.00	0.00	837.59	127.54	0.00	0.00	0	0	0
IH 35 - SB FRONTAGE ROAD											
1	122+80.00	126+00.00	0.00	0.00	352.37	0.00	0.00	0.00	0	0	0
2	126+00.00	136+00.00	0.00	0.00	472.09	0.00	0.00	0.00	0	0	0
3	136+00.00	146+00.00	0.00	0.00	815.83	0.00	0.00	0.00	0	0	0
4	146+00.00	156+00.00	12.32	1568.00	1157.76	68.44	0.00	0.00	0	0	0
5	156+00.00	166+00.00	0.00	0.00	2249.75	342.37	0.00	0.00	1	0	0
6	166+00.00	176+00.00	0.00	0.00	2972.32	459.56	0.00	0.00	0	0	0
7	176+00.00	186+00.00	0.00	0.00	3018.89	470.56	0.00	0.00	0	0	0
8	186+00.00	196+00.00	0.00	0.00	3018.89	470.56	0.00	0.00	1	0	0
9	196+00.00	206+00.00	0.00	0.00	3018.89	470.56	0.00	0.00	0	0	0
10	206+00.00	216+00.00	0.00	0.00	3182.13	495.83	0.00	0.00	0	0	0
11	216+00.00	225+00.00	0.00	0.00	2717.00	423.50	0.00	0.00	0	0	0
12	225+00.00	234+00.00	0.00	0.00	2717.00	423.50	0.00	0.00	0	0	0
13	234+00.00	243+00.00	0.00	0.00	3343.87	527.98	0.00	0.00	0	0	0
14	243+00.00	247+00.00	0.00	0.00	950.89	145.44	0.00	0.00	0	0	0
IH 35 - MAINLANES											
1	106+60.00	116+00.00	42.34	5391.80	4215.81	407.55	0.00	0.00	3	0	0
2	116+00.00	126+00.00	0.00	0.00	2722.96	0.00	0.00	0.00	2	0	0
3	126+00.00	136+00.00	100.32	12768.00	1095.97	0.00	0.00	46475.40	0	0	0
4	136+00.00	146+00.00	0.00	0.00	2903.69	0.00	0.00	19764.15	1	0	0
5	146+00.00	156+00.00	0.00	0.00	2813.49	0.00	0.00	0.00	0	0	0
6	156+00.00	166+00.00	0.00	0.00	3175.14	0.00	0.00	0.00	2	0	1
7	166+00.00	175+58.00	46.61	5932.97	3594.37	292.21	0.00	0.00	0	0	0
IH 35/LOOP 20 INTERSECTION											
1			0.00	0.00	1767.41	0.00	31852.43	0.00	0	0	0
2			0.00	0.00	1767.41	0.00	30408.91	0.00	0	0	0
RAMP C											
1			0.00	0.00	278.26	0.00	0.00	0.00	2	0	0
RAMP D											
1			0.00	0.00	376.24	0.00	0.00	0.00	0	0	0
RAMP E											
1			0.00	0.00	308.47	0.00	0.00	0.00	2	0	0
RAMP F											
1			0.00	0.00	456.16	0.00	0.00	0.00	2	0	0
RAMP K											
1			0.00	0.00	326.86	49.60	0.00	0.00	0	0	0
RAMP M											
1			0.00	0.00	922.11	136.74	0.00	0.00	0	0	0
RAMP P											
1			0.00	0.00	691.48	103.83	0.00	0.00	0	0	0
DIRECT CONNECTOR 1											
3	333+00.00	343+00.00	0.00	0.00	0.00	0.00	0.00	0.00	0	1	0
4	343+00.00	353+00.00	0.00	0.00	0.00	0.00	0.00	0.00	0	0	0
5	353+00.00	363+00.00	0.00	0.00	0.00	0.00	0.00	0.00	0	0	0
6	363+00.00	373+00.00	15.84	2016.00	463.08	0.00	0.00	10696.03	0	0	0
7	373+00.00	374+86.32	0.00	0.00	123.74	0.00	0.00	0.00	0	0	0
DIRECT CONNECTOR 2											
1	324+46.16	326+00.00	0.00	0.00	90.25	0.00	0.00	11921.51	0	0	0
2	326+00.00	336+00.00	15.84	2016.00	576.81	0.00	0.00	0.00	1	0	0
3	336+00.00	346+00.00	0.00	0.00	0.00	0.00	0.00	0.00	0	1	0
4	346+00.00	356+00.00	0.00	0.00	0.00	0.00	0.00	0.00	0	0	0
5	356+00.00	366+00.00	0.00	0.00	0.00	0.00	0.00	0.00	0	0	0
TOTALS			245.59	31260.77	65530.55	6031.77	62261.34	88857.09	18	2	1

SUMMARY OF DRIVEWAYS

STATION	LT/RT	WIDTH	LENGTH	MATERIAL	PAVEMENT AREAS
		LF	LF		SY **
171+24.60	22 LT	25	15	ASPHALT	560.37
174+17.00	22 LT	25	15	ASPHALT	565.72
175+52.00	22 LT	20	15	ASPHALT	563.90

** DRIVEWAY PAVEMENT AREAS ARE FOR CONTRACTOR INFORMATION ONLY. THE MATERIALS FOR THE DRIVEWAYS, AS SHOWN ON THE MISCELLANEOUS ROADWAY DETAILS (SHEET 27), ARE INCLUDED WITH PAY ITEMS 3116-501 & 3116-504 ON SHEET 6 OF THE IH35 SOUTHBOUND FRONTAGE ROAD.

* ANTI-GRAFFITI COATING (TYPE II) SHALL BE APPLIED TO ALL "IH35" RETAINING WALLS, AND TO THE SINGLE SLOPE TRAFFIC RAIL ABOVE THOSE WALLS, ON BOTH SIDES OF THE RAIL. IT SHALL ALSO BE APPLIED, ON BOTH SIDES, TO ALL SINGLE SLOPE TRAFFIC RAIL BRIDGE RAIL AND SINGLE SLOPE CONCRETE BARRIER ON THE IH35 MAINLANES, BETWEEN STA 126+10 AND 141+96.

STATE OF TEXAS
RUDY L. GOMEZ
58664
REGISTERED PROFESSIONAL ENGINEER

The seal appearing on this document was authorized by Rudy L. Gomez P.E. 58664, on September 30, 1999.

DATE	BY	REV	REVISION
6/3/99	DV	01	QUANTITIES
10/19/99	DV	02	** NOTE ADDED

© 1999 Texas Department of Transportation

Brown & Root
HOUSTON, TEXAS

IH 35

SUMMARY OF ROADWAY QUANTITIES

SHEET 4 OF 4

FED RD DIV NO	STATE PROJECT NO	SHEET NO
6	NH-99(462)	49

STATE	STATE DIST NO	COUNTY
TEXAS	22	WEBB

CONT	SECT	JOB	HIGHWAY NO
0018	06	131	IH 35

D03GSX04.DGN-14 10-19-99 BAR_HO_ES05 \HCIVIL\CF0039\PHASE2

CSJ 0018-05-057

SUMMARY OF UNIROYAL ROAD ROADWAY QUANTITIES

ITEM NO. - DESCRIPTION			100-502	110-501	132-509	164-507	164-508	164-554	166-509	168-501	204-503	260-510	260-514	314-502
LOCATION			PREP ROW	EXCAVATION (RDWY)	EMBANK (DENS CONT) (TY C) (CL 3)	STND SEED FOR COOL SEASON TMP ERSN CNT	STND SEED FOR WARM SEASON TMP ERSN CNT	CELL FIB SEED (PERM) (RURAL)(CLAY)	FERT (13-13-13)	VEG WATER	SPRINKILING (DUST CONTROL)	LIME TRT SUBGR (DC) (8 IN)	LIME (TY A SLURRY) OR (TY B)	EMULS ASPH (BS OR SUBGR TRT) (MS-2)
SHEET NO.	BEGINNING STATION	ENDING STATION	AC	CY	CY	AC	AC	AC	TON	MG	MG	SY	TON	GAL
UNIROYAL ROAD														
1			14.83	2056	562	1.73	1.73	1.92	0.46	208.51	9	6393.42	57.55	1271
TOTALS			14.83	2056	562	1.73	1.73	1.92	0.46	208.51	9	6393.42	57.55	1271

CSJ 0018-05-057

SUMMARY OF UNIROYAL ROAD ROADWAY QUANTITIES

ITEM NO. - DESCRIPTION			529-	3113-505	3116	3116-504
LOCATION			CONC CURB (TY II) (MONO) (6 IN)	FAST TRACK CONC (12 IN)	HOT MIX (TY A) (8 IN)	HOT MIX (TY D) (2 IN)
SHEET NO.	BEGINNING STATION	ENDING STATION	LF	SY	TON	TON
UNIROYAL ROAD						
1			1547.53	4637.79	1964.39	129.68
TOTALS			1547.53	4637.79	1964.39	129.68

STATE OF TEXAS
CHARLES M. SHINE
62999
REGISTERED PROFESSIONAL ENGINEER

The seal appearing on this document was authorized by Charles Shine P.E. 62999, on June 3, 1999.

DATE	BY	REV	REVISION
6/3/99	DV	01	QUANTITIES

© 1999 Texas Department of Transportation

Brown & Root
HOUSTON, TEXAS

UNIROYAL ROAD

SUMMARY OF UNIROYAL QUANTITIES

SHEET 1 OF 1

FED RD DIV NO	STATE PROJECT NO		SHEET NO
6	C86-14-23		50
STATE	STATE DIST NO	COUNTY	
TEXAS	22	WEBB	
CONT	SECT	JOB	HIGHWAY NO
0018	05	057	LOOP 20

REV. 6-25-99

D03QSX09.DGN-05 06-02-99 BAR_HO_ES05 \HCIVIL\CF0039\PHASE2

LOOP 20 PAVEMENT REMOVAL QUANTITIES

ITEM NO. - DESCRIPTION			104-509	104-513	104-529	105-504
LOCATION			REMOV CONC (SIDEWALK)	REMOV CONC (CURB & GUTTER)	REMOV CONC (SHLDR DRAIN)	RMV STAB BS AND/OR ASPH PAV (CL 2)VAR DEP
SHEET NO.	BEGINNING STATION	ENDING STATION	SY	LF	SY	SY
LOOP 20						
1	388+00.00	428+00.00	0.00	0.00	0.00	3156.81
2	428+00.00	452+00.00	0.00	0.00	215.37	14364.89
3	452+00.00	494+00.00	0.00	0.00	0.00	12009.47
4	494+00.00	520+00.00	73.24	2314.00	0.00	10962.10
TOTALS (CSJ 0086-14-023)			73.24	2314.00	215.37	40493.26

IH 35 PAVEMENT REMOVAL QUANTITIES

ITEM NO. - DESCRIPTION			104-503	104-509	104-529	105-504	542-501
LOCATION			REMOV CONC (RIPRAP)	REMOV CONC (SIDEWALK)	REMOV CONC (SHLDR DRAIN)	RMV STAB BS AND/OR ASPH PAV (CL 2)VAR DEP	REMOV METAL GUARD FENCE
SHEET NO.	BEGINNING STATION	ENDING STATION	SY	SY	SY	SY	SY
IH 35							
5	105+00.00	125+00.00	0.00	0.00	485.88	23510.61	0.00
6	125+00.00	138+00.00	2481.98	178.70	1782.03	24651.59	698.54
7	138+00.00	178+00.00	0.00	0.00	471.50	80493.72	594.10
8	178+00.00	218+00.00	0.00	0.00	0.00	8755.65	188.11
9	218+00.00	248+78.16	0.00	0.00	0.00	6097.49	101.56
TOTALS (CSJ 0018-06-131)			2481.98	178.70	2739.41	143509.06	1582.32

UNIROYAL ROAD PAVEMENT REMOVAL QUANTITIES

ITEM NO. - DESCRIPTION			104-513	105-504
LOCATION			REMOV CONC (CURB & GUTTER)	RMV STAB BS AND/OR ASPH PAV (CL 2)VAR DEP
SHEET NO.	BEGINNING STATION	ENDING STATION	LF	SY
UNIROYAL ROAD				
9			563.60	5532.56
TOTALS (CSJ 0018-05-057)			563.60	5532.56

REV. 6-25-99

STATE OF TEXAS
CHARLES M. SHINE
62999
REGISTERED PROFESSIONAL ENGINEER

The seal appearing on this document was authorized by Charles Shine P.E. 62999, on June 3, 1999.

DATE	BY	REV	REVISION
06/03/99	DV	1	QUANTITIES

© 1999 Texas Department of Transportation

Brown & Root
HOUSTON, TEXAS

IH 35/LOOP 20

SUMMARY OF REMOVAL QUANTITIES

SHEET 1 OF 1

FED RD DIV NO	STATE PROJECT NO	SHEET NO
6	C86-14-23	51

STATE	STATE DIST NO	COUNTY
TEXAS	22	WEBB

CONT	SECT	JOB	HIGHWAY NO
0086	14	023	LOOP 20

D030SX13.DGN-04 06-03-99 BAR_HO_ES05 \HCIVIL\CF0039\PHASE2

ELECTRICAL SCHEDULE

ITEM	TOTAL QTY.	RUN NUMBER / RUN LENGTH	A 20′	B 55′	C 10′	D 85′	E 20′	F 20′	G 15′	H 85′	9 25′
POWER	* 190′	1/COND-#6	2								2
	* 125′	1/COND-#8 Bare	2								1
SIGNAL CABLE	---m	2/C-#12									
	* 780′	TY A 5 COND/ 12 AWG	4			4	2	2	2		
	** 400′	TY A 7 COND/ 12 AWG	2			2	2				
	* 385′	TY A 3 COND/18 AWG	2			1	1	1	1	1	
	* 385′	RG 59 COAX (VIVDS)	2			1	1	1	1	1	
LOOP LEAD	80′	LOOP WIRE			4						
	150′	2/C-(SHIELD)		2							
CONDUIT		1" PVC TRENCH									
	85′	2" PVC TRENCH	2	1	1						1 ***
		4" PVC Bore									
	20′	4" PVC Trench	1								

*INCLUDES QUANTITY ON SIGNAL POLE.

**TxDOT WILL FURNISH 7 CONDUCTOR CABLE.

***THIS IS A PROPOSED RUN FOR PERMANENT TRAFFIC SIGNAL

LOOP DETECTOR SCHEDULE

LOOP	SIZE	SAW CUT	WIRE LENGTH	AMP. NO.	SETTING	FUNCTION
L-7	6′X40′	122′	244′	7	PRESENCE	CALL AND EXTEND Ø7
L-9	6′X40′	122′	244′	9	PRESENCE	EXTEND Ø 7
TOTAL		244′	488′			

SIGNAL HEAD SCHEDULE

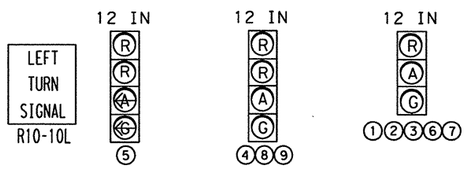

SIGNALS HEADS AND SIGN

NOTE:
BACK PLATE SHALL BE INSTALLED ON SIGNALS HEAD 2 3 5 7 9
LOUVERS SHALL BE INSTALLED ON SIGNAL HEAD 5

DETAIL

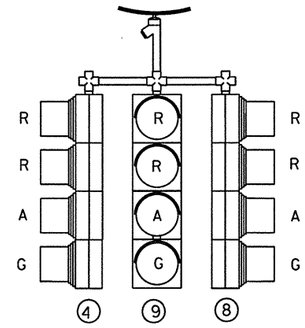

4 HEADS FOUR SEC. 12"
TRAFFIC SIGNAL
(AS SHOWN)
LOOKING EAST

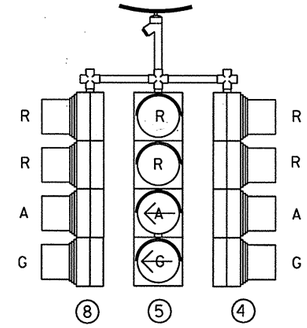

4 HEADS FOUR SEC. 12"
TRAFFIC SIGNAL
(AS SHOWN)
LOOKING WEST

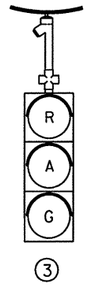

1 HEAD THREE SEC. 12"
TRAFFIC SIGNAL
(AS SHOWN)
LOOKING WEST

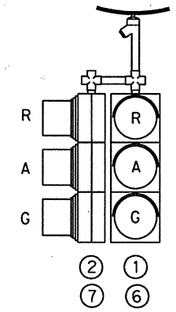

2 HEADS THREE SEC. 12"
TRAFFIC SIGNAL
(AS SHOWN)
LOOKING NORTH & SOUTH

TRAFFIC SIGNAL POLES

POLE NO.	SIGNAL POLE DESIGNATION	FOUNDATION TYPE	FOUNDATION DEPTH
POLE 1	30′ POLE WITH LUMINAIRE (EXISTING).	36-A	12′ (PROPOSED)
POLE 2	30′ POLE WITH LUMINAIRE (EXISTING).	36-A	12′ (PROPOSED)

© 2001

Texas Department of Transportation

QUANTITIES AND DETAILS
LOOP 20 AND MCPHERSON Rd.

SCALE 1:50 — 0 10 20 40 60 80

DN: JNR	FED. RD. DIV. NO.	STATE	STATE PROJECT NO.			HIGHWAY NO.
CK DN: BR	6	TEXAS	NH-99 (462)			LOOP 20
DW: JNR	STATE DIST. NO.	COUNTY	CONTROL NO.	SECTION NO.	JOB NO.	SHEET NO.
CK DW: GD	22	WEBB	0018	06	131, ETC	51A
TR:						
CK TR:						

TRAFFIC REF : 2001/SCHEMATIC/MILO 1&2/TEI/
FILE NAME: XQUANTITIES.DGN

LIST OF MATERIALS FOR TEMPORARY TRAFFIC SIGNALS

				Mc PHERSON & LOOP 20	
ITEM	CODE	DESCRIPTION	UNIT	ESTIMATE	FINAL
0618	0511	CONDUIT (PVC)(SCHD 40)(2")	LF	85	
0618	0514	CONDUIT (PVC)(SCHD 40)(4")	LF	20	
0620	0503	ELEC CONDUCTOR (NO. 8) BARE	LF	215	
0620	0510	ELEC CONDUCTOR (NO. 6) INSULATED	LF	190	
0624	0503	GROUND BOX TY C (162911) W/APRON	EA	2	
0625	0503	ZINC-COAT STL WIRE STRAND (3/16 IN)	LF	260	
0625	0504	ZINC-COAT STL WIRE STRAND (5/16 IN)	LF	780	
0636	0501	ALUM SIGNS (TY A)	SF	5	
0656	0542	FND FOR TRAF SIG (TY A) (36 IN DRIL SHFT)	LF	24	
0656	0518	TRAF SIG CNTRL FND	CY	2.5	
0680	0501	INSTAL OF HWY TRAF SIG (ISOLATED)	EA	1	
0682	0502	VEH SIG SEC (12")	EA	31	
0682	0509	BACK PLATE (3 SEC)(12 IN)	EA	4	
0682	0510	BACK PLATE (4 SEC)(12 IN)	EA	1	
0684	0505	TRAF SIG CBL (TY A)(5 CONDR/12 AWG)	LF	780	
** 0684	0507	TRAF SIG CBL (TY A)(7 CONDR/12 AWG)	LF	400	
0684	0544	TRAF SIG CBL (TY C)(2 CONDR/14 AWG)	LF	150	
0684	0558	TRAF SIG CBL (TY A) (3 CONR) (18 AWG)	EA	385	
0688	0502	VEH DETECT 1/C (14 AWG) BLK	LF	80	
0688	0511	VEH DETECT (SAW CUT)	LF	244	
6959	0505	VIVDS COMMUNICATION CABLE (COAXIAL)	EA	385	
** 6959	XXXX	VIVDS PROCESOR SYSTEM	EA	1	
** 6959	XXXX	VIVDS CAMERA ASSEMBLY	EA	2	
** 6959	XXXX	VIVDS SET-UP SYSTEM	EA	1	
**		THE CABINET CONTROLLER SHALL BE SUPPLIED BY TXDOT			

** FOR CONTRACTOR'S INFORMATION ONLY

© 2001

Texas Department of Transportation

SUMMARY SHEET
LOOP 20 AND MCPHERSON Rd.

SCALE 1:50 — 0 10 20 40 60 80

DN: JNR	FED. RD. DIV. NO.	STATE	STATE PROJECT NO.			HIGHWAY NO.	
CK DN: BR	6	TEXAS	NH-99 (462)			LOOP 20	
DW: JNR	STATE DIST. NO.	COUNTY	CONTROL NO.	SECTION NO.	JOB NO.	SHEET NO.	
CK DW: GD	22	WEBB	0018	06	131, ETC	5/13	
TR:							
CK TR:							

TRAFFIC REF : 2001/SCHEMATIC/MILO 1&2/TEI/
FILE NAME: XSUMMARY.DGN

SUMMARY OF STORM SEWER SYSTEM

LINE FROM	LINE TO	400-513 STRUC EXCAV (SEWER) CY	400-514 CEM STAB BKFL (SEWER) CY	402-501 TRENCH EXCAV PROTECTION LF	403-501 TEMPORARY SPL SHORING LF	462-605 CONC BOX SEWER (SPL)(7 FT X 4 FT) PC-5 LF	462-555 CONC BOX SEWER (7 FT X 4 FT) PC-5 LF	462-560 CONC BOX SEWER (8 FT X 5 FT) PC-5 LF	462-565 CONC BOX SEWER (9 FT X 6FT) PC-5 LF	462-570 CONC BOX SEWER (10 FT X 6FT) PC-5 LF	464-559 RC PIPE (SEWER) (CL III)(18 IN) LF	464-561 RC PIPE (SEWER) (CL III)(24 IN) LF
LOOP 20 (CSJ 0086-14-023)												
G10	G19	3840.9	0.0	364					728			
G39	G113	144.2	46.9	104								104
G113	G23	216.3	86.1	112								
G38	G39	83.2	28.0	62								
G21	G113	332.9	85.4	130								
G22	G23	90.0	31.6	53								57
G23	G24	2283.0	456.9	518								
G24	G25	151.0	28.9	64								
G25	G26	1353.0	216.9	481								
G26	G87	107.1	61.7	70								
G87	G29	104.4	29.8	66								
G29	G103	461.1	206.4	234								
G98	G101	128.6	11.7	173								173
G101	G87	8.8	1.3									14
G30	G29	48.2	23.0	51								51
G31	G32	79.5	23.5	52								52
G32	G33	1319.3	260.4	470								470
G33	G34	85.1	29.9	54								
G34	G99	579.7	56.7	373								
G99	G88	80.0	35.5	54								
G88	G40	105.4	48.4	63								
G40	G102	483.2	186.9	243								
G89	G56	193.6	10.6	113								113
G56	G88	17.1	2.0									21
G35	G40	41.2	17.6	39								39
G49	G50	29.1	16.2									
G104	G105	62.5	24.4	54								54
G105	G32	1166.7	189.4	420								
G111	G21	73.9	25.7	57								
M1	M2	178.1	72.2	160								160
M2	M3	444.4	92.9	206								
M3	M4	326.7	57.2	87								
M4	M5	1060.0	203.7	231								
M5	OUTFALL	845.1	126.7	281								
M6	M2	42.3	21.6									48
M7	M8	614.4	236.8	525								525
M8	M3	113.6	46.9									104
M9	M10	355.5	189.9									421
M10	M11	226.0	96.1	213								213
M11	M12	390.7	131.2	291								291
M12	M4	77.4	28.3	51								
M13	M11	36.4	18.5									41
M14	M15	98.0	10.8									115
M15	M16	28.9	21.6									
M16	M12	64.6	21.6									48
SUBTOTAL (CSJ 0086-14-023)		18571.2	3617.7	6519.0	0.0	0.0	0.0	0.0	728.0	0.0	0.0	3114.0

SEE REVISION
REV. 6-25-99

STATE OF TEXAS
RUDY L. GOMEZ
58664
REGISTERED PROFESSIONAL ENGINEER

The seal appearing on this document was authorized by Rudy L. Gomez P.E. 58664, on June 3, 1999.

Rudy L. Gomez

DATE	BY	REV	REVISION
06/03/99	RG	1	TABLE

© 1999 Texas Department of Transportation

Brown & Root
HOUSTON, TEXAS

IH 35/LOOP 20

SUMMARY OF STORM SEWER SYSTEM

SHEET 1 OF 6

FED RD DIV NO	STATE PROJECT NO	SHEET NO
6	NH-99(462)	52

STATE	STATE DIST NO	COUNTY
TEXAS	22	WEBB

CONT	SECT	JOB	HIGHWAY NO
0018	06	131	IH 35

D130SX07.DGN-05 06-02-99 BAR_HO_ES05 \HCIVIL\CF0039\PHASE2

SUMMARY OF STORM SEWER SYSTEM

LINE FROM	LINE TO	400-513 STRUC EXCAV (SEWER) CY	400-514 CEM STAB BKFL (SEWER) CY	402-501 TRENCH EXCAV PROTECTION LF	403-501 TEMPORARY SPL SHORING LF	462-605 CONC BOX SEWER (SPL)(7 FT X 4 FT) PC-5 LF	462-555 CONC BOX SEWER (7 FT X 4 FT) PC-5 LF	462-560 CONC BOX SEWER (8 FT X 5 FT) PC-5 LF	462-565 CONC BOX SEWER (9 FT X 6FT) PC-5 LF	462-570 CONC BOX SEWER (10 FT X 6FT) PC-5 LF	464-559 RC PIPE (SEWER) (CL III)(18 IN) LF	464-561 RC PIPE (SEWER) (CL III)(24 IN) LF
LOOP 20 (CSJ 0086-14-023)												
G10	G19	3840.9	0.0	364					728			
G115	G116	72.7	16.8	75.5								75.5
G117	G116	4.5	1.3	5.5								5.5
G116	G119	127.5	22.2	100								100
G119	G39	161.8	27.0	123								123
G39	G113	144.2	46.9	104								104
G113	G23	216.3	86.1	112								
G38	G39	83.2	28.0	62								
G21	G113	332.9	85.4	130								
G22	G23	101.1	35.5	64								64
G23	G24	2283.0	456.9	518								
G120	G24	11.6	1.8	9								9
G24	G25	151.0	28.9	64								
G25	G26	1353.0	216.9	481								
G26	G87	107.1	61.7	70								
G87	G29	104.4	29.8	66								
G29	G103	461.1	206.4	234								
G98	G101	86.9	11.2	117								117
G101	G87	8.8	1.3									14
G30	G29	48.2	23.0	51								51
G31	G32	79.5	23.5	52								52
G32	G33	1319.3	260.4	470								470
G33	G34	85.1	29.9	54								
G34	G99	579.7	56.7	373								
G99	G88	80.0	35.5	54								
G88	G40	105.4	48.4	63								
G40	G102	483.2	186.9	243								
G89	G56	193.6	10.6	113								113
G56	G88	17.1	2.0									21
G35	G40	41.2	17.6	39								39
G49	G50	29.1	16.2									
G104	G105	62.5	24.4	54								54
G105	G32	1166.7	189.4	420								
G118	G21	115.1	16.4	74								74
G111	G21	73.9	25.7	57								
M1	M2	178.1	72.2	160								160
M2	M3	444.4	92.9	206								
M3	M4	326.7	57.2	87								
M4	M5	1060.0	203.7	231								
M5	OUTFALL	845.1	126.7	281								
M6	M2	42.3	21.6									48
M7	M8	614.4	236.8	525								525
M8	M3	113.6	46.9									104
M9	M10	355.5	189.9									421
M10	M11	226.0	96.1	213								213
M11	M12	390.7	131.2	291								291
M12	M4	77.4	28.3	51								
M13	M11	36.4	18.5									41
M14	M15	98.0	10.8									115
M15	M16	28.9	21.6									
M16	M12	64.6	21.6									48
SUBTOTAL (CSJ 0086-14-023)		19033.8	3706.7	6861	0.0	0.0	0.0	0.0	728.0	0.0	0.0	3452

STATE OF TEXAS
RUDY L. GOMEZ
58664
REGISTERED PROFESSIONAL ENGINEER

The seal appearing on this document was authorized by Rudy L. Gomez P.E. 58664, on September 30, 1999.

DATE	BY	REV	REVISION
6/3/99	RG	1	TABLE
9/30/99	RG	2	QUANTITIES

© 1999 Texas Department of Transportation

Brown & Root
HOUSTON, TEXAS

IH 35/LOOP 20

SUMMARY OF STORM SEWER SYSTEM

SHEET 1 OF 6

FED RD DIV NO	STATE PROJECT NO	SHEET NO
6	NH-99(462)	52

STATE	STATE DIST NO	COUNTY
TEXAS	22	WEBB

CONT	SECT	JOB	HIGHWAY NO
0018	06	131	IH 35

SEE REVISION

REF FILE(S): J01LOX01.BDR LV ON - 16,45,47,57,60-62

09-30-99 BAR_HO_ES05 \HCIVIL\CF0039\PHASE2 D13QSX07.DGN-07

SUMMARY OF STORM SEWER SYSTEM

LINE FROM	LINE TO	400-513 STRUC EXCAV (SEWER) CY	400-514 CEM STAB BKFL (SEWER) CY	402-501 TRENCH EXCAV PROTECTION LF	403-501 TEMPORARY SPL SHORING LF	462-605 CONC BOX SEWER (SPL)(7 FT X 4 FT) PC-5 LF	462-555 CONC BOX SEWER (7 FT X 4 FT) PC-5 LF	462-560 CONC BOX SEWER (8 FT X 5 FT) PC-5 LF	462-565 CONC BOX SEWER (9 FT X 6FT) PC-5 LF	462-570 CONC BOX SEWER (10 FT X 6FT) PC-5 LF	464-559 RC PIPE (SEWER) (CL III)(18 IN) LF	464-561 RC PIPE (SEWER) (CL III)(24 IN) LF
LOOP 20 (CSJ 0086-14-023)												
G10	G19	3840.9	0.0	364					728			
G115	G116	72.7	16.8	75.5								75.5
G117	G116	4.5	1.3	5.5								5.5
G116	G119	127.5	22.2	100								100
G119	G39	161.8	27.0	123								123
G39	G113	144.2	46.9	104								104
G113	G23	216.3	86.1	112								
G38	G39	83.2	28.0	62								
G21	G113	332.9	85.4	130								
G22	G23	101.1	35.5	64								64
G23	G24	2283.0	456.9	518								
G120	G24	11.6	1.8	9								9
G24	G25	151.0	28.9	64								
G25	G26	1353.0	216.9	481								
G26	G87	107.1	61.7	70								
G87	G29	104.4	29.8	66								
G29	G103	461.1	206.4	234								
G98	G101	86.9	11.2	117								117
G101	G87	8.8	1.3									14
G30	G29	48.2	23.0	51								51
G31	G32	79.5	23.5	52								52
G32	G33	1319.3	260.4	470								470
G33	G34	85.1	29.9	54								
G34	G99	579.7	56.7	373								
G99	G88	80.0	35.5	54								
G88	G40	105.4	48.4	63								
G40	G102	483.2	186.9	243								
G89	G56	193.6	10.6	113								113
G56	G88	17.1	2.0									21
G35	G40	41.2	17.6	39								39
G49	G50	29.1	16.2									
G104	G105	62.5	24.4	54								54
G105	G32	1166.7	189.4	420								
G118	G21	115.1	16.4	74								74
G111	G21	73.9	25.7	57								
M1	M2	178.1	72.2	160								160
M2	M3	444.4	92.9	206								
M3	M4	326.7	57.2	87								
M4	M5	1060.0	203.7	231								
M5	OUTFALL	845.1	126.7	281								
M6	M2	42.3	21.6									48
M7	M8	614.4	236.8	525								525
M8	M3	113.6	46.9									104
M9	M10	355.5	189.9									421
M10	M11	226.0	96.1	213								213
M11	M12	390.7	131.2	291								291
M12	M4	77.4	28.3	51								
M13	M11	36.4	18.5									41
M14	M15	98.0	10.8									115
M15	M16	28.9	21.6									
M16	M12	64.6	21.6									48
SUBTOTAL (CSJ 0086-14-023)		19033.8	3706.7	6861	0.0	0.0	0.0	0.0	728.0	0.0	0.0	3452

STATE OF TEXAS
RUDY L. GOMEZ
58664
REGISTERED PROFESSIONAL ENGINEER

The seal appearing on this document was authorized by Rudy L. Gomez P.E. 58664, on January 28, 2000.

DATE	BY	REV	REVISION
6/3/99	RG	1	TABLE
9/30/99	RG	2	QUANTITIES

© 1999 Texas Department of Transportation

Brown & Root
HOUSTON, TEXAS

IH 35/LOOP 20

SUMMARY OF STORM SEWER SYSTEM

SHEET 1 OF 6

FED RD DIV NO	STATE PROJECT NO		SHEET NO
6	NH-99(462)		52
STATE	STATE DIST NO	COUNTY	
TEXAS	22	WEBB	
CONT	SECT	JOB	HIGHWAY NO
0018	06	131	IH 35

REF FILE(S): J01LOX01.BDR LV ON - 16,45,47,57,60-62

D13QSX07.DGN-07 09-30-99 BAR_HO_ES05 \HCIVIL\CF0039\PHASE2

SUMMARY OF STORM SEWER SYSTEM

LINE FROM	LINE TO	464-563 RC PIPE (SEWER) (CL III)(30 IN) LF	464-565 RC PIPE (SEWER) (CL III)(36 IN) LF	464-566 RC PIPE (SEWER) (CL III)(42 IN) LF	464-567 RC PIPE (SEWER) (CL III)(48 IN) LF	464-575 RC PIPE (SEWER) (CL IV)(18 IN) LF	464-576 RC PIPE (SEWER) (CL IV)(24 IN) LF	464-577 RC PIPE (SEWER) (CL IV)(30 IN) LF	464-578 RC PIPE (SEWER) (CL IV)(36 IN) LF	464-579 RC PIPE (SEWER) (CL IV)(42 IN) LF	464-580 RC PIPE (SEWER) (CL IV)(48 IN) LF
LOOP 20 (CSJ 0086-14-023)											
G10	G19										
G114	G116										
G115	G116										
G116	G39										
G39	G113										
G113	G23			112							
G38	G39						62				
G21	G113		130								
G22	G23										
G23	G24			518							
G24	G25				64						
G25	G26				481						
G26	G87										70
G87	G29				66						
G29	G103				234						
G98	G101										
G101	G87										
G30	G29										
G31	G32										
G32	G33										
G33	G34	54									
G34	G99	373									
G99	G88		54								
G88	G40			63							
G40	G102			243							
G89	G56										
G56	G88										
G35	G40										
G49	G50					45					
G104	G105										
G105	G32						420				
G111	G21	57									
M1	M2										
M2	M3						206				
M3	M4								87		
M4	M5										231
M5	OUTFALL				281						
M6	M2										
M7	M8										
M8	M3										
M9	M10										
M10	M11										
M11	M12										
M12	M4	51									
M13	M11										
M14	M15										
M15	M16										
M16	M12						48				
SUBTOTAL (CSJ 0086-14-23)		535.0	184.0	936.0	1126.0	45.0	736.0	0.0	87.0	0.0	301.0

STATE OF TEXAS
RUDY L. GOMEZ
58664
REGISTERED PROFESSIONAL ENGINEER

The seal appearing on this document was authorized by Rudy L. Gomez P.E. 58664, on April 2, 1999.

DATE	BY	REV	REVISION

© 1999 Texas Department of Transportation

Brown & Root
HOUSTON, TEXAS

IH 35/LOOP 20

SUMMARY OF STORM SEWER SYSTEM

SHEET 2 OF 6

FED RD DIV NO	STATE PROJECT NO		SHEET NO
6	NH-99(462)		53
STATE	STATE DIST NO		COUNTY
TEXAS	22		WEBB
CONT	SECT	JOB	HIGHWAY NO
0018	06	131	IH 35

D130SX08.DGN-03 04-03-99 BAR_HO_ES05 \HCIVIL\CF0039\PHASE2

SEE REVISION

SUMMARY OF STORM SEWER SYSTEM

LINE FROM	LINE TO	464-563 RC PIPE (SEWER) (CL III)(30 IN) LF	464-565 RC PIPE (SEWER) (CL III)(36 IN) LF	464-566 RC PIPE (SEWER) (CL III)(42 IN) LF	464-567 RC PIPE (SEWER) (CL III)(48 IN) LF	464-575 RC PIPE (SEWER) (CL IV)(18 IN) LF	464-576 RC PIPE (SEWER) (CL IV)(24 IN) LF	464-577 RC PIPE (SEWER) (CL IV)(30 IN) LF	464-578 RC PIPE (SEWER) (CL IV)(36 IN) LF	464-579 RC PIPE (SEWER) (CL IV)(42 IN) LF	464-580 RC PIPE (SEWER) (CL IV)(48 IN) LF
LOOP 20 (CSJ 0086-14-023)											
G10	G19										
G115	G116										
G117	G116										
G116	G119										
G119	G39										
G39	G113										
G113	G23			112							
G38	G39						62				
G21	G113		130								
G22	G23										
G23	G24			518							
G120	G24										
G24	G25				64						
G25	G26				481						
G26	G87										70
G87	G29				66						
G29	G103				234						
G98	G101										
G101	G87										
G30	G29										
G31	G32										
G32	G33										
G33	G34	54									
G34	G99	373									
G99	G88		54								
G88	G40			63							
G40	G102			243							
G89	G56										
G56	G88										
G35	G40										
G49	G50					45					
G104	G105										
G105	G32						420				
G118	G21										
G111	G21	57									
M1	M2										
M2	M3						206				
M3	M4								87		
M4	M5										231
M5	OUTFALL				281						
M6	M2										
M7	M8										
M8	M3										
M9	M10										
M10	M11										
M11	M12										
M12	M4	51									
M13	M11										
M14	M15										
M15	M16						48				
M16	M12										
SUBTOTAL (CSJ 0086-14-23)		535.0	184.0	936.0	1126.0	45.0	736.0	0.0	87.0	0.0	301.0

STATE OF TEXAS
RUDY L. GOMEZ
58664
REGISTERED PROFESSIONAL ENGINEER

The seal appearing on this document was authorized by Rudy L. Gomez P.E. 58664, on September 30, 1999.

DATE	BY	REV	REVISION
9/30/99	RG	1	QUANTITIES

© 1999 Texas Department of Transportation

Brown & Root
HOUSTON, TEXAS

IH 35/LOOP 20

SUMMARY OF STORM SEWER SYSTEM

SHEET 2 OF 6

FED RD DIV NO	STATE PROJECT NO		SHEET NO
6	NH-99(462)		53
STATE	STATE DIST NO		COUNTY
TEXAS	22		WEBB
CONT	SECT	JOB	HIGHWAY NO
0018	06	131	IH 35

SEE REVISION

REF FILE(S): J01LOX01.BDR LV ON • 16,45,47,57,60-62

D13QSX08.DGN-05 09-30-99 BAR_HO_ES05 \HCIVIL\CF0039\PHASE2

SUMMARY OF STORM SEWER SYSTEM

LINE FROM	LINE TO	464-563 RC PIPE (SEWER) (CL III)(30 IN) LF	464-565 RC PIPE (SEWER) (CL III)(36 IN) LF	464-566 RC PIPE (SEWER) (CL III)(42 IN) LF	464-567 RC PIPE (SEWER) (CL III)(48 IN) LF	464-575 RC PIPE (SEWER) (CL IV)(18 IN) LF	464-576 RC PIPE (SEWER) (CL IV)(24 IN) LF	464-577 RC PIPE (SEWER) (CL IV)(30 IN) LF	464-578 RC PIPE (SEWER) (CL IV)(36 IN) LF	464-579 RC PIPE (SEWER) (CL IV)(42 IN) LF	464-580 RC PIPE (SEWER) (CL IV)(48 IN) LF
LOOP 20 (CSJ 0086-14-023)											
G10	G19										
G115	G116										
G117	G116										
G116	G119										
G119	G39										
G39	G113										
G113	G23			112							
G38	G39						62				
G21	G113		130								
G22	G23										
G23	G24			518							
G120	G24										
G24	G25				64						
G25	G26				481						
G26	G87										70
G87	G29				66						
G29	G103				234						
G98	G101										
G101	G87										
G30	G29										
G31	G32										
G32	G33										
G33	G34	54									
G34	G99	373									
G99	G88		54								
G88	G40			63							
G40	G102			243							
G89	G56										
G56	G88										
G35	G40										
G49	G50					45					
G104	G105										
G105	G32						420				
G118	G21										
G111	G21	57									
M1	M2										
M2	M3						206				
M3	M4								87		
M4	M5										231
M5	OUTFALL				281						
M6	M2										
M7	M8										
M8	M3										
M9	M10										
M10	M11										
M11	M12										
M12	M4	51									
M13	M11										
M14	M15										
M15	M16						48				
M16	M12										
SUBTOTAL (CSJ 0086-14-23)		535.0	184.0	936.0	1126.0	45.0	736.0	0.0	87.0	0.0	301.0

STATE OF TEXAS
RUDY L. GOMEZ
58664
REGISTERED PROFESSIONAL ENGINEER

The seal appearing on this document was authorized by Rudy L. Gomez P.E. 58664, on January 28, 2000.

DATE	BY	REV	REVISION
9/30/99	RG	1	QUANTITIES

© 1999 Texas Department of Transportation

Brown & Root
HOUSTON, TEXAS

IH 35/LOOP 20

SUMMARY OF STORM SEWER SYSTEM

SHEET 2 OF 6

FED RD DIV NO	STATE PROJECT NO	SHEET NO
6	NH-99(462)	53

STATE	STATE DIST NO	COUNTY
TEXAS	22	WEBB

CONT	SECT	JOB	HIGHWAY NO
0018	06	131	IH 35

REF FILE(S): J01LOX01.BDR LV ON - 16,45,47,57,60-62

09-30-99 BAR_HO_ES05 \HCIVIL\CF0039\PHASE2 D13QSX08.DGN-05

SUMMARY OF STORM SEWER SYSTEM

LINE FROM	LINE TO	400-513 STRUC EXCAV (SEWER) CY	400-514 CEM STAB BKFL (SEWER) CY	402-501 TRENCH EXCAV PROTECTION LF	403-501 TEMPORARY SPL SHORING SF	462-557 CONC BOX SEWER (SPL)(7 FT X 6 FT) PC-5 (MOD) LF	462-555 CONC BOX SEWER (7 FT X 4 FT) PC-5 LF	462-560 CONC BOX SEWER (8 FT X 5 FT) PC-5 LF	462-565 CONC BOX SEWER (9 FT X 6FT) PC-5 LF	462-570 CONC BOX SEWER (10 FT X 6FT) PC-5 LF	464-559 RC PIPE (SEWER) (CL III)(18 IN) LF	464-561 RC PIPE (SEWER) (CL III)(24 IN) LF
IH 35 (CSJ 0018-06-131)												
R1	G1	990.0	0.0	135	176	270						
G1	G2	470.0	0.0	50			100					
G2	G3	748.9	0.0	41			82					
G3	G4	770.0	62.1	135				270				
G4	G5	456.3	35.4	77				154				
G5	G6	858.7	0.0	138				276				
G6	G7	344.0	0.0	54				108				
G7	G8	1221.5	0.0	194				388				
G8	G9	542.3	33.2	64					128			
G9	G10	940.5	61.7	119					238			
G79	G83	596.9	117.7	498								261
G83	G86	339.3	105.5									234
G86	G76	194.3	58.7	106								
G76	G69	1033.4	295.8	534								
G69	G3	14.4	2.3	10								
G78	G79	63.8	18.5	41								41
G75	G86	39.0	15.3	34								34
G60	G112	307.0	48.7	120								
G112	G71	14.3	1.2									13
G71	G72	50.3	17.1	38								38
G72	G76	41.9	13.5	30								30
G82	G83	176.4	46.9									104
G63	G68	7.8	0.8									9
G68	G69	32.3	16.2									
G103	G28	41.1	17.6	20								
G28	G5	114.8	48.5	55								
G100	G103	72.3	32.3									
G27	G103	36.6	18.3									
G102	G37	40.9	4.6	20								
G37	G7	173.9	64.6	84								
G55	G102	83.3	34.8	97								
G36	G102	60.3	20.5	57								
G41	G42	77.0	31.6	70								
G42	G43	225.9	105.4	137								
G43	G7	78.8	35.4	46								
G61	G42	129.6	10.1									107
G81	G77	24.9	19.8									
G77	G80	21.1	14.9									
G80	G84	334.3	178.1									395
G84	G73	433.3	246.5									
G73	G70	918.7	227.1	410								
G70	G110	389.3	135.3	206								
G48	G67	90.3	46.1	60								
G67	G46	207.1	98.4	128								
G46	G20	123.0	47.7	62								
G20	G8	423.0	83.4	185								
G85	G84	38.2	20.7									
G74	G73	44.9	20.7	46								46
G45	G70	42.4	20.3	45								45
G44	G62	545.5	13.4	143								
G62	G67	7.3	0.8	9								9
G50	G51	263.2	134.1	242								
G51	G20	75.6	35.5	64								
G66	G65	90.3	30.2	67								67
G65	G64	150.4	52.3	116								116
G64	G47	133.2	63.6	141								141
G47	G52	121.0	82.5									183
G52	G53	29.7	16.2									
G53	G54	185.5	104.5	159								
G54	G8	89.2	36.8	56								
G58	G47	31.9	22.1									
G57	G10	65.8	28.9	64								64
G108	G109	67.1	26.2	58								58
G109	G41	293.9	115.5	256								256
G110	G48	292.0	143.9	219								

SEE REVISION
REV. 6-25-99

STATE OF TEXAS
RUDY L. GOMEZ
58664
REGISTERED PROFESSIONAL ENGINEER

The seal appearing on this document was authorized by Rudy L. Gomez P.E. 58664, on June 16, 1999.

DATE	BY	REV	REVISION
06/03/99	RG	1	TABLE
06/17/99	RG	2	COLUMN 462-605

© 1999 Texas Department of Transportation

Brown & Root
HOUSTON, TEXAS

IH 35/LOOP 20

SUMMARY OF STORM SEWER SYSTEM

SHEET 3 OF 6

FED RD DIV NO	STATE PROJECT NO	SHEET NO
6	NH-99(462)	54

STATE	STATE DIST NO	COUNTY
TEXAS	22	WEBB

CONT	SECT	JOB	HIGHWAY NO
0018	06	131	IH 35

D13QSX09.DGN-06 06-17-99 BAR_HO_ES05 \HCIVIL\CF0039\PHASE2

SUMMARY OF STORM SEWER SYSTEM

LINE FROM	LINE TO	400-513 STRUC EXCAV (SEWER) CY	400-514 CEM STAB BKFL (SEWER) CY	402-501 TRENCH EXCAV PROTECTION LF	403-501 TEMPORARY SPL SHORING SF	462-605 CONC BOX SEWER (SPL)(7 FT X 6 FT) PC-5 (MOD) LF	462-555 CONC BOX SEWER (7 FT X 4 FT) PC-5 LF	462-560 CONC BOX SEWER (8 FT X 5 FT) PC-5 LF	462-565 CONC BOX SEWER (9 FT X 6FT) PC-5 LF	462-570 CONC BOX SEWER (10 FT X 6FT) PC-5 LF	464-559 RC PIPE (SEWER) (CL III)(18 IN) LF	464-561 RC PIPE (SEWER) (CL III)(24 IN) LF
IH 35 (CSJ 0018-06-131)												
R1	G1	990.0	0.0	135	176	270						
G1	G2	470.0	0.0	50			100					
G2	G3	748.9	0.0	41			82					
G3	G4	770.0	62.1	135				270				
G4	G5	456.3	35.4	77				154				
G5	G6	858.7	0.0	138				276				
G6	G7	344.0	0.0	54				108				
G7	G8	1221.5	0.0	194				388				
G8	G9	542.3	33.2	64					128			
G9	G10	940.5	61.7	119					238			
G79	G83	596.9	117.7	498								261
G83	G86	339.3	105.5									234
G86	G76	194.3	58.7	106								
G76	G69	1033.4	295.8	534								
G69	G3	14.4	2.3	10								
G78	G79	63.8	18.5	41								41
G75	G86	39.0	15.3	34								34
G60	G112	307.0	48.7	120								
G112	G71	14.3	1.2									13
G71	G72	50.3	17.1	38								38
G72	G76	41.9	13.5	30								30
G82	G83	176.4	46.9									104
G63	G68	7.8	0.8									9
G68	G69	32.3	16.2									
G103	G28	41.1	17.6	20								
G28	G5	114.8	48.5	55								
G100	G103	72.3	32.3									
G27	G103	36.6	18.3									
G102	G37	40.9	4.6	20								
G37	G7	173.9	64.6	84								
G55	G102	83.3	34.8	97								
G36	G102	60.3	20.5	57								
G41	G42	77.0	31.6	70								
G42	G43	225.9	105.4	137								
G43	G7	78.8	35.4	46								
G61	G42	129.6	10.1									107
G81	G77	24.9	19.8									
G77	G80	21.1	14.9									
G80	G84	334.3	178.1									395
G84	G73	433.3	246.5									
G73	G70	918.7	227.1	410								
G70	G110	389.3	135.3	206								
G48	G67	59.4	27.4	60								
G67	G46	207.1	98.4	128								
G46	G20	123.0	47.7	62								
G20	G8	423.0	83.4	185								
G85	G84	38.2	20.7									
G74	G73	44.9	20.7	46								46
G45	G70	42.4	20.3	45								45
G44	G62	545.5	13.4	143								
G62	G67	7.3	0.8	9								9
G50	G51	263.2	134.1	242								
G51	G20	75.6	35.5	64								
G66	G65	90.3	30.2	67								67
G65	G64	150.4	52.3	116								116
G64	G47	133.2	63.6	141								141
G47	G52	121.0	82.5									183
G52	G53	29.7	16.2									
G53	G54	185.5	104.5	159								
G54	G8	89.2	36.8	56								
G58	G47	31.9	22.1									
G57	G10	65.8	28.9	64								64
G108	G109	67.1	26.2	58								58
G109	G41	293.9	115.5	256								256
G117	G67	292.0	143.9	219								
G110	G117	75.6	39.6	60								

STATE OF TEXAS
RUDY L. GOMEZ
58664
REGISTERED PROFESSIONAL ENGINEER

The seal appearing on this document was authorized by Rudy L. Gomez P.E. 58664, on January 28, 2000.

DATE	BY	REV	REVISION
06/03/99	RG	1	TABLE
06/17/99	RG	2	COLUMN 462-605
11/29/99	RG	3	G117 ADDED

© 1999 Texas Department of Transportation

Brown & Root
HOUSTON, TEXAS

IH 35/LOOP 20

SUMMARY OF STORM SEWER SYSTEM

SHEET 3 OF 6

FED RD DIV NO	STATE PROJECT NO	SHEET NO
6	NH-99(462)	54

STATE	STATE DIST NO	COUNTY
TEXAS	22	WEBB

CONT	SECT	JOB	HIGHWAY NO
0018	06	131	IH 35

D13GSX09.DGN-07 11-29-99 BAR_HO_ES05 \HCIVIL\CF00039\PHASE2

SUMMARY OF STORM SEWER SYSTEM

LINE FROM	LINE TO	464-563 RC PIPE (SEWER) (CL III)(30 IN) LF	464-565 RC PIPE (SEWER) (CL III)(36 IN) LF	464-566 RC PIPE (SEWER) (CL III)(42 IN) LF	464-567 RC PIPE (SEWER) (CL III)(48 IN) LF	464-575 RC PIPE (SEWER) (CL IV)(18 IN) LF	464-576 RC PIPE (SEWER) (CL IV)(24 IN) LF	464-577 RC PIPE (SEWER) (CL IV)(30 IN) LF	464-578 RC PIPE (SEWER) (CL IV)(36 IN) LF	464-579 RC PIPE (SEWER) (CL IV)(42 IN) LF	464-580 RC PIPE (SEWER) (CL IV)(48 IN) LF
IH 35 (CSJ 0018-06-131)											
R1	G1										
G1	G2										
G2	G3										
G3	G4										
G4	G5										
G5	G6										
G6	G7										
G7	G8										
G8	G9										
G9	G10										
G79	G83										
G83	G86										
G86	G76	106									
G76	G69	534									
G69	G3			10							
G78	G79										
G75	G86										
G60	G112						108				
G112	G71										
G71	G72										
G72	G76										
G82	G83										
G63	G68										
G68	G69						36				
G103	G28				20						
G28	G5				55						
G100	G103					90					
G27	G103					51					
G102	G37			20							
G37	G7			84							
G55	G102					97					
G36	G102					57					
G41	G42						70				
G42	G43			137							
G43	G7			46							
G61	G42										
G81	G77						44				
G77	G80						33				
G80	G84										
G84	G73	445									
G73	G70	410									
G70	G110		206								
G48	G67									60	
G67	G46			128							
G46	G20			62							
G20	G8				185						
G85	G84						46				
G74	G73										
G45	G70										
G44	G62						143				
G62	G67										
G50	G51	242									
G51	G20	64									
G66	G65										
G65	G64										
G64	G47										
G47	G52										
G52	G53						36				
G53	G54		159								
G54	G8		56								
G58	G47						49				
G57	G10										
G108	G109										
G109	G41										
G110	G48		219								

SEE REVISION

STATE OF TEXAS
RUDY L. GOMEZ
58664
REGISTERED PROFESSIONAL ENGINEER

The seal appearing on this document was authorized by Rudy L. Gomez P.E. 58664, on April 2, 1999.

DATE	BY	REV	REVISION

© 1999 Texas Department of Transportation

Brown & Root
HOUSTON, TEXAS

IH 35/LOOP 20

SUMMARY OF STORM SEWER SYSTEM

SHEET 4 OF 6

FED RD DIV NO	STATE PROJECT NO	SHEET NO
6	NH-99(462)	55

STATE	STATE DIST NO	COUNTY
TEXAS	22	WEBB

CONT	SECT	JOB	HIGHWAY NO
0018	06	131	IH 35

D13QSX10.DGN-02 04-02-99 BAR_HO_ES05 \HCIVIL\CF0039\PHASE2

SUMMARY OF STORM SEWER SYSTEM

LINE FROM	LINE TO	464-563 RC PIPE (SEWER) (CL III)(30 IN) LF	464-565 RC PIPE (SEWER) (CL III)(36 IN) LF	464-566 RC PIPE (SEWER) (CL III)(42 IN) LF	464-567 RC PIPE (SEWER) (CL III)(48 IN) LF	464-575 RC PIPE (SEWER) (CL IV)(18 IN) LF	464-576 RC PIPE (SEWER) (CL IV)(24 IN) LF	464-577 RC PIPE (SEWER) (CL IV)(30 IN) LF	464-578 RC PIPE (SEWER) (CL IV)(36 IN) LF	464-579 RC PIPE (SEWER) (CL IV)(42 IN) LF	464-580 RC PIPE (SEWER) (CL IV)(48 IN) LF
IH 35 (CSJ 0018-06-131)											
R1	G1										
G1	G2										
G2	G3										
G3	G4										
G4	G5										
G5	G6										
G6	G7										
G7	G8										
G8	G9										
G9	G10										
G79	G83										
G83	G86										
G86	G76	106									
G76	G69	534									
G69	G3			10							
G78	G79										
G75	G86										
G60	G112						108				
G112	G71										
G71	G72										
G72	G76										
G82	G83										
G63	G68										
G68	G69						36				
G103	G28				20						
G28	G5				55						
G100	G103					90					
G27	G103					51					
G102	G37			20							
G37	G7			84							
G55	G102					97					
G36	G102					57					
G41	G42						70				
G42	G43			137							
G43	G7			46							
G61	G42										
G81	G77						44				
G77	G80						33				
G80	G84										
G84	G73	445									
G73	G70	410									
G70	G110		206								
G48	G67						60				
G67	G46			128							
G46	G20			62							
G20	G8				185						
G85	G84						46				
G74	G73										
G45	G70										
G44	G62						143				
G62	G67										
G50	G51	242									
G51	G20	64									
G66	G65										
G65	G64										
G64	G47										
G47	G52										
G52	G53						36				
G53	G54		159								
G54	G8		56								
G58	G47						49				
G57	G10										
G108	G109										
G109	G41										
G117	G67										
G110	G117								60		

STATE OF TEXAS
RUDY L. GOMEZ
58664
REGISTERED PROFESSIONAL ENGINEER

The seal appearing on this document was authorized by Rudy L. Gomez P.E. 58664, on January 28, 2000.

DATE	BY	REV	REVISION
12/7/99	RG	1	G117 ADDED

© 1999 Texas Department of Transportation

Brown & Root
HOUSTON, TEXAS

IH 35/LOOP 20

SUMMARY OF STORM SEWER SYSTEM

SHEET 4 OF 6

FED RD DIV NO	STATE PROJECT NO		SHEET NO
6	NH-99(462)		55
STATE	STATE DIST NO	COUNTY	
TEXAS	22	WEBB	
CONT	SECT	JOB	HIGHWAY NO
0018	06	131	IH 35

D13QSX10.DGN-03 12-07-99 BAR_HO_ES05 \HCIVIL\CF0039\PHASE2

SUMMARY OF STORM SEWER SYSTEM

LINE FROM	LINE TO	400-513 STRUC EXCAV (SEWER) CY	400-514 CEM STAB BKFL (SEWER) CY	402-501 TRENCH EXCAV PROTECTION LF	403-501 TEMPORARY SPL SHORING SF	462-605 CONC BOX SEWER (SPL)(7 FT X 4 FT) PC-5 LF	462-555 CONC BOX SEWER (7 FT X 4 FT) PC-5 LF	462-560 CONC BOX SEWER (8 FT X 5 FT) PC-5 LF	462-565 CONC BOX SEWER (9 FT X 6FT) PC-5 LF	462-570 CONC BOX SEWER (10 FT X 6FT) PC-5 LF	464-559 RC PIPE (SEWER) (CL III)(18 IN) LF	464-561 RC PIPE (SEWER) (CL III)(24 IN) LF
N1	OUTFALL	44.5	4.4	47								47
N2	OUTFALL	117.1	10.3	110								110
N3	OUTFALL											
N4	OUTFALL	150.7	13.5	144								144
N5	OUTFALL	30.6	3.0	32								32
N6	OUTFALL	29.4	2.8	30								30
				0								
L10	L11	135.4	11.0	117								117
L11	L14	52.1	5.5	36								
L14	OUTFALL	426.8	45.0	238								
L4	L5	64.5	24.4	54								54
L5	L13	40.6	14.9	33								33
L13	L22	145.5	50.1	111								111
L22	L21	490.8	158.8	352								352
L21	L18	470.3	133.5	296								296
L1	L22	57.3	19.4	43								43
L20	L21	72.6	33.4	74								74
L17	L2	9.6	1.2									13
L2	OUTFALL	367.0	37.0	394								394
L7	L6	391.2	46.7									497
L6	OUTFALL	663.1	68.2	449								
				0								
K6	K9	52.0	17.6	39								39
K9	OUTFALL	440.5	33.4	355								355
SUBTOTAL	(0018-06-131)	21172.0	4174.3	8694	176	270	182	1196	366	0	0	4992
TOTAL		39743.2	7792.1	15213	176	270	182	1196	1094	0	0	8106

STATE OF TEXAS
RUDY L. GOMEZ
58664
REGISTERED PROFESSIONAL ENGINEER

The seal appearing on this document was authorized by Rudy L. Gomez P.E. 58664, on June 3, 1999.

DATE	BY	REV	REVISION
06/03/99	RG	1	TABLE

© 1999 Texas Department of Transportation

Brown & Root
HOUSTON, TEXAS

IH 35/LOOP 20

SUMMARY OF STORM SEWER SYSTEM

SHEET 5 OF 6

FED RD DIV NO	STATE PROJECT NO	SHEET NO
6	NH-99(462)	56

STATE	STATE DIST NO	COUNTY
TEXAS	22	WEBB

CONT	SECT	JOB	HIGHWAY NO
0018	06	131	IH 35

SEE REVISION
REV. 6-25-99

D13QSX11.DGN-04 06-02-99 BAR_HO_ES05 \HCIVIL\CF0039\PHASE2

SUMMARY OF STORM SEWER SYSTEM

LINE FROM	LINE TO	400-513 STRUC EXCAV (SEWER) CY	400-514 CEM STAB BKFL (SEWER) CY	402-501 TRENCH EXCAV PROTECTION LF	403-501 TEMPORARY SPL SHORING SF	462-605 CONC BOX SEWER (SPL)(7 FT X 4 FT) PC-5 LF	462-555 CONC BOX SEWER (7 FT X 4 FT) PC-5 LF	462-560 CONC BOX SEWER (8 FT X 5 FT) PC-5 LF	462-565 CONC BOX SEWER (9 FT X 6FT) PC-5 LF	462-570 CONC BOX SEWER (10 FT X 6FT) PC-5 LF	464-559 RC PIPE (SEWER) (CL III)(18 IN) LF	464-561 RC PIPE (SEWER) (CL III)(24 IN) LF
N1	OUTFALL	44.5	4.4	47								47
N2	OUTFALL	117.1	10.3	110								110
N3	OUTFALL											
N4	OUTFALL	150.7	13.5	144								144
N5	OUTFALL	30.6	3.0	32								32
N6	OUTFALL	29.4	2.8	30								30
				0								
L10	L11	135.4	11.0	117								117
L11	L14	52.1	5.5	36								
L14	OUTFALL	426.8	45.0	238								
L4	L5	64.5	24.4	54								54
L5	L13	40.6	14.9	33								33
L13	L22	145.5	50.1	111								111
L22	L21	490.8	158.8	352								352
L21	L18	470.3	133.5	296								296
L1	L22	57.3	19.4	43								43
L20	L21	72.6	33.4	74								74
L17	L2	9.6	1.2									13
L2	OUTFALL	367.0	37.0	394								394
L7	L6	391.2	46.7									497
L6	OUTFALL	663.1	68.2	449								
				0								
K6	K9	52.0	17.6	39								39
K9	OUTFALL	440.5	33.4	355								355
SUBTOTAL	(0018-06-131)	21172.0	4174.3	8694	176	270	182	1196	366	0	0	4992
TOTAL		40205.8	7881.0	15555	176	270	182	1196	1094	0	0	8444

STATE OF TEXAS
RUDY L. GOMEZ
58664
REGISTERED PROFESSIONAL ENGINEER

The seal appearing on this document was authorized by Rudy L. Gomez P.E. 58664, on September 30, 1999.

DATE	BY	REV	REVISION
06/03/99	RG	1	TABLE
9/30/99	RG	2	QUANTITIES

© 1999 Texas Department of Transportation

Brown & Root
HOUSTON, TEXAS

IH 35/LOOP 20

SUMMARY OF STORM SEWER SYSTEM

SHEET 5 OF 6

FED RD DIV NO	STATE PROJECT NO		SHEET NO
6	NH-99(462)		56
STATE	STATE DIST NO	COUNTY	
TEXAS	22	WEBB	
CONT	SECT	JOB	HIGHWAY NO
0018	06	131	IH 35

SEE REVISION

REF FILE(S): J01LOX01.BDR LV ON - 16,45,47,57,60-62

D13QSX11.DGN-07 09-30-99 BAR_HO_ES05 \HCIVIL\CF0039\PHASE2

SUMMARY OF STORM SEWER SYSTEM

LINE FROM	LINE TO	400-513 STRUC EXCAV (SEWER) CY	400-514 CEM STAB BKFL (SEWER) CY	402-501 TRENCH EXCAV PROTECTION LF	403-501 TEMPORARY SPL SHORING SF	462-605 CONC BOX SEWER (SPL)(7 FT X 4 FT) PC-5 LF	462-555 CONC BOX SEWER (7 FT X 4 FT) PC-5 LF	462-560 CONC BOX SEWER (8 FT X 5 FT) PC-5 LF	462-565 CONC BOX SEWER (9 FT X 6FT) PC-5 LF	462-570 CONC BOX SEWER (10 FT X 6FT) PC-5 LF	464-559 RC PIPE (SEWER) (CL III)(18 IN) LF	464-561 RC PIPE (SEWER) (CL III)(24 IN) LF
N1	OUTFALL	44.5	4.4	47								47
N2	OUTFALL	117.1	10.3	110								110
N3	OUTFALL											
N4	OUTFALL	150.7	13.5	144								144
N5	OUTFALL	30.6	3.0	32								32
N6	OUTFALL	29.4	2.8	30								30
				0								
L10	L11	135.4	11.0	117								117
L11	L14	52.1	5.5	36								
L14	OUTFALL	426.8	45.0	238								
L4	L5	64.5	24.4	54								54
L5	L13	40.6	14.9	33								33
L13	L22	145.5	50.1	111								111
L22	L21	490.8	158.8	352								352
L21	L18	470.3	133.5	296								296
L1	L22	57.3	19.4	43								43
L20	L21	72.6	33.4	74								74
L17	L2	9.6	1.2									13
L2	OUTFALL	367.0	37.0	394								394
L7	L6	391.2	46.7									497
L6	OUTFALL	663.1	68.2	449								
				0								
K6	K9	72.6	25.1	55								55
K9	K10	39.6	13.7	30								30
K10	OUTFALL	435.6	150.6	330								330
SUBTOTAL	(0018-06-131)	21271.5	4333.2	8775	176	270	182	1196	366	0	0	5013
TOTAL		40305.3	8039.9	15636	176	270	182	1196	1094	0	0	8127

STATE OF TEXAS
RUDY L. GOMEZ
58664
REGISTERED PROFESSIONAL ENGINEER

The seal appearing on this document was authorized by Rudy L. Gomez P.E. 58664, on January 28, 2000.

DATE	BY	REV	REVISION
06/03/99	RG	1	TABLE
9/30/99	RG	2	QUANTITIES
11/22/99	RG	3	QUANTITIES

© 1999 Texas Department of Transportation

Brown & Root
HOUSTON, TEXAS

IH 35/LOOP 20

SUMMARY OF STORM SEWER SYSTEM

SHEET 5 OF 6

FED RD DIV NO	STATE PROJECT NO	SHEET NO
6	NH-99(462)	56

STATE	STATE DIST NO	COUNTY
TEXAS	22	WEBB

CONT	SECT	JOB	HIGHWAY NO
0018	06	131	IH 35

REF FILE(S): J01LOX01.BDR LV ON • 16,45,47,57,60-62

D130SX11.DGN-10 12-01-99 BAR_HO_ES05 \HCIVIL\CF0039\PHASE2

SUMMARY OF STORM SEWER SYSTEM

FROM	TO	464-563 RC PIPE (SEWER) (CL III)(30 IN) LF	464-565 RC PIPE (SEWER) (CL III)(36 IN) LF	464-566 RC PIPE (SEWER) (CL III)(42 IN) LF	464-567 RC PIPE (SEWER) (CL III)(48 IN) LF	464-575 RC PIPE (SEWER) (CL IV)(18 IN) LF	464-576 RC PIPE (SEWER) (CL IV)(24 IN) LF	464-577 RC PIPE (SEWER) (CL IV)(30 IN) LF	464-578 RC PIPE (SEWER) (CL IV)(36 IN) LF	464-579 RC PIPE (SEWER) (CL IV)(42 IN) LF	464-580 RC PIPE (SEWER) (CL IV)(48 IN) LF
N1	OUTFALL										
N2	OUTFALL										
N3	OUTFALL										
N4	OUTFALL										
N5	OUTFALL										
N6	OUTFALL										
L10	L11										
L11	L14	36									
L14	OUTFALL		238								
L4	L5										
L5	L13										
L13	L22										
L22	L21										
L21	L18										
L1	L22										
L20	L21										
L17	L2										
L2	OUTFALL										
L7	L6										
L6	OUTFALL	449									
K6	K9										
K9	OUTFALL										
SUBTOTAL	0018-06-131	2286	878	487	260	295	565	0	0	60	0
TOTAL		2821	1062	1423	1386	340	1301	0	87	60	301

STATE OF TEXAS
RUDY L. GOMEZ
58664
REGISTERED PROFESSIONAL ENGINEER

The seal appearing on this document was authorized by Rudy L. Gomez P.E. 58664, on April 2, 1999.

DATE	BY	REV	REVISION

© 1999 Texas Department of Transportation

Brown & Root
HOUSTON, TEXAS

IH 35/LOOP 20

SUMMARY OF STORM SEWER SYSTEM

SHEET 6 OF 6

FED RD DIV NO	STATE PROJECT NO		SHEET NO
6	NH-99(462)		57
STATE	STATE DIST NO		COUNTY
TEXAS	22		WEBB
CONT	SECT	JOB	HIGHWAY NO
0018	06	131	IH 35

D13QSX12.DGN-02 04-02-99 BAR_HO_ES05 \HCIVIL\CF0039\PHASE2

SEE REVISION

SUMMARY OF STORM SEWER SYSTEM

FROM	TO	464-563 RC PIPE (SEWER) (CL III)(30 IN) LF	464-565 RC PIPE (SEWER) (CL III)(36 IN) LF	464-566 RC PIPE (SEWER) (CL III)(42 IN) LF	464-567 RC PIPE (SEWER) (CL III)(48 IN) LF	464-575 RC PIPE (SEWER) (CL IV)(18 IN) LF	464-576 RC PIPE (SEWER) (CL IV)(24 IN) LF	464-577 RC PIPE (SEWER) (CL IV)(30 IN) LF	464-578 RC PIPE (SEWER) (CL IV)(36 IN) LF	464-579 RC PIPE (SEWER) (CL IV)(42 IN) LF	464-580 RC PIPE (SEWER) (CL IV)(48 IN) LF
N1	OUTFALL										
N2	OUTFALL										
N3	OUTFALL										
N4	OUTFALL										
N5	OUTFALL										
N6	OUTFALL										
L10	L11										
L11	L14	36									
L14	OUTFALL		238								
L4	L5										
L5	L13										
L13	L22										
L22	L21										
L21	L18										
L1	L22										
L20	L21										
L17	L2										
L2	OUTFALL										
L7	L6										
L6	OUTFALL	449									
K6	K9										
K9	K10										
K10	OUTFALL										
SUBTOTAL		2286	878	487	260	295	625	0	60	0	0
TOTAL		2821	1062	1423	1386	340	1361	0	147	0	301

STATE OF TEXAS
RUDY L. GOMEZ
58664
REGISTERED PROFESSIONAL ENGINEER

The seal appearing on this document was authorized by Rudy L. Gomez P.E. 58664, on January 28, 2000.

DATE	BY	REV	REVISION
12/7/99	RG	1	K10 ADDED

© 1999 Texas Department of Transportation

Brown & Root
HOUSTON, TEXAS

IH 35/LOOP 20

SUMMARY OF STORM SEWER SYSTEM

SHEET 6 OF 6

FED RD DIV NO	STATE PROJECT NO		SHEET NO
6	NH-99(462)		57
STATE	STATE DIST NO		COUNTY
TEXAS	22		WEBB
CONT	SECT	JOB	HIGHWAY NO
0018	06	131	IH 35

D13QSX12.DGN-01 12-01-99 BAR_HO_ES05 \HCIVIL\CF0039\PHASE2

SUMMARY OF INLETS & MANHOLES (JUNCTION BOX)

DESIGN	LOCATION	465-0501 INLET (COMPL) (TY A) EA	465-0503 INLET (COMPL) (TY C) EA	465-0510 MANH (COMP) (TY A) EA	465-0514 INLET EXT (TY C) EA	465-0517 INLET (COMPL) (TY AD) EA	465-0518 INLET (COMPL) TY AAD EA	465-0559 MANH (COMP) (TY M) (MOD) EA	465-0551 INLET (COMPL) (TY C1) EA	465- INLET EXT (TY C1) EA	465-3512 INLET (COMPL) TY AZR EA	465-0987 INLET (COMPL) TY ADR EA	465-0545 INLET (COMPL) TY H(MOD) EA	479-0502 ADJUST INLETS (COMPL) EA
	LOOP 20 (CSJ 0086-14-023)													
E11	"LP 20 WB FRTG RD STA 411+73.62 82.88' RT"													1
G101	"LP 20 WB FRTG RD STA 444+15 45' LT"	1												
G104	"LP 20 EB FRTG RD STA 457+00 40.50' LT"					1								
G105	"LP 20 EB FRTG RD STA 457+00 14' RT"		1		2									
G107	"LP 20 EB FRTG RD STA 431+25 22' RT"		1		1									
G11	"LP 20 EB FRTG RD STA 428+90 56' LT"							1						
G111	"LP 20 WB FRTG RD STA 456+70 33.50' RT"						1							
G113	"GRAND CENTRAL RD STA 10+28			1										
G12	"LP 20 EB FRTG RD STA 427+55 78' LT"							1						
G13	"LP 20 EB FRTG RD STA 424+10 83' LT"							1						
G19	"LP 20 EB FRTG RD STA 431+25 36' LT"							1						
G21	"LP 20 WB FRTG RD STA 456+70 26' LT"		1		2									
G22	"LP 20 WB FRTG RD STA 454+20 26' RT"						1							
G23	"LP 20 WB FRTG RD STA 454+20 22' LT"		1		2									
G24	"LP 20 WB FRTG RD STA 449+00 26' LT"		1		2									
G25	"LP 20 WB FRTG RD STA 449+00 40.50' RT"						1							
G26	"LP 20 WB FRTG RD STA 444+15 45' RT"					1								
G29	"LP 20 WB FRTG RD STA 443+45 26' LT"								1	1				
G30	"LP 20 WB FRTG RD STA 443+45 25' RT"								1					
G31	"LP 20 EB FRTG RD STA 452+75 40.50' LT"					1								
G32	"LP 20 EB FRTG RD STA 452+75 14' RT"		1		2									
G33	"LP 20 EB FRTG RD STA 448+00 14' RT"		1		1									
G34	"LP 20 EB FRTG RD STA 448+00 40.50' LT"					1								
G35	"LP 20 EB FRTG RD STA 443+61 25' LT"								1					
G38	"GRAND CENTRAL RD STA 11+35 31' LT"		1											
G39	"GRAND CENTRAL RD STA 11+35 31' RT"		1											
G40	"LP 20 EB FRTG RD STA 443+61 14' RT"								1					
G49	"LP 20 WB FRTG RD STA 435+83 14' LT"		1		1									
G50	"LP 20 WB FRTG RD STA 435+83 33.50' RT"					1								
G56	"LP 20 EB FRTG RD STA 444+25 40' RT"	1												
G87	"LP 20 WB FRTG RD STA 444+15 28.50' LT"			1										
G88	"LP 20 EB FRTG RD STA 444+25 16.50' RT"			1										
G89	"LP 20 EB FRTG RD STA 445+40 40' RT"	1												
G91	"LP 20 EB FRTG RD STA 427+70 22' RT"		1		1									
G98	"LP 20 WB FRTG RD STA 445+90 45' LT"	1												
G99	"LP 20 EB FRTG RD STA 444+25 40.50' LT"					1								
F6	"LP 20 WB FRTG RD STA 409+94 50.20' RT"										1			
F8	"LP 20 EB FRTG RD STA 407+05 35' LT"										1			
F5	"LP 20 WB FRTG RD STA 413+60 31.80' RT"										1			
F16	"LP 20 WB FRTG RD STA 414+76.50 28.38' RT"										1			
F18	"LP 20 WB FRTG RD STA 415+96.50 61.75' RT"										1			
F20	"LP 20 WB FRTG RD STA 417+40 61.02' RT"										1			
M1	"McPHERSON RD STA 4+40 41' LT"		1		1									
M2	"McPHERSON RD STA 6+08 41' LT"		1		1									
M3	"LP 20 EB FRTG RD STA 497+38 27' RT"			1										
M4	"LP 20 EB FRTG RD STA 498+28 27' RT"			1										
M5	"LP 20 EB FRTG RD STA 500+67 26' RT"		1		1									
M6	"McPHERSON RD STA 6+15 6' RT"		1		1									
M7	"LP 20 EB FRTG RD STA 491+00 22' RT"		1		1									
M8	"LP 20 EB FRTG RD STA 496+30 26' RT"		1		1									
M9	"McPHERSON RD STA 18+17 32.50' RT"		1		2									
M10	"McPHERSON RD STA 13+92 41' RT"		1		2									
M11	"LP 20 WB FRTG RD STA 498+27 39' LT"			1										
M12	"LP 20 EB FRTG RD STA 498+25 28' LT"		1											
M13	"LP 20 WB FRTG RD STA 497+82 45' LT"		1		1									
M14	"McPHERSON RD STA 10+00 56' LT"		1		1									
M15	"LP 20 EB FRTG RD STA 497+43 28' LT"		1											
M16	"LP 20 EB FRTG RD STA 497+82 48' LT"		1											
	SUBTOTAL (CSJ 0086-14-023)	4	25	6	27	7	4	4	4	1	6	0	0	1

SEE REVISION
REV. 6-25-99

STATE OF TEXAS
RUDY L. GOMEZ
R. 58664
REGISTERED PROFESSIONAL ENGINEER

The seal appearing on this document was authorized by Rudy L. Gomez P.E. 58664, on June 3, 1999.

DATE	BY	REV	REVISION
06/03/99	RG	1	TABLE

© 1999 Texas Department of Transportation

Brown & Root
HOUSTON, TEXAS

IH 35/LOOP 20

SUMMARY OF INLETS AND MANHOLES

SHEET 1 OF 3

FED RD DIV NO	STATE PROJECT NO	SHEET NO
6	C86-14-23	58

STATE	STATE DIST NO	COUNTY
TEXAS	22	WEBB

CONT	SECT	JOB	HIGHWAY NO
0086	14	023	LOOP 20

D13GSX04.DGN-03 06-02-99 BAR_HO_ES05 \HCIVIL\CF0039\PHASE2

SUMMARY OF INLETS & MANHOLES (JUNCTION BOX)

DESIGN	LOCATION	465-0501 INLET (COMPL) (TY A) EA	465-0503 INLET (COMPL) (TY C) EA	465-0510 MANH (COMP) (TY A) EA	465-0514 INLET EXT (TY C) EA	465-0517 INLET (COMPL) (TY AD) EA	465-0518 INLET (COMPL) TY AAD EA	465-0559 MANH (COMP) (TY M) (MOD) EA	465-0551 INLET (COMPL) (TY C1) EA	465- INLET EXT (TY C1) EA	465-3512 INLET (COMPL) TY AZR EA	465-0987 INLET (COMPL) TY ADR EA	465-0545 INLET (COMPL) TY H(MOD) EA	479-0502 ADJUST INLETS (COMPL) EA
	LOOP 20 (CSJ 0086-14-023)													
E11	LP 20 WB FRTG RD STA 411+73.62 82.88' RT													1
G101	LP 20 WB FRTG RD STA 444+15 45' LT	1												
G104	LP 20 EB FRTG RD STA 457+00 40.50' LT					1								
G105	LP 20 EB FRTG RD STA 457+00 14' RT		1		2									
G107	LP 20 EB FRTG RD STA 431+25 22' RT		1		1									
G11	LP 20 EB FRTG RD STA 428+90 56' LT							1						
G111	LP 20 WB FRTG RD STA 456+70 33.50' RT						1							
G113	GRAND CENTRAL RD STA 10+28			1										
G118	LP 20 WB FRTG RD STA 457+44 47' LT	1												
G12	LP 20 EB FRTG RD STA 427+55 78' LT							1						
G13	LP 20 EB FRTG RD STA 424+10 83' LT							1						
G19	LP 20 EB FRTG RD STA 431+25 36' LT							1						
G21	LP 20 WB FRTG RD STA 456+70 26' LT		1		2									
G22	LP 20 WB FRTG RD STA 454+20 26' RT						1							
G23	LP 20 WB FRTG RD STA 454+20 30.45' LT		1		2									
G24	LP 20 WB FRTG RD STA 449+00 26' LT		1		2									
G25	LP 20 WB FRTG RD STA 449+00 40.50' RT						1							
G26	LP 20 WB FRTG RD STA 444+15 45' RT					1								
G29	LP 20 WB FRTG RD STA 443+45 26' LT								1	1				
G30	LP 20 WB FRTG RD STA 443+45 25' RT								1					
G31	LP 20 EB FRTG RD STA 452+75 40.50' LT					1								
G32	LP 20 EB FRTG RD STA 452+75 14' RT		1		2									
G33	LP 20 EB FRTG RD STA 448+00 14' RT		1		1									
G34	LP 20 EB FRTG RD STA 448+00 40.50' LT					1								
G115	GRAND CENTRAL RD STA 13+58 40.50' LT	1												
G116	GRAND CENTRAL RD STA 13+58 35' RT			1										
G117	GRAND CENTRAL RD STA 13+58 40.50' RT	1												
G119	GRAND CENTRAL RD STA 12+58 33' RT			1										
G35	LP 20 EB FRTG RD STA 443+61 25' LT								1					
G38	GRAND CENTRAL RD STA 11+35 31' LT		1											
G39	GRAND CENTRAL RD STA 11+35 31' RT		1											
G40	LP 20 EB FRTG RD STA 443+61 14' RT								1					
G49	LP 20 WB FRTG RD STA 435+83 14' LT		1		1									
G50	LP 20 WB FRTG RD STA 435+83 33.50' RT					1								
G56	LP 20 EB FRTG RD STA 444+25 40' RT	1												
G87	LP 20 WB FRTG RD STA 444+15 28.50' LT			1										
G88	LP 20 EB FRTG RD STA 444+25 16.50' RT			1										
G89	LP 20 EB FRTG RD STA 445+40 40' RT	1												
G91	LP 20 EB FRTG RD STA 427+70 22' RT		1		1									
G98	LP 20 WB FRTG RD STA 445+32 35' LT	1												
G99	LP 20 EB FRTG RD STA 444+25 40.50' LT					1								
G120	LP 20 WB FRTG RD STA 449+00 35' LT											1		
F6	LP 20 WB FRTG RD STA 409+94 50.20' RT										1			
F8	LP 20 EB FRTG RD STA 407+05 35' LT										1			
F5	LP 20 WB FRTG RD STA 413+60 31.80' RT										1			
F16	LP 20 WB FRTG RD STA 414+76.50 28.38' RT										1			
F18	LP 20 WB FRTG RD STA 415+96.50 61.75' RT										1			
F20	LP 20 WB FRTG RD STA 417+40 61.02' RT										1			
M1	McPHERSON RD STA 4+40 41' LT		1		1									
M2	McPHERSON RD STA 6+08 41' LT		1		1									
M3	LP 20 EB FRTG RD STA 497+38 27' RT			1										
M4	LP 20 EB FRTG RD STA 498+28 27' RT			1										
M5	LP 20 EB FRTG RD STA 500+67 26' RT		1		1									
M6	McPHERSON RD STA 6+15 6' RT		1		1									
M7	LP 20 EB FRTG RD STA 491+00 22' RT		1		1									
M8	LP 20 EB FRTG RD STA 496+30 26' RT		1		1									
M9	McPHERSON RD STA 18+17 32.50' RT		1		2									
M10	McPHERSON RD STA 13+92 41' RT		1		2									
M11	LP 20 WB FRTG RD STA 498+27 39' LT			1										
M12	LP 20 EB FRTG RD STA 498+25 28' LT		1											
M13	LP 20 WB FRTG RD STA 497+82 45' LT		1		1									
M14	McPHERSON RD STA 10+00 56' LT		1		1									
M15	LP 20 EB FRTG RD STA 497+43 28' LT		1											
M16	LP 20 EB FRTG RD STA 497+82 48' LT		1											
	SUBTOTAL (CSJ 0086-14-023)	7	25	8	27	7	4	4	4	1	6	1	0	1

SEE REVISION

STATE OF TEXAS
RUDY L. GOMEZ
58664
REGISTERED PROFESSIONAL ENGINEER

The seal appearing on this document was authorized by Rudy L. Gomez P.E. 58664, on September 30, 1999.

DATE	BY	REV	REVISION
06/03/99	RG	1	TABLE
06/29/99	RG	2	G118,G115,G116,G117 & G119

© 1999 Texas Department of Transportation

Brown & Root
HOUSTON, TEXAS

IH 35/LOOP 20

SUMMARY OF INLETS AND MANHOLES

SHEET 1 OF 3

FED RD DIV NO	STATE PROJECT NO		SHEET NO
6	C86-14-23		58
STATE	STATE DIST NO		COUNTY
TEXAS	22		WEBB
CONT	SECT	JOB	HIGHWAY NO
0086	14	023	LOOP 20

REF FILE(S): J01LOX01.BDR LV ON • 16,45,47,57,60-62

D13QSX04.DGN-05 09-30-99 BAR_HO_ES05 \HCIVIL\CF0039\PHASE2

SUMMARY OF INLETS & MANHOLES (JUNCTION BOX)

DESIGN	LOCATION	465-0501 INLET (COMPL) (TY A) EA	465-0503 INLET (COMPL) (TY C) EA	465-0510 MANH (COMP) (TY A) EA	465-0514 INLET EXT (TY C) EA	465-0517 INLET (COMPL) (TY AD) EA	465-0518 INLET (COMPL) TY AAD EA	465-0559 MANH (COMP) (TY M) (MOD) EA	465-0551 INLET (COMPL) (TY C1) EA	465- INLET EXT (TY C1) EA	465-3512 INLET (COMPL) TY AZR EA	465-0987 INLET (COMPL) TY ADR EA	465-0545 INLET (COMPL) TY H(MOD) EA	479-0502 ADJUST INLETS (COMPL) EA
	LOOP 20 (CSJ 0086-14-023)													
E11	LP 20 WB FRTG RD STA 411+73.62 82.88' RT													1
G101	LP 20 WB FRTG RD STA 444+15 45' LT	1												
G104	LP 20 EB FRTG RD STA 457+00 40.50' LT					1								
G105	LP 20 EB FRTG RD STA 457+00 14' RT		1		2									
G107	LP 20 EB FRTG RD STA 431+25 22' RT		1		1									
G11	LP 20 EB FRTG RD STA 428+90 56' LT							1						
G111	LP 20 WB FRTG RD STA 456+70 33.50' RT						1							
G113	GRAND CENTRAL RD STA 10+28			1										
G118	LP 20 WB FRTG RD STA 457+44 47' LT	1												
G12	LP 20 EB FRTG RD STA 427+55 78' LT							1						
G13	LP 20 EB FRTG RD STA 424+10 83' LT							1						
G19	LP 20 EB FRTG RD STA 431+25 36' LT							1						
G21	LP 20 WB FRTG RD STA 456+70 26' LT		1		2									
G22	LP 20 WB FRTG RD STA 454+20 26' RT						1							
G23	LP 20 WB FRTG RD STA 454+20 30.45' LT		1		2									
G24	LP 20 WB FRTG RD STA 449+00 26' LT		1		2									
G25	LP 20 WB FRTG RD STA 449+00 40.50' RT						1							
G26	LP 20 WB FRTG RD STA 444+15 45' RT					1								
G29	LP 20 WB FRTG RD STA 443+45 26' LT								1	1				
G30	LP 20 WB FRTG RD STA 443+45 25' RT								1					
G31	LP 20 EB FRTG RD STA 452+75 40.50' LT					1								
G32	LP 20 EB FRTG RD STA 452+75 14' RT		1		2									
G33	LP 20 EB FRTG RD STA 448+00 14' RT		1		1									
G34	LP 20 EB FRTG RD STA 448+00 40.50' LT					1								
G115	GRAND CENTRAL RD STA 13+58 40.50' LT	1												
G116	GRAND CENTRAL RD STA 13+58 35' RT			1										
G117	GRAND CENTRAL RD STA 13+58 40.50' RT	1												
G119	GRAND CENTRAL RD STA 12+58 33' RT			1										
G35	LP 20 EB FRTG RD STA 443+61 25' LT								1					
G38	GRAND CENTRAL RD STA 11+35 31' LT		1											
G39	GRAND CENTRAL RD STA 11+35 31' RT		1											
G40	LP 20 EB FRTG RD STA 443+61 14' RT								1					
G49	LP 20 WB FRTG RD STA 435+83 14' LT		1		1									
G50	LP 20 WB FRTG RD STA 435+83 33.50' RT					1								
G56	LP 20 EB FRTG RD STA 444+25 40' RT	1												
G87	LP 20 WB FRTG RD STA 444+15 28.50' LT			1										
G88	LP 20 EB FRTG RD STA 444+25 16.50' RT			1										
G89	LP 20 EB FRTG RD STA 445+40 40' RT	1												
G91	LP 20 EB FRTG RD STA 427+70 22' RT		1		1									
G98	LP 20 WB FRTG RD STA 445+32 35' LT	1												
G99	LP 20 EB FRTG RD STA 444+25 40.50' LT					1								
G120	LP 20 WB FRTG RD STA 449+00 35' LT											1		
F6	LP 20 WB FRTG RD STA 409+94 50.20' RT										1			
F8	LP 20 EB FRTG RD STA 407+05 35' LT										1			
F5	LP 20 WB FRTG RD STA 413+60 31.80' RT										1			
F16	LP 20 WB FRTG RD STA 414+76.50 28.38' RT										1			
F18	LP 20 WB FRTG RD STA 415+96.50 61.75' RT										1			
F20	LP 20 WB FRTG RD STA 417+40 61.02' RT										1			
M1	McPHERSON RD STA 4+40 41' LT		1		1									
M2	McPHERSON RD STA 6+08 41' LT		1		1									
M3	LP 20 EB FRTG RD STA 497+38 27' RT			1										
M4	LP 20 EB FRTG RD STA 498+28 27' RT			1										
M5	LP 20 EB FRTG RD STA 500+67 26' RT		1		1									
M6	McPHERSON RD STA 6+15 6' RT		1		1									
M7	LP 20 EB FRTG RD STA 491+00 22' RT		1		1									
M8	LP 20 EB FRTG RD STA 496+30 26' RT		1		1									
M9	McPHERSON RD STA 18+17 32.50' RT		1		2									
M10	McPHERSON RD STA 13+92 41' RT		1		2									
M11	LP 20 WB FRTG RD STA 498+27 39' LT			1										
M12	LP 20 EB FRTG RD STA 498+25 28' LT		1											
M13	LP 20 WB FRTG RD STA 497+82 45' LT		1		1									
M14	McPHERSON RD STA 10+00 56' LT		1		1									
M15	LP 20 EB FRTG RD STA 497+43 28' LT		1											
M16	LP 20 EB FRTG RD STA 497+82 48' LT		1											
	SUBTOTAL (CSJ 0086-14-023)	7	25	8	27	7	4	4	4	1	6	1	0	1

STATE OF TEXAS
RUDY L. GOMEZ
58664
REGISTERED PROFESSIONAL ENGINEER

The seal appearing on this document was authorized by Rudy L. Gomez P.E. 58664, on January 28, 2000.

DATE	BY	REV	REVISION
06/03/99	RG	1	TABLE
06/29/99	RG	2	G118,G115,G116,G117 & G119

© 1999 Texas Department of Transportation

Brown & Root
HOUSTON, TEXAS

IH 35/LOOP 20

SUMMARY OF INLETS AND MANHOLES

SHEET 1 OF 3

FED RD DIV NO	STATE PROJECT NO	SHEET NO
6	C86-14-23	58

STATE	STATE DIST NO	COUNTY
TEXAS	22	WEBB

CONT	SECT	JOB	HIGHWAY NO
0086	14	023	LOOP 20

REF FILE(S): J01LOX01.BDR LV ON - 16,45,47,57,60-62

09-30-99 BAR_HO_ES05 \HCIVIL\CF0039\PHASE2 D13QSX04.DGN-05

SUMMARY OF INLETS & MANHOLES (JUNCTION BOX)

DESIGN	LOCATION	465-0501 INLET (COMPL) (TY A) EA	465-0503 INLET (COMPL) (TY C) EA	465-0510 MANH (COMP) (TY A) EA	465-0514 INLET EXT (TY C) EA	465-0517 INLET (COMPL) (TY AD) EA	465-0518 INLET (COMPL) TY AAD EA	465-0559 MANH (COMP) (TY M) (MOD) EA	465-0551 INLET (COMPL) (TY C1) EA	465- INLET EXT (TY C1) EA	465-3512 INLET (COMPL) TY AZR EA	465-0987 INLET (COMPL) TY ADR EA	465-0545 INLET (COMPL) TY H(MOD) EA	479-0502 ADJUST INLETS (COMPL) EA
	IH 35 (CSJ 0018-06-131)													
R1	"RR MILE POST 404.93 95' EAST"												1	
G1	"RR MILE POST 404.93 40' WEST"						1	1						
G10	"LP 20 EB FRTG RD STA 436+04 45.50' LT"						1	1						
G100	"LP 20 WB FRTG RD STA 441+54 45' LT"	1												
G102	"LP 20 EB FRTG RD STA 441+25 40' LT"			1										
G103	"LP 20 WB FRTG RD STA 441+25 40' RT"			1										
G108	"IH 35 NB FRTG RD STA 125+00 45' LT"					1								
G109	"IH 35 NB FRTG RD STA 125+00 14' RT"		1		2									
G110	"IH 35 SB FRTG RD STA 135+75 26' LT"		1		1									
G112	"IH 35 NB FRTG RD STA 138+90 71' LT"											1		
G2	"RR MILE POST 404.93 98' WEST"							1						
G20	"IH 35 SB FRTG RD STA 131+50 46' RT"			1										
G27	"LP 20 WB FRTG RD STA 441+62 70' RT"	1												
G28	"LP 20 WB FRTG RD STA 441+00 40' RT"		1											
G3	"IH 35 NB FRTG RD STA 133+40 36' RT"							1						
G36	"LP 20 EB FRTG RD STA 441+80 50' LT"	1												
G37	"LP 20 EB FRTG RD STA 441+00 40' LT"		1											
G4	"IH 35 NB FRTG RD STA 132+20 55' LT"		1					1						
G40	"LP 20 EB FRTG RD STA 443+61 14' RT"								1					
G41	"IH 35 NB FRTG RD STA 127+60 26' RT"		1		1									
G42	"IH 35 NB FRTG RD STA 127+60 47' LT"					1								
G43	"IH 35 NB FRTG RD STA 129+00 58' LT"		1											
G44	CL IH 35 STA 134+ 50 1													
G45	"IH 35 SB FRTG RD STA 137+85 33' RT"					1								
G46	"IH 35 SB FRTG RD STA 132+20 47' RT"		1											
G47	"IH 35 SB FRTG RD STA 125+45 17' LT"			1										
G48	"IH 35 SB FRTG RD STA 133+51 26' LT"		1		1									
G5	"IH 35 NB FRTG RD STA 131+40 55' LT"							1						
G51	"LP 20 WB FRTG RD STA 437+30 33.50' RT"		1											
G52	"IH 35 SB FRTG RD STA 127+31 14' LT"		1		1									
G53	"IH 35 SB FRTG RD STA 127+31 23' RT"					1								
G54	"IH 35 SB FRTG RD STA 129+00 35' RT"		1											
G55	"LP 20 EB FRTG RD STA 441+80 40' RT"	1												
G57	"LP 20 EB FRTG RD STA 436+04 26' RT"		1		2									
G58	"IH 35 SB FRTG RD STA 125+45 35' RT"					1								
G6	"IH 35 NB FRTG RD STA 129+96 55' LT"							1						
G60	CL IH 35 STA 138+50 1													
G61	"CL IH 35 STA 128+34 53.32' RT"											1		
G62	"IH 35 SB FRTG RD STA 133+50 50' RT"											1		
G63	"IH 35 NB FRTG RD STA 133+50 38' LT"											1		
G64	"IH 35 SB FRTG RD STA 124+00 32' LT"		1		1									
G65	"IH 35 SB FRTG RD STA 122+85 52' LT"			1										
G66	"IH 35 SB FRTG RD STA 122+70 10' RT"	1												
G67	"IH 35 SB FRTG RD STA 133+51 35' LT"					1								
G68	"IH 35 NB FRTG RD STA 133+51 24' LT"					1								
G69	"IH 35 NB FRTG RD STA 133+51 14' RT"		1		1									
G7	"IH 35 NB FRTG RD STA 129+55 83' LT"							1						
G70	"IH 35 SB FRTG RD STA 137+85 14' LT"		1		1									
G71	"IH 35 NB FRTG RD STA 138+90 55' LT"					1								
G72	"IH 35 NB FRTG RD STA 138+90 19' LT"		1											
G73	"IH 35 SB FRTG RD STA 142+00 14' LT"		1		1									
G74	"IH 35 SB FRTG RD STA 142+00 33' RT"					1								
G75	"IH 35 NB FRTG RD STA 140+00 21' LT"					1								
G76	"IH 35 NB FRTG RD STA 138+90 14' RT"		1		2									
G77	"IH 35 SB FRTG RD STA 150+50 19' RT"		1											
G78	"IH 35 NB FRTG RD STA 145+00 28' LT"					1								
G79	"IH 35 NB FRTG RD STA 145+00 14' RT"		1		1									
G8	"IH 35 SB FRTG RD STA 129+55 57' RT"							1						
G80	"IH 35 SB FRTG RD STA 150+50 14' LT"		1		1									
G81	"IH 35 SB FRTG RD STA 150+50 65' RT"					1								
G82	"CL IH 35 STA 142+35 85' RT"	1												
G83	"IH 35 NB FRTG RD STA 142+35 16'RT"			1										
G84	"IH 35 SB FRTG RD STA 146+50 14' LT"		1		1									
G85	"IH 35 SB FRTG RD STA 146+50 33' RT"	1												
G86	"IH 35 NB FRTG RD STA 140+00 16' RT"			1										
G9	"LP 20 EB FRTG RD STA 437+30 45.50' LT"		1					1						

STATE OF TEXAS
RUDY L. GOMEZ
58664
REGISTERED PROFESSIONAL ENGINEER

The seal appearing on this document was authorized by Rudy L. Gomez P.E. 58664, on April 2, 1999.

DATE	BY	REV	REVISION

© 1999 Texas Department of Transportation

Brown & Root
HOUSTON, TEXAS

IH 35/LOOP 20

SUMMARY OF INLETS AND MANHOLES

SHEET 2 OF 3

FED RD DIV NO	STATE PROJECT NO	SHEET NO
6	NH-99(462)	59

STATE	STATE DIST NO	COUNTY
TEXAS	22	WEBB

CONT	SECT	JOB	HIGHWAY NO
0018	06	131	IH 35

D13QSX05.DGN-03 04-03-99 BAR_HO_ES05 \HCIVIL\CF0039\PHASE2

See Revision

SUMMARY OF INLETS & MANHOLES (JUNCTION BOX)

DESIGN	LOCATION	465-0501 INLET (COMPL) (TY A) EA	465-0503 INLET (COMPL) (TY C) EA	465-0510 MANH (COMP) (TY A) EA	465-0514 INLET EXT (TY C) EA	465-0517 INLET (COMPL) (TY AD) EA	465-0518 INLET (COMPL) TY AAD EA	465-0559 MANH (COMP) (TY M) (MOD) EA	465-0551 INLET (COMPL) (TY C1) EA	465- INLET EXT (TY C1) EA	465-3512 INLET (COMPL) TY AZR EA	465-0987 INLET (COMPL) TY ADR EA	465-0545 INLET (COMPL) TY H(MOD) EA	479-0502 ADJUST INLETS (COMPL) EA
	IH 35 (CSJ 0018-06-131)													
R1	"RR MILE POST 404.93 95' EAST"												1	
G1	"RR MILE POST 404.93 40' WEST"						1	1						
G10	"LP 20 EB FRTG RD STA 436+04 45.50' LT"						1	1						
G100	"LP 20 WB FRTG RD STA 441+54 45' LT"	1												
G102	"LP 20 EB FRTG RD STA 441+25 40' LT"			1										
G103	"LP 20 WB FRTG RD STA 441+25 40' RT"			1										
G108	"IH 35 NB FRTG RD STA 125+00 45' LT"					1								
G109	"IH 35 NB FRTG RD STA 125+00 14' RT"		1		2									
G110	"IH 35 SB FRTG RD STA 135+75 26' LT"		1		1									
G112	"IH 35 NB FRTG RD STA 138+90 71' LT"											1		
G2	"RR MILE POST 404.93 98' WEST"							1						
G20	"IH 35 SB FRTG RD STA 131+50 46' RT"			1										
G27	"LP 20 WB FRTG RD STA 441+62 70' RT"	1												
G28	"LP 20 WB FRTG RD STA 441+00 40' RT"		1											
G3	"IH 35 NB FRTG RD STA 133+40 36' RT"							1						
G36	"LP 20 EB FRTG RD STA 441+80 50' LT"	1												
G37	"LP 20 EB FRTG RD STA 441+00 40' LT"		1											
G4	"IH 35 NB FRTG RD STA 132+20 55' LT"		1					1						
G40	"LP 20 EB FRTG RD STA 443+61 14' RT"								1					
G41	"IH 35 NB FRTG RD STA 127+60 26' RT"		1		1									
G42	"IH 35 NB FRTG RD STA 127+60 47' LT"					1								
G43	"IH 35 NB FRTG RD STA 129+00 58' LT"		1											
G44	CL IH 35 STA 134+ 50 1													
G45	"IH 35 SB FRTG RD STA 137+85 33' RT"					1								
G46	"IH 35 SB FRTG RD STA 132+20 47' RT"		1											
G47	"IH 35 SB FRTG RD STA 125+45 17' LT"			1										
G48	"IH 35 SB FRTG RD STA 133+51 26' LT"		1		1									
G5	"IH 35 NB FRTG RD STA 131+40 55' LT"							1						
G51	"LP 20 WB FRTG RD STA 437+30 33.50' RT"		1											
G52	"IH 35 SB FRTG RD STA 127+31 14' LT"		1		1									
G53	"IH 35 SB FRTG RD STA 127+31 23' RT"					1								
G54	"IH 35 SB FRTG RD STA 129+00 35' RT"		1											
G55	"LP 20 EB FRTG RD STA 441+80 40' RT"	1												
G57	"LP 20 EB FRTG RD STA 436+04 26' RT"		1		2									
G58	"IH 35 SB FRTG RD STA 125+45 35' RT"					1								
G6	"IH 35 NB FRTG RD STA 129+96 55' LT"							1						
G60	CL IH 35 STA 138+50 1													
G61	"CL IH 35 STA 128+34 53.32' RT"											1		
G62	"IH 35 SB FRTG RD STA 133+50 50' RT"											1		
G63	"IH 35 NB FRTG RD STA 133+50 38' LT"											1		
G64	"IH 35 SB FRTG RD STA 124+00 32' LT"		1		1									
G65	"IH 35 SB FRTG RD STA 122+85 52' LT"			1										
G66	"IH 35 SB FRTG RD STA 122+70 10' RT"	1												
G67	"IH 35 SB FRTG RD STA 133+51 35' LT"					1								
G68	"IH 35 NB FRTG RD STA 133+51 24' LT"					1								
G69	"IH 35 NB FRTG RD STA 133+51 14' RT"		1		1									
G7	"IH 35 NB FRTG RD STA 129+55 83' LT"							1						
G70	"IH 35 SB FRTG RD STA 137+85 14' LT"		1		1									
G71	"IH 35 NB FRTG RD STA 138+90 55' LT"					1								
G72	"IH 35 NB FRTG RD STA 138+90 19' LT"		1											
G73	"IH 35 SB FRTG RD STA 142+00 14' LT"		1		1									
G74	"IH 35 SB FRTG RD STA 142+00 33' RT"					1								
G75	"IH 35 NB FRTG RD STA 140+00 21' LT"					1								
G76	"IH 35 NB FRTG RD STA 138+90 14' RT"		1		2									
G77	"IH 35 SB FRTG RD STA 150+50 19' RT"		1											
G78	"IH 35 NB FRTG RD STA 145+00 28' LT"					1								
G79	"IH 35 NB FRTG RD STA 145+00 14' RT"		1		1									
G8	"IH 35 SB FRTG RD STA 129+55 57' RT"							1						
G80	"IH 35 SB FRTG RD STA 150+50 14' LT"		1		1									
G81	"IH 35 SB FRTG RD STA 150+50 65' RT"					1								
G82	"CL IH 35 STA 142+35 85' RT"	1												
G83	"IH 35 NB FRTG RD STA 142+35 16'RT"			1										
G84	"IH 35 SB FRTG RD STA 146+50 14' LT"		1		1									
G85	"IH 35 SB FRTG RD STA 146+50 33' RT"	1												
G86	"IH 35 NB FRTG RD STA 140+00 16' RT"			1										
G9	"LP 20 EB FRTG RD STA 437+30 45.50' LT"		1					1						
G117	"IH 35 SB FRTG RD STA 135+75 35' LT"			1										

STATE OF TEXAS
RUDY L. GOMEZ
58664
REGISTERED PROFESSIONAL ENGINEER

The seal appearing on this document was authorized by Rudy L. Gomez P.E. 58664, on January 28, 2000.

DATE	BY	REV	REVISION
12/7/99	RG	1	G117 ADDED

© 1999 Texas Department of Transportation

Brown & Root
HOUSTON, TEXAS

IH 35/LOOP 20

SUMMARY OF INLETS AND MANHOLES

SHEET 2 OF 3

FED RD DIV NO	STATE PROJECT NO	SHEET NO
6	NH-99(462)	59

STATE	STATE DIST NO	COUNTY
TEXAS	22	WEBB

CONT	SECT	JOB	HIGHWAY NO
0018	06	131	IH 35

D13GSX05.DGN-04 12-01-99 BAR_HO_ES05 \HCIVIL\CF0039\PHASE2

SUMMARY OF INLETS & MANHOLES (JUNCTION BOX)

DESIGN	LOCATION	465-0501 INLET (COMPL) (TY A) EA	465-0503 INLET (COMPL) (TY C) EA	465-0510 MANH (COMP) (TY A) EA	465-0514 INLET EXT (TY C) EA	465-0517 INLET (COMPL) (TY AD) EA	465-0518 INLET (COMPL) TY AAD EA	465-0559 MANH (COMP) (TY M) (MOD) EA	465-0551 INLET (COMPL) (TY C1) EA	465- INLET EXT (TY C1) EA	465-3512 INLET (COMPL) TY AZR EA	465-0987 INLET (COMPL) TY ADR EA	465-0545 INLET (COMPL) TY H(MOD) EA	479-502 ADJUST INLETS (COMPL) EA
K6	"IH 35 NB FRTG RD STA 121+50 63' LT"	1												
K9	"IH 35 NB FRTG RD STA 121+50 22' LT"		1											
N1	"IH 35 SB FRTG RD STA 187+00 36' RT"					1								
N2	"IH 35 SB FRTG RD STA 188+98 36' RT"						1							
N4	"IH 35 SB FRTG RD STA 213+55 36' RT"					1								
N5	"IH 35 SB FRTG RD STA 227+50 36' RT"	1												
N6	"IH 35 SB FRTG RD STA 228+36 36' RT"						1							
N8	"IH 35 SB FRTG RD STA 212+07 36' RT"			1										
N9	"IH 35 SB FRTG RD STA 227+85 36' RT"			1										
N10	"IH 35 SB FRTG RD STA 228+03 36' RT"			1										
L1	"IH 35 NB FRTG RD STA 153+95 28' LT"						1							
L2	"IH 35 SB FRTG RD STA 156+33 22' LT"	1												
L17	"IH 35 SB FRTG RD STA 156+33 33' RT"					1								
L3	"IH 35 SB FRTG RD STA 160+43 60' RT"	1												
L9	CL IH 35 STA 160+40 1													
L10	CL IH 35 STA 163+80 1													
L11	"IH 35 NB FRTG RD STA 163+09 24' LT"						1							
L14	"IH 35 NB FRTG RD STA 163+09 14' RT"		1		1									
L4	"IH 35 NB FRTG RD STA 152+80 76' LT"						1							
L5	"IH 35 NB FRTG RD STA 152+80 20' LT"	1												
L13	"IH 35 NB FRTG RD STA 152+80 14' RT"		1		1									
L18	"IH 35 NB FRTG RD STA 160+47.30 14' RT"		1		1									
L19	"IH 35 NB FRTG RD STA 160+47.30 20.85' LT"	1												
L20	"IH 35 NB FRTG RD STA 157+50 62' LT"	1												
L21	"IH 35 NB FRTG RD STA 157+50 14' RT"		1		1									
L22	"IH 35 NB FRTG RD STA 153+95 16' RT"			1										
L6	"IH 35 SB FRTG RD STA 165+00 27' RT"					1								
L7	"IH 35 SB FRTG RD STA 170+00 35' RT"						1							
	"IH 35 SB FRTG RD STA 212+02 36' RT"							1						
	"IH 35 SB FRTG RD STA 227+90 38' RT"							1						
	SUBTOTAL (CSJ 0018-06-131)	18	29	11	21	16	8	12	1	0	0	4	1	0
	TOTAL	22	54	17	48	23	12	16	5	1	6	4	1	1

NOTE: CURB INLET OFFSETS ARE REFERENCED TO FACE OF CURB.

SEE REVISION
REV. 6-25-99

STATE OF TEXAS
RUDY L. GOMEZ
P.E. 58664
REGISTERED PROFESSIONAL ENGINEER

The seal appearing on this document was authorized by Rudy L. Gomez P.E. 58664, on June 3, 1999.

DATE	BY	REV	REVISION
06/03/99	RG	1	TABLE

© 1999 Texas Department of Transportation

Brown & Root
HOUSTON, TEXAS

IH 35/LOOP 20

SUMMARY OF INLETS AND MANHOLES

SHEET 3 OF 3

FED RD DIV NO	STATE PROJECT NO		SHEET NO
6	NH-99(462)		60
STATE	STATE DIST NO	COUNTY	
TEXAS	22	WEBB	
CONT	SECT	JOB	HIGHWAY NO
0018	06	131	IH 35

D13QSX06.DGN-04 06-02-99 BAR_HO_ES05 \HCIVIL\CF0039\PHASE2

SUMMARY OF INLETS & MANHOLES (JUNCTION BOX)

DESIGN	LOCATION	465-0501 INLET (COMPL) (TY A) EA	465-0503 INLET (COMPL) (TY C) EA	465-0510 MANH (COMP) (TY A) EA	465-0514 INLET EXT (TY C) EA	465-0517 INLET (COMPL) (TY AD) EA	465-0518 INLET (COMPL) TY AAD EA	465-0559 MANH (COMP) (TY M) (MOD) EA	465-0551 INLET (COMPL) (TY C1) EA	465- INLET EXT (TY C1) EA	465-3512 INLET (COMPL) TY AZR EA	465-0987 INLET (COMPL) TY ADR EA	465-0545 INLET (COMPL) TY H(MOD) EA	479-502 ADJUST INLETS (COMPL) EA
K6	IH 35 NB FRTG RD STA 121+50 63' LT	1												
K9	IH 35 NB FRTG RD STA 121+50 22' LT		1											
N1	IH 35 SB FRTG RD STA 187+00 36' RT					1								
N2	IH 35 SB FRTG RD STA 188+98 36' RT						1							
N4	IH 35 SB FRTG RD STA 213+55 36' RT					1								
N5	IH 35 SB FRTG RD STA 227+50 36' RT	1												
N6	IH 35 SB FRTG RD STA 228+36 36' RT						1							
N8	IH 35 SB FRTG RD STA 212+07 36' RT			1										
N9	IH 35 SB FRTG RD STA 227+85 36' RT			1										
N10	IH 35 SB FRTG RD STA 228+03 36' RT			1										
L1	IH 35 NB FRTG RD STA 153+95 28' LT						1							
L2	IH 35 SB FRTG RD STA 156+33 22' LT	1												
L17	IH 35 SB FRTG RD STA 156+33 33' RT					1								
L3	IH 35 SB FRTG RD STA 160+43 60' RT	1												
L9	CL IH 35 STA 160+40 1													
L10	CL IH 35 STA 163+80 1													
L11	IH 35 NB FRTG RD STA 163+09 24' LT						1							
L14	IH 35 NB FRTG RD STA 163+09 14' RT		1		1									
L4	IH 35 NB FRTG RD STA 152+80 76' LT						1							
L5	IH 35 NB FRTG RD STA 152+80 20' LT	1												
L13	IH 35 NB FRTG RD STA 152+80 14' RT		1		1									
L18	IH 35 NB FRTG RD STA 160+47.30 14' RT		1		1									
L19	IH 35 NB FRTG RD STA 160+47.30 20.85' LT	1												
L20	IH 35 NB FRTG RD STA 157+50 62' LT	1												
L21	IH 35 NB FRTG RD STA 157+50 14' RT		1		1									
L22	IH 35 NB FRTG RD STA 153+95 16' RT			1										
L6	IH 35 SB FRTG RD STA 165+00 27' RT					1								
L7	IH 35 SB FRTG RD STA 170+00 35' RT						1							
	IH 35 SB FRTG RD STA 212+02 36' RT							1						
	IH 35 SB FRTG RD STA 227+90 38' RT							1						
	SUBTOTAL (CSJ 0018-06-131)	18	29	11	21	16	8	12	1	0	0	4	1	0
	TOTAL	25	54	19	48	23	12	16	5	1	6	5	1	1

NOTE: CURB INLET OFFSETS ARE REFERENCED TO FACE OF CURB.

STATE OF TEXAS
RUDY L. GOMEZ
58664
REGISTERED PROFESSIONAL ENGINEER

The seal appearing on this document was authorized by Rudy L. Gomez P.E. 58664, on September 30, 1999.

DATE	BY	REV	REVISION
06/03/99	RG	1	TABLE
09/29/99	RG	2	TOTALS

© 1999 Texas Department of Transportation

Brown & Root
HOUSTON, TEXAS

IH 35/LOOP 20

SUMMARY OF INLETS AND MANHOLES

SHEET 3 OF 3

FED RD DIV NO	STATE PROJECT NO	SHEET NO
6	NH-99(462)	60

STATE	STATE DIST NO	COUNTY
TEXAS	22	WEBB

CONT	SECT	JOB	HIGHWAY NO
0018	06	131	IH 35

SEE REVISION

REF FILE(S): J01LOX01.BDR LV ON - 16,45,47,57,60-62

D13GSX06.DGN-06 09-30-99 BAR_HO_ES05 \HCIVIL\CF0039\PHASE2

SUMMARY OF INLETS & MANHOLES (JUNCTION BOX)

DESIGN	LOCATION	465-0501 INLET (COMPL) (TY A) EA	465-0503 INLET (COMPL) (TY C) EA	465-0510 MANH (COMP) (TY A) EA	465-0514 INLET EXT (TY C) EA	465-0517 INLET (COMPL) (TY AD) EA	465-0518 INLET (COMPL) TY AAD EA	465-0559 MANH (COMP) (TY M) (MOD) EA	465-0551 INLET (COMPL) (TY C1) EA	465- INLET EXT (TY C1) EA	465-3512 INLET (COMPL) TY AZR EA	465-0987 INLET (COMPL) TY ADR EA	465-0545 INLET (COMPL) TY H(MOD) EA	479-502 ADJUST INLETS (COMPL) EA
K6	IH 35 NB FRTG RD STA 121+50 80' LT	1												
K9	IH 35 NB FRTG RD STA 121+50 22' LT		1											
K10	IH 35 NB FRTG RD STA 121+50 14' RT		1											
N1	IH 35 SB FRTG RD STA 187+00 36' RT					1								
N2	IH 35 SB FRTG RD STA 188+98 36' RT						1							
N4	IH 35 SB FRTG RD STA 213+55 36' RT					1								
N5	IH 35 SB FRTG RD STA 227+50 36' RT	1												
N6	IH 35 SB FRTG RD STA 228+36 36' RT						1							
N8	IH 35 SB FRTG RD STA 212+07 36' RT			1										
N9	IH 35 SB FRTG RD STA 227+85 36' RT			1										
N10	IH 35 SB FRTG RD STA 228+03 36' RT			1										
L1	IH 35 NB FRTG RD STA 153+95 28' LT						1							
L2	IH 35 SB FRTG RD STA 156+33 22' LT	1												
L17	IH 35 SB FRTG RD STA 156+33 33' RT					1								
L3	IH 35 SB FRTG RD STA 160+43 60' RT	1												
L9	CL IH 35 STA 160+40 1													
L10	CL IH 35 STA 163+80 1													
L11	IH 35 NB FRTG RD STA 163+09 24' LT						1							
L14	IH 35 NB FRTG RD STA 163+09 14' RT		1		1									
L4	IH 35 NB FRTG RD STA 152+80 76' LT						1							
L5	IH 35 NB FRTG RD STA 152+80 20' LT	1												
L13	IH 35 NB FRTG RD STA 152+80 14' RT		1		1									
L18	IH 35 NB FRTG RD STA 160+47.30 14' RT		1		1									
L19	IH 35 NB FRTG RD STA 160+47.30 20.85' LT	1												
L20	IH 35 NB FRTG RD STA 157+50 62' LT	1												
L21	IH 35 NB FRTG RD STA 157+50 14' RT		1		1									
L22	IH 35 NB FRTG RD STA 153+95 16' RT			1										
L6	IH 35 SB FRTG RD STA 165+00 27' RT					1								
L7	IH 35 SB FRTG RD STA 170+00 35' RT						1							
	IH 35 SB FRTG RD STA 212+02 36' RT							1						
	IH 35 SB FRTG RD STA 227+90 38' RT							1						
	SUBTOTAL (CSJ 0018-06-131)	18	30	12	21	16	8	12	1	0	0	4	1	0
	TOTAL	25	55	20	48	23	12	16	5	1	6	5	1	1

NOTE: CURB INLET OFFSETS ARE REFERENCED TO FACE OF CURB.

STATE OF TEXAS
RUDY L. GOMEZ
58664
REGISTERED PROFESSIONAL ENGINEER

The seal appearing on this document was authorized by Rudy L. Gomez P.E. 58664, on January 28, 2000.

DATE	BY	REV	REVISION
06/03/99	RG	1	TABLE
09/29/99	RG	2	TOTALS
11/22/99	RG	3	K10 ADDED

© 1999 Texas Department of Transportation

Brown & Root
HOUSTON, TEXAS

IH 35/LOOP 20

SUMMARY OF INLETS AND MANHOLES

SHEET 3 OF 3

FED RD DIV NO	STATE PROJECT NO	SHEET NO
6	NH-99(462)	60

STATE	STATE DIST NO	COUNTY
TEXAS	22	WEBB

CONT	SECT	JOB	HIGHWAY NO
0018	06	131	IH 35

REF FILE(S): J01LOX01.BDR LV ON • 16,45,47,57,60-62

D13QSX06.DGN-07 12-02-99 BAR_HO_ES05 \HCIVIL\CF0039\PHASE2

SUMMARY OF SW3P QUANTITIES

ITEM NO. - DESCRIPTION LOCATION: SHEET NO.	BEGINNING STATION	ENDING STATION	0164-0507 STND SEED FOR COOL SEASON TEMP ERSN CNT	0164-0508 STND SEED FOR WARM SEASON TEMP ERSN CNT	0166-0509 FERTILIZER (13-13-13)	0168-0502 VEG WATERING (TEMP ERSN CNT)	5005-0504 ROCK FILTER DAMS (TY2)	5005-0505 ROCK FILTER DAMS (RMV & REPL) (TY2)	5005-0506 ROCK FILTER DAMS (REMOVE) (TY2)	5005-0507 ROCK FILTER DAMS (TY3)	5005-0508 ROCK FILTER DAMS (RMV & REPL) (TY3)	5005-0509 ROCK FILTER DAMS (REMOVE) (TY3)	5007-0501 BALED HAY FOR EROSN & SEDMT CONT	5007-0502 BL HAY FOR ERSN & SED CONT (RMV & REPL)	5007-0503 BALED HAY FOR EROSN & SED CONT (REMOVE)
			AC	AC	TON	MG	LF	LF	LF	LF	LF	LF	EA	EA	EA
LOOP 20 (CSJ 0086-14-023)															
2	394+00	429+00	5.40	5.40	1.31	586.44	0	0	0	0	0	0	264	264	264
3	429+00 442+00	436+00 469+00	35.40	35.40	8.57	3844.44	40	40	40	0	0	0	582	582	582
4	469+00	509+00	15.20	15.20	3.68	1650.72	240	240	240	0	0	0	564	564	564
5	509+00	514+00	1.10	1.10	0.27	119.46	0	0	0	0	0	0	32	32	32
SUB TOTAL (LOOP 20 (CSJ 0086-14-023))			57.1	57.1	13.82	6201.06	280	280	280	0	0	0	1442	1442	1442
I - 35 (CSJ 0018-06-131)															
6	90+00	126+00	9.30	9.30	2.25	1009.98	170	170	170	0	0	0	560	560	560
3	126+00	137+00	7.30	7.30	1.77	792.78	0	0	0	0	0	0	20	20	20
7	137+00	177+00	12.80	12.80	3.10	1390.08	0	0	0	140	140	140	1408	1408	1408
8	177+00	216+00	4.80	4.80	1.16	521.28	70	70	70	0	0	0	304	304	304
9	216+00	246+00	3.30	3.30	0.80	358.38	0	0	0	0	0	0	292	292	292
SUB TOTAL (I - 35 (CSJ 0018-06-131))			37.50	37.50	9.08	4072.50	240.00	240.00	240.00	140.00	140.00	140.00	2584.00	2584.00	2584.00
UNIROYAL RD (CSJ 0018-05-057)															
10	10+12.52	14+70.90	3.80	3.80	0.92	771.06	0	0	0	0	0	0	10	10	10
TOTALS			98.40	98.40	23.81	11044.62	520.00	520.00	520.00	140.00	140.00	140.00	4036.00	4036.00	4036.00

SUMMARY OF SW3P QUANTITIES

ITEM NO. - DESCRIPTION LOCATION: SHEET NO.	BEGINNING STATION	ENDING STATION	5010-0501 CONSTRUCT EXIT (TY 1)	5010-0502 CONSTRUCT EXIT (RMV & REPL) (TY 1)	5010-0503 CONSTRUCT EXIT (REMOV) (TY 1)	5012-0501 BKHOE WORK (EROSN CONT) (CL 1)	5084-0501 SANDBAGS FOR EROSION CONTROL	5249-0501 TEMP SEDMT CONT FENCE	5249-0502 TEMP SEDMT CONT FENCE (RMV & REPL)	5249-0503 TEMP SEDMT CONT FENCE (REMOV)	5249-0504 TEMP SEDMT CONT FEN (INLET PROTECT)	5249-0505 TEMP SD CONT FEN (RMV & RPL) (INLET PRCT)	5249-0506 TEMP SEDMT CONT FENCE (REMOV) (INLET PRCT)
			SY	SY	SY	H	EA	LF	LF	LF	LF	LF	LF
LOOP 20 (CSJ 0086-14-023)													
2	394+00	429+00	136	136	136	5	0	4010	8360	8360	92	826	826
3	429+00	469+00	136	136	136	55	96	13440	13440	13440	830	922	922
4	469+00	509+00	272	272	272	15	0	6060	6060	6060	552	552	552
5	509+00	514+00	0	0	0	0	0	570	570	570	0	0	0
SUB TOTAL (LOOP 20 (CSJ 0086-14-023))			544	544	544	75	96	24080	28430	28430	1796	2300	2300
I - 35 (CSJ 0018-06-131)													
6	90+00	126+00	0	0	0	25	0	9735	9735	9735	282	282	282
3	126+00	137+00	0	0	0	0	0	300	300	300	984	984	984
7	137+00	177+00	272	272	272	20	0	12820	12820	12820	1282	1282	1282
8	177+00	216+00	136	136	136	20	0	3720	3720	3720	108	108	108
9	216+00	246+00	136	136	136	10	0	5300	5300	5300	0	0	0
SUB TOTAL (I - 35 (CSJ 0018-06-131))			544	544	544	75	0	31875	31875	31875	2656	2656	2656
UNIROYAL RD (CSJ 0018-05-057)													
10	10+12.52	14+70.90	136	136	136	0	0	2479	2479	2479	92	92	92
TOTALS			1224	1224	1224	150	96	58434	62784	62784	4222	5048	5048

STATE OF TEXAS
RUDY L. GOMEZ
58664
REGISTERED PROFESSIONAL ENGINEER

The seal appearing on this document was authorized by Rudy L. Gomez P.E. 58664, on April 2, 1999.

Rudy L. Gomez

DATE	BY	REV	REVISION

© 1999 Texas Department of Transportation

Brown & Root
HOUSTON, TEXAS

IH 35/LOOP 20

SUMMARY OF SW3P QUANTITIES

SHEET 1 OF 1

FED RD DIV NO	STATE PROJECT NO	SHEET NO
6	C86-14-23	62

STATE	STATE DIST NO	COUNTY
TEXAS	22	WEBB

CONT	SECT	JOB	HIGHWAY NO
0086	14	023	LOOP 20

D14QSX01.DGN-04 04-05-99 BAR_HO_ES05 \HCIVIL\CF0039\PHASE2

SEE REVISION

SUMMARY OF SW3P QUANTITIES

ITEM NO. - DESCRIPTION			0164-0507	0164-0508	0166-0509	0168-0502	5005-0504	5005-0505	5005-0506	5005-0507	5005-0508	5005-0509	5007-0501	5007-0502	5007-0503
LOCATION			STND SEED FOR COOL SEASON TEMP ERSN CNT	STND SEED FOR WARM SEASON TEMP ERSN CNT	FERTILIZER (13-13-13)	VEG WATERING (TEMP ERSN CNT)	ROCK FILTER DAMS (TY2)	ROCK FILTER DAMS (RMV & REPL) (TY2)	ROCK FILTER DAMS (REMOVE) (TY2)	ROCK FILTER DAMS (TY3)	ROCK FILTER DAMS (RMV & REPL) (TY3)	ROCK FILTER DAMS (REMOVE) (TY3)	BALED HAY FOR EROSN & SEDMT CONT	BL HAY FOR ERSN & SED CONT (RMV & REPL)	BALED HAY FOR EROSN & SED CONT (REMOVE)
SHEET NO.	BEGINNING STATION	ENDING STATION													
			AC	AC	TON	MG	LF	LF	LF	LF	LF	LF	EA	EA	EA
LOOP 20 (CSJ 0086-14-023)															
2	394+00	429+00	5.40	5.40	1.31	586.44	0	0	0	0	0	0	264	264	264
3	429+00 442+00	436+00 469+00	35.40	35.40	8.57	3844.44	40	40	40	0	0	0	582	582	582
4	469+00	509+00	15.20	15.20	3.68	1650.72	240	240	240	0	0	0	564	564	564
5	509+00	514+00	1.10	1.10	0.27	119.46	0	0	0	0	0	0	32	32	32
SUB TOTAL (LOOP 20 (CSJ 0086-14-023))			57.1	57.1	13.82	6201.06	280	280	280	0	0	0	1442	1442	1442
I - 35 (CSJ 0018-06-131)															
6	90+00	126+00	9.30	9.30	2.25	1009.98	170	170	170	0	0	0	560	560	560
3	126+00	137+00	7.30	7.30	1.77	792.78	0	0	0	0	0	0	20	20	20
7	137+00	177+00	12.80	12.80	3.10	1390.08	0	0	0	140	140	140	1408	1408	1408
8	177+00	216+00	4.80	4.80	1.16	521.28	70	70	70	0	0	0	304	304	304
9	216+00	246+00	3.30	3.30	0.80	358.38	0	0	0	0	0	0	292	292	292
SUB TOTAL (I - 35 (CSJ 0018-06-131))			37.50	37.50	9.08	4072.50	240.00	240.00	240.00	140.00	140.00	140.00	2584.00	2584.00	2584.00
UNIROYAL RD (CSJ 0018-05-057)															
10	10+12.52	14+70.90	3.80	3.80	0.92	771.06	0	0	0	0	0	0	10	10	10
TOTALS			98.40	98.40	23.81	11044.62	520.00	520.00	520.00	140.00	140.00	140.00	4036.00	4036.00	4036.00

SUMMARY OF SW3P QUANTITIES

ITEM NO. - DESCRIPTION			5010-0501	5010-0502	5010-0503	5012-0501	5084-0501	5249-0501	5249-0502	5249-0503	5249-0504	5249-0505	5249-0506
LOCATION			CONSTRUCT EXIT (TY 1)	CONSTRUCT EXIT (RMV & REPL) (TY 1)	CONSTRUCT EXIT (REMOV) (TY 1)	BKHOE WORK (EROSN CONT) (CL 1)	SANDBAGS FOR EROSION CONTROL	TEMP SEDMT CONT FENCE	TEMP SEDMT CONT FENCE (RMV & REPL)	TEMP SEDMT CONT FENCE (REMOV)	TEMP SEDMT CONT FEN (INLET PROTECT)	TEMP SD CONT FEN (RMV & RPL) (INLET PRCT)	TEMP SEDMT CONT FENCE (REMOV) (INLET PRCT)
SHEET NO.	BEGINNING STATION	ENDING STATION											
			SY	SY	SY	H	EA	LF	LF	LF	LF	LF	LF
LOOP 20 (CSJ 0086-14-023)													
2	394+00	429+00	136	136	136	5	0	4010	8360	8360	128	862	862
3	429+00	469+00	136	136	136	55	96	13440	13440	13440	938	1030	1030
4	469+00	509+00	272	272	272	15	0	6060	6060	6060	552	552	552
5	509+00	514+00	0	0	0	0	0	570	570	570	0	0	0
SUB TOTAL (LOOP 20 (CSJ 0086-14-023))			544	544	544	75	96	24080	28430	28430	1618	2444	2444
I - 35 (CSJ 0018-06-131)													
6	90+00	126+00	0	0	0	25	0	9735	9735	9735	282	282	282
3	126+00	137+00	0	0	0	0	0	300	300	300	984	984	984
7	137+00	177+00	272	272	272	20	0	12820	12820	12820	1282	1282	1282
8	177+00	216+00	136	136	136	20	0	3720	3720	3720	108	108	108
9	216+00	246+00	136	136	136	10	0	5300	5300	5300	0	0	0
SUB TOTAL (I - 35 (CSJ 0018-06-131))			544	544	544	75	0	31875	31875	31875	2656	2656	2656
UNIROYAL RD (CSJ 0018-05-057)													
10	10+12.52	14+70.90	136	136	136	0	0	2479	2479	2479	92	92	92
TOTALS			1224	1224	1224	150	96	58434	62784	62784	4366	5192	5192

STATE OF TEXAS
RUDY L. GOMEZ
58664
REGISTERED PROFESSIONAL ENGINEER

The seal appearing on this document was authorized by Rudy L. Gomez P.E. 58664, on September 30, 1999.

DATE	BY	REV	REVISION

© 1999 Texas Department of Transportation

Brown & Root
HOUSTON, TEXAS

IH 35/LOOP 20

SUMMARY OF SW3P QUANTITIES

SHEET 1 OF 1

FED RD DIV NO	STATE PROJECT NO		SHEET NO
6	C86-14-23		62
STATE	STATE DIST NO	COUNTY	
TEXAS	22	WEBB	
CONT	SECT	JOB	HIGHWAY NO
0086	14	023	LOOP 20

D14QSX01.DGN-06 09-22-99 BAR_HO_ES05 \HCIVIL\CF0039\PHASE2

SUMMARY OF BRIDGE CLASS CULVERT QUANTITIES

ITEM NO. - DESCRIPTION			400-501	400-504	400-507	462-508	462-524	466-586	466-588
LOCATION									
ROADWAY	STATION	OFFSET	STRUCT EXCAV	STRUCT EXCAV (CULV LARGE)	CEM STABIL BKFL	CONC BOX CULV (5 FT X 4 FT)	CONC BOX CULV (8 FT X 6 FT)	WINGWALL (MCW-P) (H= 4 FT)	WINGWALL (MCW-P) (H= 6 FT)
			CY	CY	CY	LF	LF	EA	EA
IH 35 (CSJ: 0018-06-131)									
SB FRTG RD	160+39.285		13.0	28.3	43.3		81.0		1
SB FRTG RD	187+65.605		20.8	16.7	22.4	77.0		1	
		SUBTOTAL	33.7	45.0	65.7	77.0	81.0	1	1
TOTALS			33.7	45.0	65.7	77.0	81.0	1	1

SUMMARY OF NON-BRIDGE CLASS CULVERT QUANTITIES

ITEM NO. - DESCRIPTION			110-502	400-503	400-507	432-529	462-507	462-514	462-XXX	462-522	464-505	464-519	464-521	464-522
LOCATION														
ROADWAY	STATION	OFFSET	EXCAV (CHAN)	STRUCT EXCAV (CULV SMALL)	CEM STABIL BKFL	RIPRAP (CONC) (CL B) (5 IN)	CONC BOX CULV (5 FT X 3 FT)	CONC BOX CULV (6 FT X 4 FT)	CONC BOX CULV (6 FT X 4 FT) (MOD)	CONC BOX CULV (8 FT X 4 FT)	RC PIPE (CL III) (24 IN)	RC PIPE (CL IV) (18 IN)	RC PIPE (CL IV) (30 IN)	RC PIPE (CL IV) (36 IN)
			(CY)	CY	CY	CY	LF	LF	LF	LF	LF	LF	LF	LF
LOOP 20 (CSJ:0086-14-023)														
WB FRTG RD	470+55.341				11.7	9.3				20.0				
WB FRTG RD	481+42.189			1.9	4.8						18.0			
EB FRTG RD	470+09.000		154.1	62.9	82.3					103.0				
EB FRTG RD	479+61.570		523.1		96.7			204.0						
LOOP 20	505+72.000		163.6		85.3	7.2			180.0					
LOOP 20	503+50.000	26' RT												
		SUBTOTAL	840.8	64.8	280.8	16.5	0.0	204.0	180.0	123.0	18.0	0.0	0.0	0.0
IH 35 (CSJ: 0018-06-131)														
RR MP 404.91-404.93			1461.0											
SB FRTG RD	212+24.000				48.2		80.0							
SB FRTG RD	228+30.000				82.0		198.0							
LOOP 20 DETOUR (RR MP 404.95)														
LOOP 20 DETOUR	4+15.06			172.2	84.5									225.0
WB FRTG RD	442+22.00			186.9	137.5							480.0		
		SUBTOTAL	1461.0	359.1	352.2	0.0	278.0	0.0	0.0	0.0	0.0	480.0	0.0	225.0
TOTAL			2301.8	424.0	633.0	16.5	278.0	204.0	180.0	123.0	18.0	480.0	0.0	225.0

SEE REVISION
REV. 6-25-99

STATE OF TEXAS
RUDY L. GOMEZ
58664
REGISTERED PROFESSIONAL ENGINEER

The seal appearing on this document was authorized by Rudy L. Gomez P.E. 58664, on June 16, 1999.

DATE	BY	REV	REVISION
06/03/99	RG	1	QUANTITIES
06/16/99	RG	2	CHANNEL EXCAV

© 1999 Texas Department of Transportation

Brown & Root
HOUSTON, TEXAS

IH 35/LOOP 20

SUMMARY OF CULVERT QUANTITIES
BRIDGE CLASS CULVERT
& MISC. CULVERT

SHEET 1 OF 2

FED RD DIV NO	STATE PROJECT NO	SHEET NO
6	C86-14-23	63

STATE	STATE DIST NO	COUNTY
TEXAS	22	WEBB

CONT	SECT	JOB	HIGHWAY NO
0086	14	023	LOOP 20

D13OSX01.DGN-05 06-17-99 BAR_HO_ES05 \HCIVIL\CF0039\PHASE2

SUMMARY OF BRIDGE CLASS CULVERT QUANTITIES

ITEM NO. - DESCRIPTION			400-501	400-504	400-507	462-508	462-524	466-586	466-588
LOCATION									
ROADWAY	STATION	OFFSET	STRUCT EXCAV	STRUCT EXCAV (CULV LARGE)	CEM STABIL BKFL	CONC BOX CULV (5 FT X 4 FT)	CONC BOX CULV (8 FT X 6 FT)	WINGWALL (MCW-P) (H= 4 FT)	WINGWALL (MCW-P) (H= 6 FT)
			CY	CY	CY	LF	LF	EA	EA
IH 35 (CSJ: 0018-06-131)									
SB FRTG RD	160+39.285		13.0	28.3	43.3		81.0		1
SB FRTG RD	187+65.605		20.8	16.7	22.4	77.0		1	
		SUBTOTAL	33.7	45.0	65.7	77.0	81.0	1	1
TOTALS			33.7	45.0	65.7	77.0	81.0	1	1

SUMMARY OF NON-BRIDGE CLASS CULVERT QUANTITIES

ITEM NO. - DESCRIPTION			110-502	400-503	400-504	400-507	432-529	462-507	462-514	462-XXX	462-522	464-505	464-519	464-521	464-522
LOCATION															
ROADWAY	STATION	OFFSET	EXCAV (CHAN)	STRUCT EXCAV (CULV SMALL)	STRUCT EXCAV (CULV LARGE)	CEM STABIL BKFL	RIPRAP (CONC) (CL B) (5 IN)	CONC BOX CULV (5 FT X 3 FT)	CONC BOX CULV (6 FT X 4 FT)	CONC BOX CULV (6 FT X 4 FT) (MOD)	CONC BOX CULV (8 FT X 4 FT)	RC PIPE (CL III) (24 IN)	RC PIPE (CL IV) (18 IN)	RC PIPE (CL IV) (30 IN)	RC PIPE (CL IV) (36 IN)
			(CY)	CY	CY	CY	CY	LF	LF	LF	LF	LF	LF	LF	LF
LOOP 20 (CSJ:0086-14-023)															
WB FRTG RD	470+55.341				29.2	11.7	9.3				20.0				
WB FRTG RD	481+42.189			7.4		4.8						16.5			
EB FRTG RD	470+09.000		154.1	76.8		82.3					103.0				
EB FRTG RD	479+61.570		523.1		119.8	96.7			204.0						
LOOP 20	505+72.000		163.6		170.1	85.3	7.2			180.0					
LOOP 20	503+50.000	26' RT													
		SUBTOTAL	840.8	84.2	319.1	280.8	16.5	0.0	204.0	180.0	123.0	16.5	0.0	0.0	0.0
IH 35 (CSJ: 0018-06-131)															
RR MP 404.91-404.93			1461.0												
SB FRTG RD	212+24.000					48.2		80.0							
SB FRTG RD	228+30.000					82.0		198.0							
LOOP 20 DETOUR (RR MP 404.95)															
LOOP 20 DETOUR	4+15.06			172.2		84.5									225.0
WB FRTG RD	442+22.00			186.9		137.5							480.0		
		SUBTOTAL	1461.0	359.1	0	352.2	0.0	278.0	0.0	0.0	0.0	0.0	480.0	0.0	225.0
TOTAL			2301.8	443.3	319.1	633.0	16.5	278.0	204.0	180.0	123.0	16.5	480.0	0.0	225.0

STATE OF TEXAS
RUDY L. GOMEZ
58664
REGISTERED PROFESSIONAL ENGINEER

The seal appearing on this document was authorized by Rudy L. Gomez P.E. 58664, on January 28, 2000.

DATE	BY	REV	REVISION
06/03/99	RG	1	QUANTITIES
06/16/99	RG	2	CHANNEL EXCAV
12/7/99	RG	3	400-504 ADDED

© 1999 Texas Department of Transportation

Brown & Root
HOUSTON, TEXAS

IH 35/LOOP 20

SUMMARY OF CULVERT QUANTITIES
BRIDGE CLASS CULVERT
& MISC. CULVERT

SHEET 1 OF 2

FED RD DIV NO	STATE PROJECT NO	SHEET NO
6	C86-14-23	63

STATE	STATE DIST NO	COUNTY
TEXAS	22	WEBB

CONT	SECT	JOB	HIGHWAY NO
0086	14	023	LOOP 20

D13QSX01.DGN-06 12-07-99 BAR_HO_ES05 \HCIVIL\CF0039\PHASE2

SUMMARY OF NON-BRIDGE CLASS CULVERT QUANTITIES

ITEM NO. - DESCRIPTION			466-522	466-523	466-604	466-612	467-	467-	467-696	467-697
LOCATION										
ROADWAY	STATION	OFFSET	WINGWALL (PW-30) (H= 3 FT)	WINGWALL (PW-30) (H= 4 FT)	WINGWALL (MCW-P-30) (H= 4 FT)	WINGWALL (MCW-P-45) (H= 3 FT)	SAFETY END TRT (TY II)(24 IN) (RCP)(4:1) (C)	SAFETY END TRT (TY II)(18 IN) (RCP)(3:1) (C)	SAFETY END TRT TY II)(30 IN) (RCP)(3:1) (C)	SAFETY END TRT (TY II)(36 IN) (RCP)(3:1) (C)
			EA	EA	EA	EA	EA	EA	EA	EA
LOOP 20 (CSJ:0086-14-023)										
WB FRTG RD	470+55.341									
WB FRTG RD	470+55.341									
WB FRTG RD	481+42.189						3			
EB FRTG RD	470+09.000			2						
EB FRTG RD	479+61.570				2					
LOOP 20	505+72.000									
		SUBTOTAL	0	2	2	0	3	0	0	0
IH 35 (CSJ: 0018-06-131)										
SB FRTG RD	212+24.000		1							
SB FRTG RD	228+30.000					1				
LOOP 20 DETOUR (RR MP 404.95)										
LOOP 20 DETOUR	4+15.06									3
WB FRTG RD	442+22.00							4		
		SUBTOTAL	1	0	0	1	0	4	0	3
TOTAL			1	2	2	1	3	4	0	3

STATE OF TEXAS
RUDY L. GOMEZ
58664
REGISTERED PROFESSIONAL ENGINEER

The seal appearing on this document was authorized by Rudy L. Gomez P.E. 58664, on June 3, 1999.

DATE	BY	REV	REVISION
06/03/99	RG	1	QUANTITIES

© 1999 Texas Department of Transportation

Brown & Root
HOUSTON, TEXAS

IH 35/LOOP 20

SUMMARY OF CULVERT QUANTITIES
BRIDGE CLASS CULVERT
& MISC. CULVERT

SHEET 2 OF 2

FED RD DIV NO	STATE PROJECT NO		SHEET NO
6	C86-14-23		64
STATE	STATE DIST NO	COUNTY	
TEXAS	22	WEBB	
CONT	SECT	JOB	HIGHWAY NO
0086	14	023	LOOP 20

D13QSX02.DGN-04 04-06-99 BAR_HO_ES05 \HCIVIL\CF0039\PHASE2

SEE REVISION
REV. 6-25-99

SUMMARY OF NON-BRIDGE CLASS CULVERT QUANTITIES

ITEM NO. - DESCRIPTION			466-522	466-523	466-586	466-604	466-612	467-	467-	467-696	467-697
LOCATION			WINGWALL (PW-30) (H= 3 FT)	WINGWALL (PW-30) (H= 4 FT)	WINGWALL (MCW-P) (H= 4 FT)	WINGWALL (MCW-P-30) (H= 4 FT)	WINGWALL (MCW-P-45) (H= 3 FT)	SAFETY END TRT (TY II)(24 IN) (RCP)(4:1) (C)	SAFETY END TRT (TY II)(18 IN) (RCP)(3:1) (C)	SAFETY END TRT TY II)(30 IN) (RCP)(3:1) (C)	SAFETY END TRT (TY II)(36 IN) (RCP)(3:1) (C)
ROADWAY	STATION	OFFSET	EA	EA	EA	EA	EA	EA	EA	EA	EA
LOOP 20 (CSJ:0086-14-023)											
WB FRTG RD	470+55.341										
WB FRTG RD	470+55.341				1						
WB FRTG RD	481+42.189							3			
EB FRTG RD	470+09.000			2							
EB FRTG RD	479+61.570					2					
LOOP 20	505+72.000				2						
		SUBTOTAL	0	2	3	2	0	3	0	0	0
IH 35 (CSJ: 0018-06-131)											
SB FRTG RD	212+24.000		1								
SB FRTG RD	228+30.000						1				
LOOP 20 DETOUR (RR MP 404.95)											
LOOP 20 DETOUR	4+15.06										3
WB FRTG RD	442+22.00								4		
		SUBTOTAL	1	0		0	1	0	4	0	3
TOTAL			1	2	3	2	1	3	4	0	3

STATE OF TEXAS
RUDY L. GOMEZ
58664
REGISTERED PROFESSIONAL ENGINEER

The seal appearing on this document was authorized by Rudy L. Gomez P.E. 58664, on January 28, 2000.

DATE	BY	REV	REVISION
06/03/99	RG	1	QUANTITIES
12/7/99	RG	2	466-0586 ADDED

© 1999 Texas Department of Transportation

Brown & Root
HOUSTON, TEXAS

IH 35/LOOP 20

SUMMARY OF CULVERT QUANTITIES
BRIDGE CLASS CULVERT
& MISC. CULVERT

SHEET 2 OF 2

FED RD DIV NO	STATE PROJECT NO		SHEET NO
6	C86-14-23		64
STATE	STATE DIST NO	COUNTY	
TEXAS	22	WEBB	
CONT	SECT	JOB	HIGHWAY NO
0086	14	023	LOOP 20

D13GSX02.DGN-05 12-07-99 BAR_HO_ES05 \HCIVIL\CF0039\PHASE2

SUMMARY OF REMOVAL OF EXISTING STRUCTURES

ITEM NO. - DESCRIPTION			496-	496-517	496-	496-504	496-518
LOCATION			REMOV OLD STR (WINGWALL)	REMOV OLD STR (SMALL) (INLET)	REMOV OLD STR (SET)	REMOV OLD STR (PIPE)	REMOV OLD STR (SMALL) (MANHOLE)
ROADWAY	STATION	OFFSET	EA	EA	EA	LF	EA
LOOP 20 (CSJ:0086-14-023)							
WB FRTG RD	470+55.341						
WB FRTG RD	404+40.000				2	408.0	1
WB FRTG RD	435+00.000					188.0	
WB FRTG RD	470+55.341				1		
WB FRTG RD	481+42.189				1		
EB FRTG RD	470+09.000						
EB FRTG RD	479+61.570						
LOOP 20	505+72.000						
		SUBTOTAL	0.0	0	4	596.0	1
IH 35 (CSJ: 0018-06-131)							
SB FRTG RD	132+00.000					148.0	
SB FRTG RD	160+39.285		1				
SB FRTG RD	187+65.605		1				
SB FRTG RD	212+24.000			1		160.0	
SB FRTG RD	228+30.000			1		264.0	
PRIVATE DR (RR MP 404.67)							
PRIVATE DR	10+57.52				4	120.0	
PRIVATE DR	11+17.52				4	120.0	
LOOP 20 DETOUR (RR MP 404.95)							
LOOP 20 DETOUR	4+15.06				9	513.0	
WB FRTG RD	442+22.00				4	812.0	
		SUBTOTAL	2	2	21	2137.0	0
TOTALS			2	2	25	2733.0	1

SUMMARY OF CURB OUTLETS

STATION	LT/RT	ITEM 420-0569 CL A CONC (CURB OUTLET)(TY I)	ITEM 465-**** CL A CONC (CURB INLET/OUTLET)(COMPL)(SPL)
		EA	EA
IH 35 (CSJ 0018-06-131)			
IH 35 SB FRTG RD STA 127+31	RT	1.0	
IH 35 SB FRTG RD STA 133+51	RT	1.0	
IH 35 NB FRTG RD STA 127+60	LT	1.0	
IH 35 NB FRTG RD STA 133+51	LT	1.0	
IH 35 SB FRTG RD STA 157+00	LT	1.0	
IH 35 SB FRTG RD STA 161+27	LT	1.0	
LP 20 EB FRTG RD STA 436+04	LT	1.0	
SUBTOTAL (CSJ 0018-06-131)		7.0	
LOOP 20 (CSJ 0086-14-023)			
LP 20 WB FRTG RD STA 433+00	RT	1.0	
LP 20 WB FRTG RD STA 435+83	RT	1.0	
LP 20 WB FRTG RD STA 464+00	LT		1.0
LP 20 WB FRTG RD STA 468+00	LT		1.0
LP 20 WB FRTG RD STA 474+00	LT		1.0
LP 20 WB FRTG RD STA 478+00	LT		1.0
LP 20 WB FRTG RD STA 482+00	LT		1.0
LP 20 WB FRTG RD STA 486+00	LT		1.0
LP 20 WB FRTG RD STA 490+00	LT		1.0
LP 20 WB FRTG RD STA 491+30	RT	1.0	
LP 20 WB FRTG RD STA 493+40	LT		1.0
LP 20 WB FRTG RD STA 496+20	RT	1.0	
LP 20 WB FRTG RD STA 500+65	RT	1.0	
SUBTOTAL (CSJ 0086-14-023)		6.0	8.0
UNIROYAL RD (CSJ 0018-05-057)			
UNIROYAL RD STA 11+05	LT	1.0	
UNIROYAL RD STA 11+05	RT	1.0	
SUBTOTAL (CSJ 0018-05-057)		2.0	
TOTAL		15.0	8.0

STATE OF TEXAS
RUDY L. GOMEZ
58664
REGISTERED PROFESSIONAL ENGINEER

The seal appearing on this document was authorized by Rudy L. Gomez P.E. 58664, on June 3, 1999.

DATE	BY	REV	REVISION
06/03/99	DV	1	REMOVE OLD STR (PIPE)

© 1999 Texas Department of Transportation

Brown & Root
HOUSTON, TEXAS

IH 35/LOOP 20

SUMMARY OF REMOVAL OF EXISTING DRAINAGE STRUCTURES QUANTITIES & CURB OUTLETS

SHEET 1 OF 1

FED RD DIV NO	STATE PROJECT NO		SHEET NO
6	C86-14-23		65
STATE	STATE DIST NO	COUNTY	
TEXAS	22	WEBB	
CONT	SECT	JOB	HIGHWAY NO
0086	14	023	LOOP 20

D13QSX03.DGN-04 06-03-99 BAR_HO_ES05 \HCIVIL\CF0039\PHASE2

REV. 6-25-99

SUMMARY OF RETAINING WALLS

ITEM NO. - DESCRIPTION	403-0501	423-0501	423-0508	423-0511		432-0524	550-0501	556-0508	556-0510	4413-0501
LOCATION/WALL ID	TEMPORARY SPL SHORING (BRIDGE CONST)	RETAINING WALL (MSE)	RETAINING WALL (CAST -IN-PLACE)	RETAINING WALL (SOIL NAILED)	SOIL NAIL TEST ANCHORS *	RIPRAP (CONC) (CL B) (4 IN)	CHAIN LINK FENCE (6')	PIPE UNDDR (TY 8) (6") *	PIPE UNDDR (TY 10) (6") *	SOIL NAIL
	SF	SF	SF	SF	EA	CY	LF	FT	FT	LF
LOOP 20 (CSJ 0086-14-023)										
A				13786.0	4.0	81.6	1102.0	1102.2	12.8	1546.5
B		4810.4				51.9		700.0	22.0	
C				3117.0	1.0	15.3	190.0	229.3	8.5	3475.0
D				2598.0	1.0	14.7	198.0	237.5	8.5	3830.0
E				1766.0	1.0	12.4	190.0	229.5	12.0	3953.0
F				2751.0	1.0	15.2	201.0	240.4	9.0	4536.0
LOOP 20 SUBTOTAL		4810.4		24018.0	8.0	191.1	1881.0	2738.9	72.8	31259.0
IH 35 (CSJ 0018-06-131)										
J				3015.0	2.0	24.1		325.6	5.7	1962.0
K				2040.0	2.0	22.1		298.9	0.0	1548.0
L				7824.0	2.0	76.8		1038.4	19.0	5400.0
M				4347.0	2.0	38.3		517.3	7.0	3312.0
TEMP	4820.0									
DC1-RW1		6286.9				3.0		671.0	8.5	
DC1-RW2		4632.9				12.7		503.0	22.0	
DC1-RW3		2759.0				7.4		343.0	10.3	
DC1-RW4		3270.9				10.6		428.3	20.0	
DC2-RW1		3363.9				11.1		419.0	8.6	
DC2-RW2		3256.3				11.3		456.9	20.0	
DC2-RW3		10655.7				12.1		956.4	5.0	
DC2-RW4		5131.4				18.2		738.0	126.0	
IH 35 SUBTOTAL	4820.0	39357.0	0.0	17226.0	8.0	247.7	0.0	6695.8	252.1	12222.0
PROJECT TOTALS	4820.0	44167.4		41244.0	16.0	438.8	1881.0	9434.7	324.9	43481.0

* FOR CONTRACTOR INFORMATION ONLY
(TO BE PAID FOR UNDER ITEM 423, "RETAINING WALL")

STATE OF TEXAS
JAMES B. HORNSBY
81485
REGISTERED PROFESSIONAL ENGINEER

The seal appearing on this document was authorized by James B. Hornsby P.E. 81485, on June 3, 1999.

DATE	BY	REV	REVISION
6/03/99	JBH	01	QUANTITIES

© 1999 Texas Department of Transportation

Brown & Root
HOUSTON, TEXAS

IH 35/LOOP 20

SUMMARY OF RETAINING WALL QUANTITIES

SHEET 1 OF 1

FED RD DIV NO	STATE PROJECT NO	SHEET NO
6		66

STATE	STATE DIST NO	COUNTY
TEXAS	22	WEBB

CONT	SECT	JOB	HIGHWAY NO

SEE REVISION
REV. 6-25-99

REF FILE(S): J01LOX01.BDR. BDR LV ON = 16.45.56.57.60-62

D310SX02.DGN-08 06-02-99 BAR_HO_ES05 \HCIVIL\CF0039\PHASE2

SUMMARY OF RETAINING WALLS

ITEM NO. - DESCRIPTION	403-0501	423-0501	423-0508	423-0511		432-0524	550-0501	556-0508	556-0510	4413-0501
LOCATION/WALL ID	TEMPORARY SPL SHORING (BRIDGE CONST)	RETAINING WALL (MSE)	RETAINING WALL (CAST -IN-PLACE)	RETAINING WALL (SOIL NAILED)	SOIL NAIL TEST ANCHORS *	RIPRAP (CONC) (CL B) (4 IN)	CHAIN LINK FENCE (6')	PIPE UNDDR (TY 8) (6") *	PIPE UNDDR (TY 10) (6") *	SOIL NAIL
	SF	SF	SF	SF	EA	CY	LF	FT	FT	LF
LOOP 20 (CSJ 0086-14-023)										
A				13786.0	4.0	81.6	1102.0	1102.2	12.8	1546.5
B		15064.1				61.2		1240.0	45.0	
C				3117.0	1.0	15.3	190.0	229.3	8.5	3475.0
D				2598.0	1.0	14.7	198.0	237.5	8.5	3830.0
E				1766.0	1.0	12.4	190.0	229.5	12.0	3953.0
F				2751.0	1.0	15.2	201.0	240.4	9.0	4536.0
H		2870.5				22.2		450.0	14.0	
LOOP 20 SUBTOTAL		17934.6		24018.0	8.0	222.6	1881.0	3728.9	109.8	31259.0
IH 35 (CSJ 0018-06-131)										
J				3015.0	2.0	24.1		325.6	5.7	1962.0
K				2040.0	2.0	22.1		298.9	0.0	1548.0
L				7824.0	2.0	76.8		1038.4	19.0	5400.0
M				4347.0	2.0	38.3		517.3	7.0	3312.0
TEMP	4820.0									
DC1-RW1		6286.9				3.0		671.0	8.5	
DC1-RW2		4632.9				12.7		503.0	22.0	
DC1-RW3		2759.0				7.4		343.0	10.3	
DC1-RW4		3270.9				10.6		428.3	20.0	
DC2-RW1		3363.9				11.1		419.0	8.6	
DC2-RW2		3256.3				11.3		456.9	20.0	
DC2-RW3		10655.7				12.1		956.4	5.0	
DC2-RW4		5131.4				18.2		738.0	126.0	
IH 35 SUBTOTAL	4820.0	39357.0	0.0	17226.0	8.0	247.7	0.0	6695.8	252.1	12222.0
PROJECT TOTALS	4820.0	57291.6		41244.0	16.0	470.3	1881.0	10424.7	361.9	43481.0

* FOR CONTRACTOR INFORMATION ONLY
(TO BE PAID FOR UNDER ITEM 423, "RETAINING WALL")

STATE OF TEXAS
JAMES B. HORNSBY
81485
REGISTERED PROFESSIONAL ENGINEER

The seal appearing on this document was authorized by James B. Hornsby P.E. 81485, on September 30, 1999.

DATE	BY	REV	REVISION
9/30/99	JBH	01	QUANTITIES

© 1999 Texas Department of Transportation

Brown & Root
HOUSTON, TEXAS

IH 35/LOOP 20

SUMMARY OF RETAINING WALL QUANTITIES

SHEET 1 OF 1

FED RD DIV NO	STATE PROJECT NO		SHEET NO
6			66
STATE	STATE DIST NO	COUNTY	
TEXAS	22	WEBB	
CONT	SECT	JOB	HIGHWAY NO

REF FILE(S): J01LOX01.BDR, BDR LV ON = 16,45,56,57,60-62

D310SX02.DGN-08 09-30-99 BAR_HO_ES05 \HCIVIL\CF0039\PHASE2

SUMMARY OF ESTIMATED QUANTITIES

DESCRIPTION	400-0502 STRUCT EXCAV * CY	403-0501 TEMPORARY SPL SHORING SF	416-0503 DRILLED SHAFTS (18 IN) LF	416-0504 DRILLED SHAFTS (30 IN) LF	416-0506 DRILLED SHAFTS (36 IN) LF	416-0507 DRILLED SHAFTS (42 IN) LF	416-0509 DRILLED SHAFTS (54 IN) LF	416-0510 DRILLED SHAFTS (60 IN) LF	420-0513 CL "C" CONC (ABUT) CY	420-0514 CL "C" CONC (BENT) CY	420-0515 CL "C" CONC (FOOTING) CY	420-0536 CL "F" CONC (BENT) CY
DIRECT CONNECTOR #1	2.151	13.934	0	0	300	0	1.900	214	34.2	4.607.5	1.398.4	136.5
DIRECT CONNECTOR #2	1.869	12.592	0	0	316	0	1.996	290	34.2	3.696.6	1.183.6	
SOUTHBOUND MAINLANES	0	0	134	365	0	271	0	0	59.8	226.0	0.0	
NORTHBOUND MAINLANES	0	0	134	365	0	400	0	0	59.8	154.0	0.0	
TEMPORARY OVERPASS	0	0	0	400	0	300	0	0	40.2	42.8	0.0	
TOTALS (CSJ 0018-06-131)	4.020	26.526	268	1.130	616	971	3.896	504	228.2	8.726.9	2.582.0	136.5

SUMMARY OF ESTIMATED QUANTITIES (CONTINUED)

DESCRIPTION	422-0505 REINF CONC SLAB SF	425-0503 PRESTR CONC BM (TY C) LF	425-0507 PRESTR CONC BM (TY IV) LF	428-0501 CONC SURF TREAT SY	434-0505 SLIDING ELASTOMERIC BEARING (SE5) EA	434-0506 SLIDING ELASTOMERIC BEARING (SE6) EA	434-0507 SLIDING ELASTOMERIC BEARING (SE7) EA	434-0514 SLIDING ELASTOMERIC BEARING (SE8) EA	435-0513 ELASTOMERIC BEARING (IF6) EA	435-0514 ELASTOMERIC BEARING (IF7) EA	435-0522 ELASTOMERIC BEARING (IF8) EA
DIRECT CONNECTOR #1	145.101	0.00	12.000.87	14.992	4	4	4	12	0	8	16
DIRECT CONNECTOR #2	127.666	0.00	11.480.87	13.205	12	0	12	0	12	8	0
SOUTHBOUND MAINLANES	29.580	4.064.20	0.00	3.150	0	0	0	0	0	0	0
NORTHBOUND MAINLANES	29.580	4.064.20	0.00	3.150	0	0	0	0	0	0	0
TEMPORARY OVERPASS	8.200	1.104.72	0.00	0	0	0	0	0	0	0	0
TOTALS (CSJ 0018-06-131)	340.127	9.233.12	23.481.74	34.497	16	4	16	12	12	16	16

SUMMARY OF ESTIMATED QUANTITIES (CONTINUED)

DESCRIPTION	440-**** REINF STEEL * LB	442-0502 STRUCT STL (HS) LB	444-0501 BRIDGE PROTECTIVE ASSEMBLY EA	444-0505 SIGN & BRACKET EA	450-0526 RAIL (TY SSTR) LF	454-0503 SEALED EXP JOINT (4 IN) LF	454-0504 SEALED EXP JOINT (5 IN) LF	496-0501 REMOVE OLD STRUCT (LARGE) EA	512-0501 RAIL (TY PCTB) LF	4228-**** MODULAR EXP JOINT (6 IN) LF
DIRECT CONNECTOR #1	2.296.743	3.584.176	0	0	8.394.0	372	26	0	0.0	54
DIRECT CONNECTOR #2	1.904.976	2.384.599	0	1	7.261.6	395	79	0	0.0	0
SOUTHBOUND MAINLANES	283.744	0	1	1	1.068.0	172	0	2	0.0	0
NORTHBOUND MAINLANES	286.059	0	1	1	1.068.0	172	0	1	0.0	0
TEMPORARY OVERPASS	66.608	0	0	0	410.0	0	0	0	205.0	0
TOTALS (CSJ 0018-06-131)	4.838.130	5.968.775	2	3	18.201.6	1.111	105	3	205.0	54

* FOR CONTRACTOR'S INFORMATION ONLY

STATE OF TEXAS
MICHEL S. MAKSOUD
80639
REGISTERED PROFESSIONAL ENGINEER

The seal appearing on this document was authorized by Michel S. Maksoud P.E. 80639, on May 17, 1999.

DATE	BY	REV	REVISION

© 1999 Texas Department of Transportation

Brown & Root
HOUSTON, TEXAS

IH 35

SUMMARY OF BRIDGE QUANTITIES

SHEET 1 OF 1

FED RD DIV NO	STATE PROJECT NO	SHEET NO
6	NH-99(462)	67

STATE	STATE DIST NO	COUNTY
TEXAS	22	WEBB

CONT	SECT	JOB	HIGHWAY NO
0018	06	131	IH 35

SEE REVISION

REF FILE(S): J01LOX01.BDR. BDR LV ON = 5.45.57.60-63

D13QSX13.DGN-04 05-13-99 BAR_HO_ES05 \HCIVIL\CF0039\PHASE2

SUMMARY OF ESTIMATED QUANTITIES

DESCRIPTION	400-0502 STRUCT EXCAV * CY	403-0501 TEMPORARY SPL SHORING SF	416-0503 DRILLED SHAFTS (18 IN) LF	416-0504 DRILLED SHAFTS (30 IN) LF	416-0506 DRILLED SHAFTS (36 IN) LF	416-0507 DRILLED SHAFTS (42 IN) LF	416-0509 DRILLED SHAFTS (54 IN) LF	416-0510 DRILLED SHAFTS (60 IN) LF	420-0513 CL "C" CONC (ABUT) CY	420-0514 CL "C" CONC (BENT) CY	420-0515 CL "C" CONC (FOOTING) CY	420-0536 CL "F" CONC (BENT) CY
DIRECT CONNECTOR #1	2,151	13,934	0	0	300	0	1,900	214	34.2	4,765.2	1,398.4	136.5
DIRECT CONNECTOR #2	1,869	12,592	0	0	316	0	2,018	290	34.2	3,696.6	1,183.6	
SOUTHBOUND MAINLANES	0	0	80	365	0	271	0	0	59.8	238.8	0.0	
NORTHBOUND MAINLANES	0	0	80	365	0	400	0	0	59.8	238.8	0.0	
TEMPORARY OVERPASS	0	0	0	400	0	300	0	0	40.2	42.8	0.0	
TOTALS (CSJ 0018-06-131)	4,020	26,526	160	1,130	616	971	3,918	504	228.2	8,982.2	2,582.0	136.5

SUMMARY OF ESTIMATED QUANTITIES (CONTINUED)

DESCRIPTION	422-0505 REINF CONC SLAB SF	425-0503 PRESTR CONC BM (TY C) LF	425-0507 PRESTR CONC BM (TY IV) LF	428-0501 CONC SURF TREAT SY	434-0505 SLIDING ELASTOMERIC BEARING (SE5) EA	434-0506 SLIDING ELASTOMERIC BEARING (SE6) EA	434-0507 SLIDING ELASTOMERIC BEARING (SE7) EA	434-0514 SLIDING ELASTOMERIC BEARING (SE8) EA	435-0513 ELASTOMERIC BEARING (IF6) EA	435-0514 ELASTOMERIC BEARING (IF7) EA	435-0522 ELASTOMERIC BEARING (IF8) EA
DIRECT CONNECTOR #1	145,101	0.00	12,000.87	14,992	4	4	4	12	0	8	16
DIRECT CONNECTOR #2	127,666	0.00	11,480.87	13,205	12	0	12	0	12	8	0
SOUTHBOUND MAINLANES	29,580	4,064.20	0.00	3,150	0	0	0	0	0	0	0
NORTHBOUND MAINLANES	29,580	4,064.20	0.00	3,150	0	0	0	0	0	0	0
TEMPORARY OVERPASS	8,200	1,104.72	0.00	0	0	0	0	0	0	0	0
TOTALS (CSJ 0018-06-131)	340,127	9,233.12	23,481.74	34,497	16	4	16	12	12	16	16

SUMMARY OF ESTIMATED QUANTITIES (CONTINUED)

DESCRIPTION	440-**** REINF STEEL * LB	442-0502 STRUCT STL (HS) LB	444-0501 BRIDGE PROTECTIVE ASSEMBLY EA	444-0505 SIGN & BRACKET EA	450-0526 RAIL (TY SSTR) LF	454-0503 SEALED EXP JOINT (4 IN) LF	454-0504 SEALED EXP JOINT (5 IN) LF	496-0501 REMOVE OLD STRUCT (LARGE) EA	512-0501 RAIL (TY PCTB) LF	4228-**** MODULAR EXP JOINT (6 IN) LF
DIRECT CONNECTOR #1	2,296,743	3,584,176	0	0	8,394.0	372	26	0	0.0	54
DIRECT CONNECTOR #2	1,904,976	2,384,599	0	1	7,261.6	395	79	0	0.0	0
SOUTHBOUND MAINLANES	283,744	0	1	1	1,068.0	172	0	2	0.0	0
NORTHBOUND MAINLANES	286,059	0	1	1	1,068.0	172	0	1	0.0	0
TEMPORARY OVERPASS	66,608	0	0	0	410.0	0	0	0	205.0	0
TOTALS (CSJ 0018-06-131)	4,838,130	5,968,775	2	3	18,201.6	1,111	105	3	205.0	54

* FOR CONTRACTOR'S INFORMATION ONLY

STATE OF TEXAS
MICHEL S. MAKSOUD
80639
REGISTERED PROFESSIONAL ENGINEER

The seal appearing on this document was authorized by Michel S. Maksoud P.E. 80639, on July 29, 1999.

DATE	BY	REV	REVISION
7-28-99	MM	1	ESTIMATED QUANTITIES

© 1999 Texas Department of Transportation

Brown & Root
HOUSTON, TEXAS

IH 35

SUMMARY OF BRIDGE QUANTITIES

SHEET 1 OF 2

FED RD DIV NO	STATE PROJECT NO	SHEET NO
6	NH-99(462)	67

STATE	STATE DIST NO	COUNTY
TEXAS	22	WEBB

CONT	SECT	JOB	HIGHWAY NO
0018	06	131	IH 35

REF FILE(S): J01LOX01.BDR, BDR LV ON = 5,45,57,60-63

D13QSX13.DGN-05 07-28-99 BAR_HO_ES05 \HOIVL\CF0039\PHASE2

SUMMARY OF ESTIMATED QUANTITIES

DESCRIPTION	416-0509 DRILLED SHAFTS (54 IN) LF	416-0521 DRILLED SHAFTS (24 IN) LF	420-0513 CL "C" CONC (ABUT) CY	420-0637 CL "C" CONC (SLAB) CY	422-0506 CL "F" CONC (SLAB) CY	442-0502 STRUCT STL (HS) LB	442-0532 STRUCT STL (HS) (SHOES) LB	442-0533 STRUCT STL (HYC) LB	444-0505 SIGN & BRACKET EA	450-0694 RAIL (TY PR1) (MOD) LF	458-0513 WATRPF (TY RR-2) (MOD) SY
UPRR LOOP 20 EB FRTGE RD UNDERPASS	464	93	190.0	23.2	2,321.0	280,000	27,500	1,275	1	163.3	280.0
UPRR LOOP 20 WB FRTGE RD UNDERPASS	476	96	191.0	26.6	2,796.0	340,000	31,900	1,541	1	187.4	340.0
TOTALS	940	189	381.0	49.8	5,117.0	620,000	59,400	2,816	2	350.7	620.0

SUMMARY OF ESTIMATED QUANTITIES

DESCRIPTION	458-0514 WATRPF (TY 1,3,4 OR 6) SY	481-0514 PVC PIPE (SCH 40) (6 IN) LF	481-0515 PVC PIPE (SCH 40) (8 IN) LF	556-0508 PIPE UNDDR (TY 8) (6 IN) LF	4505-0501 DECK DRAIN (HALF ROUND) (8 IN) LF
UPRR LOOP 20 EB FRTGE RD UNDERPASS	70	100.00	75.00	80	126
UPRR LOOP 20 WB FRTGE RD UNDERPASS	70	100.00	75.00	80	146
TOTALS	140	200.00	150.00	160	272

STATE OF TEXAS
MICHEL S. MAKSOUD
80639
REGISTERED PROFESSIONAL ENGINEER

The seal appearing on this document was authorized by Michel S. Maksoud P.E. 80639, on July 29, 1999.

DATE	BY	REV	REVISION
7-28-99	MM	1	ESTIMATED QUANTITIES

© 1999 Texas Department of Transportation

Brown & Root
HOUSTON, TEXAS

IH 35

SUMMARY OF BRIDGE QUANTITIES

SHEET 2 OF 2

FED RD DIV NO	STATE PROJECT NO	SHEET NO
6	NH-99(462)	67A

STATE	STATE DIST NO	COUNTY
TEXAS	22	WEBB

CONT	SECT	JOB	HIGHWAY NO
0018	06	131	IH 35

REF FILE(S): J01LOX01.BDR, BDR LV ON = 5,45,57,60-63

D13OSX14.DGN-01 07-27-99 BAR_HO_ES05 \HQIVIL\CF0039\PHASE2

SUMMARY OF SIGNING QUANTITIES

ITEM NO. - DESCRIPTION			416-516	416-517	416-519	416-520	514-517	634-501	636-501	642-501	644-501	644-502	644-503	644-504	644-505	644-506	644-511	644-512	644-518	647-501
LOCATION			DRILL SHAFTS (SIGN MTS) (30 IN)	DRILL SHAFTS (SIGN MTS) (36 IN)	DRILL SHAFTS (SIGN MTS) (48 IN)	DRILL SHAFTS (SIGN MTS) (54 IN)	PERM CONC TRF BAR SGL SLP (TY 2) (H=42 IN)	PLYWOOD SIGNS (TY A)	ALUM SIGNS (TY A)	ALUM SIGNS (TY O)	SMALL RDSD SGN ASSM (TY A)	SMALL RDSD SGN ASSM (TY A-1)	SMALL RDSD SGN ASSM (TY B)	SMALL RDSD SGN ASSM (TY C)	SMALL RDSD SGN ASSM (TY D-1)	SMALL RDSD SGN ASSM (TY D-2)	SMALL RDSD SGN ASSM (TY F)	SMALL RDSD SGN ASSM (TY G)	SMALL RDSD SGN ASSM (TY A) (FRP)	LG RDSD SGN SUPT (STRUCT STL)
SHEET NO.	BEGINNING STATION	ENDING STATION	LF	LF	LF	LF	LF	SF	SF	SF	EA	EA	EA	EA	EA	EA	EA	EA	EA	LB
CSJ 0086-14-023																				
LOOP 20																				
1	382+00.00	392+00.00																		
2	392+00.00	402+00.00	56.00	70.00			550.00	23.91		996.50						2.00				
3	402+00.00	412+00.00		56.00				30.00	20.25	476.50						5.00				
4	412+00.00	422+00.00			18.50				20.25	136.50						2.00	1.00			
5	422+00.00	433+00.00							9.41	181.50	6.00	1.00			1.00	2.00		1.00		
6	433+00.00	443+00.00									19.00	1.00	2.00	2.00		7.00				
7	443+00.00	453+00.00									3.00					1.00				
8	453+00.00	463+00.00									7.00				1.00	1.00				
9	463+00.00	473+00.00														2.00				
10	473+00.00	483+00.00									4.00				1.00					
11	483+00.00	493+00.00									3.00						2.00			
12	493+00.00	503+00.00									4.00	4.00				4.00	2.00	2.00		
13	503+00.00	513+00.00									2.00	1.00					4.00			
14	513+00.00	522+00.00									1.00	1.00								
McPHERSON ROAD																				
1	1+79.29	9+75.00									2.00	1.00					2.00			
2	9+75.00	18+20.36									2.00	1.00					2.00			
GRAND CENTRAL ROAD																				
1	0+00.00	15+00.00									5.00									
SUBTOTAL CSJ 0086-14-023			56.00	126.00	18.50	0.00	550.00	53.91	49.91	1791.00	58.00	10.00	2.00	2.00	3.00	4.00	32.00	5.00	1.00	0.00
CSJ 0018-05-057																				
UNIROYAL ROAD																				
1	10+00.00	15+62.21															6.00	1.00		
SUBTOTAL 0018-05-057			0.00	0.00	0.00	0.00		0.00	0.00	0.00	0.00	0.00	0.00	0.00	0.00	0.00	6.00	1.00	0.00	0.00
CSJ 0018-06-131																				
IH 35																				
1	61+00.00	96+00.00						661.75	18.00											2576.00
2	96+00.00	106+00.00						330.75	9.00								2.00			1288.00
3	106+00.00	116+00.00	64.00					272.25	35.66	272.25		1.00					1.00			
4	116+00.00	126+00.00						37.00			11.00						6.00			195.00
5	126+00.00	136+00.00						81.24			2.00	2.00	1.00	3.00		6.00	7.00			542.00
6	136+00.00	146+00.00							9.00	224.00							3.00			
7	146+00.00	156+00.00									1.00	1.00					3.00			
8	156+00.00	166+00.00						37.00	9.00											195.00
9	166+00.00	176+00.00		64.00				276.00	35.66	473.00	5.00	2.00			3.00		1.00	2.00		1036.00
10	176+00.00	186+00.00						330.75	9.00		2.00									1288.00
11	186+00.00	196+00.00						330.75	9.00											1288.00
12	196+00.00	206+00.00																		
13	206+00.00	216+00.00									1.00									
14	216+00.00	225+00.00						330.75	9.00											1288.00
15	225+00.00	234+00.00									1.00									
16	234+00.00	243+00.00									3.00				1.00		2.00			
17	243+00.00	253+00.00						272.25	26.25		3.00									1038.00
18	253+00.00	TO END						520.00	52.50											2076.00
SUBTOTAL CSJ 0018-106-131			64.00	64.00	0.00	0.00	0.00	3480.49	222.07	969.25	29.00	6.00	1.00	3.00	4.00	6.00	25.00	2.00	0.00	12810.00
TOTALS			120.00	190.00	18.50	0.00	550.00	3534.40	271.98	2760.25	87.00	16.00	3.00	5.00	7.00	10.00	63.00	8.00	1.00	12810.00

STATE OF TEXAS
CHARLES M. SHINE
62999
REGISTERED PROFESSIONAL ENGINEER

The seal appearing on this document was authorized by Charles Shine P.E. 62999, on June 16, 1999.

DATE	BY	REV	REVISION
6/3/99	EK	01	QUANTITIES
6/16/99	JL	01	QUANTITIES

© 1999 Texas Department of Transportation

Brown & Root
HOUSTON, TEXAS

IH 35/LOOP 20

SUMMARY OF SIGNING QUANTITIES

SHEET 1 OF 2

FED RD DIV NO	STATE PROJECT NO		SHEET NO
6	NH-99(462)		68
STATE	STATE DIST NO	COUNTY	
TEXAS	22	WEBB	
CONT	SECT	JOB	HIGHWAY NO
0018	06	131	IH 35

D22QSX01.DGN-08 06-16-99 BAR_HO_ES05 \HCIVIL\CF0039\PHASE2

REV. 6-25-99

SUMMARY OF SIGNING QUANTITIES

ITEM NO. - DESCRIPTION			650-553	650-555	650-560	650-561	650-562	650-603	656-501	656-502	658-577
LOCATION			OVHD SGN SUPT (45 FT BRDG) (21.0 HT)	OVHD SGN SUPT (55 FT BRDG) (21.0 HT)	OVHD SGN SUPT (80 FT BRDG) (21.0 HT)	OVHD SGN SUPT (85 FT BRDG) (21.0 HT)	OVHD SGN SUPT (90 FT BRDG) (21.0 HT)	OVHD SGN SUPT (35 FT CANT) (21.0 HT)	FND LG RDSD SGN SUPT (12 IN (DRILL SHFT)	FND LG RDSD SGN SUPT (24 IN (DRILL SHFT)	OBJ MRK ASM SURF MNT (K MARKER)
SHEET NO.	BEGINNING STATION	ENDING STATION	EA	EA	EA	EA	EA	EA	LF	LF	EA
CSJ 0086-14-023											
LOOP 20											
1	382+00.00	392+00.00									
2	392+00.00	402+00.00				1.00	1.00				
3	402+00.00	412+00.00					1.00		7.00		1.00
4	412+00.00	422+00.00						1.00			
5	422+00.00	433+00.00	1.00								
6	433+00.00	443+00.00									
7	443+00.00	453+00.00									
8	453+00.00	463+00.00									1.00
9	463+00.00	473+00.00									
10	473+00.00	483+00.00									
11	483+00.00	493+00.00									
12	493+00.00	503+00.00									
13	503+00.00	513+00.00									
14	513+00.00	522+00.00									
McPHERSON ROAD											
1	1+79.29	9+75.00									
2	9+75.00	18+20.36									
GRAND CENTRAL ROAD											
1	0+00.00	15+00.00									
SUBTOTAL CSJ 0086-14-023			1.00	0.00	0.00		2.00	1.00	7.00	0.00	2.00
CSJ 0018-05-057											
UNIROYAL ROAD											
1	10+00.00	15+62.21									
SUBTOTAL 0018-05-057			0.00	0.00	0.00	1.00	0.00	0.00	0.00	0.00	0.00
CSJ 0018-06-131											
IH 35											
1	61+00.00	96+00.00			2.00					48.00	
2	96+00.00	106+00.00			1.00					21.00	
3	106+00.00	116+00.00									
4	116+00.00	126+00.00							7.00		1.00
5	126+00.00	136+00.00							14.00		
6	136+00.00	146+00.00		1.00							
7	146+00.00	156+00.00									
8	156+00.00	166+00.00							7.00		1.00
9	166+00.00	176+00.00			1.00					21.00	
10	176+00.00	186+00.00									
11	186+00.00	196+00.00								24.00	
12	196+00.00	206+00.00									
13	206+00.00	216+00.00									
14	216+00.00	225+00.00								24.00	
15	225+00.00	234+00.00									
16	234+00.00	243+00.00									
17	243+00.00	253+00.00							7.00	21.00	
18	253+00.00	TO END								42.00	
SUBTOTAL CSJ 0018-106-131			0.00	1.00	4.00	0.00	0.00	0.00	35.00	201.00	2.00
TOTALS			1.00	1.00	4.00	1.00	2.00	1.00	42.00	201.00	4.00

SEE REVISION
REV. 6-25-99

STATE OF TEXAS
CHARLES M. SHINE
R. 62999
REGISTERED PROFESSIONAL ENGINEER

The seal appearing on this document was authorized by Charles Shine P.E. 62999, on June 16, 1999.

DATE	BY	REV	REVISION
06/03/99	EK	01	QUANTITIES
06/16/99	JL	02	QUANTITIES

© 1999 Texas Department of Transportation

Brown & Root
HOUSTON, TEXAS

IH 35/LOOP 20

SUMMARY OF SIGNING QUANTITIES

SHEET 2 OF 2

FED RD DIV NO	STATE PROJECT NO	SHEET NO
6	NH-99(462)	69

STATE	STATE DIST NO	COUNTY
TEXAS	22	WEBB

CONT	SECT	JOB	HIGHWAY NO
0018	06	131	IH 35

D220SX02.DGN-05 06-16-99 BAR_HO_ES05 \HCIVIL\CF0039\PHASE2

SUMMARY OF SIGNING QUANTITIES

ITEM NO. - DESCRIPTION			650-553	650-555	650-560	650-561	650-562	650-603	656-501	656-502	658-577
LOCATION			OVHD SGN SUPT (42 FT BRDG) (21.0 HT)	OVHD SGN SUPT (55 FT BRDG) (21.0 HT)	OVHD SGN SUPT (80 FT BRDG) (21.0 HT)	OVHD SGN SUPT (85 FT BRDG) (21.0 HT)	OVHD SGN SUPT (90 FT BRDG) (21.0 HT)	OVHD SGN SUPT (35 FT CANT) (21.0 HT)	FND LG RDSD SGN SUPT (12 IN (DRILL SHFT)	FND LG RDSD SGN SUPT (24 IN (DRILL SHFT)	OBJ MRK ASM SURF MNT (K MARKER)
SHEET NO.	BEGINNING STATION	ENDING STATION	EA	EA	EA	EA	EA	EA	LF	LF	EA
CSJ 0086-14-023											
LOOP 20											
1	382+00.00	392+00.00									
2	392+00.00	402+00.00				1.00	1.00				
3	402+00.00	412+00.00					1.00		7.00		1.00
4	412+00.00	422+00.00						1.00			
5	422+00.00	433+00.00	1.00								
6	433+00.00	443+00.00									
7	443+00.00	453+00.00									
8	453+00.00	463+00.00									1.00
9	463+00.00	473+00.00									
10	473+00.00	483+00.00									
11	483+00.00	493+00.00									
12	493+00.00	503+00.00									
13	503+00.00	513+00.00									
14	513+00.00	522+00.00									
McPHERSON ROAD											
1	1+79.29	9+75.00									
2	9+75.00	18+20.36									
GRAND CENTRAL ROAD											
1	0+00.00	15+00.00									
SUBTOTAL CSJ 0086-14-023			1.00		0.00		2.00	1.00	7.00	0.00	2.00
CSJ 0018-05-057											
UNIROYAL ROAD											
1	10+00.00	15+62.21									
SUBTOTAL 0018-05-057			0.00		0.00	1.00	0.00	0.00	0.00	0.00	0.00
CSJ 0018-06-131											
IH 35											
1	61+00.00	96+00.00								48.00	
2	96+00.00	106+00.00								21.00	
3	106+00.00	116+00.00			1.00						
4	116+00.00	126+00.00							7.00		1.00
5	126+00.00	136+00.00							14.00		
6	136+00.00	146+00.00	1.00								
7	146+00.00	156+00.00									
8	156+00.00	166+00.00							7.00		1.00
9	166+00.00	176+00.00			1.00					21.00	
10	176+00.00	186+00.00									
11	186+00.00	196+00.00								24.00	
12	196+00.00	206+00.00									
13	206+00.00	216+00.00									
14	216+00.00	225+00.00								24.00	
15	225+00.00	234+00.00									
16	234+00.00	243+00.00									
17	243+00.00	253+00.00							7.00	21.00	
18	253+00.00	TO END								42.00	
SUBTOTAL CSJ 0018-106-131			1.00		2.00	0.00	0.00	0.00	35.00	201.00	2.00
	TOTALS		2.00		2.00	1.00	2.00	1.00	42.00	201.00	4.00

STATE OF TEXAS
CHARLES M. SHINE
62999
REGISTERED PROFESSIONAL ENGINEER

The seal appearing on this document was authorized by Charles Shine P.E. 62999, on September 30, 1999.

DATE	BY	REV	REVISION
06/03/99	EK	01	QUANTITIES
06/16/99	JL	02	QUANTITIES

© 1999 Texas Department of Transportation

Brown & Root
HOUSTON, TEXAS

IH 35/LOOP 20

SUMMARY OF SIGNING QUANTITIES

SHEET 2 OF 2

FED RD DIV NO	STATE PROJECT NO	SHEET NO
6	NH-99(462)	69

STATE	STATE DIST NO	COUNTY
TEXAS	22	WEBB

CONT	SECT	JOB	HIGHWAY NO
0018	06	131	IH 35

D22QSX02.DGN-06 06-30-99 BAR_HO_ES05 \HCIVIL\CF0039\PHASE2

SEE REVISION

SUMMARY OF SIGNING QUANTITIES

ITEM NO. - DESCRIPTION			650-553	650-555	650-560	650-561	650-562	650-603	656-501	656-502	658-577
LOCATION			OVHD SGN SUPT (42 FT BRDG) (21.0 HT)	OVHD SGN SUPT (55 FT BRDG) (21.0 HT)	OVHD SGN SUPT (80 FT BRDG) (21.0 HT)	OVHD SGN SUPT (85 FT BRDG) (21.0 HT)	OVHD SGN SUPT (90 FT BRDG) (21.0 HT)	OVHD SGN SUPT (35 FT CANT) (21.0 HT)	FND LG RDSD SGN SUPT (12 IN (DRILL SHFT)	FND LG RDSD SGN SUPT (24 IN (DRILL SHFT)	OBJ MRK ASM SURF MNT (K MARKER)
SHEET NO.	BEGINNING STATION	ENDING STATION	EA	EA	EA	EA	EA	EA	LF	LF	EA
CSJ 0086-14-023											
LOOP 20											
1	382+00.00	392+00.00									
2	392+00.00	402+00.00				1.00	1.00				
3	402+00.00	412+00.00					1.00		7.00		1.00
4	412+00.00	422+00.00						1.00			
5	422+00.00	433+00.00	1.00								
6	433+00.00	443+00.00									
7	443+00.00	453+00.00									
8	453+00.00	463+00.00									1.00
9	463+00.00	473+00.00									
10	473+00.00	483+00.00									
11	483+00.00	493+00.00									
12	493+00.00	503+00.00									
13	503+00.00	513+00.00									
14	513+00.00	522+00.00									
McPHERSON ROAD											
1	1+79.29	9+75.00									
2	9+75.00	18+20.36									
GRAND CENTRAL ROAD											
1	0+00.00	15+00.00									
SUBTOTAL CSJ 0086-14-023			1.00		0.00		2.00	1.00	7.00	0.00	2.00
CSJ 0018-05-057											
UNIROYAL ROAD											
1	10+00.00	15+62.21									
SUBTOTAL 0018-05-057			0.00		0.00	1.00	0.00	0.00	0.00	0.00	0.00
CSJ 0018-06-131											
	IH 35										
1	61+00.00	96+00.00								48.00	
2	96+00.00	106+00.00								21.00	
3	106+00.00	116+00.00			1.00						
4	116+00.00	126+00.00							7.00		1.00
5	126+00.00	136+00.00							14.00		
6	136+00.00	146+00.00	1.00								
7	146+00.00	156+00.00									
8	156+00.00	166+00.00							7.00		1.00
9	166+00.00	176+00.00			1.00					21.00	
10	176+00.00	186+00.00									
11	186+00.00	196+00.00								24.00	
12	196+00.00	206+00.00									
13	206+00.00	216+00.00									
14	216+00.00	225+00.00								24.00	
15	225+00.00	234+00.00									
16	234+00.00	243+00.00									
17	243+00.00	253+00.00							7.00	21.00	
18	253+00.00	TO END								42.00	
SUBTOTAL CSJ 0018-106-131			1.00		2.00	0.00	0.00	0.00	35.00	201.00	2.00
	TOTALS		2.00		2.00	1.00	2.00	1.00	42.00	201.00	4.00

STATE OF TEXAS
CHARLES M. SHINE
62999
REGISTERED PROFESSIONAL ENGINEER

The seal appearing on this document was authorized by Charles Shine P.E. 62999, on September 30, 1999

DATE	BY	REV	REVISION
06/03/99	EK	01	QUANTITIES
06/16/99	JL	02	QUANTITIES
09/29/99	EK	03	QUANTITIES

© 1999 Texas Department of Transportation

Brown & Root
HOUSTON, TEXAS

IH 35/LOOP 20

SUMMARY OF SIGNING QUANTITIES

SHEET 2 OF 2

FED RD DIV NO	STATE PROJECT NO	SHEET NO
6	NH-99(462)	69

STATE	STATE DIST NO	COUNTY
TEXAS	22	WEBB

CONT	SECT	JOB	HIGHWAY NO
0018	06	131	IH 35

D22QSX02.DGN-06 06-30-99 BAR_HO_ES05 \HCIVIL\CF0039\PHASE2

SUMMARY OF PAVEMENT MARKING QUANTITIES

ITEM NO. - DESCRIPTION			666-501	666-502	666-506	666-509	666-510	666-512	666-513	666-514	666-517	666-524	666-525	666-529	666-530	672-506
LOCATION			REFL PAV MRK TY I (W)(4") (SLD)	REFL PAV MRK TY I (W)(4") (BRK)	REFL PAV MRK TY I (W)(8") (SLD)	REFL PAV MRK TY I (W)(12") (SLD)	REFL PAV MRK TY I (W)(12") (LNDP)	REFL PAV MRK TY I (W)(24") (SLD)	REFL PAV MRK TY I (W) (ARROW)	REFL PAV MRK TY I (W) (DBL ARROW)	REFL PAV MRK TY I (W) (WORD)	REFL PAV MRK TY I (Y)(4") (SLD)	REFL PAV MRK TY I (Y)(4") (BRK)	REFL PAV MRK TY I (Y)(8") (SLD)	REFL PAV MRK TY I (Y)(12") (SLD)	RAIS PAV MRKR CL B (REFL) TY I-A
SHEET NO.	BEGINNING STATION	ENDING STATION	LF	LF	LF	LF	LF	LF	EA	EA	EA	LF	LF	LF	LF	EA
CSJ 0086-14-023																
LOOP 20																
1	382+00.00	392+00.00		190	843											
2	392+00.00	402+00.00	1770	550	380							830				
3	402+00.00	412+00.00	2600	440	1940		44					2890				
4	412+00.00	422+00.00	3999	245	904							3978				
5	422+00.00	433+00.00	4927	450	560	80						4936				
6	433+00.00	443+00.00	2908	410	2378				20		6	2728				
7	443+00.00	453+00.00	2000	790	40							2006				
8	453+00.00	463+00.00	1803	520	625				2		2	1999				
9	463+00.00	473+00.00	2010	510								2010				
10	473+00.00	483+00.00	1740	530	125			250	2		1	2040				
11	483+00.00	493+00.00	2000	500								2000				
12	493+00.00	503+00.00	2646	560	1555			197	26	1	13	2489		35	60	
13	503+00.00	513+00.00	2033	170								2630			170	
14	513+00.00	522+00.00	790									1580				
McPHERSON ROAD																
1	1+79.29	9+75.00	697	260	115		308	100	2			640				
2	9+75.00	18+20.36	640	270	115		372	100	2			650				
GRAND CENTRAL ROAD																
1	0+00.00	15+00.00	870	50				166				830	100		267	
SUBTOTAL CSJ 0086-14-023			33433	6445	9580	80	724	813	54	1	22	34236	100	35	497	0
CSJ 0018-05-057																
UNIROYAL ROAD																
1	10+00.00	15+62.21	780					110				1330				
SUBTOTAL 0018-05-057			780	0	0	0	0	110	0	0	0	1330	0	0	0	0
CSJ 0018-06-131																
IH 35																
1	61+00.00	96+00.00														
2	96+00.00	106+00.00														
3	106+00.00	116+00.00	2010	500	590	217	60					2010				
4	116+00.00	126+00.00	4175	690	1392	115		25				4193			60	11
5	126+00.00	136+00.00	4820	1020	1470			1170	18	3	5	4190				
6	136+00.00	146+00.00	6695	1000	1220	37						6693				
7	146+00.00	156+00.00	6420	1000	1100	30						7400				
8	156+00.00	166+00.00	4835	980	2130	295	8					4835				
9	166+00.00	176+00.00	2103	540	400		52					2127				
10	176+00.00	186+00.00	1000	340								1000				
11	186+00.00	196+00.00	1000	340								1000				
12	196+00.00	206+00.00	1000	340								1000				
13	206+00.00	216+00.00	1000	340								1000				
14	216+00.00	225+00.00	900	300								900				
15	225+00.00	234+00.00	900	300								900				
16	234+00.00	243+00.00														
17	243+00.00	TO END														
SUBTOTAL CSJ 0018-106-131			36858	7690	8302	694	120	1195	18	3	5	37248	0	0	60	11
TOTAL			71071	14135	17882	774	844	2118	72	4	27	72814	100	35	557	11

STATE OF TEXAS
BRUCE J. PRESTON
55387
REGISTERED PROFESSIONAL ENGINEER

The seal appearing on this document was authorized by Bruce J. Preston P.E. 55387, on April 2, 1999.

DATE	BY	REV	REVISION

© 1999 Texas Department of Transportation

Brown & Root
HOUSTON, TEXAS

IH 35/LOOP 20

SUMMARY OF PAVEMENT MARKING QUANTITIES

SHEET 1 OF 2

FED RD DIV NO	STATE PROJECT NO	SHEET NO
6	NH-99(462)	70
STATE	STATE DIST NO	COUNTY
TEXAS	22	WEBB
CONT	SECT	JOB
0018	06	131

04-02-99 BAR_MO FS05 \MCIVIL\CF0039\PHASE2

SUMMARY OF PAVEMENT MARKING QUANTITIES CONTINUED

ITEM NO - DESCRIPTION			672-507	672-509	672-510	678-515	678-517	678-518	678-520	678-521	678-522
LOCATION			RAIS PAV MRKR CL B (REFL) TY I-C	RAIS PAV MRKR CL B (REFL) TY II-A-A	RAIS PAV MRKR CL B (REFL) TY II-C-R	PAV SURF PREP FOR MRK (BLAST CLN) (4 IN)	PAV SURF PREP FOR MRK (BLAST CLN) (8 IN)	PAV SURF PREP FOR MRK (BLAST CLN) (12 IN)	PAV SURF PREP FOR MRK (BLAST CLN) (24 IN)	PAV SURF PREP FOR MRK (BLAST CLN) (ARROW)	PAV SURF PREP FOR MRK (BLAST CLN) (WORD)
SHEET NO.	BEGINNING STATION	ENDING STATION	EA	EA	EA	LF	LF	LF	LF	EA	EA
CSJ 0086-14-023											
LOOP 20											
1	382+00.00	392+00.00			18	190	843	0	0	0	0
2	392+00.00	402+00.00			55	3150	380	0	0	0	0
3	402+00.00	412+00.00			42	5930	1940	44	0	0	0
4	412+00.00	422+00.00			25	8222	904	0	0	0	0
5	422+00.00	433+00.00	20		45	10313	560	80	0	0	0
6	433+00.00	443+00.00			47	6046	2378	0	0	20	6
7	443+00.00	453+00.00			78	4796	40	0	0	0	0
8	453+00.00	463+00.00			52	4322	625	0	0	2	2
9	463+00.00	473+00.00			50	4530	0	0	0	0	0
10	473+00.00	483+00.00			53	4310	125	0	250	2	1
11	483+00.00	493+00.00			50	4500	0	0	0	0	0
12	493+00.00	503+00.00			50	5695	1590	60	197	27	13
13	503+00.00	513+00.00		35	17	4233	0	170	0	0	0
14	513+00.00	522+00.00		40		1580	0	20	0	0	0
McPHERSON ROAD											
1	1+79.29	9+75.00	26	38		1597	115	308	100	2	0
2	9+75.00	18+20.36	26	45		1560	115	372	100	2	0
GRAND CENTRAL ROAD											
1	0+00.00	15+00.00	4	50		1850	0	267	166	0	0
SUBTOTAL CSJ 0086-14-023			76	208	582	72824	9525	1321	813	55	22
CSJ 0018-05-057											
UNIROYAL ROAD											
1	10+00.00	15+62.21		45		2110	0	0	110	0	0
SUBTOTAL 0018-05-057			0	45	0	2110	0	0	110	0	0
CSJ 0018-06-131											
IH 35											
1	61+00.00	96+00.00				0	0	0	0	0	0
2	96+00.00	106+00.00				0	0	0	0	0	0
3	106+00.00	116+00.00	24		50	4520	590	277	0	0	0
4	116+00.00	126+00.00	13		69	9058	1392	175	25	0	0
5	126+00.00	136+00.00			98	10030	1470	0	1170	21	5
6	136+00.00	146+00.00	7		100	14388	1220	37	0	0	0
7	146+00.00	156+00.00	5		100	14820	1100	30	0	0	0
8	156+00.00	166+00.00	34		99	10650	2130	303	0	0	0
9	166+00.00	176+00.00			51	4770	400	52	0	0	0
10	176+00.00	186+00.00			33	2340	0	0	0	0	0
11	186+00.00	196+00.00			33	2340	0	0	0	0	0
12	196+00.00	206+00.00			33	2340	0	0	0	0	0
13	206+00.00	216+00.00			33	2340	0	0	0	0	0
14	216+00.00	225+00.00			30	2100	0	0	0	0	0
15	225+00.00	234+00.00			30	2100	0	0	0	0	0
16	234+00.00	243+00.00				0	0	0	0	0	0
17	243+00.00	TO END				0	0	0	0	0	0
SUBTOTAL CSJ 0018-106-131			83	0	759	81796	8302	874	1195	21	5
TOTAL			159	253	1341	156730	17917	2195	2118	76	27

STATE OF TEXAS
BRUCE J. PRESTON
55387
REGISTERED PROFESSIONAL ENGINEER

The seal appearing on this document was authorized by Bruce J. Preston P.E. 55387, on April 2, 1999.

DATE	BY	REV	REVISION

© 1999 Texas Department of Transportation

Brown & Root
HOUSTON, TEXAS

IH 35/LOOP 20

SUMMARY OF PAVEMENT MARKING QUANTITIES

SHEET 2 OF 2

FED RD DIV NO	STATE PROJECT NO		
6	NH-99(462)		
STATE	STATE DIST NO		COUNTY
TEXAS	22		WEBB
CONT	SECT	JOB	HIGHWAY NO
0018	06	131	IH 35

04-02-99 BAR_HO_ES05 \HOIVL\CF0039\PHASE2

D22C

71

SUMMARY OF TRAFFIC MANAGEMENT QUANTITIES

ITEM NO. - DESCRIPTION			416-506	416-508	540-505	540-506	618-505	618-526	618-527	618-518	618-521	618-542	618-565	618-XXX	620-510	620-512	624-503	624-524	628-XXX	650-510 ,	618-0520
LOCATION			DRILL SHAFT (36 IN)	DRILL SHAFT (48 IN)	TERM ANCH SECT (12 GA)	MTL BM GD FEN (12 GA) (TIM POST)	CONDUIT (RM) (2 IN)	CONDUIT (RM) (2 IN) (PUSH-BORE)	CONDUIT (RM) (3 IN) (PUSH-BORE)	CONDUIT (PVC) (SCHD 80) (2 in)	CONDUIT (PVC) (SCHD 80) (4 IN)	CONDUIT (PVC) (SCHD 80) (4 IN) (BORE)	CONDUIT (HDPEC) (SCH 80) (4 IN w/DUCT)	CONDUIT (HDPEC) (SCH 80) (4 IN w/DUCT) (BORE)	ELEC CONDUCTOR (NO. 6) INSU	ELEC CONDUCTOR (NO. 2) INSU	GROUND BOX (TY C) w/APRON	GROUND BOX (TY 2) w/APRON	ELEC SERV TY C (120/240) 060(NS)GS (N)TP(O)	OVHD SGN. SUPT (30 FT BAL TEE) (21. 0 HT)	CONDUIT PVC 3" SCH 80
SHEET NO.	BEGINNING STATION	ENDING STATION	LF	LF	EA	LF	LF	LF	LF	LF	LF	LF	LF	LF	LF	LF	EA	EA	EA	EA	
LOOP 20 (CSJ 0086-14-023)																					
1	385+00	405+00	1				380		180				790		3210			2	1		
2	405+00	430+00					395		180	1210			2345	190	140			7	1		
3	430+00	455+00	1					60	240	1630			4340	670	3120	3190		16	1		800
4	455+00	476+00	1					300	80	100	50		2200		750			8	1		
5	476+00	495+00	15				200						2630	100	4140			9	1		
6	495+00	518+00					180				140		1640		450			5	1		
SUBTOTAL LP 20 (CSJ 0086-14-023)			18	0	0	0	1155	360	680	2840	190	0	13945	960	11810	3190		47	6		800
IH 35 (CSJ 0018-06-131)																					
7	88+00	108+00	16	52	4	200	220	315		100	600	440	1165	330	6655			8	1	2	
8	108+00	125+00							300	1660			1725		1575			9			360
9	138+00	158+00					260	180	1760				1870	200	270			12			2960
10	158+00	178+00	15	26	2	100	130	500		1220	40	340	2100	325	7290			8	1	1	1800
11	178+00	198+00	1							810			2005		1215			6			
12	198+00	218+00											2035					5			
13	218+00	238+00											2015					6			
14	238+00	261+00	16	26	1	350	150		120	300	140		2140		1290			8	1	1	
SUBTOTAL IH 35 (CSJ 0018-06-131)			48	104	7	650	760	995	2180	4090	780	780	15055	855	18295	0		62	3	3	5120
TOTALS			66	104	7	650	1915	1355	2860	6930	970	780	29000	1815	30105	3190		109	9	3	5920

SEE REVISION

SUMMARY OF TRAFFIC MANAGEMENT QUANTITIES

ITEM NO. - DESCRIPTION			684-507	684-544	5469-501	6519-501	6519-502		8078-501	8076-501	8108 501	8070 501	8100-501	8100-502		8063-502	8067-502	8067-501		8066-501	8101-502	8101-501	8102-501	8080-501	8095-501
LOCATION			TRAF SIG CBL (TY A) (7 CONDR) (12 AWG)	TRAF SIG CBL (TY C) (2 CONDR) (14 AWG)	SINGLE GDRAIL TERM (TY I)	DETECTOR UNIT	DETECTOR CARD RACK		LOOP DETECTOR (SC&C)	CABINET (TY 3)	SYSTEM SUPPORT EQUIP	FTM LANE CONTROL SIGNAL EQUIP	VIDEO FIBER OPTIC TX (S/M)	VIDEO FIBER OPTIC RX (S/M)	COMMUN CABLE (25 PAIR) (22 AWG)	COMMUN CABLE (6 PAIR) (22 AWG)	LIMITED DISTANCE MODEM (STAND ALONE)	LIMITED DISTANCE MODEM (RACK MTD)		VIDEO MULTPLX FIBER OPTIC TRANSM EQUIP	SINGLE MODE FIBER OPTIC (72 FIBER)	SINGLE MODE FIBER OPTIC (DROP CBL)	(LCU) LOCAL CONTROL UNIT	FIBER OPTIC TRAN-SCEIVERS	D/I MULDEMS
SHEET NO.	BEGINNING STATION	ENDING STATION	LF	LF	EA	EA	EA		EA	EA	LS	EA	EA	EA	LF	LF	EA	EA		EA	LF	EA	EA	EA	EA
LOOP 20 (CSJ 0086-14-023)																									
1	385+00	405+00	2610	2190		6	1		12	1		7	1			955	2	1			1185		2	2	0
2	405+00	430+00		6030		3	1		6									1			2535		1	2	1
3	430+00	455+00											1	6	0	850	1	1		2	4630	850		6	4
4	455+00	476+00		1760		4	1		8	1			1			1470	2				2200	760	1		
5	476+00	495+00														4615		1			2445	2170		2	1
6	495+00	518+00														1720	1								
SUBTOTAL LP 20 (CSJ 0086-14-023)			2610	9980	0	13	3		26	2	0	7	3	6	0	9610	6	4		2	12845	3780	4	12	6
IH 35 (CSJ 0018-06-131)																									
7	88+00	108+00			4								1			2105	3	1			625	70		2	1
8	108+00	125+00	920	6780		6	1		12	1		2				525	1				1725		1		
9	138+00	158+00	1550	10280		4	1		8	1		3				90	1				2070		1		
10	158+00	178+00	390	1890	2	3	1		6			3				2565	1	1			4920	840	1	2	1
11	178+00	198+00											1			405	1				2005	405			
12	198+00	218+00																			2035				
13	218+00	238+00																			2015				
14	238+00	261+00			1								1			390	2	1			2140	250	1	1	1
SUBTOTAL IH 35 (CSJ 0018-06-131)			2860	18950	7	13	3		26	2	1	8	3	0	0	6080	9	3		0	17535	1565	3	5	3
TOTALS			5470	28930	7	26	6		48	4	1	15	6	6	0	15690	15	7		2	30380	5345	7	17	9

STATE OF TEXAS
CHARLES M. SHINE
62999
REGISTERED PROFESSIONAL ENGINEER

The seal appearing on this document was authorized by Charles Shine P.E. 62999 on June 30, 1999.

DATE	BY	REV	REVISION
6-3-99	CS	1	QUANTITIES

© 1999 Texas Department of Transportation

Brown & Root
HOUSTON, TEXAS

IH 35/LOOP 20

SUMMARY OF TRAFFIC MANAGEMENT QUANTITIES

REV. 6-25-99

SHEET 1 OF 2

FED RD DIV NO	STATE PROJECT NO	SHEET NO
6	NH-99(462)	72

STATE	STATE DIST NO	COUNTY
TEXAS	22	WEBB

CONT	SECT	JOB	HIGHWAY NO
0018	06	131	IH 35

3500SX01.DGN-07 06-14-99 BAR_HO_ES05 \HCIVIL\CF0039\PHASE2

SUMMARY OF TRAFFIC MANAGEMENT QUANTITIES

ITEM NO. - DESCRIPTION			416-506	416-508	416-509	416-512	540-505	540-506	618-505	618-526	618-527	618-518	618-521	618-542	618-565	618-XXX	620-510	620-512	624-503	624-524	628-XXX
LOCATION			DRILL SHAFT (36 IN)	DRILL SHAFT (48 IN)	DRILL SHAFT (54 IN)	DRILL SHAFT (72 IN)	TERM ANCH SECT (12 GA)	MTL BM GD FEN (12 GA) (TIM POST)	CONDUIT (RM) (2 IN)	CONDUIT (RM) (2 IN) (PUSH-BORE)	CONDUIT (RM) (3 IN) (PUSH-BORE)	CONDUIT (PVC) (SCHD 80) (2 in)	CONDUIT (PVC) (SCHD 80) (4 IN)	CONDUIT (PVC) (SCHD 80) (4 IN) (BORE)	CONDUIT (HDPEC) (SCH 80) (4 IN w/DUCT)	CONDUIT (HDPEC) (SCH 80) (4 IN W/DUCT) (BORE)	ELEC CONDUCTOR (NO. 6) INSU	ELEC CONDUCTOR (NO. 2) INSU	GROUND BOX (TY C) w/APRON	GROUND BOX (TY 2) w/APRON	ELEC SERV TY C (120/240) 060(NS)GS (N)TP(O)
SHEET NO.	BEGINNING STATION	ENDING STATION	LF	LF	LF	LF	EA	LF	LF	LF	LF	LF	LF	LF	LF	LF	LF	LF	EA	EA	EA
LOOP 20 (CSJ 0086-14-023)																					
1	395+00	405+00							380		180				790		3210			2	✳1
2	405+00	430+00							395		180	1210			2345	190	140			7	1
3	430+00	455+00				25				60	240	1630			4340	670	3120	3190		16	1
4	455+00	476+00	15							300	80	100	50		2200		750			8	2 1
5	476+00	495+00							200						2630	100	4140			9	1
6	495+00	518+00		26					180				140		1640		450			5	1
SUBTOTAL LP 20 (CSJ 0086-14-023)			15	26		25	0	0	1155	360	680	2840	190	0	13945	960	11810	3190		47	✳✳6
IH 35 (CSJ 0018-06-131)																					
7	88+00	108+00	15		44		4	200	220	315		100	600	440	1165	330	6655			8	1
8	108+00	125+00									300	1660			1725		1575			9	
9	138+00	158+00							260	180	1760				1870	200	270			12	
10	158+00	178+00			22		2	100	130	500		1220	40	340	2100	325	7290			8	1
11	178+00	198+00	15									810			2005		1215			6	
12	198+00	218+00													2035					5	
13	218+00	238+00													2015					6	
14	238+00	261+00	15	26			1	350	150		120	300	140		2140		1290			8	1
SUBTOTAL IH 35 (CSJ 0018-06-131)			45	26	66		7	650	760	995	2180	4090	780	780	15055	855	18295	0		62	✳✳3
TOTALS			**60**	**52**	**66**	**25**	**7**	**650**	**1915**	**1355**	**2860**	**6930**	**970**	**780**	**29000**	**1815**	**30105**	**3190**		**109**	✳✳9

2

✳ EXIST SERVICE POLE

✳✳ REFER TO TxDOT ELECTRICAL DETAILS

SUMMARY OF TRAFFIC MANAGEMENT QUANTITIES

ITEM NO. - DESCRIPTION			650-510	618-0520	684-507	684-544	5469-501	6519-501	6519-502	6519-503	6574-501	6577-502	6034-501	6842-501	6035-501	6035-502	6733-501	6733-502	6042-501	6042-502	6151-501	6039-501	6051-501	6841-501
LOCATION			OVHD SGN SUPT (30 FT BAL TEE) (21. 0 HT)	CONDUIT PVC 3" SCH 80	TRAF SIG CBL (TY A) (7 CONDR) (12 AWG)	TRAF SIG CBL (TY C) (2 CONDR) (14 AWG)	SINGLE GDRAIL TERM (TY I)	DETECTOR UNIT	DETECTOR CARD RACK	POWER SUPPLY	LOOP DETECTOR (SC&C)	CABINET (TY 3)	SYSTEM SUPPORT EQUIP	FTM LANE CONTROL SIGNAL EQUIP	VIDEO FIBER OPTIC TX (S/M)	VIDEO FIBER OPTIC RX (S/M)	COMMUN CABLE (25 PAIR) (22 AWG)	COMMUN CABLE (6 PAIR) (22 AWG)	LIMITED DISTANCE MODEM (STAND ALONE)	LIMITED DISTANCE MODEM (RACK MTD)	RACK MOUNT ELECT EQUIP CAB	VIDEO MULTPLX FIBER OPTIC TRANSM EQUIP	SINGLE MODE FIBER OPTIC (72 FIBER)	SINGLE MODE FIBER OPTIC (DROP CBL)
SHEET NO.	BEGINNING STATION	ENDING STATION	EA		LF	LF	EA	EA	EA	EA	EA	EA	LS	EA	EA	EA	LF	LF	EA	EA	EA	EA	LF	EA
LOOP 20 (CSJ 0086-14-023)																								
1	395+00	405+00			2610	2190		6	1	1	12	1		7	1			955	2	1			1185	
2	405+00	430+00				6030		3	1	1	6									1			2535	
3	430+00	455+00		800											1	6	0	850	1	1	3	2	4630	850
4	455+00	476+00				1760		4	1	1	8	1			1			1470	2				2200	760
5	476+00	495+00																4615		1			2445	2170
6	495+00	518+00																1720	1					
SUBTOTAL LP 20 (CSJ 0086-14-023)				800	2610	9980	0	13	3	3	26	2	0	7	3	6	0	9610	6	4	3	2	12845	3780
IH 35 (CSJ 0018-06-131)																								
7	88+00	108+00	2				4								1			2105	3	1			625	70
8	108+00	125+00		360	920	6780		6	1	1	12	1		2				525	1				1725	
9	138+00	158+00		2960	1550	10280		4	1	1	8	1		3				90	1				2070	
10	158+00	178+00	1	1800	390	1890	2	3	1	1	6			3				2565	1	1			4920	840
11	178+00	198+00													1			405	1				2005	405
12	198+00	218+00																					2035	
13	218+00	238+00																					2015	
14	238+00	261+00	1				1								1			390	2	1			2140	250
SUBTOTAL IH 35 (CSJ 0018-06-131)			3	5120	2860	18950	7	13	3	3	26	2	1	8	3	0	0	6080	9	3	0	0	17535	1565
TOTALS			**3**	**5920**	**5470**	**28930**	**7**	**26**	**6**	**6**	**48**	**4**	**1**	**15**	**6**	**6**	**0**	**15690**	**15**	**7**	**3**	**2**	**30380**	**5345**

DATE	BY	REV	REVISION
6-3-99	CS	1	QUANTITIES
8-24-99	DS	2	ADDED NOTES

© 1999 Texas Department of Transportation

Brown & Root
HOUSTON, TEXAS

IH 35/LOOP 20

SUMMARY OF TRAFFIC MANAGEMENT QUANTITIES

SHEET 1 OF 2

FED RD DIV NO	STATE PROJECT NO	SHEET NO
6	NH-99(462)	72

STATE	STATE DIST NO	COUNTY
TEXAS	22	WEBB

CONT	SECT	JOB	HIGHWAY NO
0018	06	131	IH 35

D50QSX01.DGN-08 08-24-00 BAR_HO_ES05 \HCIVIL\CF0039\PHASE2

SUMMARY OF TRAFFIC MANAGEMENT QUANTITIES

ITEM NO. - DESCRIPTION			416-506	416-508	416-509	416-512	540-505	540-506	618-505	618-526	618-527	618-518	618-521	618-542	618-565	618-XXX	620-510	620-512	624-503	624-524	628-XXX
LOCATION			DRILL SHAFT (36 IN)	DRILL SHAFT (48 IN)	DRILL SHAFT (54 IN)	DRILL SHAFT (72 IN)	TERM ANCH SECT (12 GA)	MTL BM GD FEN (12 GA) (TIM POST)	CONDUIT (RM) (2 IN)	CONDUIT (RM) (2 IN) (PUSH-BORE)	CONDUIT (RM) (3 IN) (PUSH-BORE)	CONDUIT (PVC) (SCHD 80) (2 in)	CONDUIT (PVC) (SCHD 80) (4 IN)	CONDUIT (PVC) (SCHD 80) (4 IN) (BORE)	CONDUIT (HDPEC) (SCH 80) (4 IN w/DUCT)	CONDUIT (HDPEC) (SCH 80) (4 IN W/DUCT) (BORE)	ELEC CONDUCTOR (NO. 6) INSU	ELEC CONDUCTOR (NO. 2) INSU	GROUND BOX (TY C) w/APRON	GROUND BOX (TY 2) w/APRON	ELEC SERV TY D (120/240) 060(NS)GS (N)TP(O)
SHEET NO.	BEGINNING STATION	ENDING STATION	LF	LF	LF	LF	EA	LF	LF	LF	LF	LF	LF	LF	LF	LF	LF	LF	EA	EA	EA
LOOP 20 (CSJ 0086-14-023)																					
1	395+00	405+00							540		180				790		3210			2	* 1
2	405+00	430+00							380		180	1210			2315	190	140			9	1
3	430+00	455+00				25				60	240	1630			4340	670	3120	3640		16	1
4	455+00	476+00	15						100	6	80	600 6	6		2290		750			8	1
5	476+00	495+00													2335	100				9	
6	495+00	518+00		26				150 6	120 6			170	200		1490 6	280	1010			7	1
SUBTOTAL LP 20 (CSJ 0086-14-023)			15	26		25		150 6	1140 6	60 6	680	3610 6	200 6		13560 6	1240	8230	3640		51	5
IH 35 (CSJ 0018-06-131)																					
7	88+00	108+00	15		44		4	300 6	40	560		1785	420	230	1525	330	7525		2 6	10	1
8	108+00	125+00									300	2165			1725		1575			9	
9	138+00	158+00							260	180	1000 6				1870	200	270			12	
10	158+00	178+00					2	100	156	496		3040			1760	145	3939			8	1
11	178+00	198+00			22		2	500	44	82		3980	180		1900		459		1 6	7	1
12	198+00	218+00	15				2	150 6	50		102	700			1886	102	1138			7	1
13	218+00	238+00													2015					6	
14	238+00	261+00	15	26			1	150 6	40	60		1200	180	60	2700		2670		1 6	8	1
14A	261+00	283+00										3200 6			1600 6		4800 6			4	
SUBTOTAL IH 35 (CSJ 0018-06-131)			45	26	66		11	1200 6	590	1378	1402 6	16070 6	780	290	16981 6	777	22376 6		4 6	71	* * 5
TOTALS			**60**	**52**	**66**	**25**	**11**	**1350 6**	**1730 6**	**1438 6**	**2082 6**	**19680 6**	**980 6**	**290**	**30541 6**	**2017**	**30606 6**	**3640**	**4 6**	**122**	* * **10**

* EXIST SERVICE POLE

* * REFER TO TxDOT ELECTRICAL DETAILS

SUMMARY OF TRAFFIC MANAGEMENT QUANTITIES

ITEM NO. - DESCRIPTION			650-510	618-0520	684-507	684-544	5469-501	6519-501	6519-502	6519-503	6574-501	6577-502	6034-501	6842-501	6035-501	6035-502	6733-501	6733-502	6042-501	6042-502	6151-501	6039-501	6051-501	6841-501
LOCATION			OVHD SGN SUPT (30 FT BAL TEE) (21. 0 HT)	CONDUIT PVC 3" SCH 80	TRAF SIG CBL (TY A) (7 CONDR) (12 AWG)	TRAF SIG CBL (TY C) (2 CONDR) (12 AWG)	SINGLE GDRAIL TERM (TY I)	DETECTOR UNIT	DETECTOR CARD RACK	POWER SUPPLY	LOOP DETECTOR (SC&C)	CABINET (TY 3)	SYSTEM SUPPORT EQUIP	FTM LANE CONTROL SIGNAL EQUIP	VIDEO FIBER OPTIC TX (S/M)	VIDEO FIBER OPTIC RX (S/M)	COMMUN CABLE (25 PAIR) (22 AWG)	COMMUN CABLE (6 PAIR) (22 AWG)	LIMITED DISTANCE MODEM (STAND ALONE)	LIMITED DISTANCE MODEM (RACK MTD)	RACK MOUNT ELECT EQUIP CAB	VIDEO MULTPLX FIBER OPTIC TRANSM EQUIP	SINGLE MODE FIBER OPTIC (72 FIBER)	SINGLE MODE FIBER OPTIC (DROP CBL)
SHEET NO.	BEGINNING STATION	ENDING STATION	EA		LF	LF	EA	EA	EA	EA	EA	EA	LS	EA	EA	EA	LF	LF	EA	EA	EA	EA	LF	EA
LOOP 20 (CSJ 0086-14-023)																								
1	395+00	405+00			2610	2190		6	2	2	12	1		12	1			955	2	1			1185	
2	405+00	430+00				6030		3	1	1	6									1			2535	
3	430+00	455+00		500											1	6		850	1	1	3	2	4630	850
4	455+00	476+00		500 6		1760		4	1	1	8	1			1			1470	2				2190	760
5	476+00	495+00																4870					2435	2435
6	495+00	518+00																3470	1	1			1650	1650
SUBTOTAL LP 20 (CSJ 0086-14-023)				1000 6	2610	9980		13	4	4	26	2		12	3	6		11615	6	4	3	2	14625	5695
IH 35 (CSJ 0018-06-131)																								
7	88+00	108+00	2				4								1			2455	3	1			625	70
8	108+00	125+00		360	920	6980		6	1	1	12	1		2				525	1				1725	
9	138+00	158+00		3720	1550	10280		4	1	1	8	1		3				90	1				2070	
10	158+00	178+00	1	612	378	1836	2	3	1	1	6	1		3				2871	1				1905	
11	178+00	198+00					2											5205	1				1900	
12	198+00	218+00					2								1			814	1	1			2018	316
13	218+00	238+00																					2015	
14	238+00	261+00	1				1											890	1	1			2140	700
14A	261+00	283+00													1			1600 6	1					1600 6
SUBTOTAL IH 35 (CSJ 0018-06-131)			4	4692	2848	19096	11	13	3	3	26	3	1	8	3			14450 6	10	3			14398	2686 6
TOTALS			**4**	**5692 6**	**5458**	**29076**	**11**	**26**	**7**	**7**	**52**	**5**	**1**	**20**	**6**	**6**	**0**	**26065 6**	**16**	**7**	**3**	**2**	**29023**	**8381 6**

DATE	BY	REV	REVISION
1-15-02	FS	5	REVISED QUANTITIES
3-01-02	DM	6	REVISED QUANTITIES
9-29-00	DS	3	REVISED SERVICE TYPE

© 1999 Texas Department of Transportation

Brown & Root
HOUSTON, TEXAS

IH 35/LOOP 20

SUMMARY OF TRAFFIC MANAGEMENT QUANTITIES

SHEET 1 OF 2

FED RD DIV NO	STATE PROJECT NO	SHEET NO
6	NH-99(462)	72

STATE	STATE DIST NO	COUNTY
TEXAS	22	WEBB

CONT	SECT	JOB	HIGHWAY NO
0018	06	131	IH 35

D500SX01.DGN-09 08-24-00 RARHO*FS05 \HCIV11\CF0039\PHASE2

SUMMARY OF TRAFFIC MANAGEMENT QUANTITIES

ITEM NO. - DESCRIPTION			416-506	416-508	416-509	650-604	656-XXX	540-505	540-506	618-505	618-526	618-527	618-518	618-521	618-542	618-565	618-587	620-510	620-512	624-503	624-524	628-698	628-835
LOCATION			DRILL SHAFT (36 IN)	DRILL SHAFT (48 IN)	DRILL SHAFT (54 IN)	OVHD SGN SUPT (40 FT CANT) (21.0 HT)	HUB BUILDING FOUNDATION	TERM ANCH SECT (12 GA)	MTL BM GD FEN (12 GA) (TIM POST)	CONDUIT (RM) (2 IN)	CONDUIT (RM) (2 IN) (PUSH-BORE)	CONDUIT (RM) (3 IN) (PUSH-BORE)	CONDUIT (PVC) (SCHD 80) (2 in)	CONDUIT (PVC) (SCHD 80) (4 IN)	CONDUIT (PVC) (SCHD 80) (4 IN) (BORE)	CONDUIT (HDPEC) (SCH 80) (4 IN w/DUCT)	CONDUIT (HDPEC) (SCH 80) (4 IN W/DUCT) (BORE)	ELEC CONDUCTOR (NO. 6) INSU	ELEC CONDUCTOR (NO. 2) INSU	GROUND BOX (TY C) w/APRON	GROUND BOX (TY 2) w/APRON	ELEC SERV TY D (120/240) 060(NS)GS (N)TP(O)	ELEC SERV TY D (120/240) 100(NS)GS (N)TP(O)
SHEET NO.	BEGINNING STATION	ENDING STATION	LF	LF	LF	EA	EA	EA	LF	LF	LF	LF	LF	LF	LF	LF	LF	LF	LF	EA	EA	EA	EA
LOOP 20 (CSJ 0086-14-023)																							
1	395+00	405+00								540		390				790		2115			2		* 1
2	405+00	430+00					1			380		180	1210			2315	190	140			10	1	
3	430+00	455+00	15								296	60	1522			4340	490		3640		17		1
4	455+00	476+00	15							100		80	600			2290		750			8	1	
5	476+00	495+00														2335	100				9		
6	495+00	518+00		26			1	1	150	120			170	200		1490	280	1240			7	2	
SUBTOTAL LP 20 (CSJ 0086-14-023)			30	26			2	1	150	1140	296	710	3502	200		13560	1060	4245	3640		53	4	1
IH 35 (CSJ 0018-06-131)																							
7	88+00	108+00	15		44	2	1	2	300		800		2245	420	230	1525	330	7865		2	10	2	1
8	108+00	125+00										300	2165			1725		1575			9		
9	138+00	158+00								200	180	1000				1870	200	270			12		
10	158+00	178+00						2	100	156	496		3040			1760	145	3939			8	1	
11	178+00	198+00			22	1		2	500	44	82		690	180		1900		612		1	7	1	
12	198+00	218+00	15				1	3	150	50		102	320			1886	102	868			7	1	
13	218+00	238+00														2015					6		
14	238+00	261+00					1	1	150	80		120	1250	180		2336	464	2640		1	8	2	
14A	261+00	283+00	15										3200			1600		4800			3		
SUBTOTAL IH 35 (CSJ 0018-06-131)			45		66	3	3	10	1200	530	1558	1522	12910	780	230	16617	1241	22569		4	70	* * 7	* * 1
TOTALS			75	26	66	3	5	11	1350	1670	1854	2232	16412	980	230	30177	2301	26814	3640	4	123	* * 11	* * 2

10 10 10 10 10

* EXIST SERVICE POLE

* * REFER TO ELECTRICAL POLE SUMMARY SHEET

* * * NOTE:

TOTAL QUANTITIES INCLUDE 25 FEET OF SLACK PER GROUND BOX

SUMMARY OF TRAFFIC MANAGEMENT QUANTITIES

ITEM NO. - DESCRIPTION			650-510	618-0520	684-507	684-544	5469-501	6519-501	6519-502	6519-503	8078-501	8076-501	8108-501	8070-501	8100-501	8100-502	8063-501	8067-502	8067-501	6224-501	8066-501	8101-502	8101-501
LOCATION			OVHD SGN SUPT (30 FT BAL TEE) (21.0 HT)	CONDUIT PVC 3" SCH 80	TRAF SIG CBL (TY A) (7 CONDR) (12 AWG)	TRAF SIG CBL (TY C) (2 CONDR) (12 AWG)	SINGLE GDRAIL TERM (TY I)	DETECTOR UNIT	DETECTOR CARD RACK	POWER SUPPLY	LOOP DETECTOR (SC&C)	CABINET (TY 3)	SYSTEM SUPPORT EQUIP	FTM LANE CONTROL SIGNAL EQUIP	VIDEO FIBER OPTIC TX (S/M)	VIDEO FIBER OPTIC RX (S/M)	COMMUN CABLE (6 PAIR) (22 AWG)	LIMITED DISTANCE MODEM (STAND ALONE)	LIMITED DISTANCE MODEM (RACK MTD)	RACK MOUNT ELECT EQUIP CAB	VIDEO MULTPLX FIBER OPTIC TRANSM EQUIP	SINGLE MODE FIBER OPTIC (72 FIBER)	SINGLE MODE FIBER OPTIC (DROP CBL)
SHEET NO.	BEGINNING STATION	ENDING STATION	EA		LF	LF	EA	EA	EA	EA	EA	EA	LS	EA	EA	EA	LF	EA	EA	EA	EA	LF	EA
LOOP 20 (CSJ 0086-14-023)																							
1	395+00	405+00		180	2610	1600		4	1	1		1		9			955	1				1185	
2	405+00	430+00				6030		3	1	1	6								1			2535	
3	430+00	455+00		100											1	6			2	3	2	4630	
4	455+00	476+00		500		1760		4	1	1	8	1			1		1470	2				2190	760
5	476+00	495+00															4870					2435	2435
6	495+00	518+00	1				1										3470	1	1			1650	1650
SUBTOTAL LP 20 (CSJ 0086-14-023)			1	780	2610	9390	1	11	3	3	14	2		9	2	6	10765	4	4	3	2	14625	4845
IH 35 (CSJ 0018-06-131)																							
7	88+00	108+00					2								1		2455	3	1			625	70
8	108+00	125+00		360	920	6980		6	1	1	12	1		2			525	1				1725	
9	138+00	158+00		3720	1370	10280		4	1	1	8	1		1			90	1				2070	
10	158+00	178+00		612	378	1836	2	3	1	1	6	1		3			2871	1				1905	
11	178+00	198+00					2										5205	1				1900	
12	198+00	218+00					3								1		724	1	1			2018	226
13	218+00	238+00																				2015	
14	238+00	261+00					1										850	1	1			2300	700
14A	261+00	283+00													1		1600	1					1600
SUBTOTAL IH 35 (CSJ 0018-06-131)				4692	2668	19096	10	13	3	3	26	3	1	6	3		14320	10	3			14558	2596
TOTALS			1	5472	5278	28486	11	24	6	6	40	5	1	15	5	6	25085	14	7	3	2	*** 31933	*** 8091

10 10 10 10

DATE	BY	REV	REVISION
11-20-02	DS	8	REVISED QUANTITIES
12-04-02	DM	9	REVISED QUANTITIES
06-27-03	JNR	10	REVISED QUANTITIES

©1999

Texas Department of Transportation

Brown & Root

HOUSTON, TEXAS

IH 35/LOOP 20

SUMMARY OF TRAFFIC MANAGEMENT QUANTITIES

SHEET 1 OF 2

FED RD DIV NO	STATE PROJECT NO		SHEET NO
6	NH-99(462)		72
STATE	STATE DIST NO	COUNTY	
TEXAS	22	WEBB	
CONT	SECT	JOB	HIGHWAY NO
0018	06	131	IH 35

DGN:SCV01DGN1-12 11-20-02 RAB HD ESOS \APWIN\ESOS\01PHASE2

ELECTRICAL SERVICE POLE SUMMARY

SERVICE POLE NUMBER	SHEET NUMBER	STATION NUMBER	ELECTRICAL SERVICE DESCRIPTION FOR ALL SERVICES (SEE ED(5)-00)	SERVICE CONDUIT SIZE (RMC)	SERVICE CONDUCTORS NO./SIZE	SAFETY SWITCH AMPS	SWITCH AMP/FUSES	CKT. BRK. POLE/AMP	TWO-POLE CONTACTOR AMPS	PANELBD./ LOADCENTER AMP RATING (MIN)	CIRCUIT NUMBER	BRANCH CKT. BRK. POLE/AMPS	KVA LOAD
PP1 EX	1	395+40	TYD(120/240)060(NS)GS(N)TP(O)	EX	EX	EX	N/A	EX	EX	EX	4	1P/20	2.4
PP2	2	425+00	TYD(120/240)060(NS)GS(N)TP(O)	1-1/2"	3/#4	N/A	N/A	2/P/60	N/A	60	1	2P/50	12.0
PP3	3	431+00 2	TYD(120/240)100(NS)GS(N)TP(O)	1-1/2"	3/#4	N/A	N/A 2	2/P/100	N/A	2 100	1	1P/20	2.4
											2	2P/50	12.0
PP4	4	470+50	TYD(120/240)060(NS)GS(N)TP(O)	1-1/2"	3/#4	N/A	N/A	2/P/60	N/A	60	1	1P/20	2.4
											2	2P/50	12.0
PP9	6	511+80	TYD(120/240)060(NS)GS(N)TP(O)	1-1/2"	3/#4	N/A	N/A	2/P/60	N/A	60	1	2P/50	12.0
											2	1P/20	2.4
PP6	7	100+00	TYD(120/240)100(NS)GS(N)TP(O)	1-1/2"	3/#4	N/A	N/A	2/P/100	N/A	100	1	2P/50	12.0
											2	1P/20	2.4
											3	1P/20	2.4
											4	1P/20	2.4
											5	1P/20	2.4
PP7	11	184+90	TYD(120/240)60(NS)GS(N)TP(O)	1-1/2"	3/#4	N/A	N/A	2/P/60	N/A	60	1	1P/20	2.4
PP8	14	259+10	TYD(120/240)060(NS)GS(N)TP(O)	1-1/2"	3/#4	N/A	N/A	2/P/60	N/A	60	1	2P/50	12.0
											2	1P/20	2.4
											3	1P/20	2.4
PP11	12	198+54	TYD(120/240)060(NS)GS(N)TP(O)	1-1/2"	3/#4	N/A	N/A	2/P/60	N/A	60	1	2P/50	12.0
											2	1P/20	2.4
PP10	10	167+65	TYD(120/240)060(NS)GS(N)TP(O)	1-1/2"	3/#4	N/A	N/A	2/P/60	N/A	60	1	1P/20	2.4
											2	1P/20	2.4

STATE OF TEXAS
DANIEL SAUCEDO
45787
REGISTERED
PROFESSIONAL ENGINEER

The seal appearing on this document was authorized by DANIEL SAUCEDO, P.E. 45787, on march 4, 2002.

Daniel Saucedo

DATE	BY	REV	REVISION
3-4-02	DS	2	REVISED CKT. BRK. POLE/AMP
2/21/02	DS	1	REVISED CKT. BRK. POLE/AMP

© 2002 Texas Department of Transportation

IH 35/LOOP 20

ELECTRICAL SERVICE POLE SUMMARY

SHEET 1 OF 1

FED RD DIV NO	STATE PROJECT NO		SHEET NO
6	NH-99(462)		
STATE	STATE DIST NO	COUNTY	
TEXAS	22	WEBB	
CONT	SECT	JOB	HIGHWAY NO
0018	06	131	IH 35

elec serv sum.DGN-01 02-25-02

SUMMARY OF TRAFFIC MANAGEMENT QUANTITIES

ITEM NO. - DESCRIPTION			8068 -501	8077 -501	8079 -501	8099-501	8039 -501	8069-501	8071-502	8071-501
LOCATION			CCTV FIELD EQUIP	VOICE COMM EQUIP	COMMUN HUB (6' x 8')	ENVIRON CONTR COMM HUB (12'X12')	FIBER OPTIC DMS FIELD EQUIP (18 IN)	CCTV CENTRAL EQUIP	CAMERA POLE STRUCT (40 FT)	CAMERA POLE STRUCT (50 FT)
SHEET NO.	BEGINNING STATION	ENDING STATION								
			EA	EA	EA	EA	EA	EA	EA	EA
LOOP 20 (CSJ 0086-14-023)										
1	385+00	405+00								
2	405+00	430+00		1	1					
3	430+00	455+00	2	3		1		2	1	
4	455+00	476+00	1							1
5	476+00	495+00		1	1					
6	495+00	518+00					1			
SUBTOTAL LOOP 20 (CSJ 0086-14-023)			3	5	2	1	1	2	1	1
IH 35 (CSJ 0018-06-131)										
7	88+00	108+00	1	1	1		2			1
8	108+00	125+00								
9	138+00	158+00								
10	158+00	178+00		1	1		1			
11	178+00	198+00	1							1
12	198+00	218+00								
13	218+00	238+00								
14	238+00	261+00	1	1	1		1			1
SUBTOTAL IH 35 (CSJ 0018-06-131)			3	3	3	0	4		0	3
TOTALS			6	8	5	1	5	2	1	4

REV. 6-25-99

STATE OF TEXAS
CHARLES M. SHINE
62999
REGISTERED PROFESSIONAL ENGINEER

The seal appearing on this document was authorized by Charles Shine P.E. 62999, on June 21, 1999.

DATE	BY	REV	REVISION
6-21-99	CS	1	QUANTITIES

© 1999 Texas Department of Transportation

Brown & Root
HOUSTON, TEXAS

IH 35/LOOP 20

SUMMARY OF TRAFFIC MANAGEMENT QUANTITIES

SHEET 2 OF 2

FED RD DIV NO	STATE PROJECT NO		SHEET NO
6	NH-99(462)		73
STATE	STATE DIST NO		COUNTY
TEXAS	22		WEBB
CONT	SECT	JOB	HIGHWAY NO
0018	06	131	IH 35

D50OSX02.DGN-08 06-21-99 BAR_HO_ES05 \HCIVIL\CF0039\PHASE2

SUMMARY OF TRAFFIC MANAGEMENT QUANTITIES

ITEM NO. - DESCRIPTION			6046-501	6052-501	6032-501	6028-501	6038-501	6881-501	6881-XXX	6936-501	8069-	8071-	8071-	XXXX-XXXX
LOCATION			(LCU) LOCAL CONTROL UNIT	FIBER OPTIC TRAN-SCEIVERS	D/I MULDEMS	CCTV FIELD EQUIP	VOICE COMM EQUIP	COMMUN HUB (6' x 8')	ENVIRON CONTR COMM HUB (12'X12')	FIBER OPTIC DMS FIELD EQUIP (18 IN)	CCTV CENTRAL EQUIP	CAMERA POLE STRUCT (40 FT)	CAMERA POLE STRUCT (50 FT)	COAX CABLE RG59
SHEET NO.	BEGINNING STATION	ENDING STATION	EA	EA	EA	EA	EA	EA	EA	EA	EA	EA	EA	LF
LOOP 20 (CSJ 0086-14-023)														
1	385+00	405+00	2	2			1 △4							
2	405+00	430+00	1	2	1		1	1						
3	430+00	455+00		6	4	2	2 △4		1		2	1		1060
4	455+00	476+00	1			1	2 △4						1	
5	476+00	495+00												
6	495+00	518+00		2	1		2	1		1				
SUBTOTAL LOOP 20 (CSJ 0086-14-023)			4	12	6	3	8 △4	2	1	1	2	1	1	1060
IH 35 (CSJ 0018-06-131)														
7	88+00	108+00		2	1	1	4	1		2			1	
8	108+00	125+00	1				1							
9	138+00	158+00	1				1							
10	158+00	178+00	1				1							
11	178+00	198+00					1			1				
12	198+00	218+00		2	1	1	2 △4	1					1	
13	218+00	238+00												
14	238+00	261+00		1	1		2	1		1				
14A	261+00	283+00				1	1 △4						1	
SUBTOTAL IH 35 (CSJ 0018-06-131)			3	5	3	3	13 △4	3		4			3	
TOTALS			**7**	**17**	**9**	**6**	**21** △4	**5**	**1**	**5**	**2**	**1**	**4**	**1060**

DATE	BY	REV	REVISION
3-1-02	DM	4	REVISED QUANTITIES
6-14-01	DS	2	REVISED QUANTITIES
1-15-02	FS	3	REVISED QUANTITIES

© 1999 Texas Department of Transportation

Brown & Root
HOUSTON, TEXAS

IH 35/LOOP 20

SUMMARY OF TRAFFIC MANAGEMENT QUANTITIES

SHEET 2 OF 2

FED RD DIV NO	STATE PROJECT NO		SHEET NO
6	NH-99(462)		73
STATE	STATE DIST NO	COUNTY	
TEXAS	22	WEBB	
CONT	SECT	JOB	HIGHWAY NO
0018	06	131	IH 35

D500SX02.DGN-10 06-30-99 BAR*HO*FS05 \HCIVI1\CF0039\PHASF2

SUMMARY OF TRAFFIC MANAGEMENT QUANTITIES 6

ITEM NO. - DESCRIPTION			8102-501	8080-501	8093-501	8068-501	8077-501	8079-501	8099-501	8039-501	8098-501	8069-501	8071-502	8071-501	8040-501
LOCATION			(LCU) LOCAL CONTROL UNIT	FIBER OPTIC TRAN-SCEIVERS	D/I MULDEMS	CCTV FIELD EQUIP	VOICE COMM EQUIP	COMMUN HUB (6' x 8')	ENVIRON CONTR COMM HUB (12'X12')	FIBER OPTIC DMS FIELD EQUIP (18 IN)	RELOCATE DMS FIELD EQUIP (18 IN)	CCTV CENTRAL EQUIP	CAMERA POLE STRUCT (40 FT)	CAMERA POLE STRUCT (50 FT)	COAX CABLE RG59
SHEET NO.	BEGINNING STATION	ENDING STATION	EA	EA	EA	EA	EA	EA	EA	EA	EA	EA	EA	EA	LF
LOOP 20 (CSJ 0086-14-023)															
1	385+00	405+00	1				1								
2	405+00	430+00	1	2	1		1	1							
3	430+00	455+00		6	4	1	3		1			2	1		2116
4	455+00	476+00	1			1	2							1	
5	476+00	495+00													
6	495+00	518+00		2	1		2	1		1					
SUBTOTAL LOOP 20 (CSJ 0086-14-023)			3	10	6	2	9	2	1	1		2	1	1	2116
IH 35 (CSJ 0018-06-131)															
7	88+00	108+00		2	1	1	4	1		2				1	
8	108+00	125+00	1				1								
9	138+00	158+00	1				1								
10	158+00	178+00	1				1								
11	178+00	198+00					1			1					
12	198+00	218+00		2	1	1	2	1						1	
13	218+00	238+00													
14	238+00	261+00		1	1		2	1		0	1				
14A	261+00	283+00				1	1							1	
SUBTOTAL IH 35 (CSJ 0018-06-131)			3	5	3	3	13	3		3	1			3	
TOTALS			**6**	**15**	**9**	**5** 6	**22**	**5**	**1**	**4**	**1**	**2**	**1**	**4**	**2116** 6

DATE	BY	REV	REVISION
3-1-02	DM	4	REVISED QUANTITIES
12-04-02	DS	5	REVISED QUANTITIES
6-27-03	JNR	6	REVISED QUANTITIES

©1999 Texas Department of Transportation

Brown & Root
HOUSTON, TEXAS

IH 35/LOOP 20

SUMMARY OF TRAFFIC MANAGEMENT QUANTITIES

SHEET 2 OF 2

FED RD DIV NO	STATE PROJECT NO		SHEET NO
6	NH-99(462)		73
STATE	STATE DIST NO	COUNTY	
TEXAS	22	WEBB	
CONT	SECT	JOB	HIGHWAY NO
0018	06	131	IH 35

06-10-03 8:52 JN ESOS \MPUW\CFO\TOLDJASE2

QUANTITY SUMMARY

ITEM	DESCRIPTION	UNIT	LOOP 20 AT IH 35 W. FTG. RD. CSJ 0018-06-131	LOOP 20 AT IH 35 E. FTG. RD. CSJ 0018-06-131	SUB TOTAL LOOP 20 AT IH 35 CSJ 0018-06-131	LOOP 20 AT McPHERSON RD. CSJ 0086-14-023	FINAL TOTAL QUANTITY
618-505	CONDUIT (RM) (2 IN)	LF	10	10	20	10	30
618-511	CONDUIT (PVC) (SCHD 40) (TRENCH) (2 IN)	LF	485	490	975	490	1465
618-513	CONDUIT (PVC) (SCHD 40) (TRENCH) (3 IN)	LF	20	20	40	20	60
618-514	CONDUIT (PVC) (SCHD 40) (TRENCH) (4 IN)	LF	265	270	535	300	835
618-539	CONDUIT (PVC) (SCHD 80) (BORE) (2 IN)	LF	335	285	620	590	1210
618-542	CONDUIT (PVC) (SCHD 80) (BORE) (4 IN)	LF	105	165	270	405	675
620-510	ELEC CONDUCTOR (NO. 6) INSULATED	LF	858	933	1791	798	2589
628-545	ELECTRICAL SERVICE TY D(120/240)070(NS)GS(T)TP(O)	EA	1	1	2	0	2
628-620	ELECTRICAL SERVICE TY D(120/240)070(NS)GS(T)TP(U)	EA	0	0	0	1	1
624-503	GROUND BOX TY C (162911) W/APRON SLOPE OF 2%)	EA	9	9	18	11	29
656-510	FND FOR TRAF SIG (24 IN DRIL SHFT)	LF	20	20	40	20	60
656-518	FND FOR TRAF SIG CNTRL	CY	1	1	2	1	3
656-521	FND FOR TRAF SIG (TY A) (30 IN DRIL SHFT)	LF	10	0	10	0	10
656-542	FND FOR TRAF SIG (TY A) (36 IN DRIL SHFT)	LF	12	24	36	48	84
680-502	INSTAL OF HWY TRAF SIG (SYSTEM)	EA	1	1	2	1	3
6000	CONTROLLER (8 PH) (NEMA) (DIAMOND INTERCHANGE) AND CABINET (SUBSIDIARY TO 680-502)	EA	1	1	2	1	3
610-	LUMINAIRE (250 WATT) HPS (SUBSIDIARY TO ITEM 680)	EA	4	4	8	6	14
636-501	SMALL SIGNS (SUBSIDIARY TO ITEM 680)	EA	4	4	8	4	12
682-502	VEH SIG SEC (12 IN)	EA	30	30	60	46	106
682-505	PED SIG SEC (2 INDICATIONS IN 1 SEC)	EA	8	8	16	12	28
682-509	BACK PLATES (3 SEC) (12")	EA	5	5	10	4	14
684-502	TRAF SIG CBL (TY A) (2 CONDR) (12 AWG)	LF	2445	2470	4915	4880	9795
684-503	TRAF SIG CBL (TY A) (3 CONDR) (12 AWG) XHHW	LF	864	864	1728	1701	3429
684-504	TRAF SIG CBL (TY A) (4 CONDR) (12 AWG)	LF	1591	1616	3207	3149	6356
684-505	TRAF SIG CBL (TY A) (5 CONDR) (12 AWG)	LF	944	952	1896	1835	3731
684-507	TRAF SIG CBL (TY A) (7 CONDR) (12 AWG)	LF	0	0	0	635	635
684-558	TRAF SIG CBL (TY A) (3 CONDR) (18 AWG)	LF	944	952	1896	1867	3763
686-571	TRAF SIG POLE ASM (STL) 1 ARM (40') (W/LUM)	EA	0	0	0	2	2
686-549	TRAF SIG POLE ASM (STL) 2 ARM (32-28' W/LUM)	EA	1	0	1	0	1
686-550	TRAF SIG POLE ASM (STL) 2 ARM (32-32' W/LUM)	EA	1	1	2	0	2
686-553	TRAF SIG POLE ASM (STL) 2 ARM (36-28' W/LUM)	EA	0	0	0	2	2
686-554	TRAF SIG POLE ASM (STL) 2 ARM (36-32' W/LUM)	EA	0	1	1	0	1
688-501	PED DETECT (PUSH BTN)	EA	8	8	16	12	28
6008-501	PEDESTAL POLE ASSEM	EA	4	4	8	4	12
6010-501	SALV TRAF SIGNALS	EA	1	1	2	1	3
6210-501	ILSN SIGN 6 S	EA	4	4	8	4	12
6210-503	ILSN SIGN 8 S	EA	0	0	0	2	2
6959-501	VIVDS PROCESSOR SYSTEM	EA	1	1	2	1	3
6959-502	VIVDS CAMERA ASSEMBLY	EA	4	4	8	6	14
6959-503	VIVDS SET UP SYSTEM	EA	1	1	2	1	3
6959-505	VIVDS COMMUNICATION CABLE (COAXIAL)	LF	944	952	1896	1867	3763
8040-502	ANTENNA (UNIDIRECTIONAL)	EA	1	1	2	1	3
8040-501	COAXIAL CABLE	LF	412	196	608	270	878
8040-503	SPREAD SPECTRUM RADIO RECEIVER	EA	1	1	2	1	3
6955-501	LED TRAF SIGNAL LAMP (12 IN) (RED)	EA	10	10	20	14	34
6955-503	LED TRAF SIGNAL LAMP (12 IN) (GREEN)	EA	8	8	16	14	30

DATE	BY	REV	REVISION

TEI Traffic Engineers, Inc.
1323 Southwest Freeway, Suite 200, Houston, TX 77074

© 1998 Texas Department of Transportation

BROWN & ROOT, INC.
HOUSTON, TEXAS

LOOP 20
QUANTITY SUMMARY

SUMMARY of TRAFFIC SIGNAL QUANTITIES

0
Scale: N/A

SHEET 1 OF 1

FED RD DIV NO	STATE PROJECT NO		SHEET NO
6			74
STATE	STATE DIST NO		COUNTY
TEXAS	22		WEBB
CONT	SECT	JOB	HIGHWAY NO
0018	06	131	LOOP 20

filename: 35-ALLQTY.DGN

SUMMARY OF ILLUMINATION QUANTITIES

ITEM NO. - DESCRIPTION			416-524	432-524	610-509	610-519	613-506	614-501	614-502	618-501	618-505	618-511	618-532	620-501	620-503
LOCATION			DRL SHFT (60 IN) (HIGH MAST POLE)	RIPRAP (CONC) (CL B) (4 IN)	RDWY ILL ASSEM (TY SA 40S-8) (.25 KW)S	RDWY ILL AM U/P (TY SPL-CO) (.15 KW)S (TY 3)	HIGH MAST ILL POLE (150 FT) (80 MPH)	HI MST ILL ASM (12-400 W) (ASYM)	HI MST ILL ASM (12-400 W) (SYM)	CONDUIT (RM) (3/4 ")	CONDUIT (RM) (2 ")	CONDUIT (PVC) (SCHD 40) (2 ")	CONDUIT (PVC) (SCHD 40) (2 ") (BORE)	ELEC CONDR (NO. 12) BARE	ELEC CONDR (NO. 8) BARE
SHEET NO.	BEGINNING STATION	ENDING STATION	LF	CY	EA	EA	EA	EA	EA	LF	LF	LF	M	LF	LF
CSJ 0086-14-023															
LOOP 20															
1	381+00.00	405+00.00										410.00			415.00
2	405+00.00	425+00.00	128.00	10.24			4.00	4.00				2680.00	120.00		2855.00
3	425+00.00	450+00.00	384.00	30.72		12.00	12.00	2.00	10.00	220.00	50.00	5092.00	340.00	250.00	4437.00
4	450+00.00	475+00.00	192.00	15.36			6.00	6.00				3532.00	210.00		3802.00
5	475+00.00	500+00.00	160.00	12.80			5.00	5.00				3283.00			3323.00
6	500+00.00	520+00.00			4.00							660.00	80.00		760.00
SUBTOTAL CSJ 0086-14-023			864.00	69.12	4.00	12.00	27.00	17.00	10.00	220.00	50.00	15657.00	750.00	250.00	15592.00
CSJ 0018-06-131															
IH 35															
1	100+00.00	125+00.00	128.00	10.24			4.00	4.00				1875.00	130.00		2050.00
2	138+00.00	158+00.00	128.00	10.24			4.00	4.00				2573.00	185.00		2823.00
3	158+00.00	173+00.00	96.00	7.68			3.00	3.00				1215.00			1235.00
4	243+00.00	250+00.00			3.00							700.00	40.00		770.00
SUBTOTAL CSJ 0018-06-131			352.00	28.16	3.00	0.00	11.00	11.00	0.00	0.00	0.00	6363.00	355.00	0.00	6878.00
TOTALS			1216.00	97.28	7.00	12.00	38.00	28.00	10.00	220.00	50.00	22020.00	1105.00	250.00	22470.00

STATE OF TEXAS
CHARLES WILLIAM SVEC
57814
REGISTERED PROFESSIONAL ENGINEER

The seal appearing on this document was authorized by Charles William Svec P.E. 57814, on April 2, 1999.

DATE	BY	REV	REVISION

© 1999 Texas Department of Transportation

Brown & Root
HOUSTON, TEXAS

IH 35/LOOP 20

ROADWAY LIGHTING
SUMMARY OF ILLUMINATION QUANTITIES

SHEET 1 OF 2

FED RD DIV NO	STATE PROJECT NO	SHEET NO
6		73
STATE	STATE DIST NO	COUNTY
TEXAS	22	WEBB
CONT	SECT / JOB	HIGHWAY NO

D32QSX02.DGN-06 04-05-99 BAR_HO_ES05 \HCIVIL\CF0039\PHASE2

SUMMARY OF ILLUMINATION QUANTITIES

ITEM NO. - DESCRIPTION			620-508	620-509	620-510	624-503	628-554	628-586	656-535
LOCATION			ELEC CONDR (NO. 10) INSU	ELEC CONDR (NO. 8) INSU	ELEC CONDR (NO. 6) INSU	GROUND BOX TY C (169211) W/APRON	ELEC SERV TY A (240/480) 60(NS)GS (E)TP(O)	ELEC SERV TYA (240/480) 100(NS)GS (E)TP(O)	FND FOR RDWY ILL ASM (TY A) (30 IN DR SH)
SHEET NO.	BEGINNING STATION	ENDING STATION	LF	LF	LF	EA	EA	EA	LF
CSJ 0086-14-023									
	LOOP 20								
1	381+00.00	405+00.00		830.00		1.00			
2	405+00.00	425+00.00		4510.00	1480.00	11.00		1.00	
3	425+00.00	450+00.00	500.00	8314.00	450.00	22.00		1.00	
4	450+00.00	475+00.00		6484.00	1210.00	10.00		2.00	
5	475+00.00	500+00.00		6646.00		8.00		2.00	
6	500+00.00	520+00.00		1520.00		1.00	1.00		24.00
SUBTOTAL CSJ 0086-14-023			500.00	28304.00	3140.00	53.00	1.00	6.00	24.00
CSJ 0018-06-131									
	IH 35								
1	100+00.00	125+00.00		4100.00		8.00		2.00	
2	138+00.00	158+00.00		5646.00		11.00		2.00	
3	158+00.00	173+00.00		2470.00		4.00		2.00	
4	243+00.00	250+00.00		1540.00		3.00	1.00		18.00
SUBTOTAL CSJ 0018-06-131			0.00	13756.00	0.00	26.00	1.00	6.00	18.00
	TOTALS		500.00	42060.00	3140.00	79.00	2.00	12.00	42.00

STATE OF TEXAS
CHARLES WILLIAM SVEC
57814
REGISTERED PROFESSIONAL ENGINEER

The seal appearing on this document was authorized by Charles William Svec P.E. 57814, on April 6, 1999.

DATE	BY	REV	REVISION

© 1999 Texas Department of Transportation

Brown & Root
HOUSTON, TEXAS

IH 35/LOOP 20

ROADWAY LIGHTING
SUMMARY OF ILLUMINATION QUANTITIES

SHEET 2 OF 2

FED RD DIV NO	STATE PROJECT NO		SHEET NO
6	C86-14-23		76
STATE	STATE DIST NO		COUNTY
TEXAS	22		WEBB
CONT	SECT	JOB	HIGHWAY NO
0086	14	023	LOOP 20

D320SX03.DGN-07 04-06-99 BAR_HO_ES05 \HCIVIL\CF0039\PHASE2

REFER TO DETAIL

SUMMARY OF LANDSCAPE

LINE NO.	ITEM NO.	ITEM DESCRIPTION	UNITS	QUANTITY
	0170-0501	IRRIGATION SYSTEM	LS	1
	0180-0501	WILDFLOWER SEEDING	AC	26.60
	0192-0809	LIVE OAK TREE	EA	4
	0193-0501	PLANT MAINTENANCE	MO	12
	0193-0502	PLANT REPLACEMENT	EA	2
	0193-0504	IRRIGATION SYSTEM OPERATION AND MAINTENANCE	MO	12
	0432-0524	CONC RIPRAP (CLASS B)	CY	407
	5579-0501	LANDSCAPE PAVERS	SF	25731
	0529-0501	CONC CURB (TY I)	LF	134
	0529-0533	CONC CURB (TY II)	LF	1820
	5559-0501	COLORED TEXTURIZED CONC. (4")	SY	1060
	5047-0502	LANDSCAPE BOULDER	EA	12
	8033-0501	LIGHTING SYSTEM	EA	1

©1999 Texas Department of Transportation

SHEET 1 OF 1

LANDSCAPE SUMMARY SHEET

AMILODES01.DGN

FED RD DIV. NO	PROJECT NO	SHEET NO.
6	NA 99(462)	77

STATE	STATE DIST. NO.	COUNTY	
TEXAS	22	WEBB	
CONT.	SECT.	JOB	HIGHWAY NO.
0018	06	131	IH-35

1. THIS IS A SUGGESTED TRAFFIC CONTROL PLAN SUBMITTED FOR THE CONTRACTOR'S CONSIDERATION ONLY. THE CONTRACTOR MAY SUBMIT AN ALTERNATE CONSTRUCTION SEQUENCE AND TRAFFIC CONTROL PLAN IN WRITING TO THE ENGINEER FOR WRITTEN APPROVAL. ALL WORK AND MATERIALS REQUIRED FOR TRAFFIC HANDLING WILL NOT BE PAID FOR DIRECTLY BUT WILL BE CONSIDERED PART OF ITEM 502 "BARRICADES, SIGNS AND TRAFFIC HANDLING." ALL BARRICADES AND SIGNS SHALL BE INSTALLED BY THE CONTRACTOR. THE CONTRACTOR SHALL AT ALL TIMES MAINTAIN A SUFFICIENT SUPPLY OF BARRICADES AND/OR SIGNS TO REPLACE THOSE DAMAGED.

2. FLASHING WARNING LIGHTS AND/OR FLAGS SHALL BE USED TO CALL ATTENTION TO THE ADVANCE WARNING SIGNS.

3. ADEQUATE SIGNS AND BARRICADES SHALL BE INSTALLED BY THE CONTRACTOR AND APPROVED BY THE ENGINEER PRIOR TO OPENING ANY SECTION TO TRAFFIC.

4. REFER TO BC(2)-98 FOR PLACEMENT OF SIGNS AND BARRICADES FOR ALL ROAD CLOSURES.

5. ADDITIONAL SIGNS, BARRICADES AND/OR OTHER CHANNELIZING DEVICES MAY BE NEEDED, REQUIRED AND/OR ADJUSTED TO MATCH FIELD CONDITIONS AS DIRECTED BY THE ENGINEER. PAYMENT WILL NOT BE MADE DIRECTLY BUT WILL BE CONSIDERED SUBSIDIARY TO ITEM 502, "BARRICADES, SIGNS AND TRAFFIC HANDLING."

6. ACCESS TO ALL EXISTING ADJACENT ROADS AND DRIVEWAYS WITHIN THE PROJECT LIMITS SHALL BE MAINTAINED EXCEPT AS OTHERWISE PROVIDED FOR AND APPROVED BY THE ENGINEER.

7. THOSE PORTIONS OF THE PROJECT WHICH REQUIRE CONSTRUCTION UNDER TRAFFIC SHALL BE MAINTAINED IN A CONDITION ACCEPTABLE TO THE ENGINEER. THIS WORK WILL NOT BE PAID FOR DIRECTLY BUT WILL BE CONSIDERED SUBSIDIARY TO THE VARIOUS BID ITEMS.

8. ALL SIGNS, BARRICADES AND PAVEMENT MARKINGS, TEMPORARY AND PERMANENT, SHALL BE THE RESPONSIBILITY OF THE CONTRACTOR AND SHALL CONFORM TO THE "WORK ZONE STANDARDS" AND THE "TRAFFIC CONTROL PLAN STANDARDS" OF THE TEXAS DEPARTMENT OF TRANSPORTATION TRAFFIC OPERATIONS DIVISION AND TO THE "TEXAS MANUAL ON UNIFORM TRAFFIC CONTROL DEVICES" (MUTCD).

9. CONSTRUCTION IN ANY AREA THAT IS ADVERSELY AFFECTING TRAFFIC FLOW AND/OR SAFETY MUST BE PURSUED DILIGENTLY BY THE CONTRACTOR. IF, IN THE OPINION OF THE ENGINEER, CONSTRUCTION IS NOT PROCEEDING TOWARDS COMPLETION IN THESE AREAS, THE ENGINEER MAY REQUIRE THE CONTRACTOR TO ALTER THE WORK SCHEDULE TO EXPEDITE COMPLETION IN THE AREAS OF CONCERN.

10. CHANNELIZING DEVICES WILL BE REQUIRED ALONG THE EDGE OF ROADWAYS OPENED TO TRAFFIC AS DIRECTED BY THE ENGINEER. PLASTIC DRUMS SHALL BE USED AS CHANNELIZATION DEVICES WITH SPACING AS SHOWN ON THE PLANS, AS SHOWN ON BC(1) THRU BC(9C)-98 STANDARDS AND THE TEXAS MUTCD AND/OR AS DIRECTED BY THE ENGINEER.

11. THE CONTRACTOR'S ATTENTION IS DIRECTED TO THE REQUIREMENTS OF ITEM 7 "LEGAL RELATIONS AND RESPONSIBILITIES TO THE PUBLIC."

12. ALL WORK AND MATERIALS REQUIRED FOR THE REMOVAL OF EXISTING PAVEMENT MARKINGS WHICH MUST BE REMOVED SHALL BE PAID FOR UNDER ITEM 677 "ELIMINATING EXISTING PAVEMENT MARKINGS AND MARKERS." QUANTITIES BY PHASE ARE SHOWN IN THE "SUMMARY OF TRAFFIC CONTROL QUANTITIES" AND LIMITS ARE SHOWN IN THE SEQUENCE OF WORK ON THE "LOOP 20/IH35 SEQUENCE OF CONSTRUCTION" SHEETS.

13. UNLESS OTHERWISE SHOWN ON THE PLANS, REMOVABLE WORK ZONE PAVEMENT MARKINGS SHALL BE WATER BASED PAINT AND SHALL CONFORM TO APPROPRIATE DEPARTMENTAL MATERIAL SPECIFICATIONS.

14. ALL SPECIAL GUIDE AND DETOUR ROUTING SIGNS TO BE ATTACHED TO EXISTING OVERHEAD SIGN STRUCTURES SHALL BE ATTACHED BY THE CONTRACTOR IN A METHOD APPROVED BY THE ENGINEER.

15. EXISTING SIGNS WHICH ARE COMPLETELY REMOVED BUT ARE TO BE USED AGAIN SHALL BE STORED BY THE CONTRACTOR IN A VERTICAL POSITION, UNTIL SUCH TIME AS THE SIGNS ARE REPLACED IN THE ORIGINAL OR PROPOSED LOCATIONS.

16. THE CONTRACTOR SHALL FURNISH ANY ADDITIONAL SIGNS AND/OR REVISE SIGNS AS NEEDED DURING CONSTRUCTION TO SAFELY DIRECT TRAFFIC THROUGH THE PROJECT. NO DIRECT PAYMENT WILL BE MADE FOR PROVIDING ADDITIONAL SIGNS OR REVISING EXISTING SIGNS, BUT SHALL BE CONSIDERED AS SUBSIDIARY WORK TO ITEM 502, "BARRICADES, SIGNS AND TRAFFIC HANDLING."

17. THE CONTRACTOR IS ADVISED THAT ITEM 502, "SIGNS, BARRICADES AND TRAFFIC HANDLING", SHALL INCLUDE FURNISHING ALL WORK, MATERIALS, LABOR, TOOLS, EQUIPMENT AND INCIDENTALS NECESSARY TO REMOVE, STORE AND REPLACE EXISTING OVERHEAD AND SPECIAL GUIDE SIGNS. THIS WORK WILL NOT BE PAID FOR DIRECTLY, BUT SHALL BE CONSIDERED SUBSIDIARY TO THIS ITEM.

18. ALL EXISTING DRAINAGE CONDITIONS WILL BE MAINTAINED DURING THE CONSTRUCTION OF ALL PHASES. ALL WORK AND MATERIALS FOR NECESSARY TEMPORARY DRAINAGE STRUCTURES WILL NOT BE PAID FOR DIRECTLY BUT WILL BE CONSIDERED SUBSIDIARY TO VARIOUS BID ITEMS UNLESS OTHERWISE INDICATED.

19. NO CONSTRUCTION EQUIPMENT IS TO REMAIN ON THE ROADWAY DURING NIGHT HOURS UNLESS AUTHORIZED BY THE ENGINEER.

20. THE STATE WILL FURNISH THE PORTABLE CONCRETE TRAFFIC BARRIER SECTIONS FOR ITEM 512, "PORT CONC TRAF BAR (STKPL, INSTL & RETRN)". STOCKPILE LOCATION STATED ELSEWHERE IN PLANS. THE CONTRACTOR IS RESPONSIBLE FOR PROVIDING SUFFICIENT HARDWARE TO CONNECT THE SECTIONS TOGETHER.

21. THE CONTRACTOR IS RESPONSIBLE FOR PURCHASING AND INSTALLING ATTENUATING DEVICES UNDER ITEM 5453, "QUADGUARD SYS (36") (TY CZ) 7 BAY". AFTER COMPLETION OF THE PROJECT, THE DEVICES AND ALL ASSOCIATED HARDWARE BECOME THE PROPERTY OF THE STATE AND ARE TO BE STOCKPILED AT A LOCATION STATED ELSEWHERE IN THE PLANS.

22. THE CONTRACTOR SHALL PROVIDE ADEQUATE PROTECTION TO KEEP DEBRIS OF BRIDGE DECK REMOVAL AND CONSTRUCTION FROM FALLING ONTO VEHICLES PASSING UNDERNEATH THE BRIDGE. IF ADDITIONAL TRAFFIC CONTROL MEASURES ARE REQUIRED, THE TRAFFIC PLAN SHALL BE IN ACCORDANCE WITH THE STANDARD SHEETS "BC(1) THRU BC(9C)-98(M)" AND PART VI OF THE "TEXAS M.U.T.C.D.", AS APPROVED BY THE ENGINEER. THIS WORK WILL NOT BE PAID FOR DIRECTLY, BUT SHALL BE CONSIDERED SUBSIDIARY TO ITEM 502, "BARRICADES, SIGNS AND TRAFFIC HANDLING."

23. DO NOT BEGIN UNIROYAL ROAD CONSTRUCTION UNTIL MILO INTERCHANGE PHASE III IN ORDER TO MINIMIZE THE AMOUNT OF TRAFFIC USING THE INTERSECTION.

STATE OF TEXAS
JEFFERY T. SEILER
77187
REGISTERED PROFESSIONAL ENGINEER

Jeffery T. Seiler
5-12-99

DATE	BY	REV	REVISION

© 1999 Texas Department of Transportation

Brown & Root
HOUSTON, TEXAS

RNH
RODRIGUEZ & HUGGINS, INC.
CONSULTING ENGINEERS
11824 JOLLYVILLE ROAD SUITE 402
AUSTIN, TEXAS 78759
PHONE: 512 335 1754 FAX: 512 335 1799

LOOP 20/IH35
TRAFFIC CONTROL PLAN
GENERAL NOTES

SHEET 1 OF 1

FED RD DIV NO	STATE PROJECT NO		SHEET NO
6			78
STATE	STATE DIST NO		COUNTY
TEXAS	22		WEBB
CONT	SECT	JOB	HIGHWAY NO
0086	14	023	LOOP 20
0018	26	131	

p:\80903\milo interchange\dir\milogn

PHASE I - TRAFFIC OPERATIONS

GENERAL
1. FOLLOW APPLICABLE MUTCD AND TCP STANDARDS FOR TRAFFIC CONTROL. ANY ADDITIONAL TRAFFIC CONTROL DEVICES DEEMED NECESSARY BY THE ENGINEER WILL BE REQUIRED.
2. MOVE RAILROAD TRAFFIC ONTO SHOOFLY.

LP20
1. PLACE FM3464 TRAFFIC ONTO RAILROAD CROSSING DETOUR "3464RR".

IH35
1. OPEN DETOUR "35N1A" AND DETOUR "35S1D".
2. CLOSE EXISTING IH35 NORTHBOUND EXIT RAMP TO FM3464.
3. RESTRICT THE EXISTING IH35 WEST FRONTAGE ROAD TO ONE LANE OF TRAFFIC.
4. SHIFT EXISTING IH35 MAIN LANE TRAFFIC TO THE EXISTING NORTHBOUND LANES AND MAINTAIN TWO WAY TRAFFIC WITH ONE LANE IN EACH DIRECTION.
5. CLOSE THE EXISTING IH35 RAMPS LOCATED IMMEDIATELY NORTH OF LOOP 20 WHEN THE DIRECT CONNECTION CONSTRUCTION REQUIRES.

PHASE I - CONSTRUCTION OPERATIONS

GENERAL
1. INSTALL AND TEST OPERATION OF HIGH MAST ILLUMINATION ASSEMBLIES AND ASSOCIATED ITEMS.
2. REMOVE, REVISE AND PLACE EXISTING AND PROPOSED SIGNS AS SHOWN IN PHASE I TRAFFIC CONTROL PLAN SHEETS.
3. CONSTRUCT RAILROAD SHOOFLY STRUCTURE.

LP20
1. INSTALL DETOUR "3464RR", REALIGN THE IH35 EAST FRONTAGE ROAD INTERSECTION AND INSTALL TEMPORARY SIGNALS AND RAILROAD PLANKING/WARNING DEVICES.
2. CONSTRUCT REMAINING PORTION OF LOOP 20 EASTBOUND MAIN LANES AND ALL OF THE LOOP 20 WESTBOUND MAIN LANES.
3. CONSTRUCT RAILROAD BRIDGES AT PROPOSED LOOP 20 FRONTAGE ROADS.
4. CONSTRUCT LOOP 20 EASTBOUND FRONTAGE ROAD FROM STATION 459+50 TO RAMP "H", MCPHERSON ROAD FROM BEGINNING TO APPROXIMATE STATION 10+50 INCLUDING PERMANENT SIGNALS AT THE INTERSECTION WITH LOOP 20 EASTBOUND LANES AND RAMP "H".
5. CONSTRUCT DETOUR "20W1A".
6. INSTALL SIGN BRIDGES "D", "E", "F", AND "G" AND ROADSIDE SIGNS AS SHOWN IN THE PHASE I TRAFFIC CONTROL PLAN SHEETS.
7. EXISTING STRIPING REMOVALS ARE DESCRIBED BELOW:
   A. ALL EXISTING STRIPING FROM STATION 439+00 TO STATION 442+00 AND FROM STATION 446+00 TO STATION 448+75.
   B. ON MCPHERSON ROAD, THE CENTER LEFT TURN LANE AND THE NORTHBOUND LANE STRIPE FROM 1050 FT. SOUTH OF THE PROPOSED LOOP 20 R.O.W TO 350' SOUTH OF THE R.O.W., THEN ONLY THE LANE STRIPE TO THE INTERSECTION.
   C. ON MCPHERSON ROAD, ALL STRIPING NORTH OF THE EXISTING INTERSECTION TO 855 FT. NORTH OF THE LOOP 20 R.O.W.

IH35
1. INSTALL DETOURS "35N1A", "35N1B", "35S1B" AND "35S1D".
2. FILL IH35 MAIN LANE MEDIAN WITH TEMPORARY PAVEMENT STRUCTURE FROM STATION 94+65 TO STATION 108+90 AND STATION 173+00 TO STATION 190+40 TO ACCOMODATE TRAFFIC SWITCHES.
3. CONSTRUCT THE PROPOSED IH35 RAMP "P" AND THE IH35 WEST FRONTAGE ROAD AND TEMPORARY TIE-IN SECTION FROM NEAR STATION 152+00 TO THE END OF THE FRONTAGE ROAD RECONSTRUCTION IN HALF-WIDTHS IN ORDER TO MAINTAIN ONE-WAY TRAFFIC. THIS WORK SHOULD BE ACCOMPLISHED PRIOR TO THE CLOSING OF THE EXISTING IH35 SOUTHBOUND TO LOOP 20 EXIT RAMP IF POSSIBLE TO MINIMIZE TRAFFIC IN THE CONSTRUCTION AREA.
4. CONSTRUCT THE IH35 SOUTHBOUND MAIN LANES FROM STATION 158+00 TO THE END OF THE PROJECT.
5. CONSTRUCT A TEMPORARY BRIDGE ALONG THE EXISTING IH35 SOUTHBOUND MAIN LANES.
6. INSTALL SIGN BRIDGE "M" AND ROADSIDE SIGNS AS SHOWN IN PHASE I TRAFFIC CONTROL PLAN SHEETS.
7. EXISTING STRIPING REMOVALS ARE DESCRIBED BELOW:
   A. NORTHBOUND BROKEN LANE LINE FROM STATION 99+85 TO STATION 180+00.
   B. NORTHBOUND INSIDE SHOULDER LINE FROM STATION 101+50 TO STATION 182+00.
   C. NORTHBOUND OUTSIDE SHOULDER LINE FROM STATION 102+50 TO STATION 179+10 AND STATION 196+50 TO STATION 199+40.
   D. NORTHBOUND EXIT RAMP GORE SOUTH OF THE INTERCHANGE.
   E. EAST AND WEST FRONTAGE ROAD INTERSECTION STRIPING AT LOOP 20.
   F. NORTHBOUND ENTRANCE RAMP GORE NORTH OF THE INTERCHANGE WHEN THE RAMP IS CLOSED.
   G. SOUTHBOUND OUTSIDE SHOULDER FROM STATION 185+00 TO STATION 190+00.
   H. SOUTHBOUND INSIDE SHOULDER FROM STATION 187+00 TO STATION 192+30.
   I. EAST FRONTAGE ROAD LANE AND INSIDE SHOULDER FROM STATION 192+00 TO STATION 194+00.

DIRECT CONNECTORS
1. BEGIN CONSTRUCTION OF BOTH DIRECT CONNECTIONS.
2. INSTALL SIGN BRIDGES "H", "I", "K" AND "L".

PHASE IA - TRAFFIC OPERATIONS

GENERAL
1. RETURN RAILROAD TRAFFIC TO MAIN LINE.
2. REMOVE, REVISE AND PLACE EXISTING AND PROPOSED SIGNS AS SHOWN IN PHASE IA.

LP20
1. OPEN LOOP 20 EASTBOUND EXIT RAMP TO TRAFFIC.

IH35
1. CLOSE EXISTING SOUTHBOUND ENTRANCE RAMP AND SHIFT TRAFFIC TO DETOUR "35S1B" CONSTRUCTED IN PHASE I.
2. SHIFT IH35 MAIN LANE TRAFFIC TO THE SOUTHBOUND MAIN LANES (USING TEMPORARY BRIDGE CONSTRUCTED IN PHASE I) AND MAINTAIN TWO-WAY TRAFFIC.

PHASE IA - CONSTRUCTION OPERATIONS

GENERAL
1. REMOVE RAILROAD SHOOFLY.

LP 20
1. MOVE TEMPORARY SIGNALS AT THE INTERSECTION OF LOOP 20 AND IH35 EAST FRONTAGE ROAD AS NECESSARY.
2. EXISTING STRIPING REMOVALS ARE DESCRIBED BELOW:
   A. EASTBOUND INSIDE LANE AND SHOULDER STRIPING FROM STATION 406+00 TO STATION 412+00.

IH35
1. INSTALL TEMPORARY RETAINING WALLS WITHIN THE LIMITS SHOWN.
2. CONSTRUCT IH35 NORTHBOUND MAIN LANES FROM STATION 158+08.21 TO THE END OF THE PROJECT.
3. BEGIN CONSTRUCTION OF IH35 NORTHBOUND MAIN LANES WITHIN THE ENTIRE PROJECT LIMITS.
4. EXISTING STRIPING REMOVALS ARE DESCRIBED BELOW:
   A. NORTHBOUND BROKEN LANE LINE FROM STATION 93+85 TO STATION 99+85.
   B. NORTHBOUND INSIDE SHOULDER FROM STATION 93+85 TO STATION 101+50 AND STATION 182+00 TO STATION 187+00.
   C. ALL SOUTHBOUND MAIN LANE STRIPING FROM STATION 104+20 TO STATION 158+00 EXCEPT FOR THE TEMPORARY BRIDGE.
   D. SOUTHBOUND ENTRANCE RAMP GORE SOUTH OF THE INTERCHANGE.
   E. SOUTHBOUND EXIT RAMP GORE NORTH OF THE INTERCHANGE.
   F. SOUTHBOUND BROKEN LANE LINE FROM STATION 175+50 TO STATION 182+00.

DIRECT CONNECTORS
1. COMPLETE CONSTRUCTION OF DIRECT CONNECTIONS.

PHASE II - TRAFFIC OPERATIONS

GENERAL
1. REMOVE, REVISE AND PLACE EXISTING AND PROPOSED SIGNS AS SHOWN IN PHASE II.

LOOP 20
1. REVISE EXISTING SIGNAL PHASING AT INTERSECTION WITH IH35 WEST FRONTAGE ROAD DUE TO NO LEFT TURN TO IH35 SOUTH.

DIRECT CONNECTORS
1. OPEN DIRECT CONNECTIONS.

PHASE II - CONSTRUCTION OPERATIONS

LP 20
1. CONSTRUCT LOOP 20 EASTBOUND FRONTAGE ROAD INCLUDING PERMANENT AND TEMPORARY SIGNALS AT PROPOSED IH35 INTERSECTION LOCATIONS AND ALL ASSOCIATED DRAINAGE ITEMS FROM THE ADJOINING PROJECT ENDING TO APPROXIMATE STATION 441+50 AND FROM APPROXIMATE STATION 443+00 TO STATION 459+50.
2. JACK OR BORE THE LP20 DRAINAGE TRUNK LINE UNDER THE EXISTING IH35 EAST FRONTAGE ROAD TO COMPLETE THE SYSTEM.

IH35
1. INSTALL TEMPORARY RETAINING WALLS WITHIN THE LIMITS SHOWN.
2. CONSTRUCT IH35 NORTHBOUND MAIN LANES FROM BEGINNING OF PROJECT TO STATION 117+00.
3. CONSTRUCT IH35 NORTHBOUND EXIT RAMP AND EAST FRONTAGE ROAD FROM STATION 120+00 TO APPROXIMATE STATION 131+00.
4. CONSTRUCT SOUTH IH35 FRONTAGE ROAD TURNAROUND AND IH35 WEST FRONTAGE ROAD FROM THE TIE-IN WITH THE EXISTING FRONTAGE ROAD TO APPROXIMATE STATION 131+00.
5. EXISTING STRIPING REMOVALS ARE DESCRIBED BELOW:
   A. NORTHBOUND BROKEN LANE LINE FROM STATION 180+00 TO STATION 187+00.
   B. NORTHBOUND OUTSIDE SHOULDER FROM STATION 179+10 TO STATION 187+00.

STATE OF TEXAS
JEFFERY T. SEILER
77187
REGISTERED PROFESSIONAL ENGINEER

5-6-99

DATE	BY	REV	REVISION

© 1999
Texas Department of Transportation

Brown & Root
HOUSTON, TEXAS

RSH
RODRIGUEZ & HUGGINS, INC.
CONSULTING ENGINEERS
11824 JOLLYVILLE ROAD SUITE 402
AUSTIN, TEXAS 78759
PHONE: 512 335 1784 FAX: 512 335 1799

LOOP 20/IH35

SEQUENCE OF CONSTRUCTION

SHEET 1 OF 2

FED RD DIV NO	STATE PROJECT NO		SHEET NO
6			79
STATE	STATE DIST NO		COUNTY
TEXAS	22		WEBB
CONT	SECT	JOB	HIGHWAY NO
0086	14	023	LOOP 20
0018	06	131	

p:\60903\vmlo interchange\dlr\vmloseq

PHASE IIA - TRAFFIC OPERATIONS

THE INTENT OF THIS PHASE IS TO COMPLETE THE REMAINING SECTION OF THE LOOP 20 EASTBOUND FRONTAGE ROAD AND OPEN IMMEDIATELY TO TWO-WAY TRAFFIC IN PHASE III. THIS WILL LIMIT THE TIME REQUIRED FOR THE NORTHBOUND IH35 MAIN LANE DETOUR VIA UNIROYAL ROAD FOR EXITING LOOP 20 TRAFFIC.

GENERAL
1. REMOVE, REVISE AND PLACE EXISTING AND PROPOSED SIGNS AS SHOWN IN PHASE IIA.

LP20
1. REVISE TEMPORARY SIGNAL PHASING AS NECESSARY.
2. CLOSE LOOP 20 EASTBOUND FRONTAGE ROAD TO IH35 WEST FRONTAGE ROAD DETOUR.

IH35
1. CLOSE THE IH35 NORTHBOUND EXIT RAMP TO LOOP 20 - DETOUR VIA UNIROYAL ROAD, DIRECT CONNECTION #2 AND FM1472.
2. OPEN IH35 WEST FRONTAGE ROAD FROM PROPOSED LOOP 20 EASTBOUND FRONTAGE ROAD TO THE SOUTH TIE-IN. IH35 ACCESS IS STILL VIA DETOUR "35S1B".

PHASE IIA - CONSTRUCTION OPERATIONS

LP 20
1. COMPLETE THE SMALL AMOUNT OF REMAINING EASTBOUND LOOP 20 FRONTAGE ROAD CONSTRUCTION LOCATED NEAR THE RAILROAD STRUCTURE. THIS WORK SHALL SHALL BE PERFORMED ON A CONTINUOUS 24-HOUR OPERATION UNTIL COMPLETED.
2. REMOVE LOOP 20 EASTBOUND FRONTAGE ROAD TO IH35 WEST FRONTAGE ROAD DETOUR.
3. BEGIN CONSTRUCTION OF DETOUR "20W3A".
4. INSTALL TEMPORARY SIGNAL SYSTEM FOR LOOP 20 EASTBOUND FRONTAGE ROAD OPERATING WITH TWO-WAY TRAFFIC.

IH35
1. CONTINUE NORTHBOUND IH35 MAIN LANE RECONSTRUCTION.
2. REMOVE DETOUR "35N1A".

PHASE III - TRAFFIC OPERATIONS

GENERAL
1. REMOVE, REVISE AND PLACE EXISTING AND PROPOSED SIGNS AS SHOWN IN PHASE III.

LP20
1. TEMPORARY AND PERMANENT SIGNALS ALONG LOOP 20 BECOME OPERATIONAL.
2. OPEN THE PERMANENT RAMP "K" LOCATED ALONG EASTBOUND LOOP 20 EAST OF MCPHERSON.
3. SHIFT LOOP 20 EASTBOUND TRAFFIC TO THE COMPLETED LOOP 20 EASTBOUND FRONTAGE ROAD AND COMPLETE CONSTRUCTION OF DETOUR "20W3A" AS DEFINED IN PHASE III - CONSTRUCTION OPERATIONS.
4. OPEN DETOURS "20W3A" AND "20W3B" FOR WESTBOUND LOOP 20 TRAFFIC.

IH35
1. OPEN IH35 NORTHBOUND EXIT RAMP "D".
2. CLOSE IH35 SOUTHBOUND EXIT RAMP "P".
3. RESTRICT IH35 WEST FRONTAGE TO ONE-WAY OPERATION (NORTHBOUND) NORTH OF DETOUR "35S1D".
4. DETOUR IH35 SOUTHBOUND MAIN LANE TRAFFIC WANTING TO ACCESS EASTBOUND LOOP 20 VIA DIRECT CONNECTION #2 AND THE FM1472 TURNAROUND.
5. MAINTAIN TWO-WAY IH35 MAIN LANE TRAFFIC ALONG SOUTHBOUND LANES.

PHASE III - CONSTRUCTION OPERATIONS

UNIROYAL ROAD
1. BEGIN CONSTRUCTION. SEE IH35 @ UNIROYAL ROAD TRAFFIC CONTROL PLANS.

LP20
1. REMOVE THE EASTBOUND LOOP 20 TO EXISTING LOOP 20 DETOUR BUILT IN ADJOINING PROJECT.
2. COMPLETE DETOUR "20W3A" CONSTRUCTION FOR TWO-WAY LOOP 20 TRAFFIC BEFORE BEGINNING THE PHASE III CONSTRUCTION OPERATIONS SHOWN BELOW.
3. CONSTRUCT LOOP 20 WESTBOUND FRONTAGE ROAD WEST OF IH35.
4. EXISTING STRIPING REMOVALS ARE DESCRIBED BELOW:
   A. ON EXISTING LOOP 20, CENTER LANE LINE AND ALL EASTBOUND STRIPING FROM STATION 488+00 TO STATION 491+00.
   B. ON EXISTING LOOP 20, EASTBOUND SHOULDER FROM STATION 509+50 TO STATION 513+00.

IH35
1. COMPLETE IH35 NORTHBOUND MAIN LANE CONSTRUCTION.
2. COMPLETE THE IH35 WEST FRONTAGE ROAD SECTION INCLUDING PERMANENT SIGNALS AT THE INTERSECTION WITH LOOP 20.

PRE-PHASE IV - TRAFFIC OPERATIONS

1. PLACE PCTB BARRIER NEEDED TO SEPARATE OPPOSING IH35 TRAFFIC USING PHASE III SOUTHBOUND EXIT RAMP BARRIER FROM STATION 107+00 TO STATION 116+30 AND NEW BARRIER FROM STATION 116+30 TO STATION 178+30 AS SHOWN IN PHASE IV PLAN SHEETS BEFORE INITIATING TRAFFIC SWITCH. NORTHBOUND TRAFFIC CAN THEN BE MOVED ONTO THE COMPLETED IH35 SECTION BEFORE REMOVING AND RESETTING PHASE III BARRIER TO COMPLETE THE PHASE IV TCP SET-UP.

PHASE IV - TRAFFIC OPERATIONS

GENERAL
1. REMOVE, REVISE AND PLACE EXISTING AND PROPOSED SIGNS AS SHOWN IN PHASE IV.

LP20
1. CLOSE EXISTING LOOP 20 EAST OF IH35 EXCEPT AS SHOWN IN THE PHASE IV TRAFFIC CONTROL PLAN SHEETS.
2. REVISE THE SIGNAL PHASING AT THE INTERSECTION OF THE PROPOSED LOOP 20 EASTBOUND FRONTAGE ROAD AND THE IH35 WEST FRONTAGE ROAD TO ACCOMODATE NEW SOUTHBOUND TRAFFIC.

IH35
1. SHIFT IH35 MAIN LANE TRAFFIC TO THE NEW NORTHBOUND LANES AND MAINTAIN TWO WAY TRAFFIC WITH ONE LANE IN EACH DIRECTION.
2. OPEN IH35 SOUTHBOUND EXIT RAMP "P"
3. ACCESS FROM GRAND CENTRAL BLVD AREA TO NORTHBOUND IH35 VIA MCPHERSON ROAD, LOOP 20 AND FM1472; ACCESS TO SOUTHBOUND IH35 VIA MCPHERSON ROAD AND LOOP 20.
4. OPEN THE COMPLETED IH35 WEST FRONTAGE ROAD.

PHASE IV - CONSTRUCTION OPERATIONS

LP20
1. CONSTRUCT PORTION OF LOOP 20 WESTBOUND FRONTAGE ROAD EAST OF IH35.
2. COMPLETE MCPHERSON ROAD INTERSECTION IN 6 SUBPHASES AS SHOWN AND INSTALL PERMANENT SIGNALS WHEN ABLE.
3. EXISTING STRIPING REMOVALS ARE DESCRIBED BELOW:
   A. ON EXISTING LOOP 20, ALL EASTBOUND STRIPING FROM STATION 491+00 TO STATION 509+50.
   B. ON EXISTING LOOP 20, CENTER LANE LINE FROM STATION 506+00 TO STATION 514+00.

IH35
1. REMOVE DETOURS "35S1D" AND "35N1B".
2. CONSTRUCT IH35 SOUTHBOUND MAIN LANES AND ADJOINING RAMPS.
3. COMPLETE CONSTRUCTION OF IH35 EAST FRONTAGE ROAD AND IH35 NORTHBOUND ENTRANCE RAMP.
4. EXISTING STRIPING REMOVALS ARE DESCRIBED BELOW:
   A. NORTHBOUND BROKEN LANE LINE FROM STATION 90+00 TO STATION 93+85.
   B. SOUTHBOUND INSIDE SHOULDER FROM STATION 94+65 TO STATION 99+00 AND FROM STATION 184+00 TO STATION 187+00.

FINAL TRAFFIC OPERATIONS

GENERAL
1. UTILIZE TCP STANDARDS FOR MISCELLANEOUS LANE CLOSURES.
2. PLACE TRAFFIC IN FINAL POSITIONS.

LP20
1. OPEN THE LOOP 20 WESTBOUND FRONTAGE ROAD AND GRAND CENTRAL BLVD. TO TRAFFIC.

IH35
1. OPEN THE IH35 EAST FRONTAGE ROAD TO TRAFFIC.
2. OPEN THE IH35 SOUTHBOUND MAIN LANES.
3. OPEN ALL REMAINING PROPOSED IH35 RAMPS.

FINAL CONSTRUCTION OPERATIONS

GENERAL
1. COMPLETE CURB AND GUTTER SECTIONS LEFT OUT TO ACCOMMODATE DETOURS AND ANY OTHER INCIDENTALS.
2. PLACE FINAL STRIPING WHERE REQUIRED.

LP20
1. PLACE FINAL COURSE OF ASHPALTIC CONCRETE PAVEMENT WHERE REQUIRED.
2. REMOVE DETOURS "20W3A" AND "20W3B".

IH35
1. REMOVE DETOUR "35S1B".

STATE OF TEXAS
JEFFERY T. SEALER
77187
REGISTERED PROFESSIONAL ENGINEER

Jeffery T. Sealer
5-6-99

DATE	BY	REV	REVISION

© 1999 Texas Department of Transportation

Brown & Root
HOUSTON, TEXAS

RODRIGUEZ & HUGGINS, INC.
CONSULTING ENGINEERS
11824 JOLLYVILLE ROAD SUITE 402
AUSTIN, TEXAS 78759
PHONE: 512 335 1754 FAX: 512 335 1799

LOOP 20/IH35

SEQUENCE OF CONSTRUCTION

SHEET 2 OF 2

FED RD DIV NO	STATE PROJECT NO		SHEET NO
6			80
STATE	STATE DIST NO		COUNTY
TEXAS	22		WEBB
CONT	SECT	JOB	HIGHWAY NO
0086	14	023	LOOP 20
0018	06	131	

p:\80903\mlo interchange\div\mlloseq

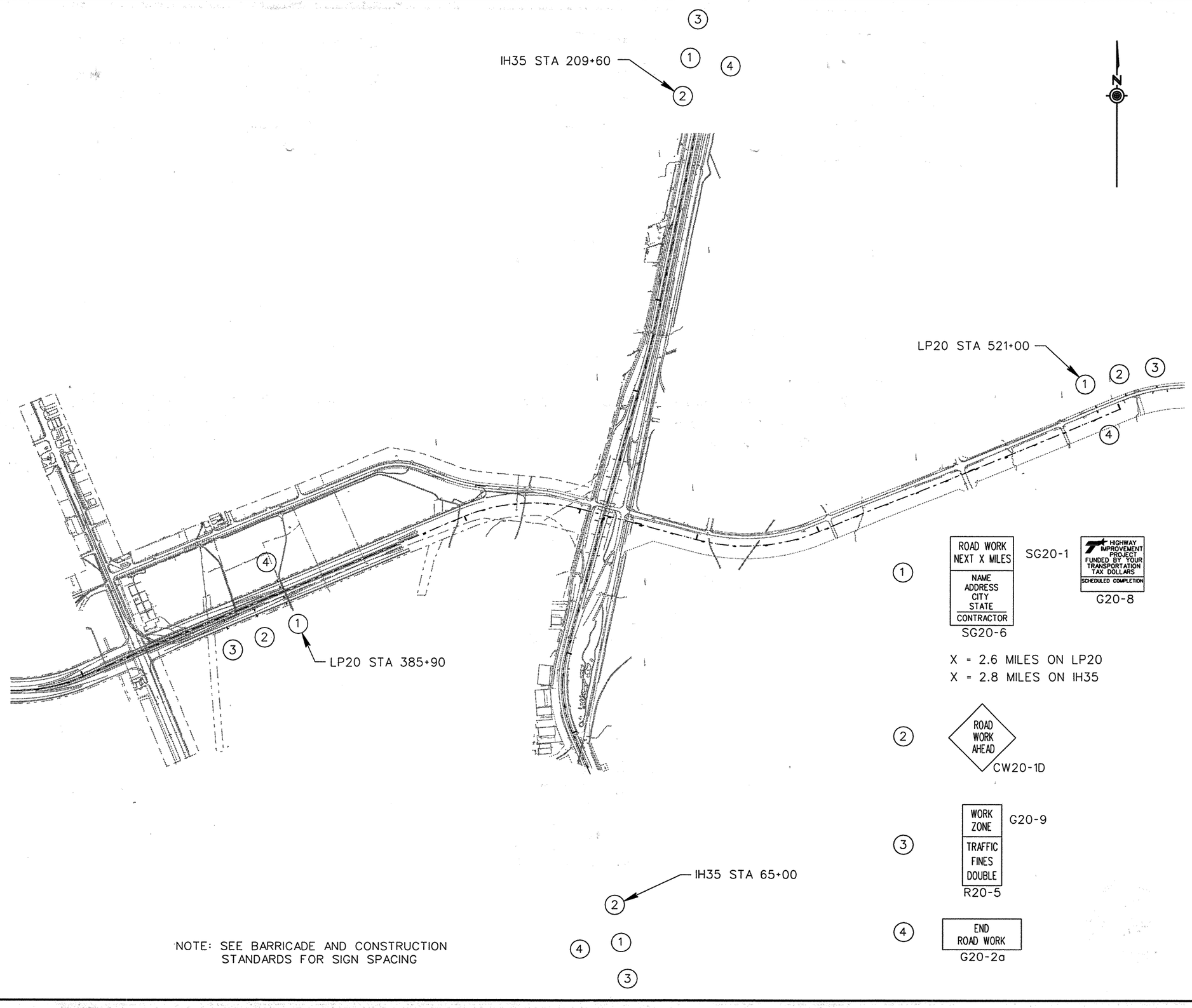

1. ROAD WORK NEXT X MILES / NAME ADDRESS CITY STATE / CONTRACTOR — SG20-6; SG20-1; HIGHWAY IMPROVEMENT PROJECT FUNDED BY YOUR TRANSPORTATION TAX DOLLARS / SCHEDULED COMPLETION — G20-8

X = 2.6 MILES ON LP20
X = 2.8 MILES ON IH35

2. ROAD WORK AHEAD — CW20-1D

3. WORK ZONE / TRAFFIC FINES DOUBLE — R20-5; G20-9

4. END ROAD WORK — G20-2a

NOTE: SEE BARRICADE AND CONSTRUCTION STANDARDS FOR SIGN SPACING

STATE OF TEXAS
JEFFERY T. SEILER
77187
REGISTERED PROFESSIONAL ENGINEER

Jeffery T. Seiler
5-6-99

DATE	BY	REV	REVISION

© 1999 Texas Department of Transportation

Brown & Root
HOUSTON, TEXAS

RODRIGUEZ & HUGGINS, INC.
CONSULTING ENGINEERS
11824 JOLLYVILLE ROAD SUITE 402
AUSTIN, TEXAS 78759
PHONE: 512 335 1754 FAX: 512 335 1799

LP20/IH35

TRAFFIC CONTROL PLAN ADVANCED SIGNING LAYOUT

SHEET 1 OF 1

FED RD DIV NO	STATE PROJECT NO		SHEET NO
6			81
STATE	STATE DIST NO		COUNTY
TEXAS	22		WEBB
CONT	SECT	JOB	HIGHWAY NO
0086	14	023	LOOP 20
0018	06	131	

p:\80903\mlb interchange\dlv\mltcss

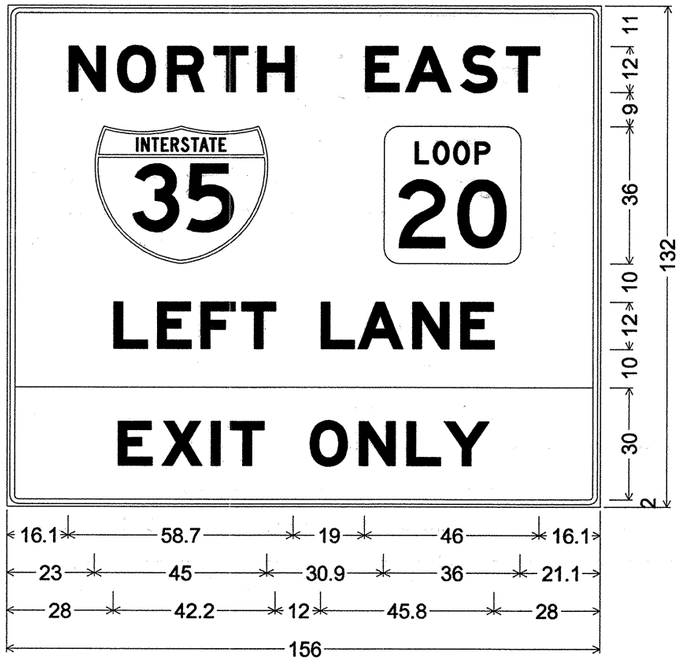

3.0" Radius, 1.3" Border, 0.8" Indent, Black on Orange

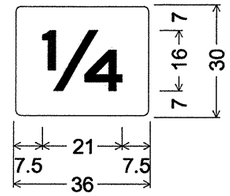

1.9" Radius, Black on Orange

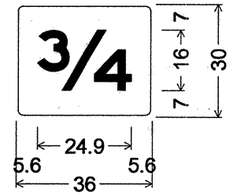

1.9" Radius, Black on Orange

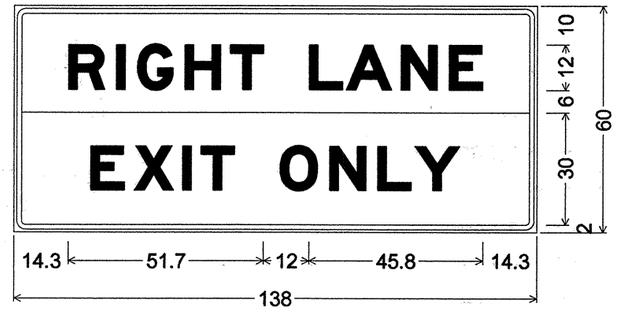

3.0" Radius, 1.2" Border, 0.8" Indent, Black on Orange

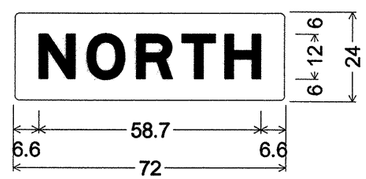

1.5" Radius, Black on Orange

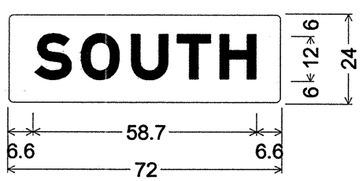

1.5" Radius, Black on Orange

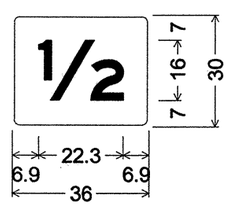

1.9" Radius, Black on Orange

STATE OF TEXAS
JEFFERY T. SEILER
77187
REGISTERED
PROFESSIONAL ENGINEER

Jeffery T. Seiler
5-12-99

DATE	BY	REV	REVISION

© 1999 Texas Department of Transportation

Brown & Root
HOUSTON, TEXAS

RODRIGUEZ & HUGGINS, INC.
CONSULTING ENGINEERS
11824 JOLLYVILLE ROAD SUITE 402
AUSTIN, TEXAS 78759
PHONE: 512 335 1754 FAX: 512 335 1799

LOOP 20/IH35

TRAFFIC CONTROL PLAN
CONSTRUCTION SIGN DETAILS

SHEET 1 OF 2

FED RD DIV NO	STATE PROJECT NO		SHEET NO
6			82
STATE	STATE DIST NO		COUNTY
TEXAS	22		WEBB
CONT	SECT	JOB	HIGHWAY NO
0086	14	023	LOOP 20
0018	06	131	

p:\80903\mlo interchange\dir\mligps01

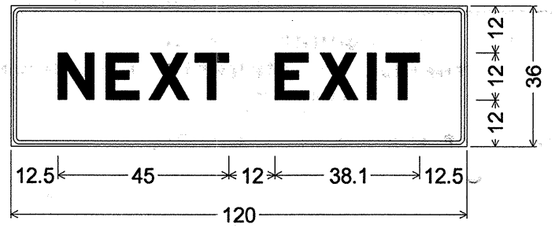

2.2" Radius, 0.9" Border, 0.6" Indent, Black on Orange

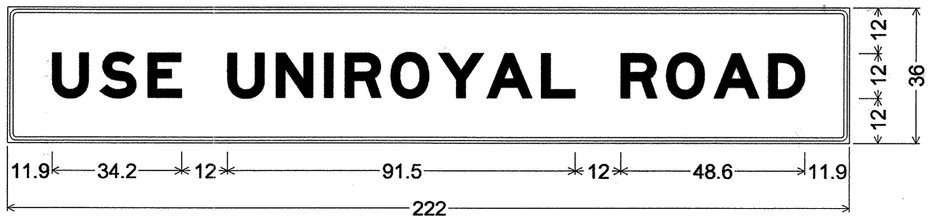

2.2" Radius, 0.9" Border, 0.6" Indent, Black on Orange

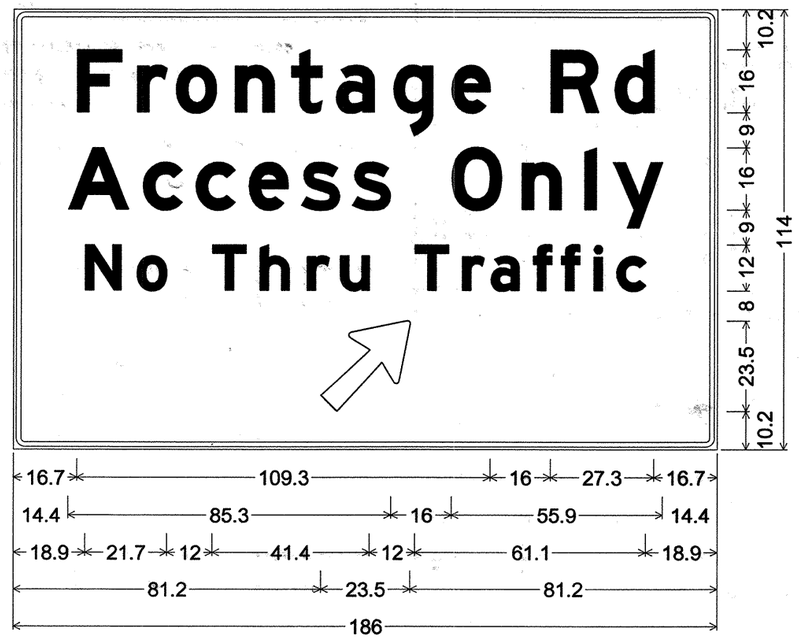

3.0" Radius, 1.2" Border, 0.8" Indent, Black on Orange
Arrow 133 - 30.0" 45°

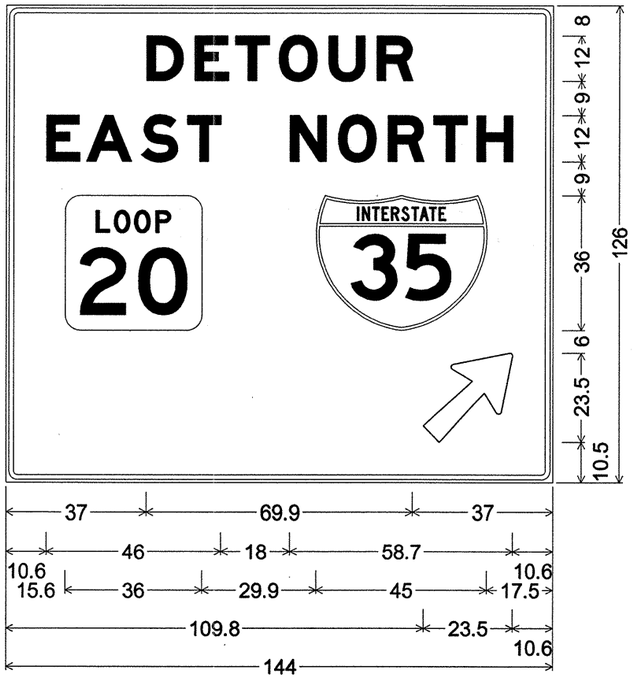

3.0" Radius, 1.3" Border, 0.8" Indent, Black on Orange;
Arrow 133 - 30.0" 45°

DATE	BY	REV	REVISION

© 1999 Texas Department of Transportation

Brown & Root
HOUSTON, TEXAS

RODRIGUEZ & HUGGINS, INC.
CONSULTING ENGINEERS
11824 JOLLYVILLE ROAD SUITE 402
AUSTIN, TEXAS 78759
PHONE: 512 335 1754 FAX: 512 335 1799

LOOP 20/IH35

TRAFFIC CONTROL PLAN
CONSTRUCTION SIGN DETAILS

SHEET 2 OF 2

FED RD DIV NO	STATE PROJECT NO		SHEET NO
6			83
STATE	STATE DIST NO		COUNTY
TEXAS	22		WEBB
CONT	SECT	JOB	HIGHWAY NO
0086	14	023	LOOP 20
0018	06	131	

STATE OF TEXAS
JEFFERY T. SEILER
77187
REGISTERED PROFESSIONAL ENGINEER

Jeffery T. Seiler
5-6-99

p:\80903\milo_interchange\div\milgsd02

PHASE I DETOUR ALIGNMENTS

DETOUR 3464RR HORIZONTAL ALIGNMENT DESCRIPTION

PI X 662,274.91 Y 17,111,577.70 Sta 1+00.00

Course from PI to PC-1 S 74° 48′ 57.62″ E Dist 6.43

Curve Data

Curve-1					
PI Station	2+32.81	X	662,403.08	Y	17,111,542.91
Delta	= 23° 16′ 13.27″ (LT)				
Degree	= 9° 20′ 07.30″				
Tangent	= 126.38				
Length	= 249.27				
Radius	= 613.75				
External	= 12.88				
Long Chord	= 247.56				
Mid. Ord.	= 12.61				
P.C. Station	1+06.43	X	662,281.12	Y	17,111,576.01
P.T. Station	3+55.70	X	662,528.20	Y	17,111,560.69
C.C.		X	662,441.87	Y	17,112,168.34
Back	= S 74° 48′ 57.62″ E				
Ahead	= N 81° 54′ 49.11″ E				
Chord Bear	= S 86° 27′ 04.25″ E				

Curve Data

Curve-2					
PI Station	6+02.00	X	662,772.05	Y	17,111,595.33
Delta	= 45° 34′ 36.88″ (RT)				
Degree	= 9° 46′ 23.76″				
Tangent	= 246.30				
Length	= 466.34				
Radius	= 586.25				
External	= 49.64				
Long Chord	= 454.14				
Mid. Ord.	= 45.76				
P.C. Station	3+55.70	X	662,528.20	Y	17,111,560.69
P.T. Station	8+22.04	X	662,967.48	Y	17,111,445.43
C.C.		X	662,610.67	Y	17,110,980.27
Back	= N 81° 54′ 49.11″ E				
Ahead	= S 52° 30′ 34.01″ E				
Chord Bear	= S 75° 17′ 52.45″ E				

Curve Data

Curve-3					
PI Station	9+42.74	X	663,063.24	Y	17,111,371.97
Delta	= 22° 15′ 01.95″ (LT)				
Degree	= 9° 20′ 07.30″				
Tangent	= 120.69				
Length	= 238.35				
Radius	= 613.75				
External	= 11.75				
Long Chord	= 236.85				
Mid. Ord.	= 11.53				
P.C. Station	8+22.04	X	662,967.48	Y	17,111,445.43
P.T. Station	10+60.39	X	663,179.69	Y	17,111,340.25
C.C.		X	663,341.02	Y	17,111,932.41
Back	= S 52° 30′ 34.01″ E				
Ahead	= S 74° 45′ 35.96″ E				
Chord Bear	= S 63° 38′ 04.99″ E				

Course from PT-3 to PI S 74° 45′ 35.96″ E Dist 24.61

PI X 663,203.43 Y 17,111,333.78 Sta 10+85.00

DETOUR 20W1A HORIZONTAL ALIGNMENT DESCRIPTION

PI X 666,252.76 Y 17,111,313.53 Sta 480+00.00

Course from PI to PC-1 N 67° 21′ 24.22″ E Dist 28.08

Curve Data

Curve-1					
PI Station	482+41.19	X	666,475.36	Y	17,111,406.39
Delta	= 25° 09′ 43.70″ (LT)				
Degree	= 6° 00′ 00.67″				
Tangent	= 213.11				
Length	= 419.36				
Radius	= 954.90				
External	= 23.49				
Long Chord	= 415.99				
Mid. Ord.	= 22.93				
P.C. Station	480+28.08	X	666,278.67	Y	17,111,324.34
P.T. Station	484+47.43	X	666,618.50	Y	17,111,564.28
C.C.		X	665,911.04	Y	17,112,205.63
Back	= N 67° 21′ 24.23″ E				
Ahead	= N 42° 11′ 40.52″ E				
Chord Bear	= N 54° 46′ 32.38″ E				

Course from PT-1 to PC-2 N 42° 11′ 40.52″ E Dist 272.22

Curve Data

Curve-2					
PI Station	489+30.23	X	666,942.77	Y	17,111,921.97
Delta	= 24° 31′ 24.76″ (RT)				
Degree	= 5° 54′ 48.55″				
Tangent	= 210.58				
Length	= 414.71				
Radius	= 968.90				
External	= 22.62				
Long Chord	= 411.55				
Mid. Ord.	= 22.10				
P.C. Station	487+19.66	X	666,801.34	Y	17,111,765.96
P.T. Station	491+34.36	X	667,136.20	Y	17,112,005.20
C.C.		X	667,519.16	Y	17,111,115.19
Back	= N 42° 11′ 40.52″ E				
Ahead	= N 66° 43′ 05.28″ E				
Chord Bear	= N 54° 27′ 22.90″ E				

Course from PT-2 to PI N 66° 43′ 05.28″ E Dist 120.25

PI X 667,246.66 Y 17,112,052.73 Sta 492+54.61

PHASE III DETOUR ALIGNMENTS

DETOUR 20W3A HORIZONTAL ALIGNMENT DESCRIPTION

Curve Data

Curve-1					
P.I. Station	424+71.19	X	660,823.46	Y	17,111,672.53
Delta	= 27° 34′ 26.76″ (RT)				
Degree	= 5° 00′ 00.00″				
Tangent	= 281.19				
Length	= 551.48				
Radius	= 1,145.92				
External	= 34.00				
Long Chord	= 546.18				
Mid. Ord.	= 33.02				
P.C. Station	421+90.00	X	660,548.71	Y	17,111,612.70
P.T. Station	427+41.48	X	661,094.70	Y	17,111,598.38
C.C.		X	660,792.53	Y	17,110,493.02
Back	= N 77° 42′ 54.32″ E				
Ahead	= S 74° 42′ 38.93″ E				
Chord Bear	= S 88° 29′ 52.30″ E				

Course from PT-1 to PC-2 S 74° 42′ 38.93″ E Dist 368.86

Curve Data

Curve-2					
P.I. Station	431+71.99	X	661,509.96	Y	17,111,484.86
Delta	= 6° 09′ 31.71″ (LT)				
Degree	= 5° 00′ 00.00″				
Tangent	= 61.65				
Length	= 123.18				
Radius	= 1,145.92				
External	= 1.66				
Long Chord	= 123.12				
Mid. Ord.	= 1.65				
P.C. Station	431+10.34	X	661,450.50	Y	17,111,501.11
P.T. Station	432+33.52	X	661,570.83	Y	17,111,475.08
C.C.		X	661,752.67	Y	17,112,606.47
Back	= S 74° 42′ 38.93″ E				
Ahead	= S 80° 52′ 10.64″ E				
Chord Bear	= S 77° 47′ 24.78″ E				

Curve Data

Curve-3					
P.I. Station	432+58.70	X	661,595.69	Y	17,111,471.08
Delta	= 1° 05′ 12.66″ (RT)				
Degree	= 2° 09′ 29.07″				
Tangent	= 25.18				
Length	= 50.36				
Radius	= 2,654.95				
External	= 0.12				
Long Chord	= 50.36				
Mid. Ord.	= 0.12				
P.C. Station	432+33.52	X	661,570.83	Y	17,111,475.08
P.T. Station	432+83.88	X	661,620.48	Y	17,111,466.61
C.C.		X	661,149.54	Y	17,108,853.77
Back	= S 80° 52′ 10.64″ E				
Ahead	= S 79° 46′ 57.98″ E				
Chord Bear	= S 80° 19′ 34.31″ E				

STATE OF TEXAS
JEFFERY T. SEILER
77187
REGISTERED PROFESSIONAL ENGINEER

Jeffery T. Seiler
5-6-99

NOTE: TYPICALLY DETOURS ARE NAMED AS SUCH:

20W1A

ASSOCIATED ROADWAY

TRAVEL DIRECTION

OCCURANCE BEGINNING DOWN STATION (A IS 1ST, B IS 2ND, ETC.)

PHASE (CAN BE TWO CHARACTERS)

DATE	BY	REV	REVISION

© 1999 Texas Department of Transportation

Brown & Root
HOUSTON, TEXAS

RNH
RODRIGUEZ & HUGGINS, INC.
CONSULTING ENGINEERS
11824 JOLLYVILLE ROAD SUITE 402
AUSTIN, TEXAS 78759
PHONE: 512 335 1754 FAX: 512 335 1799

LOOP 20

TRAFFIC CONTROL PLAN
DETOUR HORIZONTAL ALIGNMENT DATA

SHEET 1 OF 1

FED RD DIV NO	STATE PROJECT NO		SHEET NO
6			84
STATE	STATE DIST NO	COUNTY	
TEXAS	22	WEBB	
CONT	SECT	JOB	HIGHWAY NO
0086	14	023	LOOP 20

P:\809023\mile interchange\div\mile14A

PHASE I DETOUR ALIGNMENTS

DETOUR 35S1A HORIZONTAL ALIGNMENT DESCRIPTION

Curve Data

Curve-1						
P.I. Station		101+26.83	X	661,504.58	Y	17,108,555.73
Delta	=	37° 54′ 44.39″ (RT)				
Degree	=	2° 57′ 52.31″				
Tangent	=	663.83				
Length	=	1,278.86				
Radius	=	1,932.71				
External	=	110.83				
Long Chord	=	1,255.66				
Mid. Ord.	=	104.82				
P.C. Station		94+63.00	X	661,767.07	Y	17,107,946.00
P.T. Station		107+41.86	X	661,672.15	Y	17,109,198.07
C.C.			X	663,542.27	Y	17,108,710.22
Back	= N	23° 17′ 30.43″ W				
Ahead	= N	14° 37′ 13.96″ E				
Chord Bear	= N	4° 20′ 08.24″ W				

Course from PT-1 to 9100 N 14° 25′ 17.13″ E Dist 60.90

PI X 661,687.31 Y 17,109,257.05 Sta 108+02.76

DETOUR 35N1A HORIZONTAL ALIGNMENT DESCRIPTION

Curve Data

Curve-1						
P.I. Station		106+94.49	X	661,636.13	Y	17,109,165.06
Delta	=	40° 37′ 54.10″ (RT)				
Degree	=	4° 45′ 03.22″				
Tangent	=	446.49				
Length	=	855.24				
Radius	=	1,206.00				
External	=	80.00				
Long Chord	=	837.43				
Mid. Ord.	=	75.02				
P.C. Station		102+48.00	X	661,661.60	Y	17,108,719.30
P.T. Station		111+03.24	X	661,907.07	Y	17,109,519.94
C.C.			X	662,865.63	Y	17,108,788.10
Back	= N	3° 16′ 13.38″ W				
Ahead	= N	37° 21′ 40.73″ E				
Chord Bear	= N	17° 02′ 43.67″ E				

Curve Data

Curve-2						
P.I. Station		112+54.66	X	661,998.96	Y	17,109,640.30
Delta	=	7° 20′ 31.12″ (LT)				
Degree	=	2° 25′ 39.66″				
Tangent	=	151.42				
Length	=	302.43				
Radius	=	2,360.10				
External	=	4.85				
Long Chord	=	302.22				
Mid. Ord.	=	4.84				
P.C. Station		111+03.24	X	661,907.07	Y	17,109,519.94
P.T. Station		114+05.67	X	662,074.72	Y	17,109,771.41
C.C.			X	660,031.21	Y	17,110,952.15
Back	= N	37° 21′ 40.73″ E				
Ahead	= N	30° 01′ 09.61″ E				
Chord Bear	= N	33° 41′ 25.17″ E				

Course from PT-2 to 8300 N 30° 01′ 09.61″ E Dist 94.33

PI X 662,121.91 Y 17,109,853.08 Sta 115+00.00

DETOUR 35S1B HORIZONTAL ALIGNMENT DESCRIPTION

PI X 661,554.22 Y 17,108,870.02 Sta 104+00.00

Course from PI to PC-1 N 3° 03′ 43.22″ E Dist 29.99

Curve Data

Curve-1						
P.I. Station		105+33.23	X	661,561.33	Y	17,109,003.06
Delta	=	10° 17′ 47.65″ (LT)				
Degree	=	5° 00′ 00.00″				
Tangent	=	103.24				
Length	=	205.93				
Radius	=	1,145.92				
External	=	4.64				
Long Chord	=	205.65				
Mid. Ord.	=	4.62				
P.C. Station		104+29.99	X	661,555.82	Y	17,108,899.96
P.T. Station		106+35.92	X	661,548.33	Y	17,109,105.48
C.C.			X	660,411.54	Y	17,108,961.17
Back	= N	3° 03′ 43.22″ E				
Ahead	= N	7° 14′ 04.43″ W				
Chord Bear	= N	2° 05′ 10.61″ W				

Curve Data

Curve-2						
P.I. Station		108+61.61	X	661,519.91	Y	17,109,329.37
Delta	=	22° 17′ 02.75″ (RT)				
Degree	=	5° 00′ 00.00″				
Tangent	=	225.69				
Length	=	445.68				
Radius	=	1,145.92				
External	=	22.01				
Long Chord	=	442.88				
Mid. Ord.	=	21.60				
P.C. Station		106+35.92	X	661,548.33	Y	17,109,105.48
P.T. Station		110+81.60	X	661,578.51	Y	17,109,547.33
C.C.			X	662,685.12	Y	17,109,249.79
Back	= N	7° 14′ 04.43″ W				
Ahead	= N	15° 02′ 58.32″ E				
Chord Bear	= N	3° 54′ 26.95″ E				

DETOUR 35S1C HORIZONTAL ALIGNMENT DESCRIPTION

Curve Data

Curve-1						
P.I. Station		179+41.04	X	663,412.79	Y	17,116,185.11
Delta	=	3° 48′ 35.74″ (LT)				
Degree	=	0° 30′ 00.00″				
Tangent	=	381.13				
Length	=	761.99				
Radius	=	11,459.16				
External	=	6.34				
Long Chord	=	761.85				
Mid. Ord.	=	6.33				
P.C. Station		175+59.91	X	663,337.20	Y	17,115,811.55
P.T. Station		183+21.90	X	663,463.38	Y	17,116,562.87
C.C.			X	652,105.65	Y	17,118,084.11
Back	= N	11° 26′ 19.05″ E				
Ahead	= N	7° 37′ 43.30″ E				
Chord Bear	= N	9° 32′ 01.17″ E				

Course from PT-1 to PC-2 N 7° 37′ 43.30″ E Dist 121.94

Curve Data

Curve-2						
P.I. Station		188+33.85	X	663,531.35	Y	17,117,070.29
Delta	=	3° 53′ 54.93″ (RT)				
Degree	=	0° 30′ 00.00″				
Tangent	=	390.01				
Length	=	779.72				
Radius	=	11,459.16				
External	=	6.64				
Long Chord	=	779.57				
Mid. Ord.	=	6.63				
P.C. Station		184+43.84	X	663,479.57	Y	17,116,683.74
P.T. Station		192+23.56	X	663,609.28	Y	17,117,452.44
C.C.			X	674,837.30	Y	17,115,162.50
Back	= N	7° 37′ 43.30″ E				
Ahead	= N	11° 31′ 38.23″ E				
Chord Bear	= N	9° 34′ 40.77″ E				

DETOUR 35N1B HORIZONTAL ALIGNMENT DESCRIPTION

PI X 663,760.11 Y 17,117,399.07 Sta 192+00.00

Course from PI to PC-1 N 11° 26′ 52.10″ E Dist 31.95

Curve Data

Curve-1						
P.I. Station		192+51.83	X	663,770.40	Y	17,117,449.88
Delta	=	22° 29′ 27.92″ (LT)				
Degree	=	57° 17′ 44.81″				
Tangent	=	19.88				
Length	=	39.25				
Radius	=	100.00				
External	=	1.96				
Long Chord	=	39.00				
Mid. Ord.	=	1.92				
P.C. Station		192+31.95	X	663,766.45	Y	17,117,430.39
P.T. Station		192+71.20	X	663,766.59	Y	17,117,469.39
C.C.			X	663,668.44	Y	17,117,450.24
Back	= N	11° 26′ 52.09″ E				
Ahead	= N	11° 02′ 35.83″ W				
Chord Bear	= N	0° 12′ 08.13″ E				

Curve Data

Curve-2						
P.I. Station		193+61.86	X	663,749.22	Y	17,117,558.37
Delta	=	18° 20′ 19.42″ (RT)				
Degree	=	10° 12′ 06.43″				
Tangent	=	90.66				
Length	=	179.76				
Radius	=	561.63				
External	=	7.27				
Long Chord	=	178.99				
Mid. Ord.	=	7.18				
P.C. Station		192+71.20	X	663,766.59	Y	17,117,469.39
P.T. Station		194+50.96	X	663,760.74	Y	17,117,648.29
C.C.			X	664,317.81	Y	17,117,576.97
Back	= N	11° 02′ 35.83″ W				
Ahead	= N	7° 17′ 43.59″ E				
Chord Bear	= N	1° 52′ 26.12″ W				

Course from PT-2 to PC-3 N 7° 17′ 43.59″ E Dist 299.26

Curve Data

Curve-3						
P.I. Station		198+48.52	X	663,811.22	Y	17,118,042.63
Delta	=	3° 55′ 49.27″ (RT)				
Degree	=	2° 00′ 00.00″				
Tangent	=	98.30				
Length	=	196.52				
Radius	=	2,864.79				
External	=	1.69				
Long Chord	=	196.48				
Mid. Ord.	=	1.68				
P.C. Station		197+50.22	X	663,798.74	Y	17,117,945.12
P.T. Station		199+46.74	X	663,830.36	Y	17,118,139.04
C.C.			X	666,640.33	Y	17,117,581.34
Back	= N	7° 17′ 43.59″ E				
Ahead	= N	11° 13′ 32.87″ E				
Chord Bear	= N	9° 15′ 38.23″ E				

NOTE: TYPICALLY DETOURS ARE NAMED AS SUCH:

35S1A

- ASSOCIATED ROADWAY
- TRAVEL DIRECTION
- OCCURANCE BEGINNING DOWN STATION (A IS 1ST, B IS 2ND, ETC.)
- PHASE (CAN BE TWO CHARACTERS)

STATE OF TEXAS — JEFFERY T. SEILER — 77187 — REGISTERED PROFESSIONAL ENGINEER

5-6-99

DATE	BY	REV	REVISION

© 1999 Texas Department of Transportation

Brown & Root
HOUSTON, TEXAS

RODRIGUEZ & HUGGINS, INC.
CONSULTING ENGINEERS
11824 JOLLYVILLE ROAD SUITE 402
AUSTIN, TEXAS 78759
PHONE: 512 335 1764 FAX: 512 335 1799

IH 35

TRAFFIC CONTROL PLAN
DETOUR HORIZONTAL
ALIGNMENT DATA

SHEET 1 OF 2

FED RD DIV NO	STATE PROJECT NO		SHEET NO
6			85
STATE	STATE DIST NO		COUNTY
TEXAS	22		WEBB
CONT	SECT	JOB	HIGHWAY NO
0018	05	057	LOOP 20

P:\80903\valo interchange\dlv\vmlistA

PHASE I DETOUR ALIGNMENTS

DETOUR 35S1D HORIZONTAL ALIGNMENT DESCRIPTION

Curve Data

```
Curve-1
P.I.  Station          177+38.15  X        663,238.40  Y        17,116,019.30
Delta        =     5° 31' 18.11" (RT)
Degree       =     2° 00' 00.00"
Tangent      =            138.15
Length       =            276.08
Radius       =         2,864.79
External     =              3.33
Long Chord   =            275.98
Mid. Ord.    =              3.33
P.C.  Station          176+00.00  X        663,210.95  Y        17,115,883.90
P.T.  Station          178+76.08  X        663,278.75  Y        17,116,151.42
C.C.                              X        666,018.62  Y        17,115,314.67
Back         = N  11° 27' 39.43" E
Ahead        = N  16° 58' 57.54" E
Chord Bear   = N  14° 13' 18.49" E
```

Curve Data

```
Curve-2
P.I.  Station          179+76.66  X        663,308.13  Y        17,116,247.61
Delta        =     4° 01' 16.78" (LT)
Degree       =     2° 00' 00.00"
Tangent      =            100.57
Length       =            201.07
Radius       =         2,864.79
External     =              1.76
Long Chord   =            201.03
Mid. Ord.    =              1.76
P.C.  Station          178+76.08  X        663,278.75  Y        17,116,151.42
P.T.  Station          180+77.15  X        663,330.69  Y        17,116,345.62
C.C.                              X        660,538.89  Y        17,116,988.17
Back         = N  16° 58' 57.54" E
Ahead        = N  12° 57' 40.76" E
Chord Bear   = N  14° 58' 19.15" E
```

Course from PT-2 to PC-3 N 12° 57' 40.76" E Dist 418.03

Curve Data

```
Curve-3
P.I.  Station          185+95.20  X        663,446.88  Y        17,116,850.47
Delta        =     3° 59' 57.03" (RT)
Degree       =     2° 00' 00.00"
Tangent      =            100.02
Length       =            199.96
Radius       =         2,864.79
External     =              1.75
Long Chord   =            199.92
Mid. Ord.    =              1.74
P.C.  Station          184+95.18  X        663,424.45  Y        17,116,753.00
P.T.  Station          186+95.14  X        663,476.06  Y        17,116,946.14
C.C.                              X        666,216.25  Y        17,116,110.45
Back         = N  12° 57' 40.76" E
Ahead        = N  16° 57' 37.79" E
Chord Bear   = N  14° 57' 39.28" E
```

Course from PT-3 to PC-4 N 16° 57' 37.79" E Dist 43.62

Curve Data

```
Curve-4
P.I.  Station          188+76.72  X        663,529.03  Y        17,117,119.83
Delta        =     5° 30' 51.00" (LT)
Degree       =     2° 00' 00.00"
Tangent      =            137.96
Length       =            275.71
Radius       =         2,864.79
External     =              3.32
Long Chord   =            275.60
Mid. Ord.    =              3.32
P.C.  Station          187+38.76  X        663,488.79  Y        17,116,987.87
P.T.  Station          190+14.47  X        663,556.41  Y        17,117,255.04
C.C.                              X        660,748.60  Y        17,117,823.56
Back         = N  16° 57' 37.79" E
Ahead        = N  11° 26' 46.79" E
Chord Bear   = N  14° 12' 12.29" E
```

PHASE IA DETOUR ALIGNMENTS

DETOUR 35N1AA HORIZONTAL ALIGNMENT DESCRIPTION

PI X 661,825.93 Y 17,108,012.02 Sta 95+00.00

Course from PI to PC-1 N 23° 13' 26.59" W Dist 165.47

Curve Data

```
Curve-1
P.I.  Station           97+22.68  X        661,738.12  Y        17,108,216.66
Delta        =     3° 25' 53.18" (RT)
Degree       =     2° 59' 59.20"
Tangent      =             57.21
Length       =            114.39
Radius       =         1,910.00
External     =              0.86
Long Chord   =            114.37
Mid. Ord.    =              0.86
P.C.  Station          96+65.47  X        661,760.68  Y        17,108,164.08
P.T.  Station          97+79.86  X        661,718.75  Y        17,108,270.49
C.C.                             X        663,515.92  Y        17,108,917.25
Back         = N  23° 13' 26.59" W
Ahead        = N  19° 47' 33.41" W
Chord Bear   = N  21° 30' 30.00" W
```

Curve Data

```
Curve-2
P.I.  Station         103+81.27  X        661,515.10  Y        17,108,836.38
Delta        =    34° 57' 22.80" (RT)
Degree       =     2° 59' 59.34"
Tangent      =            601.41
Length       =          1,165.28
Radius       =          1,909.98
External     =             92.45
Long Chord   =          1,147.29
Mid. Ord.    =             88.18
P.C.  Station          97+79.86  X        661,718.75  Y        17,108,270.49
P.T.  Station         109+45.14  X        661,672.42  Y        17,109,416.85
C.C.                             X        663,515.89  Y        17,108,917.24
Back         = N  19° 47' 33.41" W
Ahead        = N  15° 09' 49.39" E
Chord Bear   = N   2° 18' 52.01" W
```

DETOUR 35N1AB HORIZONTAL ALIGNMENT DESCRIPTION

PI X 663,176.37 Y 17,115,272.76 Sta 170+00.00

Course from PI to PC-1 N 11° 26' 24.06" E Dist 12.31

Curve Data

```
Curve-1
P.I.  Station         173+66.48  X        663,249.06  Y        17,115,631.96
Delta        =     3° 32' 26.25" (RT)
Degree       =     0° 30' 00.02"
Tangent      =            354.17
Length       =            708.12
Radius       =        11,459.00
External     =              5.47
Long Chord   =            708.00
Mid. Ord.    =              5.47
P.C.  Station         170+12.31  X        663,178.81  Y        17,115,284.83
P.T.  Station         177+20.43  X        663,340.61  Y        17,115,974.10
C.C.                             X        674,410.16  Y        17,113,012.03
Back         = N  11° 26' 24.06" E
Ahead        = N  14° 58' 50.31" E
Chord Bear   = N  13° 12' 37.18" E
```

Course from PT-1 to PC-2 N 14° 58' 50.31" E Dist 266.40

Curve Data

```
Curve-2
P.I.  Station         183+42.74  X        663,501.47  Y        17,116,575.26
Delta        =     3° 33' 28.66" (LT)
Degree       =     0° 30' 00.00"
Tangent      =            355.91
Length       =            711.59
Radius       =        11,459.16
External     =              5.53
Long Chord   =            711.48
Mid. Ord.    =              5.52
P.C.  Station         179+86.83  X        663,409.47  Y        17,116,231.44
P.T.  Station         186+98.42  X        663,571.96  Y        17,116,924.12
C.C.                             X        652,339.78  Y        17,119,193.55
Back         = N  14° 58' 50.31" E
Ahead        = N  11° 25' 21.65" E
Chord Bear   = N  13° 12' 05.98" E
```

PHASE IV DETOUR ALIGNMENTS

DETOUR 35S4A HORIZONTAL ALIGNMENT DESCRIPTION

PI X 661,790.85 Y 17,107,887.65 Sta 94+00.00

Course from PI to PC-1 N 23° 52' 53.81" W Dist 59.00

Curve Data

```
Curve-1
P.I.  Station         101+34.88  X        661,493.34  Y        17,108,559.60
Delta        =    38° 58' 26.14" (RT)
Degree       =     2° 59' 59.20"
Tangent      =            675.88
Length       =          1,299.23
Radius       =          1,910.00
External     =            116.06
Long Chord   =          1,274.32
Mid. Ord.    =            109.41
P.C.  Station          94+59.00  X        661,766.97  Y        17,107,941.59
P.T.  Station         107+58.23  X        661,669.32  Y        17,109,212.17
C.C.                             X        663,513.44  Y        17,108,714.85
Back         = N  23° 52' 53.81" W
Ahead        = N  15° 05' 32.33" E
Chord Bear   = N   4° 23' 40.74" W
```

Course from PT-1 to PI N 15° 05' 32.33" E Dist 47.91

PI X 661,681.80 Y 17,109,258.43 Sta 108+06.14

DETOUR 35S4B HORIZONTAL ALIGNMENT DESCRIPTION

Curve Data

```
Curve-1
P.I.  Station         175+32.67  X        663,330.14  Y        17,115,785.18
Delta        =     3° 06' 28.19" (LT)
Degree       =     0° 30' 00.00"
Tangent      =            310.86
Length       =            621.57
Radius       =        11,459.16
External     =              4.21
Long Chord   =            621.49
Mid. Ord.    =              4.21
P.C.  Station         172+21.81  X        663,268.53  Y        17,115,480.49
P.T.  Station         178+43.38  X        663,375.14  Y        17,116,092.76
C.C.                             X        652,036.70  Y        17,117,751.65
Back         = N  11° 25' 53.50" E
Ahead        = N   8° 19' 25.31" E
Chord Bear   = N   9° 52' 39.41" E
```

Course from PT-1 to PC-2 N 8° 19' 25.31" E Dist 427.85

Curve Data

```
Curve-2
P.I.  Station         185+84.64  X        663,482.45  Y        17,116,826.21
Delta        =     3° 07' 59.87" (RT)
Degree       =     0° 30' 00.00"
Tangent      =            313.41
Length       =            626.66
Radius       =        11,459.16
External     =              4.29
Long Chord   =            626.58
Mid. Ord.    =              4.28
P.C.  Station         182+71.23  X        663,437.08  Y        17,116,516.11
P.T.  Station         188+97.89  X        663,544.71  Y        17,117,133.38
C.C.                             X        674,775.53  Y        17,114,857.22
Back         = N   8° 19' 25.31" E
Ahead        = N  11° 27' 25.18" E
Chord Bear   = N   9° 53' 25.25" E
```

STATE OF TEXAS
JEFFERY T. SEILER
77187
REGISTERED PROFESSIONAL ENGINEER

Jeffery T. Seiler
5-6-99

NOTE: TYPICALLY DETOURS ARE NAMED AS SUCH:

35S1A

- 35 — ASSOCIATED ROADWAY
- S — TRAVEL DIRECTION
- 1 — OCCURANCE BEGINNING DOWN STATION (A IS 1ST, B IS 2ND, ETC.)
- A — PHASE (CAN BE TWO CHARACTERS)

DATE	BY	REV	REVISION

© 1999 Texas Department of Transportation

Brown & Root
HOUSTON, TEXAS

RNH
RODRIGUEZ & HUGGINS, INC.
CONSULTING ENGINEERS
11824 JOLLYVILLE ROAD SUITE 402
AUSTIN, TEXAS 78759
PHONE: 512 335 1754 FAX: 512 335 1799

IH 35

TRAFFIC CONTROL PLAN DETOUR HORIZONTAL ALIGNMENT DATA

SHEET 2 OF 2

FED RD DIV NO	STATE PROJECT NO		SHEET NO
6			86
STATE	STATE DIST NO		COUNTY
TEXAS	22		WEBB
CONT	SECT	JOB	HIGHWAY NO
0018	05	057	LOOP 20

P:\80903\rnlio interchange\dtv\vmlaIA

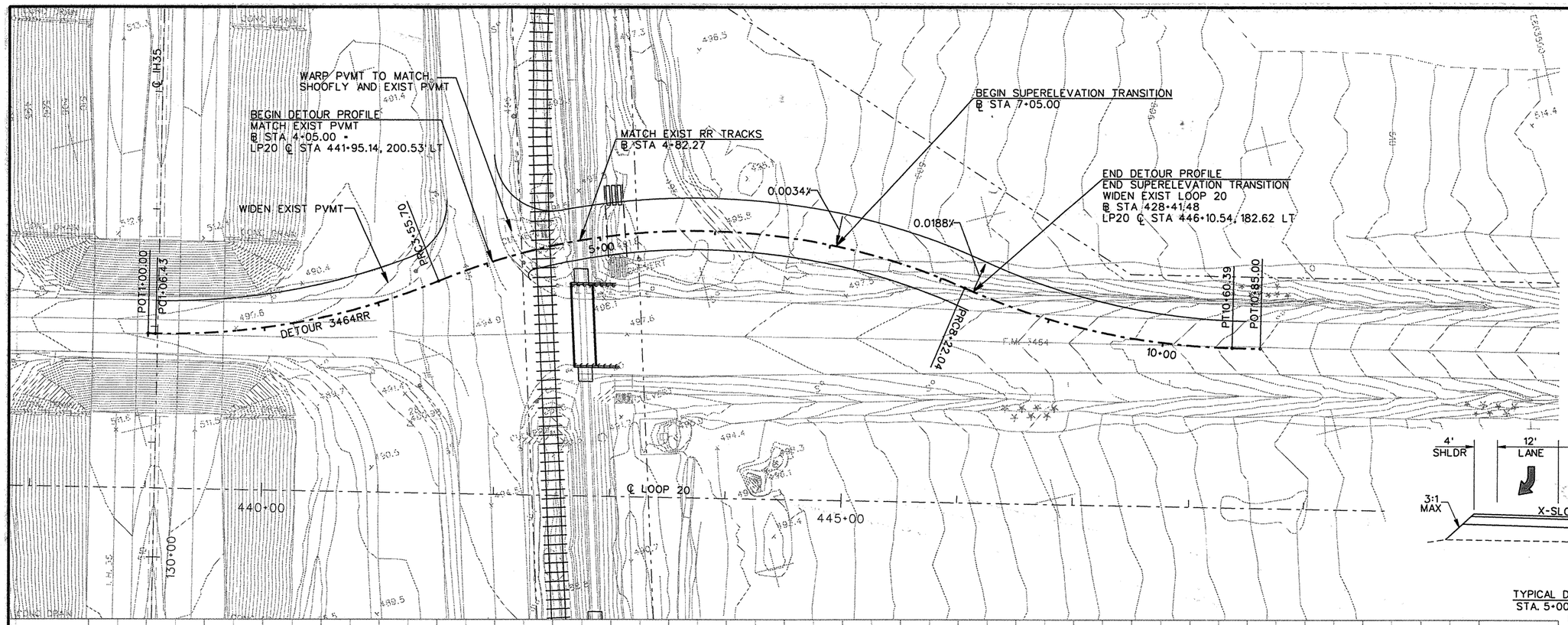

NOTES: SEE HORIZONTAL ALIGNMENT DATA SHEET FOR ALIGNMENT DETAILS.

SEE RAILROAD EXHIBITS FOR TEMPORARY RAILROAD SIGNAL INSTALLATION

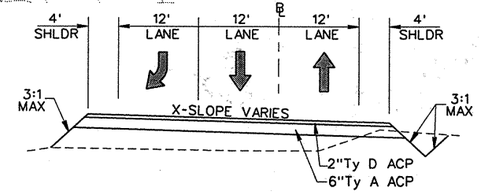

TYPICAL DETOUR SECTION
STA. 5+00 TO STA. 8+00
N.T.S.

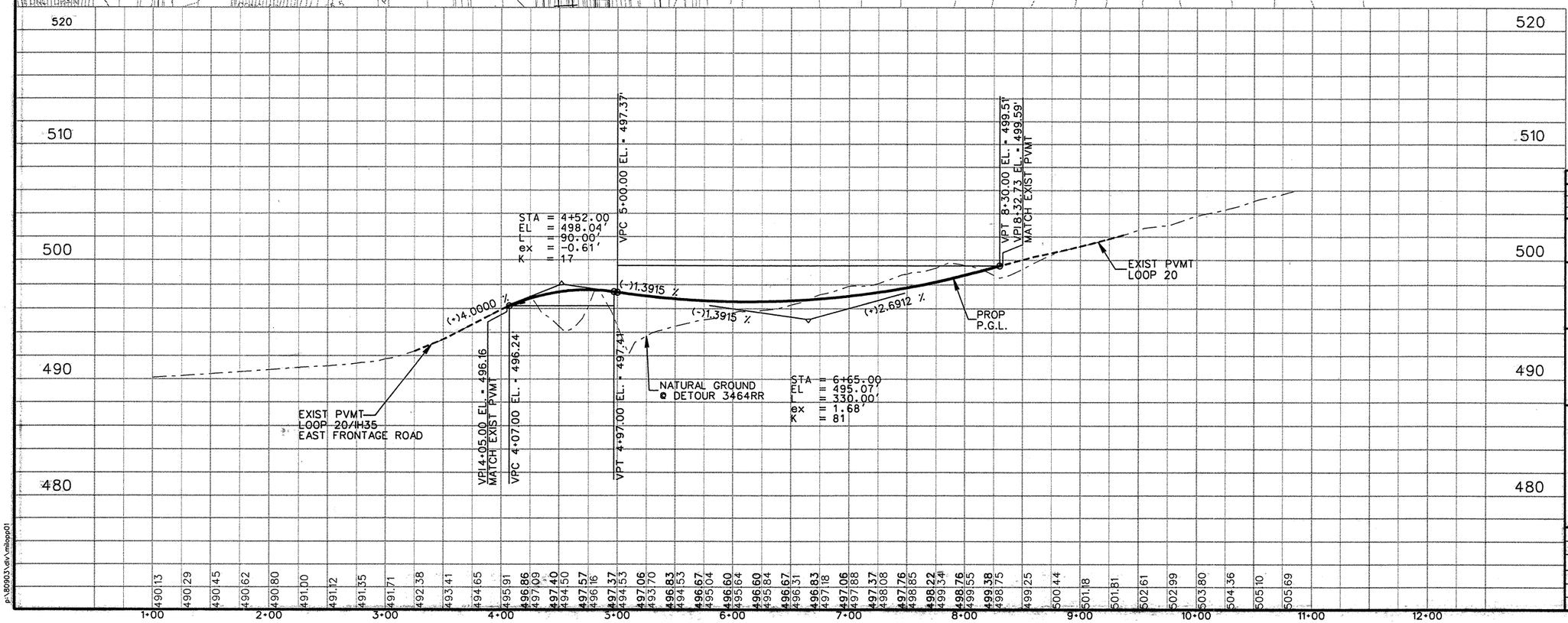

STATE OF TEXAS
JEFFERY T. SEILER
77187
REGISTERED PROFESSIONAL ENGINEER

Jeffery T. Seiler
5-6-99

DATE	BY	REV	REVISION

© 1999 Texas Department of Transportation

Brown & Root
HOUSTON, TEXAS

RODRIGUEZ & HUGGINS, INC.
CONSULTING ENGINEERS
11824 JOLLYVILLE ROAD SUITE 402
AUSTIN, TEXAS 78759
PHONE: 512 335 1754 FAX: 512 335 1799

LOOP 20
DETOUR PLAN AND PROFILE
3464RR

SCALE
VER 0 2.5 5 10
HOR 0 25 50 100

SHEET 1 OF 1

FED RD DIV NO	STATE PROJECT NO		SHEET NO
6.			87
STATE	STATE DIST NO		COUNTY
TEXAS	22		WEBB
CONT	SECT	JOB	HIGHWAY NO
0086	14	023	LOOP 20

p:\80903\dlv\mloop01

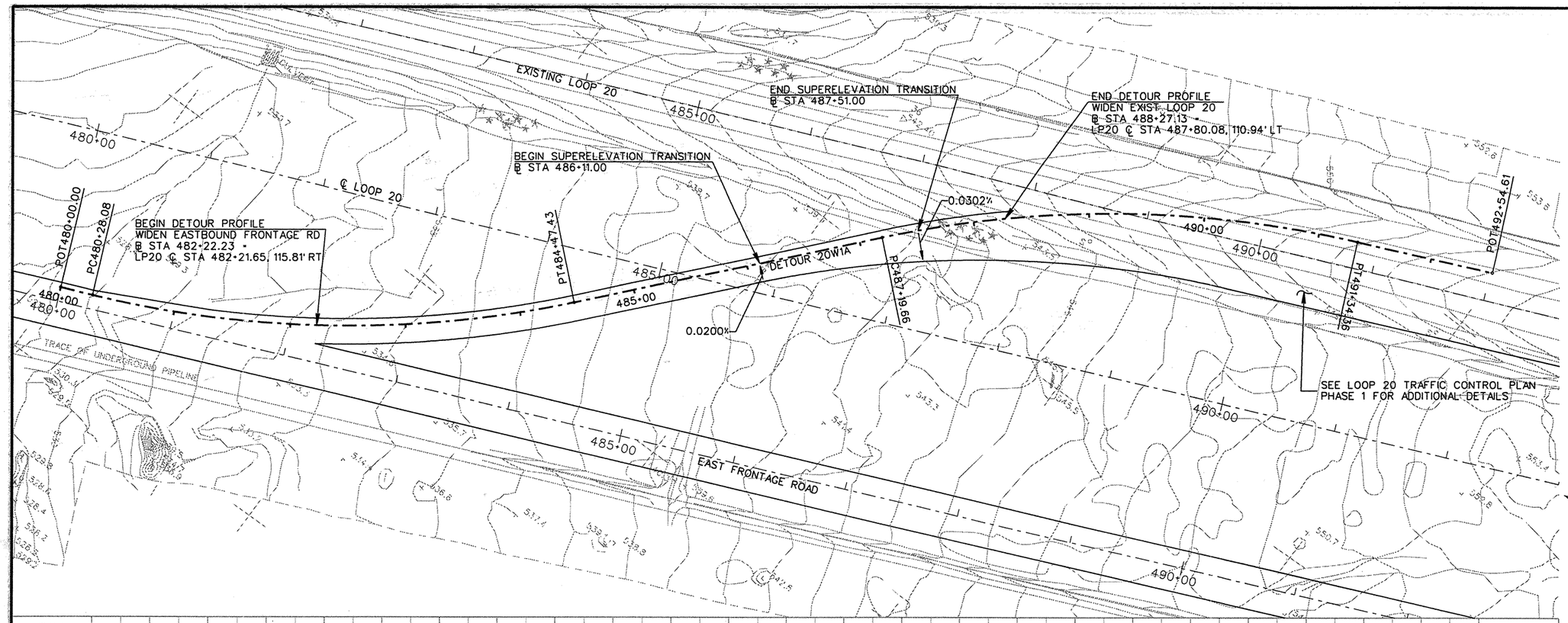

NOTE: SEE HORIZONTAL ALIGNMENT DATA SHEET FOR ALIGNMENT DETAILS.

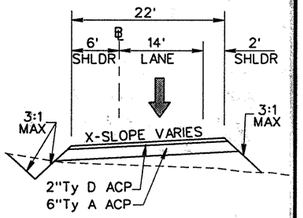

TYPICAL DETOUR SECTION
STA. 483+00 TO STA. 486+00
N.T.S.

STATE OF TEXAS
JEFFERY T. SEILER
77187
REGISTERED PROFESSIONAL ENGINEER

Jeffery T. Seiler
5-6-99

DATE	BY	REV	REVISION

© 1999 Texas Department of Transportation

Brown & Root
HOUSTON, TEXAS

RODRIGUEZ & HUGGINS, INC.
CONSULTING ENGINEERS
11824 JOLLYVILLE ROAD SUITE 402
AUSTIN, TEXAS 78759
PHONE: 512 335 1754 FAX: 512 335 1799

LOOP 20
DETOUR PLAN AND PROFILE
20W1A

SCALE
VER 0 2.5 5 10
HOR 0 25 50 100
SHEET 1 OF 1

FED RD DIV NO	STATE PROJECT NO		SHEET NO
6			88
STATE	STATE DIST NO		COUNTY
TEXAS	22		WEBB
CONT	SECT	JOB	HIGHWAY NO
0086	14	023	LOOP 20

p:\80903\div\milopp02

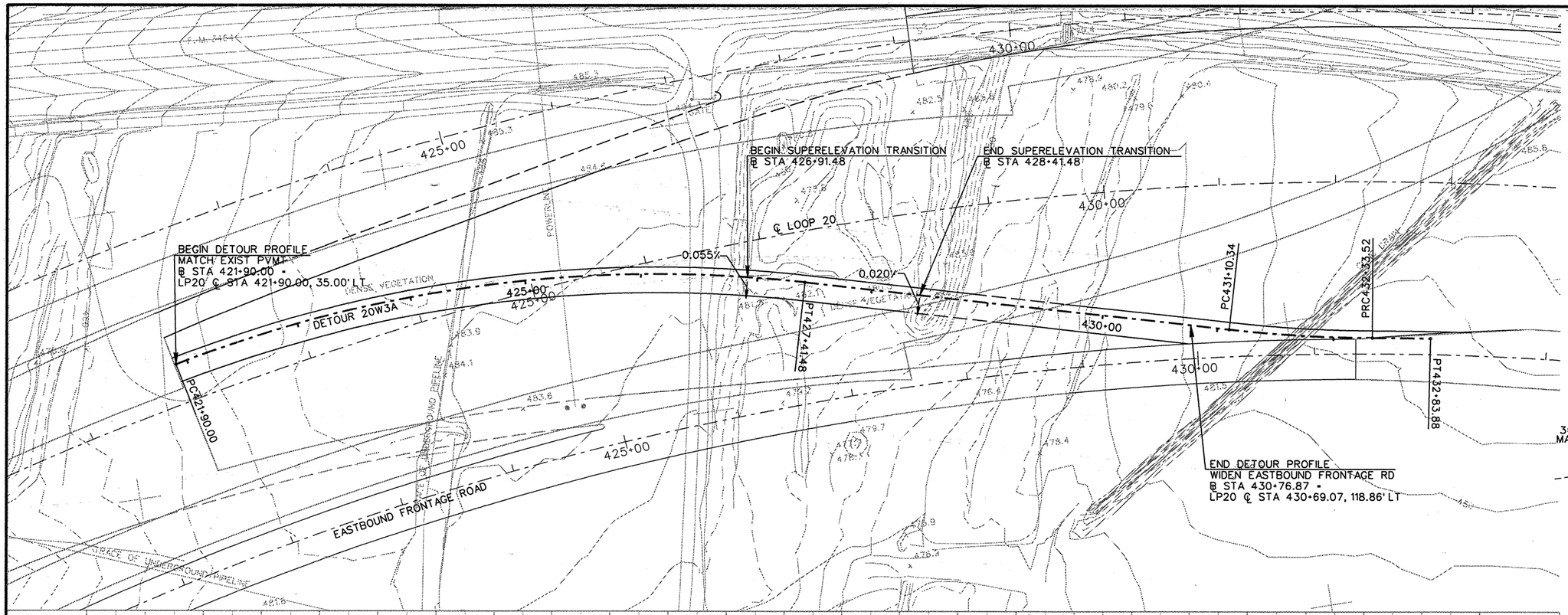

NOTE: SEE HORIZONTAL ALIGNMENT DATA SHEET FOR ALIGNMENT DETAILS.

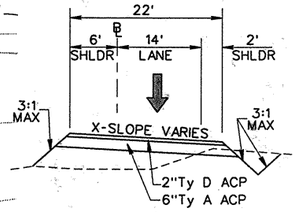

TYPICAL DETOUR SECTION
N.T.S.

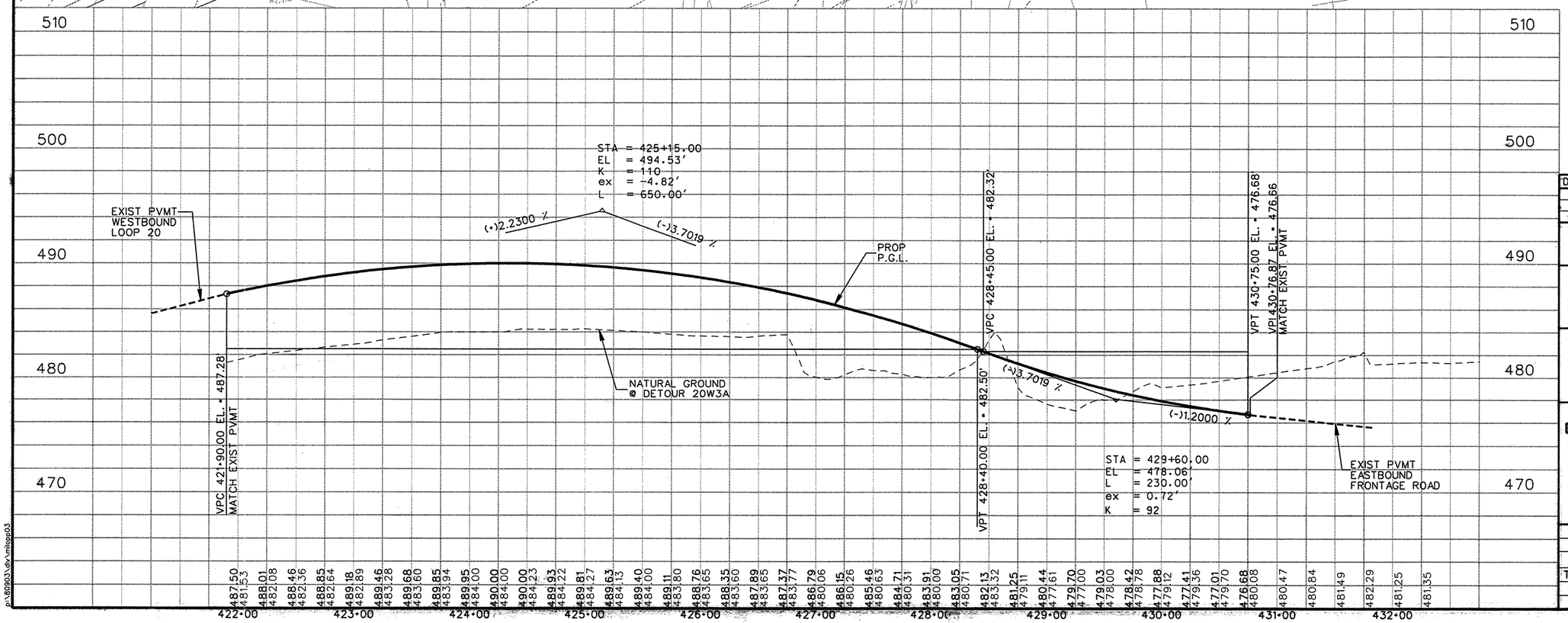

STATE OF TEXAS
JEFFERY T. SEILER
77187
REGISTERED PROFESSIONAL ENGINEER

Jeffery T. Seiler
5-6-99

DATE	BY	REV	REVISION

© 1999 Texas Department of Transportation

Brown & Root
HOUSTON, TEXAS

RODRIGUEZ & HUGGINS, INC.
CONSULTING ENGINEERS
11824 JOLLYVILLE ROAD SUITE 402
AUSTIN, TEXAS 78759
PHONE: 512 335 1754 FAX: 512 335 1799

LOOP 20
DETOUR PLAN AND PROFILE
20W3A

SCALE
VER 0 2.5 5 10
HOR 0 25 50 100

SHEET 1 OF 1

FED RD DIV NO	STATE PROJECT NO		SHEET NO
6			89
STATE	STATE DIST NO		COUNTY
TEXAS	22		WEBB
CONT	SECT	JOB	HIGHWAY NO
0086	14	023	LOOP 20

p:\80903\dlv\mlopp03

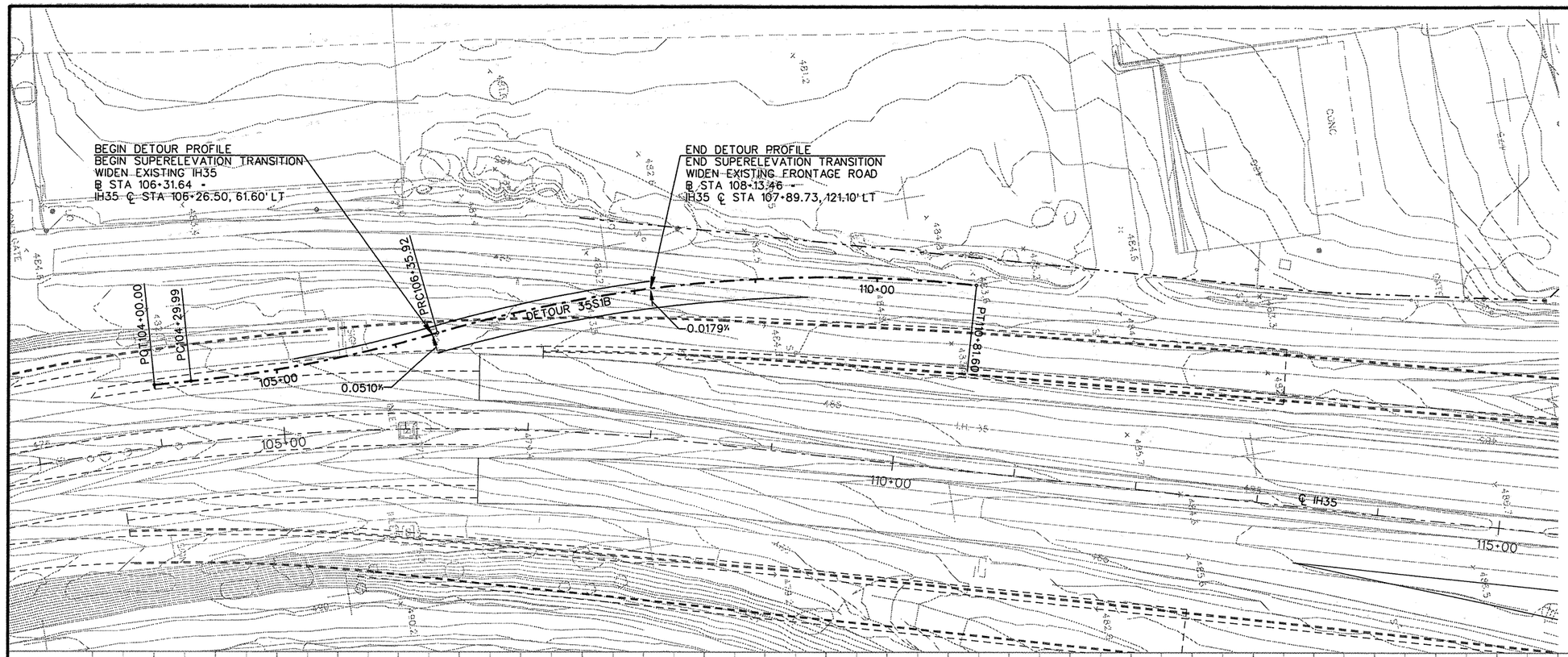

NOTE: SEE HORIZONTAL ALIGNMENT DATA SHEET FOR ALIGNMENT DETAILS.

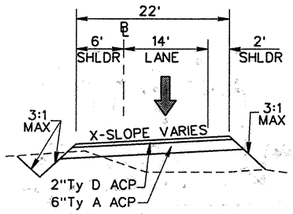

TYPICAL DETOUR SECTION
N.T.S.

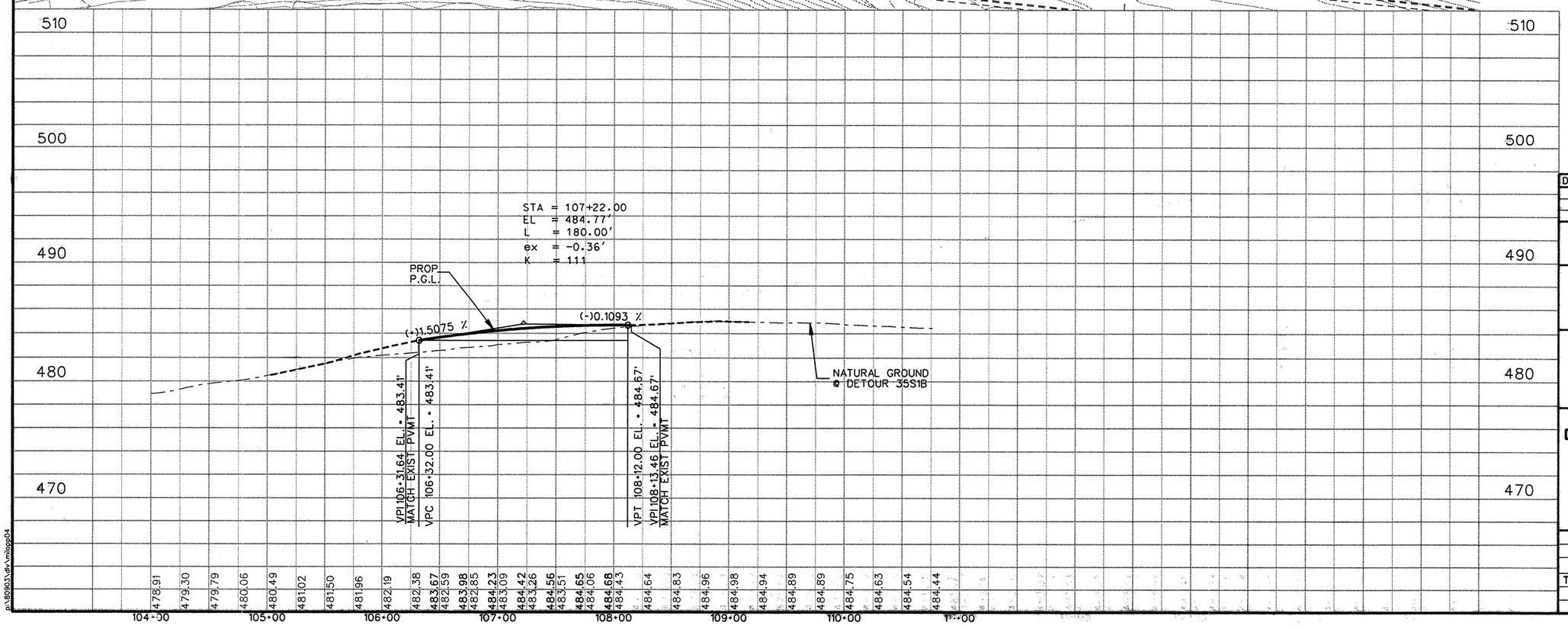

STATE OF TEXAS
JEFFERY T. SEILER
77187
REGISTERED PROFESSIONAL ENGINEER

Jeffery T. Seiler 5-6-99

DATE	BY	REV	REVISION

© 1999 Texas Department of Transportation

Brown & Root
HOUSTON, TEXAS

RNH
RODRIGUEZ & HUGGINS, INC.
CONSULTING ENGINEERS
11824 JOLLYVILLE ROAD SUITE 402
AUSTIN, TEXAS 78759
PHONE: 512 335 1754 FAX: 512 335 1799

IH 35
DETOUR PLAN AND PROFILE
35S1B

SCALE
VER 0 2.5 5 10
HOR 0 25 50 100

SHEET 1 OF 1

FED RD DIV NO	STATE PROJECT NO		SHEET NO
6			90
STATE	STATE DIST NO		COUNTY
TEXAS	22		WEBB
CONT	SECT	JOB	HIGHWAY NO
0018	06	131	LOOP 20

p:\80903\dlv\rnloop04

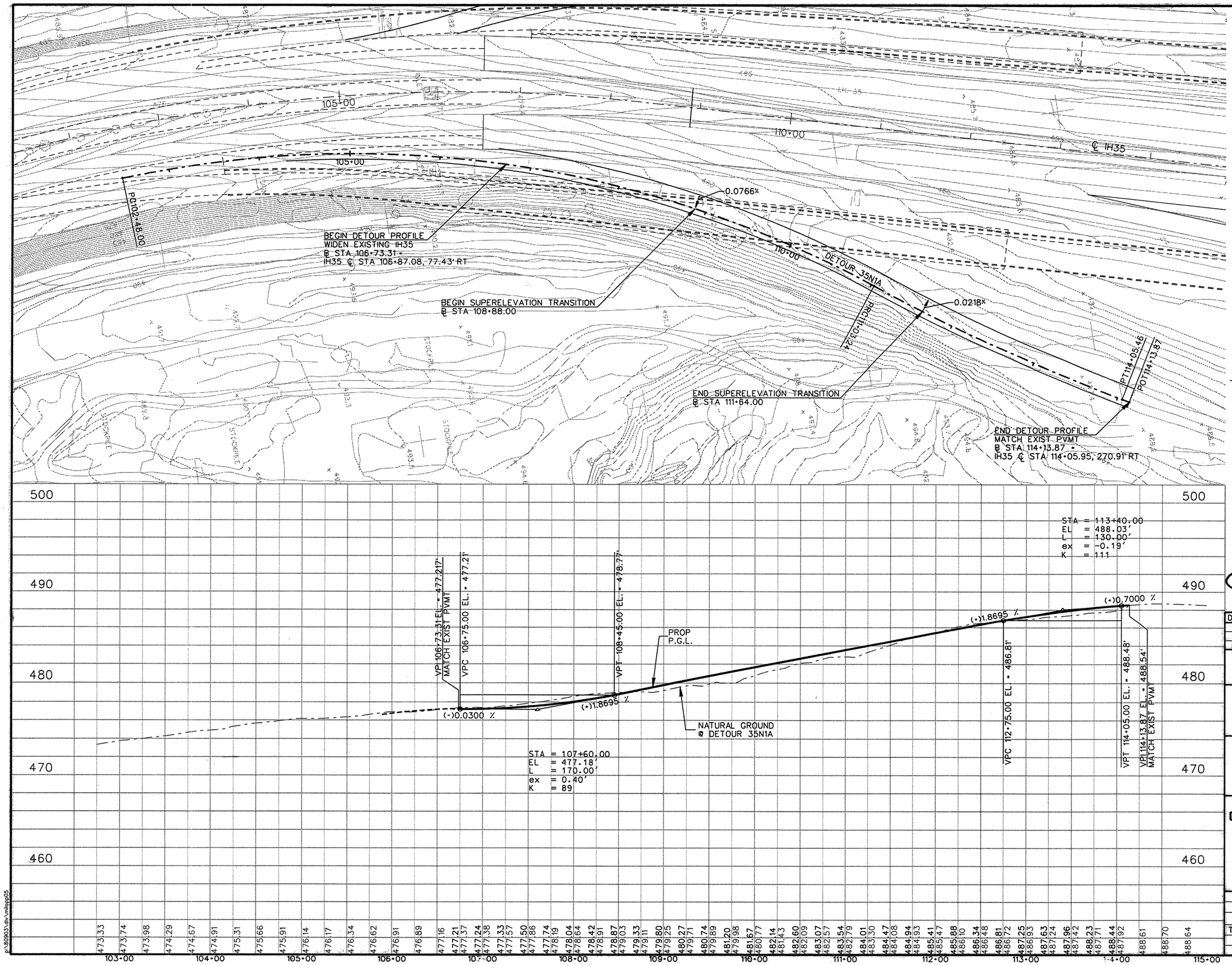

NOTE: SEE HORIZONTAL ALIGNMENT DATA SHEET FOR ALIGNMENT DETAILS.

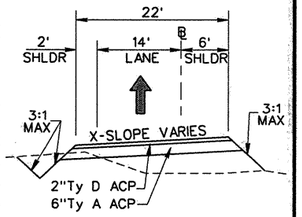

TYPICAL DETOUR SECTION
N.T.S.

STATE OF TEXAS
JEFFERY T. SEILER
77187
REGISTERED PROFESSIONAL ENGINEER

Jeffery T. Seiler
5-6-99

DATE	BY	REV	REVISION

© 1999 Texas Department of Transportation

Brown & Root
HOUSTON, TEXAS

RNH
RODRIGUEZ & HUGGINS, INC.
CONSULTING ENGINEERS
11824 JOLLYVILLE ROAD SUITE 402
AUSTIN, TEXAS 78759
PHONE: 512 335 1754 FAX: 512 335 1799

IH 35
DETOUR PLAN AND PROFILE
35N1A

SCALE
VER 0 2.5 5 10
HOR 0 25 50 100

SHEET 1 OF 1

FED RD DIV NO	STATE PROJECT NO		SHEET NO
6			91
STATE	STATE DIST NO		COUNTY
TEXAS	22		WEBB
CONT	SECT	JOB	HIGHWAY NO
0018	06	131	LOOP 20

p:\80903\dir\mlloop05

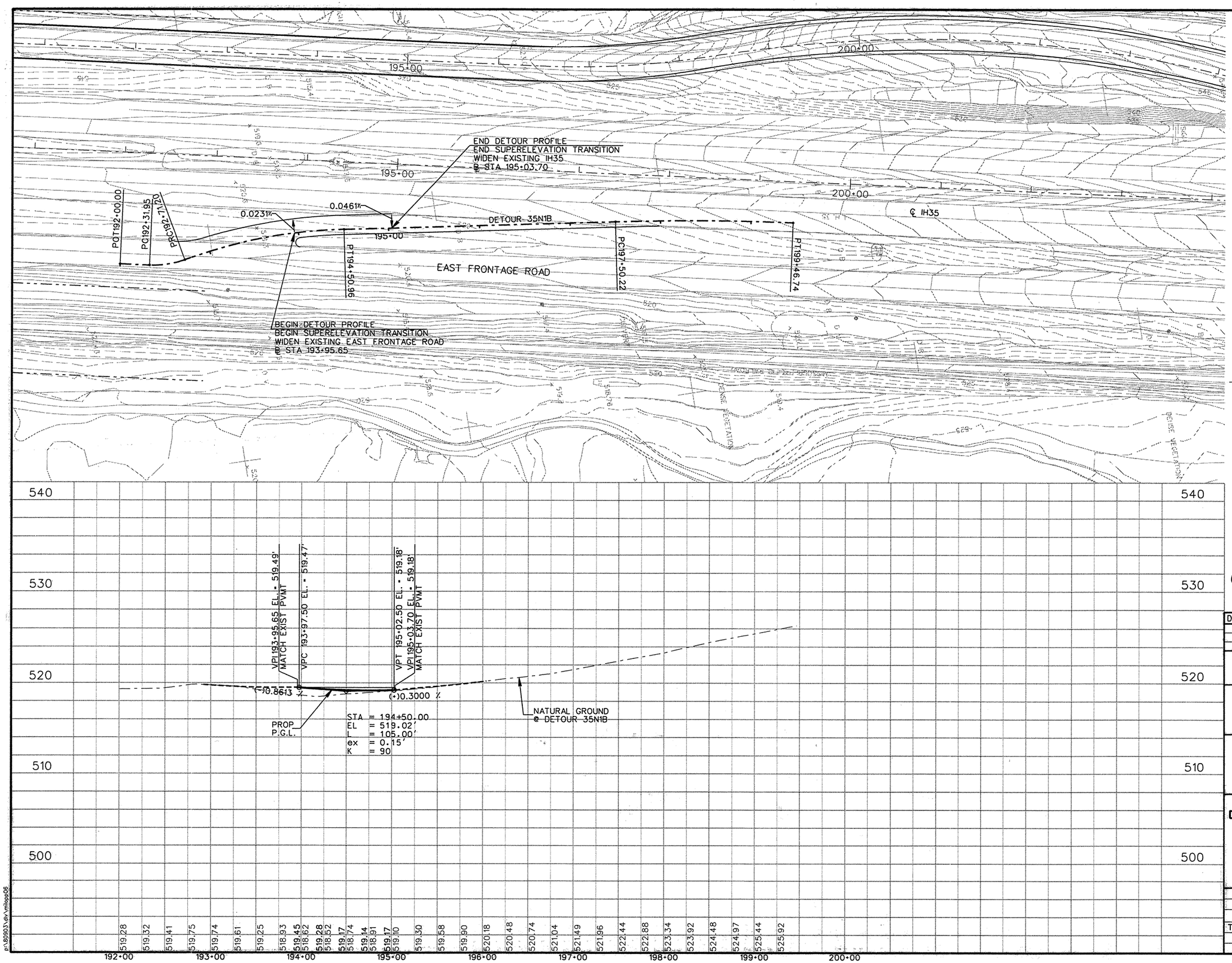

NOTE: SEE HORIZONTAL ALIGNMENT DATA SHEET FOR ALIGNMENT DETAILS.

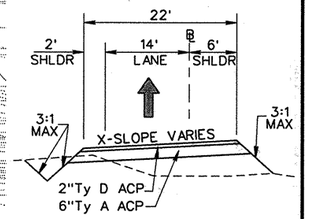

TYPICAL DETOUR SECTION
N.T.S.

STATE OF TEXAS
JEFFERY T. SEILER
77187
REGISTERED PROFESSIONAL ENGINEER

Jeffery T. Seiler
5-6-99

DATE	BY	REV	REVISION

© 1999 Texas Department of Transportation

Brown & Root
HOUSTON, TEXAS

RHI
RODRIGUEZ & HUGGINS, INC.
CONSULTING ENGINEERS
11824 JOLLYVILLE ROAD SUITE 402
AUSTIN, TEXAS 78759
PHONE: 512 335 1754 FAX: 512 335 1799

IH 35
DETOUR PLAN AND PROFILE
35N1B

SCALE
VER 0 2.5 5 10
HOR 0 25 50 100

SHEET 1 OF 1

FED RD DIV NO	STATE PROJECT NO		SHEET NO
6			92
STATE	STATE DIST NO		COUNTY
TEXAS	22		WEBB
CONT	SECT	JOB	HIGHWAY NO
0018	06	131	LOOP 20

p:\80903\div\mlsopp06

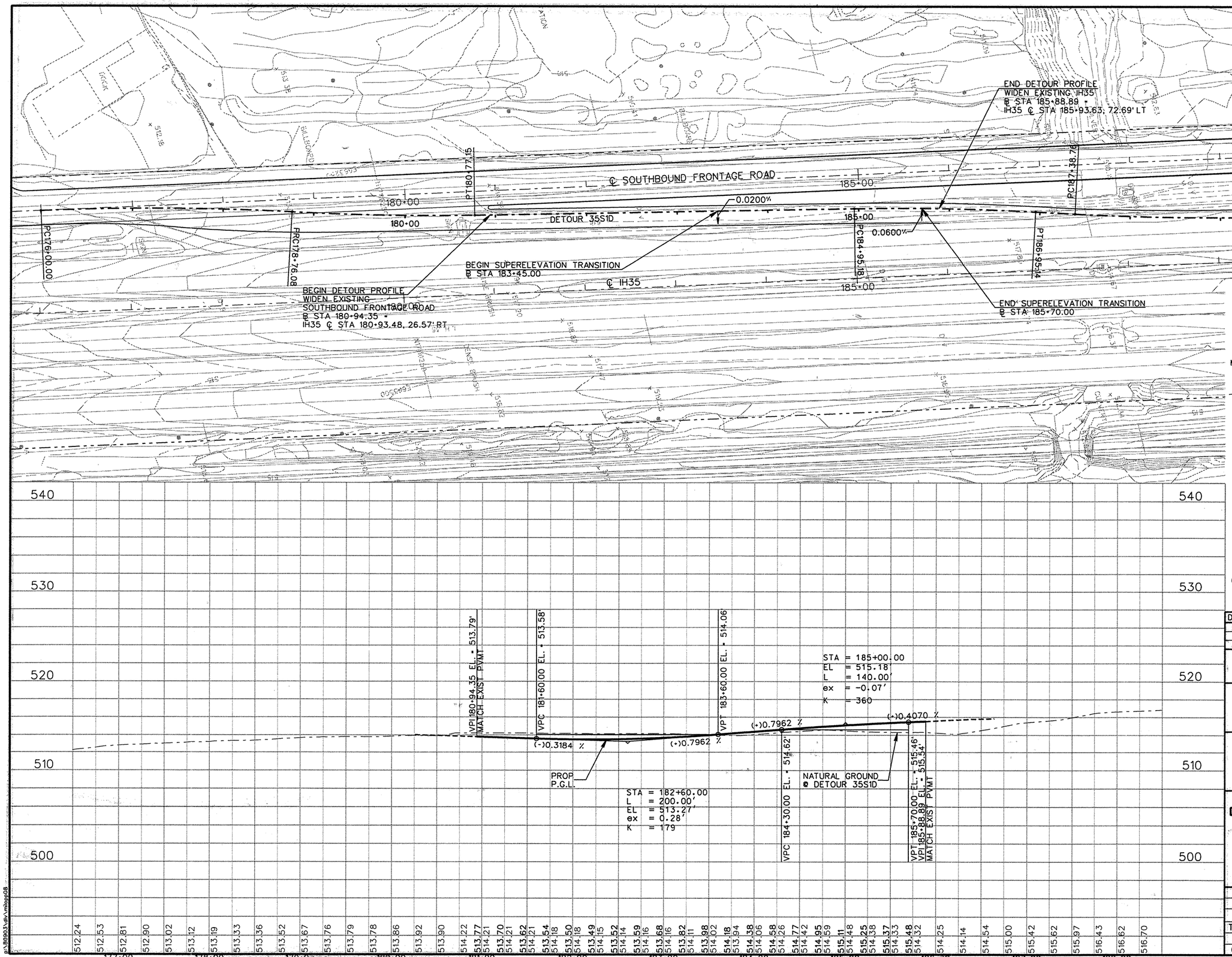

NOTE: SEE HORIZONTAL ALIGNMENT DATA SHEET FOR ALIGNMENT DETAILS.

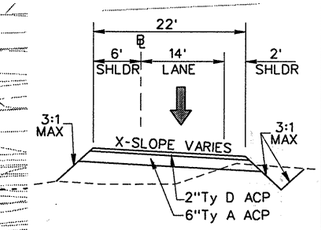

TYPICAL DETOUR SECTION
N.T.S.

STATE OF TEXAS
JEFFERY T. SEILER
77187
REGISTERED PROFESSIONAL ENGINEER

Jeffery T. Seiler
5-6-99

DATE	BY	REV	REVISION

© 1999 Texas Department of Transportation

Brown & Root
HOUSTON, TEXAS

RODRIGUEZ & HUGGINS, INC.
CONSULTING ENGINEERS
11824 JOLLYVILLE ROAD SUITE 402
AUSTIN, TEXAS 78759
PHONE: 512 335 1754 FAX: 512 335 1799

IH 35
DETOUR PLAN AND PROFILE
35S1D

SCALE
VER 0 2.5 5 10
HOR 0 25 50 100
SHEET 1 OF 1

FED RD DIV NO	STATE PROJECT NO		SHEET NO
6			94
STATE	STATE DIST NO		COUNTY
TEXAS	22		WEBB
CONT	SECT	JOB	HIGHWAY NO
0018	06	131	LOOP 20

p:\80903\dv\milopp08

LEGEND

PERMANENT CONSTRUCTION THIS PHASE

TEMPORARY CONSTRUCTION THIS PHASE

* TO BE CONSTRUCTED PRIOR TO BEGINNING PHASE 1 OPERATIONS

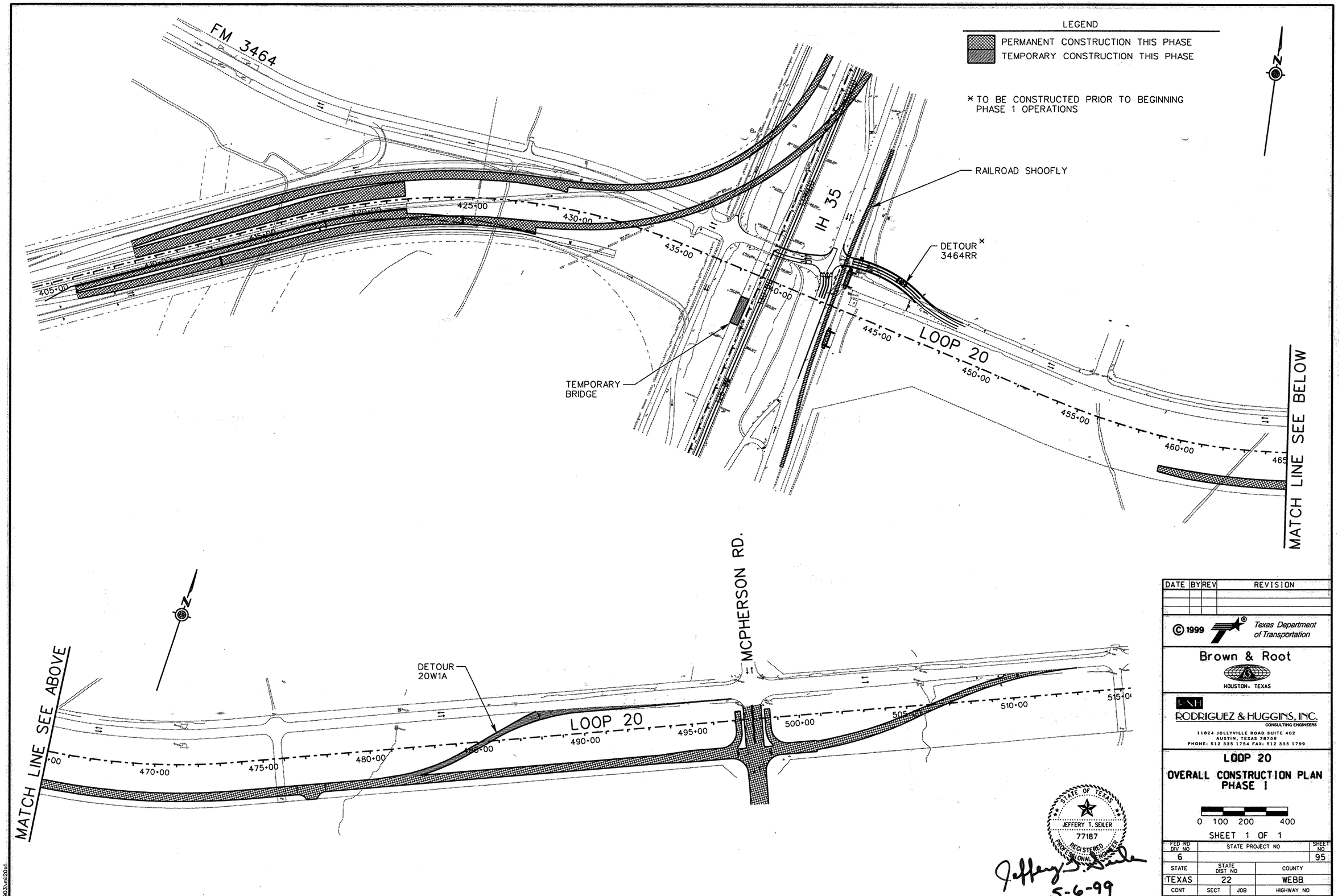

DATE	BY	REV	REVISION

© 1999 Texas Department of Transportation

Brown & Root
HOUSTON, TEXAS

RODRIGUEZ & HUGGINS, INC.
CONSULTING ENGINEERS
11824 JOLLYVILLE ROAD SUITE 402
AUSTIN, TEXAS 78759
PHONE: 512 335 1754 FAX: 512 335 1799

LOOP 20
OVERALL CONSTRUCTION PLAN PHASE I

0 100 200 400

SHEET 1 OF 1

STATE OF TEXAS
JEFFERY T. SEILER
77187
REGISTERED PROFESSIONAL ENGINEER

Jeffery T. Seiler
5-6-99

FED RD DIV NO	STATE PROJECT NO		SHEET NO
6			95
STATE	STATE DIST NO		COUNTY
TEXAS	22		WEBB
CONT	SECT	JOB	HIGHWAY NO
0086	14	023	LOOP 20

80903\vm20o1

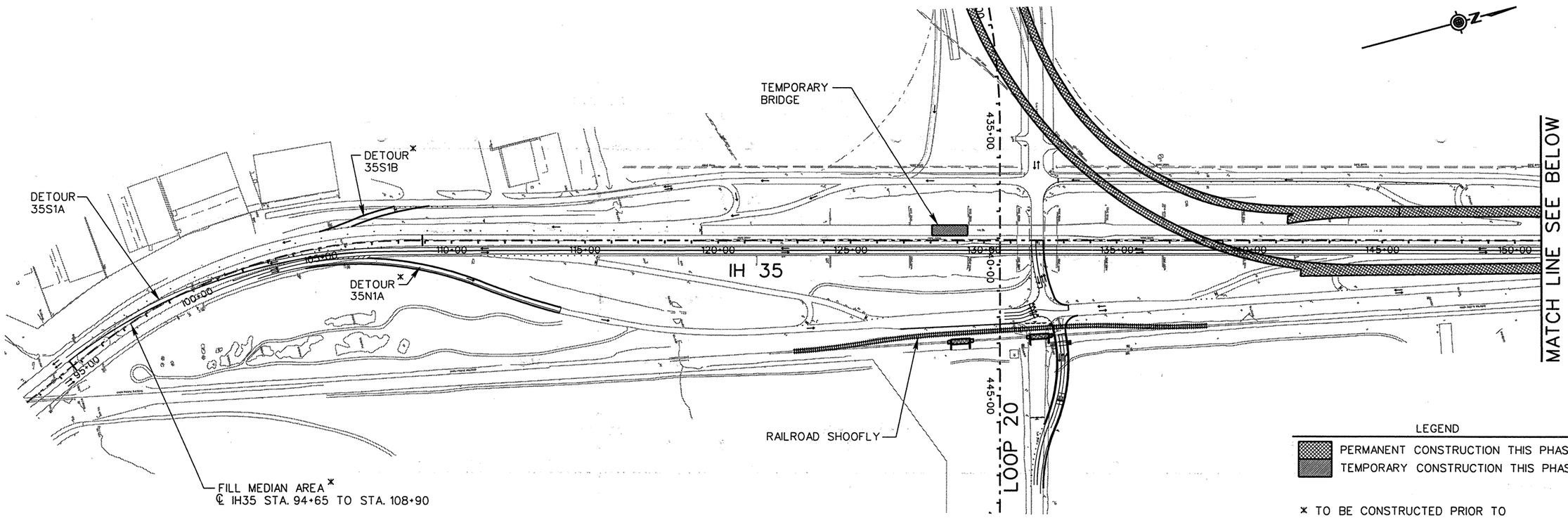

LEGEND

PERMANENT CONSTRUCTION THIS PHASE

TEMPORARY CONSTRUCTION THIS PHASE

* TO BE CONSTRUCTED PRIOR TO BEGINNING PHASE 1 OPERATIONS

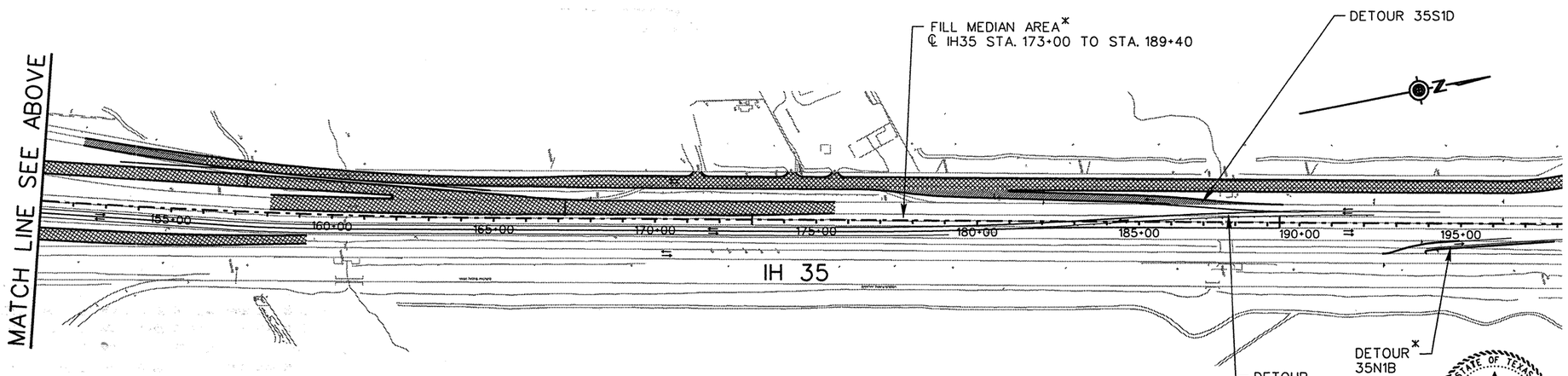

DATE	BY	REV	REVISION

© 1999 Texas Department of Transportation

Brown & Root
HOUSTON, TEXAS

RODRIGUEZ & HUGGINS, INC.
CONSULTING ENGINEERS
11824 JOLLYVILLE ROAD SUITE 402
AUSTIN, TEXAS 78759
PHONE: 512 335 1764 FAX: 512 335 1799

IH 35
OVERALL CONSTRUCTION PLAN PHASE I

0 100 200 400

SHEET 1 OF 1

STATE OF TEXAS
JEFFERY T. SEILER
77187
REGISTERED PROFESSIONAL ENGINEER

Jeffery T. Seiler
5-6-99

FED RD DIV NO	STATE PROJECT NO		SHEET NO
6			96
STATE	STATE DIST NO		COUNTY
TEXAS	22		WEBB
CONT	SECT	JOB	HIGHWAY NO
0018	06	131	LOOP 20

80903\mil35o1

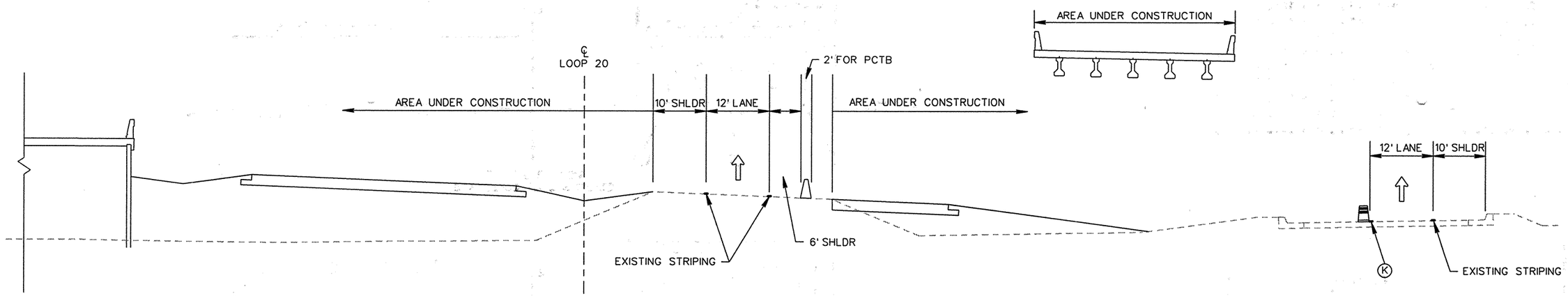

TYPICAL SECTION
STA 413+00 TO STA 421+90

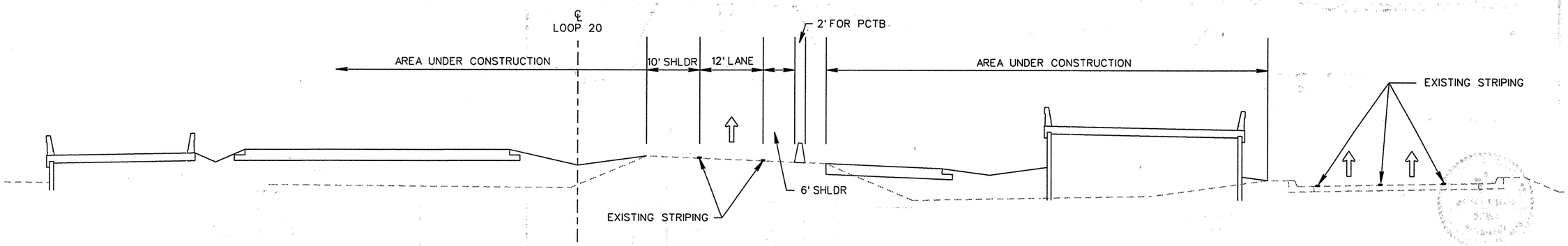

TYPICAL SECTION
STA 406+00 TO STA 413+00

PAVEMENT MARKING LEGEND

- (A) 0662 0501 WRK ZN PAV MRK REMOV (W) (4") (SLD)
- (B) 0662 0502 WRK ZN PAV MRK REMOV (W) (4") (BRK)
- (C) 0662 0507 WRK ZN PAV MRK REMOV (W) (8") (SLD)
- (D) 0662 0511 WRK ZN PAV MRK REMOV (W) (24") (SLD)
- (E) 0662 0523 WRK ZN PAV MRK REMOV (Y) (4") (SLD)
- (F) 0662 0525 WRK ZN PAV MRK REMOV (Y) (4") (DOT)
- (G) 0662 0532 WRK ZN PAV MRK REMOV (Y) (24") (SLD)
- (H) 0662 0549 WRK ZN PAV MRK NON-REMOV (W) (4") (SLD)
- (I) 0662 0553 WRK ZN PAV MRK NON-REMOV (W) (8") (SLD)
- (J) 0662 0557 WRK ZN PAV MRK NON-REMOV (W) (24") (SLD)
- (K) 0662 0569 WRK ZN PAV MRK NON-REMOV (Y) (4") (SLD)

STATE OF TEXAS
JEFFERY T. SEILER
77187
REGISTERED PROFESSIONAL ENGINEER

Jeffery T. Seiler
5-6-99

DATE	BY	REV	REVISION

© 1999 Texas Department of Transportation

Brown & Root
HOUSTON, TEXAS

RHI
RODRIGUEZ & HUGGINS, INC.
CONSULTING ENGINEERS
11824 JOLLYVILLE ROAD SUITE 402
AUSTIN, TEXAS 78759
PHONE: 512 335 1754 FAX: 512 335 1799

LOOP 20

TCP TYPICAL SECTIONS
PHASE I

0 10 20

SHEET 1 OF 1

FED RD DIV NO	STATE PROJECT NO		SHEET NO
6			97
STATE	STATE DIST NO		COUNTY
TEXAS	22		WEBB
CONT	SECT	JOB	HIGHWAY NO
0086	14	023	LOOP 20

PAVEMENT MARKING LEGEND

(A)	0662	0501	WRK	ZN	PAV	MRK	REMOV	(W)	(4") (SLD)
(B)	0662	0502	WRK	ZN	PAV	MRK	REMOV	(W)	(4") (BRK)
(C)	0662	0507	WRK	ZN	PAV	MRK	REMOV	(W)	(8") (SLD)
(D)	0662	0511	WRK	ZN	PAV	MRK	REMOV	(W)	(24") (SLD)
(E)	0662	0523	WRK	ZN	PAV	MRK	REMOV	(Y)	(4") (SLD)
(F)	0662	0525	WRK	ZN	PAV	MRK	REMOV	(Y)	(4") (DOT)
(G)	0662	0532	WRK	ZN	PAV	MRK	REMOV	(Y)	(24") (SLD)
(H)	0662	0549	WRK	ZN	PAV	MRK	NON-REMOV	(W)	(4") (SLD)
(I)	0662	0553	WRK	ZN	PAV	MRK	NON-REMOV	(W)	(8") (SLD)
(J)	0662	0557	WRK	ZN	PAV	MRK	NON-REMOV	(W)	(24") (SLD)
(K)	0662	0569	WRK	ZN	PAV	MRK	NON-REMOV	(Y)	(4") (SLD)

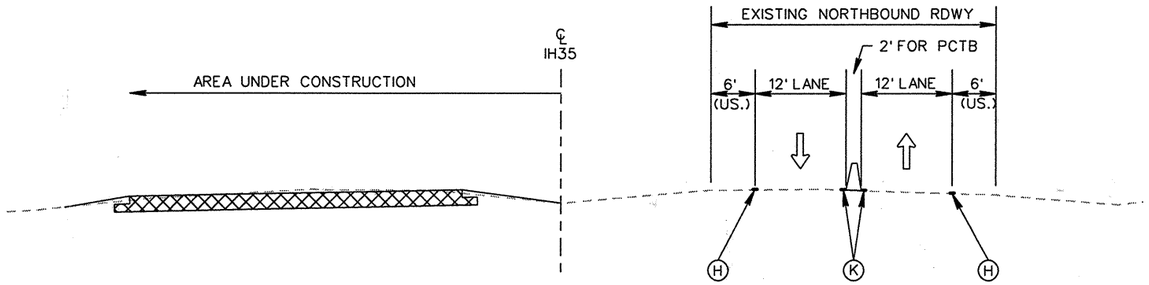

TYPICAL SECTION
STA 158+00 TO STA 175+30

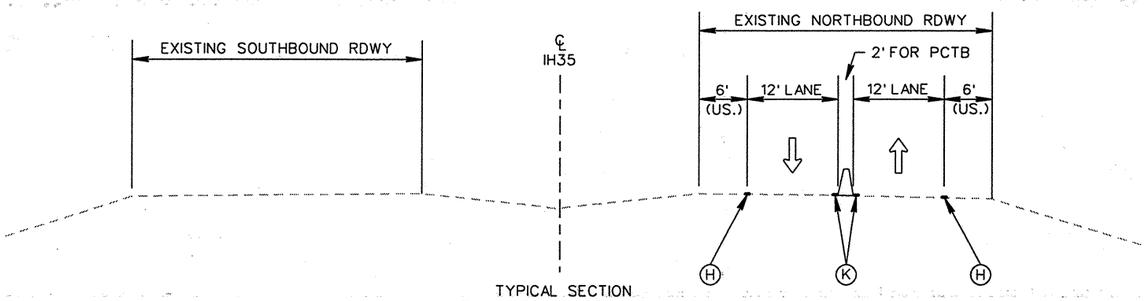

TYPICAL SECTION
STA 119+30 TO STA 158+00
(EXCEPT FOR TEMPORARY BRIDGE SECTION)

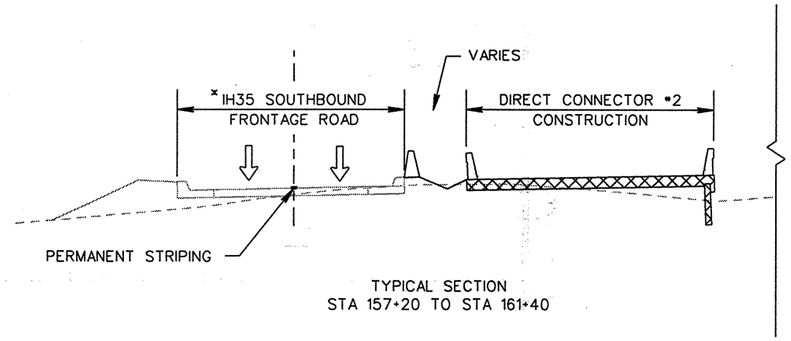

TYPICAL SECTION
STA 157+20 TO STA 161+40

* SEE PHASE I SEQUENCE OF CONSTRUCTION DESCRIPTION

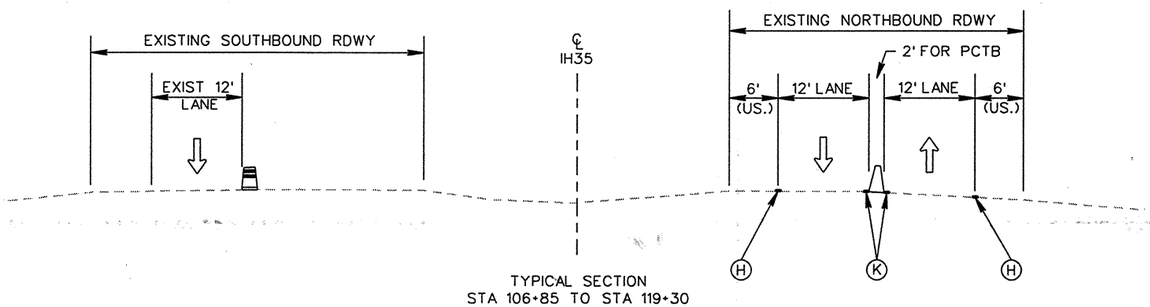

TYPICAL SECTION
STA 106+85 TO STA 119+30

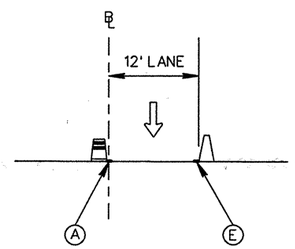

TYPICAL SECTION
DETOUR 35S1A

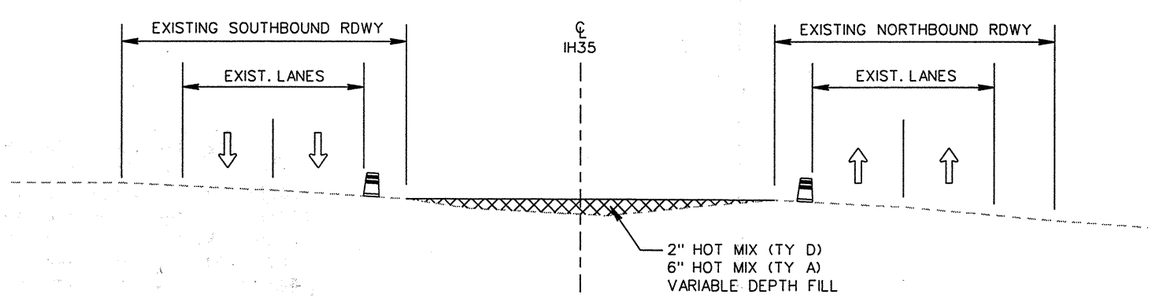

MEDIAN CONSTRUCTION FOR TRAFFIC SWITCHES
STA 94+65 TO STA 108+90 AND
STA 173+00 TO STA STA 189+40

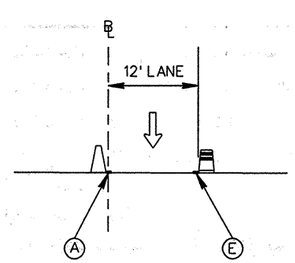

TYPICAL SECTION
DETOUR 35S1C

STATE OF TEXAS
JEFFERY T. SEILER
77187
REGISTERED PROFESSIONAL ENGINEER

5-6-99

DATE	BY	REV	REVISION

© 1999 Texas Department of Transportation

Brown & Root
HOUSTON, TEXAS

RHI
RODRIGUEZ & HUGGINS, INC.
CONSULTING ENGINEERS
11824 JOLLYVILLE ROAD SUITE 402
AUSTIN, TEXAS 78759
PHONE: 512 335 1784 FAX: 512 335 1799

IH 35
TCP TYPICAL SECTIONS
PHASE I

0 10 20

SHEET 1 OF 1

FED RD DIV NO	STATE PROJECT NO		SHEET NO
6			98
STATE	STATE DIST NO		COUNTY
TEXAS	22		WEBB
CONT	SECT	JOB	HIGHWAY NO
0018	05	057	LOOP 20

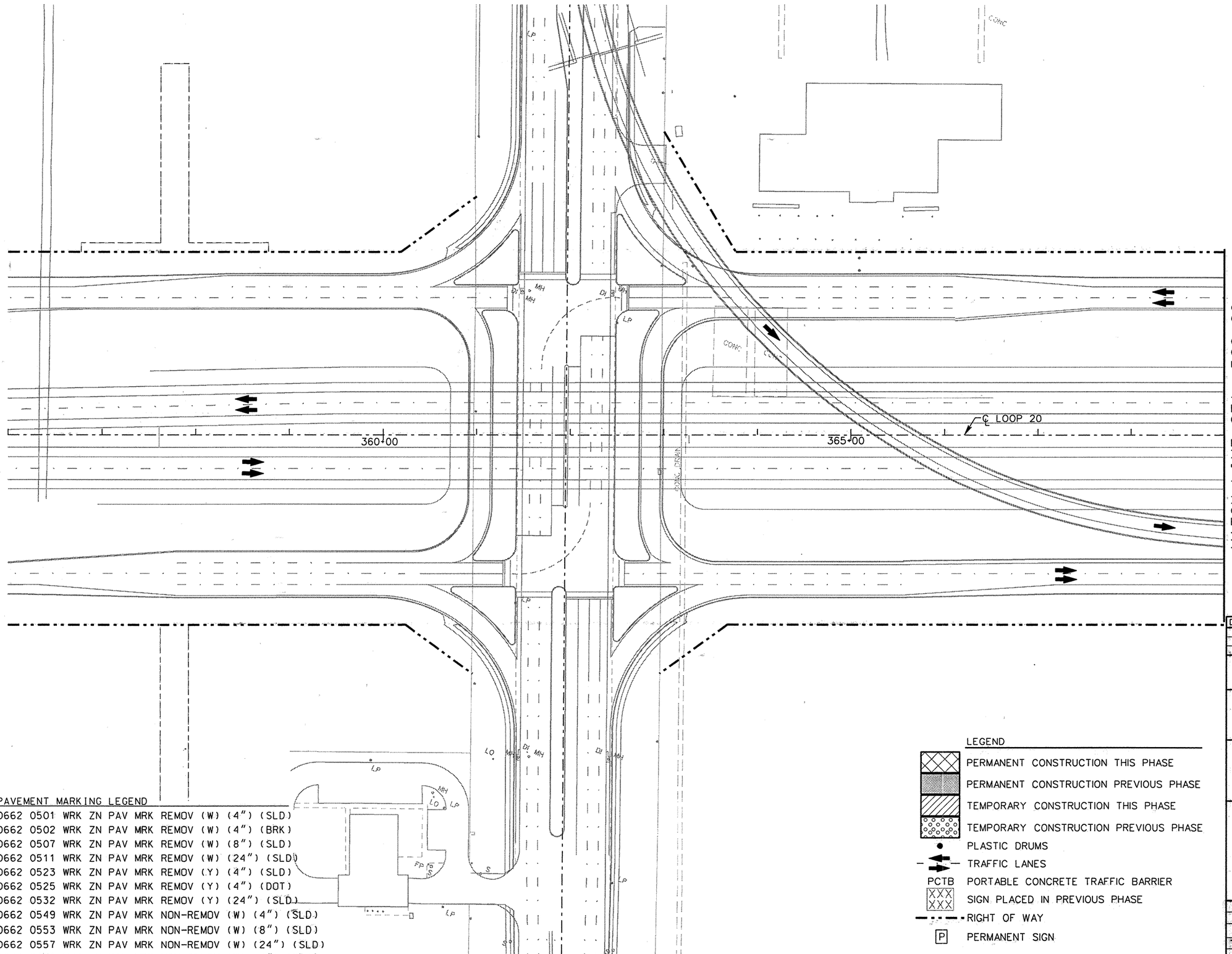

PAVEMENT MARKING LEGEND

A	0662	0501	WRK	ZN	PAV	MRK	REMOV	(W)	(4") (SLD)
B	0662	0502	WRK	ZN	PAV	MRK	REMOV	(W)	(4") (BRK)
C	0662	0507	WRK	ZN	PAV	MRK	REMOV	(W)	(8") (SLD)
D	0662	0511	WRK	ZN	PAV	MRK	REMOV	(W)	(24") (SLD)
E	0662	0523	WRK	ZN	PAV	MRK	REMOV	(Y)	(4") (SLD)
F	0662	0525	WRK	ZN	PAV	MRK	REMOV	(Y)	(4") (DOT)
G	0662	0532	WRK	ZN	PAV	MRK	REMOV	(Y)	(24") (SLD)
H	0662	0549	WRK	ZN	PAV	MRK	NON-REMOV	(W)	(4") (SLD)
I	0662	0553	WRK	ZN	PAV	MRK	NON-REMOV	(W)	(8") (SLD)
J	0662	0557	WRK	ZN	PAV	MRK	NON-REMOV	(W)	(24") (SLD)
K	0662	0569	WRK	ZN	PAV	MRK	NON-REMOV	(Y)	(4") (SLD)

LEGEND

- PERMANENT CONSTRUCTION THIS PHASE
- PERMANENT CONSTRUCTION PREVIOUS PHASE
- TEMPORARY CONSTRUCTION THIS PHASE
- TEMPORARY CONSTRUCTION PREVIOUS PHASE
- PLASTIC DRUMS
- TRAFFIC LANES
- PCTB PORTABLE CONCRETE TRAFFIC BARRIER
- SIGN PLACED IN PREVIOUS PHASE
- RIGHT OF WAY
- P PERMANENT SIGN

STATE OF TEXAS
JEFFERY T. SEILER
77187
REGISTERED PROFESSIONAL ENGINEER

Jeffery T. Seiler
5-6-99

DATE	BY	REV	REVISION

© 1999 Texas Department of Transportation

Brown & Root
HOUSTON, TEXAS

RODRIGUEZ & HUGGINS, INC.
CONSULTING ENGINEERS
11824 JOLLYVILLE ROAD SUITE 402
AUSTIN, TEXAS 78759
PHONE: 512 335 1754 FAX: 512 335 1799

LOOP 20
TRAFFIC CONTROL PLAN PHASE I

0 25 50 100

SHEET 1 OF 12

FED RD DIV NO	STATE PROJECT NO		SHEET NO
6			99
STATE	STATE DIST NO		COUNTY
TEXAS	22		WEBB
CONT	SECT	JOB	HIGHWAY NO
0086	14	023	LOOP 20

80903\Mio Interchange\mTC101.dgn

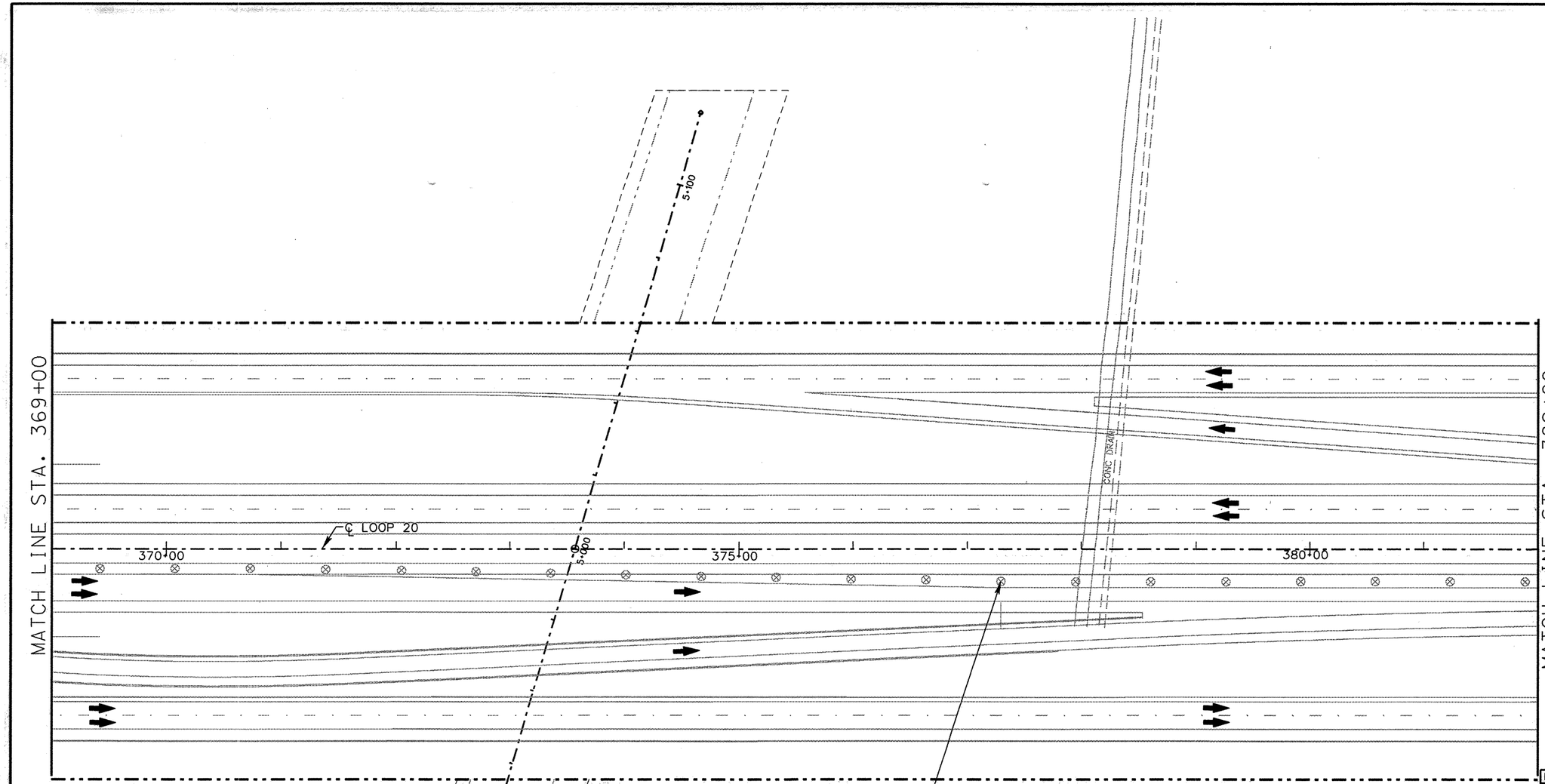

PAVEMENT MARKING LEGEND

(A) 0662 0501 WRK ZN PAV MRK REMOV (W) (4") (SLD)
(B) 0662 0502 WRK ZN PAV MRK REMOV (W) (4") (BRK)
(C) 0662 0507 WRK ZN PAV MRK REMOV (W) (8") (SLD)
(D) 0662 0511 WRK ZN PAV MRK REMOV (W) (24") (SLD)
(E) 0662 0523 WRK ZN PAV MRK REMOV (Y) (4") (SLD)
(F) 0662 0525 WRK ZN PAV MRK REMOV (Y) (4") (DOT)
(G) 0662 0532 WRK ZN PAV MRK REMOV (Y) (24") (SLD)
(H) 0662 0549 WRK ZN PAV MRK NON-REMOV (W) (4") (SLD)
(I) 0662 0553 WRK ZN PAV MRK NON-REMOV (W) (8") (SLD)
(J) 0662 0557 WRK ZN PAV MRK NON-REMOV (W) (24") (SLD)
(K) 0662 0569 WRK ZN PAV MRK NON-REMOV (Y) (4") (SLD)

LEGEND

- PERMANENT CONSTRUCTION THIS PHASE
- PERMANENT CONSTRUCTION PREVIOUS PHASE
- TEMPORARY CONSTRUCTION THIS PHASE
- TEMPORARY CONSTRUCTION PREVIOUS PHASE
- PLASTIC DRUMS
- TRAFFIC LANES
- PCTB — PORTABLE CONCRETE TRAFFIC BARRIER
- XXX — SIGN PLACED IN PREVIOUS PHASE
- RIGHT OF WAY
- P — PERMANENT SIGN

STATE OF TEXAS
JEFFERY T. SEILER
77187
REGISTERED PROFESSIONAL ENGINEER

5-6-99

DATE	BY	REV	REVISION

© 1999 Texas Department of Transportation

Brown & Root
HOUSTON, TEXAS

RNH
RODRIGUEZ & HUGGINS, INC.
CONSULTING ENGINEERS
11824 JOLLYVILLE ROAD SUITE 402
AUSTIN, TEXAS 78759
PHONE: 512 335 1754 FAX: 512 335 1799

LOOP 20
TRAFFIC CONTROL PLAN PHASE I

0 25 50 100

SHEET 2 OF 12

FED RD DIV NO	STATE PROJECT NO		SHEET NO
6			100
STATE	STATE DIST NO		COUNTY
TEXAS	22		WEBB
CONT	SECT	JOB	HIGHWAY NO
0086	14	023	LOOP 20

80903\Mlo_Interchange\mlTC02.dgn

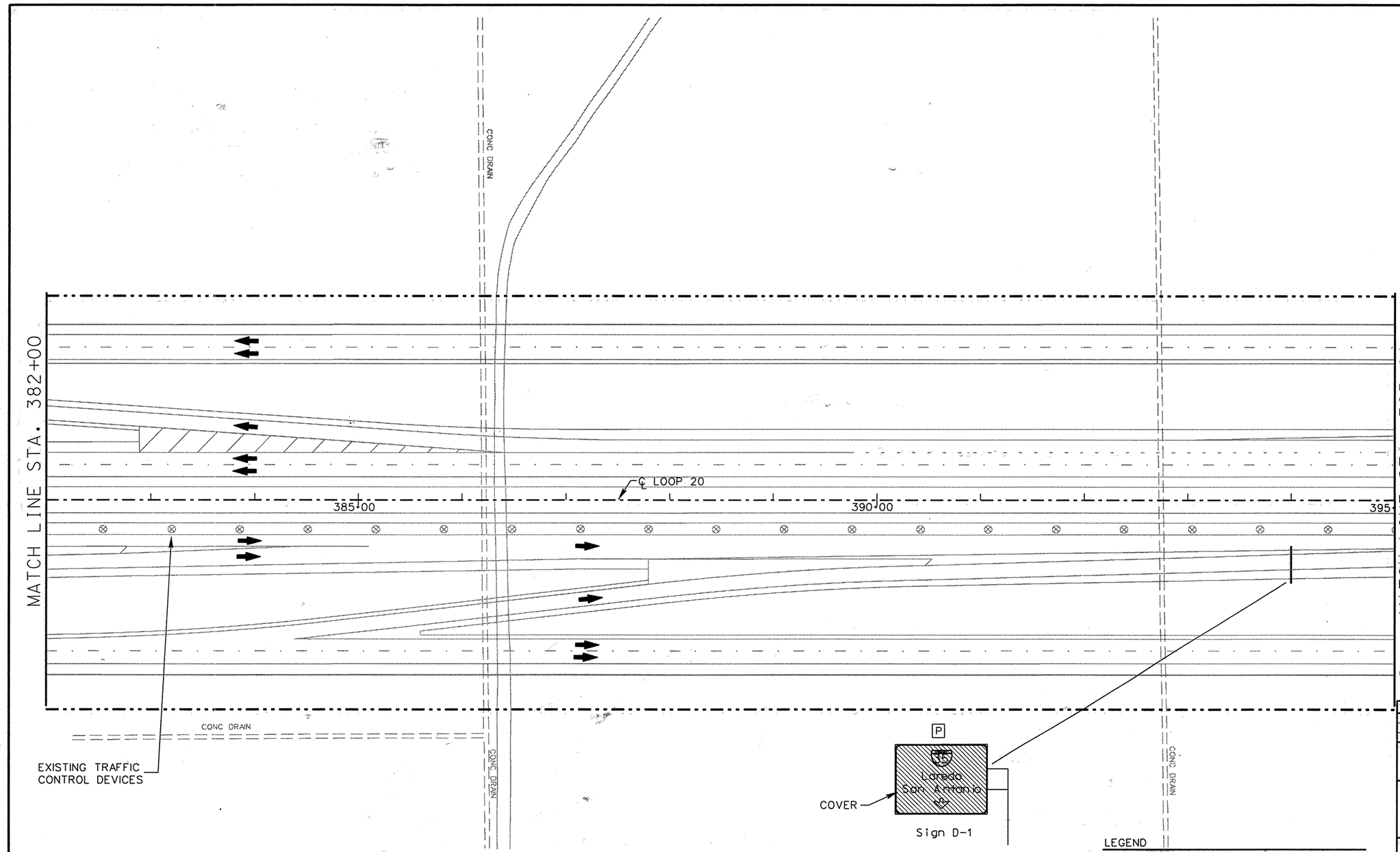

PAVEMENT MARKING LEGEND

(A) 0662 0501 WRK ZN PAV MRK REMOV (W) (4") (SLD)
(B) 0662 0502 WRK ZN PAV MRK REMOV (W) (4") (BRK)
(C) 0662 0507 WRK ZN PAV MRK REMOV (W) (8") (SLD)
(D) 0662 0511 WRK ZN PAV MRK REMOV (W) (24") (SLD)
(E) 0662 0523 WRK ZN PAV MRK REMOV (Y) (4") (SLD)
(F) 0662 0525 WRK ZN PAV MRK REMOV (Y) (4") (DOT)
(G) 0662 0532 WRK ZN PAV MRK REMOV (Y) (24") (SLD)
(H) 0662 0549 WRK ZN PAV MRK NON-REMOV (W) (4") (SLD)
(I) 0662 0553 WRK ZN PAV MRK NON-REMOV (W) (8") (SLD)
(J) 0662 0557 WRK ZN PAV MRK NON-REMOV (W) (24") (SLD)
(K) 0662 0569 WRK ZN PAV MRK NON-REMOV (Y) (4") (SLD)

LEGEND

- PERMANENT CONSTRUCTION THIS PHASE
- PERMANENT CONSTRUCTION PREVIOUS PHASE
- TEMPORARY CONSTRUCTION THIS PHASE
- TEMPORARY CONSTRUCTION PREVIOUS PHASE
- PLASTIC DRUMS
- TRAFFIC LANES
- PCTB PORTABLE CONCRETE TRAFFIC BARRIER
- XXX SIGN PLACED IN PREVIOUS PHASE
- RIGHT OF WAY
- P PERMANENT SIGN

STATE OF TEXAS
JEFFERY T. SEILER
77187
REGISTERED PROFESSIONAL ENGINEER

Jeffery T. Seiler
5-6-99

DATE	BY	REV	REVISION

© 1999 Texas Department of Transportation

Brown & Root
HOUSTON, TEXAS

RHI
RODRIGUEZ & HUGGINS, INC.
CONSULTING ENGINEERS
11824 JOLLYVILLE ROAD SUITE 402
AUSTIN, TEXAS 78759
PHONE: 512 335 1754 FAX: 512 335 1799

LOOP 20
TRAFFIC CONTROL PLAN PHASE I

0 25 50 100

SHEET 3 OF 12

FED RD DIV NO	STATE PROJECT NO		SHEET NO
6			101
STATE	STATE DIST NO		COUNTY
TEXAS	22		WEBB
CONT	SECT	JOB	HIGHWAY NO
0086	14	023	LOOP 20

80903\Mlto Interchange\vmTC103.dgn

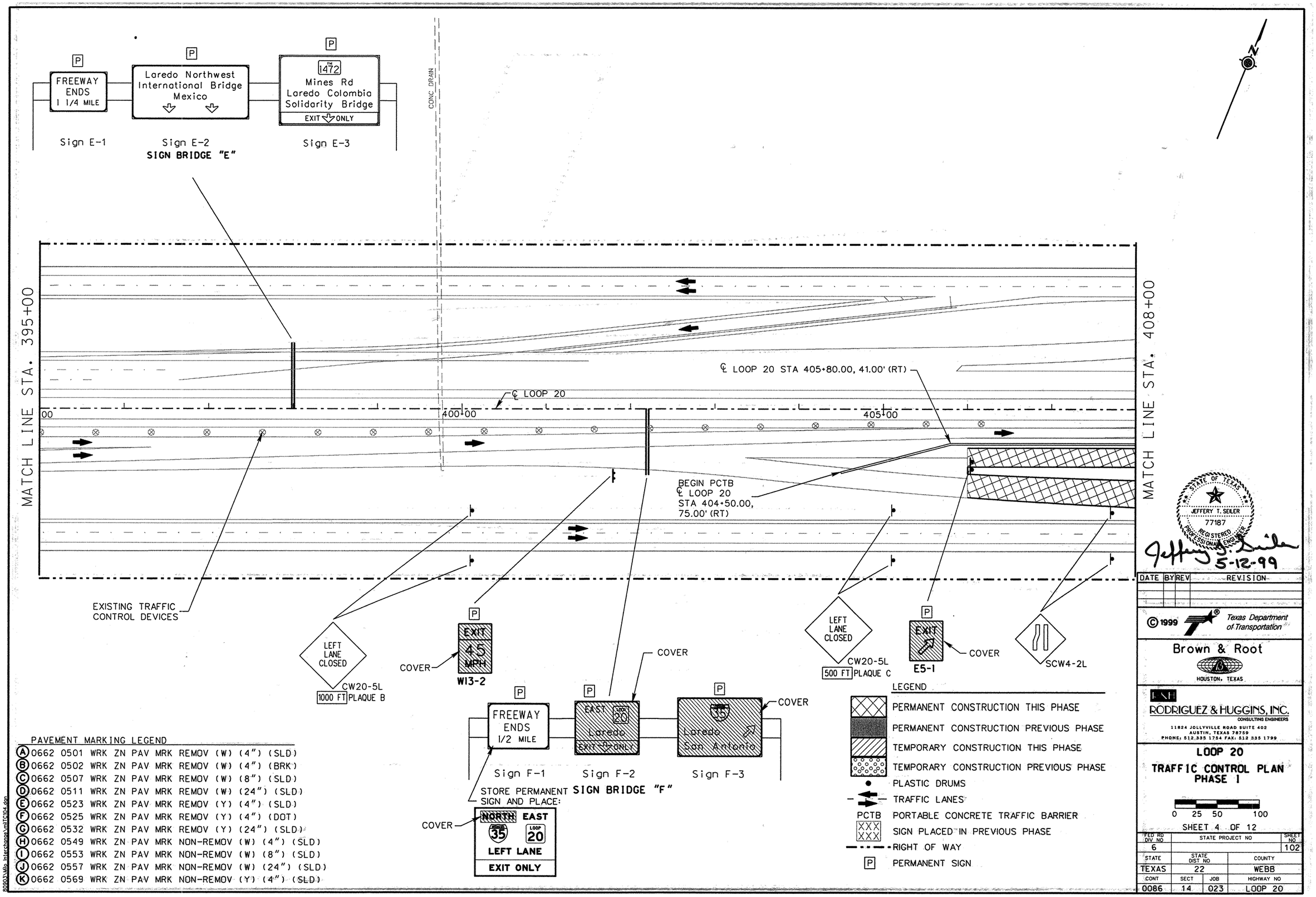
P
FREEWAY ENDS 1 1/4 MILE
Sign E-1
P
Laredo Northwest International Bridge Mexico
Sign E-2
SIGN BRIDGE "E"
P
1472
Mines Rd
Laredo Colombia Solidarity Bridge
EXIT ONLY
Sign E-3
CONC DRAIN
MATCH LINE STA. 395+00
MATCH LINE STA. 408+00
℄ LOOP 20
400+00
405+00
℄ LOOP 20 STA 405+80.00, 41.00' (RT)
BEGIN PCTB
℄ LOOP 20
STA 404+50.00,
75.00' (RT)
EXISTING TRAFFIC CONTROL DEVICES
LEFT LANE CLOSED
CW20-5L
1000 FT PLAQUE B
COVER
P
EXIT
45 MPH
W13-2
COVER
P
FREEWAY ENDS 1/2 MILE
Sign F-1
P
EAST LOOP 20
Laredo
EXIT ONLY
Sign F-2
P
35
Laredo
San Antonio
Sign F-3
COVER
STORE PERMANENT SIGN AND PLACE:
COVER
NORTH EAST
35 LOOP 20
LEFT LANE
EXIT ONLY
SIGN BRIDGE "F"
LEFT LANE CLOSED
CW20-5L
500 FT PLAQUE C
P
EXIT
E5-1
COVER
SCW4-2L
LEGEND
PERMANENT CONSTRUCTION THIS PHASE
PERMANENT CONSTRUCTION PREVIOUS PHASE
TEMPORARY CONSTRUCTION THIS PHASE
TEMPORARY CONSTRUCTION PREVIOUS PHASE
PLASTIC DRUMS
TRAFFIC LANES
PCTB PORTABLE CONCRETE TRAFFIC BARRIER
SIGN PLACED IN PREVIOUS PHASE
RIGHT OF WAY
P PERMANENT SIGN
PAVEMENT MARKING LEGEND
(A) 0662 0501 WRK ZN PAV MRK REMOV (W) (4") (SLD)
(B) 0662 0502 WRK ZN PAV MRK REMOV (W) (4") (BRK)
(C) 0662 0507 WRK ZN PAV MRK REMOV (W) (8") (SLD)
(D) 0662 0511 WRK ZN PAV MRK REMOV (W) (24") (SLD)
(E) 0662 0523 WRK ZN PAV MRK REMOV (Y) (4") (SLD)
(F) 0662 0525 WRK ZN PAV MRK REMOV (Y) (4") (DOT)
(G) 0662 0532 WRK ZN PAV MRK REMOV (Y) (24") (SLD)
(H) 0662 0549 WRK ZN PAV MRK NON-REMOV (W) (4") (SLD)
(I) 0662 0553 WRK ZN PAV MRK NON-REMOV (W) (8") (SLD)
(J) 0662 0557 WRK ZN PAV MRK NON-REMOV (W) (24") (SLD)
(K) 0662 0569 WRK ZN PAV MRK NON-REMOV (Y) (4") (SLD)
STATE OF TEXAS
JEFFERY T. SEILER
77187
REGISTERED PROFESSIONAL ENGINEER
5-12-99
DATE BY REV REVISION
© 1999 Texas Department of Transportation
Brown & Root
HOUSTON, TEXAS
RODRIGUEZ & HUGGINS, INC.
CONSULTING ENGINEERS
11824 JOLLYVILLE ROAD SUITE 402
AUSTIN, TEXAS 78759
PHONE: 512.335 1754 FAX: 512 335 1799
LOOP 20
TRAFFIC CONTROL PLAN
PHASE 1
0 25 50 100
SHEET 4 OF 12
FED RD DIV NO 6
STATE PROJECT NO
SHEET NO 102
STATE TEXAS
STATE DIST NO 22
COUNTY WEBB
CONT 0086
SECT 14
JOB 023
HIGHWAY NO LOOP 20

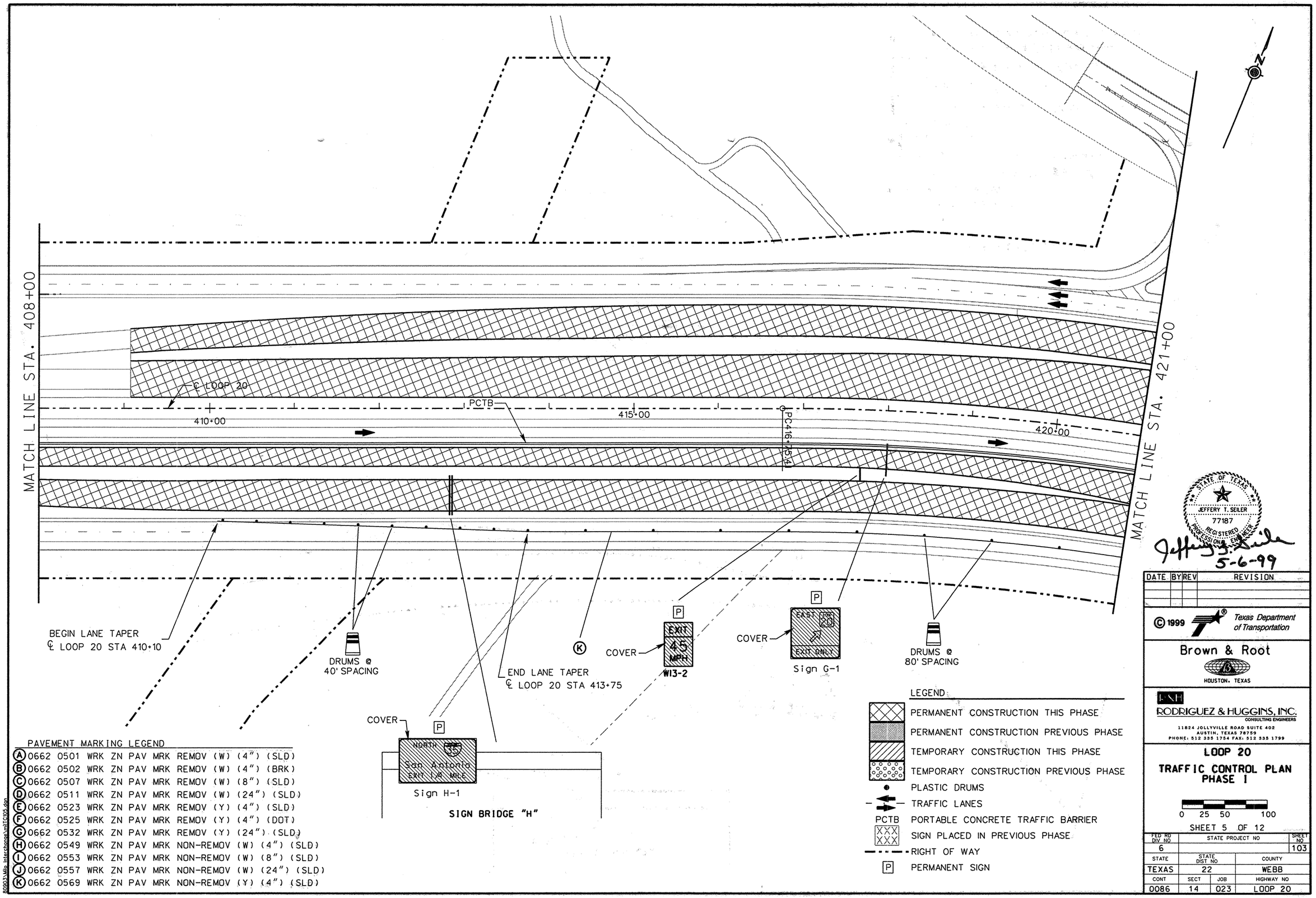

PAVEMENT MARKING LEGEND

(A) 0662 0501 WRK ZN PAV MRK REMOV (W) (4") (SLD)
(B) 0662 0502 WRK ZN PAV MRK REMOV (W) (4") (BRK)
(C) 0662 0507 WRK ZN PAV MRK REMOV (W) (8") (SLD)
(D) 0662 0511 WRK ZN PAV MRK REMOV (W) (24") (SLD)
(E) 0662 0523 WRK ZN PAV MRK REMOV (Y) (4") (SLD)
(F) 0662 0525 WRK ZN PAV MRK REMOV (Y) (4") (DOT)
(G) 0662 0532 WRK ZN PAV MRK REMOV (Y) (24") (SLD)
(H) 0662 0549 WRK ZN PAV MRK NON-REMOV (W) (4") (SLD)
(I) 0662 0553 WRK ZN PAV MRK NON-REMOV (W) (8") (SLD)
(J) 0662 0557 WRK ZN PAV MRK NON-REMOV (W) (24") (SLD)
(K) 0662 0569 WRK ZN PAV MRK NON-REMOV (Y) (4") (SLD)

80903\Mlo Interchange\mlTC05.dgn

STATE OF TEXAS
JEFFERY T. SEILER
77187
REGISTERED PROFESSIONAL ENGINEER

Jeffery T. Seiler
5-6-99

DATE	BY	REV	REVISION

© 1999 Texas Department of Transportation

Brown & Root
HOUSTON, TEXAS

RHI
RODRIGUEZ & HUGGINS, INC.
CONSULTING ENGINEERS
11824 JOLLYVILLE ROAD SUITE 402
AUSTIN, TEXAS 78759
PHONE: 512 335 1754 FAX: 512 335 1799

LOOP 20

TRAFFIC CONTROL PLAN
PHASE I

0 25 50 100

SHEET 5 OF 12

FED RD DIV NO	STATE PROJECT NO		SHEET NO
6			103
STATE	STATE DIST NO		COUNTY
TEXAS	22		WEBB
CONT	SECT	JOB	HIGHWAY NO
0086	14	023	LOOP 20

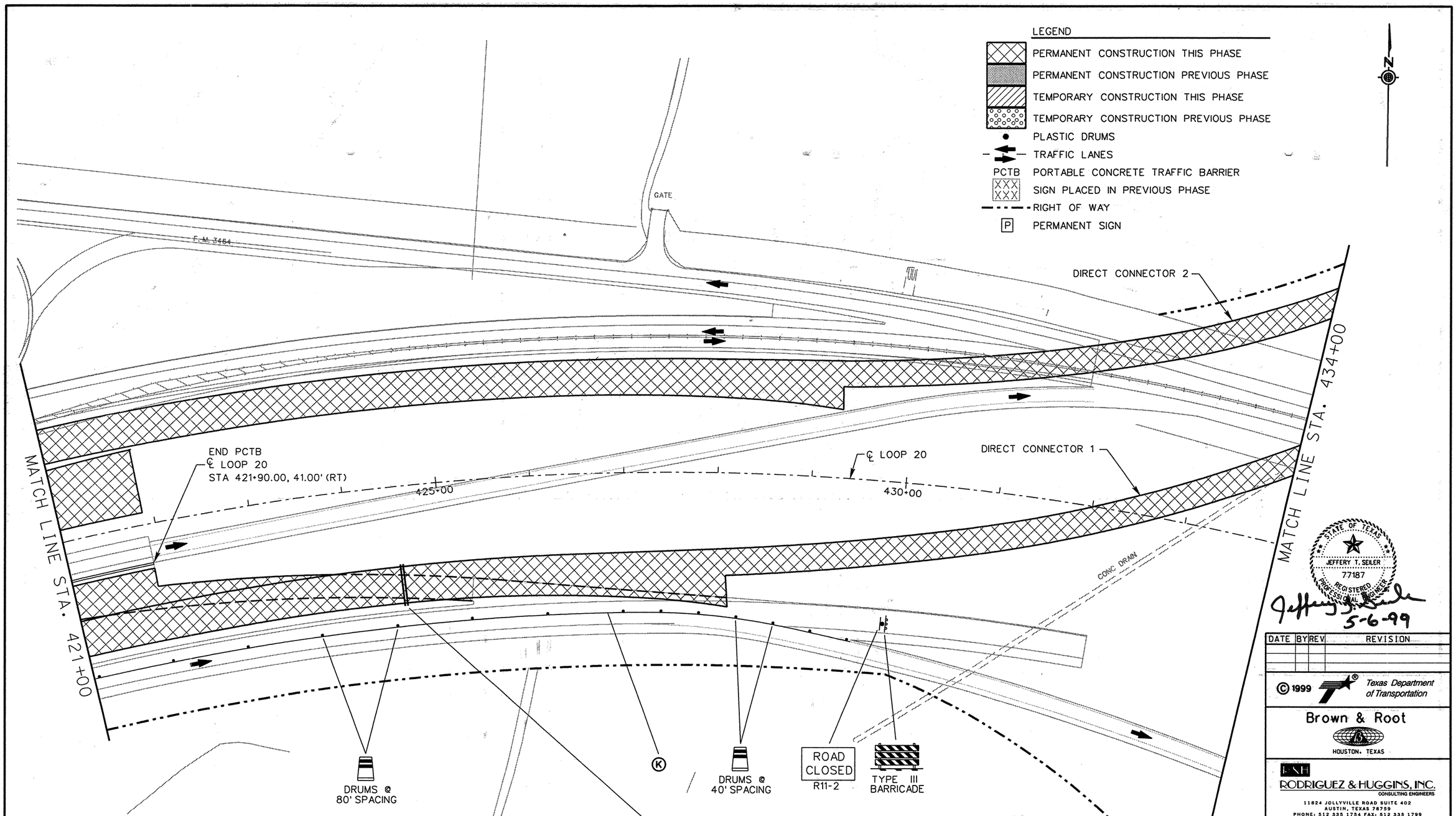

PAVEMENT MARKING LEGEND

A	0662 0501 WRK ZN PAV MRK REMOV (W) (4") (SLD)
B	0662 0502 WRK ZN PAV MRK REMOV (W) (4") (BRK)
C	0662 0507 WRK ZN PAV MRK REMOV (W) (8") (SLD)
D	0662 0511 WRK ZN PAV MRK REMOV (W) (24") (SLD)
E	0662 0523 WRK ZN PAV MRK REMOV (Y) (4") (SLD)
F	0662 0525 WRK ZN PAV MRK REMOV (Y) (4") (DOT)
G	0662 0532 WRK ZN PAV MRK REMOV (Y) (24") (SLD)
H	0662 0549 WRK ZN PAV MRK NON-REMOV (W) (4") (SLD)
I	0662 0553 WRK ZN PAV MRK NON-REMOV (W) (8") (SLD)
J	0662 0557 WRK ZN PAV MRK NON-REMOV (W) (24") (SLD)
K	0662 0569 WRK ZN PAV MRK NON-REMOV (Y) (4") (SLD)

STATE OF TEXAS
JEFFERY T. SEILER
77187
REGISTERED PROFESSIONAL ENGINEER

Jeffery T. Seiler
5-6-99

DATE	BY	REV	REVISION

© 1999 Texas Department of Transportation

Brown & Root
HOUSTON, TEXAS

RODRIGUEZ & HUGGINS, INC.
CONSULTING ENGINEERS
11824 JOLLYVILLE ROAD SUITE 402
AUSTIN, TEXAS 78759
PHONE: 512 335 1754 FAX: 512 335 1799

LOOP 20
TRAFFIC CONTROL PLAN
PHASE I

0 25 50 100

SHEET 6 OF 12

FED RD DIV NO	STATE PROJECT NO		SHEET NO
6			104
STATE	STATE DIST NO		COUNTY
TEXAS	22		WEBB
CONT	SECT	JOB	HIGHWAY NO
0086	14	023	LOOP 20

80903\Milo Interchange\mITC106.dgn

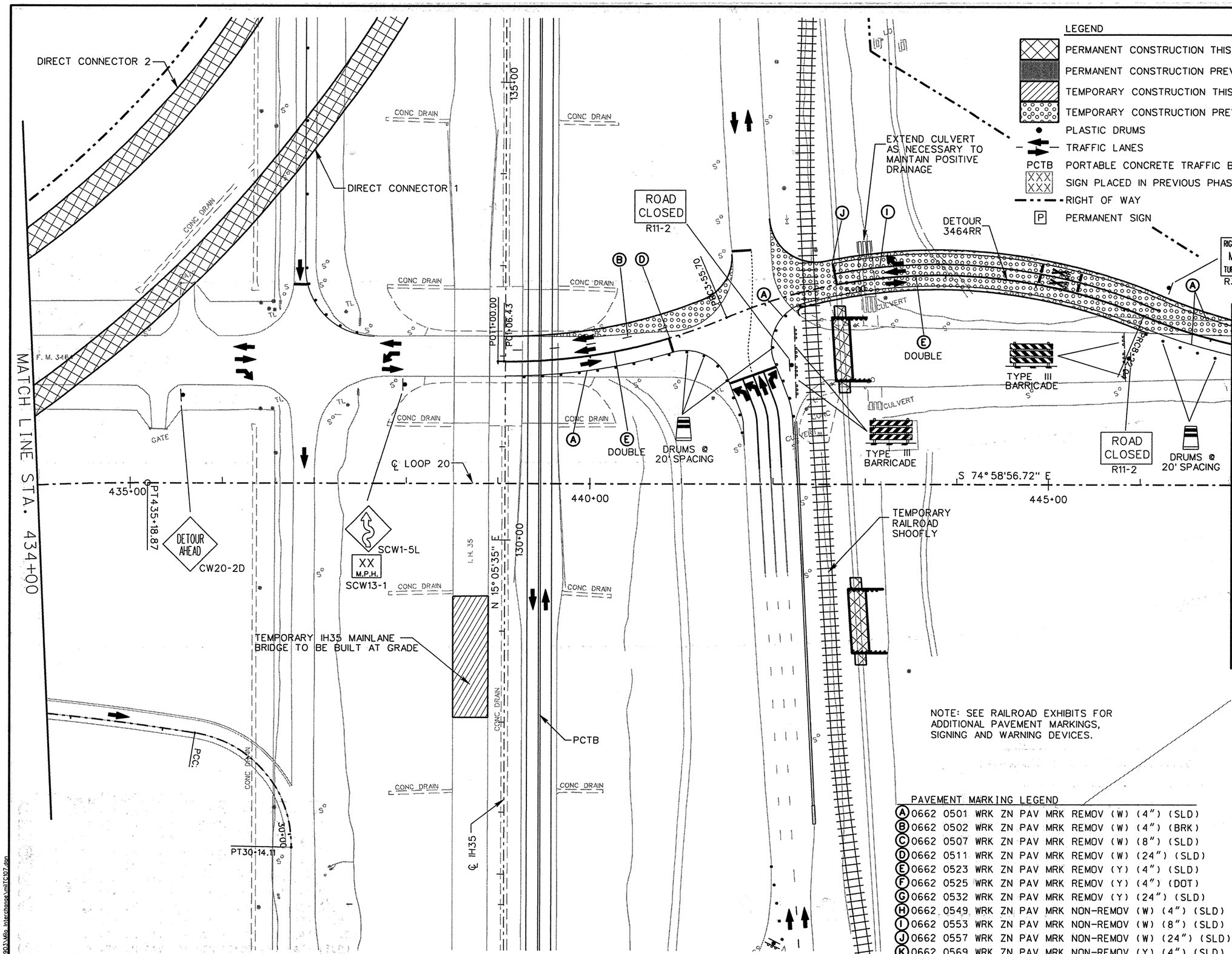

LEGEND

- PERMANENT CONSTRUCTION THIS PHASE
- PERMANENT CONSTRUCTION PREVIOUS PHASE
- TEMPORARY CONSTRUCTION THIS PHASE
- TEMPORARY CONSTRUCTION PREVIOUS PHASE *
- PLASTIC DRUMS
- TRAFFIC LANES
- PCTB PORTABLE CONCRETE TRAFFIC BARRIER
- XXX SIGN PLACED IN PREVIOUS PHASE
- RIGHT OF WAY
- P PERMANENT SIGN

* TO BE CONSTRUCTED PRIOR TO BEGINNING PHASE I OPERATIONS.

NOTE: SEE RAILROAD EXHIBITS FOR ADDITIONAL PAVEMENT MARKINGS, SIGNING AND WARNING DEVICES.

PAVEMENT MARKING LEGEND

A	0662	0501	WRK	ZN	PAV	MRK	REMOV	(W)	(4") (SLD)
B	0662	0502	WRK	ZN	PAV	MRK	REMOV	(W)	(4") (BRK)
C	0662	0507	WRK	ZN	PAV	MRK	REMOV	(W)	(8") (SLD)
D	0662	0511	WRK	ZN	PAV	MRK	REMOV	(W)	(24") (SLD)
E	0662	0523	WRK	ZN	PAV	MRK	REMOV	(Y)	(4") (SLD)
F	0662	0525	WRK	ZN	PAV	MRK	REMOV	(Y)	(4") (DOT)
G	0662	0532	WRK	ZN	PAV	MRK	REMOV	(Y)	(24") (SLD)
H	0662	0549	WRK	ZN	PAV	MRK	NON-REMOV	(W)	(4") (SLD)
I	0662	0553	WRK	ZN	PAV	MRK	NON-REMOV	(W)	(8") (SLD)
J	0662	0557	WRK	ZN	PAV	MRK	NON-REMOV	(W)	(24") (SLD)
K	0662	0569	WRK	ZN	PAV	MRK	NON-REMOV	(Y)	(4") (SLD)

STATE OF TEXAS
JEFFERY T. SEILER
77187
REGISTERED PROFESSIONAL ENGINEER

Jeffery T. Seiler 5-13-99

DATE	BY	REV	REVISION

© 1999 Texas Department of Transportation

Brown & Root
HOUSTON, TEXAS

RODRIGUEZ & HUGGINS, INC.
CONSULTING ENGINEERS
11824 JOLLYVILLE ROAD SUITE 402
AUSTIN, TEXAS 78759
PHONE: 512 335 1754 FAX: 512 335 1799

LOOP 20
TRAFFIC CONTROL PLAN PHASE I

0 25 50 100

SHEET 7 OF 12

FED RD DIV NO	STATE PROJECT NO		SHEET NO
6			105
STATE	STATE DIST NO		COUNTY
TEXAS	22		WEBB
CONT	SECT	JOB	HIGHWAY NO
0086	14	023	LOOP 20

80903\Milo Interchange\mlTC107.dgn

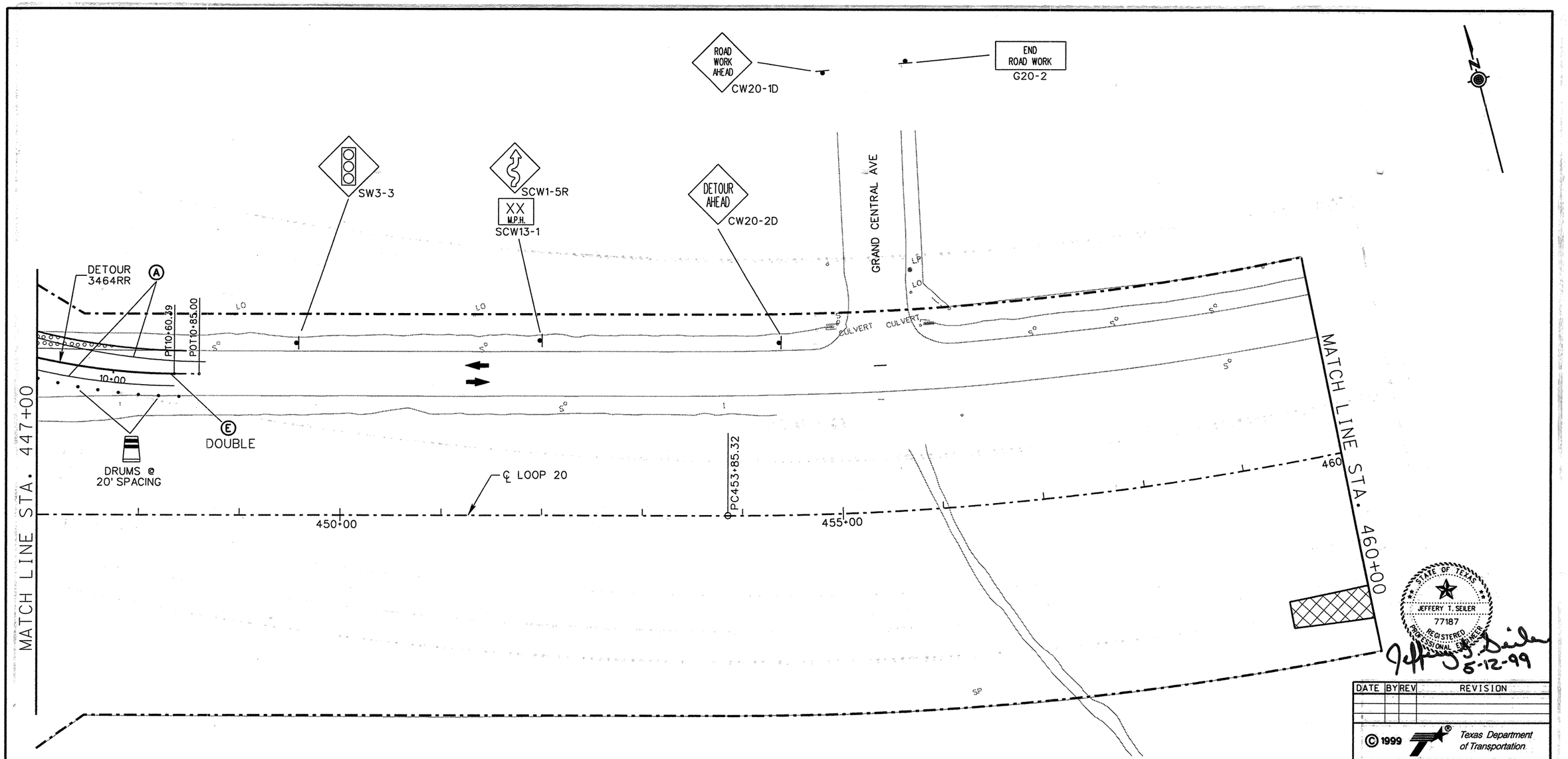

STATE OF TEXAS
JEFFERY T. SEILER
77187
REGISTERED PROFESSIONAL ENGINEER

Jeffery T. Seiler 5-12-99

PAVEMENT MARKING LEGEND

A	0662	0501	WRK	ZN	PAV	MRK	REMOV	(W)	(4")	(SLD)
B	0662	0502	WRK	ZN	PAV	MRK	REMOV	(W)	(4")	(BRK)
C	0662	0507	WRK	ZN	PAV	MRK	REMOV	(W)	(8")	(SLD)
D	0662	0511	WRK	ZN	PAV	MRK	REMOV	(W)	(24")	(SLD)
E	0662	0523	WRK	ZN	PAV	MRK	REMOV	(Y)	(4")	(SLD)
F	0662	0525	WRK	ZN	PAV	MRK	REMOV	(Y)	(4")	(DOT)
G	0662	0532	WRK	ZN	PAV	MRK	REMOV	(Y)	(24")	(SLD)
H	0662	0549	WRK	ZN	PAV	MRK	NON-REMOV	(W)	(4")	(SLD)
I	0662	0553	WRK	ZN	PAV	MRK	NON-REMOV	(W)	(8")	(SLD)
J	0662	0557	WRK	ZN	PAV	MRK	NON-REMOV	(W)	(24")	(SLD)
K	0662	0569	WRK	ZN	PAV	MRK	NON-REMOV	(Y)	(4")	(SLD)

*TO BE CONSTRUCTED PRIOR TO BEGINNING PHASE I OPERATIONS.

LEGEND

- PERMANENT CONSTRUCTION THIS PHASE
- PERMANENT CONSTRUCTION PREVIOUS PHASE
- TEMPORARY CONSTRUCTION THIS PHASE
- TEMPORARY CONSTRUCTION PREVIOUS PHASE*
- PLASTIC DRUMS
- TRAFFIC LANES
- PCTB PORTABLE CONCRETE TRAFFIC BARRIER
- XXX SIGN PLACED IN PREVIOUS PHASE
- RIGHT OF WAY
- P PERMANENT SIGN

DATE	BY	REV	REVISION

© 1999 Texas Department of Transportation

Brown & Root
HOUSTON, TEXAS

RODRIGUEZ & HUGGINS, INC.
CONSULTING ENGINEERS
11824 JOLLYVILLE ROAD SUITE 402
AUSTIN, TEXAS 78759
PHONE: 512 335 1754 FAX: 512 335 1799

LOOP 20
TRAFFIC CONTROL PLAN PHASE I

0 25 50 100

SHEET 8 OF 12

FED RD DIV NO	STATE PROJECT NO		SHEET NO
6			106
STATE	STATE DIST NO		COUNTY
TEXAS	22		WEBB
CONT	SECT	JOB	HIGHWAY NO
0086	14	023	LOOP 20

80903\Mlo_Interchange\mlTC108.dgn

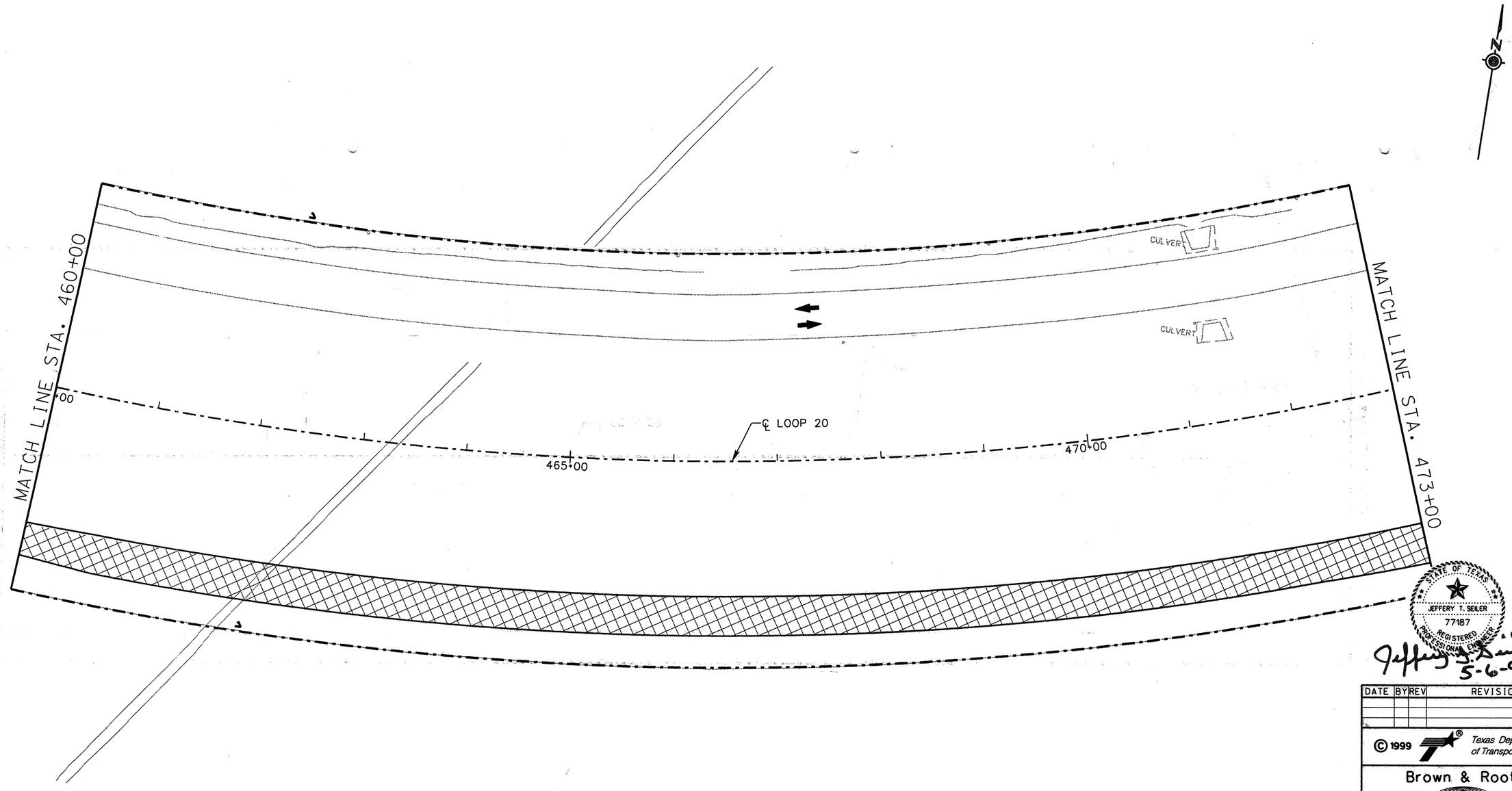

PAVEMENT MARKING LEGEND

(A) 0662 0501 WRK ZN PAV MRK REMOV (W) (4") (SLD)
(B) 0662 0502 WRK ZN PAV MRK REMOV (W) (4") (BRK)
(C) 0662 0507 WRK ZN PAV MRK REMOV (W) (8") (SLD)
(D) 0662 0511 WRK ZN PAV MRK REMOV (W) (24") (SLD)
(E) 0662 0523 WRK ZN PAV MRK REMOV (Y) (4") (SLD)
(F) 0662 0525 WRK ZN PAV MRK REMOV (Y) (4") (DOT)
(G) 0662 0532 WRK ZN PAV MRK REMOV (Y) (24") (SLD)
(H) 0662 0549 WRK ZN PAV MRK NON-REMOV (W) (4") (SLD)
(I) 0662 0553 WRK ZN PAV MRK NON-REMOV (W) (8") (SLD)
(J) 0662 0557 WRK ZN PAV MRK NON-REMOV (W) (24") (SLD)
(K) 0662 0569 WRK ZN PAV MRK NON-REMOV (Y) (4") (SLD)

LEGEND

- PERMANENT CONSTRUCTION THIS PHASE
- PERMANENT CONSTRUCTION PREVIOUS PHASE
- TEMPORARY CONSTRUCTION THIS PHASE
- TEMPORARY CONSTRUCTION PREVIOUS PHASE
- PLASTIC DRUMS
- TRAFFIC LANES
- PCTB — PORTABLE CONCRETE TRAFFIC BARRIER
- XXX XXX — SIGN PLACED IN PREVIOUS PHASE
- RIGHT OF WAY
- P — PERMANENT SIGN

STATE OF TEXAS
JEFFERY T. SEILER
77187
REGISTERED
PROFESSIONAL ENGINEER

Jeffery T. Seiler
5-6-99

DATE	BY	REV	REVISION

© 1999 Texas Department of Transportation

Brown & Root
HOUSTON, TEXAS

RODRIGUEZ & HUGGINS, INC.
CONSULTING ENGINEERS
11824 JOLLYVILLE ROAD SUITE 402
AUSTIN, TEXAS 78759
PHONE: 512 335 1754 FAX: 512 335 1799

LOOP 20

TRAFFIC CONTROL PLAN
PHASE I

0 25 50 100

SHEET 9 OF 12

FED RD DIV NO	STATE PROJECT NO		SHEET NO
6			107
STATE	STATE DIST NO		COUNTY
TEXAS	22		WEBB
CONT	SECT	JOB	HIGHWAY NO
0086	14	023	LOOP 20

80903\Mlo_interchange\rmtfc109.dgn

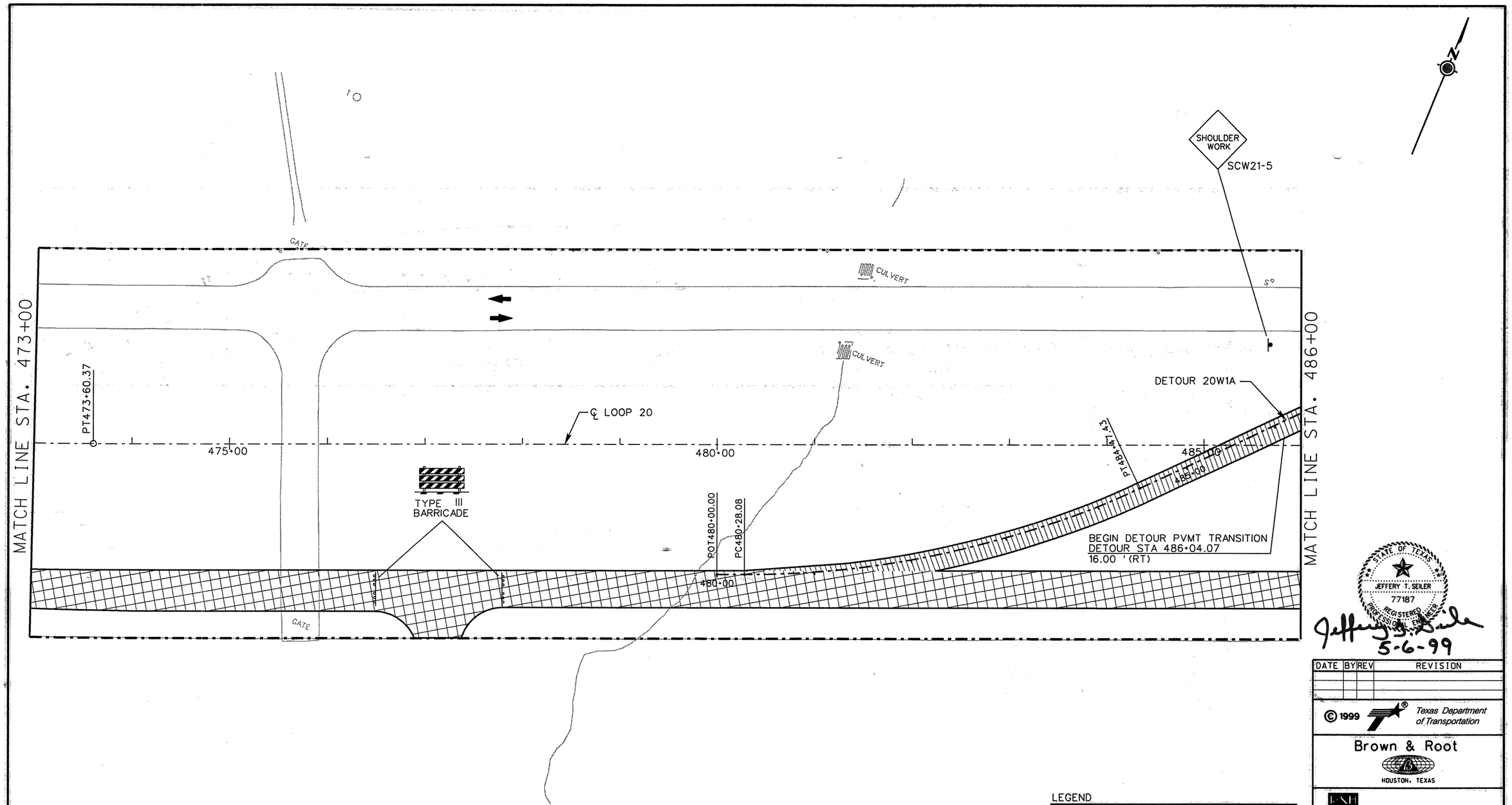

PAVEMENT MARKING LEGEND

(A) 0662 0501 WRK ZN PAV MRK REMOV (W) (4") (SLD)
(B) 0662 0502 WRK ZN PAV MRK REMOV (W) (4") (BRK)
(C) 0662 0507 WRK ZN PAV MRK REMOV (W) (8") (SLD)
(D) 0662 0511 WRK ZN PAV MRK REMOV (W) (24") (SLD)
(E) 0662 0523 WRK ZN PAV MRK REMOV (Y) (4") (SLD)
(F) 0662 0525 WRK ZN PAV MRK REMOV (Y) (4") (DOT)
(G) 0662 0532 WRK ZN PAV MRK REMOV (Y) (24") (SLD)
(H) 0662 0549 WRK ZN PAV MRK NON-REMOV (W) (4") (SLD)
(I) 0662 0553 WRK ZN PAV MRK NON-REMOV (W) (8") (SLD)
(J) 0662 0557 WRK ZN PAV MRK NON-REMOV (W) (24") (SLD)
(K) 0662 0569 WRK ZN PAV MRK NON-REMOV (Y) (4") (SLD)

LEGEND

- PERMANENT CONSTRUCTION THIS PHASE
- PERMANENT CONSTRUCTION PREVIOUS PHASE
- TEMPORARY CONSTRUCTION THIS PHASE
- TEMPORARY CONSTRUCTION PREVIOUS PHASE
- PLASTIC DRUMS
- TRAFFIC LANES
- PCTB PORTABLE CONCRETE TRAFFIC BARRIER
- XXX XXX SIGN PLACED IN PREVIOUS PHASE
- RIGHT OF WAY
- P PERMANENT SIGN

STATE OF TEXAS
JEFFERY T. SEILER
77187
REGISTERED PROFESSIONAL ENGINEER

Jeffery T. Seiler
5-6-99

DATE	BY	REV	REVISION

© 1999
Texas Department of Transportation

Brown & Root
HOUSTON, TEXAS

RODRIGUEZ & HUGGINS, INC.
CONSULTING ENGINEERS
11824 JOLLYVILLE ROAD SUITE 402
AUSTIN, TEXAS 78759
PHONE: 512 335 1754 FAX: 512 335 1799

LOOP 20
TRAFFIC CONTROL PLAN PHASE I

0 25 50 100

SHEET 10 OF 12

FED RD DIV NO	STATE PROJECT NO		SHEET NO
6			108
STATE	STATE DIST NO		COUNTY
TEXAS	22		WEBB
CONT	SECT	JOB	HIGHWAY NO
0086	14	023	LOOP 20

80903\Milo Interchange\mslTC110.dgn

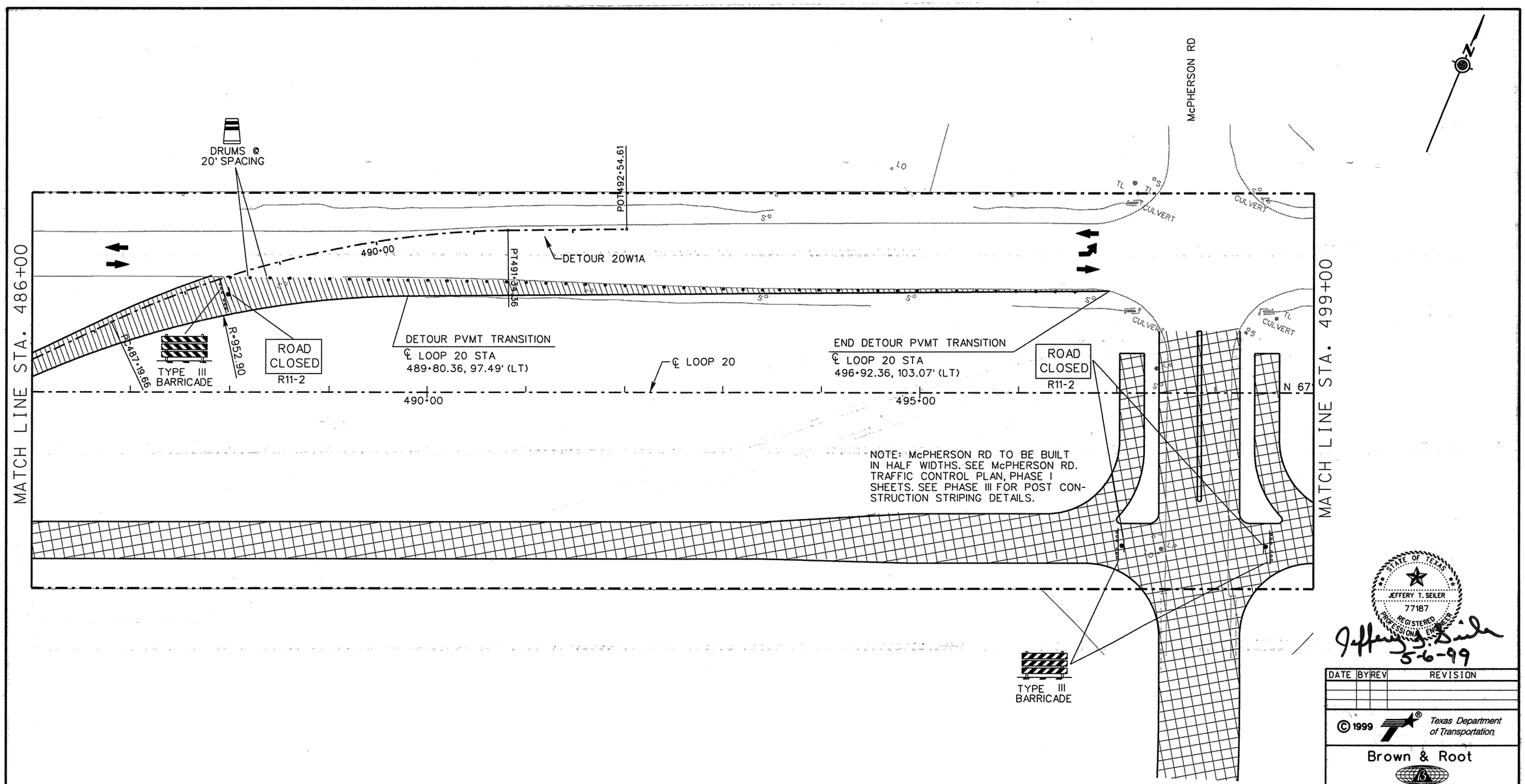

PAVEMENT MARKING LEGEND

(A) 0662 0501 WRK ZN PAV MRK REMOV (W) (4") (SLD)
(B) 0662 0502 WRK ZN PAV MRK REMOV (W) (4") (BRK)
(C) 0662 0507 WRK ZN PAV MRK REMOV (W) (8") (SLD)
(D) 0662 0511 WRK ZN PAV MRK REMOV (W) (24") (SLD)
(E) 0662 0523 WRK ZN PAV MRK REMOV (Y) (4") (SLD)
(F) 0662 0525 WRK ZN PAV MRK REMOV (Y) (4") (DOT)
(G) 0662 0532 WRK ZN PAV MRK REMOV (Y) (24") (SLD)
(H) 0662 0549 WRK ZN PAV MRK NON-REMOV (W) (4") (SLD)
(I) 0662 0553 WRK ZN PAV MRK NON-REMOV (W) (8") (SLD)
(J) 0662 0557 WRK ZN PAV MRK NON-REMOV (W) (24") (SLD)
(K) 0662 0569 WRK ZN PAV MRK NON-REMOV (Y) (4") (SLD)

LEGEND

- PERMANENT CONSTRUCTION THIS PHASE
- PERMANENT CONSTRUCTION PREVIOUS PHASE
- TEMPORARY CONSTRUCTION THIS PHASE
- TEMPORARY CONSTRUCTION PREVIOUS PHASE
- PLASTIC DRUMS
- TRAFFIC LANES
- PCTB — PORTABLE CONCRETE TRAFFIC BARRIER
- SIGN PLACED IN PREVIOUS PHASE
- RIGHT OF WAY
- P — PERMANENT SIGN

STATE OF TEXAS
JEFFERY T. SEILER
77187
REGISTERED PROFESSIONAL ENGINEER

5-6-99

DATE	BY	REV	REVISION

© 1999 Texas Department of Transportation

Brown & Root
HOUSTON, TEXAS

RODRIGUEZ & HUGGINS, INC.
CONSULTING ENGINEERS
11824 JOLLYVILLE ROAD SUITE 402
AUSTIN, TEXAS 78759
PHONE: 512 335 1784 FAX: 512 335 1799

LOOP 20

TRAFFIC CONTROL PLAN PHASE I

0 25 50 100

SHEET 11 OF 12

FED RD DIV NO	STATE PROJECT NO		SHEET NO
6			109
STATE	STATE DIST NO		COUNTY
TEXAS	22		WEBB
CONT	SECT	JOB	HIGHWAY NO
0086	14	023	LOOP 20

80903\Mlb Interchange\maTC11.dgn

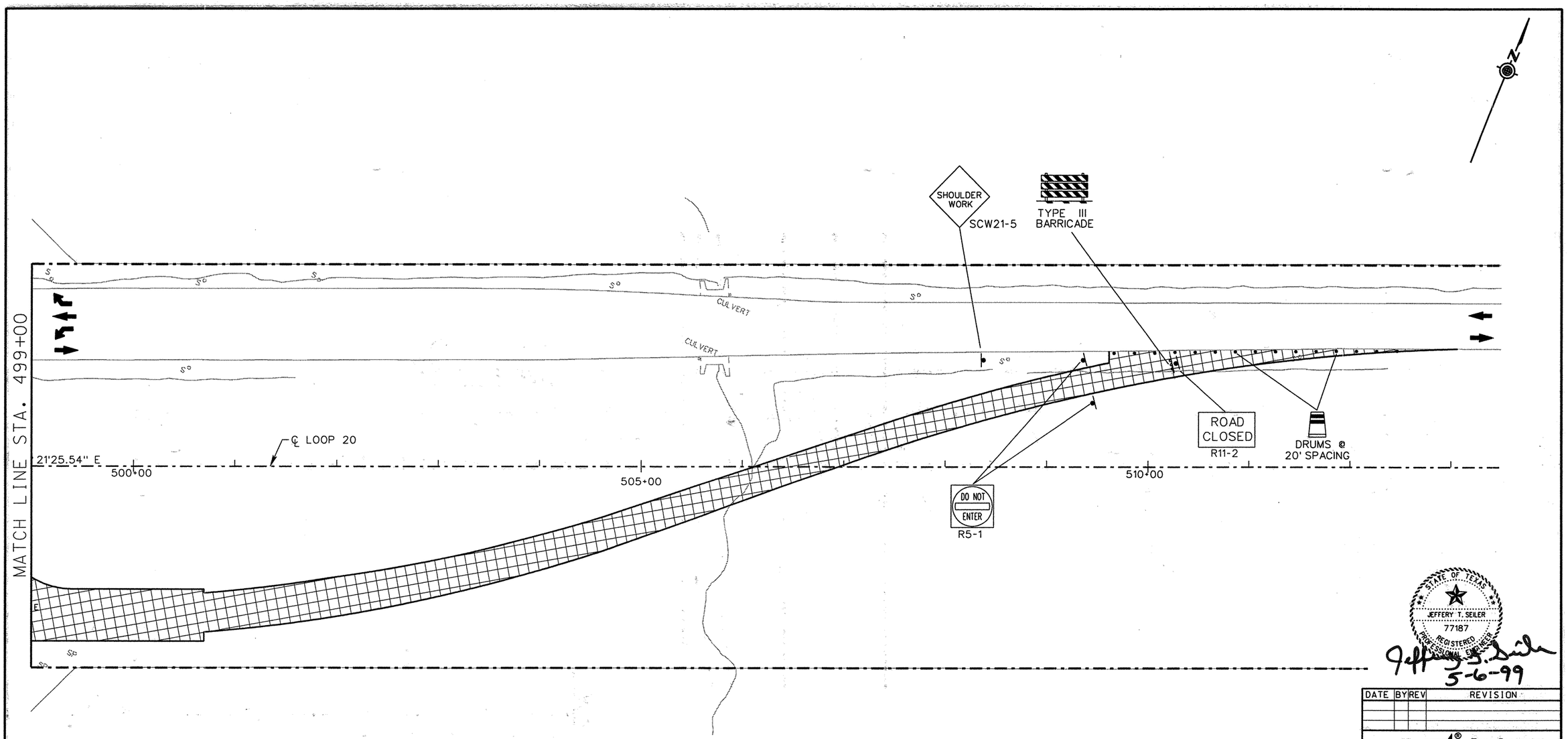

PAVEMENT MARKING LEGEND

A	0662 0501 WRK ZN PAV MRK REMOV (W) (4") (SLD)
B	0662 0502 WRK ZN PAV MRK REMOV (W) (4") (BRK)
C	0662 0507 WRK ZN PAV MRK REMOV (W) (8") (SLD)
D	0662 0511 WRK ZN PAV MRK REMOV (W) (24") (SLD)
E	0662 0523 WRK ZN PAV MRK REMOV (Y) (4") (SLD)
F	0662 0525 WRK ZN PAV MRK REMOV (Y) (4") (DOT)
G	0662 0532 WRK ZN PAV MRK REMOV (Y) (24") (SLD)
H	0662 0549 WRK ZN PAV MRK NON-REMOV (W) (4") (SLD)
I	0662 0553 WRK ZN PAV MRK NON-REMOV (W) (8") (SLD)
J	0662 0557 WRK ZN PAV MRK NON-REMOV (W) (24") (SLD)
K	0662 0569 WRK ZN PAV MRK NON-REMOV (Y) (4") (SLD)

LEGEND

- PERMANENT CONSTRUCTION THIS PHASE
- PERMANENT CONSTRUCTION PREVIOUS PHASE
- TEMPORARY CONSTRUCTION THIS PHASE
- TEMPORARY CONSTRUCTION PREVIOUS PHASE
- PLASTIC DRUMS
- TRAFFIC LANES
- PCTB PORTABLE CONCRETE TRAFFIC BARRIER
- XXX XXX SIGN PLACED IN PREVIOUS PHASE
- RIGHT OF WAY
- P PERMANENT SIGN

STATE OF TEXAS
JEFFERY T. SEILER
77187
REGISTERED PROFESSIONAL ENGINEER

Jeffery T. Seiler
5-6-99

DATE	BY	REV	REVISION

© 1999 Texas Department of Transportation

Brown & Root
HOUSTON, TEXAS

RODRIGUEZ & HUGGINS, INC.
CONSULTING ENGINEERS
11824 JOLLYVILLE ROAD SUITE 402
AUSTIN, TEXAS 78759
PHONE: 512 335 1754 FAX: 512 335 1799

LOOP 20
TRAFFIC CONTROL PLAN PHASE I

0 25 50 100

SHEET 12 OF 12

FED RD DIV NO	STATE PROJECT NO		SHEET NO
6			110
STATE	STATE DIST NO		COUNTY
TEXAS	22		WEBB
CONT	SECT	JOB	HIGHWAY NO
0086	14	023	LOOP 20

80903\Milo Interchange\mlTC112.dgn

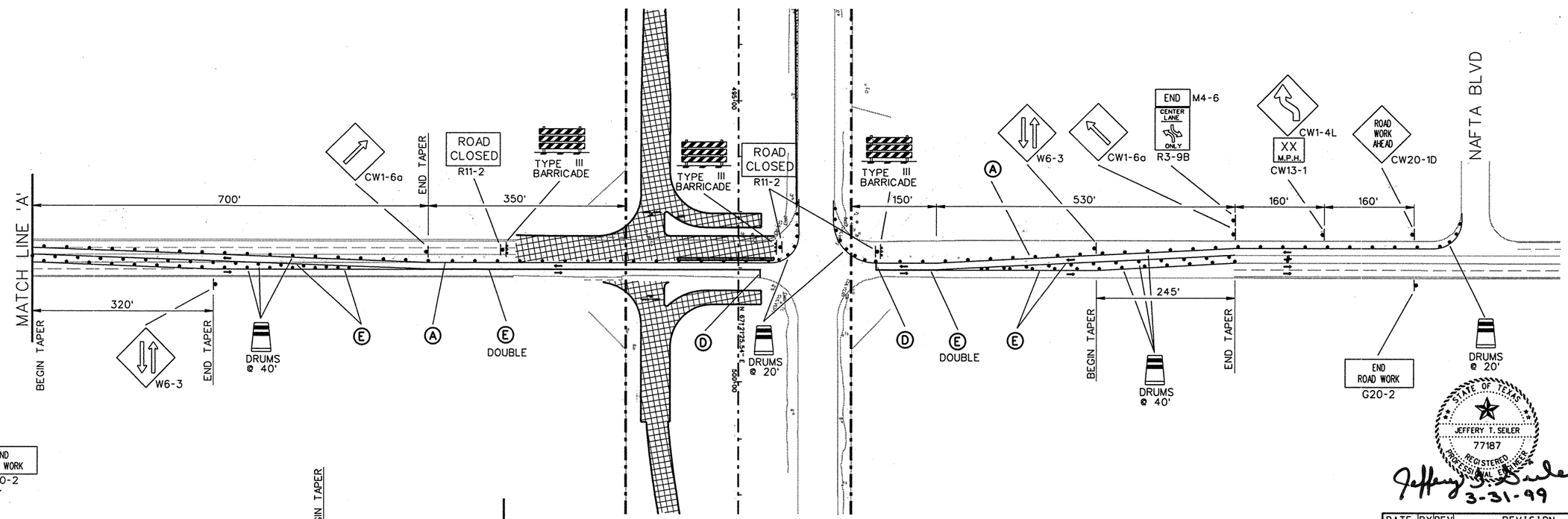

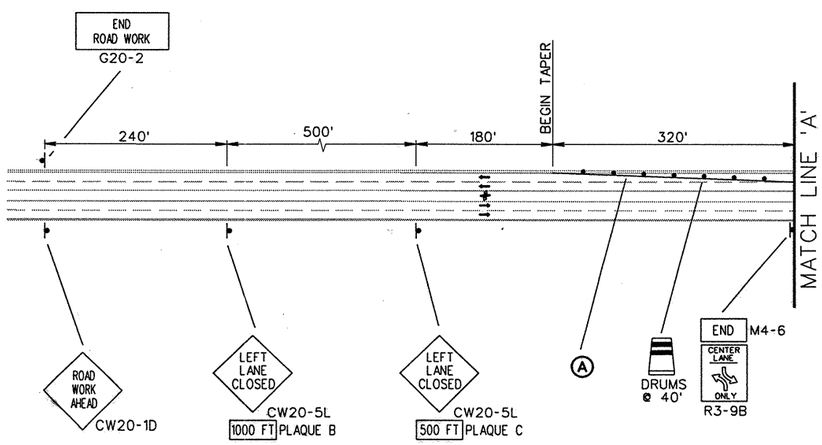

LEGEND

- PERMANENT CONSTRUCTION THIS PHASE
- PERMANENT CONSTRUCTION PREVIOUS PHASE
- TEMPORARY CONSTRUCTION THIS PHASE
- TEMPORARY CONSTRUCTION PREVIOUS PHASE
- ● PLASTIC DRUMS
- — TRAFFIC LANES
- PCTB PORTABLE CONCRETE TRAFFIC BARRIER
- XXX XXX SIGN PLACED IN PREVIOUS PHASE

PAVEMENT MARKING LEGEND

(A)	0662	0501	WRK ZN PAV MRK REMOV	(W)	(4")	(SLD)
(B)	0662	0502	WRK ZN PAV MRK REMOV	(W)	(4")	(BRK)
(C)	0662	0507	WRK ZN PAV MRK REMOV	(W)	(8")	(SLD)
(D)	0662	0511	WRK ZN PAV MRK REMOV	(W)	(24")	(SLD)
(E)	0662	0523	WRK ZN PAV MRK REMOV	(Y)	(4")	(SLD)
(F)	0662	0525	WRK ZN PAV MRK REMOV	(Y)	(4")	(DOT)
(G)	0662	0532	WRK ZN PAV MRK REMOV	(Y)	(24")	(SLD)
(H)	0662	0549	WRK ZN PAV MRK NON-REMOV	(W)	(4")	(SLD)
(I)	0662	0553	WRK ZN PAV MRK NON-REMOV	(W)	(8")	(SLD)
(J)	0662	0557	WRK ZN PAV MRK NON-REMOV	(W)	(24")	(SLD)
(K)	0662	0569	WRK ZN PAV MRK NON-REMOV	(Y)	(4")	(SLD)

STATE OF TEXAS
JEFFERY T. SEILER
77187
REGISTERED PROFESSIONAL ENGINEER

Jeffery T. Seiler
3-31-99

DATE	BY	REV	REVISION

© 1999 Texas Department of Transportation

Brown & Root
HOUSTON, TEXAS

RODRIGUEZ & HUGGINS, INC.
CONSULTING ENGINEERS
11824 JOLLYVILLE ROAD SUITE 402
AUSTIN, TEXAS 78759
PHONE: 512 335 1754 FAX: 512 335 1799

McPHERSON ROAD
TRAFFIC CONTROL PLAN
PHASE 1
STAGE 1

0 50 100 200

SHEET 1 OF 2

FED RD DIV NO	STATE PROJECT NO		SHEET NO
6			111
STATE	STATE DIST NO		COUNTY
TEXAS	22		WEBB
CONT	SECT	JOB	HIGHWAY NO
0086	14	023	LOOP 20

p:\81601\mslc151

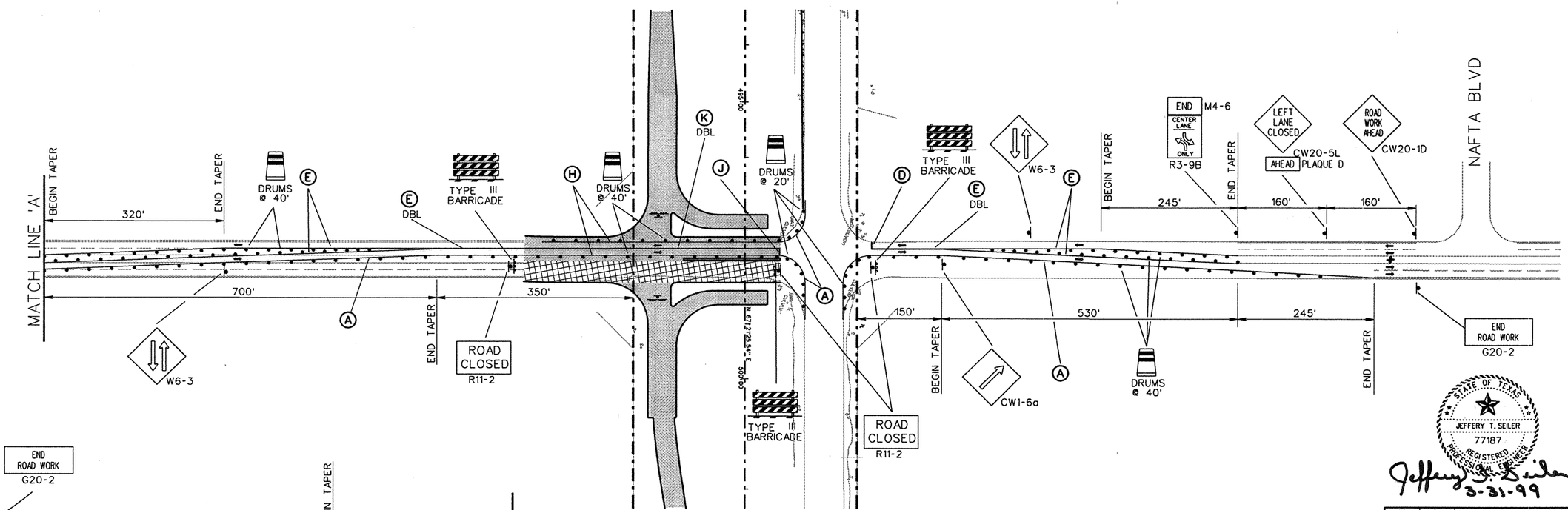

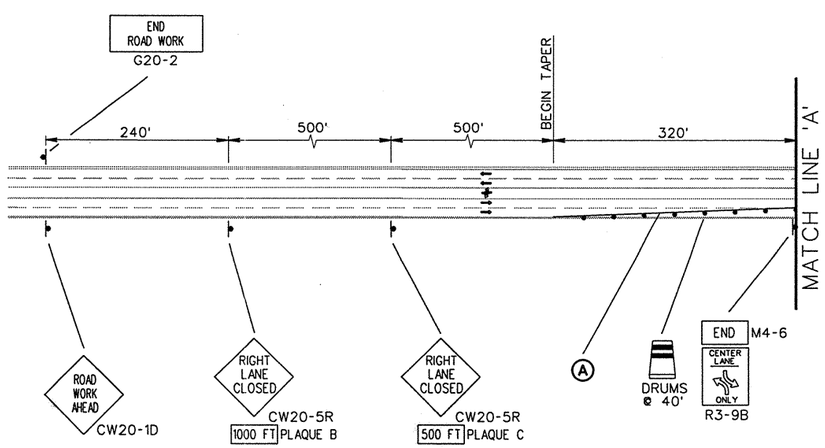

LEGEND

- PERMANENT CONSTRUCTION THIS PHASE
- PERMANENT CONSTRUCTION PREVIOUS STAGE
- TEMPORARY CONSTRUCTION THIS PHASE
- TEMPORARY CONSTRUCTION PREVIOUS PHASE
- ● PLASTIC DRUMS
- — TRAFFIC LANES
- PCTB PORTABLE CONCRETE TRAFFIC BARRIER
- XXX XXX SIGN PLACED IN PREVIOUS PHASE

PAVEMENT MARKING LEGEND

(A)	0662	0501	WRK	ZN	PAV	MRK	REMOV	(W)	(4") (SLD)
(B)	0662	0502	WRK	ZN	PAV	MRK	REMOV	(W)	(4") (BRK)
(C)	0662	0507	WRK	ZN	PAV	MRK	REMOV	(W)	(8") (SLD)
(D)	0662	0511	WRK	ZN	PAV	MRK	REMOV	(W)	(24") (SLD)
(E)	0662	0523	WRK	ZN	PAV	MRK	REMOV	(Y)	(4") (SLD)
(F)	0662	0525	WRK	ZN	PAV	MRK	REMOV	(Y)	(4") (DOT)
(G)	0662	0532	WRK	ZN	PAV	MRK	REMOV	(Y)	(24") (SLD)
(H)	0662	0549	WRK	ZN	PAV	MRK	NON-REMOV	(W)	(4") (SLD)
(I)	0662	0553	WRK	ZN	PAV	MRK	NON-REMOV	(W)	(8") (SLD)
(J)	0662	0557	WRK	ZN	PAV	MRK	NON-REMOV	(W)	(24") (SLD)
(K)	0662	0569	WRK	ZN	PAV	MRK	NON-REMOV	(Y)	(4") (SLD)

STATE OF TEXAS
JEFFERY T. SEILER
77187
REGISTERED PROFESSIONAL ENGINEER

Jeffery T. Seiler 3-31-99

DATE	BY	REV	REVISION

© 1999 Texas Department of Transportation

Brown & Root
HOUSTON, TEXAS

RODRIGUEZ & HUGGINS, INC.
CONSULTING ENGINEERS
11824 JOLLYVILLE ROAD SUITE 402
AUSTIN, TEXAS 78759
PHONE: 512 335 1754 FAX: 512 335 1799

McPHERSON ROAD
TRAFFIC CONTROL PLAN
PHASE I
STAGE 2

0 50 100 200

SHEET 2 OF 2

FED RD DIV NO	STATE PROJECT NO		SHEET NO
6			112
STATE	STATE DIST NO		COUNTY
TEXAS	22		WEBB
CONT	SECT	JOB	HIGHWAY NO
0086	14	023	LOOP 20

p:\81601\mltc152

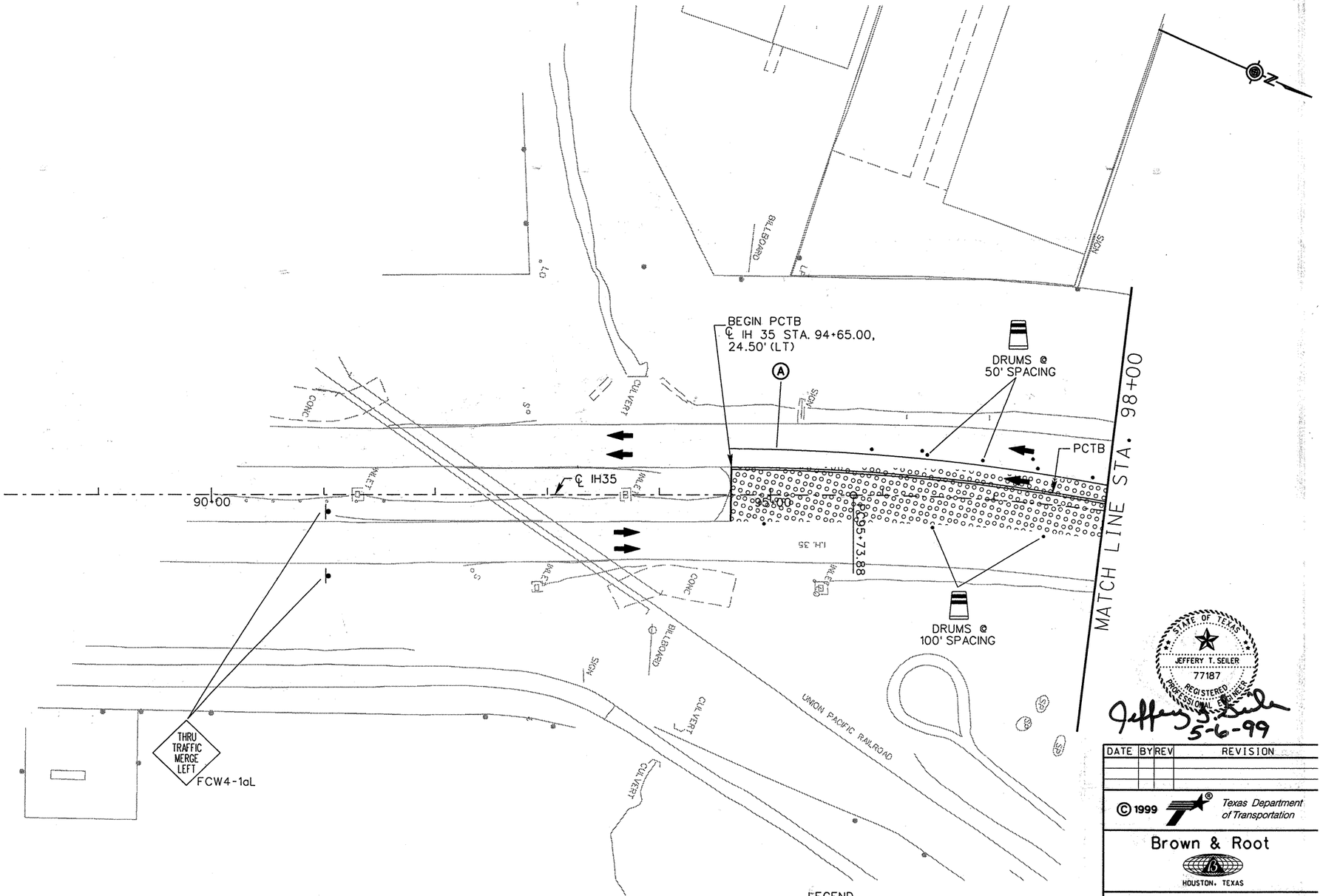

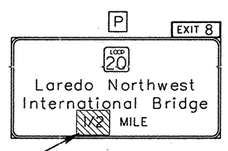

Sign 4

COVER WITH: 1/4

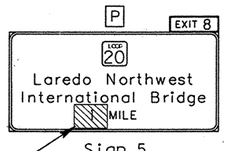

Sign 5

COVER WITH: 3/4

PAVEMENT MARKING LEGEND

(A) 0662 0501 WRK ZN PAV MRK REMOV (W) (4") (SLD)
(B) 0662 0502 WRK ZN PAV MRK REMOV (W) (4") (BRK)
(C) 0662 0507 WRK ZN PAV MRK REMOV (W) (8") (SLD)
(D) 0662 0511 WRK ZN PAV MRK REMOV (W) (24") (SLD)
(E) 0662 0523 WRK ZN PAV MRK REMOV (Y) (4") (SLD)
(F) 0662 0525 WRK ZN PAV MRK REMOV (Y) (4") (DOT)
(G) 0662 0532 WRK ZN PAV MRK REMOV (Y) (24") (SLD)
(H) 0662 0549 WRK ZN PAV MRK NON-REMOV (W) (4") (SLD)
(I) 0662 0553 WRK ZN PAV MRK NON-REMOV (W) (8") (SLD)
(J) 0662 0557 WRK ZN PAV MRK NON-REMOV (W) (24") (SLD)
(K) 0662 0569 WRK ZN PAV MRK NON-REMOV (Y) (4") (SLD)

*TO BE CONSTRUCTED PRIOR TO BEGINNING PHASE I OPERATIONS.

EEGEND

- PERMANENT CONSTRUCTION THIS PHASE
- PERMANENT CONSTRUCTION PREVIOUS PHASE
- TEMPORARY CONSTRUCTION THIS PHASE
- TEMPORARY CONSTRUCTION PREVIOUS PHASE*
- PLASTIC DRUMS
- TRAFFIC LANES
- PCTB — PORTABLE CONCRETE TRAFFIC BARRIER
- XXX XXX — SIGN PLACED IN PREVIOUS PHASE
- RIGHT OF WAY
- P — PERMANENT SIGN

STATE OF TEXAS
JEFFERY T. SEILER
77187
REGISTERED PROFESSIONAL ENGINEER

Jeffery T. Seiler
5-6-99

DATE	BY	REV	REVISION

© 1999 Texas Department of Transportation

Brown & Root
HOUSTON, TEXAS

RODRIGUEZ & HUGGINS, INC.
CONSULTING ENGINEERS
11824 JOLLYVILLE ROAD SUITE 402
AUSTIN, TEXAS 78759
PHONE: 512 335 1754 FAX: 512 335 1799

IH 35
TRAFFIC CONTROL PLAN PHASE I

0 25 50 100

SHEET 1 OF 9

FED RD DIV NO	STATE PROJECT NO		SHEET NO
6			113
STATE	STATE DIST NO		COUNTY
TEXAS	22		WEBB
CONT	SECT	JOB	HIGHWAY NO
0018	05	057	LOOP 20

80903\Mlo_Interchange\mlTC13.dgn

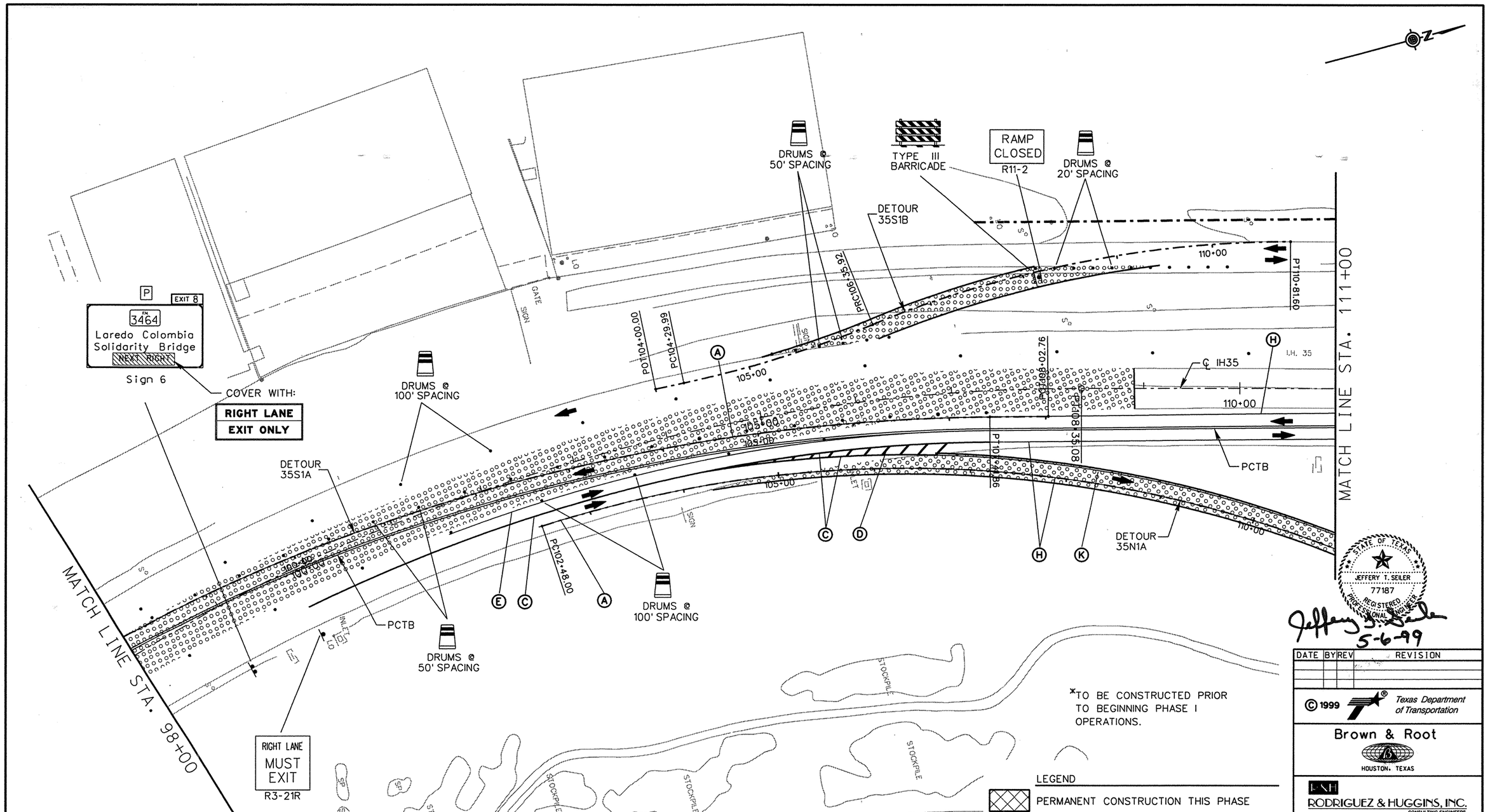

PAVEMENT MARKING LEGEND

(A) 0662 0501 WRK ZN PAV MRK REMOV (W) (4") (SLD)
(B) 0662 0502 WRK ZN PAV MRK REMOV (W) (4") (BRK)
(C) 0662 0507 WRK ZN PAV MRK REMOV (W) (8") (SLD)
(D) 0662 0511 WRK ZN PAV MRK REMOV (W) (24") (SLD)
(E) 0662 0523 WRK ZN PAV MRK REMOV (Y) (4") (SLD)
(F) 0662 0525 WRK ZN PAV MRK REMOV (Y) (4") (DOT)
(G) 0662 0532 WRK ZN PAV MRK REMOV (Y) (24") (SLD)
(H) 0662 0549 WRK ZN PAV MRK NON-REMOV (W) (4") (SLD)
(I) 0662 0553 WRK ZN PAV MRK NON-REMOV (W) (8") (SLD)
(J) 0662 0557 WRK ZN PAV MRK NON-REMOV (W) (24") (SLD)
(K) 0662 0569 WRK ZN PAV MRK NON-REMOV (Y) (4") (SLD)

80903\Villo Interchange\mlTC114.dgn

STATE OF TEXAS
JEFFERY T. SEILER
77187
REGISTERED PROFESSIONAL ENGINEER

Jeffery T. Seiler 5-6-99

DATE	BY	REV	REVISION

© 1999 Texas Department of Transportation

Brown & Root
HOUSTON, TEXAS

RODRIGUEZ & HUGGINS, INC.
CONSULTING ENGINEERS
11824 JOLLYVILLE ROAD SUITE 402
AUSTIN, TEXAS 78759
PHONE: 512 335 1754 FAX: 512 335 1799

IH 35
TRAFFIC CONTROL PLAN PHASE I

0 25 50 100

SHEET 2 OF 9

FED RD DIV NO	STATE PROJECT NO		SHEET NO
6			114
STATE	STATE DIST NO		COUNTY
TEXAS	22		WEBB
CONT	SECT	JOB	HIGHWAY NO
0018	05	057	LOOP 20

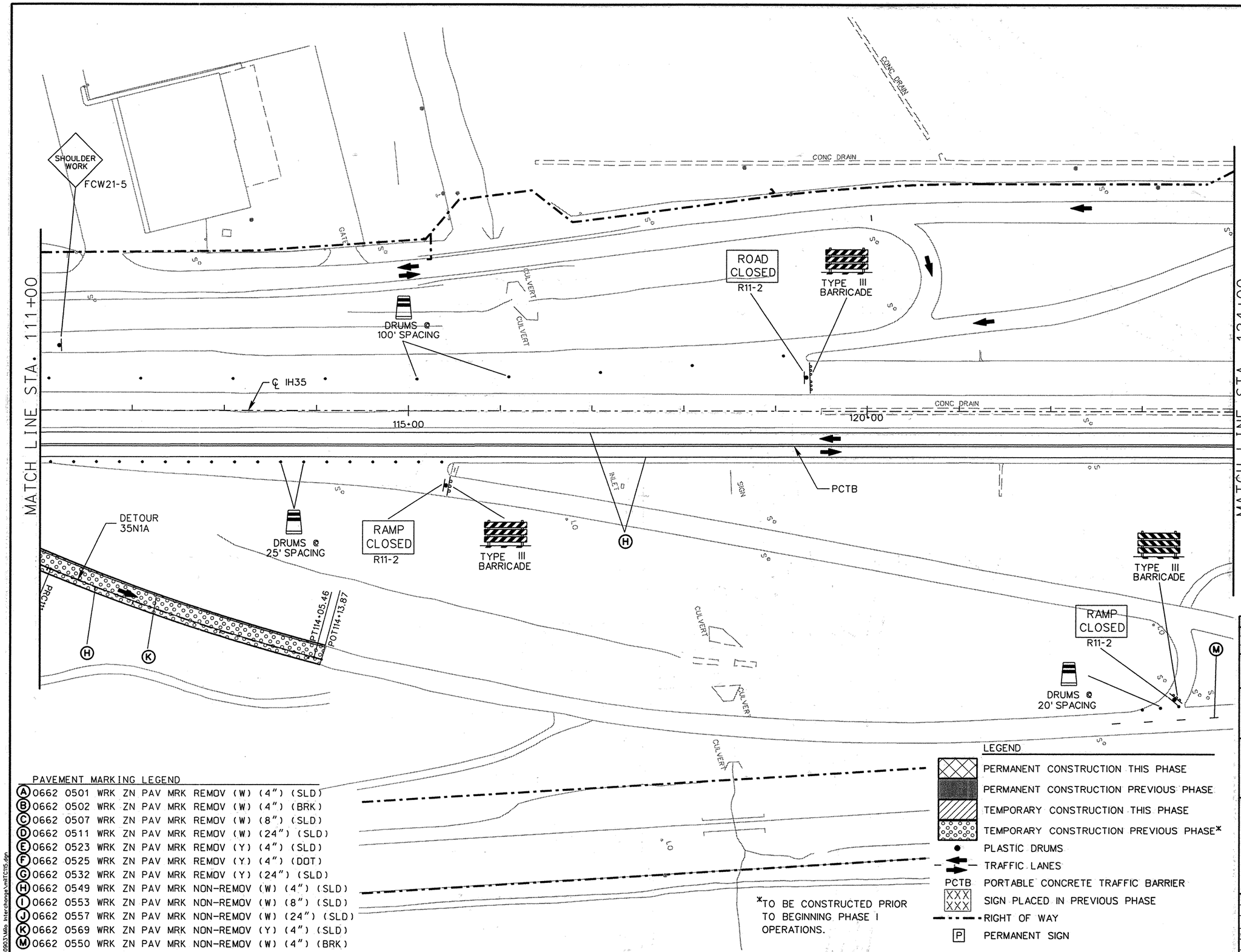

PAVEMENT MARKING LEGEND

(A) 0662 0501 WRK ZN PAV MRK REMOV (W) (4") (SLD)
(B) 0662 0502 WRK ZN PAV MRK REMOV (W) (4") (BRK)
(C) 0662 0507 WRK ZN PAV MRK REMOV (W) (8") (SLD)
(D) 0662 0511 WRK ZN PAV MRK REMOV (W) (24") (SLD)
(E) 0662 0523 WRK ZN PAV MRK REMOV (Y) (4") (SLD)
(F) 0662 0525 WRK ZN PAV MRK REMOV (Y) (4") (DOT)
(G) 0662 0532 WRK ZN PAV MRK REMOV (Y) (24") (SLD)
(H) 0662 0549 WRK ZN PAV MRK NON-REMOV (W) (4") (SLD)
(I) 0662 0553 WRK ZN PAV MRK NON-REMOV (W) (8") (SLD)
(J) 0662 0557 WRK ZN PAV MRK NON-REMOV (W) (24") (SLD)
(K) 0662 0569 WRK ZN PAV MRK NON-REMOV (Y) (4") (SLD)
(M) 0662 0550 WRK ZN PAV MRK NON-REMOV (W) (4") (BRK)

*TO BE CONSTRUCTED PRIOR TO BEGINNING PHASE I OPERATIONS.

LEGEND

- PERMANENT CONSTRUCTION THIS PHASE
- PERMANENT CONSTRUCTION PREVIOUS PHASE
- TEMPORARY CONSTRUCTION THIS PHASE
- TEMPORARY CONSTRUCTION PREVIOUS PHASE*
- PLASTIC DRUMS
- TRAFFIC LANES
- PCTB — PORTABLE CONCRETE TRAFFIC BARRIER
- XXX — SIGN PLACED IN PREVIOUS PHASE
- RIGHT OF WAY
- P — PERMANENT SIGN

STATE OF TEXAS
JEFFERY T. SEILER
77187
REGISTERED PROFESSIONAL ENGINEER
5-13-99

DATE	BY	REV	REVISION

© 1999 Texas Department of Transportation

Brown & Root
HOUSTON, TEXAS

RODRIGUEZ & HUGGINS, INC.
CONSULTING ENGINEERS
11824 JOLLYVILLE ROAD SUITE 402
AUSTIN, TEXAS 78759
PHONE: 512 335 1754 FAX: 512 335 1799

IH 35
TRAFFIC CONTROL PLAN PHASE I

0 25 50 100

SHEET 3 OF 9

FED RD DIV NO	STATE PROJECT NO		SHEET NO
6			115
STATE	STATE DIST NO		COUNTY
TEXAS	22		WEBB
CONT	SECT	JOB	HIGHWAY NO
0018	05	057	LOOP 20

80903\Milo. Interchange\mitTC115.dgn

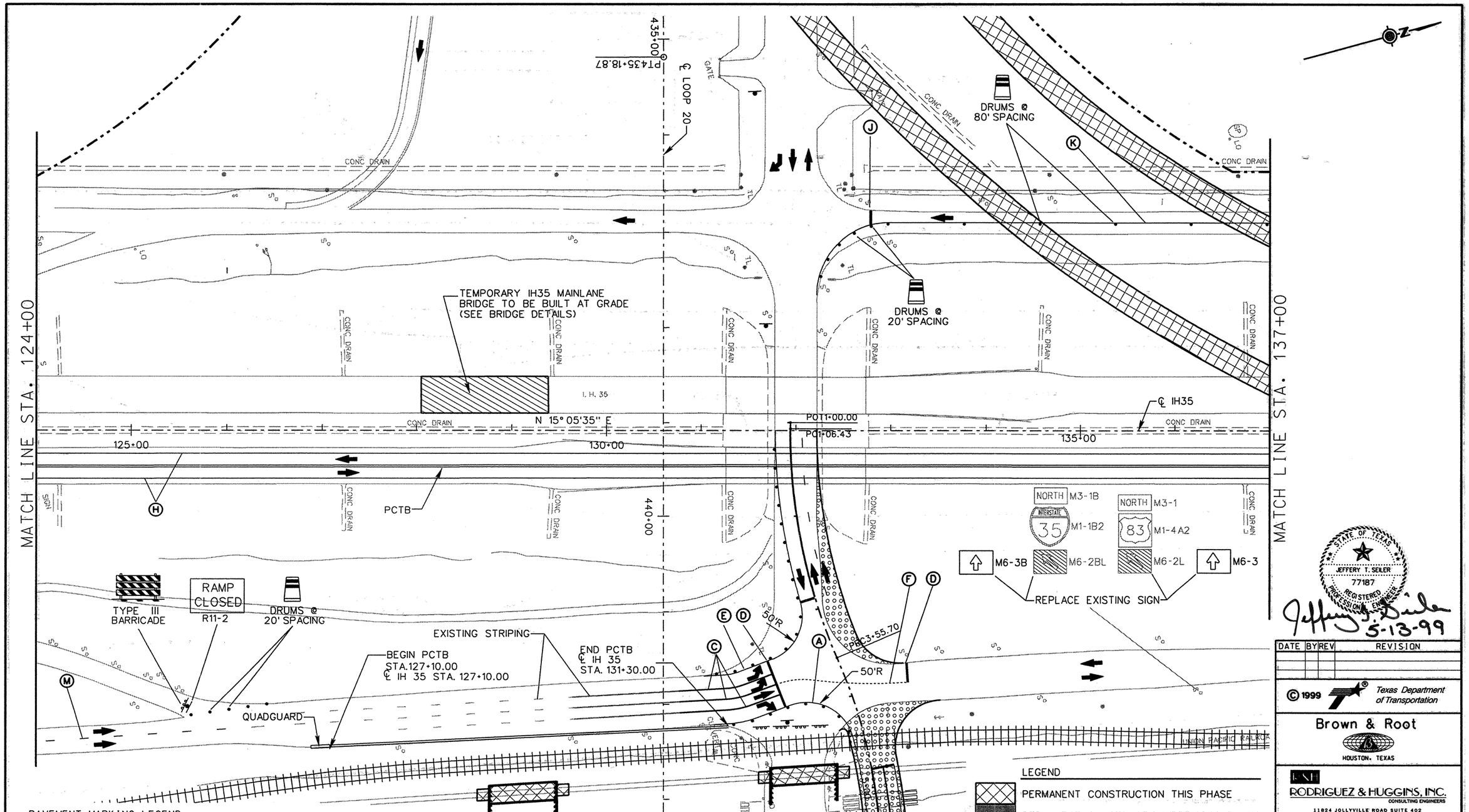

PAVEMENT MARKING LEGEND

A	0662 0501 WRK ZN PAV MRK REMOV (W) (4") (SLD)
B	0662 0502 WRK ZN PAV MRK REMOV (W) (4") (BRK)
C	0662 0507 WRK ZN PAV MRK REMOV (W) (8") (SLD)
D	0662 0511 WRK ZN PAV MRK REMOV (W) (24") (SLD)
E	0662 0523 WRK ZN PAV MRK REMOV (Y) (4") (SLD)
F	0662 0525 WRK ZN PAV MRK REMOV (Y) (4") (DOT)
G	0662 0532 WRK ZN PAV MRK REMOV (Y) (24") (SLD)
H	0662 0549 WRK ZN PAV MRK NON-REMOV (W) (4") (SLD)
I	0662 0553 WRK ZN PAV MRK NON-REMOV (W) (8") (SLD)
J	0662 0557 WRK ZN PAV MRK NON-REMOV (W) (24") (SLD)
K	0662 0569 WRK ZN PAV MRK NON-REMOV (Y) (4") (SLD)
M	0662 0550 WRK ZN PAV MRK NON-REMOV (W) (4") (BRK)

NOTE: SEE RAILROAD EXHIBITS FOR ADDITIONAL PAVEMENT MARKINGS, SIGNING AND WARNING DEVICES.

* TO BE CONSTRUCTED PRIOR TO BEGINNING PHASE I OPERATIONS.

LEGEND

- PERMANENT CONSTRUCTION THIS PHASE
- PERMANENT CONSTRUCTION PREVIOUS PHASE
- TEMPORARY CONSTRUCTION THIS PHASE
- TEMPORARY CONSTRUCTION PREVIOUS PHASE *
- PLASTIC DRUMS
- TRAFFIC LANES
- PCTB PORTABLE CONCRETE TRAFFIC BARRIER
- SIGN PLACED IN PREVIOUS PHASE
- RIGHT OF WAY
- P PERMANENT SIGN

STATE OF TEXAS
JEFFERY T. SEILER
77187
REGISTERED PROFESSIONAL ENGINEER

Jeffery T. Seiler
5-13-99

DATE	BY	REV	REVISION

© 1999 Texas Department of Transportation

Brown & Root
HOUSTON, TEXAS

RODRIGUEZ & HUGGINS, INC.
CONSULTING ENGINEERS
11824 JOLLYVILLE ROAD SUITE 402
AUSTIN, TEXAS 78759
PHONE: 512 335 1754 FAX: 512 335 1799

IH 35
TRAFFIC CONTROL PLAN PHASE I

0 25 50 100

SHEET 4 OF 9

FED RD DIV NO	STATE PROJECT NO		SHEET NO
6			116
STATE	STATE DIST NO		COUNTY
TEXAS	22		WEBB
CONT	SECT	JOB	HIGHWAY NO
0018	05	057	LOOP 20

80903\Milo Interchange\mlTC116.dgn

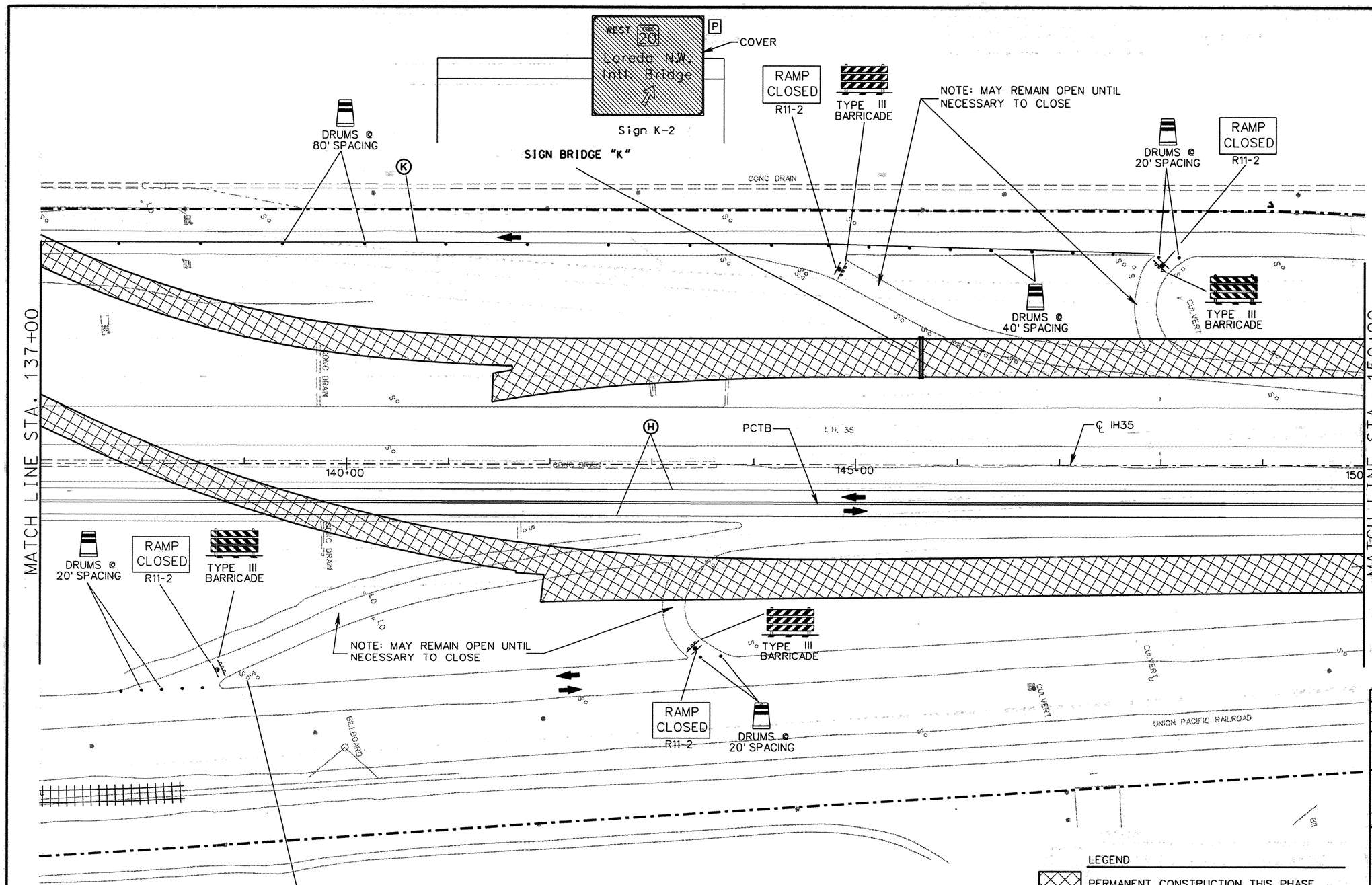

PAVEMENT MARKING LEGEND

A	0662 0501 WRK ZN PAV MRK REMOV (W) (4") (SLD)
B	0662 0502 WRK ZN PAV MRK REMOV (W) (4") (BRK)
C	0662 0507 WRK ZN PAV MRK REMOV (W) (8") (SLD)
D	0662 0511 WRK ZN PAV MRK REMOV (W) (24") (SLD)
E	0662 0523 WRK ZN PAV MRK REMOV (Y) (4") (SLD)
F	0662 0525 WRK ZN PAV MRK REMOV (Y) (4") (DOT)
G	0662 0532 WRK ZN PAV MRK REMOV (Y) (24") (SLD)
H	0662 0549 WRK ZN PAV MRK NON-REMOV (W) (4") (SLD)
I	0662 0553 WRK ZN PAV MRK NON-REMOV (W) (8") (SLD)
J	0662 0557 WRK ZN PAV MRK NON-REMOV (W) (24") (SLD)
K	0662 0569 WRK ZN PAV MRK NON-REMOV (Y) (4") (SLD)

LEGEND

- PERMANENT CONSTRUCTION THIS PHASE
- PERMANENT CONSTRUCTION PREVIOUS PHASE
- TEMPORARY CONSTRUCTION THIS PHASE
- TEMPORARY CONSTRUCTION PREVIOUS PHASE
- PLASTIC DRUMS
- TRAFFIC LANES
- PCTB PORTABLE CONCRETE TRAFFIC BARRIER
- XXX SIGN PLACED IN PREVIOUS PHASE
- RIGHT OF WAY
- P PERMANENT SIGN

STATE OF TEXAS
JEFFERY T. SEILER
77187
REGISTERED PROFESSIONAL ENGINEER

Jeffery T. Seiler
5-12-99

DATE	BY	REV	REVISION

© 1999 Texas Department of Transportation

Brown & Root
HOUSTON, TEXAS

RODRIGUEZ & HUGGINS, INC.
CONSULTING ENGINEERS
11824 JOLLYVILLE ROAD SUITE 402
AUSTIN, TEXAS 78759
PHONE: 512 335 1754 FAX: 512 335 1799

IH 35
TRAFFIC CONTROL PLAN
PHASE I

0 25 50 100

SHEET 5 OF 9

FED RD DIV NO	STATE PROJECT NO		SHEET NO
6			117
STATE	STATE DIST NO		COUNTY
TEXAS	22		WEBB
CONT	SECT	JOB	HIGHWAY NO
0018	05	057	LOOP 20

80903\Milo Interchange\mi\TC117.dgn

NOTE: CONSTRUCT PROPOSED IH 35 WEST FRONTAGE ROAD IN HALF WIDTHS UTILIZING APPROPRIATE TRAFFIC CONTROL STANDARDS FOR LANE SWITCHES.

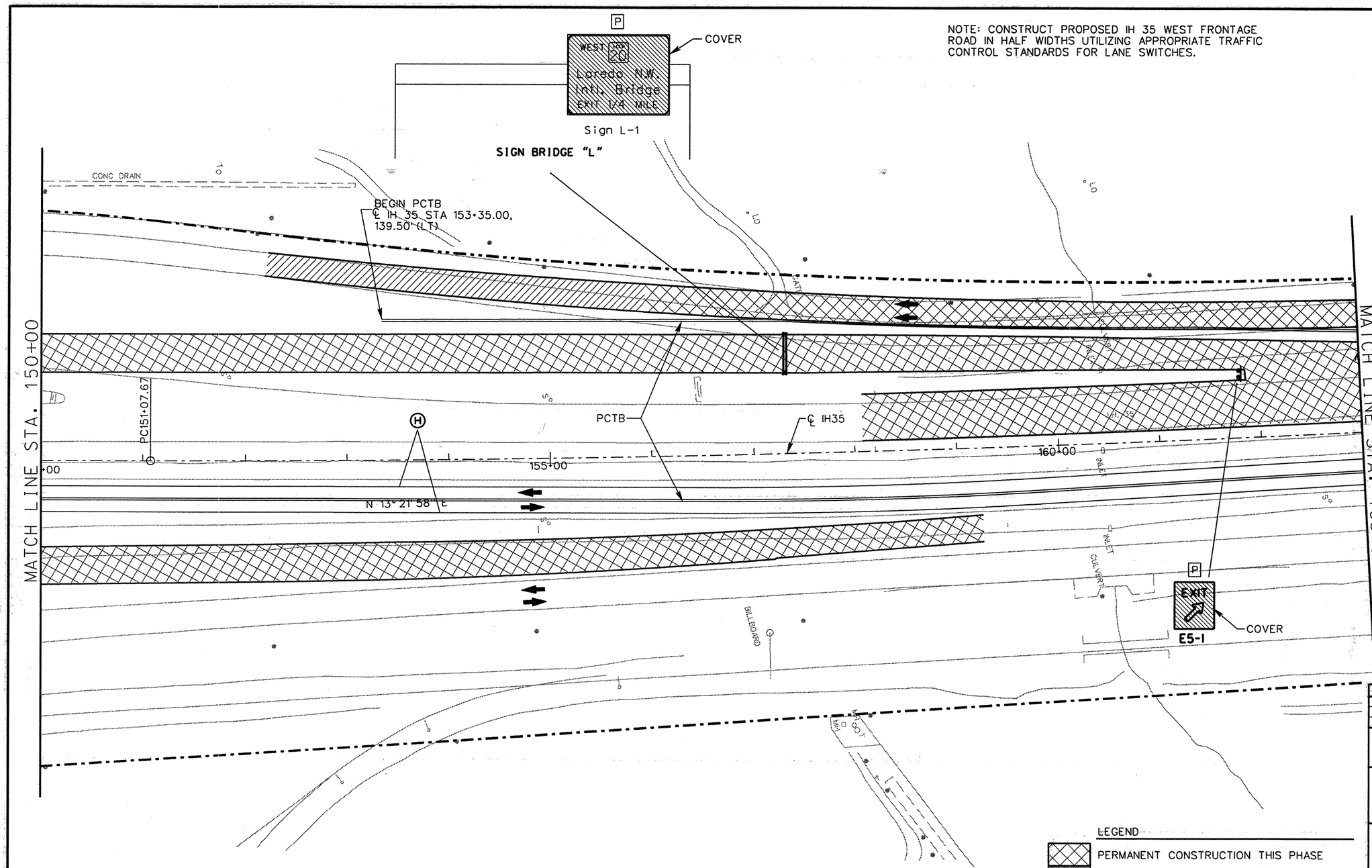

PAVEMENT MARKING LEGEND

- (A) 0662 0501 WRK ZN PAV MRK REMOV (W) (4") (SLD)
- (B) 0662 0502 WRK ZN PAV MRK REMOV (W) (4") (BRK)
- (C) 0662 0507 WRK ZN PAV MRK REMOV (W) (8") (SLD)
- (D) 0662 0511 WRK ZN PAV MRK REMOV (W) (24") (SLD)
- (E) 0662 0523 WRK ZN PAV MRK REMOV (Y) (4") (SLD)
- (F) 0662 0525 WRK ZN PAV MRK REMOV (Y) (4") (DOT)
- (G) 0662 0532 WRK ZN PAV MRK REMOV (Y) (24") (SLD)
- (H) 0662 0549 WRK ZN PAV MRK NON-REMOV (W) (4") (SLD)
- (I) 0662 0553 WRK ZN PAV MRK NON-REMOV (W) (8") (SLD)
- (J) 0662 0557 WRK ZN PAV MRK NON-REMOV (W) (24") (SLD)
- (K) 0662 0569 WRK ZN PAV MRK NON-REMOV (Y) (4") (SLD)

LEGEND

- PERMANENT CONSTRUCTION THIS PHASE
- PERMANENT CONSTRUCTION PREVIOUS PHASE
- TEMPORARY CONSTRUCTION THIS PHASE
- TEMPORARY CONSTRUCTION PREVIOUS PHASE
- PLASTIC DRUMS
- TRAFFIC LANES
- PCTB PORTABLE CONCRETE TRAFFIC BARRIER
- XXX XXX SIGN PLACED IN PREVIOUS PHASE
- RIGHT OF WAY
- P PERMANENT SIGN

STATE OF TEXAS
JEFFERY T. SEILER
77187
REGISTERED PROFESSIONAL ENGINEER

Jeffery T. Seiler
5-12-99

DATE	BY	REV	REVISION

© 1999 Texas Department of Transportation

Brown & Root
HOUSTON, TEXAS

RSH
RODRIGUEZ & HUGGINS, INC.
CONSULTING ENGINEERS
11824 JOLLYVILLE ROAD SUITE 402
AUSTIN, TEXAS 78759
PHONE: 512 335 1754 FAX: 512 335 1799

IH 35
TRAFFIC CONTROL PLAN
PHASE I

0 25 50 100

SHEET 6 OF 9

FED RD DIV NO	STATE PROJECT NO		SHEET NO
6			118
STATE	STATE DIST NO		COUNTY
TEXAS	22		WEBB
CONT	SECT	JOB	HIGHWAY NO
0018	05	057	LOOP 20

80903\Mlo Interchange\mlTC118.dgn

NOTE: CONSTRUCT PROPOSED IH 35 WEST FRONTAGE ROAD IN HALF WIDTHS UTILIZING APPROPRIATE TRAFFIC CONTROL STANDARDS FOR LANE SWITCHES.

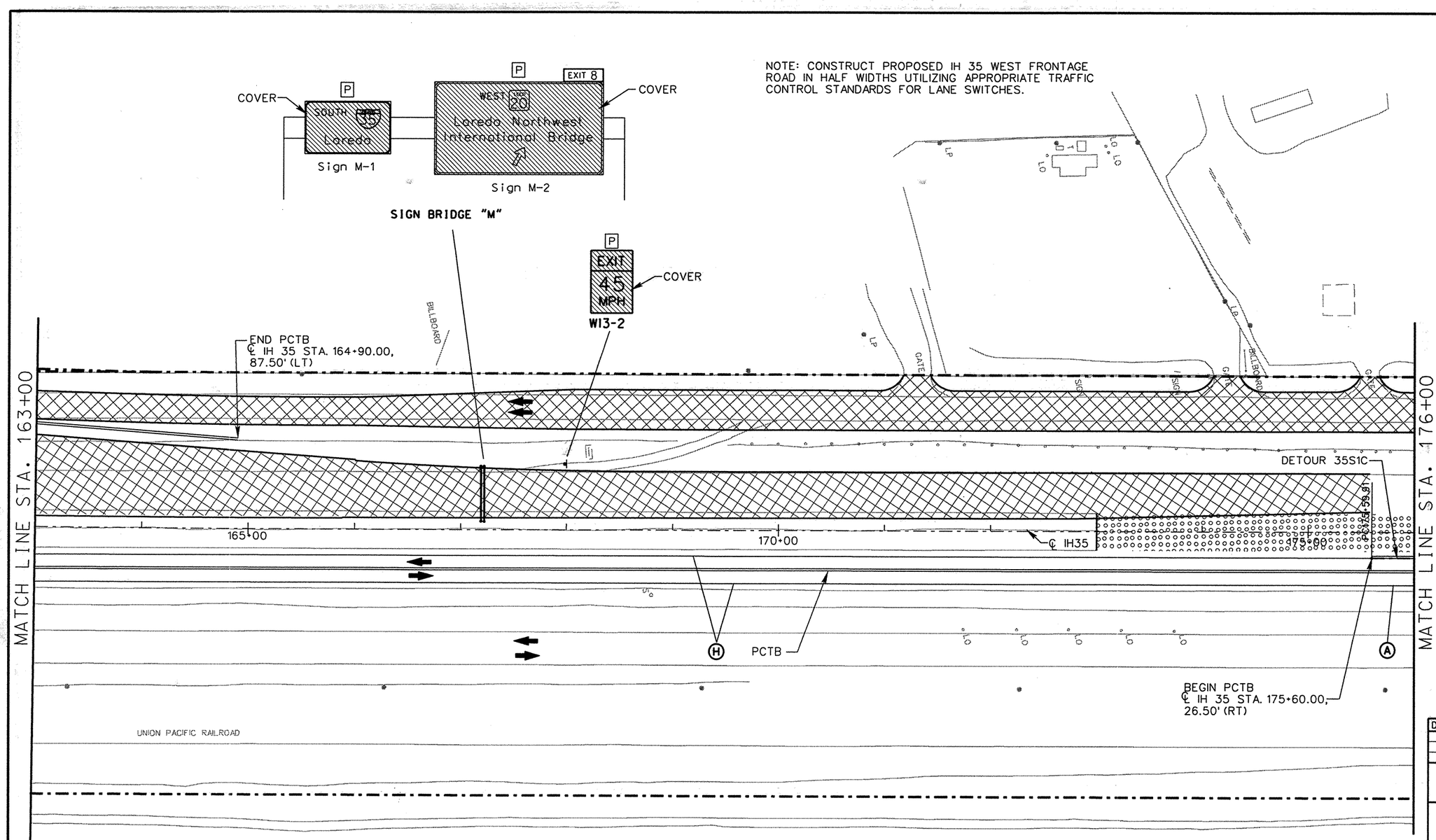

PAVEMENT MARKING LEGEND

(A) 0662 0501 WRK ZN PAV MRK REMOV (W) (4") (SLD)
(B) 0662 0502 WRK ZN PAV MRK REMOV (W) (4") (BRK)
(C) 0662 0507 WRK ZN PAV MRK REMOV (W) (8") (SLD)
(D) 0662 0511 WRK ZN PAV MRK REMOV (W) (24") (SLD)
(E) 0662 0523 WRK ZN PAV MRK REMOV (Y) (4") (SLD)
(F) 0662 0525 WRK ZN PAV MRK REMOV (Y) (4") (DOT)
(G) 0662 0532 WRK ZN PAV MRK REMOV (Y) (24") (SLD)
(H) 0662 0549 WRK ZN PAV MRK NON-REMOV (W) (4") (SLD)
(I) 0662 0553 WRK ZN PAV MRK NON-REMOV (W) (8") (SLD)
(J) 0662 0557 WRK ZN PAV MRK NON-REMOV (W) (24") (SLD)
(K) 0662 0569 WRK ZN PAV MRK NON-REMOV (Y) (4") (SLD)

LEGEND

- PERMANENT CONSTRUCTION THIS PHASE
- PERMANENT CONSTRUCTION PREVIOUS PHASE
- TEMPORARY CONSTRUCTION THIS PHASE
- TEMPORARY CONSTRUCTION PREVIOUS PHASE
- PLASTIC DRUMS
- TRAFFIC LANES
- PCTB PORTABLE CONCRETE TRAFFIC BARRIER
- XXX SIGN PLACED IN PREVIOUS PHASE
- RIGHT OF WAY
- P PERMANENT SIGN

STATE OF TEXAS
JEFFERY T. SEILER
77187
REGISTERED PROFESSIONAL ENGINEER

Jeffery T. Seiler
5-12-99

DATE	BY	REV	REVISION

© 1999 Texas Department of Transportation

Brown & Root
HOUSTON, TEXAS

RODRIGUEZ & HUGGINS, INC.
CONSULTING ENGINEERS
11824 JOLLYVILLE ROAD SUITE 402
AUSTIN, TEXAS 78759
PHONE: 512 335 1754 FAX: 512 335 1799

IH 35
TRAFFIC CONTROL PLAN
PHASE I

0 25 50 100

SHEET 7 OF 9

FED RD DIV NO	STATE PROJECT NO		SHEET NO
6			119
STATE	STATE DIST NO		COUNTY
TEXAS	22		WEBB
CONT	SECT	JOB	HIGHWAY NO
0018	05	057	LOOP 20

80903\Milo Interchange\milTC119.dgn

NOTE: CONSTRUCT PROPOSED IH 35 WEST FRONTAGE ROAD IN HALF WIDTHS UTILIZING APPROPRIATE TRAFFIC CONTROL STANDARDS FOR LANE SWITCHES.

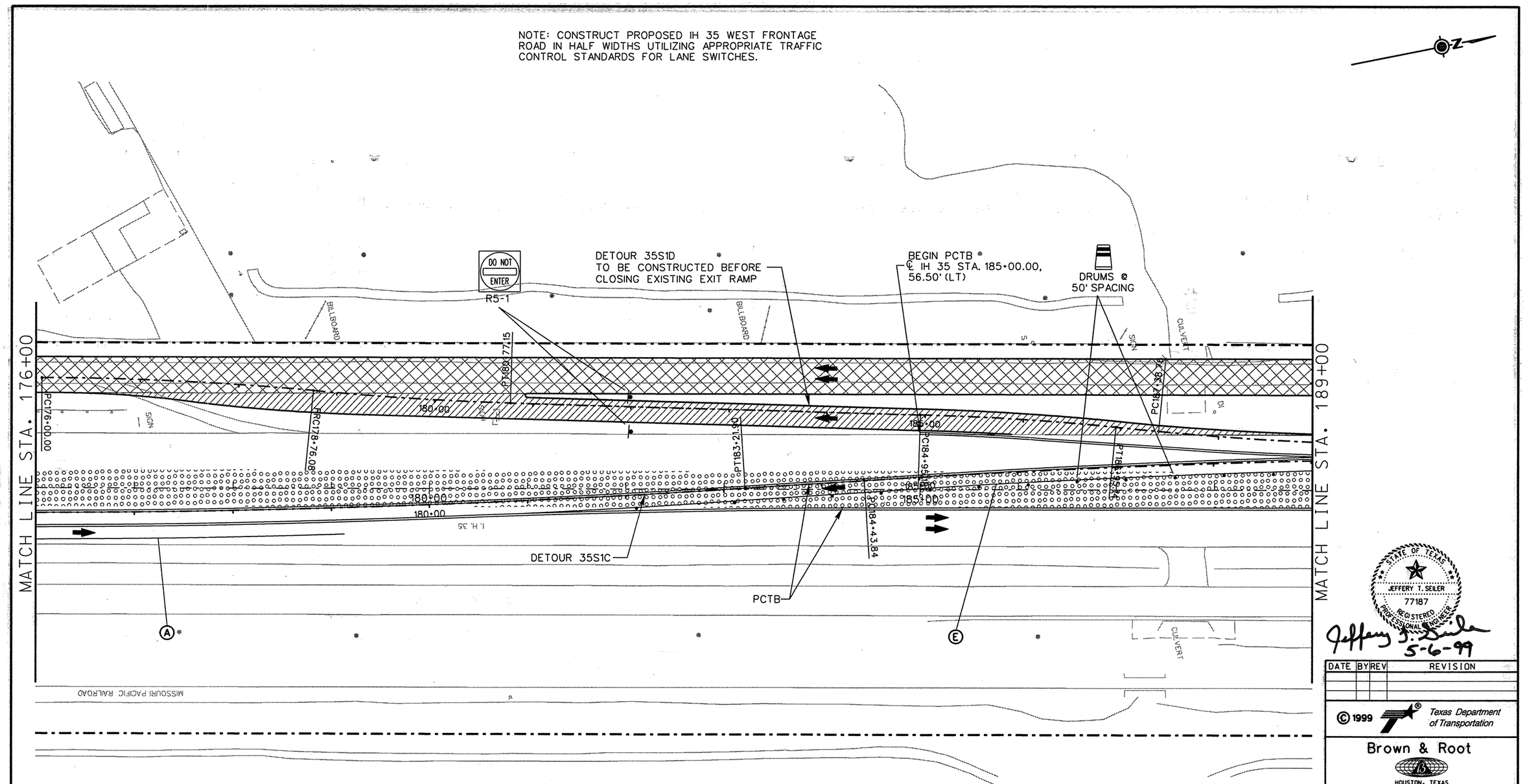

PAVEMENT MARKING LEGEND

(A) 0662 0501 WRK ZN PAV MRK REMOV (W) (4") (SLD)
(B) 0662 0502 WRK ZN PAV MRK REMOV (W) (4") (BRK)
(C) 0662 0507 WRK ZN PAV MRK REMOV (W) (8") (SLD)
(D) 0662 0511 WRK ZN PAV MRK REMOV (W) (24") (SLD)
(E) 0662 0523 WRK ZN PAV MRK REMOV (Y) (4") (SLD)
(F) 0662 0525 WRK ZN PAV MRK REMOV (Y) (4") (DOT)
(G) 0662 0532 WRK ZN PAV MRK REMOV (Y) (24") (SLD)
(H) 0662 0549 WRK ZN PAV MRK NON-REMOV (W) (4") (SLD)
(I) 0662 0553 WRK ZN PAV MRK NON-REMOV (W) (8") (SLD)
(J) 0662 0557 WRK ZN PAV MRK NON-REMOV (W) (24") (SLD)
(K) 0662 0569 WRK ZN PAV MRK NON-REMOV (Y) (4") (SLD)

LEGEND

- PERMANENT CONSTRUCTION THIS PHASE
- PERMANENT CONSTRUCTION PREVIOUS PHASE
- TEMPORARY CONSTRUCTION THIS PHASE
- TEMPORARY CONSTRUCTION PREVIOUS PHASE
- PLASTIC DRUMS
- TRAFFIC LANES
- PCTB — PORTABLE CONCRETE TRAFFIC BARRIER
- SIGN PLACED IN PREVIOUS PHASE
- RIGHT OF WAY
- P — PERMANENT SIGN

STATE OF TEXAS
JEFFERY T. SEILER
77187
REGISTERED PROFESSIONAL ENGINEER

Jeffery T. Seiler
5-6-99

DATE	BY	REV	REVISION

© 1999 Texas Department of Transportation

Brown & Root
HOUSTON, TEXAS

RODRIGUEZ & HUGGINS, INC.
CONSULTING ENGINEERS
11824 JOLLYVILLE ROAD SUITE 402
AUSTIN, TEXAS 78759
PHONE: 512 335 1704 FAX: 512 335 1799

IH 35
TRAFFIC CONTROL PLAN
PHASE 1

0 25 50 100

SHEET 8 OF 9

FED RD DIV NO	STATE PROJECT NO		SHEET NO
6			120
STATE	STATE DIST NO		COUNTY
TEXAS	22		WEBB
CONT	SECT	JOB	HIGHWAY NO
0018	05	057	LOOP 20

80903X Mlo_Interchange_mltTC120.dgn

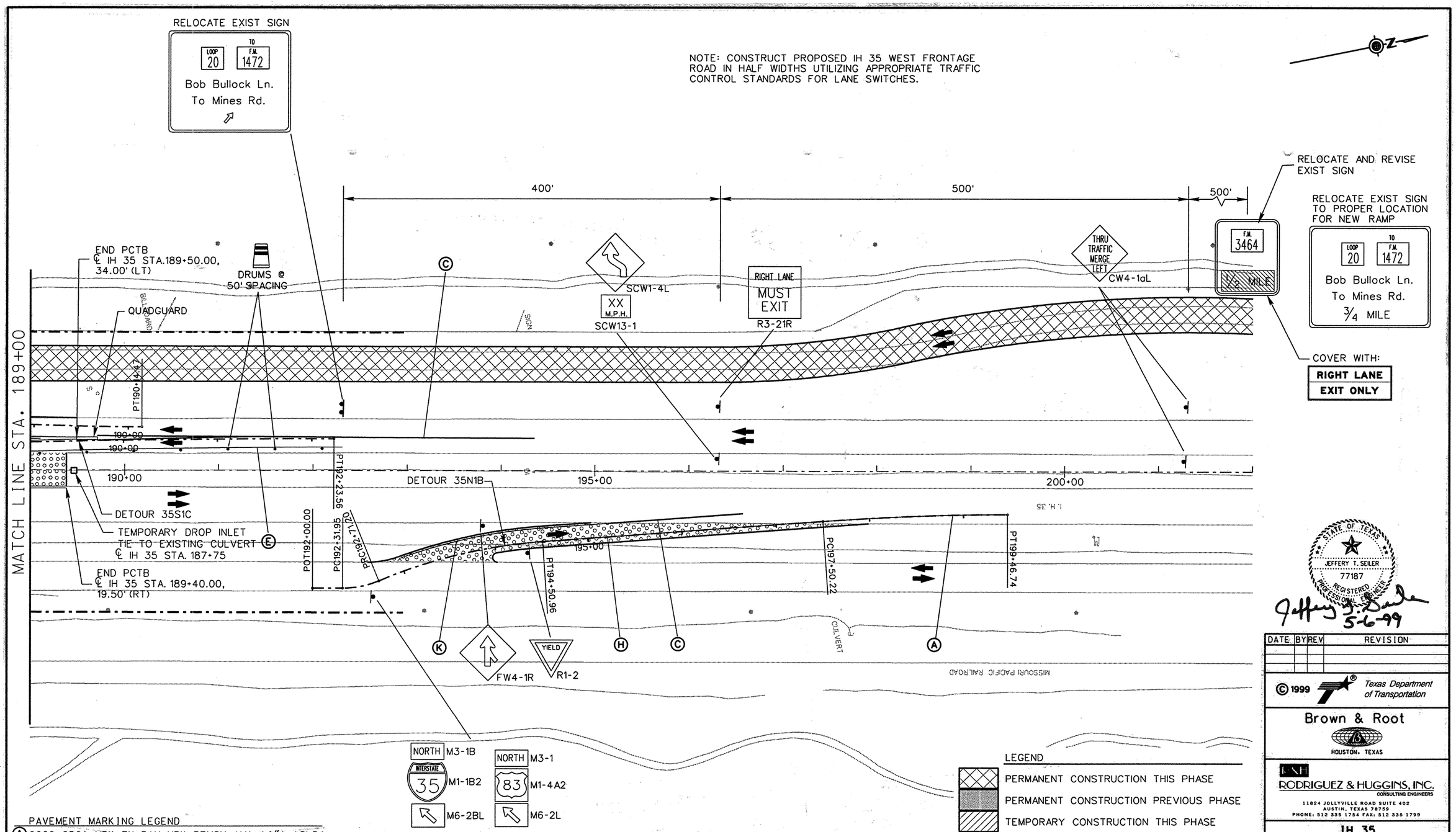

PAVEMENT MARKING LEGEND

A	0662 0501 WRK ZN PAV MRK REMOV (W) (4") (SLD)
B	0662 0502 WRK ZN PAV MRK REMOV (W) (4") (BRK)
C	0662 0507 WRK ZN PAV MRK REMOV (W) (8") (SLD)
D	0662 0511 WRK ZN PAV MRK REMOV (W) (24") (SLD)
E	0662 0523 WRK ZN PAV MRK REMOV (Y) (4") (SLD)
F	0662 0525 WRK ZN PAV MRK REMOV (Y) (4") (DOT)
G	0662 0532 WRK ZN PAV MRK REMOV (Y) (24") (SLD)
H	0662 0549 WRK ZN PAV MRK NON-REMOV (W) (4") (SLD)
I	0662 0553 WRK ZN PAV MRK NON-REMOV (W) (8") (SLD)
J	0662 0557 WRK ZN PAV MRK NON-REMOV (W) (24") (SLD)
K	0662 0569 WRK ZN PAV MRK NON-REMOV (Y) (4") (SLD)

LEGEND

- PERMANENT CONSTRUCTION THIS PHASE
- PERMANENT CONSTRUCTION PREVIOUS PHASE
- TEMPORARY CONSTRUCTION THIS PHASE
- TEMPORARY CONSTRUCTION PREVIOUS PHASE
- PLASTIC DRUMS
- TRAFFIC LANES
- PCTB PORTABLE CONCRETE TRAFFIC BARRIER
- XXX XXX SIGN PLACED IN PREVIOUS PHASE
- RIGHT OF WAY
- P PERMANENT SIGN

STATE OF TEXAS
JEFFERY T. SEILER
77187
REGISTERED PROFESSIONAL ENGINEER

Jeffery T. Seiler
5-6-99

DATE	BY	REV	REVISION

© 1999 Texas Department of Transportation

Brown & Root
HOUSTON, TEXAS

RODRIGUEZ & HUGGINS, INC.
CONSULTING ENGINEERS
11824 JOLLYVILLE ROAD SUITE 402
AUSTIN, TEXAS 78759
PHONE: 512 335 1754 FAX: 512 335 1799

IH 35
TRAFFIC CONTROL PLAN
PHASE I

0 25 50 100

SHEET 9 OF 9

FED RD DIV NO	STATE PROJECT NO		SHEET NO
6			121
STATE	STATE DIST NO		COUNTY
TEXAS	22		WEBB
CONT	SECT	JOB	HIGHWAY NO
0018	05	057	LOOP 20

80903\Mile Interchange\mITC121.dgn

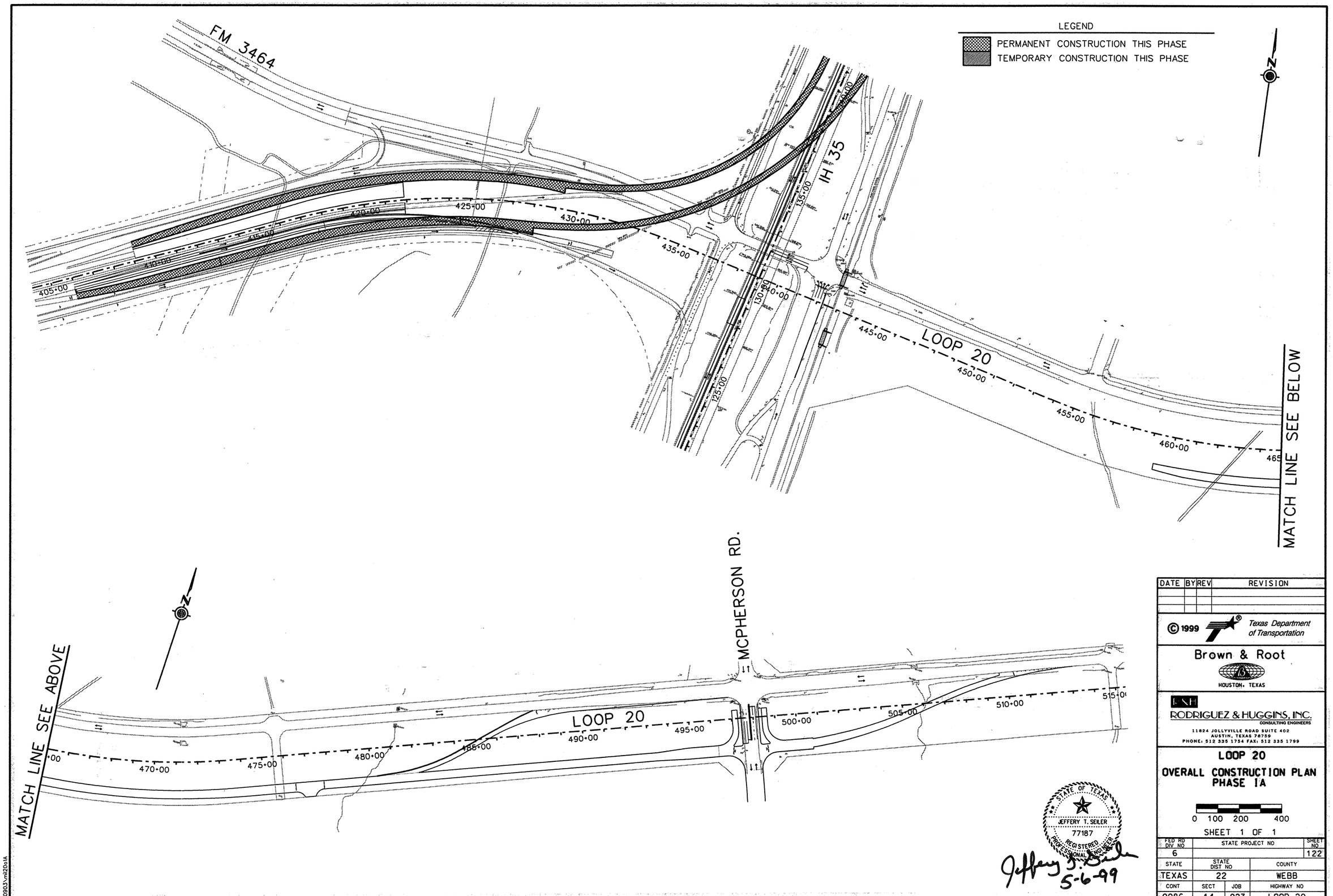

DATE	BY	REV	REVISION

© 1999 Texas Department of Transportation

Brown & Root
HOUSTON, TEXAS

RHI
RODRIGUEZ & HUGGINS, INC.
CONSULTING ENGINEERS
11824 JOLLYVILLE ROAD SUITE 402
AUSTIN, TEXAS 78759
PHONE: 512 335 1754 FAX: 512 335 1799

LOOP 20
OVERALL CONSTRUCTION PLAN PHASE IA

0 100 200 400

SHEET 1 OF 1

STATE OF TEXAS
JEFFERY T. SEILER
77187
REGISTERED PROFESSIONAL ENGINEER

Jeffery T. Seiler
5-6-99

FED RD DIV NO	STATE PROJECT NO		SHEET NO
6			122
STATE	STATE DIST NO		COUNTY
TEXAS	22		WEBB
CONT	SECT	JOB	HIGHWAY NO
0086	14	023	LOOP 20

80903\vmi20o1A

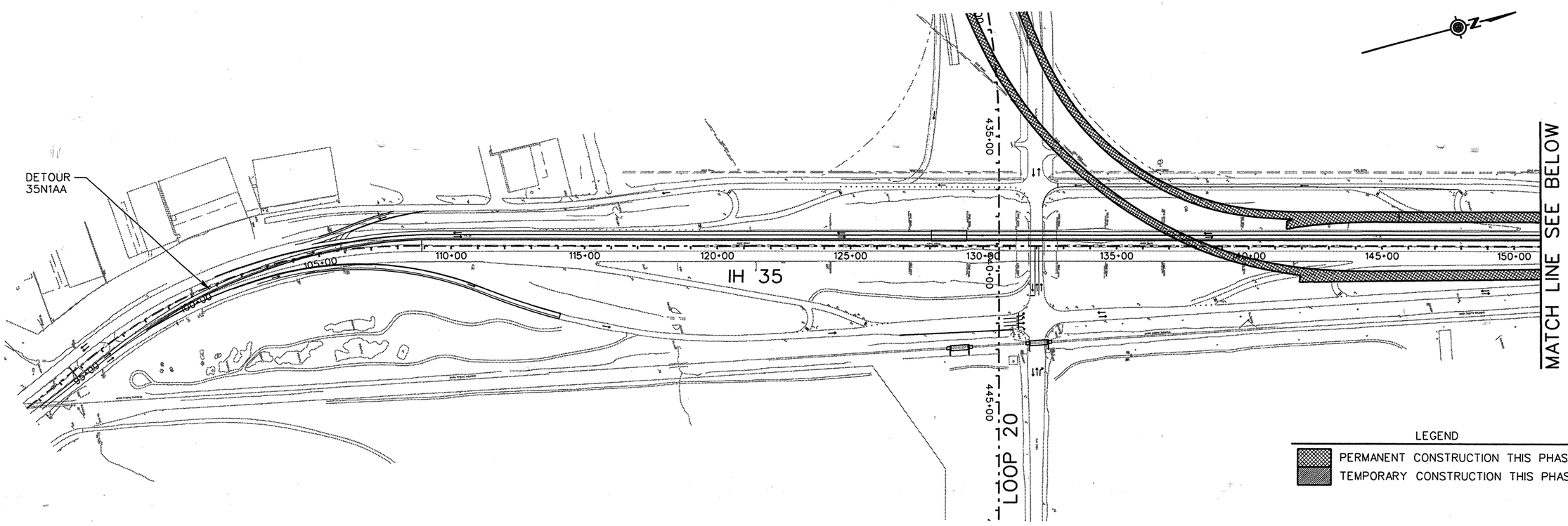

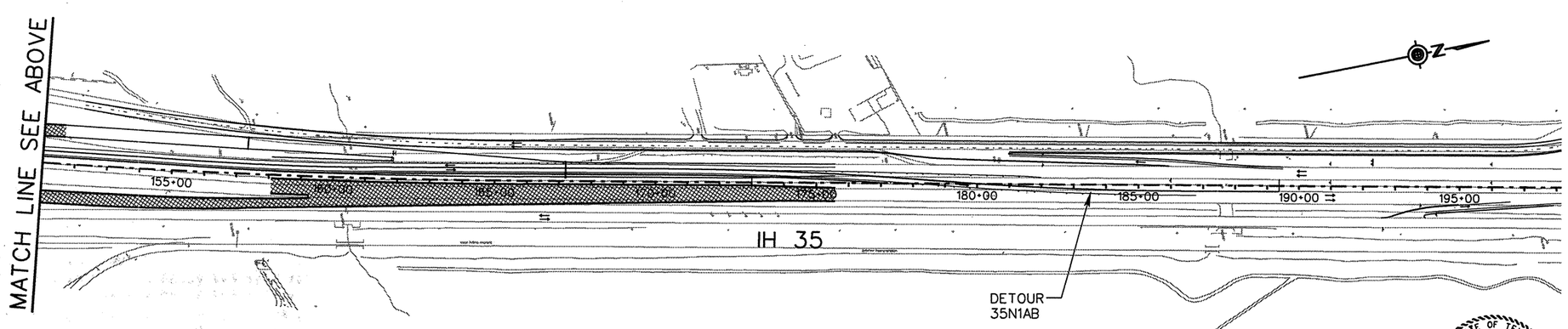

DATE	BY	REV	REVISION

© 1999 Texas Department of Transportation

Brown & Root
HOUSTON, TEXAS

RHI
RODRIGUEZ & HUGGINS, INC.
CONSULTING ENGINEERS
11824 JOLLYVILLE ROAD SUITE 402
AUSTIN, TEXAS 78759
PHONE: 512 335 1754 FAX: 512 335 1799

IH 35
OVERALL CONSTRUCTION PLAN PHASE 1A

0 100 200 400

SHEET 1 OF 1

STATE OF TEXAS
JEFFERY T. SEILER
77187
REGISTERED PROFESSIONAL ENGINEER

Jeffery T. Seiler
5-6-99

FED RD DIV NO	STATE PROJECT NO		SHEET NO
6			123
STATE	STATE DIST NO		COUNTY
TEXAS	22		WEBB
CONT	SECT	JOB	HIGHWAY NO
0018	06	131	LOOP 20

80903\rd35o1A

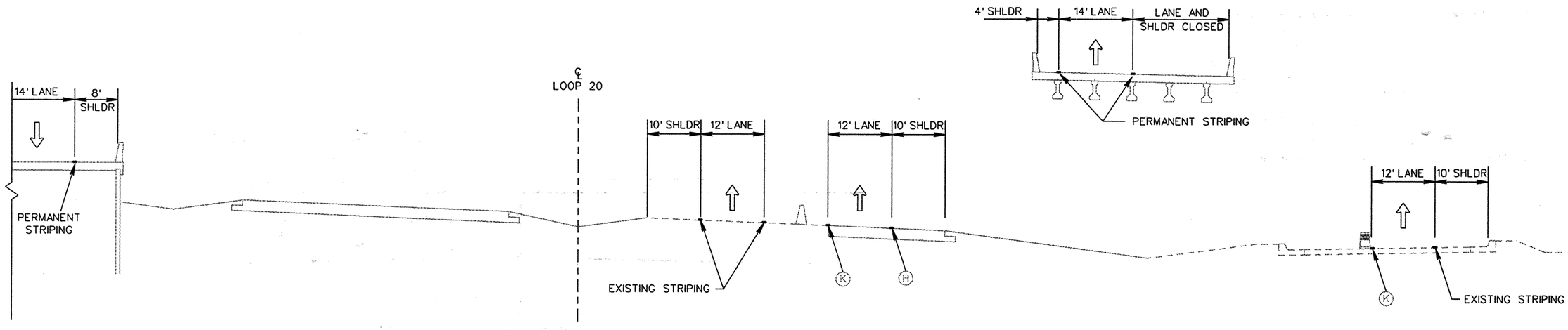

TYPICAL SECTION
STA 413+00 TO STA 421+90

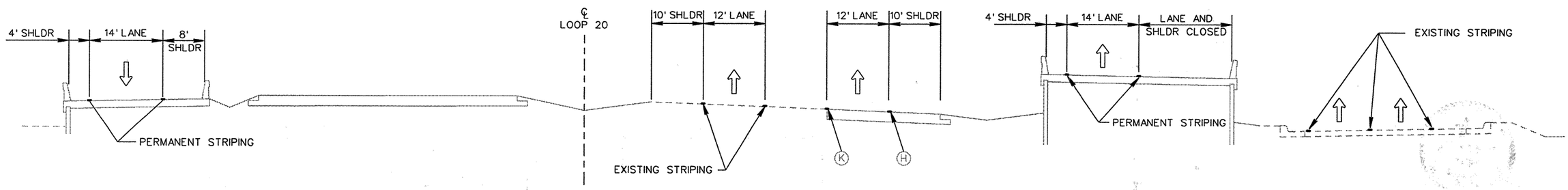

TYPICAL SECTION
STA 406+00 TO STA 413+00

PAVEMENT MARKING LEGEND

- (A) 0662 0501 WRK ZN PAV MRK REMOV (W) (4") (SLD)
- (B) 0662 0502 WRK ZN PAV MRK REMOV (W) (4") (BRK)
- (C) 0662 0507 WRK ZN PAV MRK REMOV (W) (8") (SLD)
- (D) 0662 0511 WRK ZN PAV MRK REMOV (W) (24") (SLD)
- (E) 0662 0523 WRK ZN PAV MRK REMOV (Y) (4") (SLD)
- (F) 0662 0525 WRK ZN PAV MRK REMOV (Y) (4") (DOT)
- (G) 0662 0532 WRK ZN PAV MRK REMOV (Y) (24") (SLD)
- (H) 0662 0549 WRK ZN PAV MRK NON-REMOV (W) (4") (SLD)
- (I) 0662 0553 WRK ZN PAV MRK NON-REMOV (W) (8") (SLD)
- (J) 0662 0557 WRK ZN PAV MRK NON-REMOV (W) (24") (SLD)
- (K) 0662 0569 WRK ZN PAV MRK NON-REMOV (Y) (4") (SLD)

NOTE: THE ABOVE TRAFFIC CONTROL SET-UPS MAY ALSO BE USED FOR PHASE II TRAFFIC CONTROL.

STATE OF TEXAS
JEFFERY T. SEILER
77187
REGISTERED PROFESSIONAL ENGINEER

Jeffery T. Seiler
5-6-99

DATE	BY	REV	REVISION

© 1999 Texas Department of Transportation

Brown & Root
HOUSTON, TEXAS

RODRIGUEZ & HUGGINS, INC.
CONSULTING ENGINEERS
11624 JOLLYVILLE ROAD SUITE 402
AUSTIN, TEXAS 78759
PHONE: 512 335 1754 FAX: 512 335 1799

LOOP 20

TCP TYPICAL SECTIONS
PHASE IA

0 10 20

SHEET 1 OF 1

FED RD DIV NO	STATE PROJECT NO		SHEET NO
6			124
STATE	STATE DIST NO		COUNTY
TEXAS	22		WEBB
CONT	SECT	JOB	HIGHWAY NO
0086	14	023	LOOP 20

PAVEMENT MARKING LEGEND

Ⓐ 0662 0501 WRK ZN PAV MRK REMOV (W) (4") (SLD)
Ⓑ 0662 0502 WRK ZN PAV MRK REMOV (W) (4") (BRK)
Ⓒ 0662 0507 WRK ZN PAV MRK REMOV (W) (8") (SLD)
Ⓓ 0662 0511 WRK ZN PAV MRK REMOV (W) (24") (SLD)
Ⓔ 0662 0523 WRK ZN PAV MRK REMOV (Y) (4") (SLD)
Ⓕ 0662 0525 WRK ZN PAV MRK REMOV (Y) (4") (DOT)
Ⓖ 0662 0532 WRK ZN PAV MRK REMOV (Y) (24") (SLD)
Ⓗ 0662 0549 WRK ZN PAV MRK NON-REMOV (W) (4") (SLD)
Ⓘ 0662 0553 WRK ZN PAV MRK NON-REMOV (W) (8") (SLD)
Ⓙ 0662 0557 WRK ZN PAV MRK NON-REMOV (W) (24") (SLD)
Ⓚ 0662 0569 WRK ZN PAV MRK NON-REMOV (Y) (4") (SLD)

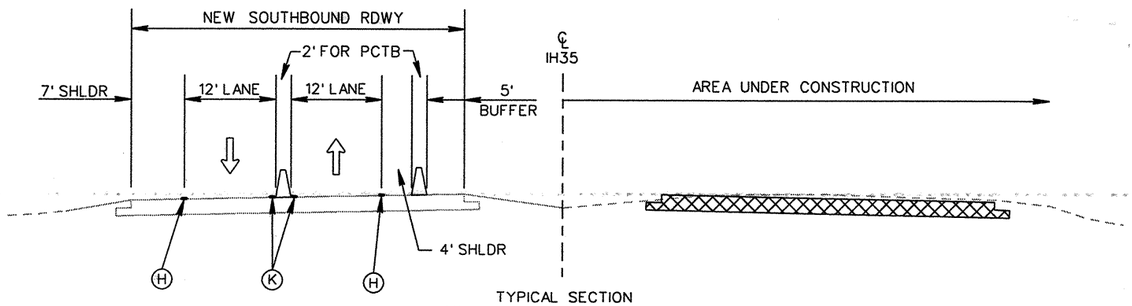

TYPICAL SECTION
STA 158+08.21 TO STA 175+30

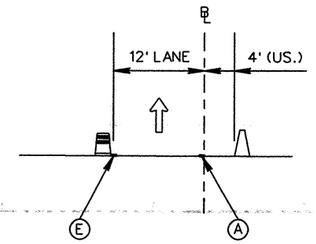

TYPICAL SECTION
DETOUR 35N1AA

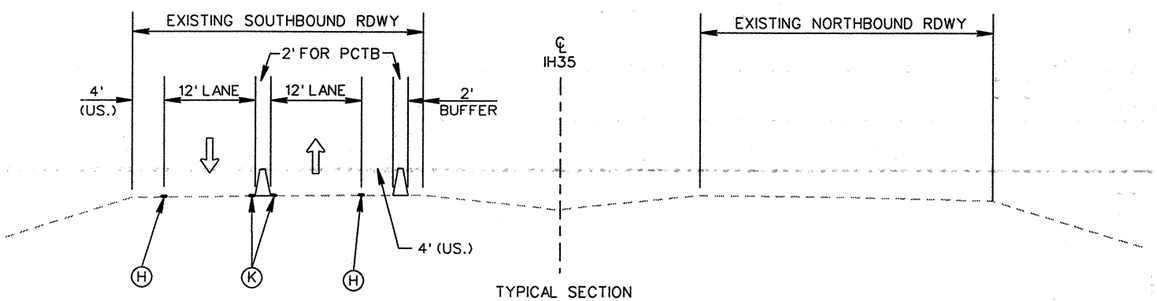

TYPICAL SECTION
STA 106+85 TO STA 158+00
(EXCEPT FOR TEMPORARY BRIDGE SECTION)

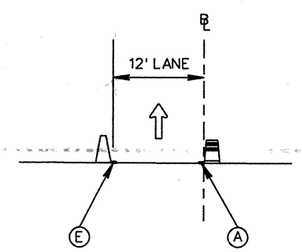

TYPICAL SECTION
DETOUR 35N1AB

NOTE: THE ABOVE TRAFFIC CONTROL SET-UP FOR STATION 158+08.21 TO STATION 175+30 MAY ALSO BE USED FOR PHASE II, PHASE IIA AND PHASE III TRAFFIC CONTROL.

STATE OF TEXAS
JEFFERY T. SEILER
77187
REGISTERED PROFESSIONAL ENGINEER

Jeffery T. Seiler
5-6-99

DATE	BY	REV	REVISION

© 1999 Texas Department of Transportation

Brown & Root
HOUSTON, TEXAS

RODRIGUEZ & HUGGINS, INC.
CONSULTING ENGINEERS
11824 JOLLYVILLE ROAD SUITE 402
AUSTIN, TEXAS 78759
PHONE: 512 335 1754 FAX: 512 335 1799

IH 35
TCP TYPICAL SECTIONS
PHASE IA

0 10 20

SHEET 1 OF 1

FED RD DIV NO	STATE PROJECT NO		SHEET NO
6			125
STATE	STATE DIST NO		COUNTY
TEXAS	22		WEBB
CONT	SECT	JOB	HIGHWAY NO
0018	05	057	LOOP 20

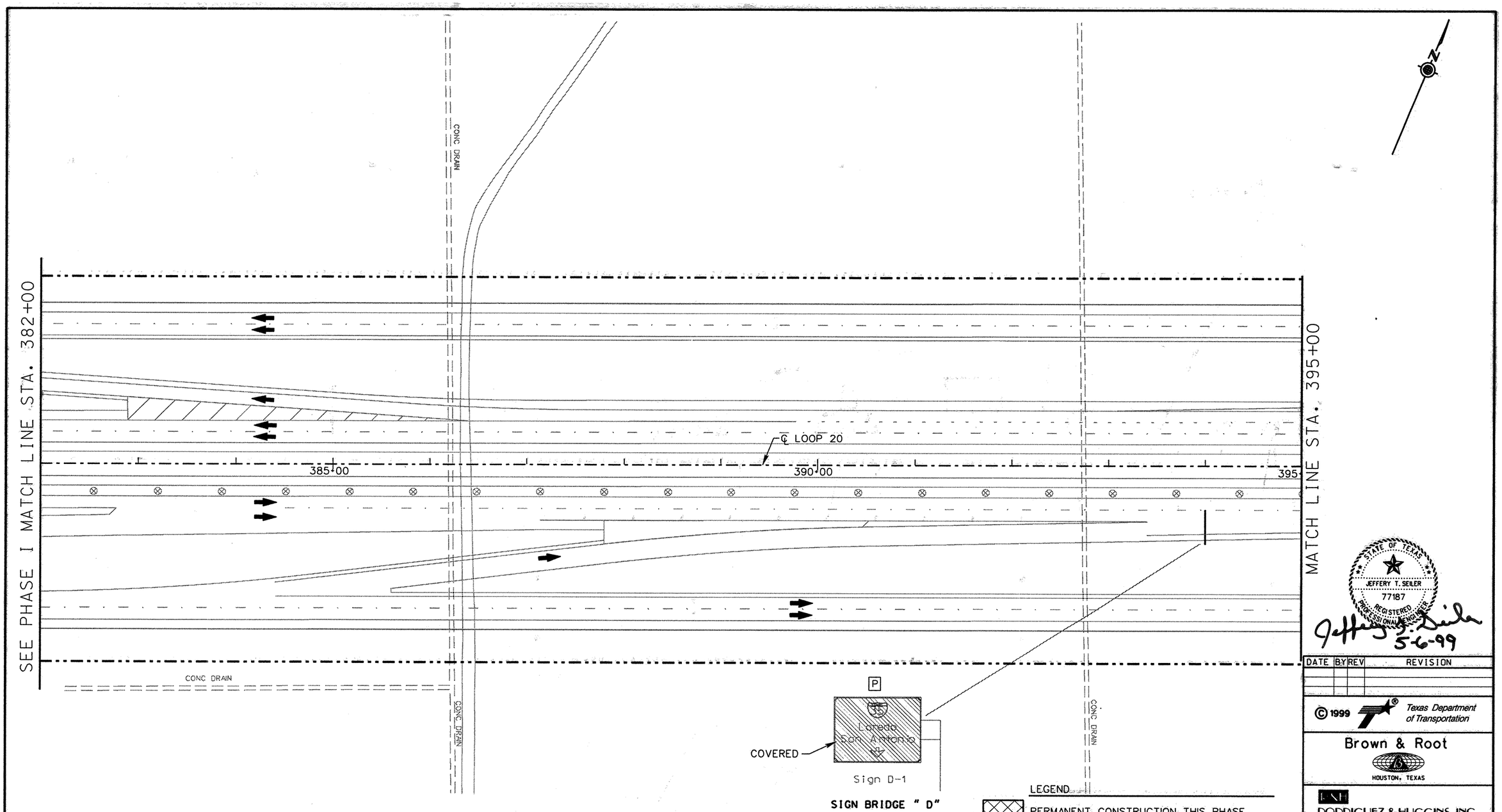

PAVEMENT MARKING LEGEND

(A) 0662 0501 WRK ZN PAV MRK REMOV (W) (4") (SLD)
(B) 0662 0502 WRK ZN PAV MRK REMOV (W) (4") (BRK)
(C) 0662 0507 WRK ZN PAV MRK REMOV (W) (8") (SLD)
(D) 0662 0511 WRK ZN PAV MRK REMOV (W) (24") (SLD)
(E) 0662 0523 WRK ZN PAV MRK REMOV (Y) (4") (SLD)
(F) 0662 0525 WRK ZN PAV MRK REMOV (Y) (4") (DOT)
(G) 0662 0532 WRK ZN PAV MRK REMOV (Y) (24") (SLD)
(H) 0662 0549 WRK ZN PAV MRK NON-REMOV (W) (4") (SLD)
(I) 0662 0553 WRK ZN PAV MRK NON-REMOV (W) (8") (SLD)
(J) 0662 0557 WRK ZN PAV MRK NON-REMOV (W) (24") (SLD)
(K) 0662 0569 WRK ZN PAV MRK NON-REMOV (Y) (4") (SLD)

LEGEND

- PERMANENT CONSTRUCTION THIS PHASE
- PERMANENT CONSTRUCTION PREVIOUS PHASE
- TEMPORARY CONSTRUCTION THIS PHASE
- TEMPORARY CONSTRUCTION PREVIOUS PHASE
- PLASTIC DRUMS
- TRAFFIC LANES
- PCTB PORTABLE CONCRETE TRAFFIC BARRIER
- XXX XXX SIGN PLACED IN PREVIOUS PHASE
- RIGHT OF WAY
- P PERMANENT SIGN

STATE OF TEXAS
JEFFERY T. SEILER
77187
REGISTERED PROFESSIONAL ENGINEER

Jeffery T. Seiler
5-6-99

DATE	BY	REV	REVISION

© 1999 Texas Department of Transportation

Brown & Root
HOUSTON, TEXAS

RODRIGUEZ & HUGGINS, INC.
CONSULTING ENGINEERS
11824 JOLLYVILLE ROAD SUITE 402
AUSTIN, TEXAS 78759
PHONE: 512 335 1754 FAX: 512 335 1799

LOOP 20

TRAFFIC CONTROL PLAN
PHASE IA

0 25 50 100

SHEET 1 OF 5

FED RD DIV NO	STATE PROJECT NO		SHEET NO
6			126
STATE	STATE DIST NO		COUNTY
TEXAS	22		WEBB
CONT	SECT	JOB	HIGHWAY NO
0086	14	023	LOOP 20

80903\Mio Interchange\mitC203.dgn

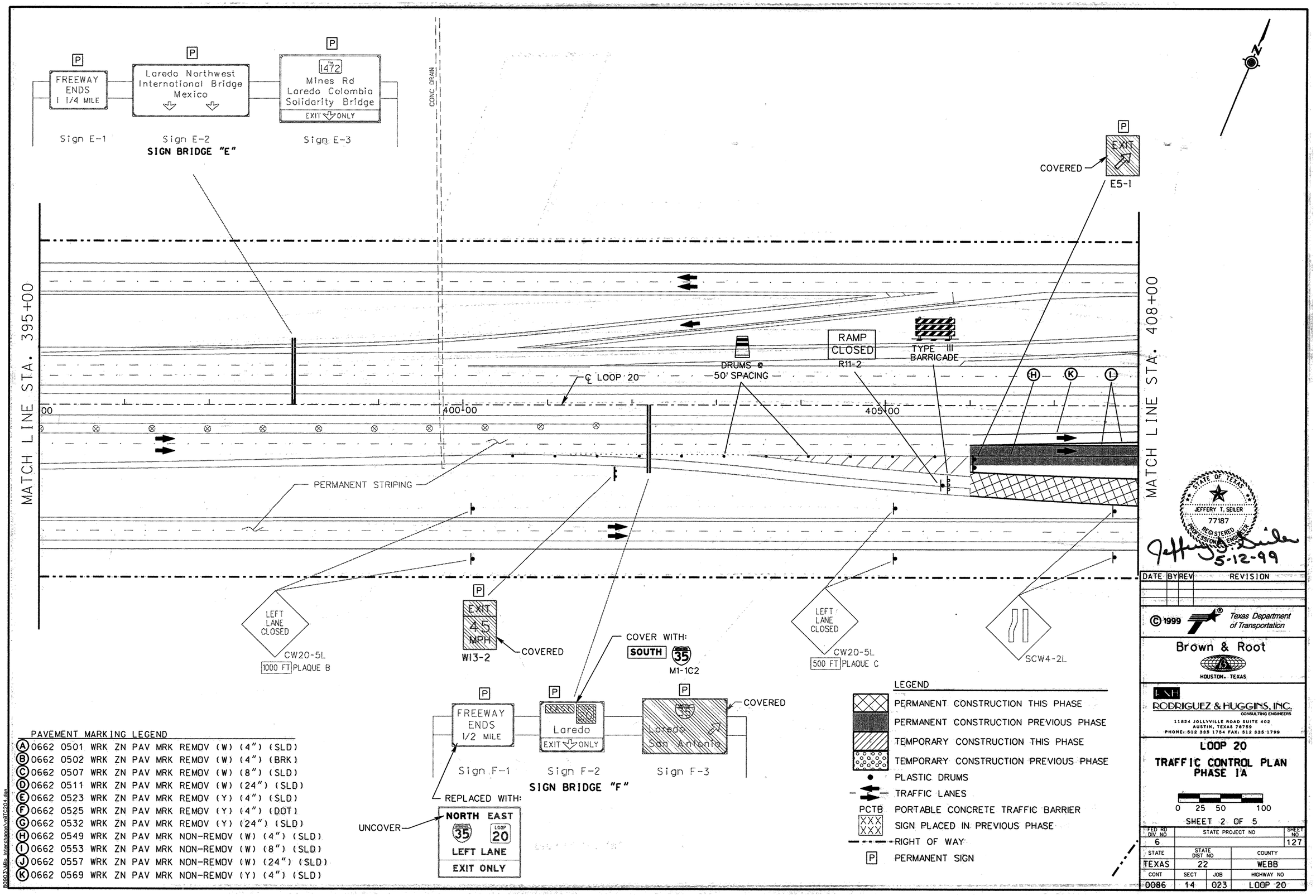

PAVEMENT MARKING LEGEND

(A) 0662 0501 WRK ZN PAV MRK REMOV (W) (4") (SLD)
(B) 0662 0502 WRK ZN PAV MRK REMOV (W) (4") (BRK)
(C) 0662 0507 WRK ZN PAV MRK REMOV (W) (8") (SLD)
(D) 0662 0511 WRK ZN PAV MRK REMOV (W) (24") (SLD)
(E) 0662 0523 WRK ZN PAV MRK REMOV (Y) (4") (SLD)
(F) 0662 0525 WRK ZN PAV MRK REMOV (Y) (4") (DOT)
(G) 0662 0532 WRK ZN PAV MRK REMOV (Y) (24") (SLD)
(H) 0662 0549 WRK ZN PAV MRK NON-REMOV (W) (4") (SLD)
(I) 0662 0553 WRK ZN PAV MRK NON-REMOV (W) (8") (SLD)
(J) 0662 0557 WRK ZN PAV MRK NON-REMOV (W) (24") (SLD)
(K) 0662 0569 WRK ZN PAV MRK NON-REMOV (Y) (4") (SLD)

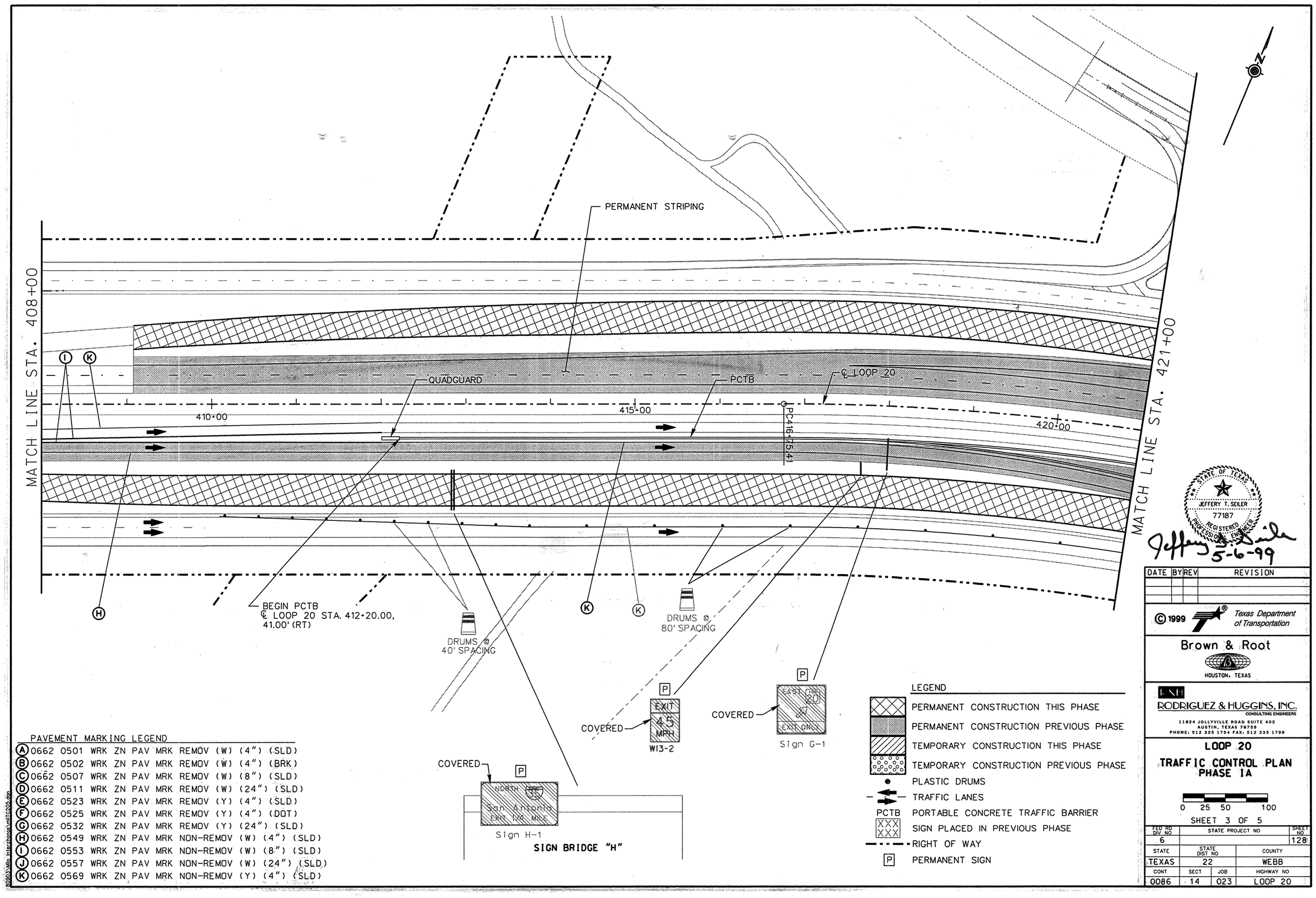

PAVEMENT MARKING LEGEND

(A) 0662 0501 WRK ZN PAV MRK REMOV (W) (4") (SLD)
(B) 0662 0502 WRK ZN PAV MRK REMOV (W) (4") (BRK)
(C) 0662 0507 WRK ZN PAV MRK REMOV (W) (8") (SLD)
(D) 0662 0511 WRK ZN PAV MRK REMOV (W) (24") (SLD)
(E) 0662 0523 WRK ZN PAV MRK REMOV (Y) (4") (SLD)
(F) 0662 0525 WRK ZN PAV MRK REMOV (Y) (4") (DOT)
(G) 0662 0532 WRK ZN PAV MRK REMOV (Y) (24") (SLD)
(H) 0662 0549 WRK ZN PAV MRK NON-REMOV (W) (4") (SLD)
(I) 0662 0553 WRK ZN PAV MRK NON-REMOV (W) (8") (SLD)
(J) 0662 0557 WRK ZN PAV MRK NON-REMOV (W) (24") (SLD)
(K) 0662 0569 WRK ZN PAV MRK NON-REMOV (Y) (4") (SLD)

STATE OF TEXAS
JEFFERY T. SEILER
77187
REGISTERED PROFESSIONAL ENGINEER

Jeffery T. Seiler
5-6-99

DATE	BY	REV	REVISION

© 1999 Texas Department of Transportation

Brown & Root
HOUSTON, TEXAS

RODRIGUEZ & HUGGINS, INC.
CONSULTING ENGINEERS
11824 JOLLYVILLE ROAD SUITE 402
AUSTIN, TEXAS 78759
PHONE: 512 335 1754 FAX: 512 335 1799

LOOP 20
TRAFFIC CONTROL PLAN
PHASE IA

0 25 50 100

SHEET 3 OF 5

FED RD DIV NO	STATE PROJECT NO		SHEET NO
6			128
STATE	STATE DIST NO		COUNTY
TEXAS	22		WEBB
CONT	SECT	JOB	HIGHWAY NO
0086	14	023	LOOP 20

80903\Mlo Interchange\mlTC205.dgn

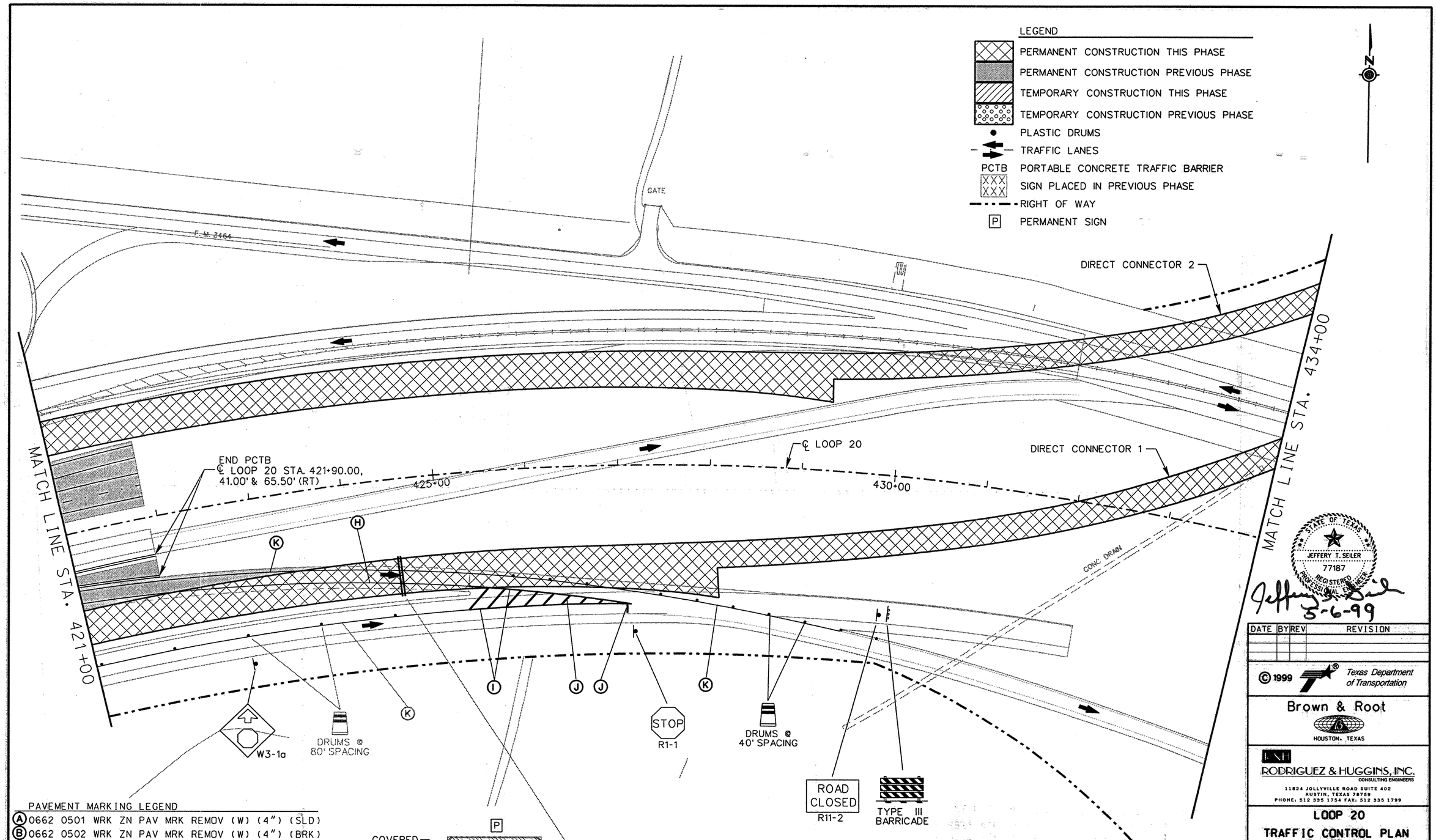

PAVEMENT MARKING LEGEND

A	0662 0501 WRK ZN PAV MRK REMOV (W) (4") (SLD)
B	0662 0502 WRK ZN PAV MRK REMOV (W) (4") (BRK)
C	0662 0507 WRK ZN PAV MRK REMOV (W) (8") (SLD)
D	0662 0511 WRK ZN PAV MRK REMOV (W) (24") (SLD)
E	0662 0523 WRK ZN PAV MRK REMOV (Y) (4") (SLD)
F	0662 0525 WRK ZN PAV MRK REMOV (Y) (4") (DOT)
G	0662 0532 WRK ZN PAV MRK REMOV (Y) (24") (SLD)
H	0662 0549 WRK ZN PAV MRK NON-REMOV (W) (4") (SLD)
I	0662 0553 WRK ZN PAV MRK NON-REMOV (W) (8") (SLD)
J	0662 0557 WRK ZN PAV MRK NON-REMOV (W) (24") (SLD)
K	0662 0569 WRK ZN PAV MRK NON-REMOV (Y) (4") (SLD)

80903\Milo Interchange\milTC206.dgn

STATE OF TEXAS
JEFFERY T. SEILER
77187
REGISTERED PROFESSIONAL ENGINEER

Jeffery T. Seiler
5-6-99

DATE	BY	REV	REVISION

© 1999 Texas Department of Transportation

Brown & Root
HOUSTON, TEXAS

RODRIGUEZ & HUGGINS, INC.
CONSULTING ENGINEERS
11824 JOLLYVILLE ROAD SUITE 402
AUSTIN, TEXAS 78759
PHONE: 512 335 1754 FAX: 512 335 1799

LOOP 20
TRAFFIC CONTROL PLAN
PHASE IA

0 25 50 100

SHEET 4 OF 5

FED RD DIV NO	STATE PROJECT NO		SHEET NO
6			129
STATE	STATE DIST NO		COUNTY
TEXAS	22		WEBB
CONT	SECT	JOB	HIGHWAY NO
0086	14	023	LOOP 20

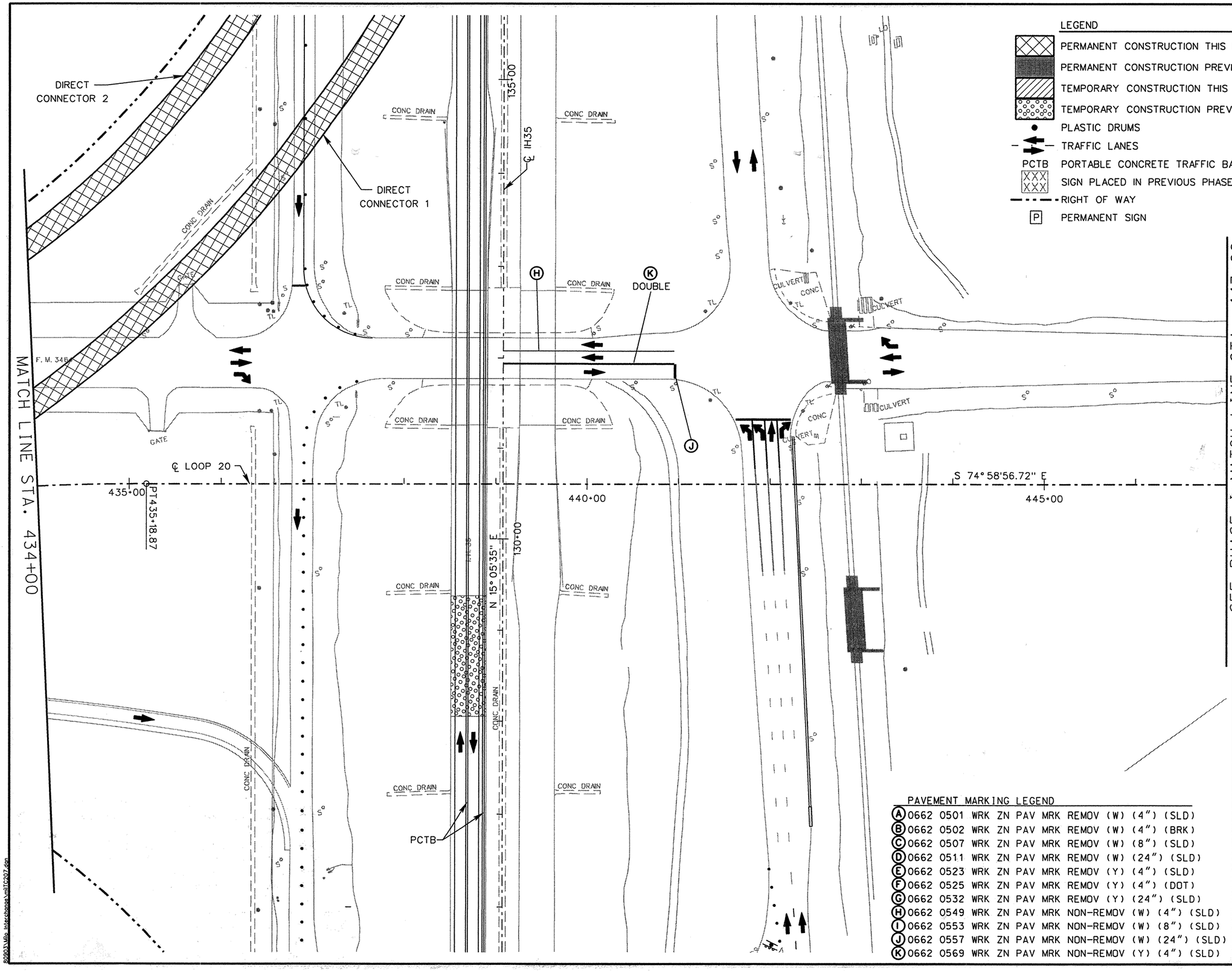

LEGEND

- PERMANENT CONSTRUCTION THIS PHASE
- PERMANENT CONSTRUCTION PREVIOUS PHASE
- TEMPORARY CONSTRUCTION THIS PHASE
- TEMPORARY CONSTRUCTION PREVIOUS PHASE
- PLASTIC DRUMS
- TRAFFIC LANES
- PCTB PORTABLE CONCRETE TRAFFIC BARRIER
- SIGN PLACED IN PREVIOUS PHASE
- RIGHT OF WAY
- P PERMANENT SIGN

PAVEMENT MARKING LEGEND

- (A) 0662 0501 WRK ZN PAV MRK REMOV (W) (4") (SLD)
- (B) 0662 0502 WRK ZN PAV MRK REMOV (W) (4") (BRK)
- (C) 0662 0507 WRK ZN PAV MRK REMOV (W) (8") (SLD)
- (D) 0662 0511 WRK ZN PAV MRK REMOV (W) (24") (SLD)
- (E) 0662 0523 WRK ZN PAV MRK REMOV (Y) (4") (SLD)
- (F) 0662 0525 WRK ZN PAV MRK REMOV (Y) (4") (DOT)
- (G) 0662 0532 WRK ZN PAV MRK REMOV (Y) (24") (SLD)
- (H) 0662 0549 WRK ZN PAV MRK NON-REMOV (W) (4") (SLD)
- (I) 0662 0553 WRK ZN PAV MRK NON-REMOV (W) (8") (SLD)
- (J) 0662 0557 WRK ZN PAV MRK NON-REMOV (W) (24") (SLD)
- (K) 0662 0569 WRK ZN PAV MRK NON-REMOV (Y) (4") (SLD)

STATE OF TEXAS
JEFFERY T. SEILER
77187
REGISTERED PROFESSIONAL ENGINEER

Jeffery T. Seiler
5-13-99

DATE	BY	REV	REVISION

© 1999 Texas Department of Transportation

Brown & Root
HOUSTON, TEXAS

RODRIGUEZ & HUGGINS, INC.
CONSULTING ENGINEERS
11824 JOLLYVILLE ROAD SUITE 402
AUSTIN, TEXAS 78759
PHONE: 512 335 1754 FAX: 512 335 1799

LOOP 20

TRAFFIC CONTROL PLAN PHASE IA

0 25 50 100

SHEET 5 OF 5

FED RD DIV NO	STATE PROJECT NO		SHEET NO
6			130
STATE	STATE DIST NO		COUNTY
TEXAS	22		WEBB
CONT	SECT	JOB	HIGHWAY NO
0086	14	023	LOOP 20

80903\Mlip Interchange\mlTC207.dgn

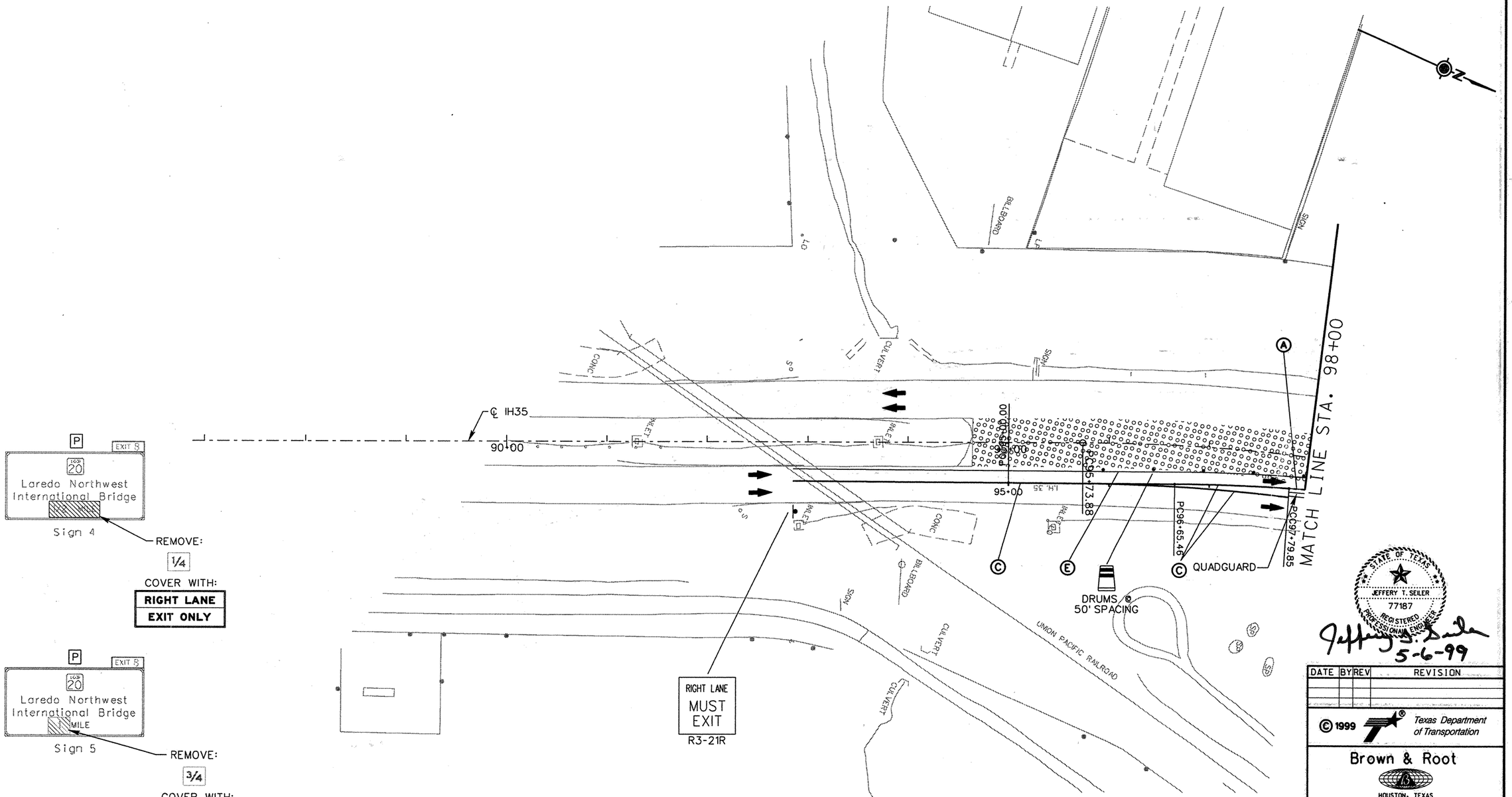

PAVEMENT MARKING LEGEND

(A) 0662 0501 WRK ZN PAV MRK REMOV (W) (4") (SLD)
(B) 0662 0502 WRK ZN PAV MRK REMOV (W) (4") (BRK)
(C) 0662 0507 WRK ZN PAV MRK REMOV (W) (8") (SLD)
(D) 0662 0511 WRK ZN PAV MRK REMOV (W) (24") (SLD)
(E) 0662 0523 WRK ZN PAV MRK REMOV (Y) (4") (SLD)
(F) 0662 0525 WRK ZN PAV MRK REMOV (Y) (4") (DOT)
(G) 0662 0532 WRK ZN PAV MRK REMOV (Y) (24") (SLD)
(H) 0662 0549 WRK ZN PAV MRK NON-REMOV (W) (4") (SLD)
(I) 0662 0553 WRK ZN PAV MRK NON-REMOV (W) (8") (SLD)
(J) 0662 0557 WRK ZN PAV MRK NON-REMOV (W) (24") (SLD)
(K) 0662 0569 WRK ZN PAV MRK NON-REMOV (Y) (4") (SLD)

LEGEND

- PERMANENT CONSTRUCTION THIS PHASE
- PERMANENT CONSTRUCTION PREVIOUS PHASE
- TEMPORARY CONSTRUCTION THIS PHASE
- TEMPORARY CONSTRUCTION PREVIOUS PHASE
- PLASTIC DRUMS
- TRAFFIC LANES
- PCTB — PORTABLE CONCRETE TRAFFIC BARRIER
- SIGN PLACED IN PREVIOUS PHASE
- RIGHT OF WAY
- P — PERMANENT SIGN

STATE OF TEXAS
JEFFERY T. SEILER
77187
REGISTERED PROFESSIONAL ENGINEER

Jeffery T. Seiler
5-6-99

DATE	BY	REV	REVISION

© 1999 Texas Department of Transportation

Brown & Root
HOUSTON, TEXAS

RODRIGUEZ & HUGGINS, INC.
CONSULTING ENGINEERS
11824 JOLLYVILLE ROAD SUITE 402
AUSTIN, TEXAS 78759
PHONE: 512 335 1754 FAX: 512 335 1799

IH 35
TRAFFIC CONTROL PLAN PHASE 1A

0 25 50 100

SHEET 1 OF 9

FED RD DIV NO	STATE PROJECT NO		SHEET NO
6			131
STATE	STATE DIST NO	COUNTY	
TEXAS	22	WEBB	
CONT	SECT	JOB	HIGHWAY NO
0018	05	057	LOOP 20

80803\Mlo_Interchanges\mlTC213.dgn

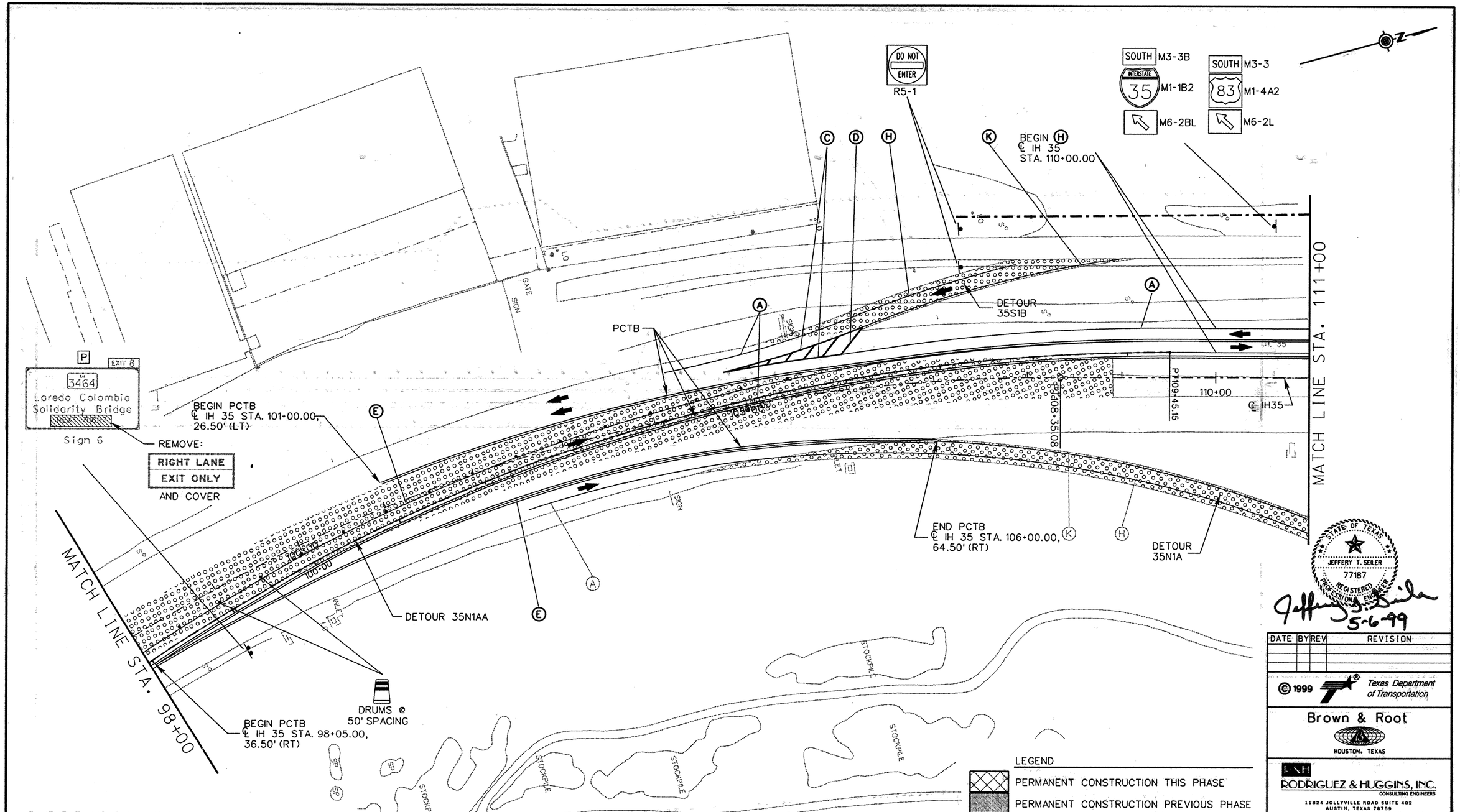

PAVEMENT MARKING LEGEND

A	0662	0501	WRK	ZN	PAV	MRK	REMOV	(W)	(4") (SLD)
B	0662	0502	WRK	ZN	PAV	MRK	REMOV	(W)	(4") (BRK)
C	0662	0507	WRK	ZN	PAV	MRK	REMOV	(W)	(8") (SLD)
D	0662	0511	WRK	ZN	PAV	MRK	REMOV	(W)	(24") (SLD)
E	0662	0523	WRK	ZN	PAV	MRK	REMOV	(Y)	(4") (SLD)
F	0662	0525	WRK	ZN	PAV	MRK	REMOV	(Y)	(4") (DOT)
G	0662	0532	WRK	ZN	PAV	MRK	REMOV	(Y)	(24") (SLD)
H	0662	0549	WRK	ZN	PAV	MRK	NON-REMOV	(W)	(4") (SLD)
I	0662	0553	WRK	ZN	PAV	MRK	NON-REMOV	(W)	(8") (SLD)
J	0662	0557	WRK	ZN	PAV	MRK	NON-REMOV	(W)	(24") (SLD)
K	0662	0569	WRK	ZN	PAV	MRK	NON-REMOV	(Y)	(4") (SLD)

LEGEND

- PERMANENT CONSTRUCTION THIS PHASE
- PERMANENT CONSTRUCTION PREVIOUS PHASE
- TEMPORARY CONSTRUCTION THIS PHASE
- TEMPORARY CONSTRUCTION PREVIOUS PHASE
- PLASTIC DRUMS
- TRAFFIC LANES
- PCTB — PORTABLE CONCRETE TRAFFIC BARRIER
- XXX — SIGN PLACED IN PREVIOUS PHASE
- RIGHT OF WAY
- P — PERMANENT SIGN

STATE OF TEXAS
JEFFERY T. SEILER
77187
REGISTERED PROFESSIONAL ENGINEER

Jeffery T. Seiler
5-6-99

DATE	BY	REV	REVISION

© 1999 Texas Department of Transportation

Brown & Root
HOUSTON, TEXAS

RNH
RODRIGUEZ & HUGGINS, INC.
CONSULTING ENGINEERS
11824 JOLLYVILLE ROAD SUITE 402
AUSTIN, TEXAS 78759
PHONE: 512 335 1754 FAX: 512 335 1799

IH 35
TRAFFIC CONTROL PLAN
PHASE IA

0 25 50 100

SHEET 2 OF 9

FED RD DIV NO	STATE PROJECT NO		SHEET NO
6			132
STATE	STATE DIST NO		COUNTY
TEXAS	22		WEBB
CONT	SECT	JOB	HIGHWAY NO
0018	05	057	LOOP 20

80903\Milo Interchange\milTC214.dgn

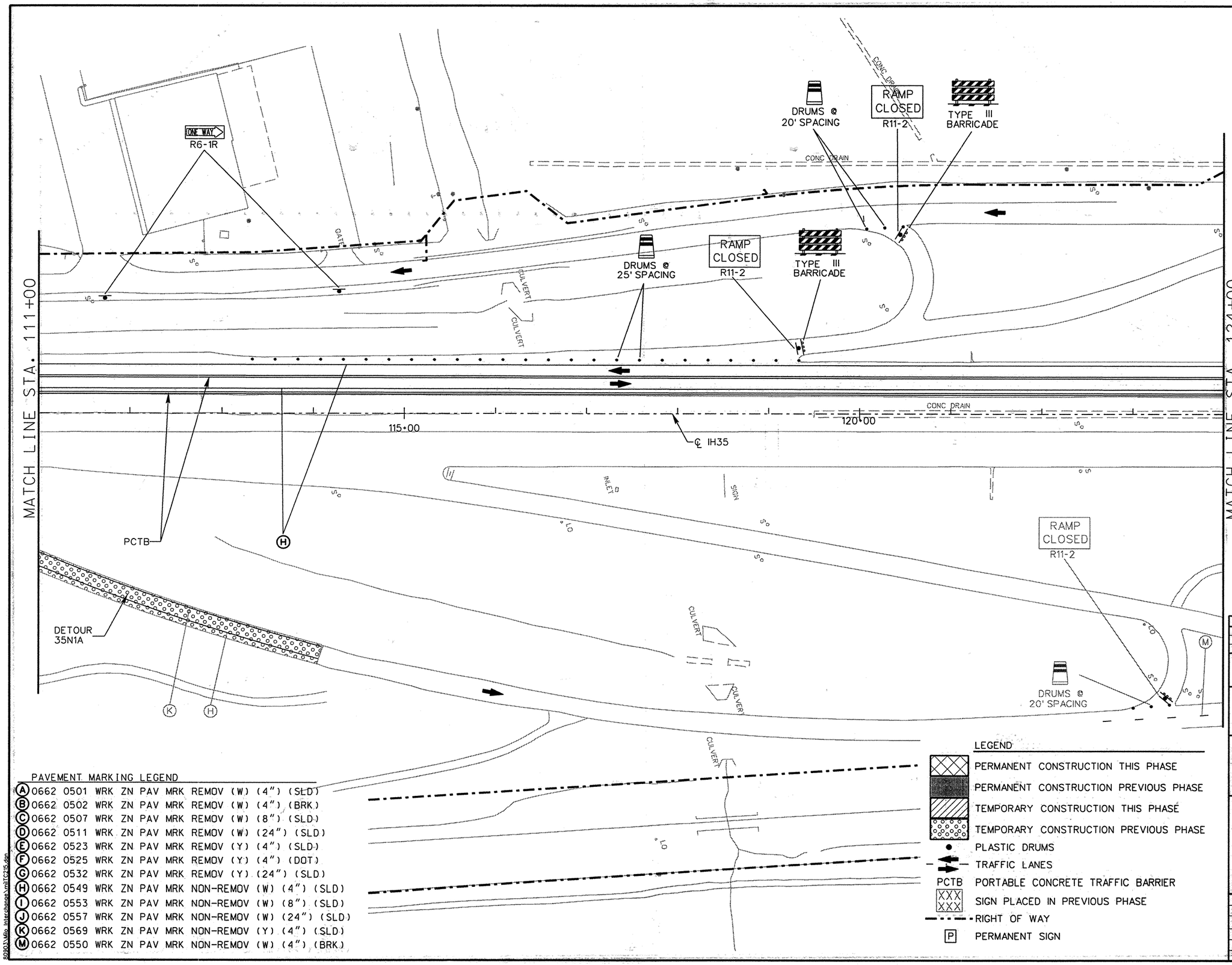

PAVEMENT MARKING LEGEND

(A)	0662	0501	WRK ZN PAV MRK	REMOV	(W)	(4")	(SLD)
(B)	0662	0502	WRK ZN PAV MRK	REMOV	(W)	(4")	(BRK)
(C)	0662	0507	WRK ZN PAV MRK	REMOV	(W)	(8")	(SLD)
(D)	0662	0511	WRK ZN PAV MRK	REMOV	(W)	(24")	(SLD)
(E)	0662	0523	WRK ZN PAV MRK	REMOV	(Y)	(4")	(SLD)
(F)	0662	0525	WRK ZN PAV MRK	REMOV	(Y)	(4")	(DOT)
(G)	0662	0532	WRK ZN PAV MRK	REMOV	(Y)	(24")	(SLD)
(H)	0662	0549	WRK ZN PAV MRK	NON-REMOV	(W)	(4")	(SLD)
(I)	0662	0553	WRK ZN PAV MRK	NON-REMOV	(W)	(8")	(SLD)
(J)	0662	0557	WRK ZN PAV MRK	NON-REMOV	(W)	(24")	(SLD)
(K)	0662	0569	WRK ZN PAV MRK	NON-REMOV	(Y)	(4")	(SLD)
(M)	0662	0550	WRK ZN PAV MRK	NON-REMOV	(W)	(4")	(BRK)

STATE OF TEXAS
JEFFERY T. SEILER
77187
REGISTERED PROFESSIONAL ENGINEER

5-13-99

DATE	BY	REV	REVISION

© 1999 Texas Department of Transportation

Brown & Root
HOUSTON, TEXAS

RODRIGUEZ & HUGGINS, INC.
CONSULTING ENGINEERS
11824 JOLLYVILLE ROAD SUITE 402
AUSTIN, TEXAS 78759
PHONE: 512 335 1754 FAX: 512 336 1799

IH 35
TRAFFIC CONTROL PLAN PHASE 1A

0 25 50 100

SHEET 3 OF 9

FED RD DIV NO	STATE PROJECT NO		SHEET NO
6			133
STATE	STATE DIST NO		COUNTY
TEXAS	22		WEBB
CONT	SECT	JOB	HIGHWAY NO
0018	05	057	LOOP 20

80903\Mlo_Interchange\smITC215.dgn

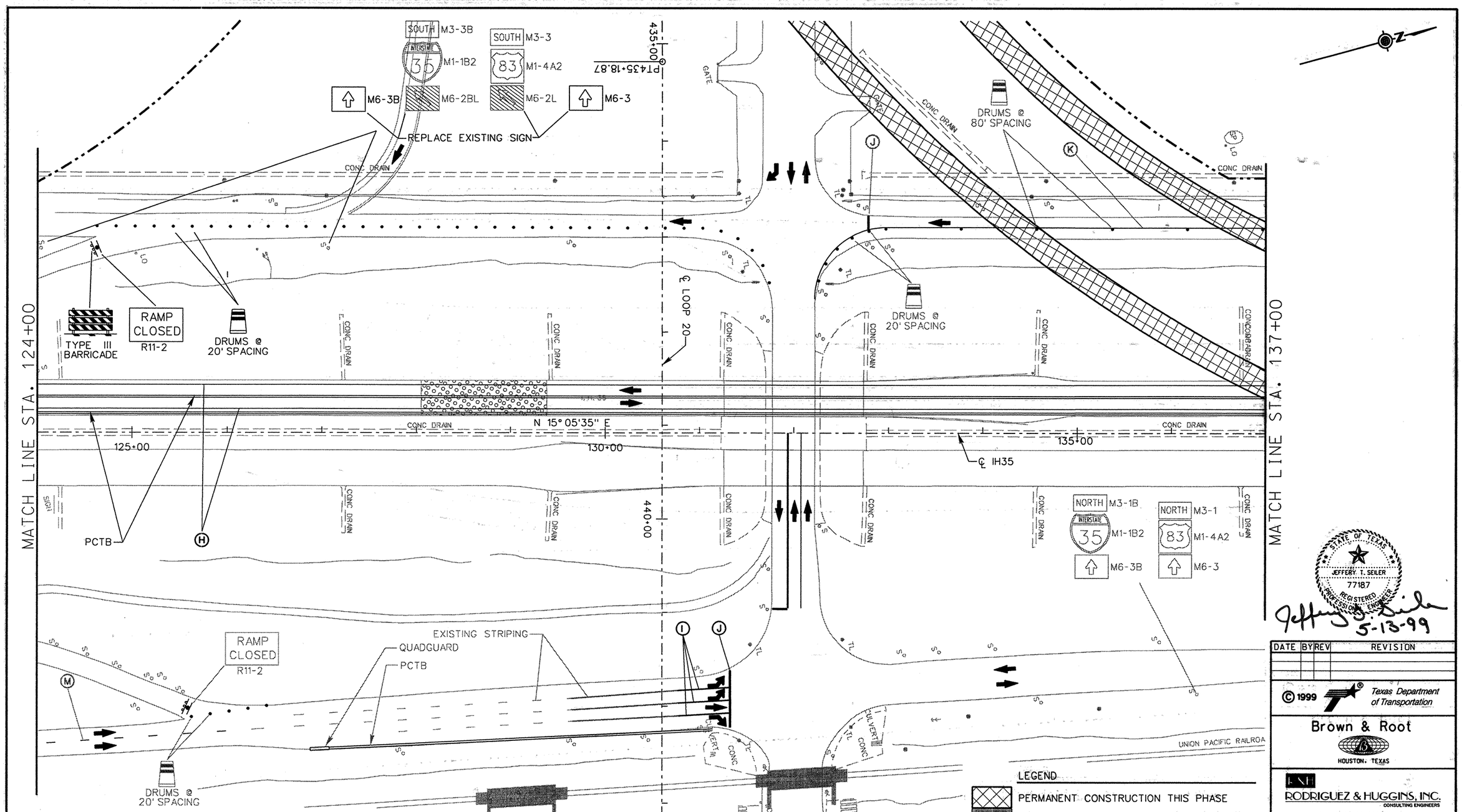

PAVEMENT MARKING LEGEND

A	0662 0501 WRK ZN PAV MRK REMOV (W) (4") (SLD)
B	0662 0502 WRK ZN PAV MRK REMOV (W) (4") (BRK)
C	0662 0507 WRK ZN PAV MRK REMOV (W) (8") (SLD)
D	0662 0511 WRK ZN PAV MRK REMOV (W) (24") (SLD)
E	0662 0523 WRK ZN PAV MRK REMOV (Y) (4") (SLD)
F	0662 0525 WRK ZN PAV MRK REMOV (Y) (4") (DOT)
G	0662 0532 WRK ZN PAV MRK REMOV (Y) (24") (SLD)
H	0662 0549 WRK ZN PAV MRK NON-REMOV (W) (4") (SLD)
I	0662 0553 WRK ZN PAV MRK NON-REMOV (W) (8") (SLD)
J	0662 0557 WRK ZN PAV MRK NON-REMOV (W) (24") (SLD)
K	0662 0569 WRK ZN PAV MRK NON-REMOV (Y) (4") (SLD)
M	0662 0550 WRK ZN PAV MRK NON-REMOV (W) (4") (BRK)

LEGEND

- PERMANENT CONSTRUCTION THIS PHASE
- PERMANENT CONSTRUCTION PREVIOUS PHASE
- TEMPORARY CONSTRUCTION THIS PHASE
- TEMPORARY CONSTRUCTION PREVIOUS PHASE
- PLASTIC DRUMS
- TRAFFIC LANES
- PCTB PORTABLE CONCRETE TRAFFIC BARRIER
- SIGN PLACED IN PREVIOUS PHASE
- RIGHT OF WAY
- P PERMANENT SIGN

STATE OF TEXAS
JEFFERY T. SEILER
77187
REGISTERED PROFESSIONAL ENGINEER

Jeffery T. Seiler
5-13-99

DATE	BY	REV	REVISION

© 1999 Texas Department of Transportation

Brown & Root
HOUSTON, TEXAS

RODRIGUEZ & HUGGINS, INC.
CONSULTING ENGINEERS
11824 JOLLYVILLE ROAD SUITE 402
AUSTIN, TEXAS 78759
PHONE: 512 335 1754 FAX: 512 335 1799

IH 35
TRAFFIC CONTROL PLAN
PHASE IA

0 25 50 100

SHEET 4 OF 9

FED RD DIV NO	STATE PROJECT NO		SHEET NO
6			134
STATE	STATE DIST NO		COUNTY
TEXAS	22		WEBB
CONT	SECT	JOB	HIGHWAY NO
0018	05	057	LOOP 20

80903\Mo_Interchange\mTC216.dgn

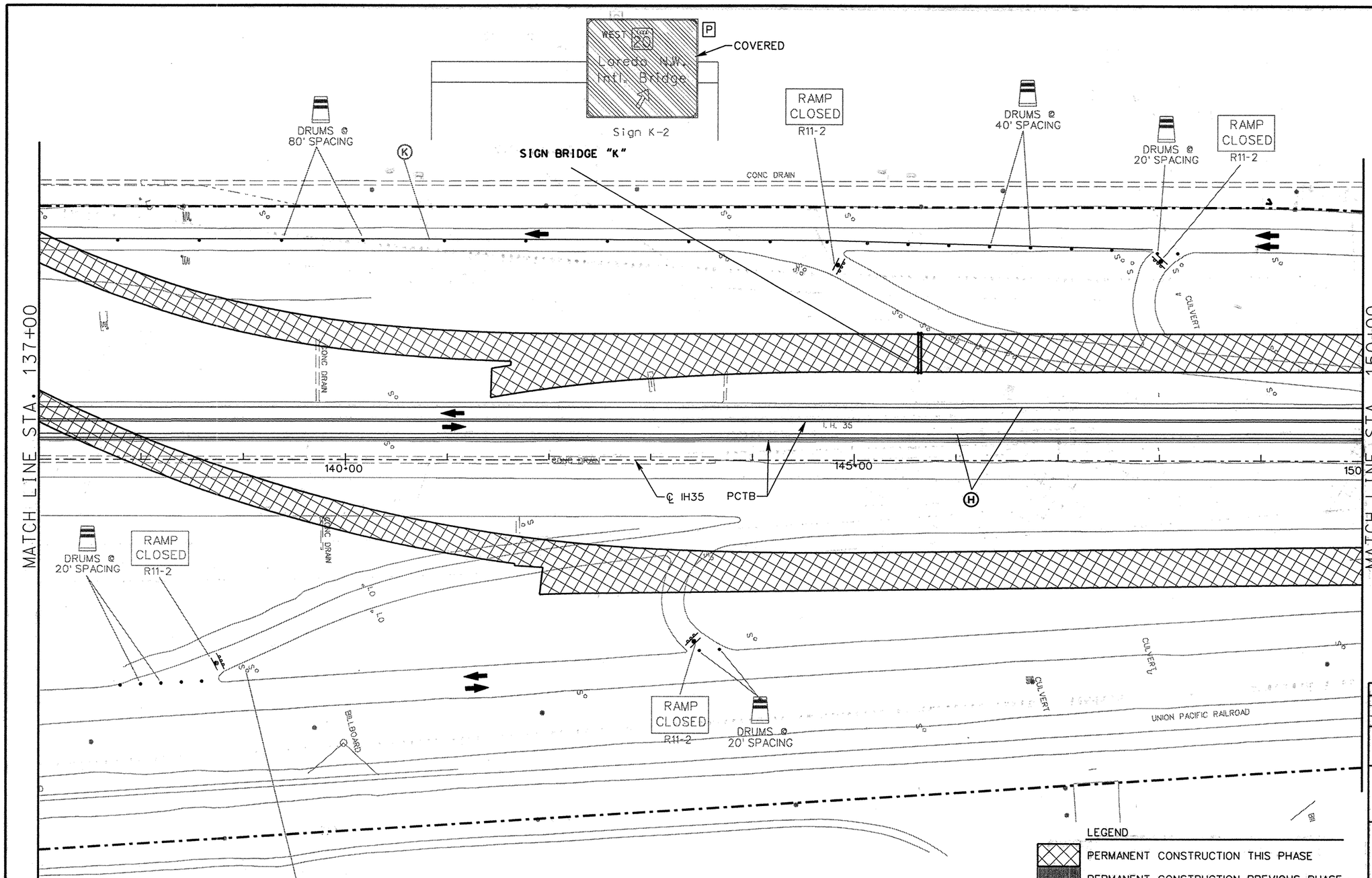

PAVEMENT MARKING LEGEND

A	0662 0501 WRK ZN PAV MRK REMOV (W) (4") (SLD)
B	0662 0502 WRK ZN PAV MRK REMOV (W) (4") (BRK)
C	0662 0507 WRK ZN PAV MRK REMOV (W) (8") (SLD)
D	0662 0511 WRK ZN PAV MRK REMOV (W) (24") (SLD)
E	0662 0523 WRK ZN PAV MRK REMOV (Y) (4") (SLD)
F	0662 0525 WRK ZN PAV MRK REMOV (Y) (4") (DOT)
G	0662 0532 WRK ZN PAV MRK REMOV (Y) (24") (SLD)
H	0662 0549 WRK ZN PAV MRK NON-REMOV (W) (4") (SLD)
I	0662 0553 WRK ZN PAV MRK NON-REMOV (W) (8") (SLD)
J	0662 0557 WRK ZN PAV MRK NON-REMOV (W) (24") (SLD)
K	0662 0569 WRK ZN PAV MRK NON-REMOV (Y) (4") (SLD)

LEGEND

- PERMANENT CONSTRUCTION THIS PHASE
- PERMANENT CONSTRUCTION PREVIOUS PHASE
- TEMPORARY CONSTRUCTION THIS PHASE
- TEMPORARY CONSTRUCTION PREVIOUS PHASE
- PLASTIC DRUMS
- TRAFFIC LANES
- PCTB PORTABLE CONCRETE TRAFFIC BARRIER
- XXX XXX SIGN PLACED IN PREVIOUS PHASE
- RIGHT OF WAY
- P PERMANENT SIGN

STATE OF TEXAS
JEFFERY T. SEILER
77187
REGISTERED PROFESSIONAL ENGINEER

Jeffery T. Seiler
5-12-99

DATE	BY	REV	REVISION

© 1999 Texas Department of Transportation

Brown & Root
HOUSTON, TEXAS

RODRIGUEZ & HUGGINS, INC.
CONSULTING ENGINEERS
11824 JOLLYVILLE ROAD SUITE 402
AUSTIN, TEXAS 78759
PHONE: 512 335 1754 FAX: 512 335 1799

IH 35
TRAFFIC CONTROL PLAN PHASE IA

0 25 50 100

SHEET 5 OF 9

FED RD DIV NO	STATE PROJECT NO		SHEET NO
6			135
STATE	STATE DIST NO		COUNTY
TEXAS	22		WEBB
CONT	SECT	JOB	HIGHWAY NO
0018	05	057	LOOP 20

80903\Mlo Interchange\mlTC217.dgn

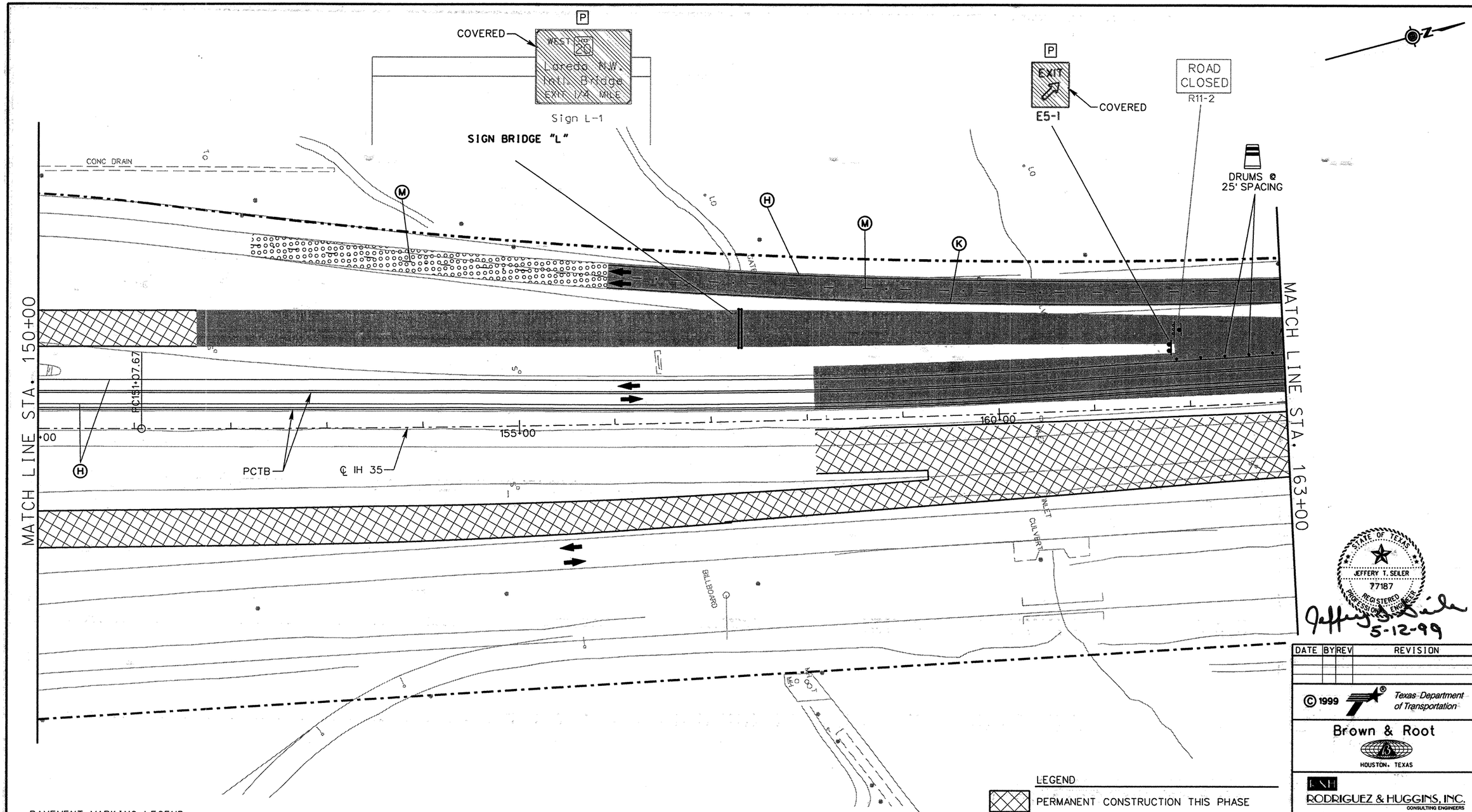

PAVEMENT MARKING LEGEND

A	0662 0501 WRK ZN PAV MRK REMOV (W) (4") (SLD)
B	0662 0502 WRK ZN PAV MRK REMOV (W) (4") (BRK)
C	0662 0507 WRK ZN PAV MRK REMOV (W) (8") (SLD)
D	0662 0511 WRK ZN PAV MRK REMOV (W) (24") (SLD)
E	0662 0523 WRK ZN PAV MRK REMOV (Y) (4") (SLD)
F	0662 0525 WRK ZN PAV MRK REMOV (Y) (4") (DOT)
G	0662 0532 WRK ZN PAV MRK REMOV (Y) (24") (SLD)
H	0662 0549 WRK ZN PAV MRK NON-REMOV (W) (4") (SLD)
I	0662 0553 WRK ZN PAV MRK NON-REMOV (W) (8") (SLD)
J	0662 0557 WRK ZN PAV MRK NON-REMOV (W) (24") (SLD)
K	0662 0569 WRK ZN PAV MRK NON-REMOV (Y) (4") (SLD)
M	0662 0550 WRK ZN PAV MRK NON-REMOV (W) (4") (BRK)

LEGEND

- PERMANENT CONSTRUCTION THIS PHASE
- PERMANENT CONSTRUCTION PREVIOUS PHASE
- TEMPORARY CONSTRUCTION THIS PHASE
- TEMPORARY CONSTRUCTION PREVIOUS PHASE
- PLASTIC DRUMS
- TRAFFIC LANES
- PCTB PORTABLE CONCRETE TRAFFIC BARRIER
- XXX SIGN PLACED IN PREVIOUS PHASE
- RIGHT OF WAY
- P PERMANENT SIGN

STATE OF TEXAS
JEFFERY T. SEILER
77187
REGISTERED PROFESSIONAL ENGINEER

Jeffery T. Seiler
5-12-99

DATE	BY	REV	REVISION

© 1999 Texas Department of Transportation

Brown & Root
HOUSTON, TEXAS

RNH
RODRIGUEZ & HUGGINS, INC.
CONSULTING ENGINEERS
11824 JOLLYVILLE ROAD SUITE 402
AUSTIN, TEXAS 78759
PHONE: 512 335 1754 FAX: 512 335 1799

IH 35
TRAFFIC CONTROL PLAN
PHASE IA

0 25 50 100

SHEET 6 OF 9

FED RD DIV NO	STATE PROJECT NO		SHEET NO
6			136
STATE	STATE DIST NO		COUNTY
TEXAS	22		WEBB
CONT	SECT	JOB	HIGHWAY NO
0018	05	057	LOOP 20

80903\Milo Interchange\mitC218.dgn

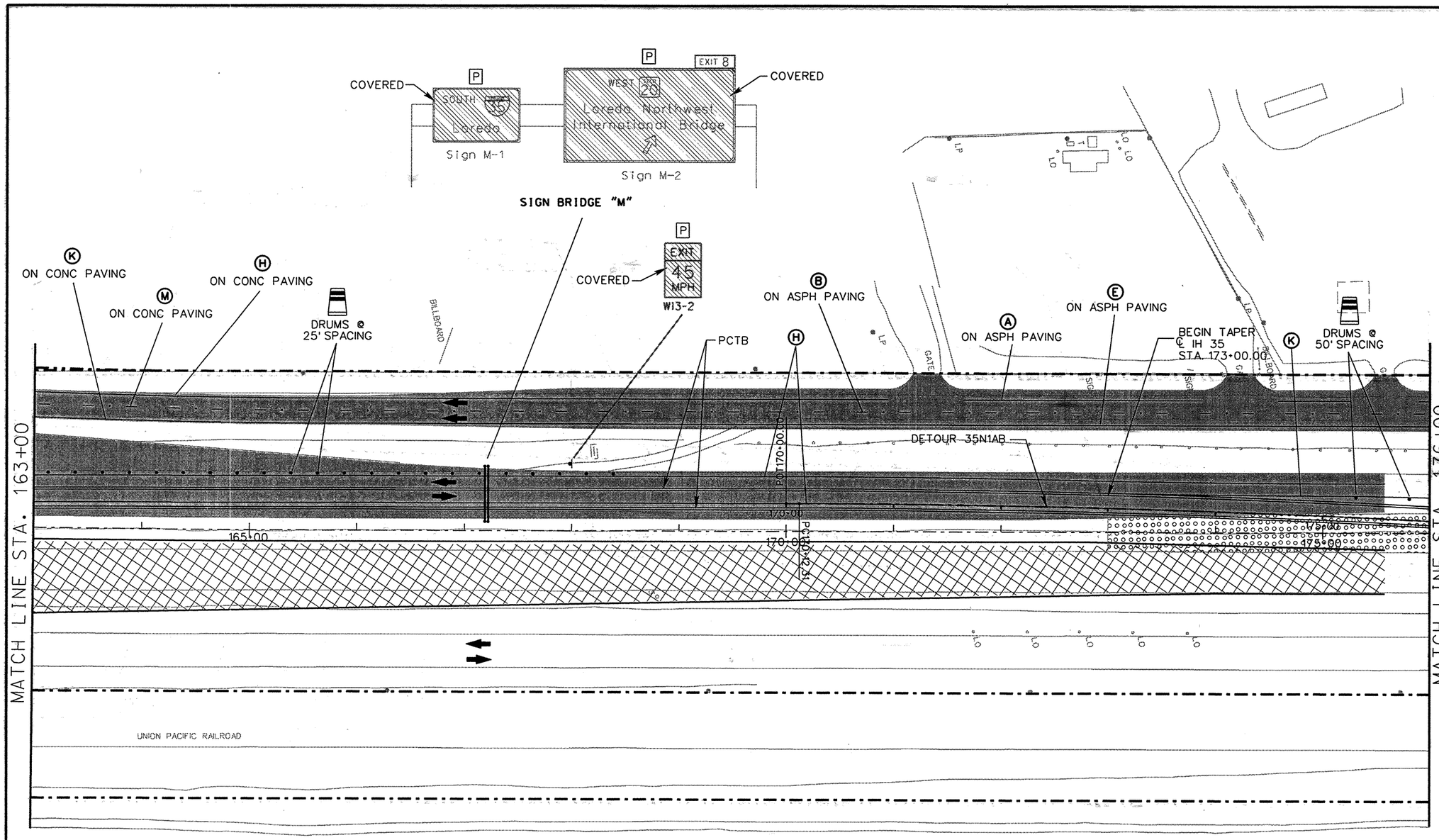

PAVEMENT MARKING LEGEND

A	0662 0501 WRK ZN PAV MRK REMOV (W) (4") (SLD)
B	0662 0502 WRK ZN PAV MRK REMOV (W) (4") (BRK)
C	0662 0507 WRK ZN PAV MRK REMOV (W) (8") (SLD)
D	0662 0511 WRK ZN PAV MRK REMOV (W) (24") (SLD)
E	0662 0523 WRK ZN PAV MRK REMOV (Y) (4") (SLD)
F	0662 0525 WRK ZN PAV MRK REMOV (Y) (4") (DOT)
G	0662 0532 WRK ZN PAV MRK REMOV (Y) (24") (SLD)
H	0662 0549 WRK ZN PAV MRK NON-REMOV (W) (4") (SLD)
I	0662 0553 WRK ZN PAV MRK NON-REMOV (W) (8") (SLD)
J	0662 0557 WRK ZN PAV MRK NON-REMOV (W) (24") (SLD)
K	0662 0569 WRK ZN PAV MRK NON-REMOV (Y) (4") (SLD)
M	0662 0550 WRK ZN PAV MRK NON-REMOV (W) (4") (BRK)

LEGEND

- PERMANENT CONSTRUCTION THIS PHASE
- PERMANENT CONSTRUCTION PREVIOUS PHASE
- TEMPORARY CONSTRUCTION THIS PHASE
- TEMPORARY CONSTRUCTION PREVIOUS PHASE
- PLASTIC DRUMS
- TRAFFIC LANES
- PCTB PORTABLE CONCRETE TRAFFIC BARRIER
- XXX SIGN PLACED IN PREVIOUS PHASE
- RIGHT OF WAY
- P PERMANENT SIGN

STATE OF TEXAS
JEFFERY T. SEILER
77187
REGISTERED PROFESSIONAL ENGINEER

Jeffery T. Seiler
5-12-99

DATE	BY	REV	REVISION

© 1999 Texas Department of Transportation

Brown & Root
HOUSTON, TEXAS

RODRIGUEZ & HUGGINS, INC.
CONSULTING ENGINEERS
11824 JOLLYVILLE ROAD SUITE 402
AUSTIN, TEXAS 78759
PHONE: 512 335 1754 FAX: 512 335 1799

IH 35
TRAFFIC CONTROL PLAN
PHASE IA

0 25 50 100

SHEET 7 OF 9

FED RD DIV NO	STATE PROJECT NO		SHEET NO
6			137
STATE	STATE DIST NO		COUNTY
TEXAS	22		WEBB
CONT	SECT	JOB	HIGHWAY NO
0018	05	057	LOOP 20

80903\Mile Interchange\milTC219.dgn

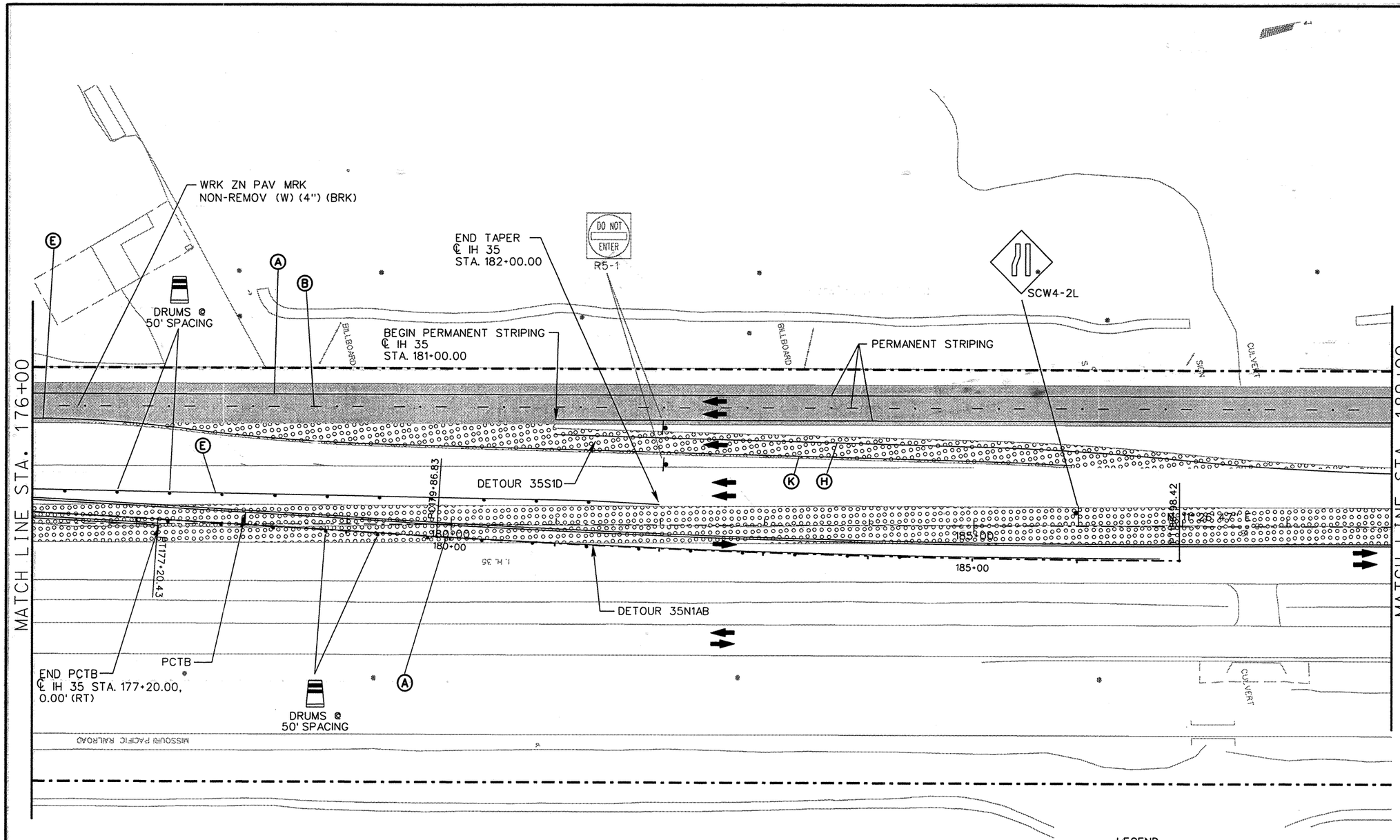

PAVEMENT MARKING LEGEND

A	0662 0501 WRK ZN PAV MRK REMOV (W) (4") (SLD)
B	0662 0502 WRK ZN PAV MRK REMOV (W) (4") (BRK)
C	0662 0507 WRK ZN PAV MRK REMOV (W) (8") (SLD)
D	0662 0511 WRK ZN PAV MRK REMOV (W) (24") (SLD)
E	0662 0523 WRK ZN PAV MRK REMOV (Y) (4") (SLD)
F	0662 0525 WRK ZN PAV MRK REMOV (Y) (4") (DOT)
G	0662 0532 WRK ZN PAV MRK REMOV (Y) (24") (SLD)
H	0662 0549 WRK ZN PAV MRK NON-REMOV (W) (4") (SLD)
I	0662 0553 WRK ZN PAV MRK NON-REMOV (W) (8") (SLD)
J	0662 0557 WRK ZN PAV MRK NON-REMOV (W) (24") (SLD)
K	0662 0569 WRK ZN PAV MRK NON-REMOV (Y) (4") (SLD)

LEGEND

- PERMANENT CONSTRUCTION THIS PHASE
- PERMANENT CONSTRUCTION PREVIOUS PHASE
- TEMPORARY CONSTRUCTION THIS PHASE
- TEMPORARY CONSTRUCTION PREVIOUS PHASE
- PLASTIC DRUMS
- TRAFFIC LANES
- PCTB PORTABLE CONCRETE TRAFFIC BARRIER
- XXX SIGN PLACED IN PREVIOUS PHASE
- RIGHT OF WAY
- P PERMANENT SIGN

STATE OF TEXAS
JEFFERY T. SEILER
77187
REGISTERED PROFESSIONAL ENGINEER

Jeffery T. Seiler
5-6-99

DATE	BY	REV	REVISION

© 1999 Texas Department of Transportation

Brown & Root
HOUSTON, TEXAS

RODRIGUEZ & HUGGINS, INC.
CONSULTING ENGINEERS
11824 JOLLYVILLE ROAD SUITE 402
AUSTIN, TEXAS 78759
PHONE: 512 335 1754 FAX: 512 335 1799

IH 35
TRAFFIC CONTROL PLAN
PHASE IA

0 25 50 100

SHEET 8 OF 9

FED RD DIV NO	STATE PROJECT NO		SHEET NO
6			138
STATE	STATE DIST NO		COUNTY
TEXAS	22		WEBB
CONT	SECT	JOB	HIGHWAY NO
0018	05	057	LOOP 20

80903\Milo Interchange\milTC220.dgn

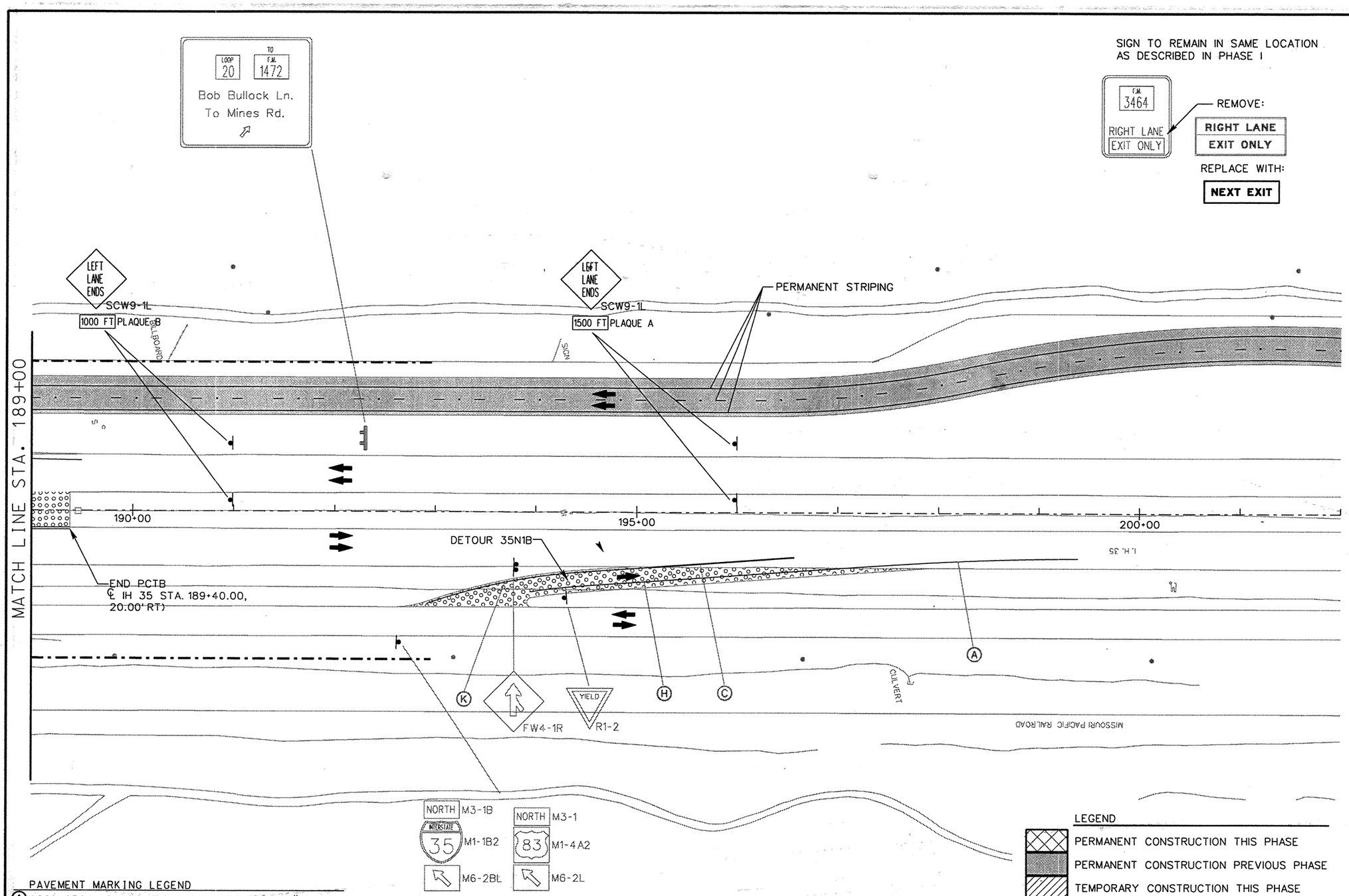

PAVEMENT MARKING LEGEND

(A) 0662 0501 WRK ZN PAV MRK REMOV (W) (4") (SLD)
(B) 0662 0502 WRK ZN PAV MRK REMOV (W) (4") (BRK)
(C) 0662 0507 WRK ZN PAV MRK REMOV (W) (8") (SLD)
(D) 0662 0511 WRK ZN PAV MRK REMOV (W) (24") (SLD)
(E) 0662 0523 WRK ZN PAV MRK REMOV (Y) (4") (SLD)
(F) 0662 0525 WRK ZN PAV MRK REMOV (Y) (4") (DOT)
(G) 0662 0532 WRK ZN PAV MRK REMOV (Y) (24") (SLD)
(H) 0662 0549 WRK ZN PAV MRK NON-REMOV (W) (4") (SLD)
(I) 0662 0553 WRK ZN PAV MRK NON-REMOV (W) (8") (SLD)
(J) 0662 0557 WRK ZN PAV MRK NON-REMOV (W) (24") (SLD)
(K) 0662 0569 WRK ZN PAV MRK NON-REMOV (Y) (4") (SLD)

LEGEND

- PERMANENT CONSTRUCTION THIS PHASE
- PERMANENT CONSTRUCTION PREVIOUS PHASE
- TEMPORARY CONSTRUCTION THIS PHASE
- TEMPORARY CONSTRUCTION PREVIOUS PHASE
- PLASTIC DRUMS
- TRAFFIC LANES
- PCTB PORTABLE CONCRETE TRAFFIC BARRIER
- XXX SIGN PLACED IN PREVIOUS PHASE
- RIGHT OF WAY
- P PERMANENT SIGN

STATE OF TEXAS
JEFFERY T. SEILER
77187
REGISTERED PROFESSIONAL ENGINEER

Jeffery T. Seiler
5-6-99

DATE	BY	REV	REVISION

© 1999 Texas Department of Transportation

Brown & Root
HOUSTON, TEXAS

RODRIGUEZ & HUGGINS, INC.
CONSULTING ENGINEERS
11824 JOLLYVILLE ROAD SUITE 402
AUSTIN, TEXAS 78759
PHONE: 512 335 1754 FAX: 512 335 1799

IH 35

TRAFFIC CONTROL PLAN
PHASE IA

0 25 50 100

SHEET 9 OF 9

FED RD DIV NO	STATE PROJECT NO		SHEET NO
6			139
STATE	STATE DIST NO		COUNTY
TEXAS	22		WEBB
CONT	SECT	JOB	HIGHWAY NO
0018	05	057	LOOP 20

80903\Mfg Interchange\mTC221.dgn

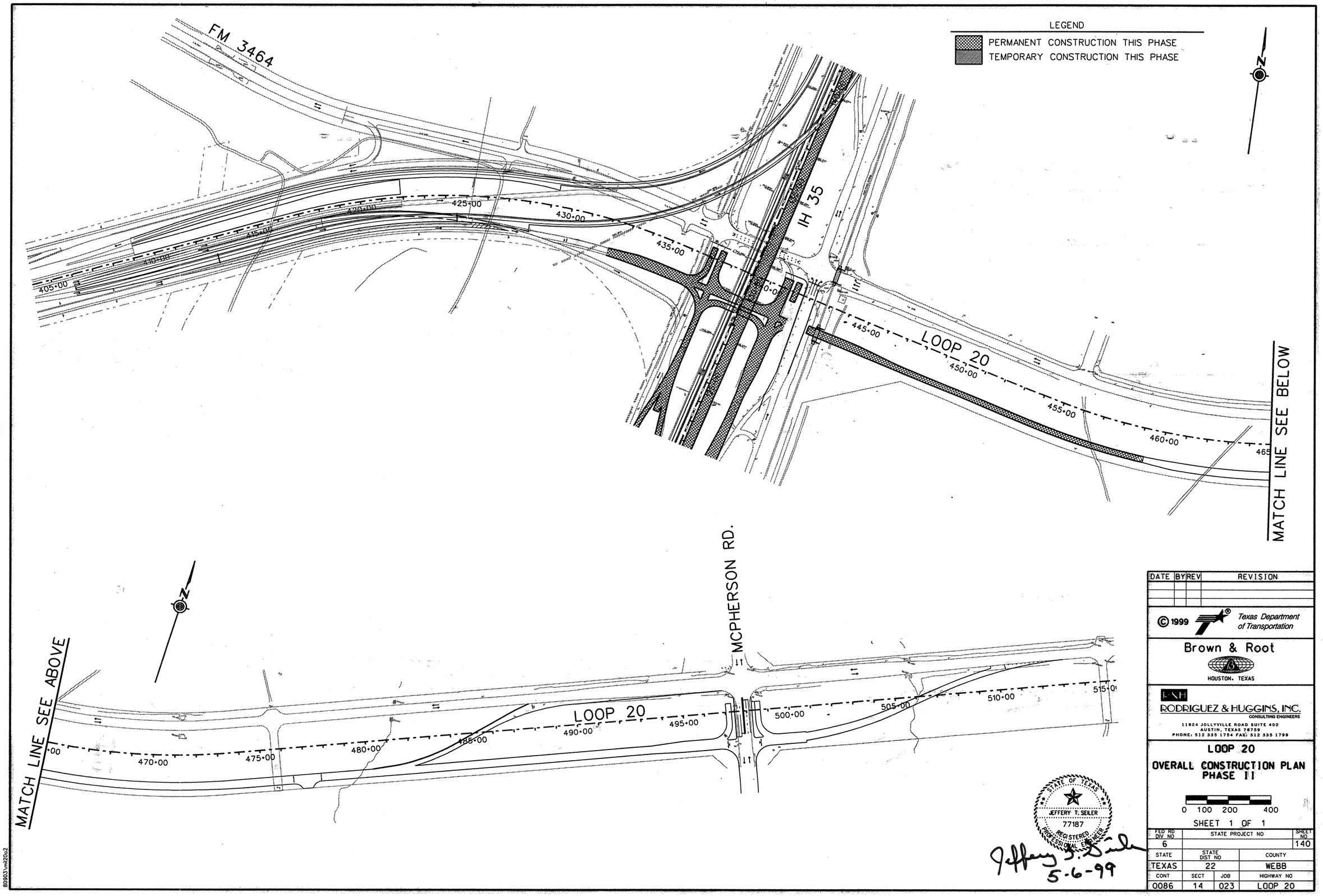

DATE	BY	REV	REVISION

© 1999 Texas Department of Transportation

Brown & Root
HOUSTON, TEXAS

RHI
RODRIGUEZ & HUGGINS, INC.
CONSULTING ENGINEERS
11824 JOLLYVILLE ROAD SUITE 402
AUSTIN, TEXAS 78759
PHONE: 512 335 1754 FAX: 512 335 1799

LOOP 20
OVERALL CONSTRUCTION PLAN PHASE II

0 100 200 400

SHEET 1 OF 1

STATE OF TEXAS
JEFFERY T. SEILER
77187
REGISTERED PROFESSIONAL ENGINEER

Jeffery T. Seiler
5-6-99

FED RD DIV NO	STATE PROJECT NO		SHEET NO
6			140
STATE	STATE DIST NO		COUNTY
TEXAS	22		WEBB
CONT	SECT	JOB	HIGHWAY NO
0086	14	023	LOOP 20

80903\vnl20o2

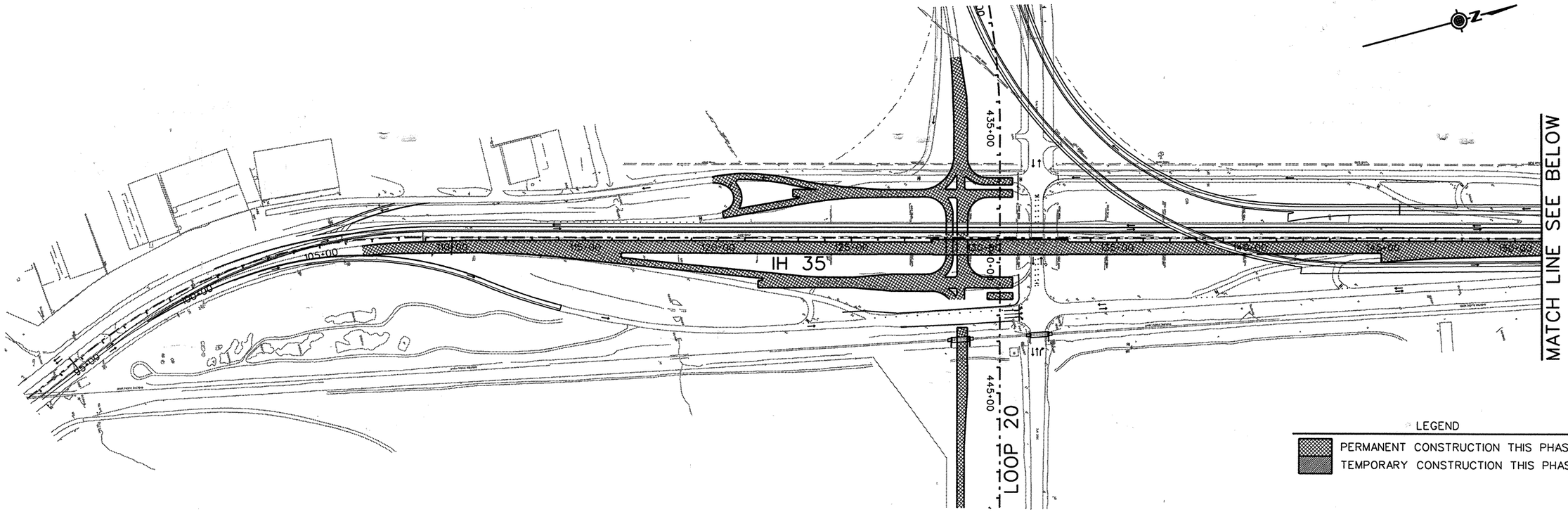

LEGEND

PERMANENT CONSTRUCTION THIS PHASE

TEMPORARY CONSTRUCTION THIS PHASE

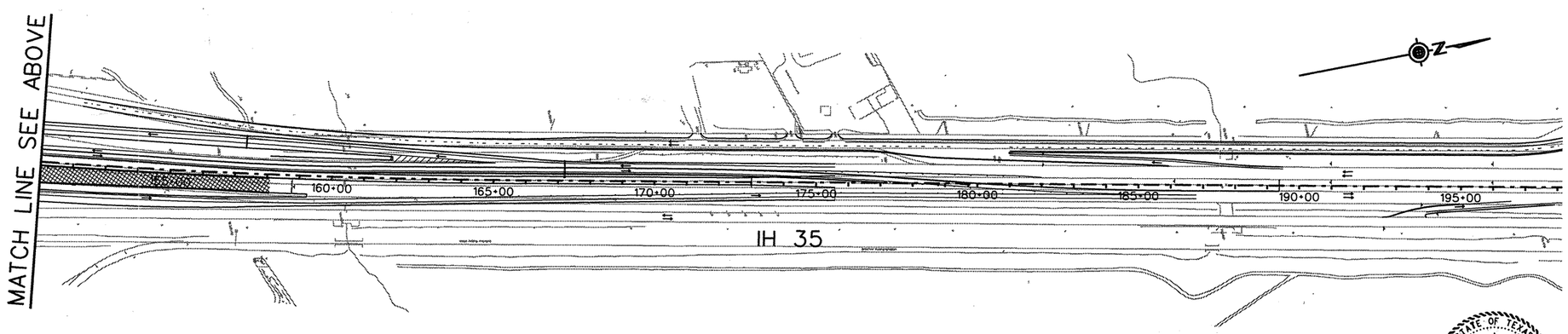

STATE OF TEXAS
JEFFERY T. SEILER
77187
REGISTERED
PROFESSIONAL ENGINEER

Jeffery T. Seiler
5-6-99

DATE	BY	REV	REVISION

© 1999 Texas Department of Transportation

Brown & Root
HOUSTON, TEXAS

RODRIGUEZ & HUGGINS, INC.
CONSULTING ENGINEERS
11824 JOLLYVILLE ROAD SUITE 402
AUSTIN, TEXAS 78759
PHONE: 512 335 1754 FAX: 512 335 1799

IH 35
OVERALL CONSTRUCTION PLAN PHASE II

0 100 200 400

SHEET 1 OF 1

FED RD DIV NO	STATE PROJECT NO		SHEET NO
6			141
STATE	STATE DIST NO		COUNTY
TEXAS	22		WEBB
CONT	SECT	JOB	HIGHWAY NO
0018	06	131	LOOP 20

80903\mi35o2

PAVEMENT MARKING LEGEND

Ⓐ 0662 0501 WRK ZN PAV MRK REMOV (W) (4") (SLD)
Ⓑ 0662 0502 WRK ZN PAV MRK REMOV (W) (4") (BRK)
Ⓒ 0662 0507 WRK ZN PAV MRK REMOV (W) (8") (SLD)
Ⓓ 0662 0511 WRK ZN PAV MRK REMOV (W) (24") (SLD)
Ⓔ 0662 0523 WRK ZN PAV MRK REMOV (Y) (4") (SLD)
Ⓕ 0662 0525 WRK ZN PAV MRK REMOV (Y) (4") (DOT)
Ⓖ 0662 0532 WRK ZN PAV MRK REMOV (Y) (24") (SLD)
Ⓗ 0662 0549 WRK ZN PAV MRK NON-REMOV (W) (4") (SLD)
Ⓘ 0662 0553 WRK ZN PAV MRK NON-REMOV (W) (8") (SLD)
Ⓙ 0662 0557 WRK ZN PAV MRK NON-REMOV (W) (24") (SLD)
Ⓚ 0662 0569 WRK ZN PAV MRK NON-REMOV (Y) (4") (SLD)

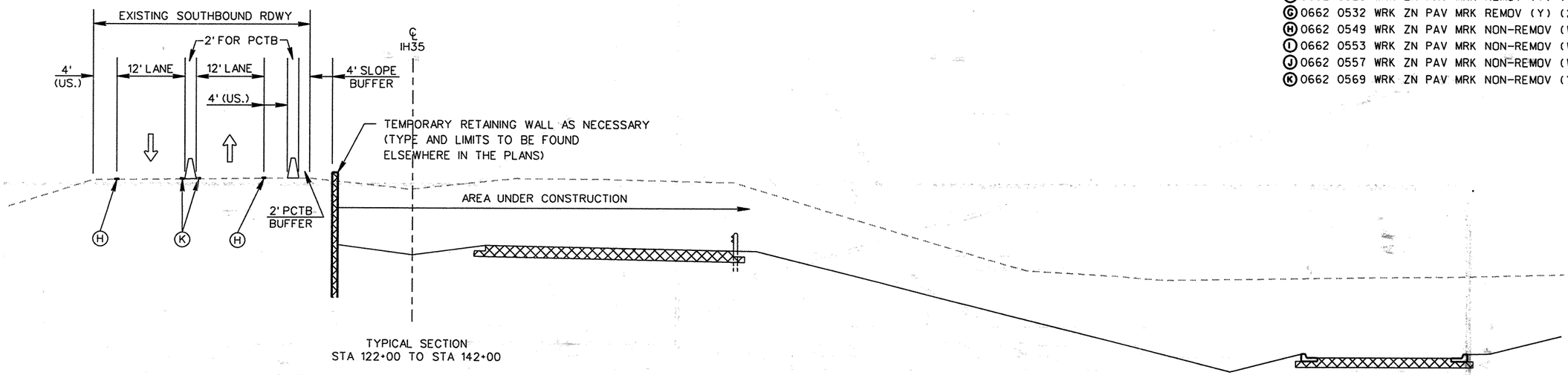

TYPICAL SECTION
STA 122+00 TO STA 142+00

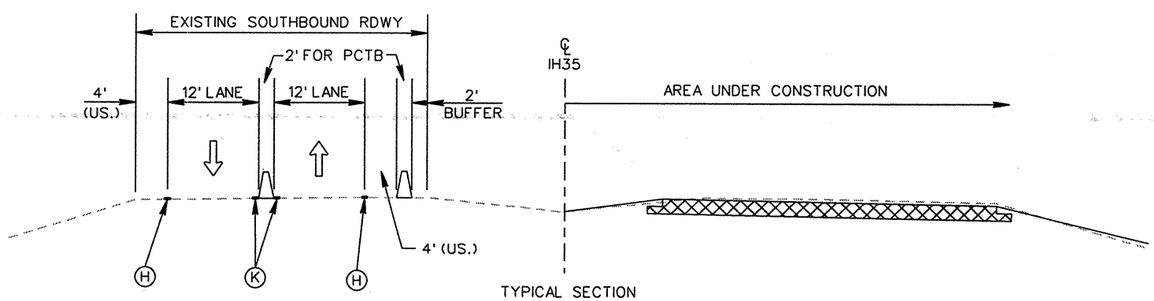

TYPICAL SECTION
STA 106+85 TO STA 122+00 &
STA 142+00 TO STA 158+08.21

NOTES: SEE PHASE IA TYPICAL SECTIONS FOR TRAFFIC CONTROL SET-UP FOR STATION 158+08.21 TO STATION 175+30 THIS PHASE, PHASE IIA AND FOR PHASE III.

THE ABOVE TRAFFIC CONTROL SET-UPS MAY ALSO BE USED FOR PHASE IIA AND PHASE III TRAFFIC CONTROL.

STATE OF TEXAS
JEFFERY T. SEILER
77187
REGISTERED PROFESSIONAL ENGINEER

5-6-99

DATE	BY	REV	REVISION

© 1999 Texas Department of Transportation

Brown & Root
HOUSTON, TEXAS

RHI
RODRIGUEZ & HUGGINS, INC.
CONSULTING ENGINEERS
11824 JOLLYVILLE ROAD SUITE 402
AUSTIN, TEXAS 78759
PHONE: 512 335 1754 FAX: 512 335 1799

IH 35
TCP TYPICAL SECTIONS
PHASE II

0 10 20

SHEET 1 OF 1

FED RD DIV NO	STATE PROJECT NO		SHEET NO
6			142
STATE	STATE DIST NO		COUNTY
TEXAS	22		WEBB
CONT	SECT	JOB	HIGHWAY NO
0018	05	057	LOOP 20

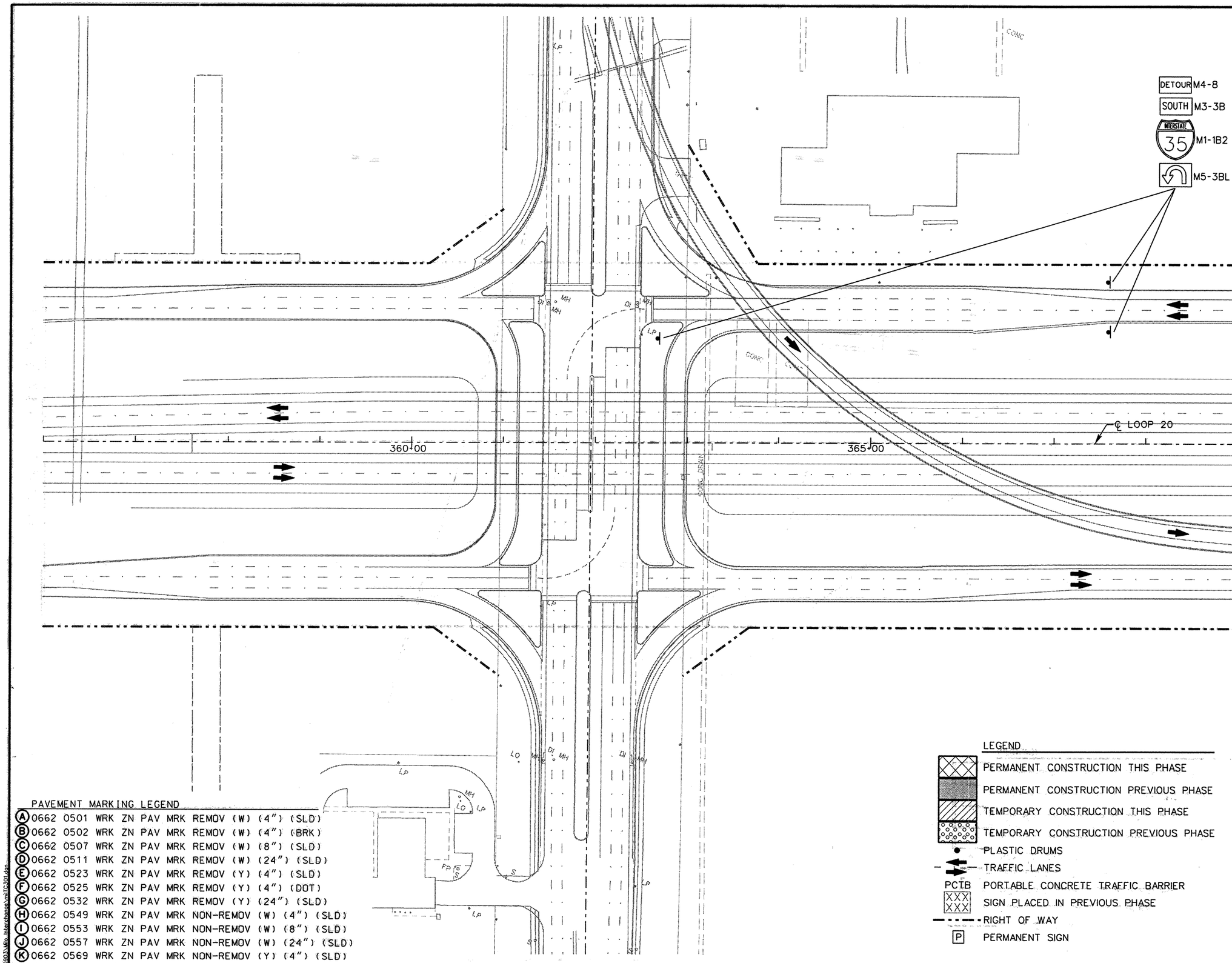

PAVEMENT MARKING LEGEND

(A) 0662 0501 WRK ZN PAV MRK REMOV (W) (4") (SLD)
(B) 0662 0502 WRK ZN PAV MRK REMOV (W) (4") (BRK)
(C) 0662 0507 WRK ZN PAV MRK REMOV (W) (8") (SLD)
(D) 0662 0511 WRK ZN PAV MRK REMOV (W) (24") (SLD)
(E) 0662 0523 WRK ZN PAV MRK REMOV (Y) (4") (SLD)
(F) 0662 0525 WRK ZN PAV MRK REMOV (Y) (4") (DOT)
(G) 0662 0532 WRK ZN PAV MRK REMOV (Y) (24") (SLD)
(H) 0662 0549 WRK ZN PAV MRK NON-REMOV (W) (4") (SLD)
(I) 0662 0553 WRK ZN PAV MRK NON-REMOV (W) (8") (SLD)
(J) 0662 0557 WRK ZN PAV MRK NON-REMOV (W) (24") (SLD)
(K) 0662 0569 WRK ZN PAV MRK NON-REMOV (Y) (4") (SLD)

LEGEND

- PERMANENT CONSTRUCTION THIS PHASE
- PERMANENT CONSTRUCTION PREVIOUS PHASE
- TEMPORARY CONSTRUCTION THIS PHASE
- TEMPORARY CONSTRUCTION PREVIOUS PHASE
- PLASTIC DRUMS
- TRAFFIC LANES
- PCTB PORTABLE CONCRETE TRAFFIC BARRIER
- XXX SIGN PLACED IN PREVIOUS PHASE
- RIGHT OF WAY
- P PERMANENT SIGN

STATE OF TEXAS
JEFFERY T. SEILER
77187
REGISTERED PROFESSIONAL ENGINEER

Jeffery T. Seiler
5-6-99

DATE	BY	REV	REVISION

© 1999 Texas Department of Transportation

Brown & Root
HOUSTON, TEXAS

RNH
RODRIGUEZ & HUGGINS, INC.
CONSULTING ENGINEERS
11824 JOLLYVILLE ROAD SUITE 402
AUSTIN, TEXAS 78759
PHONE: 512 335 1754 FAX: 512 335 1799

LOOP 20
TRAFFIC CONTROL PLAN PHASE II

0 25 50 100

SHEET 1 OF 8

FED RD DIV NO	STATE PROJECT NO		SHEET NO
6			143
STATE	STATE DIST NO		COUNTY
TEXAS	22		WEBB
CONT	SECT	JOB	HIGHWAY NO
0086	14	023	LOOP 20

80903\Milo Interchange\mlTC301.dgn

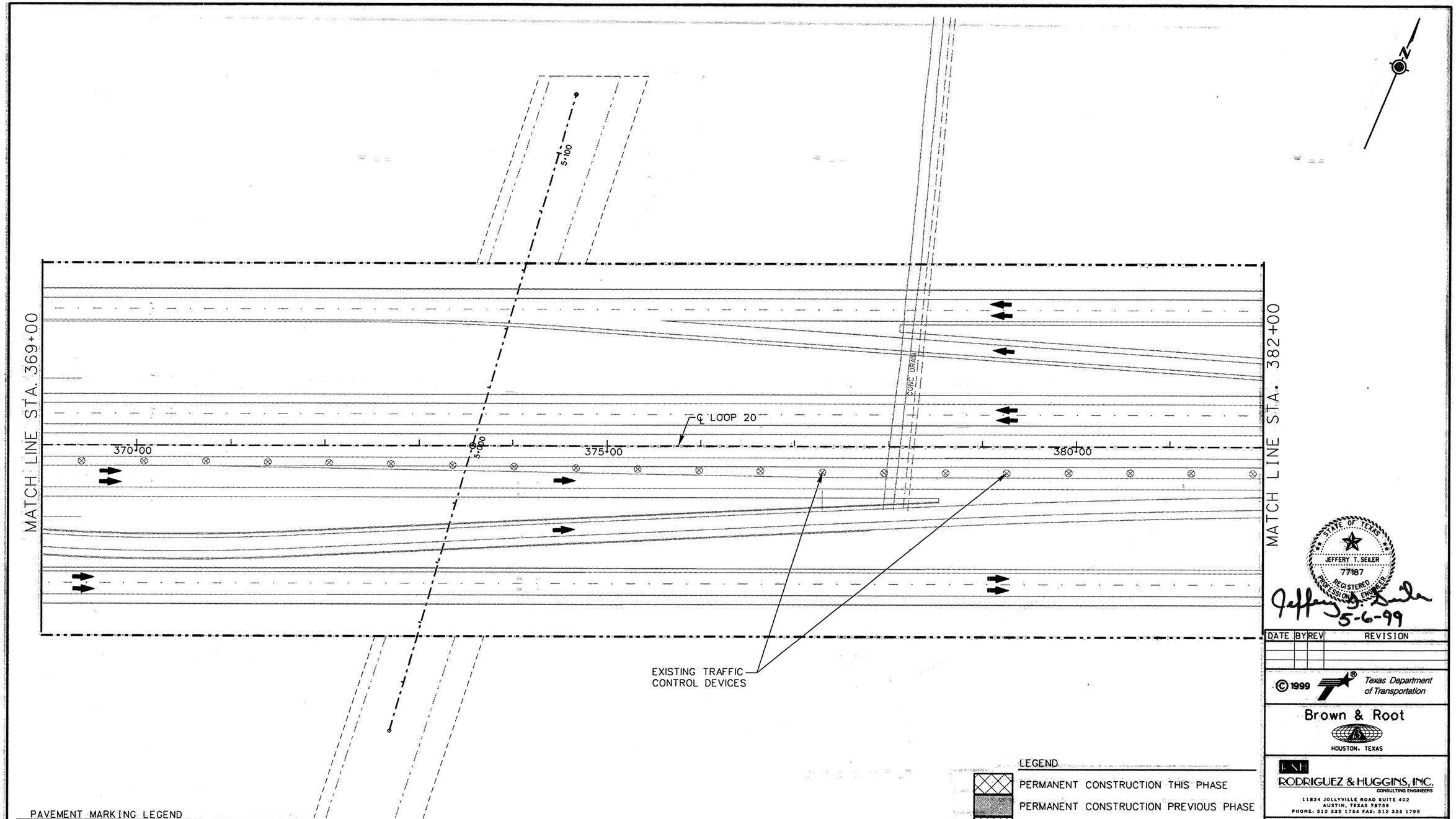

PAVEMENT MARKING LEGEND

A	0662 0501 WRK ZN PAV MRK REMOV (W) (4") (SLD)
B	0662 0502 WRK ZN PAV MRK REMOV (W) (4") (BRK)
C	0662 0507 WRK ZN PAV MRK REMOV (W) (8") (SLD)
D	0662 0511 WRK ZN PAV MRK REMOV (W) (24") (SLD)
E	0662 0523 WRK ZN PAV MRK REMOV (Y) (4") (SLD)
F	0662 0525 WRK ZN PAV MRK REMOV (Y) (4") (DOT)
G	0662 0532 WRK ZN PAV MRK REMOV (Y) (24") (SLD)
H	0662 0549 WRK ZN PAV MRK NON-REMOV (W) (4") (SLD)
I	0662 0553 WRK ZN PAV MRK NON-REMOV (W) (8") (SLD)
J	0662 0557 WRK ZN PAV MRK NON-REMOV (W) (24") (SLD)
K	0662 0569 WRK ZN PAV MRK NON-REMOV (Y) (4") (SLD)

LEGEND

- PERMANENT CONSTRUCTION THIS PHASE
- PERMANENT CONSTRUCTION PREVIOUS PHASE
- TEMPORARY CONSTRUCTION THIS PHASE
- TEMPORARY CONSTRUCTION PREVIOUS PHASE
- PLASTIC DRUMS
- TRAFFIC LANES
- PCTB PORTABLE CONCRETE TRAFFIC BARRIER
- XXX SIGN PLACED IN PREVIOUS PHASE
- RIGHT OF WAY
- P PERMANENT SIGN

STATE OF TEXAS
JEFFERY T. SEILER
77187
REGISTERED PROFESSIONAL ENGINEER

Jeffery T. Seiler
5-6-99

DATE	BY	REV	REVISION

© 1999 Texas Department of Transportation

Brown & Root
HOUSTON, TEXAS

RODRIGUEZ & HUGGINS, INC.
CONSULTING ENGINEERS
11824 JOLLYVILLE ROAD SUITE 402
AUSTIN, TEXAS 78759
PHONE: 512 335 1754 FAX: 512 335 1799

LOOP 20
TRAFFIC CONTROL PLAN PHASE II

0 25 50 100

SHEET 2 OF 8

FED RD DIV NO	STATE PROJECT NO		SHEET NO
6			144
STATE	STATE DIST NO		COUNTY
TEXAS	22		WEBB
CONT	SECT	JOB	HIGHWAY NO
0086	14	023	LOOP 20

80903\Mfg Interchange\mTC302.dgn

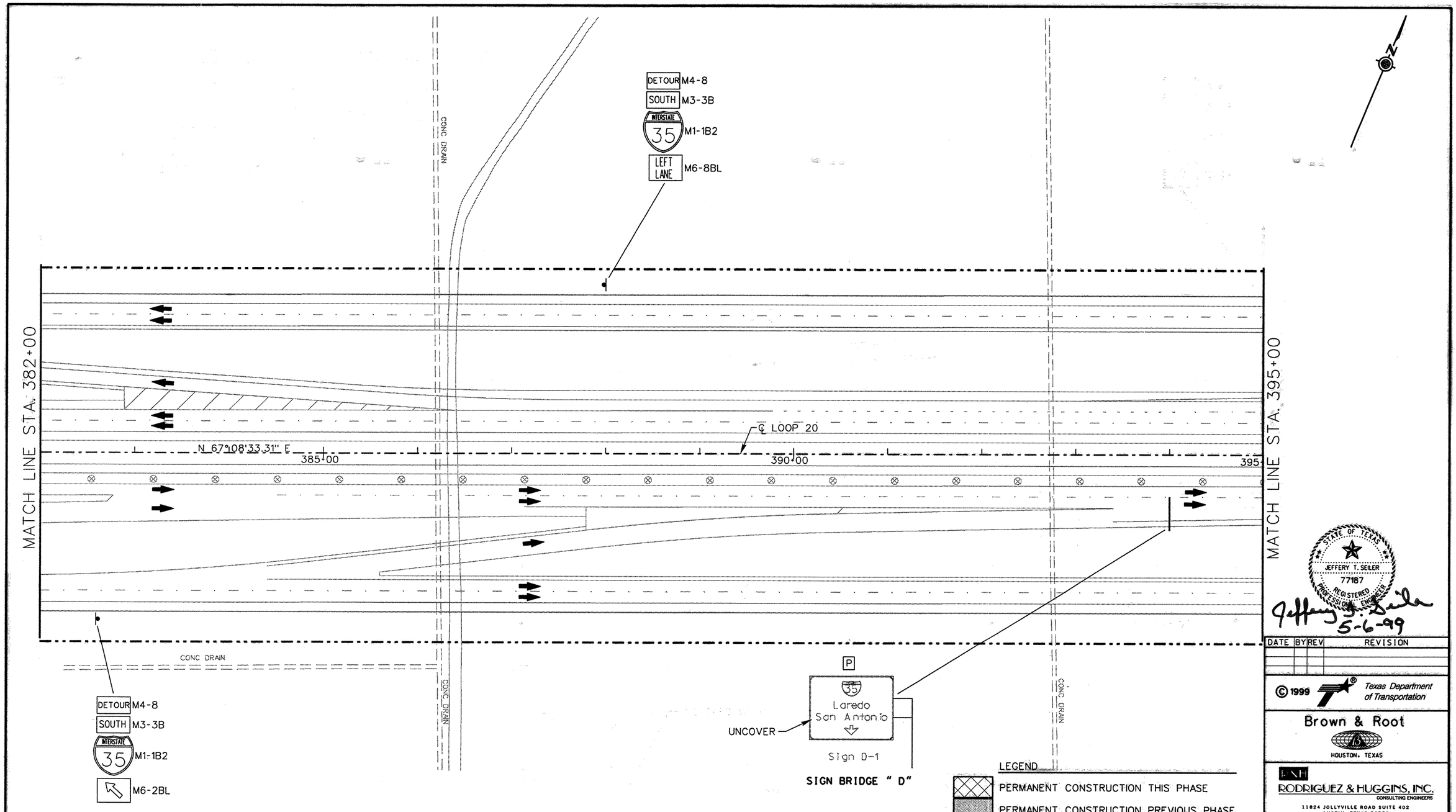

PAVEMENT MARKING LEGEND

(A) 0662 0501 WRK ZN PAV MRK REMOV (W) (4") (SLD)
(B) 0662 0502 WRK ZN PAV MRK REMOV (W) (4") (BRK)
(C) 0662 0507 WRK ZN PAV MRK REMOV (W) (8") (SLD)
(D) 0662 0511 WRK ZN PAV MRK REMOV (W) (24") (SLD)
(E) 0662 0523 WRK ZN PAV MRK REMOV (Y) (4") (SLD)
(F) 0662 0525 WRK ZN PAV MRK REMOV (Y) (4") (DOT)
(G) 0662 0532 WRK ZN PAV MRK REMOV (Y) (24") (SLD)
(H) 0662 0549 WRK ZN PAV MRK NON-REMOV (W) (4") (SLD)
(I) 0662 0553 WRK ZN PAV MRK NON-REMOV (W) (8") (SLD)
(J) 0662 0557 WRK ZN PAV MRK NON-REMOV (W) (24") (SLD)
(K) 0662 0569 WRK ZN PAV MRK NON-REMOV (Y) (4") (SLD)

LEGEND

- PERMANENT CONSTRUCTION THIS PHASE
- PERMANENT CONSTRUCTION PREVIOUS PHASE
- TEMPORARY CONSTRUCTION THIS PHASE
- TEMPORARY CONSTRUCTION PREVIOUS PHASE
- PLASTIC DRUMS
- TRAFFIC LANES
- PCTB PORTABLE CONCRETE TRAFFIC BARRIER
- XXX XXX SIGN PLACED IN PREVIOUS PHASE
- RIGHT OF WAY
- P PERMANENT SIGN

STATE OF TEXAS
JEFFERY T. SEILER
77187
REGISTERED PROFESSIONAL ENGINEER

Jeffery T. Seiler
5-6-99

DATE	BY	REV	REVISION

© 1999 Texas Department of Transportation

Brown & Root
HOUSTON, TEXAS

RNH
RODRIGUEZ & HUGGINS, INC.
CONSULTING ENGINEERS
11824 JOLLYVILLE ROAD SUITE 402
AUSTIN, TEXAS 78759
PHONE: 512 335 1754 FAX: 512 335 1799

LOOP 20
TRAFFIC CONTROL PLAN PHASE II

0 25 50 100

SHEET 3 OF 8

FED RD DIV NO	STATE PROJECT NO		SHEET NO
6			145
STATE	STATE DIST NO		COUNTY
TEXAS	22		WEBB
CONT	SECT	JOB	HIGHWAY NO
0086	14	023	LOOP 20

80903\Mlo Interchange\mlTC303.dgn

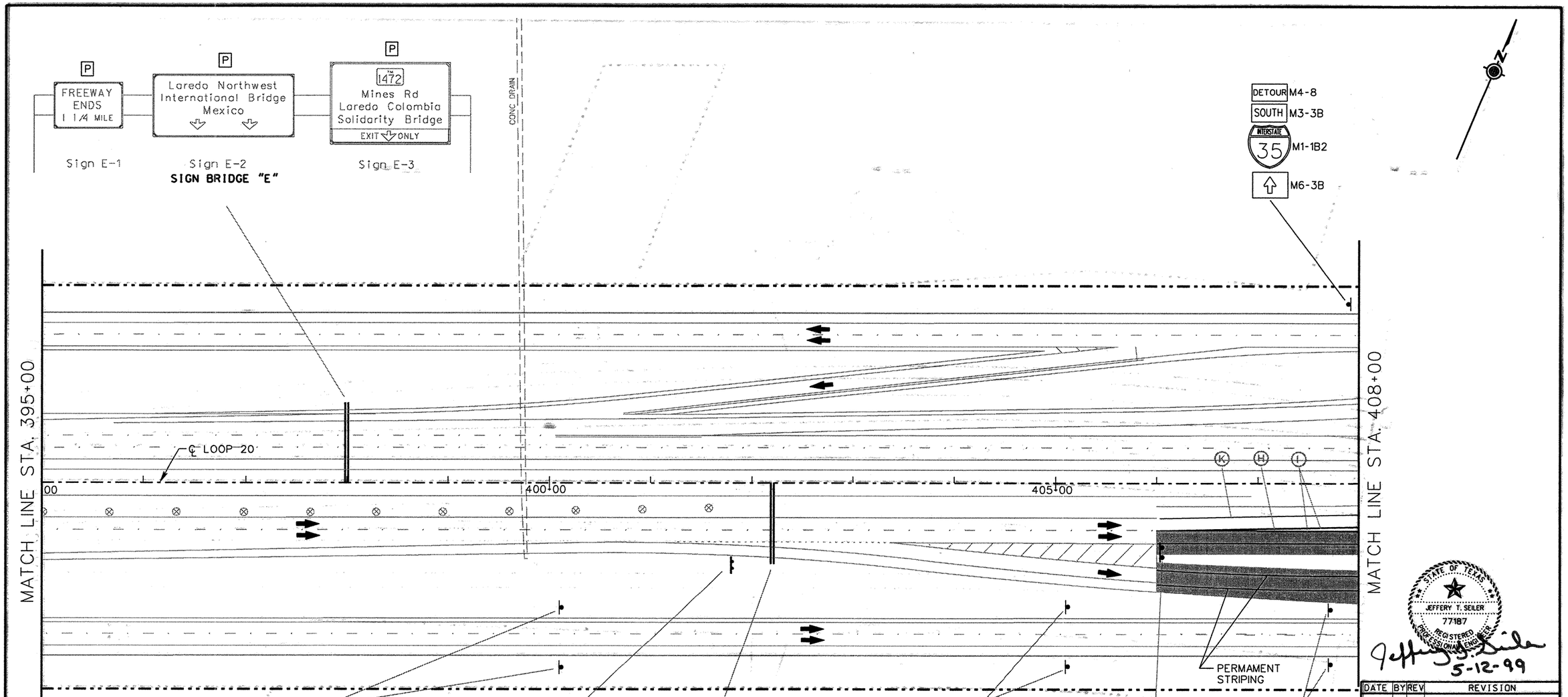

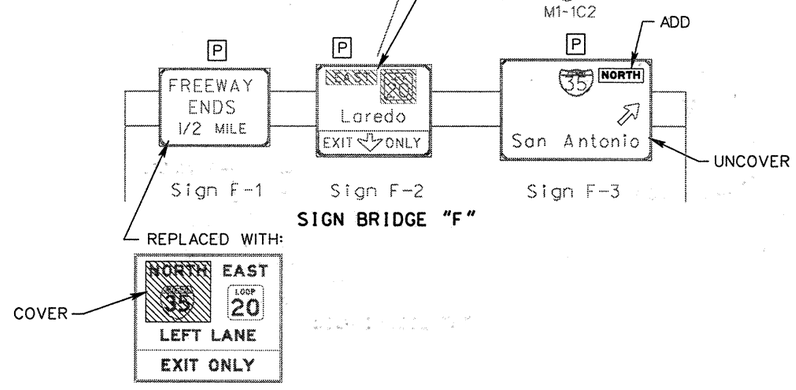

PAVEMENT MARKING LEGEND

(A)	0662	0501	WRK ZN PAV MRK	REMOV	(W)	(4")	(SLD)
(B)	0662	0502	WRK ZN PAV MRK	REMOV	(W)	(4")	(BRK)
(C)	0662	0507	WRK ZN PAV MRK	REMOV	(W)	(8")	(SLD)
(D)	0662	0511	WRK ZN PAV MRK	REMOV	(W)	(24")	(SLD)
(E)	0662	0523	WRK ZN PAV MRK	REMOV	(Y)	(4")	(SLD)
(F)	0662	0525	WRK ZN PAV MRK	REMOV	(Y)	(4")	(DOT)
(G)	0662	0532	WRK ZN PAV MRK	REMOV	(Y)	(24")	(SLD)
(H)	0662	0549	WRK ZN PAV MRK	NON-REMOV	(W)	(4")	(SLD)
(I)	0662	0553	WRK ZN PAV MRK	NON-REMOV	(W)	(8")	(SLD)
(J)	0662	0557	WRK ZN PAV MRK	NON-REMOV	(W)	(24")	(SLD)
(K)	0662	0569	WRK ZN PAV MRK	NON-REMOV	(Y)	(4")	(SLD)

LEGEND

- PERMANENT CONSTRUCTION THIS PHASE
- PERMANENT CONSTRUCTION PREVIOUS PHASE
- TEMPORARY CONSTRUCTION THIS PHASE
- TEMPORARY CONSTRUCTION PREVIOUS PHASE
- PLASTIC DRUMS
- TRAFFIC LANES
- PCTB PORTABLE CONCRETE TRAFFIC BARRIER
- XXX SIGN PLACED IN PREVIOUS PHASE
- RIGHT OF WAY
- P PERMANENT SIGN

STATE OF TEXAS
JEFFERY T. SEILER
77187
REGISTERED PROFESSIONAL ENGINEER
5-12-99

DATE	BY	REV	REVISION

© 1999 Texas Department of Transportation

Brown & Root
HOUSTON, TEXAS

RODRIGUEZ & HUGGINS, INC.
CONSULTING ENGINEERS
11824 JOLLYVILLE ROAD SUITE 402
AUSTIN, TEXAS 78759
PHONE: 512 335 1754 FAX: 512 335 1799

LOOP 20

TRAFFIC CONTROL PLAN PHASE II

0 25 50 100

SHEET 4 OF 8

FED RD DIV NO	STATE PROJECT NO		SHEET NO
6			146
STATE	STATE DIST NO	COUNTY	
TEXAS	22	WEBB	
CONT	SECT	JOB	HIGHWAY NO
0086	14	023	LOOP 20

80903.XMip, Interchange\mATC304.dgn

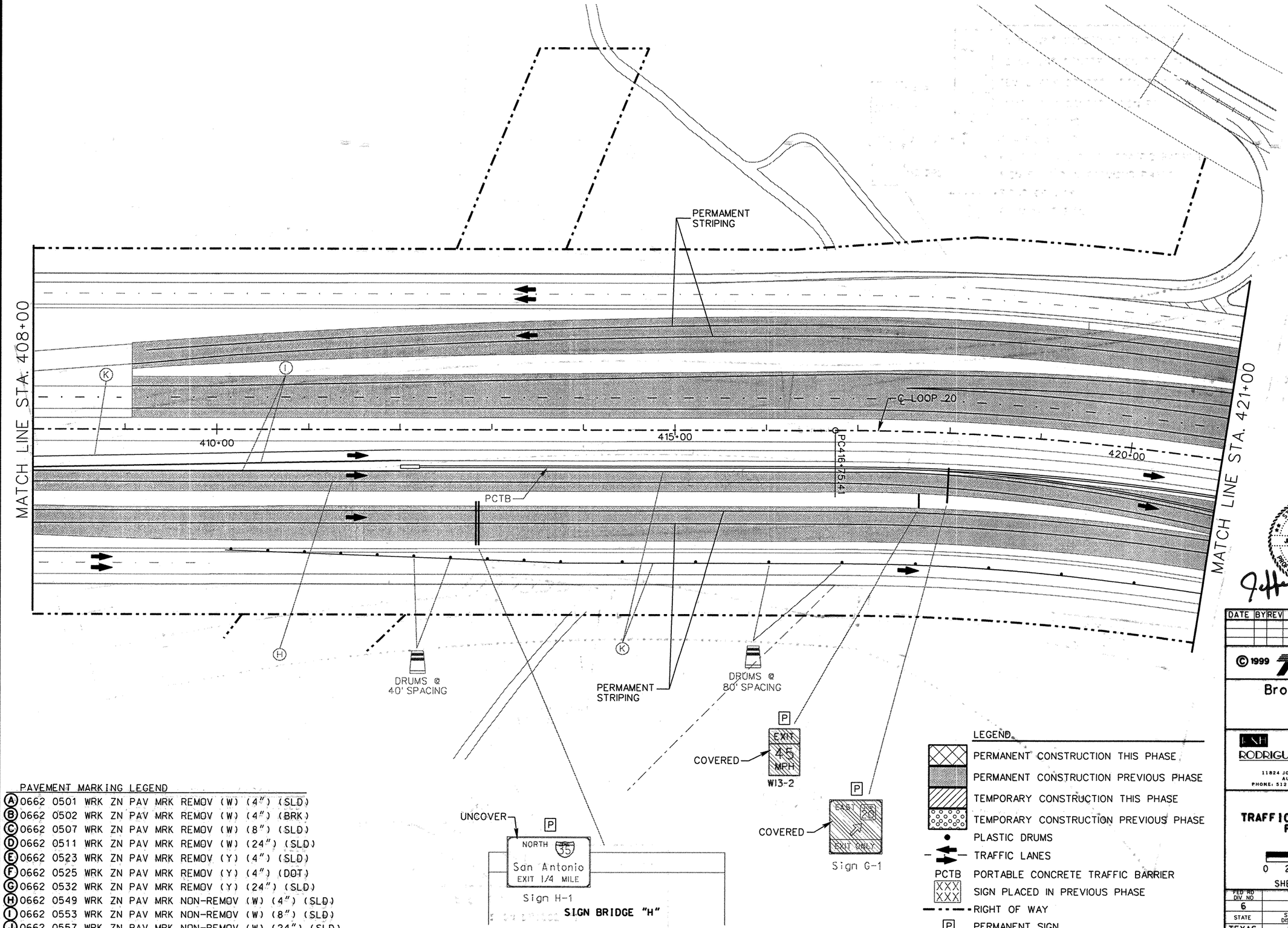

PAVEMENT MARKING LEGEND

(A) 0662 0501 WRK ZN PAV MRK REMOV (W) (4") (SLD)
(B) 0662 0502 WRK ZN PAV MRK REMOV (W) (4") (BRK)
(C) 0662 0507 WRK ZN PAV MRK REMOV (W) (8") (SLD)
(D) 0662 0511 WRK ZN PAV MRK REMOV (W) (24") (SLD)
(E) 0662 0523 WRK ZN PAV MRK REMOV (Y) (4") (SLD)
(F) 0662 0525 WRK ZN PAV MRK REMOV (Y) (4") (DOT)
(G) 0662 0532 WRK ZN PAV MRK REMOV (Y) (24") (SLD)
(H) 0662 0549 WRK ZN PAV MRK NON-REMOV (W) (4") (SLD)
(I) 0662 0553 WRK ZN PAV MRK NON-REMOV (W) (8") (SLD)
(J) 0662 0557 WRK ZN PAV MRK NON-REMOV (W) (24") (SLD)
(K) 0662 0569 WRK ZN PAV MRK NON-REMOV (Y) (4") (SLD)

80803\Mlo_Interchange\mltC305.dgn

STATE OF TEXAS
JEFFERY T. SEILER
77187
REGISTERED PROFESSIONAL ENGINEER

Jeffery T. Seiler
5-6-99

DATE	BY	REV	REVISION

© 1999 Texas Department of Transportation

Brown & Root
HOUSTON, TEXAS

RODRIGUEZ & HUGGINS, INC.
CONSULTING ENGINEERS
11824 JOLLYVILLE ROAD SUITE 402
AUSTIN, TEXAS 78759
PHONE: 512 335 1754 FAX: 512 335 1799

LOOP 20
TRAFFIC CONTROL PLAN PHASE II

0 25 50 100

SHEET 5 OF 8

FED RD DIV NO	STATE PROJECT NO		SHEET NO
6			147
STATE	STATE DIST NO		COUNTY
TEXAS	22		WEBB
CONT	SECT	JOB	HIGHWAY NO
0086	14	023	LOOP 20

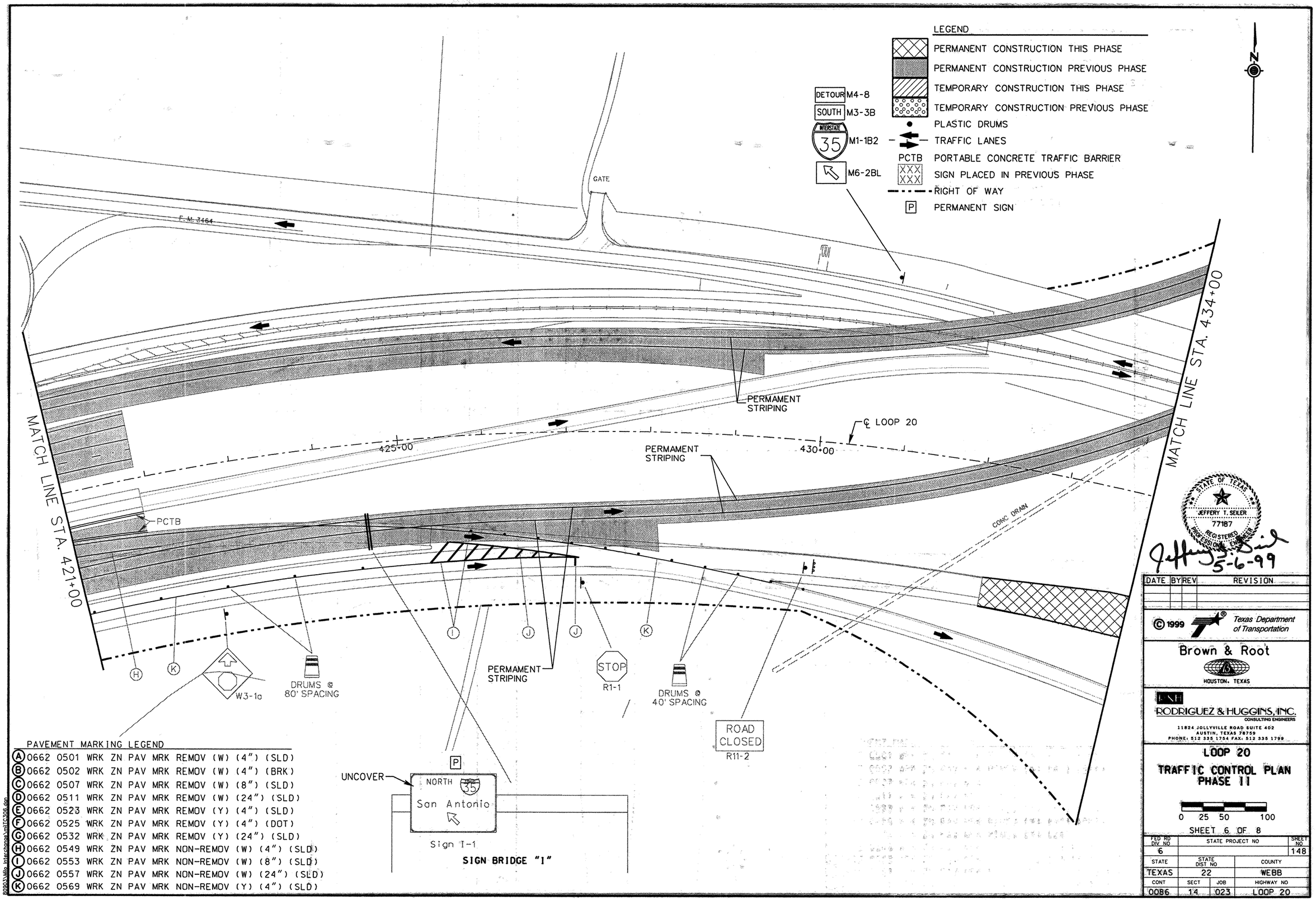

PAVEMENT MARKING LEGEND

(A)	0662	0501	WRK ZN PAV MRK REMOV	(W)	(4")	(SLD)
(B)	0662	0502	WRK ZN PAV MRK REMOV	(W)	(4")	(BRK)
(C)	0662	0507	WRK ZN PAV MRK REMOV	(W)	(8")	(SLD)
(D)	0662	0511	WRK ZN PAV MRK REMOV	(W)	(24")	(SLD)
(E)	0662	0523	WRK ZN PAV MRK REMOV	(Y)	(4")	(SLD)
(F)	0662	0525	WRK ZN PAV MRK REMOV	(Y)	(4")	(DOT)
(G)	0662	0532	WRK ZN PAV MRK REMOV	(Y)	(24")	(SLD)
(H)	0662	0549	WRK ZN PAV MRK NON-REMOV	(W)	(4")	(SLD)
(I)	0662	0553	WRK ZN PAV MRK NON-REMOV	(W)	(8")	(SLD)
(J)	0662	0557	WRK ZN PAV MRK NON-REMOV	(W)	(24")	(SLD)
(K)	0662	0569	WRK ZN PAV MRK NON-REMOV	(Y)	(4")	(SLD)

80303\Wilo_Interchange\milTC306.dgn

STATE OF TEXAS
JEFFERY T. SEILER
77187
REGISTERED PROFESSIONAL ENGINEER

Jeffery T. Seiler
5-6-99

DATE	BY	REV	REVISION

© 1999 Texas Department of Transportation

Brown & Root
HOUSTON, TEXAS

RODRIGUEZ & HUGGINS, INC.
CONSULTING ENGINEERS
11824 JOLLYVILLE ROAD SUITE 402
AUSTIN, TEXAS 78759
PHONE: 512 335 1764 FAX: 512 335 1799

LOOP 20
TRAFFIC CONTROL PLAN PHASE II

0 25 50 100

SHEET 6 OF 8

FED RD DIV NO	STATE PROJECT NO		SHEET NO
6			148
STATE	STATE DIST NO		COUNTY
TEXAS	22		WEBB
CONT	SECT	JOB	HIGHWAY NO
0086	14	023	LOOP 20

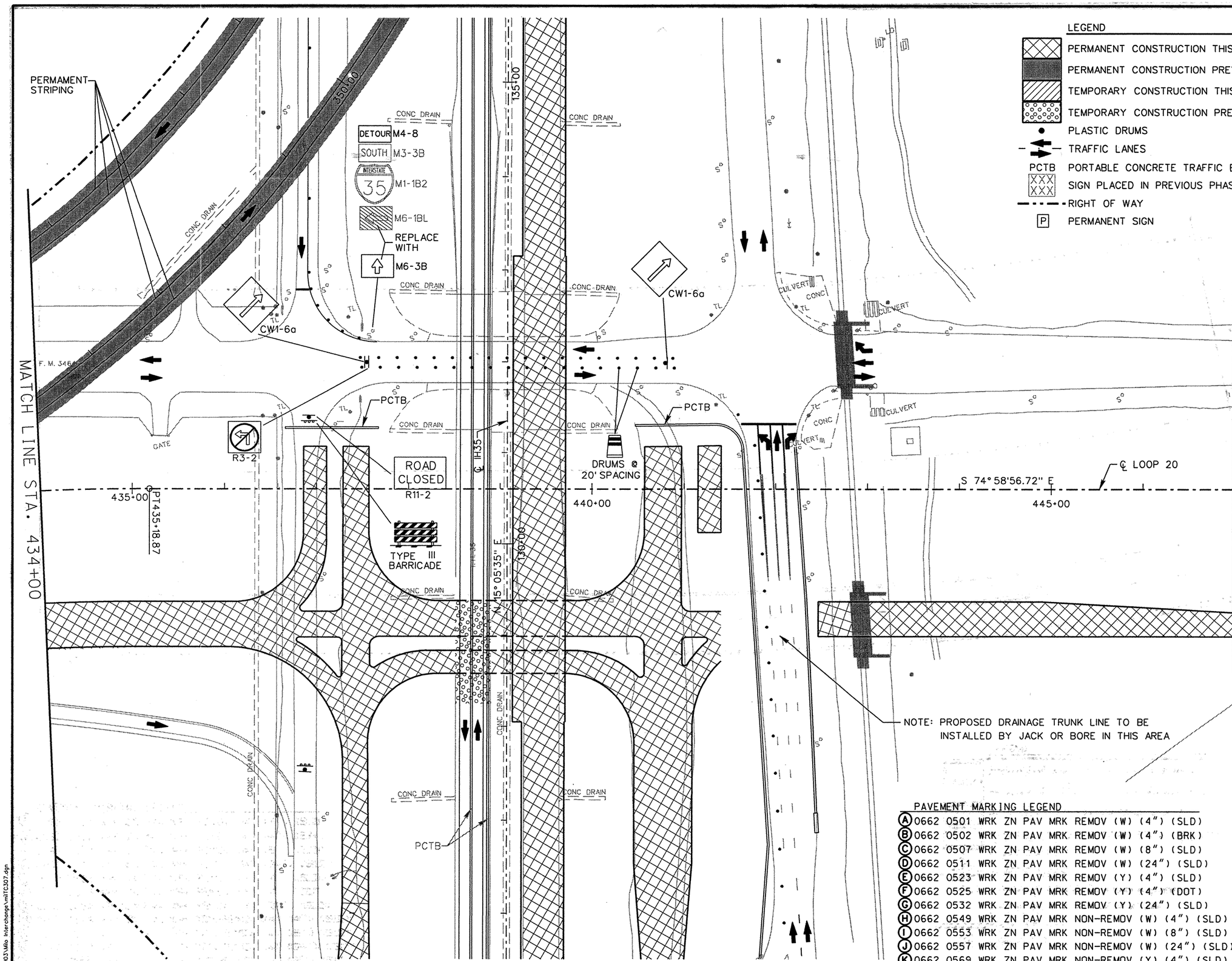

LEGEND

- PERMANENT CONSTRUCTION THIS PHASE
- PERMANENT CONSTRUCTION PREVIOUS PHASE
- TEMPORARY CONSTRUCTION THIS PHASE
- TEMPORARY CONSTRUCTION PREVIOUS PHASE
- PLASTIC DRUMS
- TRAFFIC LANES
- PCTB PORTABLE CONCRETE TRAFFIC BARRIER
- SIGN PLACED IN PREVIOUS PHASE
- RIGHT OF WAY
- P PERMANENT SIGN

PAVEMENT MARKING LEGEND

(A) 0662 0501 WRK ZN PAV MRK REMOV (W) (4") (SLD)
(B) 0662 0502 WRK ZN PAV MRK REMOV (W) (4") (BRK)
(C) 0662 0507 WRK ZN PAV MRK REMOV (W) (8") (SLD)
(D) 0662 0511 WRK ZN PAV MRK REMOV (W) (24") (SLD)
(E) 0662 0523 WRK ZN PAV MRK REMOV (Y) (4") (SLD)
(F) 0662 0525 WRK ZN PAV MRK REMOV (Y) (4") (DOT)
(G) 0662 0532 WRK ZN PAV MRK REMOV (Y) (24") (SLD)
(H) 0662 0549 WRK ZN PAV MRK NON-REMOV (W) (4") (SLD)
(I) 0662 0553 WRK ZN PAV MRK NON-REMOV (W) (8") (SLD)
(J) 0662 0557 WRK ZN PAV MRK NON-REMOV (W) (24") (SLD)
(K) 0662 0569 WRK ZN PAV MRK NON-REMOV (Y) (4") (SLD)

STATE OF TEXAS
JEFFERY T. SEILER
77187
REGISTERED PROFESSIONAL ENGINEER
5-13-99

DATE	BY	REV	REVISION

© 1999 Texas Department of Transportation

Brown & Root
HOUSTON, TEXAS

RODRIGUEZ & HUGGINS, INC.
CONSULTING ENGINEERS
11824 JOLLYVILLE ROAD SUITE 402
AUSTIN, TEXAS 78759
PHONE: 512 335 1754 FAX: 512 335 1799

LOOP 20

TRAFFIC CONTROL PLAN PHASE II

0 25 50 100

SHEET 7 OF 8

FED RD DIV NO	STATE PROJECT NO		SHEET NO
6			149
STATE	STATE DIST NO		COUNTY
TEXAS	22		WEBB
CONT	SECT	JOB	HIGHWAY NO
0086	14	023	LOOP 20

80903\Mlo Interchange\vmTC307.dgn

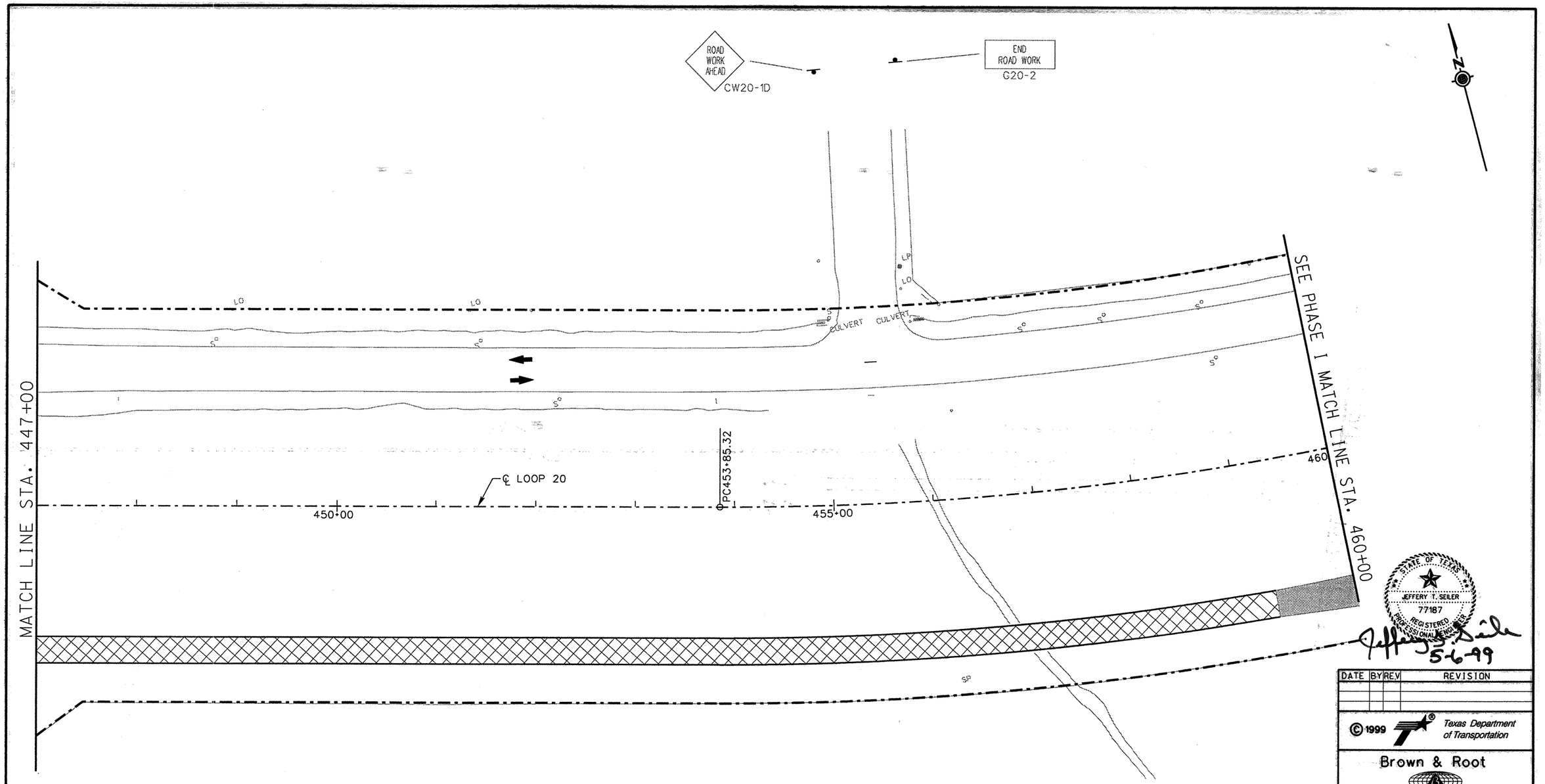

PAVEMENT MARKING LEGEND

(A) 0662 0501 WRK ZN PAV MRK REMOV (W) (4") (SLD)
(B) 0662 0502 WRK ZN PAV MRK REMOV (W) (4") (BRK)
(C) 0662 0507 WRK ZN PAV MRK REMOV (W) (8") (SLD)
(D) 0662 0511 WRK ZN PAV MRK REMOV (W) (24") (SLD)
(E) 0662 0523 WRK ZN PAV MRK REMOV (Y) (4") (SLD)
(F) 0662 0525 WRK ZN PAV MRK REMOV (Y) (4") (DOT)
(G) 0662 0532 WRK ZN PAV MRK REMOV (Y) (24") (SLD)
(H) 0662 0549 WRK ZN PAV MRK NON-REMOV (W) (4") (SLD)
(I) 0662 0553 WRK ZN PAV MRK NON-REMOV (W) (8") (SLD)
(J) 0662 0557 WRK ZN PAV MRK NON-REMOV (W) (24") (SLD)
(K) 0662 0569 WRK ZN PAV MRK NON-REMOV (Y) (4") (SLD)

LEGEND

- PERMANENT CONSTRUCTION THIS PHASE
- PERMANENT CONSTRUCTION PREVIOUS PHASE
- TEMPORARY CONSTRUCTION THIS PHASE
- TEMPORARY CONSTRUCTION PREVIOUS PHASE
- PLASTIC DRUMS
- TRAFFIC LANES
- PCTB PORTABLE CONCRETE TRAFFIC BARRIER
- SIGN PLACED IN PREVIOUS PHASE
- RIGHT OF WAY
- P PERMANENT SIGN

STATE OF TEXAS
JEFFERY T. SEILER
77187
REGISTERED PROFESSIONAL ENGINEER
Jeffery T. Seiler
5-6-99

DATE	BY	REV	REVISION

© 1999 Texas Department of Transportation

Brown & Root
HOUSTON, TEXAS

RHI
RODRIGUEZ & HUGGINS, INC.
CONSULTING ENGINEERS
11824 JOLLYVILLE ROAD SUITE 402
AUSTIN, TEXAS 78759
PHONE: 512 335 1754 FAX: 512 335 1799

LOOP 20

TRAFFIC CONTROL PLAN
PHASE II

0 25 50 100

SHEET 8 OF 8

FED RD DIV NO	STATE PROJECT NO		SHEET NO
6			150
STATE	STATE DIST NO		COUNTY
TEXAS	22		WEBB
CONT	SECT	JOB	HIGHWAY NO
0086	14	023	LOOP 20

80903\Mile Interchange\vmiTC308.dgn

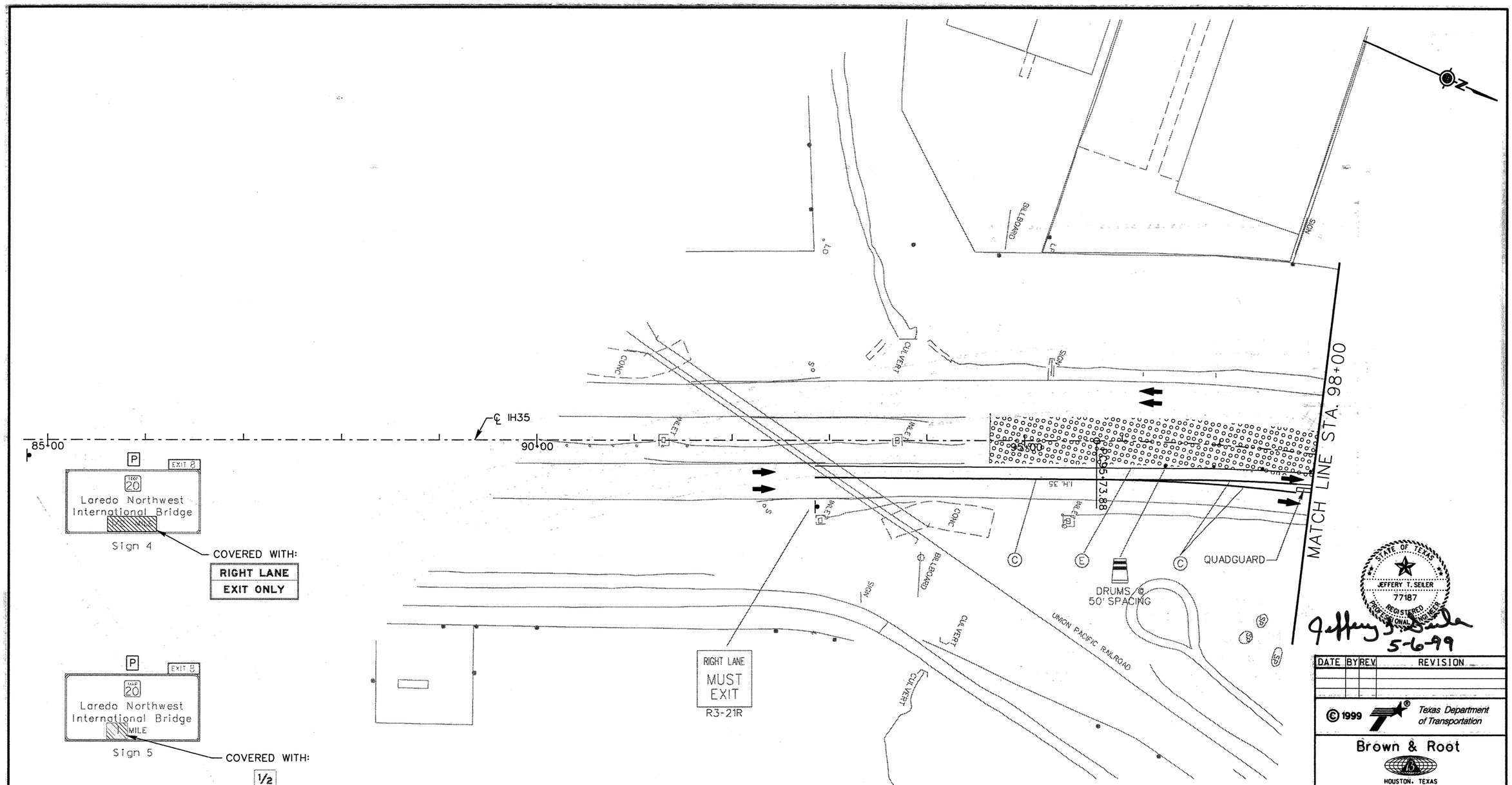

PAVEMENT MARKING LEGEND

(A) 0662 0501 WRK ZN PAV MRK REMOV (W) (4") (SLD)
(B) 0662 0502 WRK ZN PAV MRK REMOV (W) (4") (BRK)
(C) 0662 0507 WRK ZN PAV MRK REMOV (W) (8") (SLD)
(D) 0662 0511 WRK ZN PAV MRK REMOV (W) (24") (SLD)
(E) 0662 0523 WRK ZN PAV MRK REMOV (Y) (4") (SLD)
(F) 0662 0525 WRK ZN PAV MRK REMOV (Y) (4") (DOT)
(G) 0662 0532 WRK ZN PAV MRK REMOV (Y) (24") (SLD)
(H) 0662 0549 WRK ZN PAV MRK NON-REMOV (W) (4") (SLD)
(I) 0662 0553 WRK ZN PAV MRK NON-REMOV (W) (8") (SLD)
(J) 0662 0557 WRK ZN PAV MRK NON-REMOV (W) (24") (SLD)
(K) 0662 0569 WRK ZN PAV MRK NON-REMOV (Y) (4") (SLD)

LEGEND

- PERMANENT CONSTRUCTION THIS PHASE
- PERMANENT CONSTRUCTION PREVIOUS PHASE
- TEMPORARY CONSTRUCTION THIS PHASE
- TEMPORARY CONSTRUCTION PREVIOUS PHASE
- PLASTIC DRUMS
- TRAFFIC LANES
- PCTB — PORTABLE CONCRETE TRAFFIC BARRIER
- SIGN PLACED IN PREVIOUS PHASE
- RIGHT OF WAY
- P — PERMANENT SIGN

STATE OF TEXAS
JEFFERY T. SEILER
77187
REGISTERED PROFESSIONAL ENGINEER

Jeffery T. Seiler
5-6-99

DATE	BY	REV.	REVISION

© 1999 Texas Department of Transportation

Brown & Root
HOUSTON, TEXAS

RODRIGUEZ & HUGGINS, INC.
CONSULTING ENGINEERS
11824 JOLLYVILLE ROAD SUITE 402
AUSTIN, TEXAS 78759
PHONE: 512 335 1754 FAX: 512 335 1799

IH 35
TRAFFIC CONTROL PLAN
PHASE II

0 25 50 100

SHEET 1 OF 9

FED RD DIV NO	STATE PROJECT NO		SHEET NO
6			151
STATE	STATE DIST NO	COUNTY	
TEXAS	22	WEBB	
CONT	SECT	JOB	HIGHWAY NO
0018	05	057	LOOP 20

80903\Misc. Interchange\mslTC913.dgn

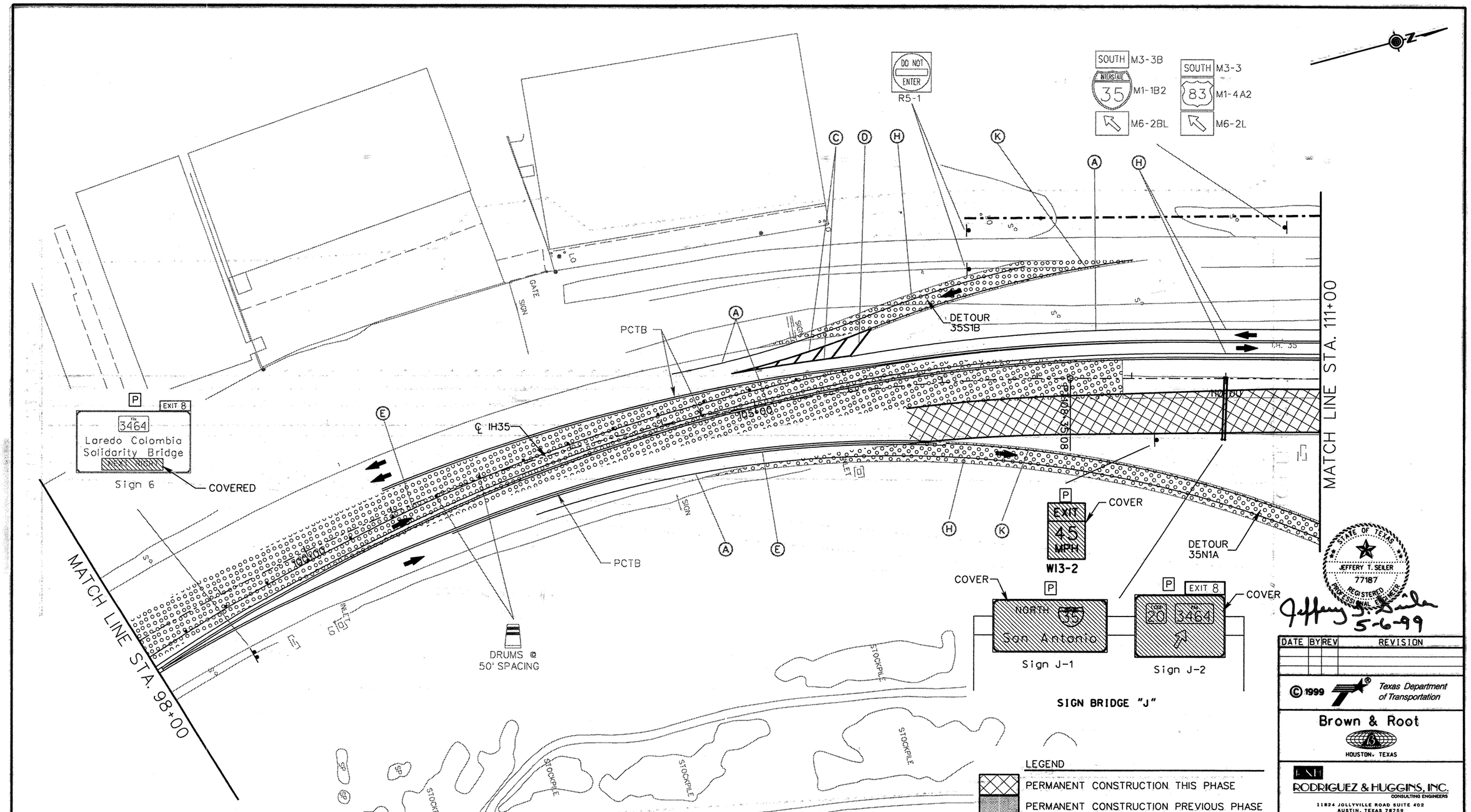

PAVEMENT MARKING LEGEND

A	0662	0501	WRK	ZN	PAV	MRK	REMOV	(W)	(4") (SLD)
B	0662	0502	WRK	ZN	PAV	MRK	REMOV	(W)	(4") (BRK)
C	0662	0507	WRK	ZN	PAV	MRK	REMOV	(W)	(8") (SLD)
D	0662	0511	WRK	ZN	PAV	MRK	REMOV	(W)	(24") (SLD)
E	0662	0523	WRK	ZN	PAV	MRK	REMOV	(Y)	(4") (SLD)
F	0662	0525	WRK	ZN	PAV	MRK	REMOV	(Y)	(4") (DOT)
G	0662	0532	WRK	ZN	PAV	MRK	REMOV	(Y)	(24") (SLD)
H	0662	0549	WRK	ZN	PAV	MRK	NON-REMOV	(W)	(4") (SLD)
I	0662	0553	WRK	ZN	PAV	MRK	NON-REMOV	(W)	(8") (SLD)
J	0662	0557	WRK	ZN	PAV	MRK	NON-REMOV	(W)	(24") (SLD)
K	0662	0569	WRK	ZN	PAV	MRK	NON-REMOV	(Y)	(4") (SLD)

LEGEND

- PERMANENT CONSTRUCTION THIS PHASE
- PERMANENT CONSTRUCTION PREVIOUS PHASE
- TEMPORARY CONSTRUCTION THIS PHASE
- TEMPORARY CONSTRUCTION PREVIOUS PHASE
- PLASTIC DRUMS
- TRAFFIC LANES
- PCTB PORTABLE CONCRETE TRAFFIC BARRIER
- SIGN PLACED IN PREVIOUS PHASE
- RIGHT OF WAY
- P PERMANENT SIGN

STATE OF TEXAS
JEFFERY T. SEILER
77187
REGISTERED PROFESSIONAL ENGINEER

Jeffery T. Seiler 5-6-99

DATE	BY	REV	REVISION

© 1999 Texas Department of Transportation

Brown & Root
HOUSTON, TEXAS

RODRIGUEZ & HUGGINS, INC.
CONSULTING ENGINEERS
11824 JOLLYVILLE ROAD SUITE 402
AUSTIN, TEXAS 78759
PHONE: 512 335 1754 FAX: 512 335 1799

IH 35
TRAFFIC CONTROL PLAN
PHASE II

0 25 50 100

SHEET 2 OF 9

FED RD DIV NO	STATE PROJECT NO		SHEET NO
6			152
STATE	STATE DIST NO		COUNTY
TEXAS	22		WEBB
CONT	SECT	JOB	HIGHWAY NO
0018	05	057	LOOP 20

80903\Milo Interchange\milTC314.dgn

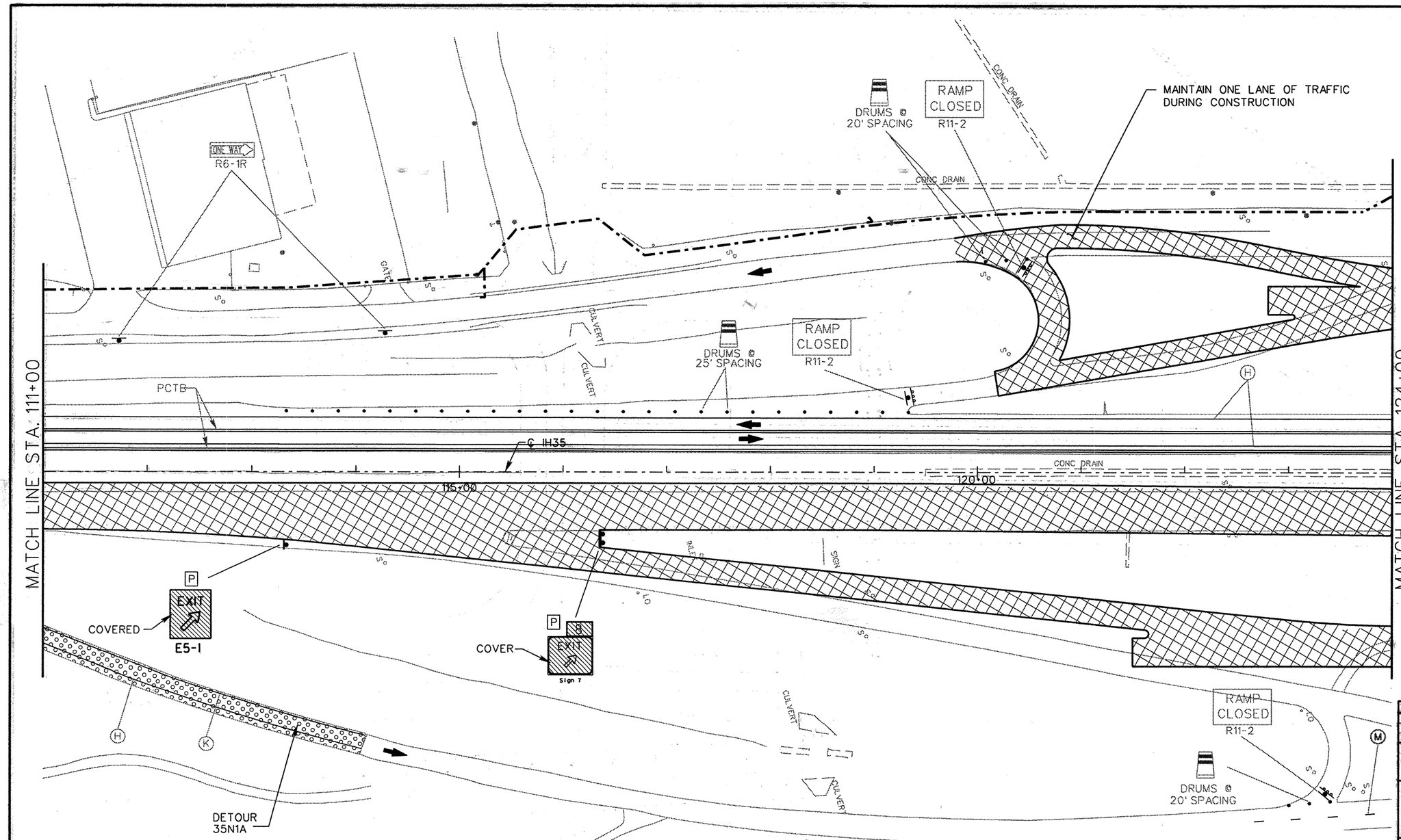

PAVEMENT MARKING LEGEND

(A) 0662 0501 WRK ZN PAV MRK REMOV (W) (4") (SLD)
(B) 0662 0502 WRK ZN PAV MRK REMOV (W) (4") (BRK)
(C) 0662 0507 WRK ZN PAV MRK REMOV (W) (8") (SLD)
(D) 0662 0511 WRK ZN PAV MRK REMOV (W) (24") (SLD)
(E) 0662 0523 WRK ZN PAV MRK REMOV (Y) (4") (SLD)
(F) 0662 0525 WRK ZN PAV MRK REMOV (Y) (4") (DOT)
(G) 0662 0532 WRK ZN PAV MRK REMOV (Y) (24") (SLD)
(H) 0662 0549 WRK ZN PAV MRK NON-REMOV (W) (4") (SLD)
(I) 0662 0553 WRK ZN PAV MRK NON-REMOV (W) (8") (SLD)
(J) 0662 0557 WRK ZN PAV MRK NON-REMOV (W) (24") (SLD)
(K) 0662 0569 WRK ZN PAV MRK NON-REMOV (Y) (4") (SLD)
(M) 0662 0550 WRK ZN PAV MRK NON-REMOV (W) (4") (BRK)

LEGEND

- PERMANENT CONSTRUCTION THIS PHASE
- PERMANENT CONSTRUCTION PREVIOUS PHASE
- TEMPORARY CONSTRUCTION THIS PHASE
- TEMPORARY CONSTRUCTION PREVIOUS PHASE
- PLASTIC DRUMS
- TRAFFIC LANES
- PCTB — PORTABLE CONCRETE TRAFFIC BARRIER
- XXX XXX — SIGN PLACED IN PREVIOUS PHASE
- RIGHT OF WAY
- P — PERMANENT SIGN

STATE OF TEXAS
JEFFERY T. SEILER
77187
REGISTERED PROFESSIONAL ENGINEER

Jeffery T. Seiler 5-13-99

DATE	BY	REV	REVISION

© 1999 Texas Department of Transportation

Brown & Root
HOUSTON, TEXAS

RHI
RODRIGUEZ & HUGGINS, INC.
CONSULTING ENGINEERS
11824 JOLLYVILLE ROAD SUITE 402
AUSTIN, TEXAS 78759
PHONE: 512 335 1754 FAX: 512 335 1799

IH 35
TRAFFIC CONTROL PLAN
PHASE II

0 25 50 100

SHEET 3 OF 9

FED RD DIV NO	STATE PROJECT NO		SHEET NO
6			153
STATE	STATE DIST NO		COUNTY
TEXAS	22		WEBB
CONT	SECT	JOB	HIGHWAY NO
0018	05	057	LOOP 20

80903\Mlo_Interchange\mltc315.dgn

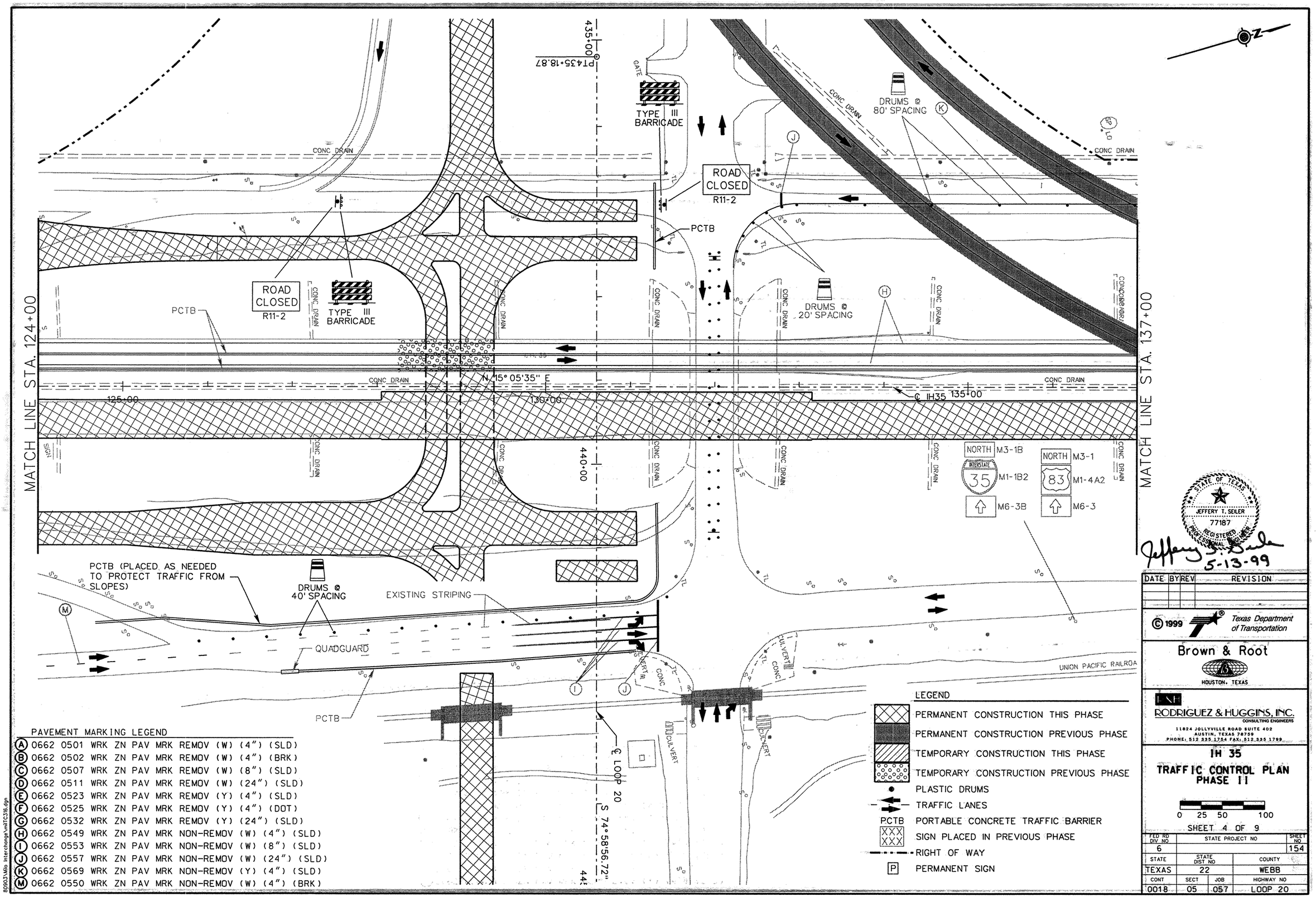

PAVEMENT MARKING LEGEND

(A) 0662 0501 WRK ZN PAV MRK REMOV (W) (4") (SLD)
(B) 0662 0502 WRK ZN PAV MRK REMOV (W) (4") (BRK)
(C) 0662 0507 WRK ZN PAV MRK REMOV (W) (8") (SLD)
(D) 0662 0511 WRK ZN PAV MRK REMOV (W) (24") (SLD)
(E) 0662 0523 WRK ZN PAV MRK REMOV (Y) (4") (SLD)
(F) 0662 0525 WRK ZN PAV MRK REMOV (Y) (4") (DOT)
(G) 0662 0532 WRK ZN PAV MRK REMOV (Y) (24") (SLD)
(H) 0662 0549 WRK ZN PAV MRK NON-REMOV (W) (4") (SLD)
(I) 0662 0553 WRK ZN PAV MRK NON-REMOV (W) (8") (SLD)
(J) 0662 0557 WRK ZN PAV MRK NON-REMOV (W) (24") (SLD)
(K) 0662 0569 WRK ZN PAV MRK NON-REMOV (Y) (4") (SLD)
(M) 0662 0550 WRK ZN PAV MRK NON-REMOV (W) (4") (BRK)

LEGEND

- PERMANENT CONSTRUCTION THIS PHASE
- PERMANENT CONSTRUCTION PREVIOUS PHASE
- TEMPORARY CONSTRUCTION THIS PHASE
- TEMPORARY CONSTRUCTION PREVIOUS PHASE
- PLASTIC DRUMS
- TRAFFIC LANES
- PCTB — PORTABLE CONCRETE TRAFFIC BARRIER
- SIGN PLACED IN PREVIOUS PHASE
- RIGHT OF WAY
- (P) PERMANENT SIGN

STATE OF TEXAS
JEFFERY T. SEILER
77187
REGISTERED PROFESSIONAL ENGINEER

Jeffery T. Seiler
5-13-99

DATE	BY	REV	REVISION

© 1999 Texas Department of Transportation

Brown & Root
HOUSTON, TEXAS

RODRIGUEZ & HUGGINS, INC.
CONSULTING ENGINEERS
11824 JOLLYVILLE ROAD SUITE 402
AUSTIN, TEXAS 78759
PHONE: 512 335 1754 FAX: 512 335 1799

IH 35
TRAFFIC CONTROL PLAN PHASE II

0 25 50 100

SHEET 4 OF 9

FED RD DIV NO	STATE PROJECT NO	SHEET NO
6		154

STATE	STATE DIST NO	COUNTY
TEXAS	22	WEBB

CONT	SECT	JOB	HIGHWAY NO
0018	05	057	LOOP 20

80903\Milo Interchange\milTC316.dgn

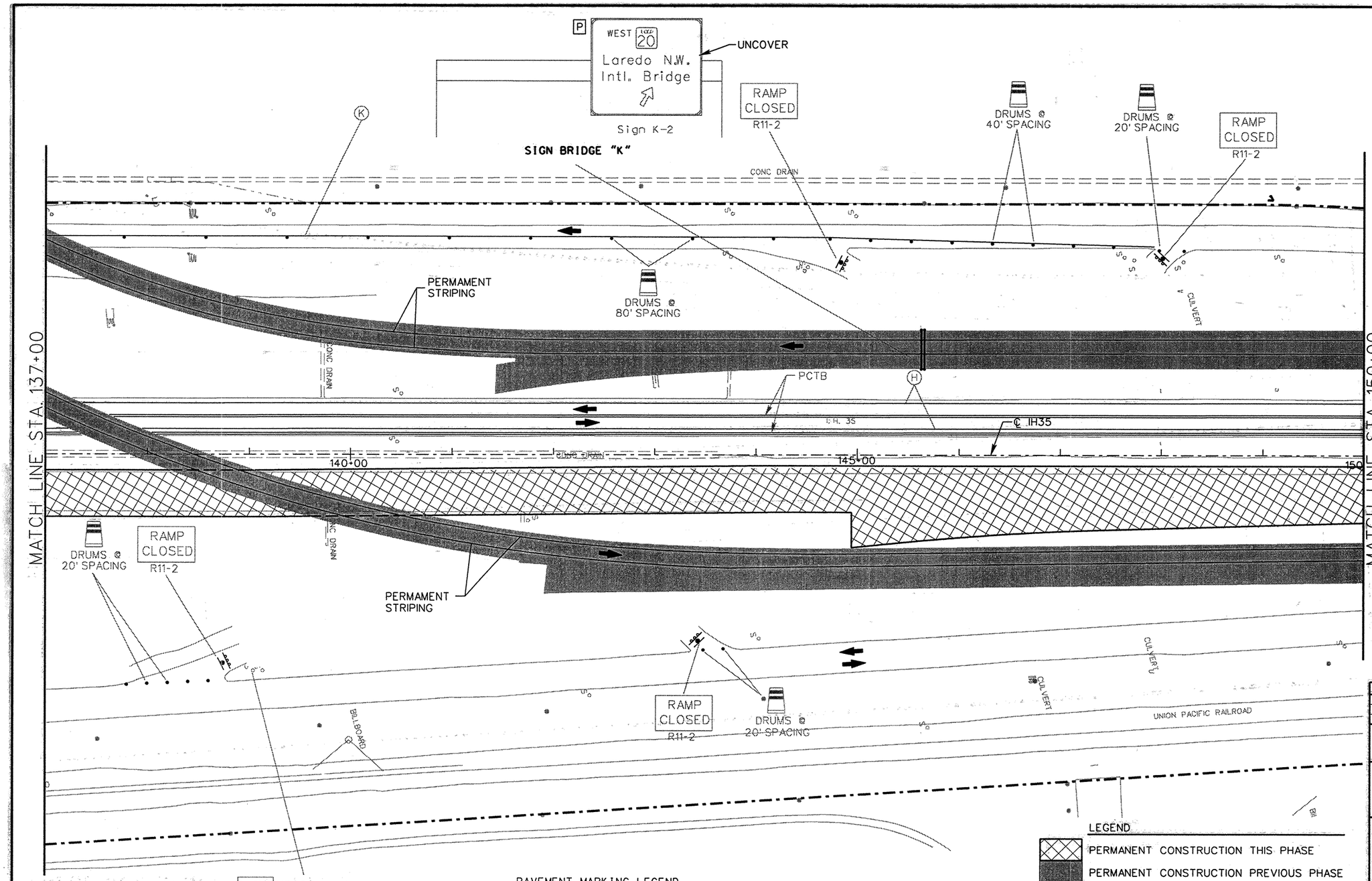

NORTH M3-1B
INTERSTATE 35 M1-1B2
M6-3B

NORTH M3-1
83 M1-4A2
M6-3

PAVEMENT MARKING LEGEND

(A)	0662	0501	WRK ZN PAV MRK REMOV	(W)	(4")	(SLD)
(B)	0662	0502	WRK ZN PAV MRK REMOV	(W)	(4")	(BRK)
(C)	0662	0507	WRK ZN PAV MRK REMOV	(W)	(8")	(SLD)
(D)	0662	0511	WRK ZN PAV MRK REMOV	(W)	(24")	(SLD)
(E)	0662	0523	WRK ZN PAV MRK REMOV	(Y)	(4")	(SLD)
(F)	0662	0525	WRK ZN PAV MRK REMOV	(Y)	(4")	(DOT)
(G)	0662	0532	WRK ZN PAV MRK REMOV	(Y)	(24")	(SLD)
(H)	0662	0549	WRK ZN PAV MRK NON-REMOV	(W)	(4")	(SLD)
(I)	0662	0553	WRK ZN PAV MRK NON-REMOV	(W)	(8")	(SLD)
(J)	0662	0557	WRK ZN PAV MRK NON-REMOV	(W)	(24")	(SLD)
(K)	0662	0569	WRK ZN PAV MRK NON-REMOV	(Y)	(4")	(SLD)

LEGEND

- PERMANENT CONSTRUCTION THIS PHASE
- PERMANENT CONSTRUCTION PREVIOUS PHASE
- TEMPORARY CONSTRUCTION THIS PHASE
- TEMPORARY CONSTRUCTION PREVIOUS PHASE
- PLASTIC DRUMS
- TRAFFIC LANES
- PCTB — PORTABLE CONCRETE TRAFFIC BARRIER
- SIGN PLACED IN PREVIOUS PHASE
- RIGHT OF WAY
- P — PERMANENT SIGN

STATE OF TEXAS
JEFFERY T. SEILER
77187
REGISTERED PROFESSIONAL ENGINEER

Jeffery T. Seiler
5-12-99

DATE	BY	REV	REVISION

© 1999 Texas Department of Transportation

Brown & Root
HOUSTON, TEXAS

RODRIGUEZ & HUGGINS, INC.
CONSULTING ENGINEERS
11824 JOLLYVILLE ROAD SUITE 402
AUSTIN, TEXAS 78759
PHONE: 512 335 1754 FAX: 512 335 1799

IH 35
TRAFFIC CONTROL PLAN PHASE II

0 25 50 100

SHEET 5 OF 9

FED RD DIV NO	STATE PROJECT NO		SHEET NO
6			155
STATE	STATE DIST NO		COUNTY
TEXAS	22		WEBB
CONT	SECT	JOB	HIGHWAY NO
0018	05	057	LOOP 20

80903\Mlo_interchange\mlt0317.dgn

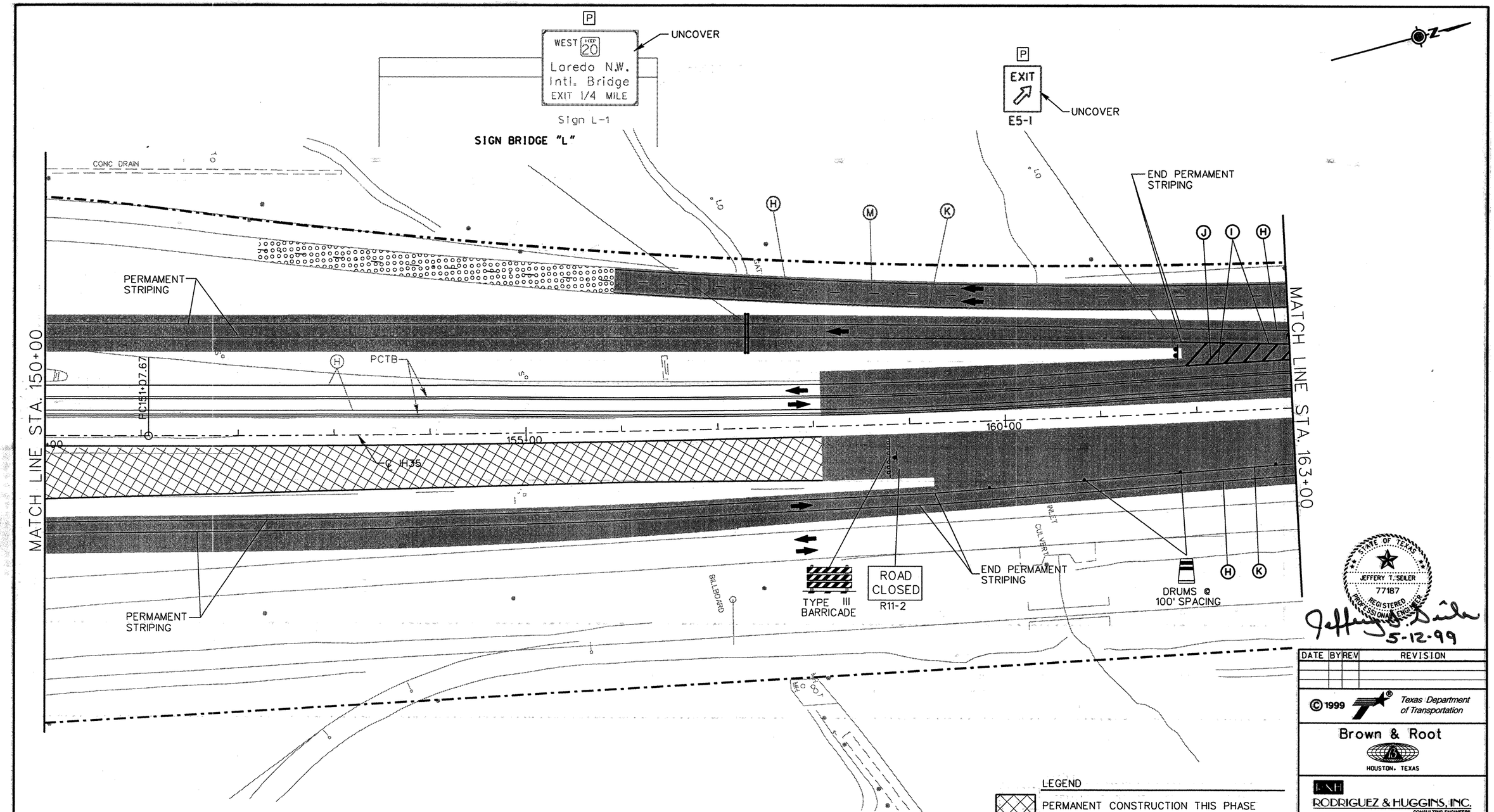

PAVEMENT MARKING LEGEND

(A) 0662 0501 WRK ZN PAV MRK REMOV (W) (4") (SLD)
(B) 0662 0502 WRK ZN PAV MRK REMOV (W) (4") (BRK)
(C) 0662 0507 WRK ZN PAV MRK REMOV (W) (8") (SLD)
(D) 0662 0511 WRK ZN PAV MRK REMOV (W) (24") (SLD)
(E) 0662 0523 WRK ZN PAV MRK REMOV (Y) (4") (SLD)
(F) 0662 0525 WRK ZN PAV MRK REMOV (Y) (4") (DOT)
(G) 0662 0532 WRK ZN PAV MRK REMOV (Y) (24") (SLD)
(H) 0662 0549 WRK ZN PAV MRK NON-REMOV (W) (4") (SLD)
(I) 0662 0553 WRK ZN PAV MRK NON-REMOV (W) (8") (SLD)
(J) 0662 0557 WRK ZN PAV MRK NON-REMOV (W) (24") (SLD)
(K) 0662 0569 WRK ZN PAV MRK NON-REMOV (Y) (4") (SLD)
(M) 0662 0550 WRK ZN PAV MRK NON-REMOV (W) (4") (BRK)

LEGEND

- PERMANENT CONSTRUCTION THIS PHASE
- PERMANENT CONSTRUCTION PREVIOUS PHASE
- TEMPORARY CONSTRUCTION THIS PHASE
- TEMPORARY CONSTRUCTION PREVIOUS PHASE
- PLASTIC DRUMS
- TRAFFIC LANES
- PCTB — PORTABLE CONCRETE TRAFFIC BARRIER
- XXX — SIGN PLACED IN PREVIOUS PHASE
- RIGHT OF WAY
- P — PERMANENT SIGN

STATE OF TEXAS
JEFFERY T. SEILER
77187
REGISTERED PROFESSIONAL ENGINEER

Jeffery T. Seiler
5-12-99

DATE	BY	REV	REVISION

© 1999 Texas Department of Transportation

Brown & Root
HOUSTON, TEXAS

RHI
RODRIGUEZ & HUGGINS, INC.
CONSULTING ENGINEERS
11824 JOLLYVILLE ROAD SUITE 402
AUSTIN, TEXAS 78759
PHONE: 512 335 1754 FAX: 512 335 1799

IH 35
TRAFFIC CONTROL PLAN
PHASE II

0 25 50 100

SHEET 6 OF 9

FED RD DIV NO	STATE PROJECT NO		SHEET NO
6			156
STATE	STATE DIST NO		COUNTY
TEXAS	22		WEBB
CONT	SECT	JOB	HIGHWAY NO
0018	05	057	LOOP 20

80903\Milo Interchange\milTC318.dgn

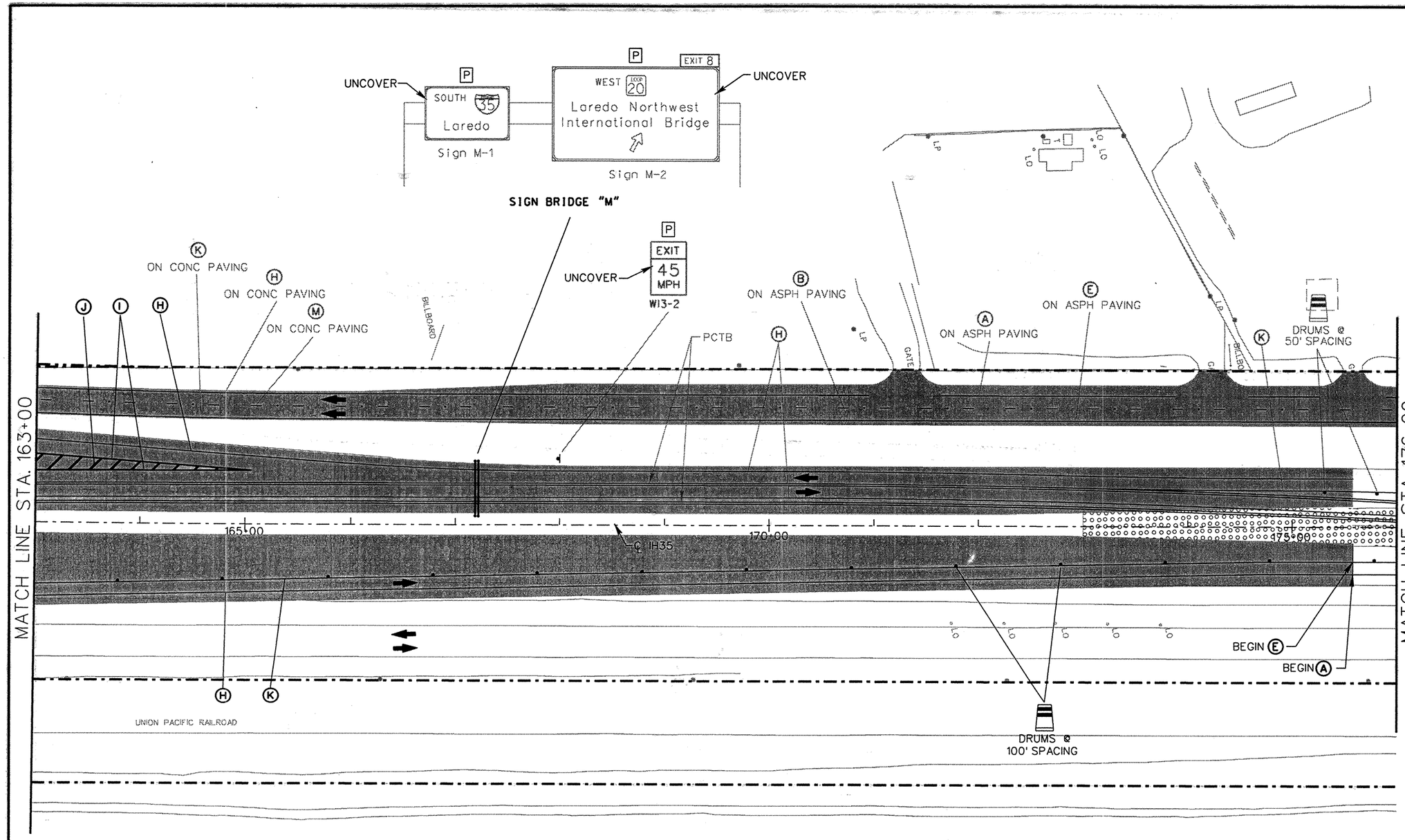

PAVEMENT MARKING LEGEND

(A) 0662 0501 WRK ZN PAV MRK REMOV (W) (4") (SLD)
(B) 0662 0502 WRK ZN PAV MRK REMOV (W) (4") (BRK)
(C) 0662 0507 WRK ZN PAV MRK REMOV (W) (8") (SLD)
(D) 0662 0511 WRK ZN PAV MRK REMOV (W) (24") (SLD)
(E) 0662 0523 WRK ZN PAV MRK REMOV (Y) (4") (SLD)
(F) 0662 0525 WRK ZN PAV MRK REMOV (Y) (4") (DOT)
(G) 0662 0532 WRK ZN PAV MRK REMOV (Y) (24") (SLD)
(H) 0662 0549 WRK ZN PAV MRK NON-REMOV (W) (4") (SLD)
(I) 0662 0553 WRK ZN PAV MRK NON-REMOV (W) (8") (SLD)
(J) 0662 0557 WRK ZN PAV MRK NON-REMOV (W) (24") (SLD)
(K) 0662 0569 WRK ZN PAV MRK NON-REMOV (Y) (4") (SLD)
(M) 0662 0550 WRK ZN PAV MRK NON-REMOV (W) (4") (BRK)

LEGEND

- PERMANENT CONSTRUCTION THIS PHASE
- PERMANENT CONSTRUCTION PREVIOUS PHASE
- TEMPORARY CONSTRUCTION THIS PHASE
- TEMPORARY CONSTRUCTION PREVIOUS PHASE
- PLASTIC DRUMS
- TRAFFIC LANES
- PCTB — PORTABLE CONCRETE TRAFFIC BARRIER
- SIGN PLACED IN PREVIOUS PHASE
- RIGHT OF WAY
- (P) PERMANENT SIGN

STATE OF TEXAS
JEFFERY T. SEILER
77187
REGISTERED PROFESSIONAL ENGINEER
Jeffery T. Seiler 5-12-99

DATE	BY	REV	REVISION

© 1999 Texas Department of Transportation

Brown & Root
HOUSTON, TEXAS

RODRIGUEZ & HUGGINS, INC.
CONSULTING ENGINEERS
11824 JOLLYVILLE ROAD SUITE 402
AUSTIN, TEXAS 78759
PHONE: 512 335 1754 FAX: 512 335 1799

IH 35
TRAFFIC CONTROL PLAN PHASE II

0 25 50 100

SHEET 7 OF 9

FED RD DIV NO	STATE PROJECT NO		SHEET NO
6			157
STATE	STATE DIST NO		COUNTY
TEXAS	22		WEBB
CONT	SECT	JOB	HIGHWAY NO
0018	05	057	LOOP 20

80803\Mlo Interchange\mltc319.dgn

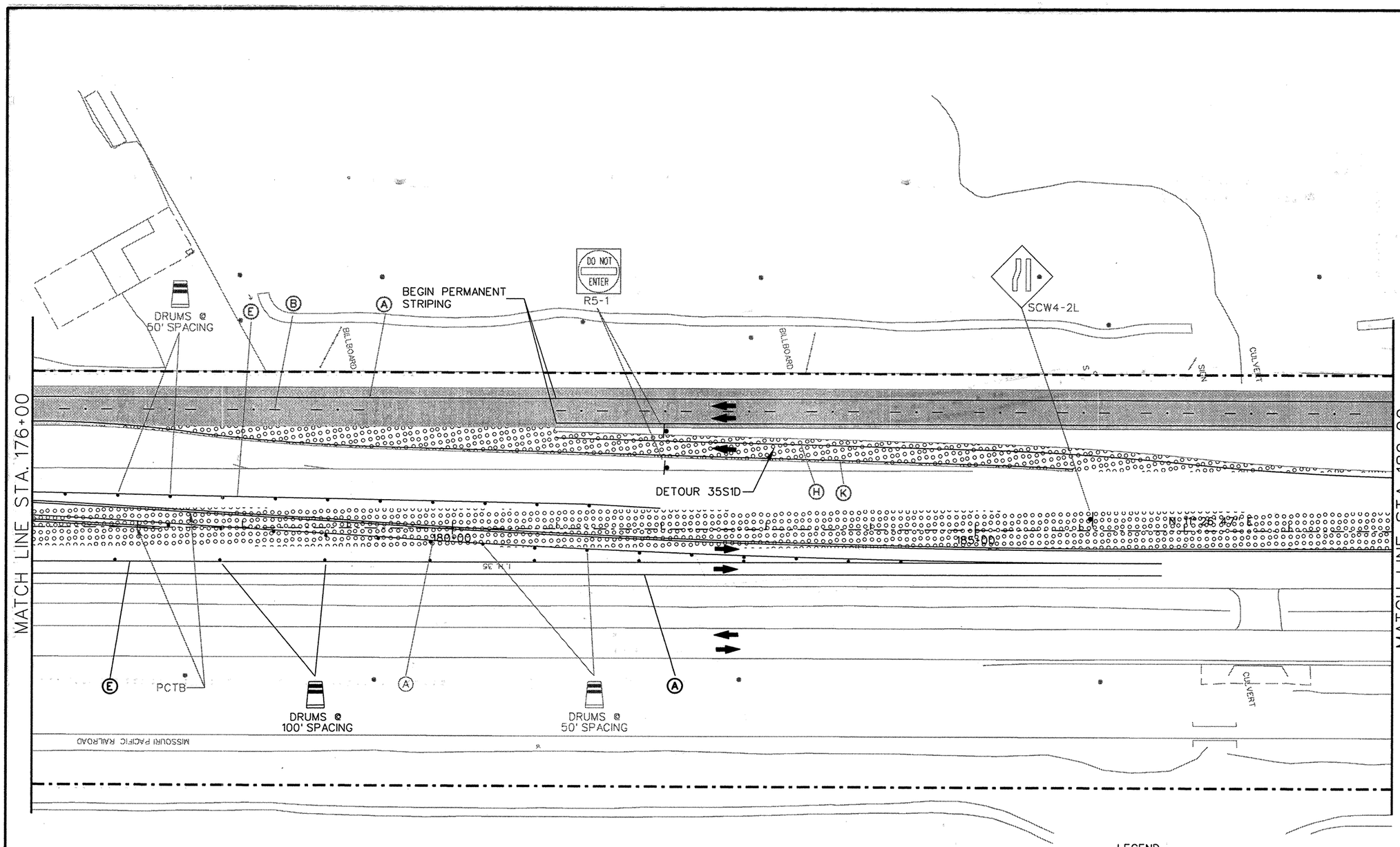

PAVEMENT MARKING LEGEND

(A)	0662	0501	WRK ZN PAV MRK	REMOV	(W)	(4")	(SLD)
(B)	0662	0502	WRK ZN PAV MRK	REMOV	(W)	(4")	(BRK)
(C)	0662	0507	WRK ZN PAV MRK	REMOV	(W)	(8")	(SLD)
(D)	0662	0511	WRK ZN PAV MRK	REMOV	(W)	(24")	(SLD)
(E)	0662	0523	WRK ZN PAV MRK	REMOV	(Y)	(4")	(SLD)
(F)	0662	0525	WRK ZN PAV MRK	REMOV	(Y)	(4")	(DOT)
(G)	0662	0532	WRK ZN PAV MRK	REMOV	(Y)	(24")	(SLD)
(H)	0662	0549	WRK ZN PAV MRK	NON-REMOV	(W)	(4")	(SLD)
(I)	0662	0553	WRK ZN PAV MRK	NON-REMOV	(W)	(8")	(SLD)
(J)	0662	0557	WRK ZN PAV MRK	NON-REMOV	(W)	(24")	(SLD)
(K)	0662	0569	WRK ZN PAV MRK	NON-REMOV	(Y)	(4")	(SLD)

LEGEND

- PERMANENT CONSTRUCTION THIS PHASE
- PERMANENT CONSTRUCTION PREVIOUS PHASE
- TEMPORARY CONSTRUCTION THIS PHASE
- TEMPORARY CONSTRUCTION PREVIOUS PHASE
- PLASTIC DRUMS
- TRAFFIC LANES
- PCTB — PORTABLE CONCRETE TRAFFIC BARRIER
- SIGN PLACED IN PREVIOUS PHASE
- RIGHT OF WAY
- (P) PERMANENT SIGN

STATE OF TEXAS
JEFFERY T. SEILER
77187
REGISTERED PROFESSIONAL ENGINEER

5-6-99

DATE	BY	REV	REVISION

© 1999 Texas Department of Transportation

Brown & Root
HOUSTON, TEXAS

RODRIGUEZ & HUGGINS, INC.
CONSULTING ENGINEERS
11824 JOLLYVILLE ROAD SUITE 402
AUSTIN, TEXAS 78759
PHONE: 512 335 1754 FAX: 512 335 1799

IH 35
TRAFFIC CONTROL PLAN PHASE II

0 25 50 100

SHEET 8 OF 9

FED RD DIV NO	STATE PROJECT NO		SHEET NO
6			158
STATE	STATE DIST NO		COUNTY
TEXAS	22		WEBB
CONT	SECT	JOB	HIGHWAY NO
0018	05	057	LOOP 20

80903\Mlo interchange\mlTC320.dgn

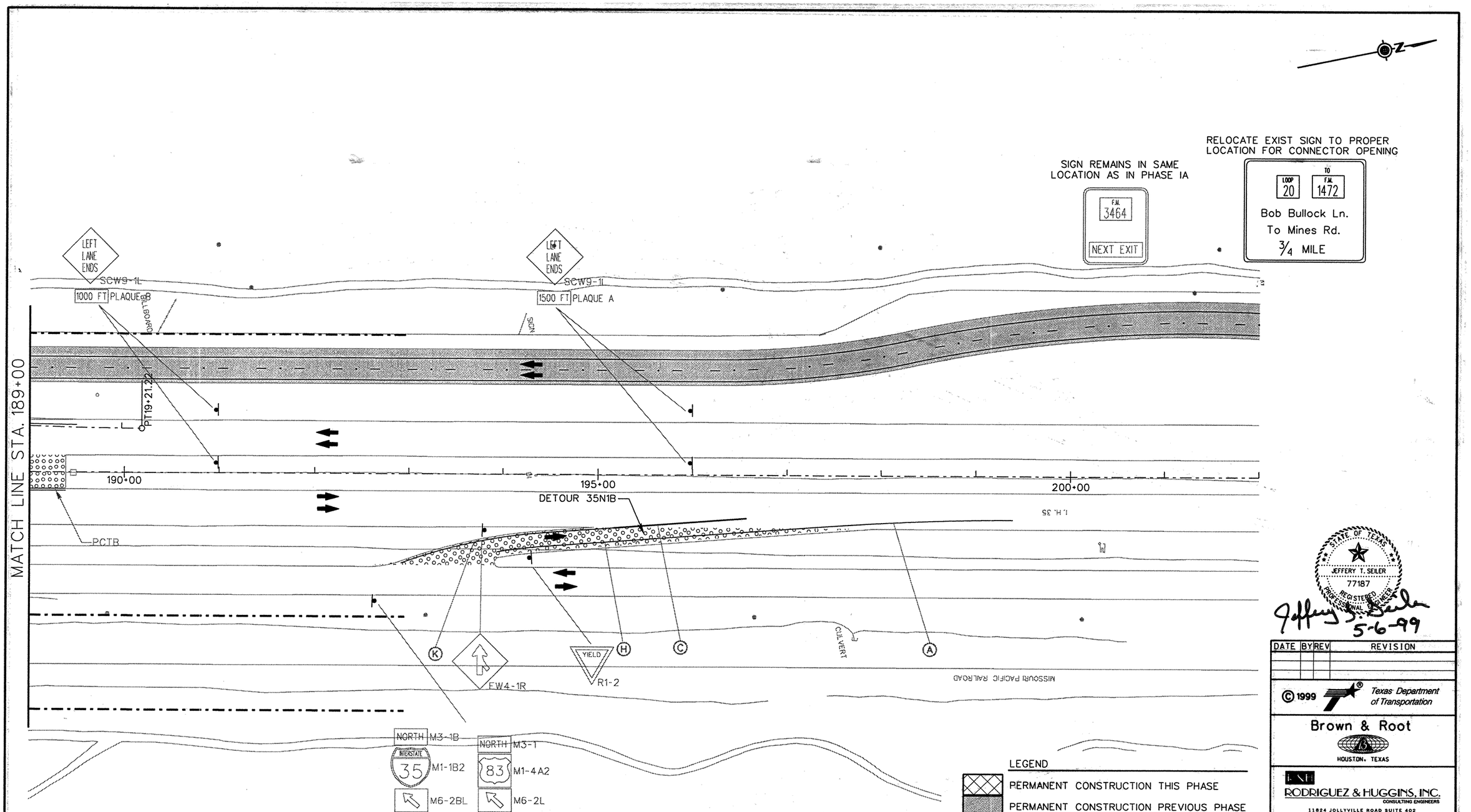

PAVEMENT MARKING LEGEND

A	0662 0501 WRK ZN PAV MRK REMOV (W) (4") (SLD)
B	0662 0502 WRK ZN PAV MRK REMOV (W) (4") (BRK)
C	0662 0507 WRK ZN PAV MRK REMOV (W) (8") (SLD)
D	0662 0511 WRK ZN PAV MRK REMOV (W) (24") (SLD)
E	0662 0523 WRK ZN PAV MRK REMOV (Y) (4") (SLD)
F	0662 0525 WRK ZN PAV MRK REMOV (Y) (4") (DOT)
G	0662 0532 WRK ZN PAV MRK REMOV (Y) (24") (SLD)
H	0662 0549 WRK ZN PAV MRK NON-REMOV (W) (4") (SLD)
I	0662 0553 WRK ZN PAV MRK NON-REMOV (W) (8") (SLD)
J	0662 0557 WRK ZN PAV MRK NON-REMOV (W) (24") (SLD)
K	0662 0569 WRK ZN PAV MRK NON-REMOV (Y) (4") (SLD)

LEGEND

- PERMANENT CONSTRUCTION THIS PHASE
- PERMANENT CONSTRUCTION PREVIOUS PHASE
- TEMPORARY CONSTRUCTION THIS PHASE
- TEMPORARY CONSTRUCTION PREVIOUS PHASE
- PLASTIC DRUMS
- TRAFFIC LANES
- PCTB PORTABLE CONCRETE TRAFFIC BARRIER
- XXX SIGN PLACED IN PREVIOUS PHASE
- RIGHT OF WAY
- P PERMANENT SIGN

STATE OF TEXAS
JEFFERY T. SEILER
77187
REGISTERED PROFESSIONAL ENGINEER

Jeffery T. Seiler
5-6-99

DATE	BY	REV	REVISION

© 1999 Texas Department of Transportation

Brown & Root
HOUSTON, TEXAS

RODRIGUEZ & HUGGINS, INC.
CONSULTING ENGINEERS
11824 JOLLYVILLE ROAD SUITE 402
AUSTIN, TEXAS 78759
PHONE: 512 335 1754 FAX: 512 335 1799

IH 35

TRAFFIC CONTROL PLAN
PHASE II

0 25 50 100

SHEET 9 OF 9

FED RD DIV NO	STATE PROJECT NO		SHEET NO
6			159
STATE	STATE DIST NO		COUNTY
TEXAS	22		WEBB
CONT	SECT	JOB	HIGHWAY NO
0018	05	057	LOOP 20

80903\Mile Interchange\mi1TC321.dgn

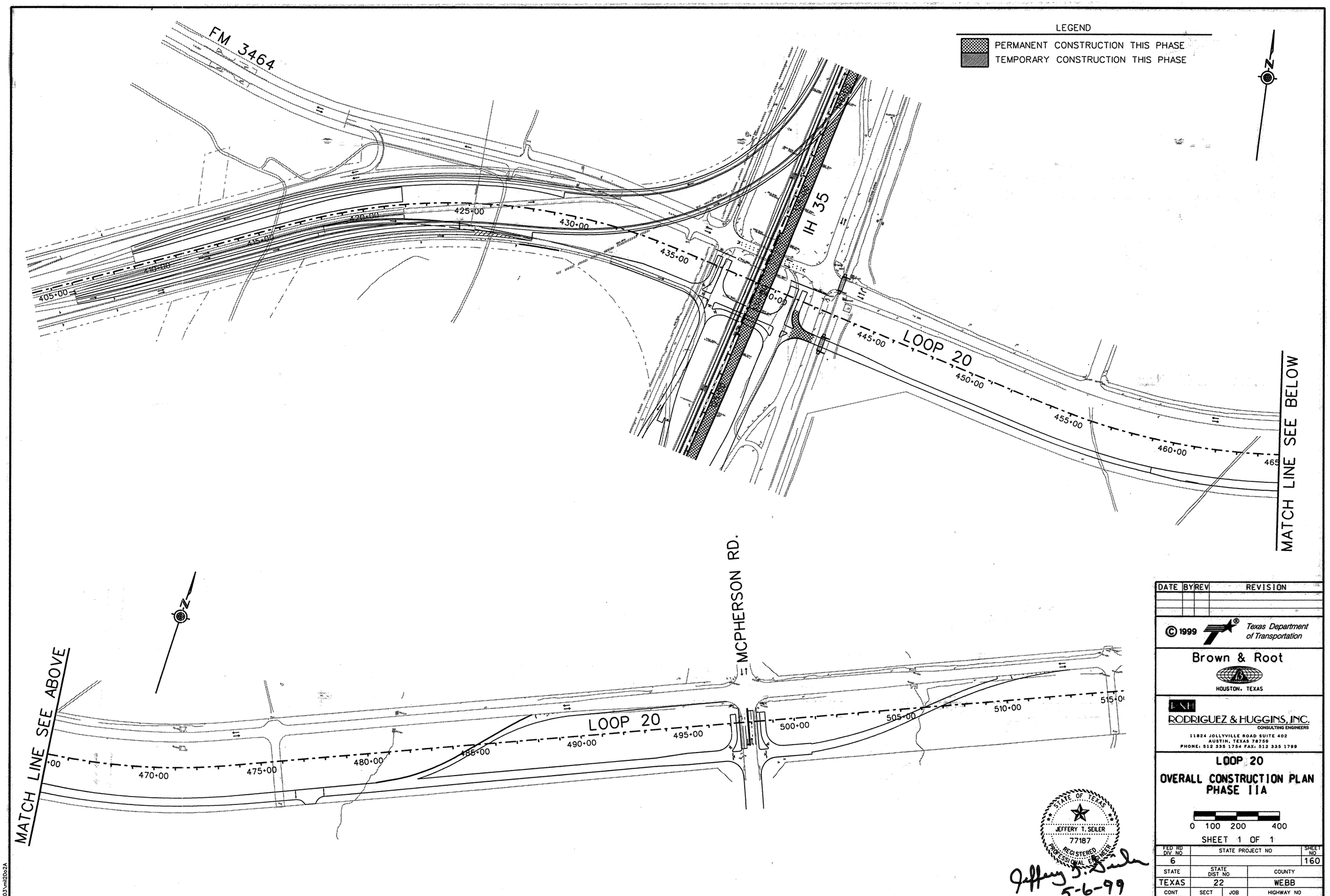

DATE	BY	REV	REVISION

© 1999 Texas Department of Transportation

Brown & Root
HOUSTON, TEXAS

RH
RODRIGUEZ & HUGGINS, INC.
CONSULTING ENGINEERS
11824 JOLLYVILLE ROAD SUITE 402
AUSTIN, TEXAS 78759
PHONE: 512 335 1754 FAX: 512 335 1799

LOOP 20
OVERALL CONSTRUCTION PLAN PHASE IIA

0 100 200 400

SHEET 1 OF 1

STATE OF TEXAS
JEFFERY T. SEILER
77187
REGISTERED PROFESSIONAL ENGINEER

Jeffery T. Seiler
5-6-99

FED RD DIV NO	STATE PROJECT NO		SHEET NO
6			160
STATE	STATE DIST NO	COUNTY	
TEXAS	22	WEBB	
CONT	SECT	JOB	HIGHWAY NO
0086	14	023	LOOP 20

80903.vml20c2A

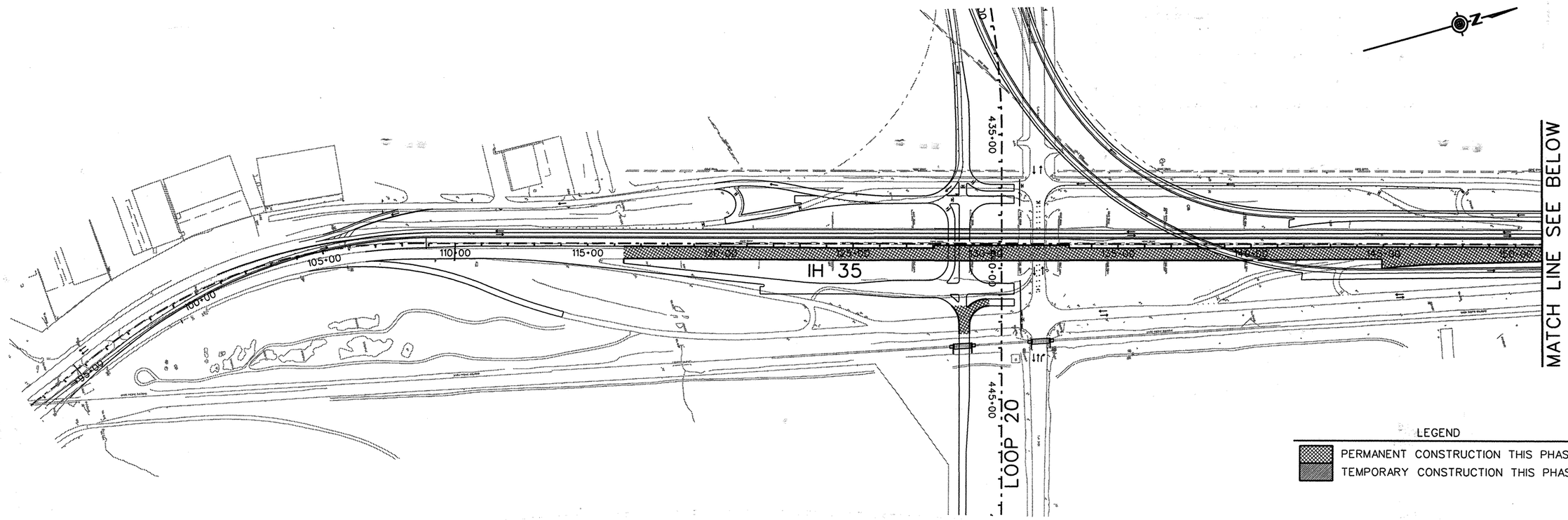

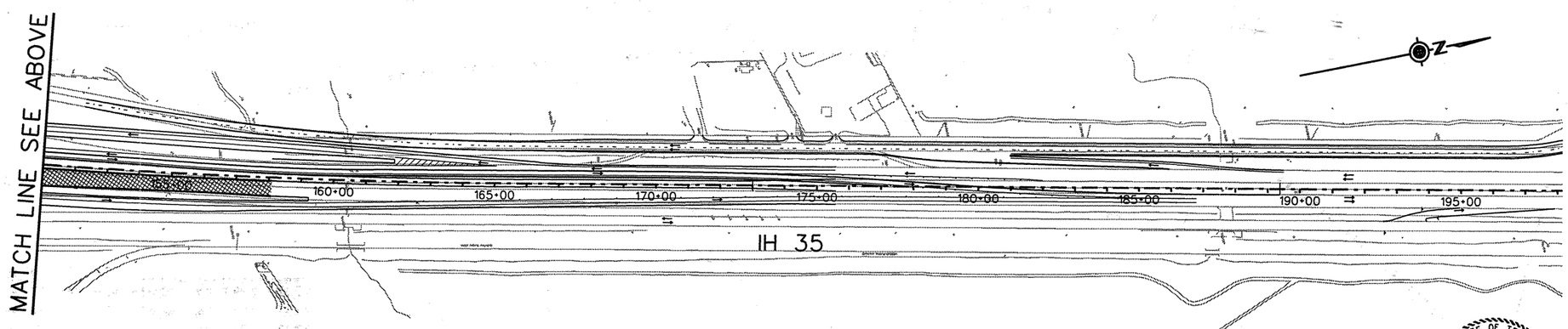

STATE OF TEXAS
JEFFERY T. SEILER
77187
REGISTERED PROFESSIONAL ENGINEER

Jeffery T. Seiler
5-6-99

DATE	BY	REV	REVISION

© 1999 Texas Department of Transportation

Brown & Root
HOUSTON, TEXAS

RODRIGUEZ & HUGGINS, INC.
CONSULTING ENGINEERS
11824 JOLLYVILLE ROAD SUITE 402
AUSTIN, TEXAS 78759
PHONE: 512 335 1754 FAX: 512 335 1799

IH 35
OVERALL CONSTRUCTION PLAN
PHASE IIA

0 100 200 400

SHEET 1 OF 1

FED RD DIV NO	STATE PROJECT NO		SHEET NO
6			161
STATE	STATE DIST NO	COUNTY	
TEXAS	22	WEBB	
CONT	SECT	JOB	HIGHWAY NO
0018	06	131	LOOP 20

80903\vmi35o2A

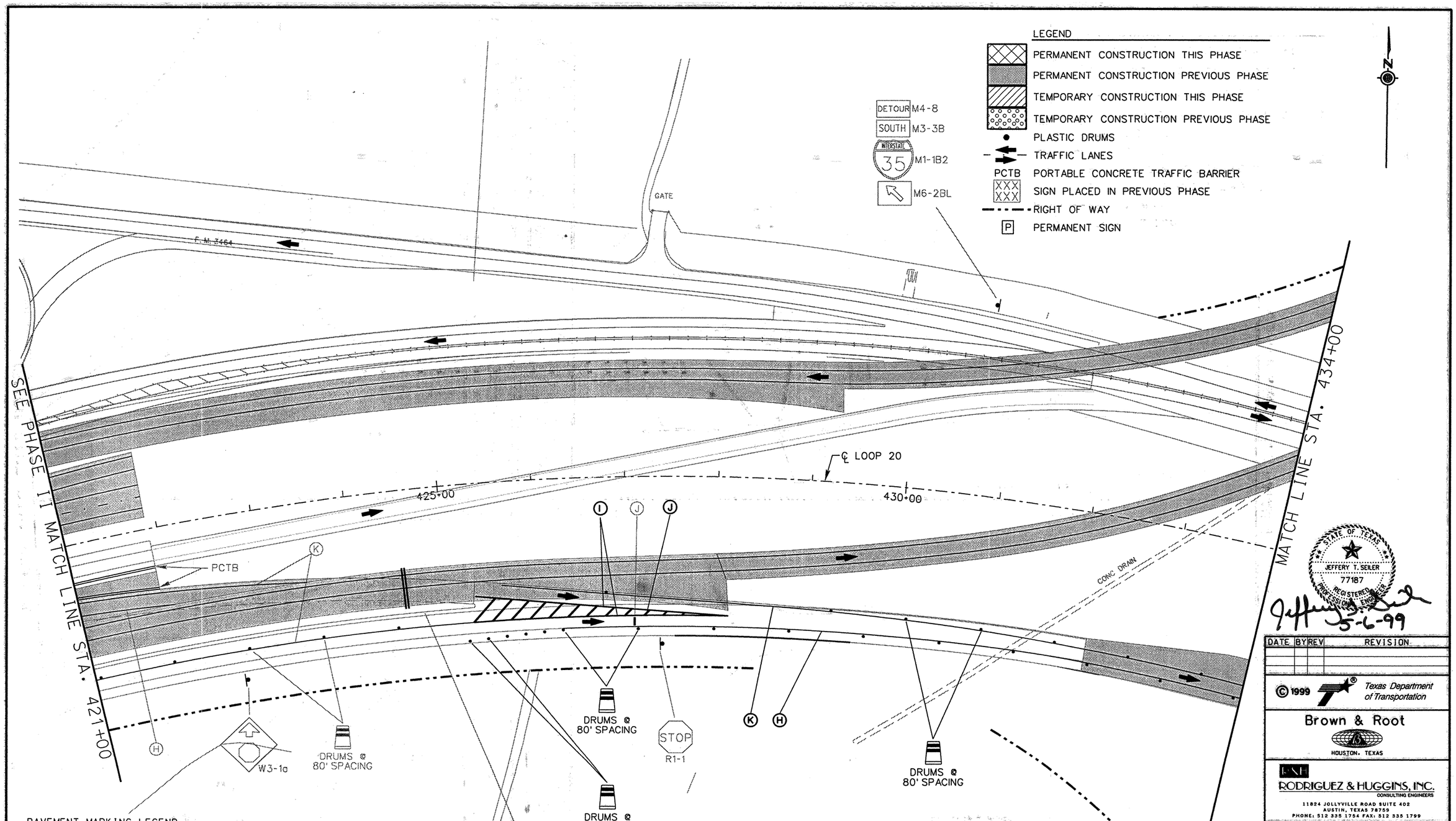

PAVEMENT MARKING LEGEND

A	0662 0501 WRK ZN PAV MRK REMOV (W) (4") (SLD)
B	0662 0502 WRK ZN PAV MRK REMOV (W) (4") (BRK)
C	0662 0507 WRK ZN PAV MRK REMOV (W) (8") (SLD)
D	0662 0511 WRK ZN PAV MRK REMOV (W) (24") (SLD)
E	0662 0523 WRK ZN PAV MRK REMOV (Y) (4") (SLD)
F	0662 0525 WRK ZN PAV MRK REMOV (Y) (4") (DOT)
G	0662 0532 WRK ZN PAV MRK REMOV (Y) (24") (SLD)
H	0662 0549 WRK ZN PAV MRK NON-REMOV (W) (4") (SLD)
I	0662 0553 WRK ZN PAV MRK NON-REMOV (W) (8") (SLD)
J	0662 0557 WRK ZN PAV MRK NON-REMOV (W) (24") (SLD)
K	0662 0569 WRK ZN PAV MRK NON-REMOV (Y) (4") (SLD)

STATE OF TEXAS
JEFFERY T. SEILER
77187
REGISTERED PROFESSIONAL ENGINEER

5-6-99

DATE	BY	REV	REVISION

© 1999 Texas Department of Transportation

Brown & Root
HOUSTON, TEXAS

RODRIGUEZ & HUGGINS, INC.
CONSULTING ENGINEERS
11824 JOLLYVILLE ROAD SUITE 402
AUSTIN, TEXAS 78759
PHONE: 512 335 1754 FAX: 512 335 1799

LOOP 20

TRAFFIC CONTROL PLAN PHASE IIA

0 25 50 100

SHEET 1 OF 2

FED RD DIV NO	STATE PROJECT NO		SHEET NO
6			162
STATE	STATE DIST NO		COUNTY
TEXAS	22		WEBB
CONT	SECT	JOB	HIGHWAY NO
0086	14	023	LOOP 20

80903\Milo Interchange\miTC406.dgn

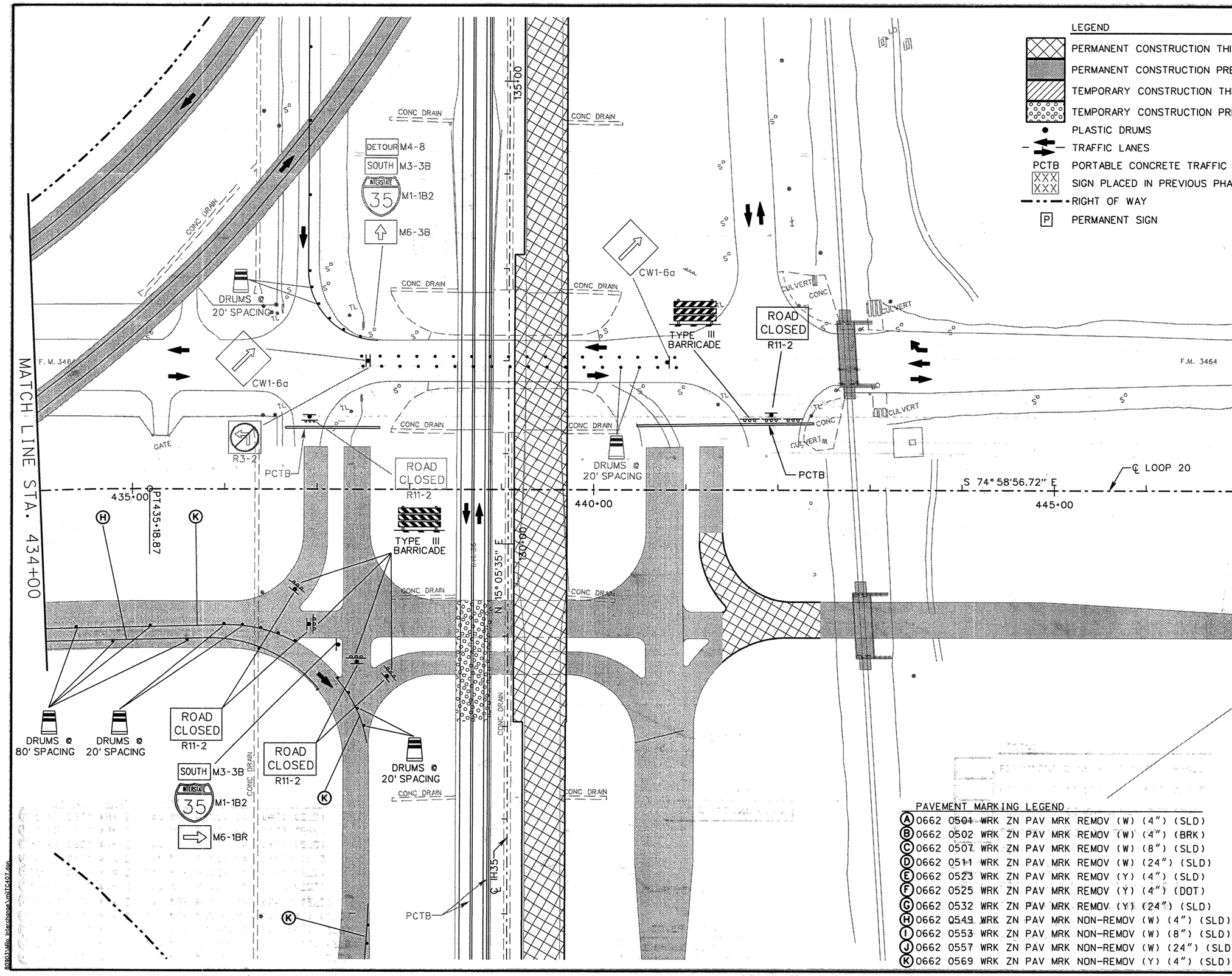

LEGEND

- PERMANENT CONSTRUCTION THIS PHASE
- PERMANENT CONSTRUCTION PREVIOUS PHASE
- TEMPORARY CONSTRUCTION THIS PHASE
- TEMPORARY CONSTRUCTION PREVIOUS PHASE
- PLASTIC DRUMS
- TRAFFIC LANES
- PCTB — PORTABLE CONCRETE TRAFFIC BARRIER
- SIGN PLACED IN PREVIOUS PHASE
- RIGHT OF WAY
- P — PERMANENT SIGN

PAVEMENT MARKING LEGEND

(A)	0662 0504 WRK ZN PAV MRK REMOV (W) (4") (SLD)
(B)	0662 0502 WRK ZN PAV MRK REMOV (W) (4") (BRK)
(C)	0662 0507 WRK ZN PAV MRK REMOV (W) (8") (SLD)
(D)	0662 0511 WRK ZN PAV MRK REMOV (W) (24") (SLD)
(E)	0662 0523 WRK ZN PAV MRK REMOV (Y) (4") (SLD)
(F)	0662 0525 WRK ZN PAV MRK REMOV (Y) (4") (DOT)
(G)	0662 0532 WRK ZN PAV MRK REMOV (Y) (24") (SLD)
(H)	0662 0549 WRK ZN PAV MRK NON-REMOV (W) (4") (SLD)
(I)	0662 0553 WRK ZN PAV MRK NON-REMOV (W) (8") (SLD)
(J)	0662 0557 WRK ZN PAV MRK NON-REMOV (W) (24") (SLD)
(K)	0662 0569 WRK ZN PAV MRK NON-REMOV (Y) (4") (SLD)

STATE OF TEXAS
JEFFERY T. SEILER
77187
REGISTERED PROFESSIONAL ENGINEER

5-6-99

DATE	BY	REV	REVISION

© 1999 Texas Department of Transportation

Brown & Root
HOUSTON, TEXAS

RODRIGUEZ & HUGGINS, INC.
CONSULTING ENGINEERS
11824 JOLLYVILLE ROAD SUITE 402
AUSTIN, TEXAS 78759
PHONE: 512 335 1754 FAX: 512 335 1799

LOOP 20
TRAFFIC CONTROL PLAN PHASE IIA

0 25 50 100

SHEET 2 OF 2

FED RD DIV NO	STATE PROJECT NO		SHEET NO
6			163
STATE	STATE DIST NO		COUNTY
TEXAS	22		WEBB
CONT	SECT	JOB	HIGHWAY NO
0086	14	023	LOOP 20

80803\Mlo_Interchange\mltC407.dgn

UNIROYAL ROAD DETOUR SIGNING
N.T.S.

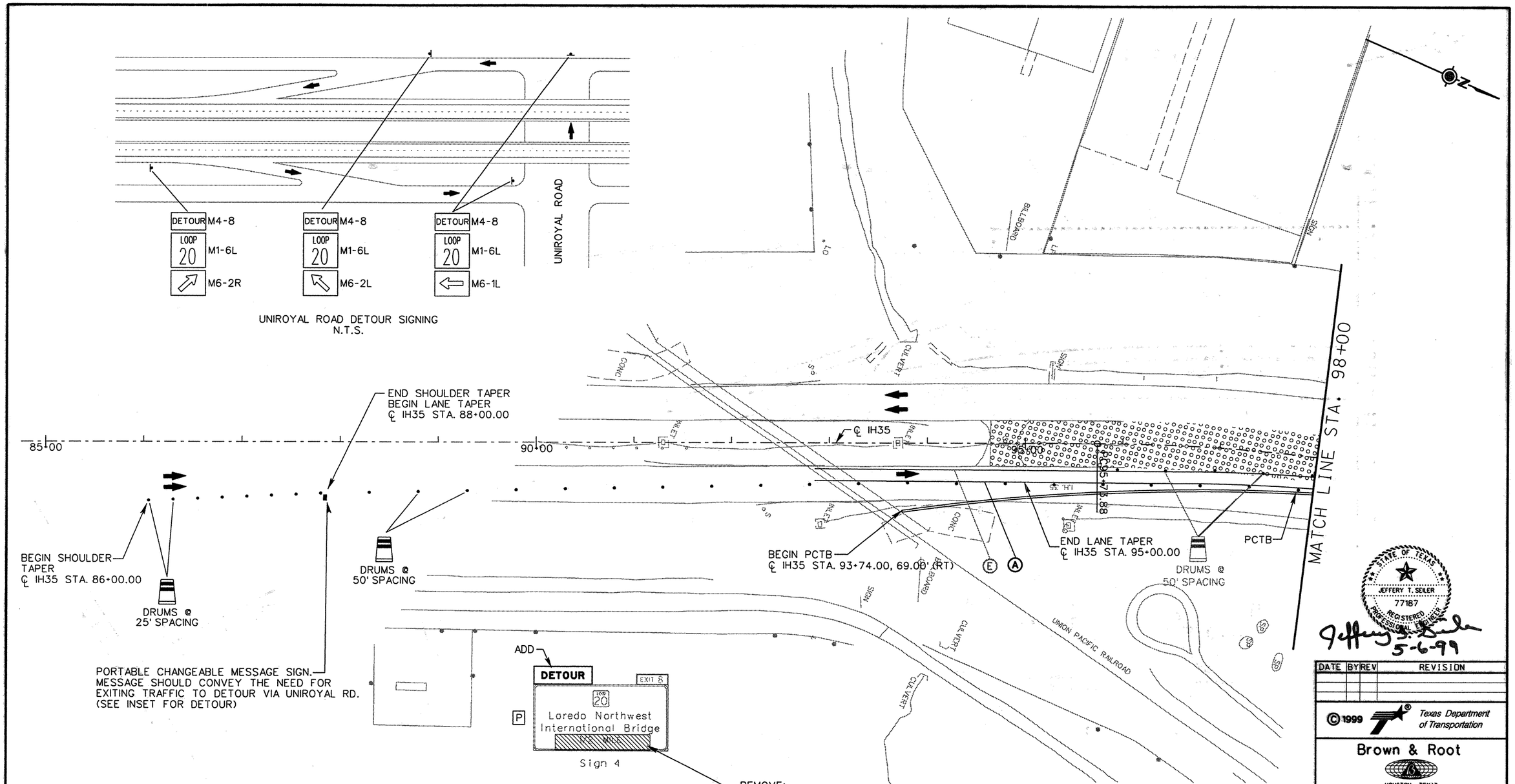

PAVEMENT MARKING LEGEND

(A)	0662	0501	WRK ZN PAV MRK	REMOV	(W)	(4")	(SLD)
(B)	0662	0502	WRK ZN PAV MRK	REMOV	(W)	(4")	(BRK)
(C)	0662	0507	WRK ZN PAV MRK	REMOV	(W)	(8")	(SLD)
(D)	0662	0511	WRK ZN PAV MRK	REMOV	(W)	(24")	(SLD)
(E)	0662	0523	WRK ZN PAV MRK	REMOV	(Y)	(4")	(SLD)
(F)	0662	0525	WRK ZN PAV MRK	REMOV	(Y)	(4")	(DOT)
(G)	0662	0532	WRK ZN PAV MRK	REMOV	(Y)	(24")	(SLD)
(H)	0662	0549	WRK ZN PAV MRK	NON-REMOV	(W)	(4")	(SLD)
(I)	0662	0553	WRK ZN PAV MRK	NON-REMOV	(W)	(8")	(SLD)
(J)	0662	0557	WRK ZN PAV MRK	NON-REMOV	(W)	(24")	(SLD)
(K)	0662	0569	WRK ZN PAV MRK	NON-REMOV	(Y)	(4")	(SLD)

LEGEND

- PERMANENT CONSTRUCTION THIS PHASE
- PERMANENT CONSTRUCTION PREVIOUS PHASE
- TEMPORARY CONSTRUCTION THIS PHASE
- TEMPORARY CONSTRUCTION PREVIOUS PHASE
- PLASTIC DRUMS
- TRAFFIC LANES
- PCTB — PORTABLE CONCRETE TRAFFIC BARRIER
- SIGN PLACED IN PREVIOUS PHASE
- RIGHT OF WAY
- P — PERMANENT SIGN

STATE OF TEXAS
JEFFERY T. SEILER
77187
REGISTERED PROFESSIONAL ENGINEER
5-6-99

DATE	BY	REV	REVISION

© 1999 Texas Department of Transportation

Brown & Root
HOUSTON, TEXAS

RODRIGUEZ & HUGGINS, INC.
CONSULTING ENGINEERS
11824 JOLLYVILLE ROAD SUITE 402
AUSTIN, TEXAS 78759
PHONE: 512 335 1754 FAX: 512 335 1799

IH 35
TRAFFIC CONTROL PLAN
PHASE 11A

0 25 50 100

SHEET 1 OF 2

FED RD DIV NO	STATE PROJECT NO		SHEET NO
6			164
STATE	STATE DIST NO	COUNTY	
TEXAS	22	WEBB	
CONT	SECT	JOB	HIGHWAY NO
0018	05	057	LOOP 20

80903\Mp_Interchange\uniTC413.dgn

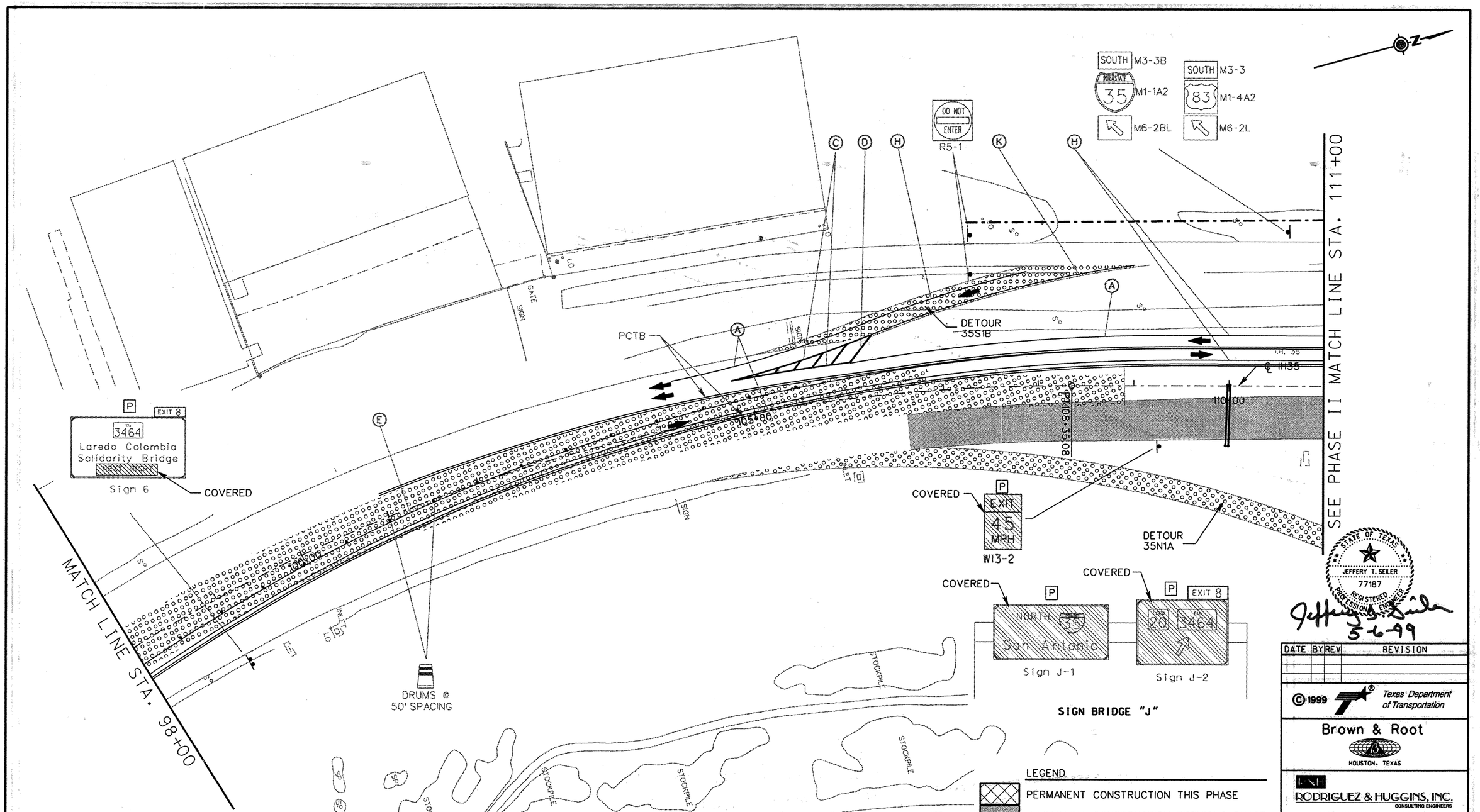

PAVEMENT MARKING LEGEND

(A) 0662 0501 WRK ZN PAV MRK REMOV (W) (4") (SLD)
(B) 0662 0502 WRK ZN PAV MRK REMOV (W) (4") (BRK)
(C) 0662 0507 WRK ZN PAV MRK REMOV (W) (8") (SLD)
(D) 0662 0511 WRK ZN PAV MRK REMOV (W) (24") (SLD)
(E) 0662 0523 WRK ZN PAV MRK REMOV (Y) (4") (SLD)
(F) 0662 0525 WRK ZN PAV MRK REMOV (Y) (4") (DOT)
(G) 0662 0532 WRK ZN PAV MRK REMOV (Y) (24") (SLD)
(H) 0662 0549 WRK ZN PAV MRK NON-REMOV (W) (4") (SLD)
(I) 0662 0553 WRK ZN PAV MRK NON-REMOV (W) (8") (SLD)
(J) 0662 0557 WRK ZN PAV MRK NON-REMOV (W) (24") (SLD)
(K) 0662 0569 WRK ZN PAV MRK NON-REMOV (Y) (4") (SLD)

80903\Mlo Interchange\mlTC414.dgn

STATE OF TEXAS
JEFFERY T. SEILER
77187
REGISTERED PROFESSIONAL ENGINEER

Jeffery T. Seiler
5-6-99

DATE	BY	REV	REVISION

© 1999 Texas Department of Transportation

Brown & Root
HOUSTON, TEXAS

RODRIGUEZ & HUGGINS, INC.
CONSULTING ENGINEERS
11824 JOLLYVILLE ROAD SUITE 402
AUSTIN, TEXAS 78759
PHONE: 512 335 1754 FAX: 512 335 1799

IH 35
TRAFFIC CONTROL PLAN
PHASE IIA

0 25 50 100

SHEET 2 OF 2

FED RD DIV NO	STATE PROJECT NO		SHEET NO
6			165
STATE	STATE DIST NO		COUNTY
TEXAS	22		WEBB
CONT	SECT	JOB	HIGHWAY NO
0018	05	057	LOOP 20

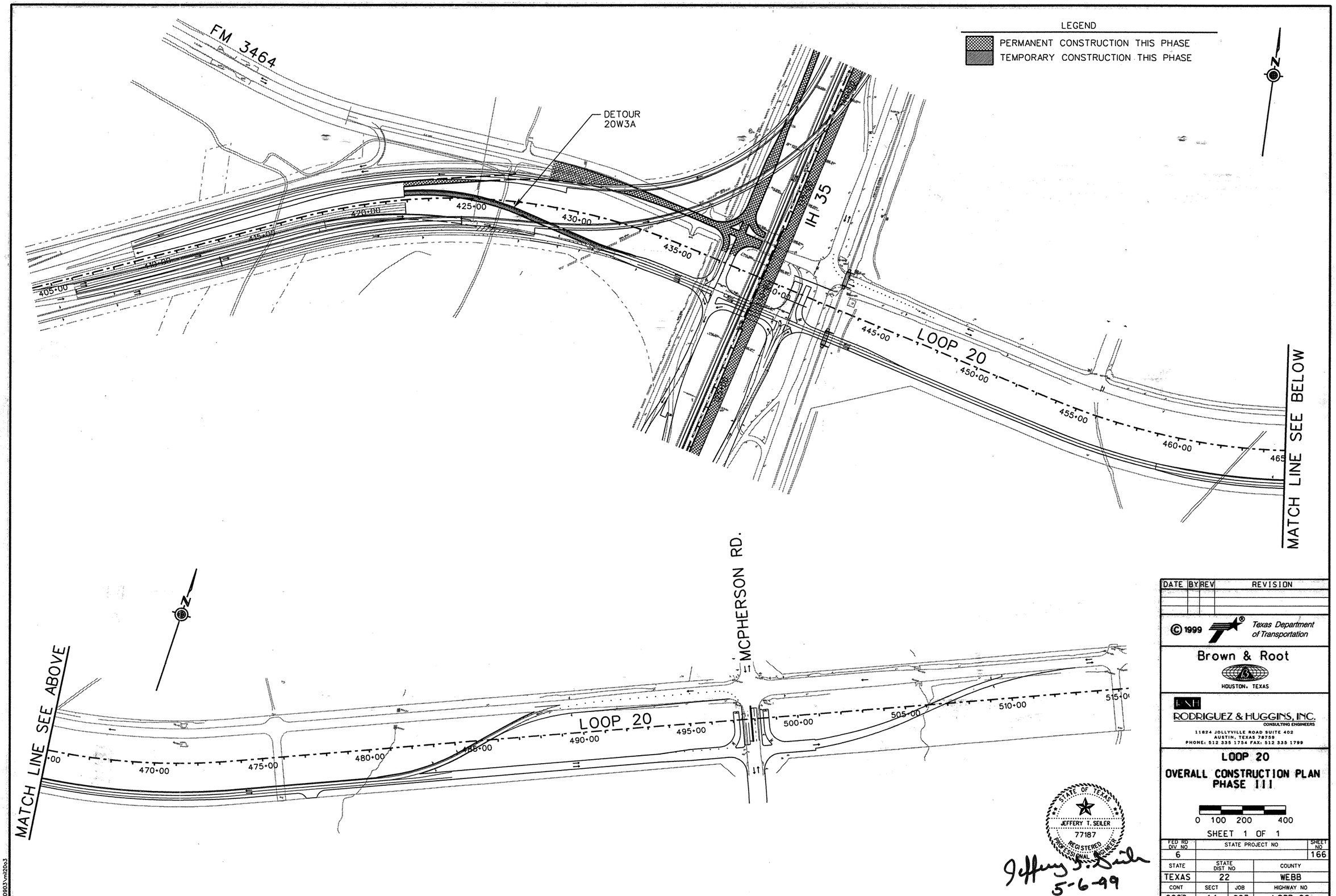

DATE	BY	REV	REVISION

© 1999 Texas Department of Transportation

Brown & Root
HOUSTON, TEXAS

RHI
RODRIGUEZ & HUGGINS, INC.
CONSULTING ENGINEERS
11824 JOLLYVILLE ROAD SUITE 402
AUSTIN, TEXAS 78759
PHONE: 512 335 1754 FAX: 512 335 1799

LOOP 20
OVERALL CONSTRUCTION PLAN
PHASE III

0 100 200 400

SHEET 1 OF 1

FED RD DIV NO	STATE PROJECT NO		SHEET NO
6			166
STATE	STATE DIST NO		COUNTY
TEXAS	22		WEBB
CONT	SECT	JOB	HIGHWAY NO
0086	14	023	LOOP 20

80903\mil20o3

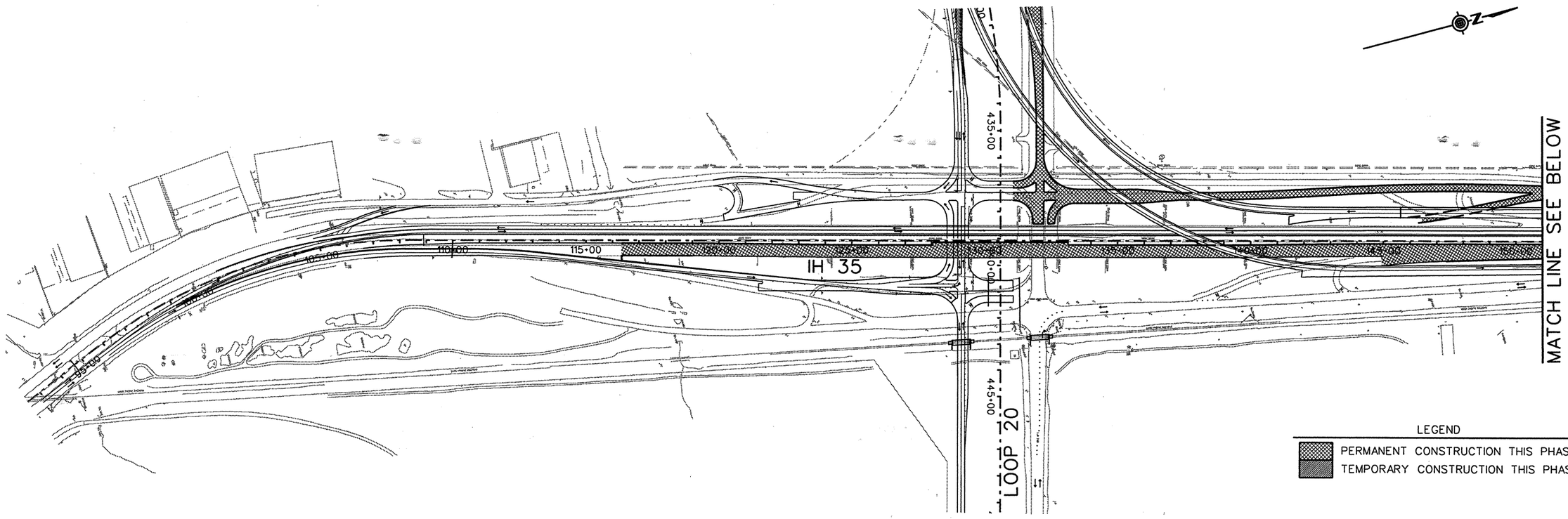

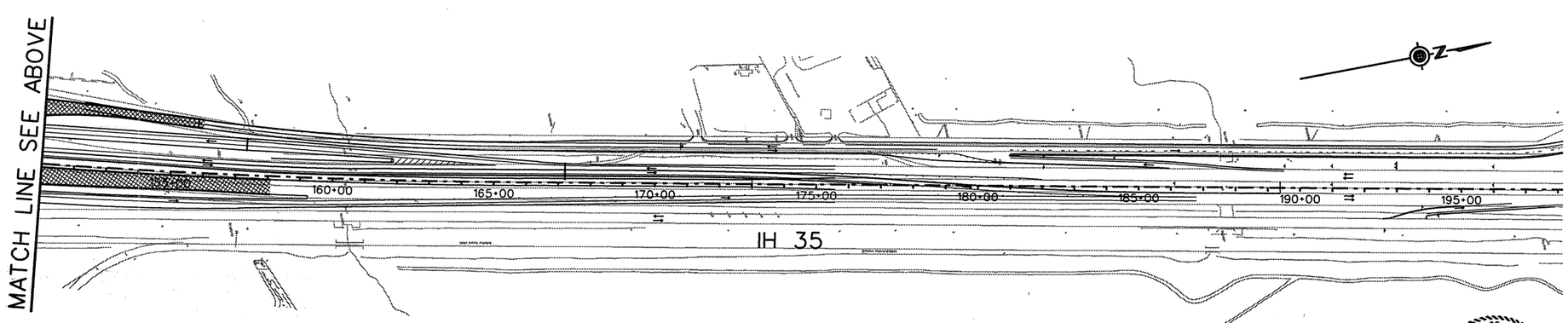

STATE OF TEXAS
JEFFERY T. SEILER
77187
REGISTERED PROFESSIONAL ENGINEER

Jeffery T. Seiler
5-6-99

DATE	BY	REV	REVISION

© 1999 Texas Department of Transportation

Brown & Root
HOUSTON, TEXAS

RODRIGUEZ & HUGGINS, INC.
CONSULTING ENGINEERS
11824 JOLLYVILLE ROAD SUITE 402
AUSTIN, TEXAS 78759
PHONE: 512 335 1754 FAX: 512 335 1799

IH 35
OVERALL CONSTRUCTION PLAN PHASE III

0 100 200 400

SHEET 1 OF 1

FED RD DIV NO	STATE PROJECT NO		SHEET NO
6			167
STATE	STATE DIST NO		COUNTY
TEXAS	22		WEBB
CONT	SECT	JOB	HIGHWAY NO
0018	06	131	LOOP 20

80903\mi35o3

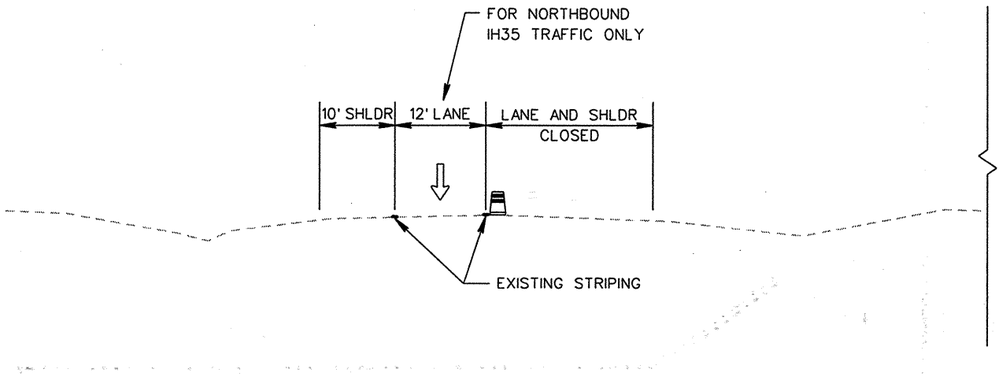

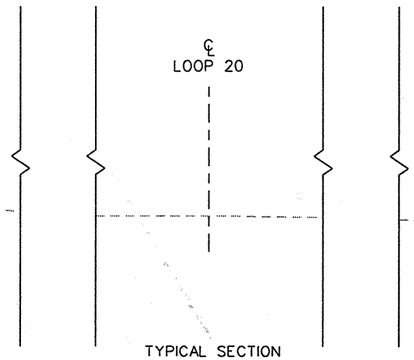

TYPICAL SECTION
STA 432+00 TO STA 481+00

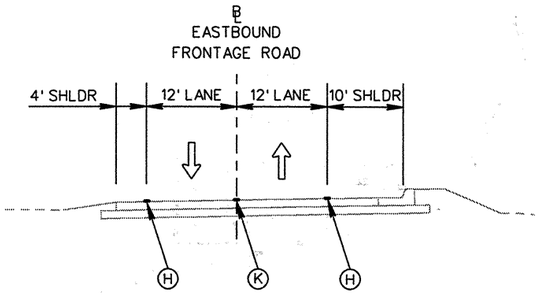

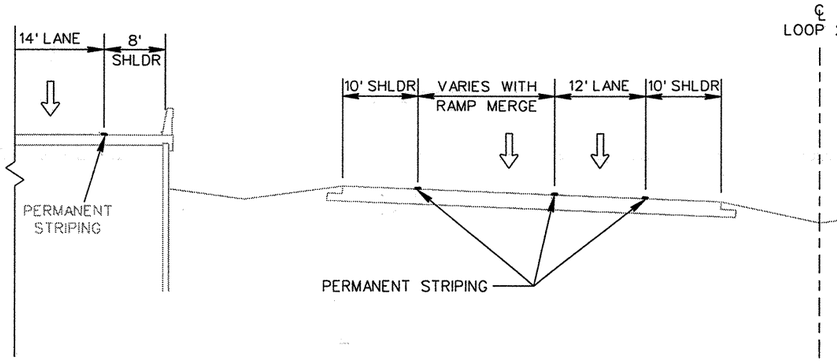

TYPICAL SECTION
STA 409+00 TO STA 421+90

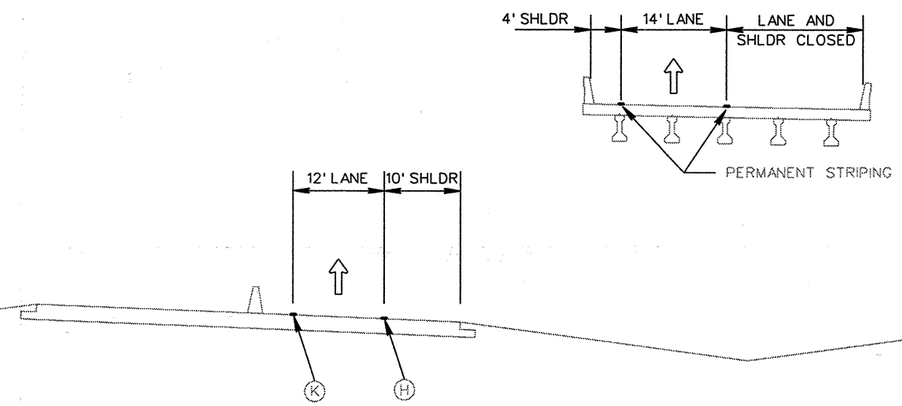

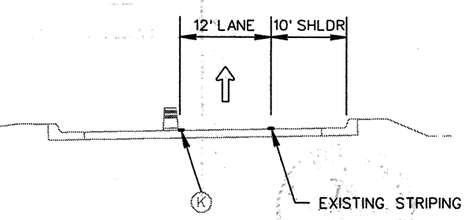

PAVEMENT MARKING LEGEND

Ⓐ 0662 0501 WRK ZN PAV MRK REMOV (W) (4") (SLD)
Ⓑ 0662 0502 WRK ZN PAV MRK REMOV (W) (4") (BRK)
Ⓒ 0662 0507 WRK ZN PAV MRK REMOV (W) (8") (SLD)
Ⓓ 0662 0511 WRK ZN PAV MRK REMOV (W) (24") (SLD)
Ⓔ 0662 0523 WRK ZN PAV MRK REMOV (Y) (4") (SLD)
Ⓕ 0662 0525 WRK ZN PAV MRK REMOV (Y) (4") (DOT)
Ⓖ 0662 0532 WRK ZN PAV MRK REMOV (Y) (24") (SLD)
Ⓗ 0662 0549 WRK ZN PAV MRK NON-REMOV (W) (4") (SLD)
Ⓘ 0662 0553 WRK ZN PAV MRK NON-REMOV (W) (8") (SLD)
Ⓙ 0662 0557 WRK ZN PAV MRK NON-REMOV (W) (24") (SLD)
Ⓚ 0662 0569 WRK ZN PAV MRK NON-REMOV (Y) (4") (SLD)

STATE OF TEXAS
JEFFERY T. SEILER
77187
REGISTERED
PROFESSIONAL ENGINEER

Jeffery T. Seiler
5-6-99

NOTE: THE ABOVE TRAFFIC CONTROL SET-UPS MAY ALSO BE USED FOR PHASE IV TRAFFIC CONTROL EXCEPT EXISTING FM3464 IS CLOSED TO TRAFFIC WITHIN THE LIMITS SHOWN IN THE TRAFFIC CONTROL PLAN PHASE IV SHEETS.

DATE	BY	REV	REVISION

© 1999 Texas Department of Transportation

Brown & Root
HOUSTON, TEXAS

RODRIGUEZ & HUGGINS, INC.
CONSULTING ENGINEERS
11824 JOLLYVILLE ROAD SUITE 402
AUSTIN, TEXAS 78759
PHONE: 512 335 1754 FAX: 512 335 1799

LOOP 20

TCP TYPICAL SECTIONS
PHASE III

0 10 20

SHEET 1 OF 1

FED RD DIV NO	STATE PROJECT NO		SHEET NO
6			168
STATE	STATE DIST NO		COUNTY
TEXAS	22		WEBB
CONT	SECT	JOB	HIGHWAY NO
0086	14	023	LOOP 20

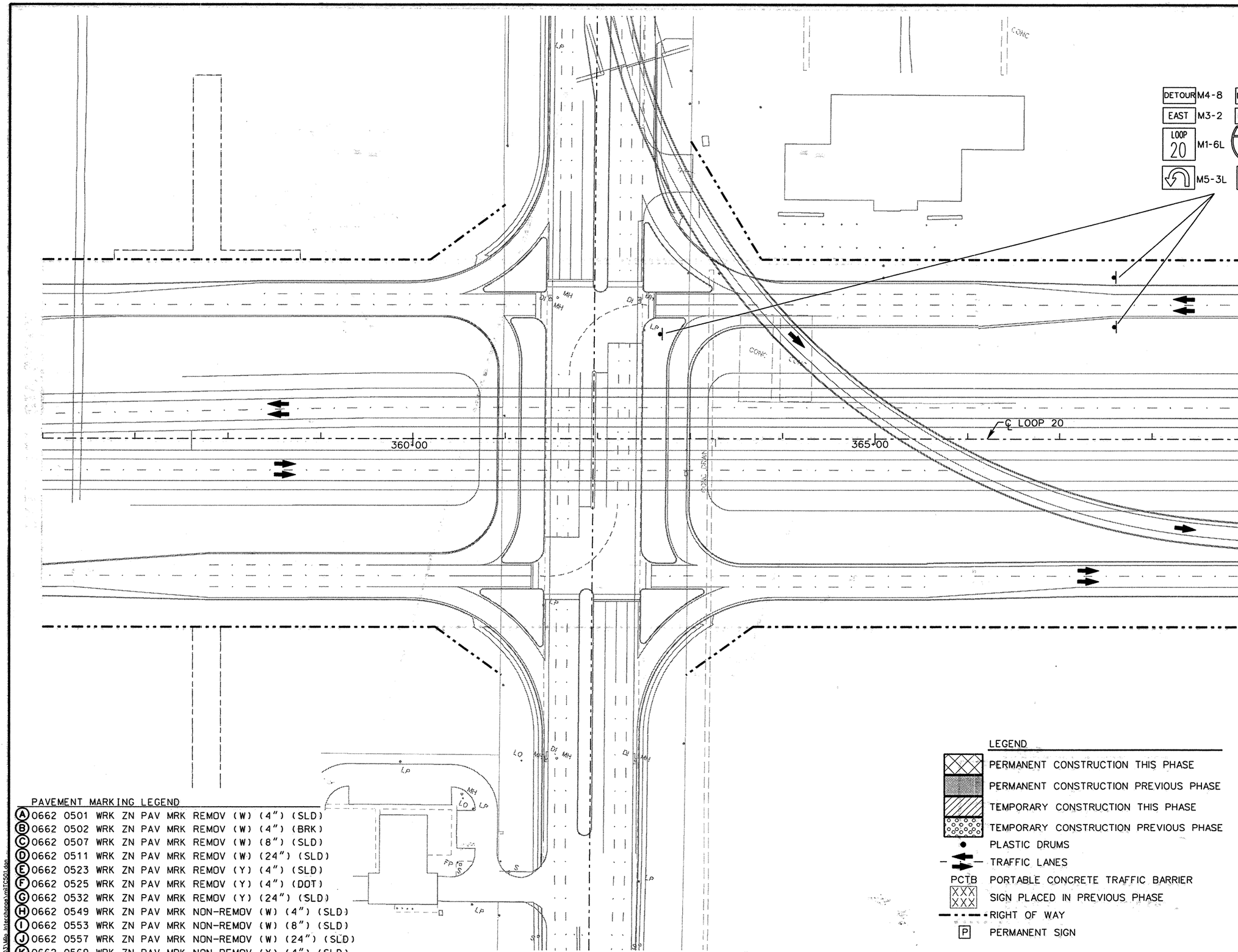

PAVEMENT MARKING LEGEND

(A) 0662 0501 WRK ZN PAV MRK REMOV (W) (4") (SLD)
(B) 0662 0502 WRK ZN PAV MRK REMOV (W) (4") (BRK)
(C) 0662 0507 WRK ZN PAV MRK REMOV (W) (8") (SLD)
(D) 0662 0511 WRK ZN PAV MRK REMOV (W) (24") (SLD)
(E) 0662 0523 WRK ZN PAV MRK REMOV (Y) (4") (SLD)
(F) 0662 0525 WRK ZN PAV MRK REMOV (Y) (4") (DOT)
(G) 0662 0532 WRK ZN PAV MRK REMOV (Y) (24") (SLD)
(H) 0662 0549 WRK ZN PAV MRK NON-REMOV (W) (4") (SLD)
(I) 0662 0553 WRK ZN PAV MRK NON-REMOV (W) (8") (SLD)
(J) 0662 0557 WRK ZN PAV MRK NON-REMOV (W) (24") (SLD)
(K) 0662 0569 WRK ZN PAV MRK NON-REMOV (Y) (4") (SLD)

LEGEND

- PERMANENT CONSTRUCTION THIS PHASE
- PERMANENT CONSTRUCTION PREVIOUS PHASE
- TEMPORARY CONSTRUCTION THIS PHASE
- TEMPORARY CONSTRUCTION PREVIOUS PHASE
- PLASTIC DRUMS
- TRAFFIC LANES
- PCTB PORTABLE CONCRETE TRAFFIC BARRIER
- XXX SIGN PLACED IN PREVIOUS PHASE
- RIGHT OF WAY
- P PERMANENT SIGN

STATE OF TEXAS
JEFFERY T. SEILER
77187
REGISTERED PROFESSIONAL ENGINEER

Jeffery T. Seiler
5-6-99

DATE	BY	REV	REVISION

© 1999 Texas Department of Transportation

Brown & Root
HOUSTON, TEXAS

RODRIGUEZ & HUGGINS, INC.
CONSULTING ENGINEERS
11824 JOLLYVILLE ROAD SUITE 402
AUSTIN, TEXAS 78759
PHONE: 512 335 1754 FAX: 512 335 1799

LOOP 20
TRAFFIC CONTROL PLAN PHASE III

0 25 50 100

SHEET 1 OF 12

FED RD DIV NO	STATE PROJECT NO		SHEET NO
6			169
STATE	STATE DIST NO		COUNTY
TEXAS	22		WEBB
CONT	SECT	JOB	HIGHWAY NO
0086	14	023	LOOP 20

80903\Mio Interchange\miTC501.dgn

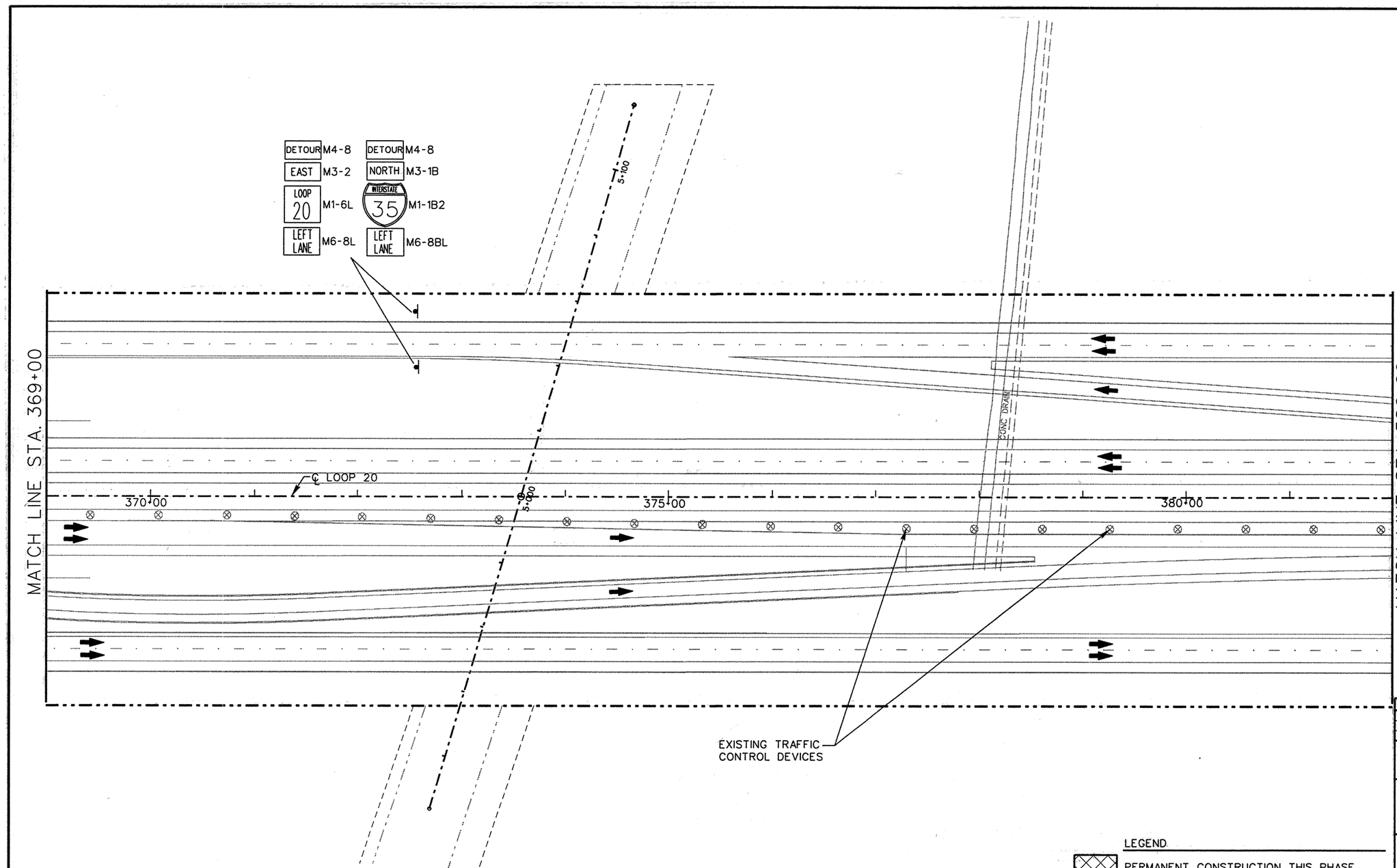

PAVEMENT MARKING LEGEND

(A) 0662 0501 WRK ZN PAV MRK REMOV (W) (4") (SLD)
(B) 0662 0502 WRK ZN PAV MRK REMOV (W) (4") (BRK)
(C) 0662 0507 WRK ZN PAV MRK REMOV (W) (8") (SLD)
(D) 0662 0511 WRK ZN PAV MRK REMOV (W) (24") (SLD)
(E) 0662 0523 WRK ZN PAV MRK REMOV (Y) (4") (SLD)
(F) 0662 0525 WRK ZN PAV MRK REMOV (Y) (4") (DOT)
(G) 0662 0532 WRK ZN PAV MRK REMOV (Y) (24") (SLD)
(H) 0662 0549 WRK ZN PAV MRK NON-REMOV (W) (4") (SLD)
(I) 0662 0553 WRK ZN PAV MRK NON-REMOV (W) (8") (SLD)
(J) 0662 0557 WRK ZN PAV MRK NON-REMOV (W) (24") (SLD)
(K) 0662 0569 WRK ZN PAV MRK NON-REMOV (Y) (4") (SLD)

LEGEND

- PERMANENT CONSTRUCTION THIS PHASE
- PERMANENT CONSTRUCTION PREVIOUS PHASE
- TEMPORARY CONSTRUCTION THIS PHASE
- TEMPORARY CONSTRUCTION PREVIOUS PHASE
- PLASTIC DRUMS
- TRAFFIC LANES
- PCTB — PORTABLE CONCRETE TRAFFIC BARRIER
- XXX XXX — SIGN PLACED IN PREVIOUS PHASE
- RIGHT OF WAY
- P — PERMANENT SIGN

STATE OF TEXAS
JEFFERY T. SEILER
77187
REGISTERED PROFESSIONAL ENGINEER

Jeffery T. Seiler 5-6-99

DATE	BY	REV	REVISION

© 1999 Texas Department of Transportation

Brown & Root
HOUSTON, TEXAS

RODRIGUEZ & HUGGINS, INC.
CONSULTING ENGINEERS
11824 JOLLYVILLE ROAD SUITE 402
AUSTIN, TEXAS 78759
PHONE: 512 335 1754 FAX: 512 335 1799

LOOP 20
TRAFFIC CONTROL PLAN PHASE III

0 25 50 100

SHEET 2 OF 12

FED RD DIV NO	STATE PROJECT NO		SHEET NO
6			170
STATE	STATE DIST NO		COUNTY
TEXAS	22		WEBB
CONT	SECT	JOB	HIGHWAY NO
0086	14	023	LOOP 20

0993\Mlla_Interchange\mll1C502.dgn

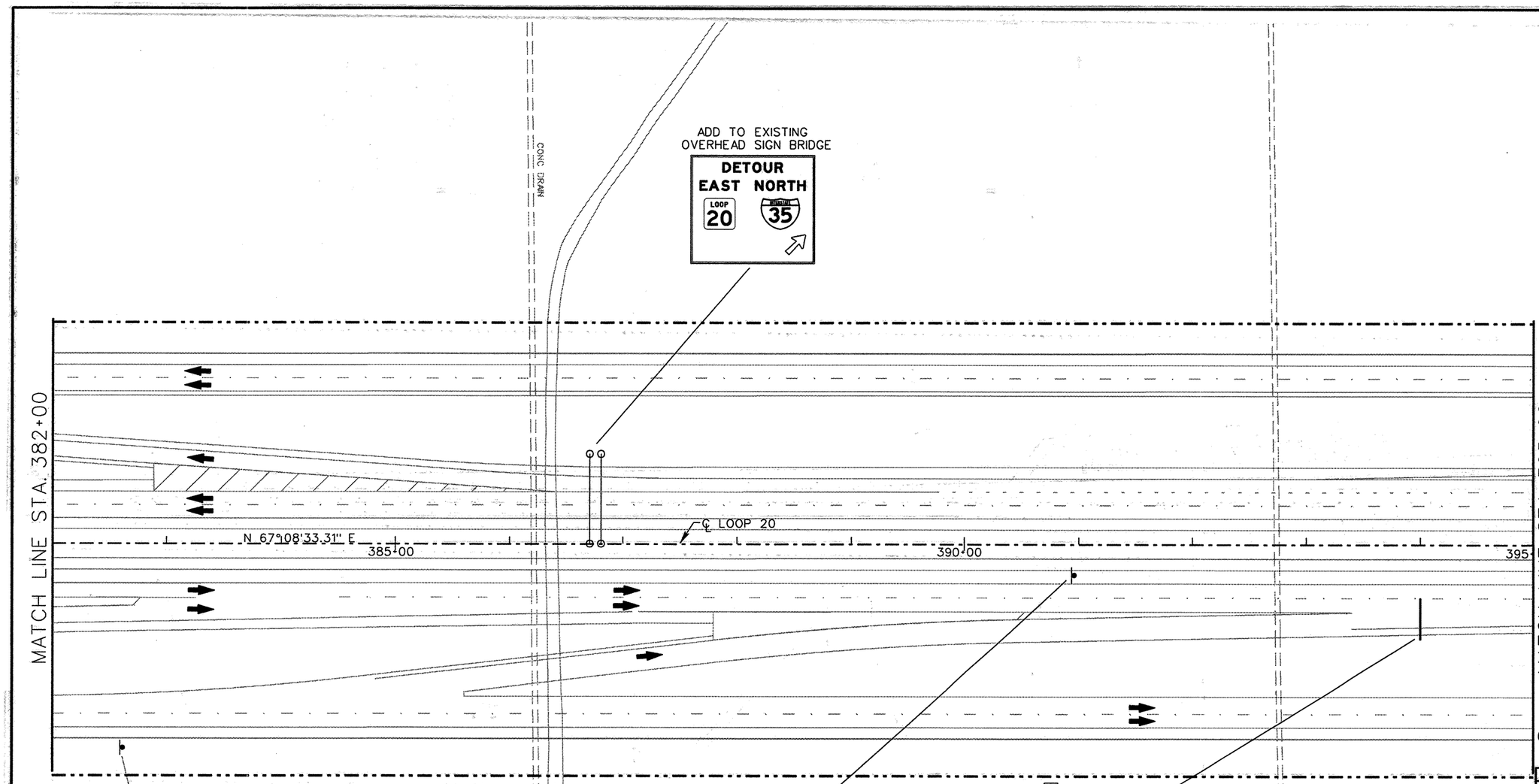

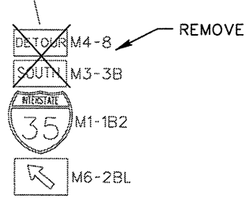

PAVEMENT MARKING LEGEND

(A) 0662 0501 WRK ZN PAV MRK REMOV (W) (4") (SLD)
(B) 0662 0502 WRK ZN PAV MRK REMOV (W) (4") (BRK)
(C) 0662 0507 WRK ZN PAV MRK REMOV (W) (8") (SLD)
(D) 0662 0511 WRK ZN PAV MRK REMOV (W) (24") (SLD)
(E) 0662 0523 WRK ZN PAV MRK REMOV (Y) (4") (SLD)
(F) 0662 0525 WRK ZN PAV MRK REMOV (Y) (4") (DOT)
(G) 0662 0532 WRK ZN PAV MRK REMOV (Y) (24") (SLD)
(H) 0662 0549 WRK ZN PAV MRK NON-REMOV (W) (4") (SLD)
(I) 0662 0553 WRK ZN PAV MRK NON-REMOV (W) (8") (SLD)
(J) 0662 0557 WRK ZN PAV MRK NON-REMOV (W) (24") (SLD)
(K) 0662 0569 WRK ZN PAV MRK NON-REMOV (Y) (4") (SLD)

LEGEND

- PERMANENT CONSTRUCTION THIS PHASE
- PERMANENT CONSTRUCTION PREVIOUS PHASE
- TEMPORARY CONSTRUCTION THIS PHASE
- TEMPORARY CONSTRUCTION PREVIOUS PHASE
- PLASTIC DRUMS
- TRAFFIC LANES
- PCTB — PORTABLE CONCRETE TRAFFIC BARRIER
- XXX XXX — SIGN PLACED IN PREVIOUS PHASE
- RIGHT OF WAY
- P — PERMANENT SIGN

STATE OF TEXAS
JEFFERY T. SEILER
77187
REGISTERED PROFESSIONAL ENGINEER
5-6-99

DATE	BY	REV	REVISION

© 1999 Texas Department of Transportation

Brown & Root
HOUSTON, TEXAS

RODRIGUEZ & HUGGINS, INC.
CONSULTING ENGINEERS
11824 JOLLYVILLE ROAD SUITE 402
AUSTIN, TEXAS 78759
PHONE: 512 335 1754 FAX: 512 335 1799

LOOP 20
TRAFFIC CONTROL PLAN PHASE III

0 25 50 100

SHEET 3 OF 12

FED RD DIV NO	STATE PROJECT NO		SHEET NO
6			171
STATE	STATE DIST NO		COUNTY
TEXAS	22		WEBB
CONT	SECT	JOB	HIGHWAY NO
0086	14	023	LOOP 20

80903\Wdlo_interchange\vrat050A.dgn

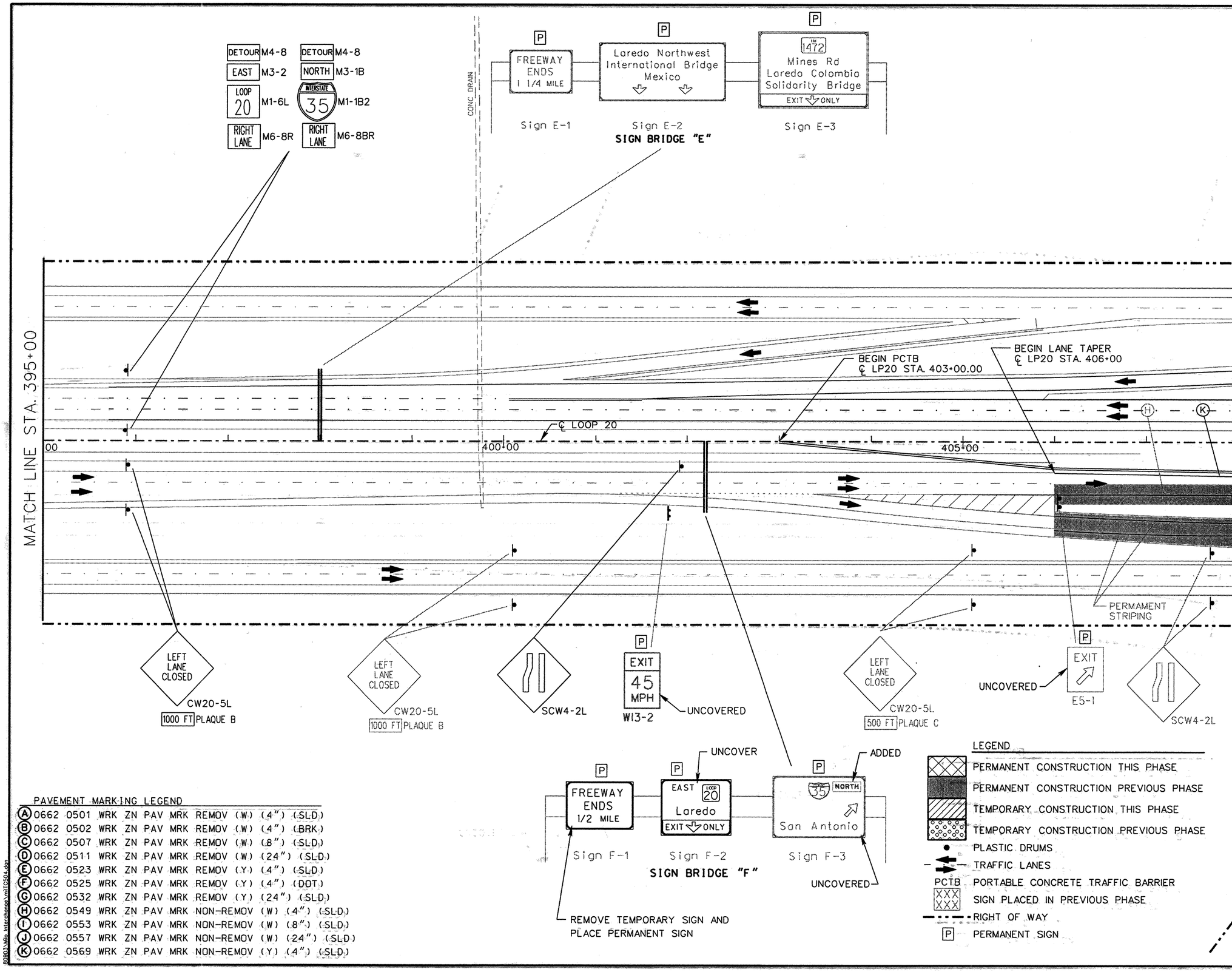

PAVEMENT MARKING LEGEND

A	0662	0501	WRK	ZN	PAV	MRK	REMOV	(W)	(4") (SLD)
B	0662	0502	WRK	ZN	PAV	MRK	REMOV	(W)	(4") (BRK)
C	0662	0507	WRK	ZN	PAV	MRK	REMOV	(W)	(8") (SLD)
D	0662	0511	WRK	ZN	PAV	MRK	REMOV	(W)	(24") (SLD)
E	0662	0523	WRK	ZN	PAV	MRK	REMOV	(Y)	(4") (SLD)
F	0662	0525	WRK	ZN	PAV	MRK	REMOV	(Y)	(4") (DOT)
G	0662	0532	WRK	ZN	PAV	MRK	REMOV	(Y)	(24") (SLD)
H	0662	0549	WRK	ZN	PAV	MRK	NON-REMOV	(W)	(4") (SLD)
I	0662	0553	WRK	ZN	PAV	MRK	NON-REMOV	(W)	(8") (SLD)
J	0662	0557	WRK	ZN	PAV	MRK	NON-REMOV	(W)	(24") (SLD)
K	0662	0569	WRK	ZN	PAV	MRK	NON-REMOV	(Y)	(4") (SLD)

LEGEND

- PERMANENT CONSTRUCTION THIS PHASE
- PERMANENT CONSTRUCTION PREVIOUS PHASE
- TEMPORARY CONSTRUCTION THIS PHASE
- TEMPORARY CONSTRUCTION PREVIOUS PHASE
- PLASTIC DRUMS
- TRAFFIC LANES
- PCTB PORTABLE CONCRETE TRAFFIC BARRIER
- XXX XXX SIGN PLACED IN PREVIOUS PHASE
- RIGHT OF WAY
- P PERMANENT SIGN

STATE OF TEXAS
JEFFERY T. SEILER
77187
REGISTERED PROFESSIONAL ENGINEER

Jeffery T. Seiler
5-12-99

DATE	BY	REV	REVISION

© 1999 Texas Department of Transportation

Brown & Root
HOUSTON, TEXAS

RODRIGUEZ & HUGGINS, INC.
CONSULTING ENGINEERS
11824 JOLLYVILLE ROAD SUITE 402
AUSTIN, TEXAS 78759
PHONE: 512 335 1754 FAX: 512 335 1799

LOOP 20
TRAFFIC CONTROL PLAN PHASE III

0 25 50 100

SHEET 4 OF 12

FED RD DIV NO	STATE PROJECT NO		SHEET NO
6			172
STATE	STATE DIST NO		COUNTY
TEXAS	22		WEBB
CONT	SECT	JOB	HIGHWAY NO
0086	14	023	LOOP 20

80903\Milo Interchange\mITC504.dgn

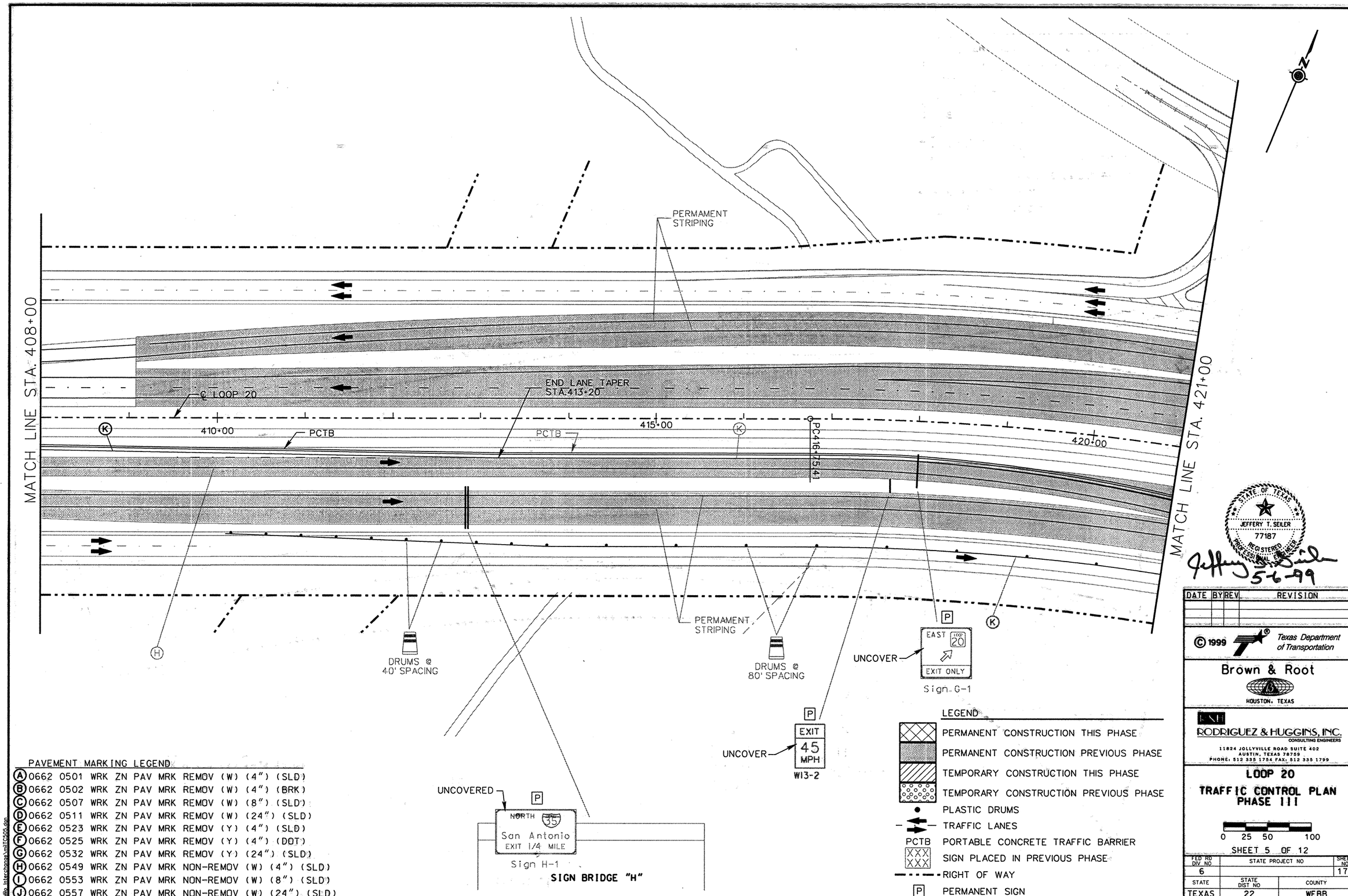

PAVEMENT MARKING LEGEND

A	0662	0501	WRK	ZN	PAV	MRK	REMOV	(W)	(4") (SLD)
B	0662	0502	WRK	ZN	PAV	MRK	REMOV	(W)	(4") (BRK)
C	0662	0507	WRK	ZN	PAV	MRK	REMOV	(W)	(8") (SLD)
D	0662	0511	WRK	ZN	PAV	MRK	REMOV	(W)	(24") (SLD)
E	0662	0523	WRK	ZN	PAV	MRK	REMOV	(Y)	(4") (SLD)
F	0662	0525	WRK	ZN	PAV	MRK	REMOV	(Y)	(4") (DOT)
G	0662	0532	WRK	ZN	PAV	MRK	REMOV	(Y)	(24") (SLD)
H	0662	0549	WRK	ZN	PAV	MRK	NON-REMOV	(W)	(4") (SLD)
I	0662	0553	WRK	ZN	PAV	MRK	NON-REMOV	(W)	(8") (SLD)
J	0662	0557	WRK	ZN	PAV	MRK	NON-REMOV	(W)	(24") (SLD)
K	0662	0569	WRK	ZN	PAV	MRK	NON-REMOV	(Y)	(4") (SLD)

LEGEND

- PERMANENT CONSTRUCTION THIS PHASE
- PERMANENT CONSTRUCTION PREVIOUS PHASE
- TEMPORARY CONSTRUCTION THIS PHASE
- TEMPORARY CONSTRUCTION PREVIOUS PHASE
- PLASTIC DRUMS
- TRAFFIC LANES
- PCTB PORTABLE CONCRETE TRAFFIC BARRIER
- XXX SIGN PLACED IN PREVIOUS PHASE
- RIGHT OF WAY
- P PERMANENT SIGN

STATE OF TEXAS
JEFFERY T. SEILER
77187
REGISTERED PROFESSIONAL ENGINEER

Jeffery T. Seiler 5-6-99

DATE	BY	REV	REVISION

© 1999 Texas Department of Transportation

Brown & Root
HOUSTON, TEXAS

RODRIGUEZ & HUGGINS, INC.
CONSULTING ENGINEERS
11824 JOLLYVILLE ROAD SUITE 402
AUSTIN, TEXAS 78759
PHONE: 512 335 1754 FAX: 512 335 1799

LOOP 20
TRAFFIC CONTROL PLAN
PHASE III

0 25 50 100

SHEET 5 OF 12

FED RD DIV NO	STATE PROJECT NO		SHEET NO
6			173
STATE	STATE DIST NO		COUNTY
TEXAS	22		WEBB
CONT	SECT	JOB	HIGHWAY NO
0086	14	023	LOOP 20

80903\Mlo Interchange\mlTC505.dgn

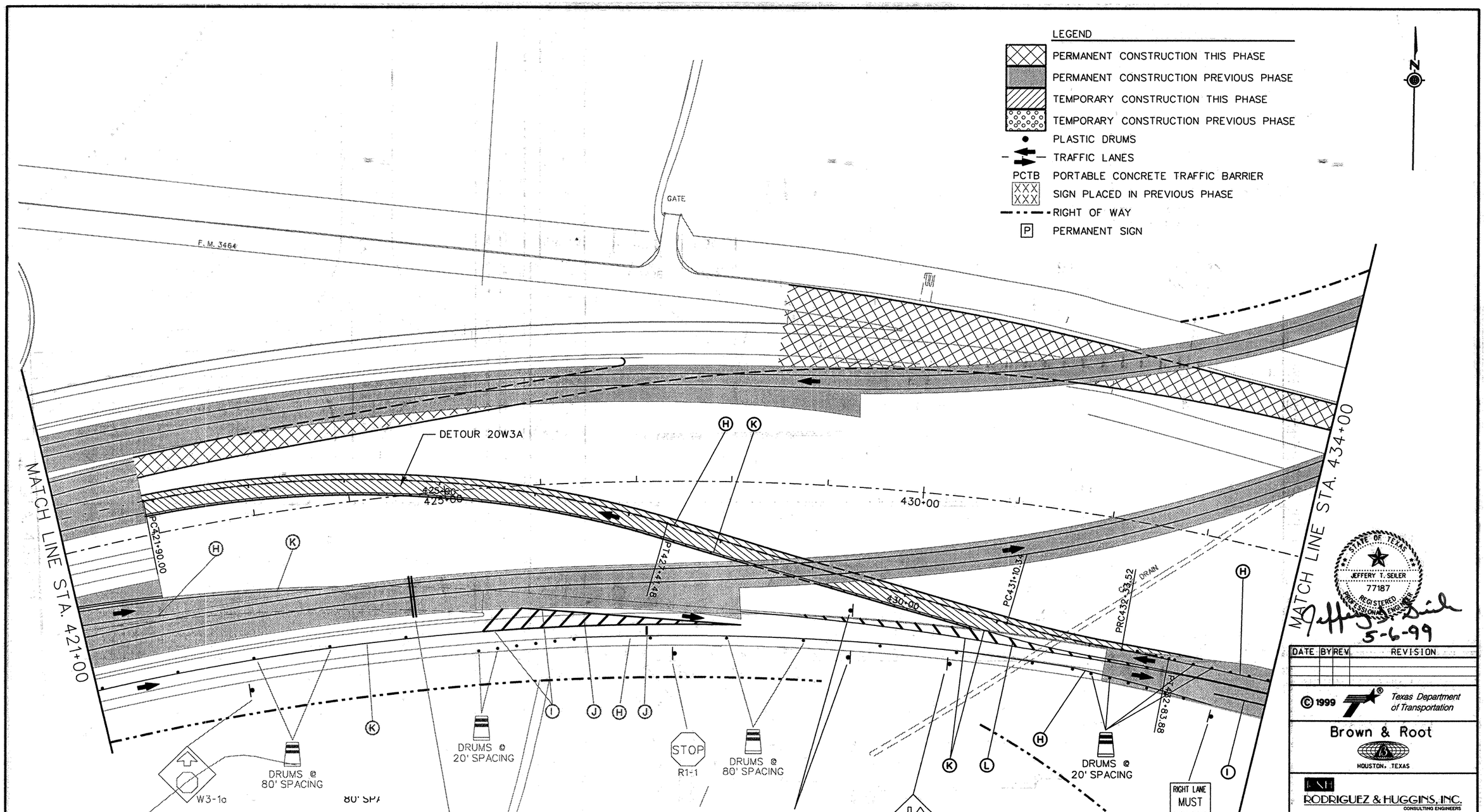

PAVEMENT MARKING LEGEND

A	0662	0501	WRK	ZN	PAV	MRK	REMOV	(W)	(4") (SLD)
B	0662	0502	WRK	ZN	PAV	MRK	REMOV	(W)	(4") (BRK)
C	0662	0507	WRK	ZN	PAV	MRK	REMOV	(W)	(8") (SLD)
D	0662	0511	WRK	ZN	PAV	MRK	REMOV	(W)	(24") (SLD)
E	0662	0523	WRK	ZN	PAV	MRK	REMOV	(Y)	(4") (SLD)
F	0662	0525	WRK	ZN	PAV	MRK	REMOV	(Y)	(4") (DOT)
G	0662	0532	WRK	ZN	PAV	MRK	REMOV	(Y)	(24") (SLD)
H	0662	0549	WRK	ZN	PAV	MRK	NON-REMOV	(W)	(4") (SLD)
I	0662	0553	WRK	ZN	PAV	MRK	NON-REMOV	(W)	(8") (SLD)
J	0662	0557	WRK	ZN	PAV	MRK	NON-REMOV	(W)	(24") (SLD)
K	0662	0569	WRK	ZN	PAV	MRK	NON-REMOV	(Y)	(4") (SLD)
L	0662	0569	WRK	ZN	PAV	MRK	NON-REMOV	(Y)	(24") (SLD)

80903\Mio Interchange\miTC506.dgn

STATE OF TEXAS
JEFFERY T. SEILER
77187
REGISTERED PROFESSIONAL ENGINEER

Jeffery T. Seiler
5-6-99

DATE	BY	REV	REVISION

© 1999 Texas Department of Transportation

Brown & Root
HOUSTON, TEXAS

RODRIGUEZ & HUGGINS, INC.
CONSULTING ENGINEERS
11824 JOLLYVILLE ROAD SUITE 402
AUSTIN, TEXAS 78759
PHONE: 512 335 1754 FAX: 512 335 1799

LOOP 20
TRAFFIC CONTROL PLAN PHASE III

0 25 50 100

SHEET 6 OF 12

FED RD DIV NO	STATE PROJECT NO		SHEET NO
6			174
STATE	STATE DIST NO		COUNTY
TEXAS	22		WEBB
CONT	SECT	JOB	HIGHWAY NO
0086	14	023	LOOP 20

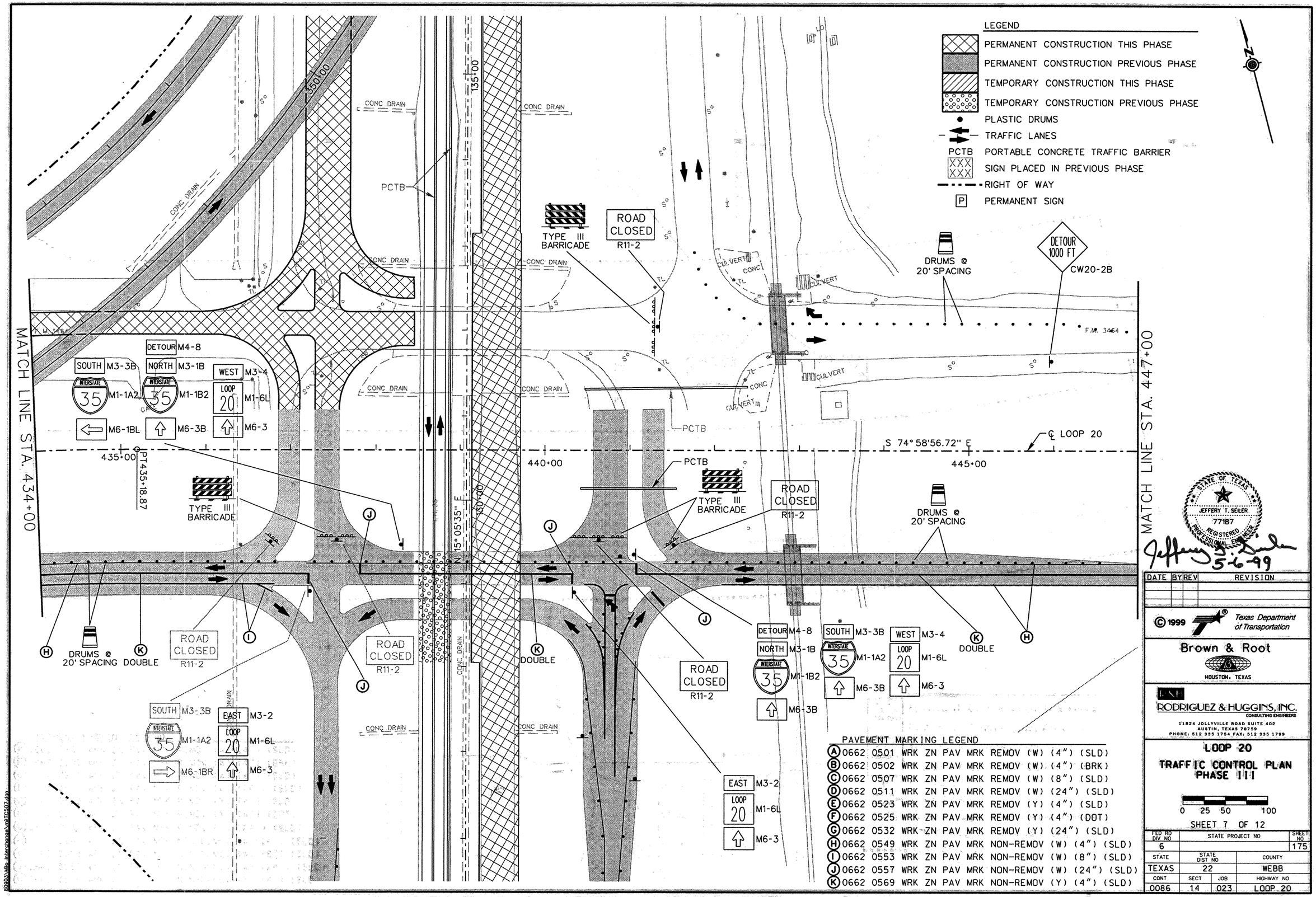

PAVEMENT MARKING LEGEND

A	0662	0501	WRK	ZN	PAV	MRK	REMOV	(W)	(4") (SLD)
B	0662	0502	WRK	ZN	PAV	MRK	REMOV	(W)	(4") (BRK)
C	0662	0507	WRK	ZN	PAV	MRK	REMOV	(W)	(8") (SLD)
D	0662	0511	WRK	ZN	PAV	MRK	REMOV	(W)	(24") (SLD)
E	0662	0523	WRK	ZN	PAV	MRK	REMOV	(Y)	(4") (SLD)
F	0662	0525	WRK	ZN	PAV	MRK	REMOV	(Y)	(4") (DOT)
G	0662	0532	WRK	ZN	PAV	MRK	REMOV	(Y)	(24") (SLD)
H	0662	0549	WRK	ZN	PAV	MRK	NON-REMOV	(W)	(4") (SLD)
I	0662	0553	WRK	ZN	PAV	MRK	NON-REMOV	(W)	(8") (SLD)
J	0662	0557	WRK	ZN	PAV	MRK	NON-REMOV	(W)	(24") (SLD)
K	0662	0569	WRK	ZN	PAV	MRK	NON-REMOV	(Y)	(4") (SLD)

DATE	BY	REV	REVISION

© 1999 Texas Department of Transportation

Brown & Root
HOUSTON, TEXAS

RODRIGUEZ & HUGGINS, INC.
CONSULTING ENGINEERS
11824 JOLLYVILLE ROAD SUITE 402
AUSTIN, TEXAS 78759
PHONE: 512 335 1754 FAX: 512 335 1799

LOOP 20
TRAFFIC CONTROL PLAN
PHASE III

0 25 50 100

SHEET 7 OF 12

FED RD DIV NO	STATE PROJECT NO		SHEET NO
6			175
STATE	STATE DIST NO		COUNTY
TEXAS	22		WEBB
CONT	SECT	JOB	HIGHWAY NO
0086	14	023	LOOP 20

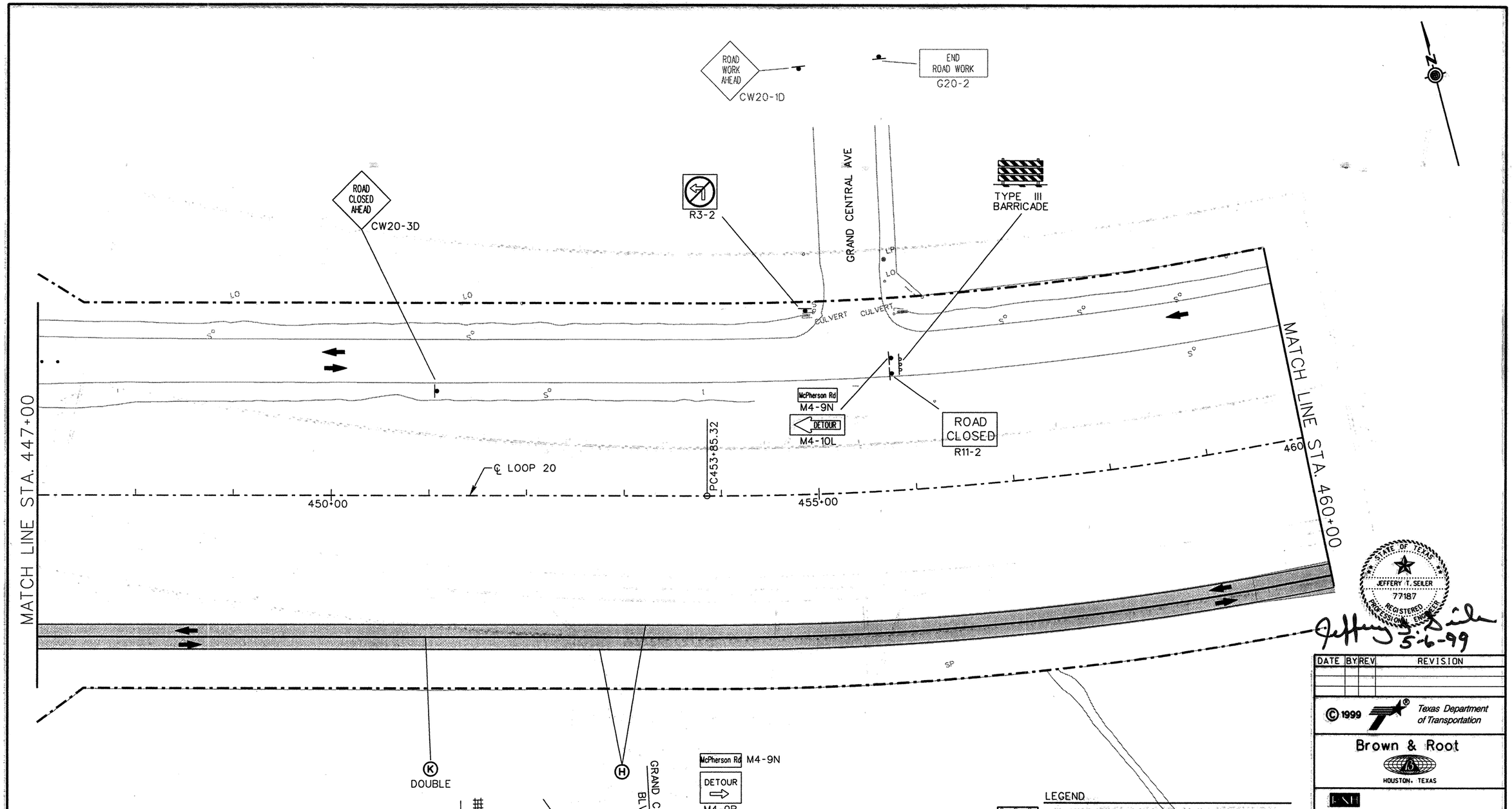

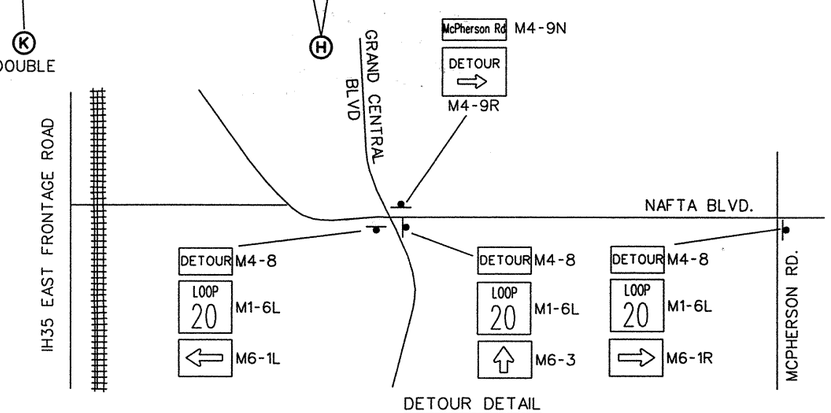

DETOUR DETAIL

PAVEMENT MARKING LEGEND

A	0662 0501 WRK ZN PAV MRK REMOV (W) (4") (SLD)
B	0662 0502 WRK ZN PAV MRK REMOV (W) (4") (BRK)
C	0662 0507 WRK ZN PAV MRK REMOV (W) (8") (SLD)
D	0662 0511 WRK ZN PAV MRK REMOV (W) (24") (SLD)
E	0662 0523 WRK ZN PAV MRK REMOV (Y) (4") (SLD)
F	0662 0525 WRK ZN PAV MRK REMOV (Y) (4") (DOT)
G	0662 0532 WRK ZN PAV MRK REMOV (Y) (24") (SLD)
H	0662 0549 WRK ZN PAV MRK NON-REMOV (W) (4") (SLD)
I	0662 0553 WRK ZN PAV MRK NON-REMOV (W) (8") (SLD)
J	0662 0557 WRK ZN PAV MRK NON-REMOV (W) (24") (SLD)
K	0662 0569 WRK ZN PAV MRK NON-REMOV (Y) (4") (SLD)

LEGEND

- PERMANENT CONSTRUCTION THIS PHASE
- PERMANENT CONSTRUCTION PREVIOUS PHASE
- TEMPORARY CONSTRUCTION THIS PHASE
- TEMPORARY CONSTRUCTION PREVIOUS PHASE
- PLASTIC DRUMS
- TRAFFIC LANES
- PCTB PORTABLE CONCRETE TRAFFIC BARRIER
- XXX SIGN PLACED IN PREVIOUS PHASE
- RIGHT OF WAY
- P PERMANENT SIGN

STATE OF TEXAS
JEFFERY T. SEILER
77187
REGISTERED PROFESSIONAL ENGINEER

Jeffery T. Seiler 5-6-99

DATE	BY	REV	REVISION

© 1999 Texas Department of Transportation

Brown & Root
HOUSTON, TEXAS

RODRIGUEZ & HUGGINS, INC.
CONSULTING ENGINEERS
11824 JOLLYVILLE ROAD SUITE 402
AUSTIN, TEXAS 78759
PHONE: 512 335 1754 FAX: 512 335 1799

LOOP 20
TRAFFIC CONTROL PLAN PHASE III

0 25 50 100

SHEET 8 OF 12

FED RD DIV NO	STATE PROJECT NO		SHEET NO
6			176
STATE	STATE DIST NO		COUNTY
TEXAS	22		WEBB
CONT	SECT	JOB	HIGHWAY NO
0086	14	023	LOOP 20

80903\Mfg_Interchange\miTC508.dgn

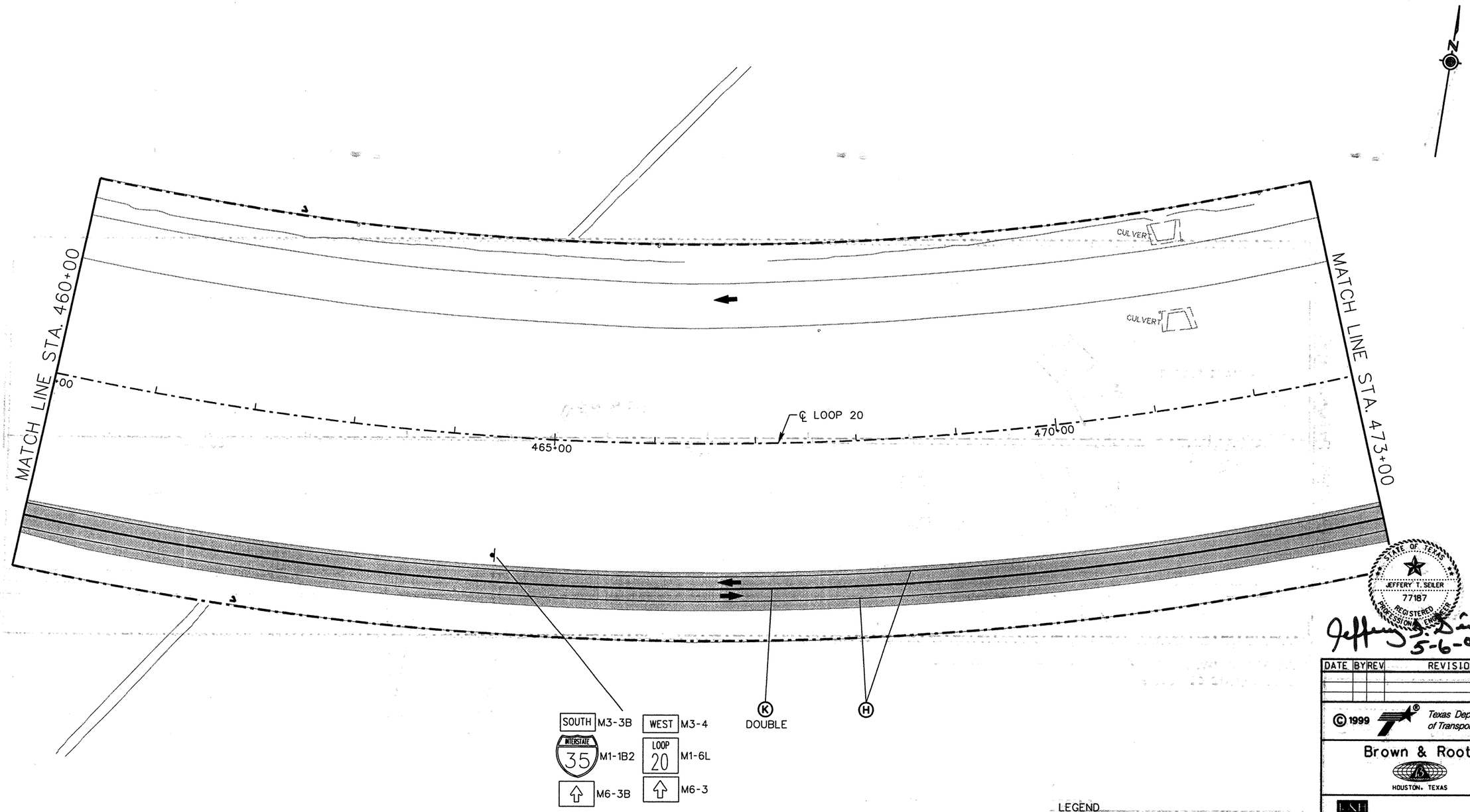

PAVEMENT MARKING LEGEND

(A) 0662 0501 WRK ZN PAV MRK REMOV (W) (4") (SLD)
(B) 0662 0502 WRK ZN PAV MRK REMOV (W) (4") (BRK)
(C) 0662 0507 WRK ZN PAV MRK REMOV (W) (8") (SLD)
(D) 0662 0511 WRK ZN PAV MRK REMOV (W) (24") (SLD)
(E) 0662 0523 WRK ZN PAV MRK REMOV (Y) (4") (SLD)
(F) 0662 0525 WRK ZN PAV MRK REMOV (Y) (4") (DOT)
(G) 0662 0532 WRK ZN PAV MRK REMOV (Y) (24") (SLD)
(H) 0662 0549 WRK ZN PAV MRK NON-REMOV (W) (4") (SLD)
(I) 0662 0553 WRK ZN PAV MRK NON-REMOV (W) (8") (SLD)
(J) 0662 0557 WRK ZN PAV MRK NON-REMOV (W) (24") (SLD)
(K) 0662 0569 WRK ZN PAV MRK NON-REMOV (Y) (4") (SLD)

LEGEND

- PERMANENT CONSTRUCTION THIS PHASE
- PERMANENT CONSTRUCTION PREVIOUS PHASE
- TEMPORARY CONSTRUCTION THIS PHASE
- TEMPORARY CONSTRUCTION PREVIOUS PHASE
- PLASTIC DRUMS
- TRAFFIC LANES
- PCTB PORTABLE CONCRETE TRAFFIC BARRIER
- XXX XXX SIGN PLACED IN PREVIOUS PHASE
- RIGHT OF WAY
- P PERMANENT SIGN

STATE OF TEXAS
JEFFERY T. SEILER
77187
REGISTERED PROFESSIONAL ENGINEER

Jeffery T. Seiler
5-6-99

DATE	BY	REV	REVISION

© 1999 Texas Department of Transportation

Brown & Root
HOUSTON, TEXAS

RODRIGUEZ & HUGGINS, INC.
CONSULTING ENGINEERS
11824 JOLLYVILLE ROAD SUITE 402
AUSTIN, TEXAS 78759
PHONE: 512 335 1754 FAX: 512 335 1799

LOOP 20
TRAFFIC CONTROL PLAN PHASE III

0 25 50 100

SHEET 9 OF 12

FED RD DIV NO	STATE PROJECT NO		SHEET NO
6			177
STATE	STATE DIST NO		COUNTY
TEXAS	22		WEBB
CONT	SECT	JOB	HIGHWAY NO
0086	14	023	LOOP 20

80903\Milo Interchange\milTC509.dgn

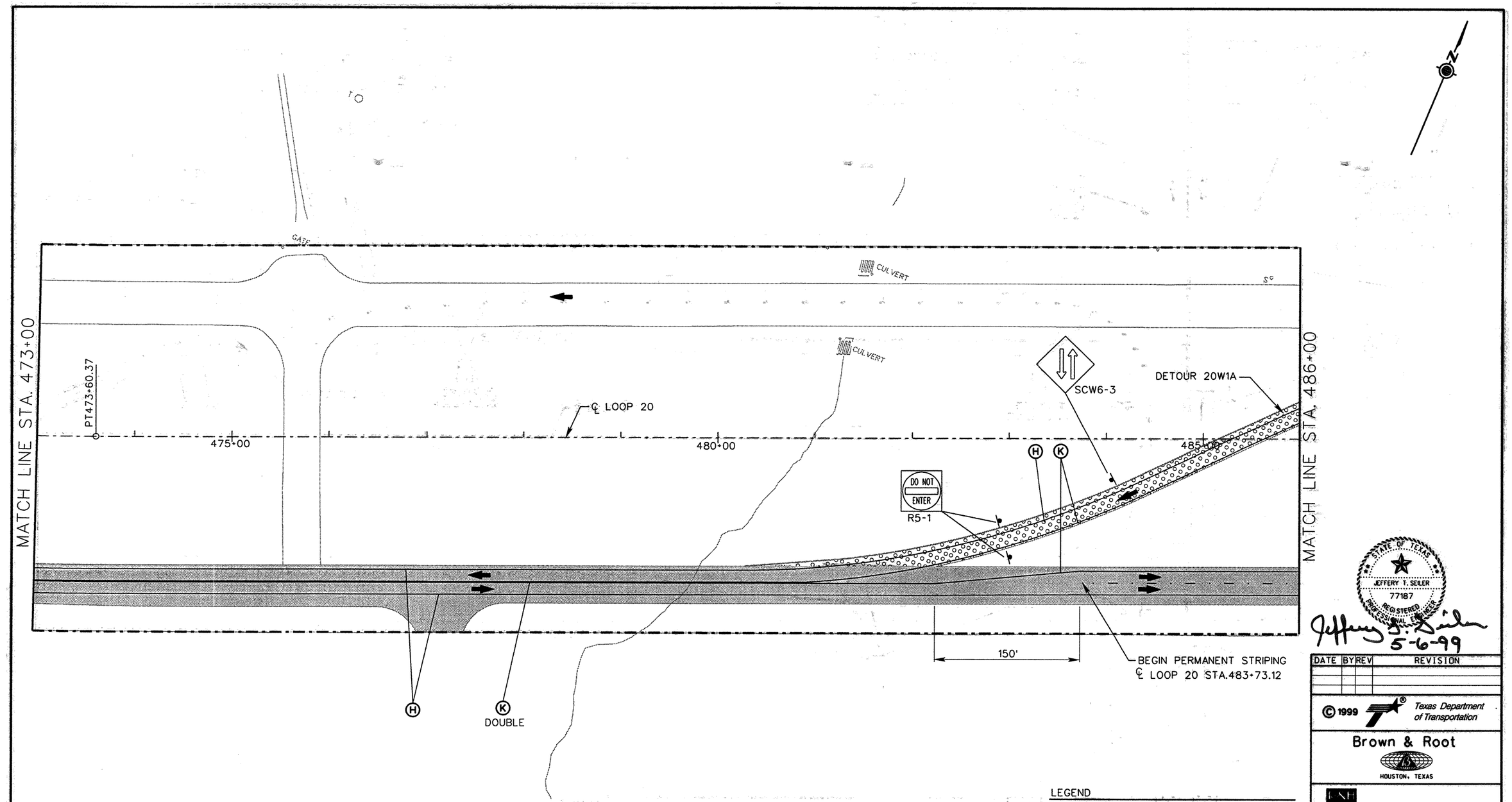

PAVEMENT MARKING LEGEND

(A) 0662 0501 WRK ZN PAV MRK REMOV (W) (4") (SLD)
(B) 0662 0502 WRK ZN PAV MRK REMOV (W) (4") (BRK)
(C) 0662 0507 WRK ZN PAV MRK REMOV (W) (8") (SLD)
(D) 0662 0511 WRK ZN PAV MRK REMOV (W) (24") (SLD)
(E) 0662 0523 WRK ZN PAV MRK REMOV (Y) (4") (SLD)
(F) 0662 0525 WRK ZN PAV MRK REMOV (Y) (4") (DOT)
(G) 0662 0532 WRK ZN PAV MRK REMOV (Y) (24") (SLD)
(H) 0662 0549 WRK ZN PAV MRK NON-REMOV (W) (4") (SLD)
(I) 0662 0553 WRK ZN PAV MRK NON-REMOV (W) (8") (SLD)
(J) 0662 0557 WRK ZN PAV MRK NON-REMOV (W) (24") (SLD)
(K) 0662 0569 WRK ZN PAV MRK NON-REMOV (Y) (4") (SLD)

LEGEND

- PERMANENT CONSTRUCTION THIS PHASE
- PERMANENT CONSTRUCTION PREVIOUS PHASE
- TEMPORARY CONSTRUCTION THIS PHASE
- TEMPORARY CONSTRUCTION PREVIOUS PHASE
- PLASTIC DRUMS
- TRAFFIC LANES
- PCTB — PORTABLE CONCRETE TRAFFIC BARRIER
- XXX XXX — SIGN PLACED IN PREVIOUS PHASE
- RIGHT OF WAY
- P — PERMANENT SIGN

STATE OF TEXAS
JEFFERY T. SEILER
77187
REGISTERED PROFESSIONAL ENGINEER

Jeffery T. Seiler
5-6-99

DATE	BY	REV	REVISION

© 1999 Texas Department of Transportation

Brown & Root
HOUSTON, TEXAS

RODRIGUEZ & HUGGINS, INC.
CONSULTING ENGINEERS
11824 JOLLYVILLE ROAD SUITE 402
AUSTIN, TEXAS 78759
PHONE: 512 335 1754 FAX: 512 335 1799

LOOP 20
TRAFFIC CONTROL PLAN PHASE III

0 25 50 100

SHEET 10 OF 12

FED RD DIV NO	STATE PROJECT NO		SHEET NO
6			178
STATE	STATE DIST NO		COUNTY
TEXAS	22		WEBB
CONT	SECT	JOB	HIGHWAY NO
0086	14	023	LOOP 20

80903\Wilo_Interchange\mslTC510.dgn

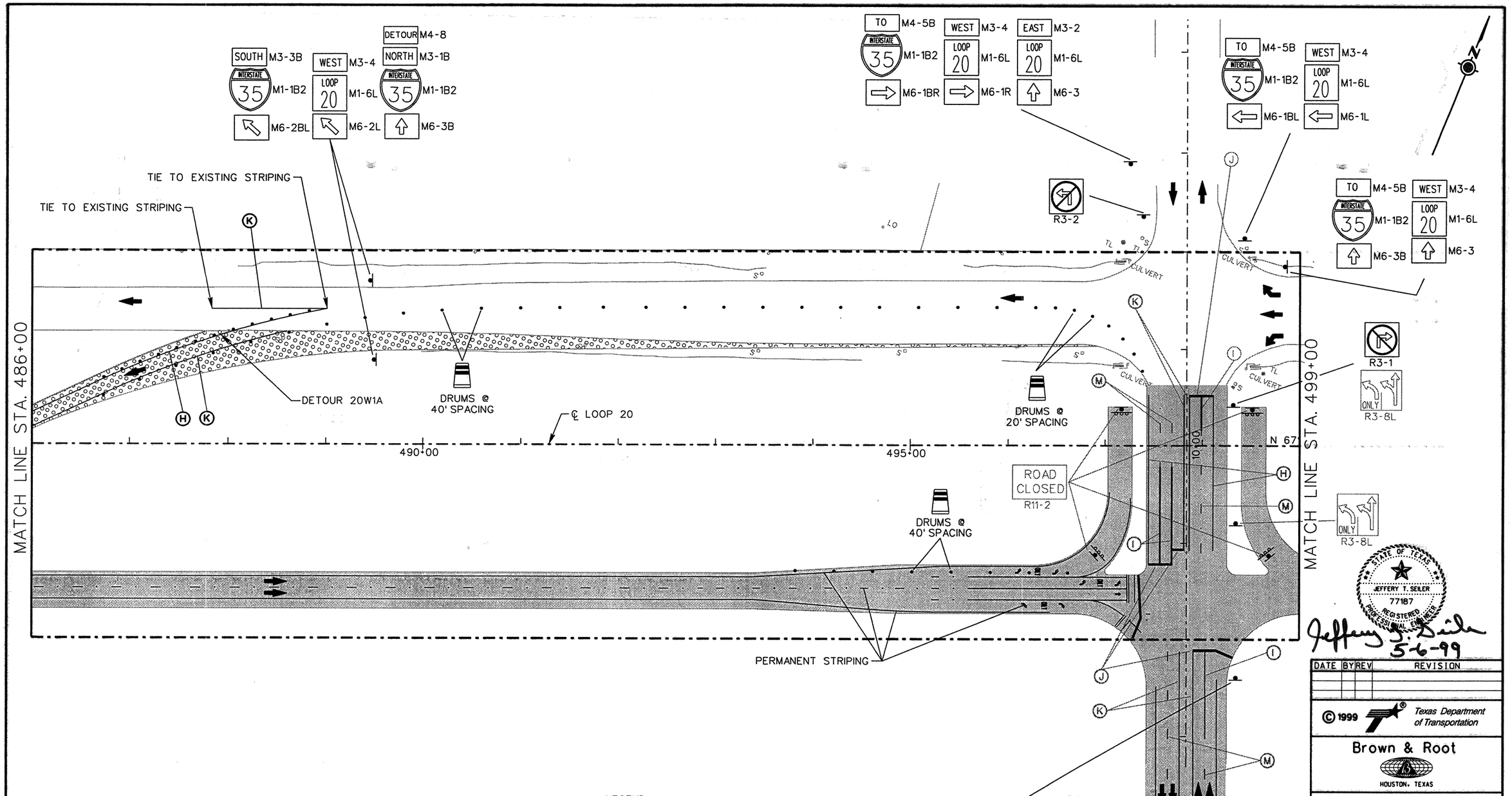

PAVEMENT MARKING LEGEND

(A)	0662	0501	WRK ZN PAV MRK	REMOV	(W)	(4")	(SLD)
(B)	0662	0502	WRK ZN PAV MRK	REMOV	(W)	(4")	(BRK)
(C)	0662	0507	WRK ZN PAV MRK	REMOV	(W)	(8")	(SLD)
(D)	0662	0511	WRK ZN PAV MRK	REMOV	(W)	(24")	(SLD)
(E)	0662	0523	WRK ZN PAV MRK	REMOV	(Y)	(4")	(SLD)
(F)	0662	0525	WRK ZN PAV MRK	REMOV	(Y)	(4")	(DOT)
(G)	0662	0532	WRK ZN PAV MRK	REMOV	(Y)	(24")	(SLD)
(H)	0662	0549	WRK ZN PAV MRK	NON-REMOV	(W)	(4")	(SLD)
(I)	0662	0553	WRK ZN PAV MRK	NON-REMOV	(W)	(8")	(SLD)
(J)	0662	0557	WRK ZN PAV MRK	NON-REMOV	(W)	(24")	(SLD)
(K)	0662	0569	WRK ZN PAV MRK	NON-REMOV	(Y)	(4")	(SLD)
(M)	0662	0550	WRK ZN PAV MRK	NON-REMOV	(W)	(4")	(BRK)

LEGEND

- PERMANENT CONSTRUCTION THIS PHASE
- PERMANENT CONSTRUCTION PREVIOUS PHASE
- TEMPORARY CONSTRUCTION THIS PHASE
- TEMPORARY CONSTRUCTION PREVIOUS PHASE
- PLASTIC DRUMS
- TRAFFIC LANES
- PCTB — PORTABLE CONCRETE TRAFFIC BARRIER
- SIGN PLACED IN PREVIOUS PHASE
- RIGHT OF WAY
- P — PERMANENT SIGN

TO M4-5B | WEST M3-4 | EAST M3-2
INTERSTATE 35 M1-1B2 | LOOP 20 M1-6L | LOOP 20 M1-6L
M6-3B | M6-3 | M6-1R

STATE OF TEXAS
JEFFERY T. SEILER
77187
REGISTERED PROFESSIONAL ENGINEER

Jeffery T. Seiler
5-6-99

DATE	BY	REV	REVISION

© 1999 Texas Department of Transportation

Brown & Root
HOUSTON, TEXAS

RODRIGUEZ & HUGGINS, INC.
CONSULTING ENGINEERS
11824 JOLLYVILLE ROAD SUITE 402
AUSTIN, TEXAS 78759
PHONE: 512 335 1754 FAX: 512 335 1799

LOOP 20

TRAFFIC CONTROL PLAN
PHASE III

0 25 50 100

SHEET 11 OF 12

FED RD DIV NO	STATE PROJECT NO		SHEET NO
6			179
STATE	STATE DIST NO		COUNTY
TEXAS	22		WEBB
CONT	SECT	JOB	HIGHWAY NO
0086	14	023	LOOP 20

8020A Villa_Interchange\mil\TC511.dgn

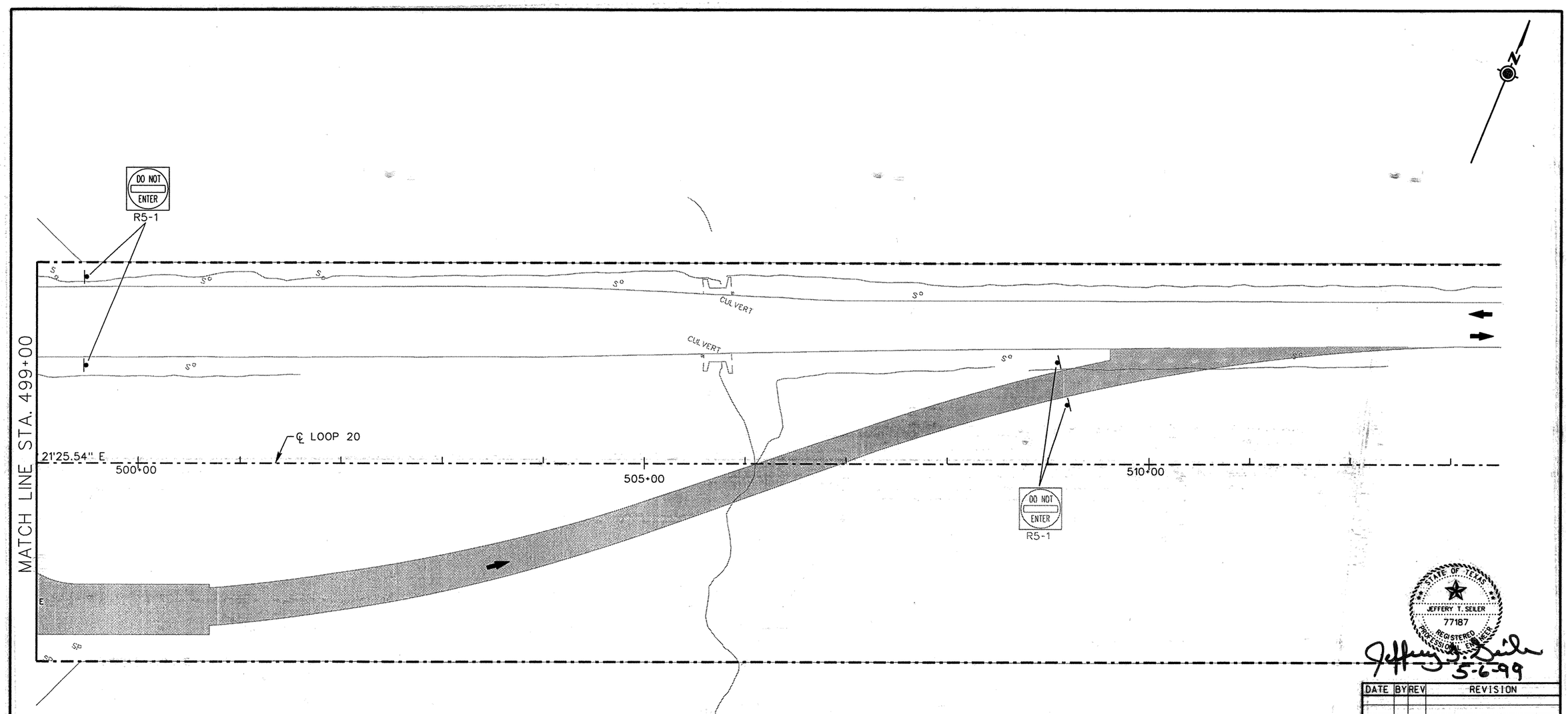

PAVEMENT MARKING LEGEND

A	0662	0501	WRK	ZN	PAV	MRK	REMOV	(W)	(4")	(SLD)
B	0662	0502	WRK	ZN	PAV	MRK	REMOV	(W)	(4")	(BRK)
C	0662	0507	WRK	ZN	PAV	MRK	REMOV	(W)	(8")	(SLD)
D	0662	0511	WRK	ZN	PAV	MRK	REMOV	(W)	(24")	(SLD)
E	0662	0523	WRK	ZN	PAV	MRK	REMOV	(Y)	(4")	(SLD)
F	0662	0525	WRK	ZN	PAV	MRK	REMOV	(Y)	(4")	(DOT)
G	0662	0532	WRK	ZN	PAV	MRK	REMOV	(Y)	(24")	(SLD)
H	0662	0549	WRK	ZN	PAV	MRK	NON-REMOV	(W)	(4")	(SLD)
I	0662	0553	WRK	ZN	PAV	MRK	NON-REMOV	(W)	(8")	(SLD)
J	0662	0557	WRK	ZN	PAV	MRK	NON-REMOV	(W)	(24")	(SLD)
K	0662	0569	WRK	ZN	PAV	MRK	NON-REMOV	(Y)	(4")	(SLD)

LEGEND

- PERMANENT CONSTRUCTION THIS PHASE
- PERMANENT CONSTRUCTION PREVIOUS PHASE
- TEMPORARY CONSTRUCTION THIS PHASE
- TEMPORARY CONSTRUCTION PREVIOUS PHASE
- PLASTIC DRUMS
- TRAFFIC LANES
- PCTB PORTABLE CONCRETE TRAFFIC BARRIER
- XXX SIGN PLACED IN PREVIOUS PHASE
- RIGHT OF WAY
- P PERMANENT SIGN

STATE OF TEXAS
JEFFERY T. SEILER
77187
REGISTERED PROFESSIONAL ENGINEER

Jeffery T. Seiler
5-6-99

DATE	BY	REV	REVISION

© 1999 Texas Department of Transportation

Brown & Root
HOUSTON, TEXAS

RODRIGUEZ & HUGGINS, INC.
CONSULTING ENGINEERS
11824 JOLLYVILLE ROAD SUITE 402
AUSTIN, TEXAS 78759
PHONE: 512 335 1754 FAX: 512 335 1799

LOOP 20
TRAFFIC CONTROL PLAN
PHASE III

0 25 50 100

SHEET 12 OF 12

FED RD DIV NO	STATE PROJECT NO		SHEET NO
6			180
STATE	STATE DIST NO		COUNTY
TEXAS	22		WEBB
CONT	SECT	JOB	HIGHWAY NO
0086	14	023	LOOP 20

80903\Milo Interchange\milTC512.dgn

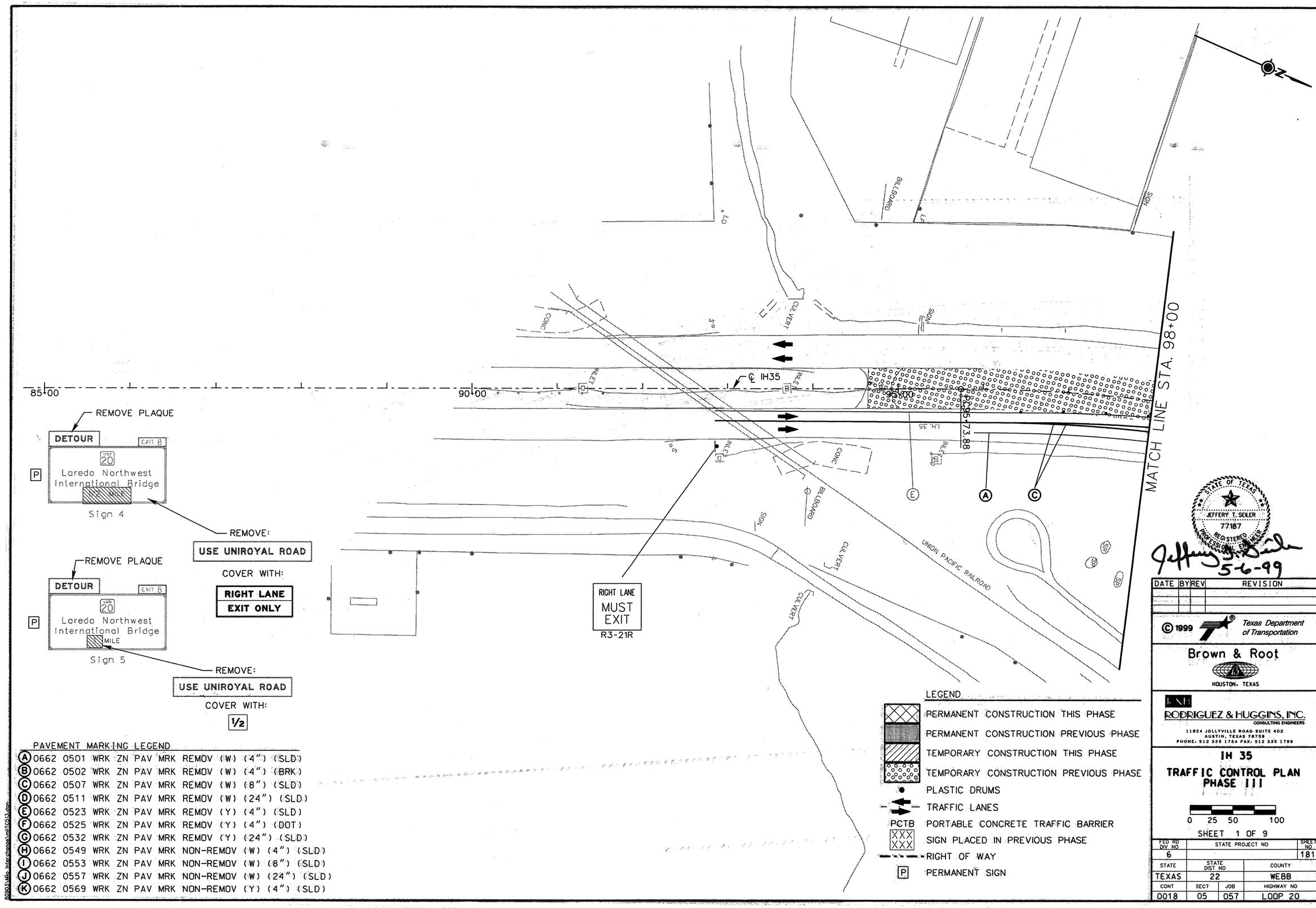

PAVEMENT MARKING LEGEND

A	0662 0501 WRK ZN PAV MRK REMOV (W) (4") (SLD)
B	0662 0502 WRK ZN PAV MRK REMOV (W) (4") (BRK)
C	0662 0507 WRK ZN PAV MRK REMOV (W) (8") (SLD)
D	0662 0511 WRK ZN PAV MRK REMOV (W) (24") (SLD)
E	0662 0523 WRK ZN PAV MRK REMOV (Y) (4") (SLD)
F	0662 0525 WRK ZN PAV MRK REMOV (Y) (4") (DOT)
G	0662 0532 WRK ZN PAV MRK REMOV (Y) (24") (SLD)
H	0662 0549 WRK ZN PAV MRK NON-REMOV (W) (4") (SLD)
I	0662 0553 WRK ZN PAV MRK NON-REMOV (W) (8") (SLD)
J	0662 0557 WRK ZN PAV MRK NON-REMOV (W) (24") (SLD)
K	0662 0569 WRK ZN PAV MRK NON-REMOV (Y) (4") (SLD)

STATE OF TEXAS
JEFFERY T. SEILER
77187
REGISTERED PROFESSIONAL ENGINEER

Jeffery T. Seiler
5-6-99

DATE	BY	REV	REVISION

© 1999 Texas Department of Transportation

Brown & Root
HOUSTON, TEXAS

RODRIGUEZ & HUGGINS, INC.
CONSULTING ENGINEERS
11824 JOLLYVILLE ROAD SUITE 402
AUSTIN, TEXAS 78759
PHONE: 512 335 1754 FAX: 512 335 1799

IH 35
TRAFFIC CONTROL PLAN PHASE III

0 25 50 100

SHEET 1 OF 9

FED RD DIV NO	STATE PROJECT NO		SHEET NO
6			181
STATE	STATE DIST NO		COUNTY
TEXAS	22		WEBB
CONT	SECT	JOB	HIGHWAY NO
0018	05	057	LOOP 20

80903\Mio_Interchange\miTC513.dgn

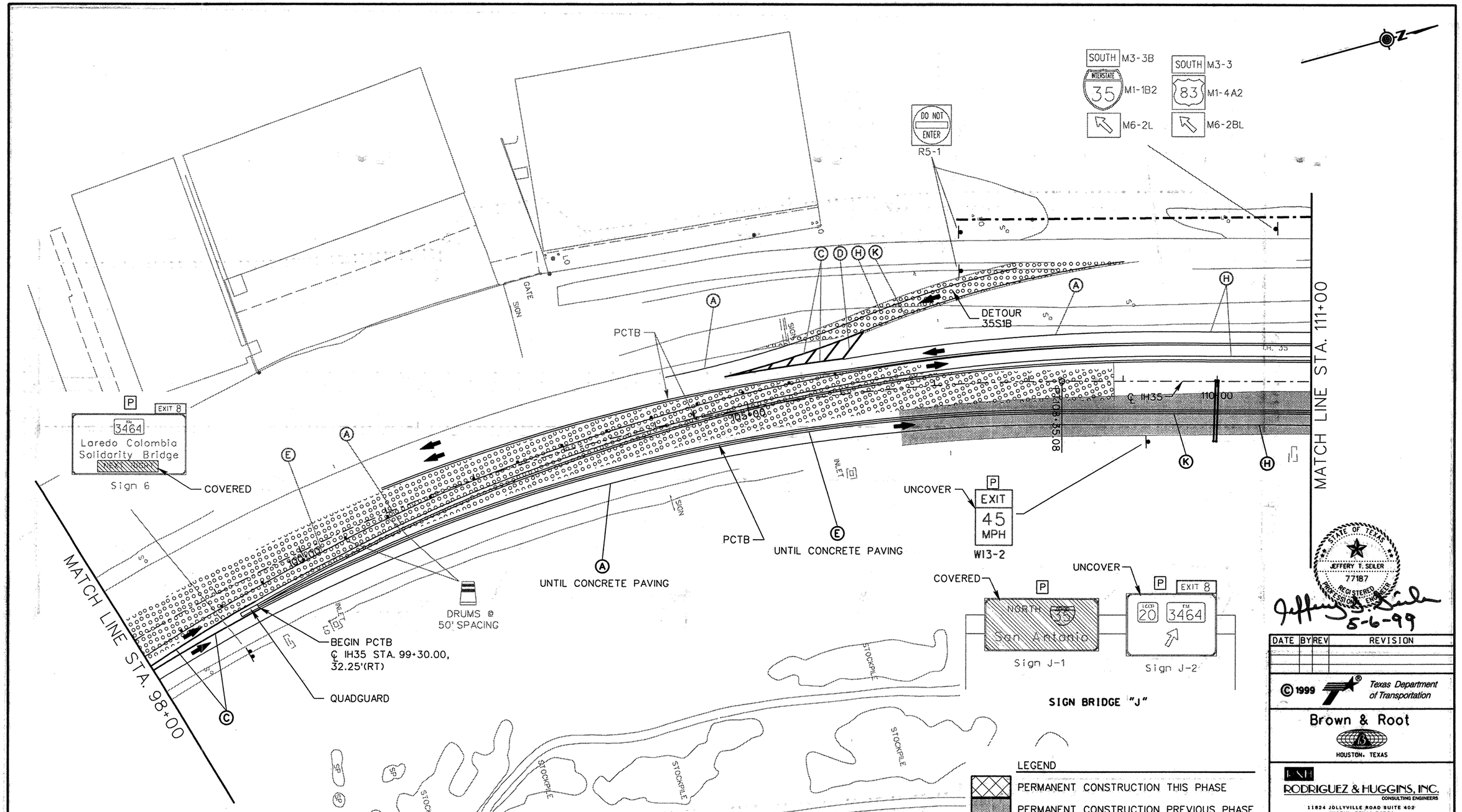

PAVEMENT MARKING LEGEND

(A)	0662	0501	WRK ZN PAV MRK REMOV	(W)	(4")	(SLD)
(B)	0662	0502	WRK ZN PAV MRK REMOV	(W)	(4")	(BRK)
(C)	0662	0507	WRK ZN PAV MRK REMOV	(W)	(8")	(SLD)
(D)	0662	0511	WRK ZN PAV MRK REMOV	(W)	(24")	(SLD)
(E)	0662	0523	WRK ZN PAV MRK REMOV	(Y)	(4")	(SLD)
(F)	0662	0525	WRK ZN PAV MRK REMOV	(Y)	(4")	(DOT)
(G)	0662	0532	WRK ZN PAV MRK REMOV	(Y)	(24")	(SLD)
(H)	0662	0549	WRK ZN PAV MRK NON-REMOV	(W)	(4")	(SLD)
(I)	0662	0553	WRK ZN PAV MRK NON-REMOV	(W)	(8")	(SLD)
(J)	0662	0557	WRK ZN PAV MRK NON-REMOV	(W)	(24")	(SLD
(K)	0662	0569	WRK ZN PAV MRK NON-REMOV	(Y)	(4")	(SLD)

LEGEND

- PERMANENT CONSTRUCTION THIS PHASE
- PERMANENT CONSTRUCTION PREVIOUS PHASE
- TEMPORARY CONSTRUCTION THIS PHASE
- TEMPORARY CONSTRUCTION PREVIOUS PHASE
- PLASTIC DRUMS
- TRAFFIC LANES
- PCTB — PORTABLE CONCRETE TRAFFIC BARRIER
- XXX — SIGN PLACED IN PREVIOUS PHASE
- RIGHT OF WAY
- P — PERMANENT SIGN

STATE OF TEXAS
JEFFERY T. SEILER
77187
REGISTERED PROFESSIONAL ENGINEER

Jeffery T. Seiler
5-6-99

DATE	BY	REV	REVISION

© 1999 Texas Department of Transportation

Brown & Root
HOUSTON, TEXAS

RODRIGUEZ & HUGGINS, INC.
CONSULTING ENGINEERS
11824 JOLLYVILLE ROAD SUITE 402
AUSTIN, TEXAS 78759
PHONE: 512 335 1754 FAX: 512 335 1799

IH 35
TRAFFIC CONTROL PLAN PHASE III

0 25 50 100

SHEET 2 OF 9

FED RD DIV NO	STATE PROJECT NO		SHEET NO
6			182
STATE	STATE DIST NO	COUNTY	
TEXAS	22	WEBB	
CONT	SECT	JOB	HIGHWAY NO
0018	05	057	LOOP 20

80903.Mp. Interchange.mil C514.dgn

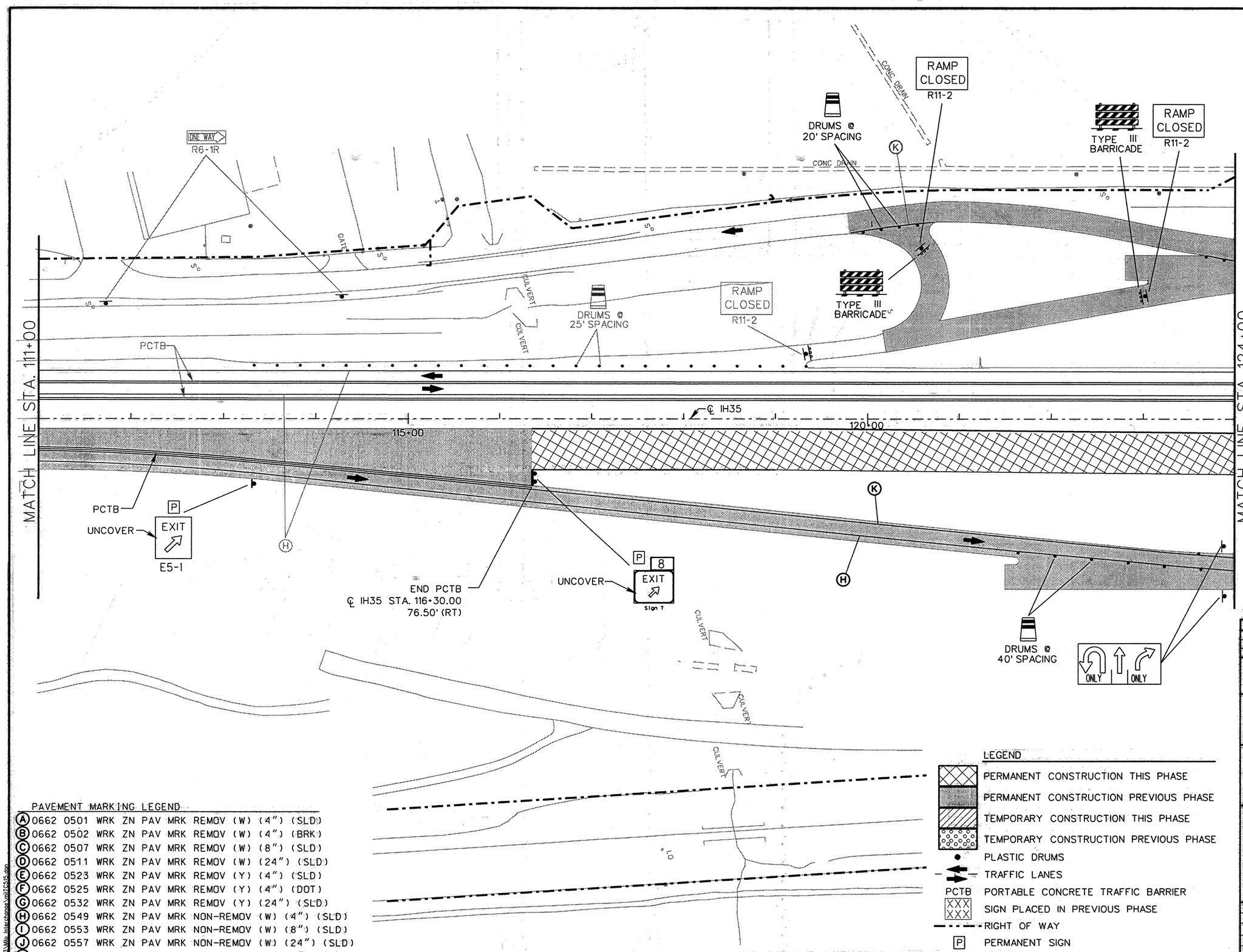

PAVEMENT MARKING LEGEND

(A)	0662	0501	WRK ZN PAV MRK	REMOV	(W)	(4")	(SLD)
(B)	0662	0502	WRK ZN PAV MRK	REMOV	(W)	(4")	(BRK)
(C)	0662	0507	WRK ZN PAV MRK	REMOV	(W)	(8")	(SLD)
(D)	0662	0511	WRK ZN PAV MRK	REMOV	(W)	(24")	(SLD)
(E)	0662	0523	WRK ZN PAV MRK	REMOV	(Y)	(4")	(SLD)
(F)	0662	0525	WRK ZN PAV MRK	REMOV	(Y)	(4")	(DOT)
(G)	0662	0532	WRK ZN PAV MRK	REMOV	(Y)	(24")	(SLD)
(H)	0662	0549	WRK ZN PAV MRK	NON-REMOV	(W)	(4")	(SLD)
(I)	0662	0553	WRK ZN PAV MRK	NON-REMOV	(W)	(8")	(SLD)
(J)	0662	0557	WRK ZN PAV MRK	NON-REMOV	(W)	(24")	(SLD)
(K)	0662	0569	WRK ZN PAV MRK	NON-REMOV	(Y)	(4")	(SLD)

LEGEND

- PERMANENT CONSTRUCTION THIS PHASE
- PERMANENT CONSTRUCTION PREVIOUS PHASE
- TEMPORARY CONSTRUCTION THIS PHASE
- TEMPORARY CONSTRUCTION PREVIOUS PHASE
- PLASTIC DRUMS
- TRAFFIC LANES
- PCTB PORTABLE CONCRETE TRAFFIC BARRIER
- XXX XXX SIGN PLACED IN PREVIOUS PHASE
- RIGHT OF WAY
- P PERMANENT SIGN

STATE OF TEXAS
JEFFERY T. SEILER
77187
REGISTERED PROFESSIONAL ENGINEER

Jeffery T. Seiler
5-6-99

DATE	BY	REV	REVISION

© 1999 Texas Department of Transportation

Brown & Root
HOUSTON, TEXAS

RODRIGUEZ & HUGGINS, INC.
CONSULTING ENGINEERS
11824 JOLLYVILLE ROAD SUITE 402
AUSTIN, TEXAS 78759
PHONE: 512 335 1754 FAX: 512 335 1799

IH 35
TRAFFIC CONTROL PLAN PHASE III

0 25 50 100

SHEET 3 OF 9

FED RD DIV NO	STATE PROJECT NO		SHEET NO
6			183
STATE	STATE DIST NO		COUNTY
TEXAS	22		WEBB
CONT	SECT	JOB	HIGHWAY NO
0018	05	057	LOOP 20

80903\Mto_Interchange\mtC515.dgn

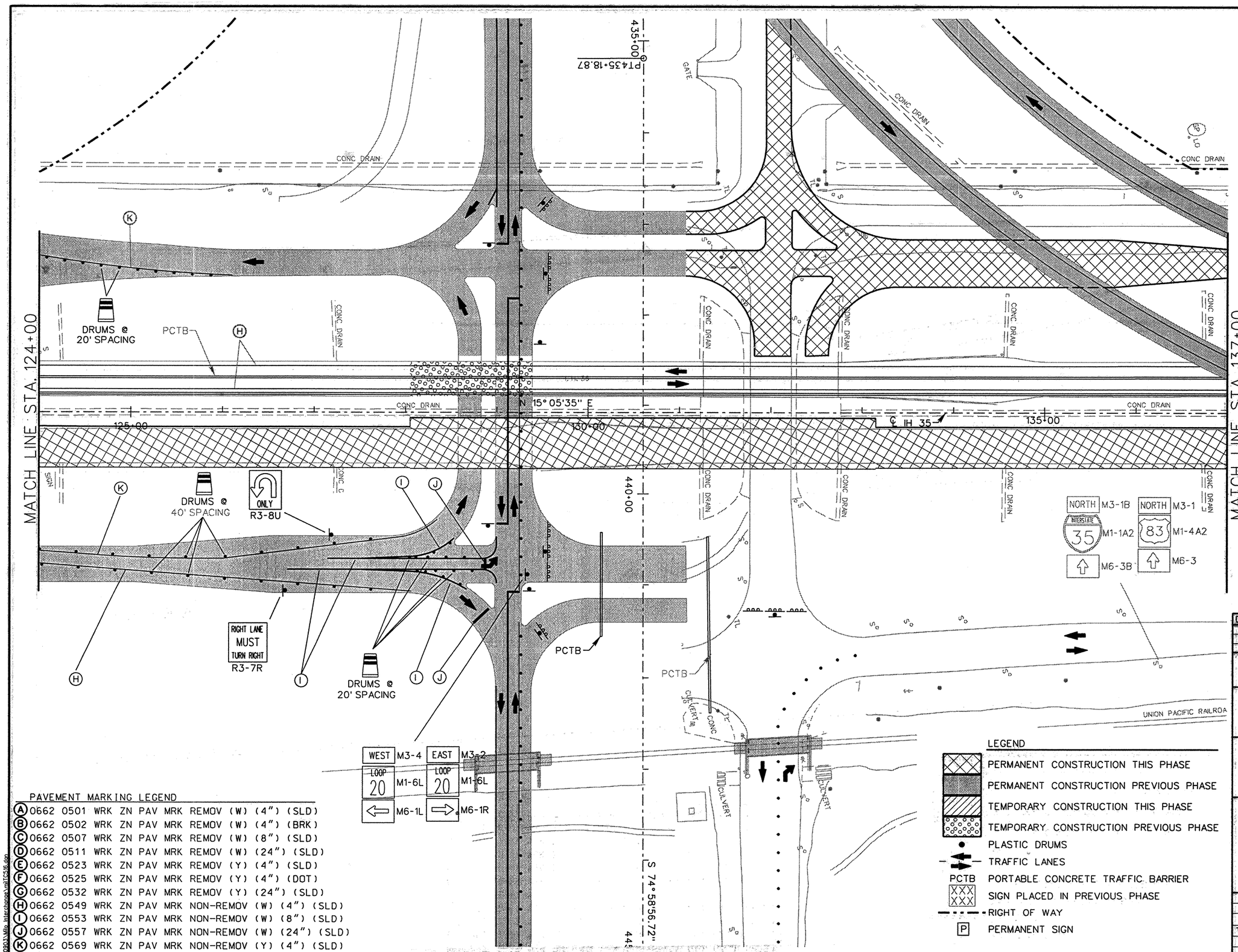

PAVEMENT MARKING LEGEND

(A)	0662	0501	WRK ZN PAV MRK	REMOV	(W)	(4")	(SLD)
(B)	0662	0502	WRK ZN PAV MRK	REMOV	(W)	(4")	(BRK)
(C)	0662	0507	WRK ZN PAV MRK	REMOV	(W)	(8")	(SLD)
(D)	0662	0511	WRK ZN PAV MRK	REMOV	(W)	(24")	(SLD)
(E)	0662	0523	WRK ZN PAV MRK	REMOV	(Y)	(4")	(SLD)
(F)	0662	0525	WRK ZN PAV MRK	REMOV	(Y)	(4")	(DOT)
(G)	0662	0532	WRK ZN PAV MRK	REMOV	(Y)	(24")	(SLD)
(H)	0662	0549	WRK ZN PAV MRK	NON-REMOV	(W)	(4")	(SLD)
(I)	0662	0553	WRK ZN PAV MRK	NON-REMOV	(W)	(8")	(SLD)
(J)	0662	0557	WRK ZN PAV MRK	NON-REMOV	(W)	(24")	(SLD)
(K)	0662	0569	WRK ZN PAV MRK	NON-REMOV	(Y)	(4")	(SLD)

STATE OF TEXAS
JEFFERY T. SEILER
77187
REGISTERED PROFESSIONAL ENGINEER

Jeffery T. Seiler
5-6-99

DATE	BY	REV	REVISION

© 1999 Texas Department of Transportation

Brown & Root
HOUSTON, TEXAS

RODRIGUEZ & HUGGINS, INC.
CONSULTING ENGINEERS
11824 JOLLYVILLE ROAD SUITE 402
AUSTIN, TEXAS 78759
PHONE: 512 335 1754 FAX: 512 335 1799

IH 35
TRAFFIC CONTROL PLAN
PHASE III

0 25 50 100

SHEET 4 OF 9

FED RD DIV NO	STATE PROJECT NO		SHEET NO
6			184
STATE	STATE DIST NO	COUNTY	
TEXAS	22	WEBB	
CONT	SECT	JOB	HIGHWAY NO
0018	05	057	LOOP 20

80803A\Mlo_Interchange\mil1C4b.dgn

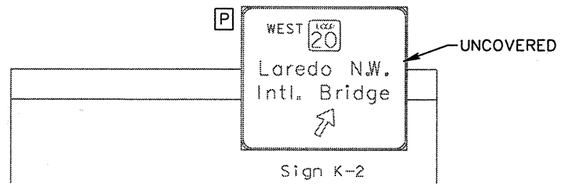

SIGN BRIDGE "K"

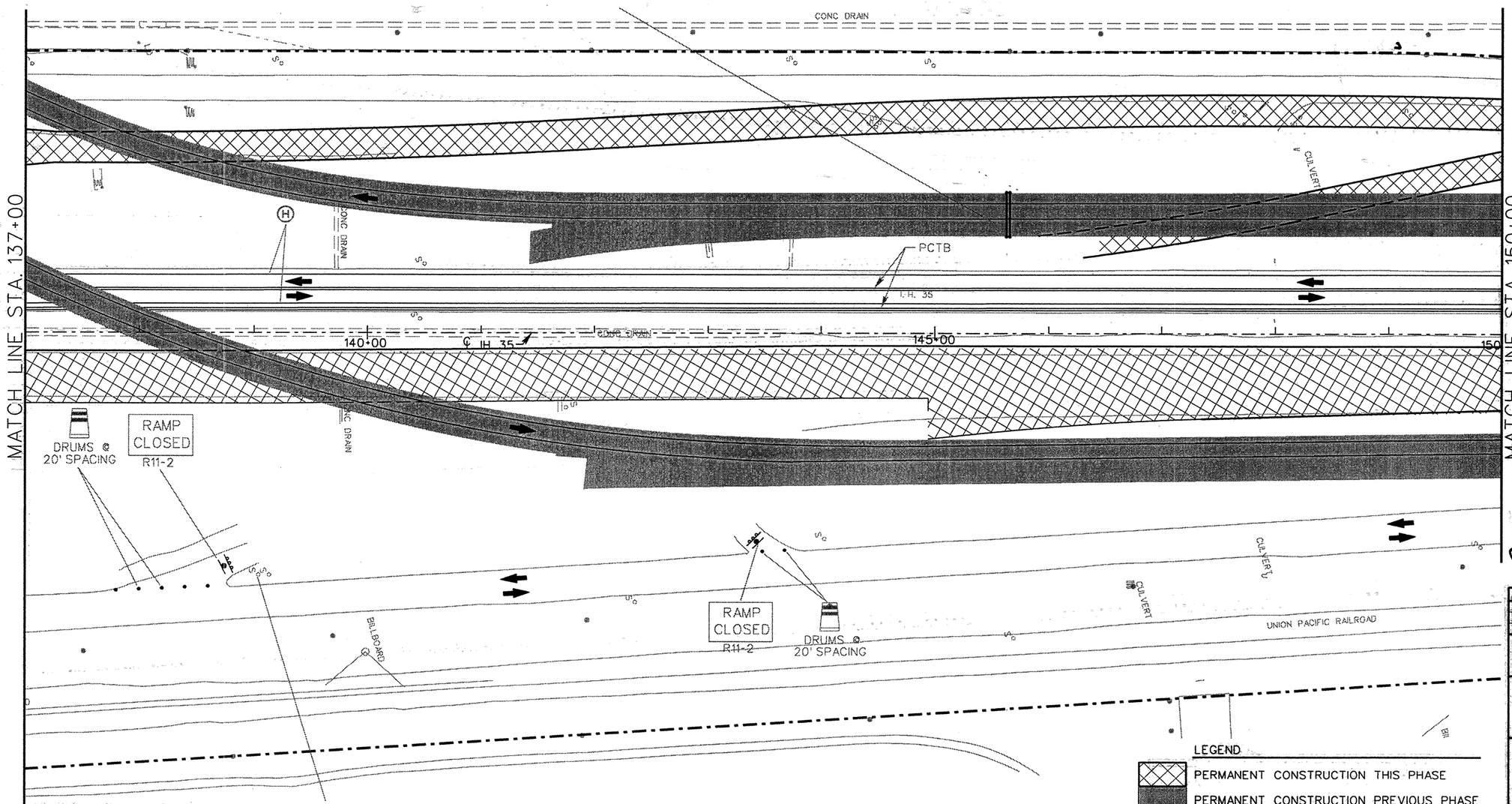

PAVEMENT MARKING LEGEND

(A) 0662 0501 WRK ZN PAV MRK REMOV (W) (4") (SLD)
(B) 0662 0502 WRK ZN PAV MRK REMOV (W) (4") (BRK)
(C) 0662 0507 WRK ZN PAV MRK REMOV (W) (8") (SLD)
(D) 0662 0511 WRK ZN PAV MRK REMOV (W) (24") (SLD)
(E) 0662 0523 WRK ZN PAV MRK REMOV (Y) (4") (SLD)
(F) 0662 0525 WRK ZN PAV MRK REMOV (Y) (4") (DOT)
(G) 0662 0532 WRK ZN PAV MRK REMOV (Y) (24") (SLD)
(H) 0662 0549 WRK ZN PAV MRK NON-REMOV (W) (4") (SLD)
(I) 0662 0553 WRK ZN PAV MRK NON-REMOV (W) (8") (SLD)
(J) 0662 0557 WRK ZN PAV MRK NON-REMOV (W) (24") (SLD)
(K) 0662 0569 WRK ZN PAV MRK NON-REMOV (Y) (4") (SLD)

LEGEND

- PERMANENT CONSTRUCTION THIS PHASE
- PERMANENT CONSTRUCTION PREVIOUS PHASE
- TEMPORARY CONSTRUCTION THIS PHASE
- TEMPORARY CONSTRUCTION PREVIOUS PHASE
- PLASTIC DRUMS
- TRAFFIC LANES
- PCTB — PORTABLE CONCRETE TRAFFIC BARRIER
- SIGN PLACED IN PREVIOUS PHASE
- RIGHT OF WAY
- P — PERMANENT SIGN

STATE OF TEXAS
JEFFERY T. SEILER
77187
REGISTERED PROFESSIONAL ENGINEER

Jeffery T. Seiler
5-12-99

DATE	BY	REV	REVISION

© 1999 Texas Department of Transportation

Brown & Root
HOUSTON, TEXAS

RODRIGUEZ & HUGGINS, INC.
CONSULTING ENGINEERS
11824 JOLLYVILLE ROAD SUITE 402
AUSTIN, TEXAS 78759
PHONE: 512 335 1754 FAX: 512 335 1799

IH 35
TRAFFIC CONTROL PLAN
PHASE III

0 25 50 100

SHEET 5 OF 9

FED RD DIV NO	STATE PROJECT NO		SHEET NO
6			185
STATE	STATE DIST NO		COUNTY
TEXAS	22		WEBB
CONT	SECT	JOB	HIGHWAY NO
0018	05	057	LOOP 20

80903\Mile Interchange\mlTC517.dgn

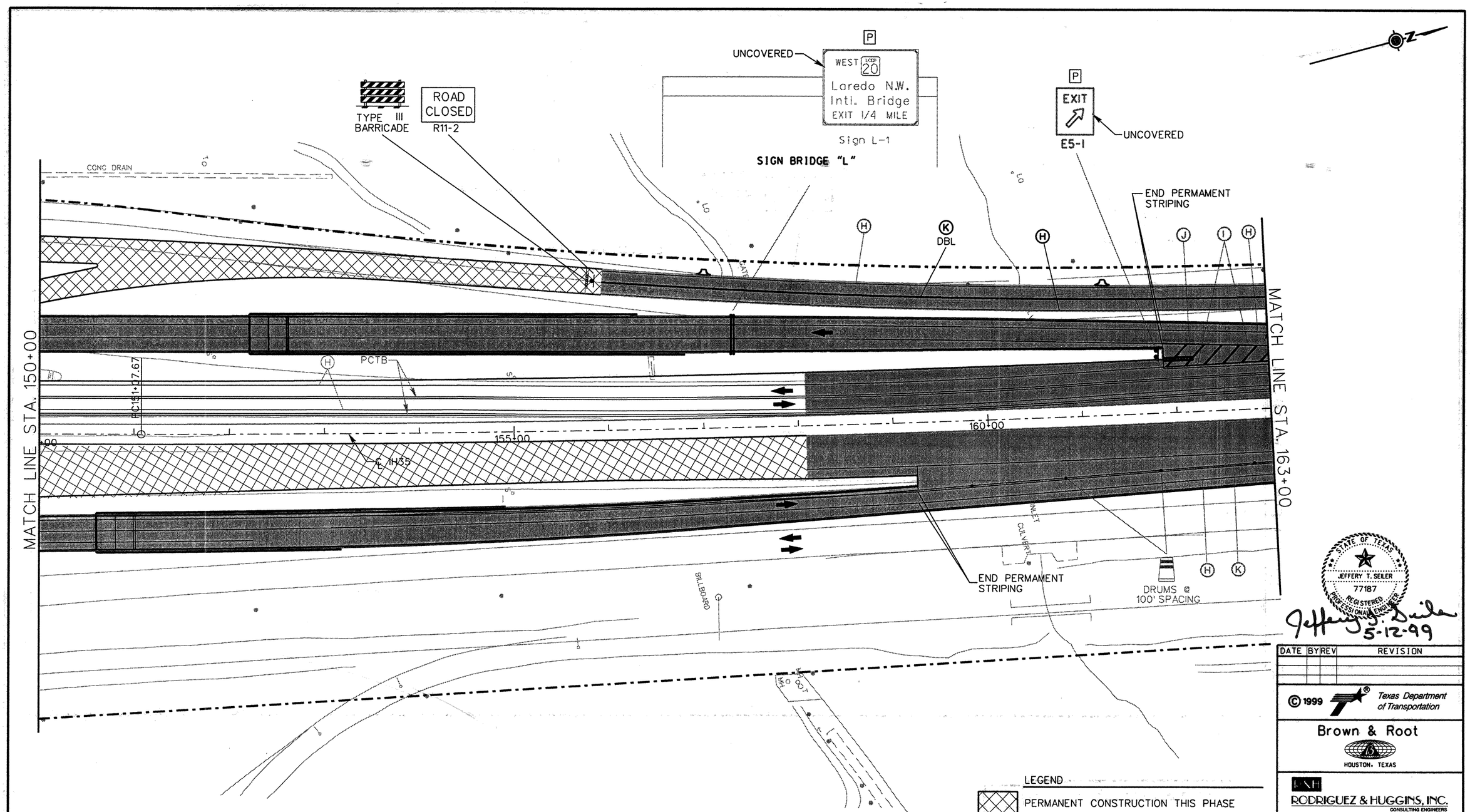

PAVEMENT MARKING LEGEND

A	0662 0501 WRK ZN PAV MRK REMOV (W) (4") (SLD)
B	0662 0502 WRK ZN PAV MRK REMOV (W) (4") (BRK)
C	0662 0507 WRK ZN PAV MRK REMOV (W) (8") (SLD)
D	0662 0511 WRK ZN PAV MRK REMOV (W) (24") (SLD)
E	0662 0523 WRK ZN PAV MRK REMOV (Y) (4") (SLD)
F	0662 0525 WRK ZN PAV MRK REMOV (Y) (4") (DOT)
G	0662 0532 WRK ZN PAV MRK REMOV (Y) (24") (SLD)
H	0662 0549 WRK ZN PAV MRK NON-REMOV (W) (4") (SLD)
I	0662 0553 WRK ZN PAV MRK NON-REMOV (W) (8") (SLD)
J	0662 0557 WRK ZN PAV MRK NON-REMOV (W) (24") (SLD)
K	0662 0569 WRK ZN PAV MRK NON-REMOV (Y) (4") (SLD)

LEGEND

- PERMANENT CONSTRUCTION THIS PHASE
- PERMANENT CONSTRUCTION PREVIOUS PHASE
- TEMPORARY CONSTRUCTION THIS PHASE
- TEMPORARY CONSTRUCTION PREVIOUS PHASE
- PLASTIC DRUMS
- TRAFFIC LANES
- PCTB PORTABLE CONCRETE TRAFFIC BARRIER
- XXX SIGN PLACED IN PREVIOUS PHASE
- RIGHT OF WAY
- P PERMANENT SIGN

STATE OF TEXAS
JEFFERY T. SEILER
77187
REGISTERED PROFESSIONAL ENGINEER

Jeffery T. Seiler
5-12-99

DATE	BY	REV	REVISION

© 1999 Texas Department of Transportation

Brown & Root
HOUSTON, TEXAS

RODRIGUEZ & HUGGINS, INC.
CONSULTING ENGINEERS
11824 JOLLYVILLE ROAD SUITE 402
AUSTIN, TEXAS 78759
PHONE: 512 335 1754 FAX: 512 335 1799

IH 35

TRAFFIC CONTROL PLAN
PHASE III

0 25 50 100

SHEET 6 OF 9

FED RD DIV NO	STATE PROJECT NO		SHEET NO
6			186
STATE	STATE DIST NO		COUNTY
TEXAS	22		WEBB
CONT	SECT	JOB	HIGHWAY NO
0018	05	057	LOOP 20

80903\Mlo Interchange\mlTC518.dgn

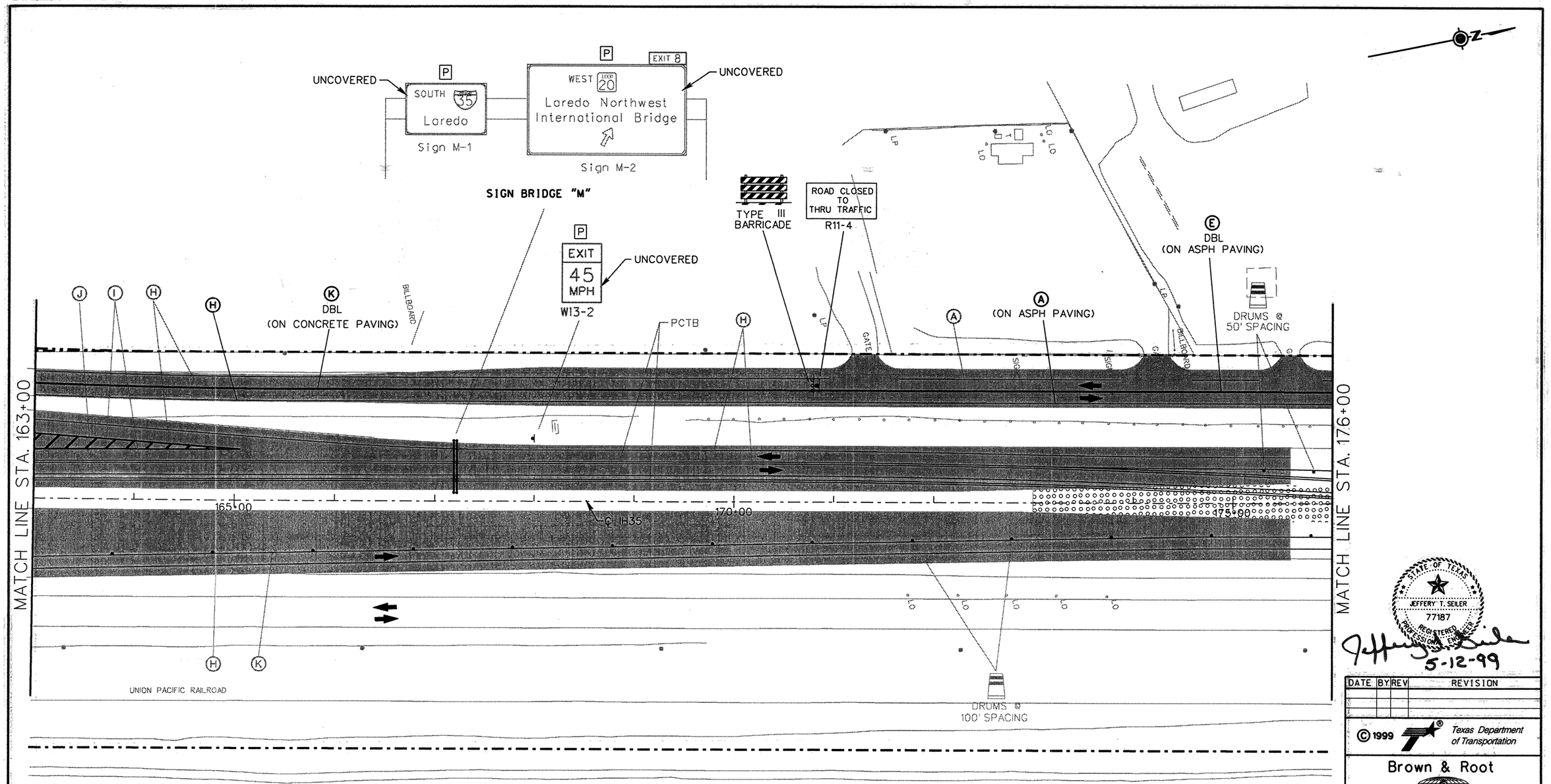

PAVEMENT MARKING LEGEND

A	0662	0501	WRK ZN PAV MRK	REMOV	(W)	(4")	(SLD)
B	0662	0502	WRK ZN PAV MRK	REMOV	(W)	(4")	(BRK)
C	0662	0507	WRK ZN PAV MRK	REMOV	(W)	(8")	(SLD)
D	0662	0511	WRK ZN PAV MRK	REMOV	(W)	(24")	(SLD)
E	0662	0523	WRK ZN PAV MRK	REMOV	(Y)	(4")	(SLD)
F	0662	0525	WRK ZN PAV MRK	REMOV	(Y)	(4")	(DOT)
G	0662	0532	WRK ZN PAV MRK	REMOV	(Y)	(24")	(SLD)
H	0662	0549	WRK ZN PAV MRK	NON-REMOV	(W)	(4")	(SLD)
I	0662	0553	WRK ZN PAV MRK	NON-REMOV	(W)	(8")	(SLD)
J	0662	0557	WRK ZN PAV MRK	NON-REMOV	(W)	(24")	(SLD)
K	0662	0569	WRK ZN PAV MRK	NON-REMOV	(Y)	(4")	(SLD)

LEGEND

- PERMANENT CONSTRUCTION THIS PHASE
- PERMANENT CONSTRUCTION PREVIOUS PHASE
- TEMPORARY CONSTRUCTION THIS PHASE
- TEMPORARY CONSTRUCTION PREVIOUS PHASE
- PLASTIC DRUMS
- TRAFFIC LANES
- PCTB — PORTABLE CONCRETE TRAFFIC BARRIER
- SIGN PLACED IN PREVIOUS PHASE
- RIGHT OF WAY
- P — PERMANENT SIGN

STATE OF TEXAS
JEFFERY T. SEILER
77187
REGISTERED PROFESSIONAL ENGINEER

5-12-99

DATE	BY	REV	REVISION

© 1999 Texas Department of Transportation

Brown & Root
HOUSTON, TEXAS

RODRIGUEZ & HUGGINS, INC.
CONSULTING ENGINEERS
11824 JOLLYVILLE ROAD SUITE 402
AUSTIN, TEXAS 78759
PHONE: 512 335 1784 FAX: 512 335 1799

IH 35
TRAFFIC CONTROL PLAN PHASE III

0 25 50 100

SHEET 7 OF 9

FED RD DIV NO	STATE PROJECT NO		SHEET NO
6			187
STATE	STATE DIST NO		COUNTY
TEXAS	22		WEBB
CONT	SECT	JOB	HIGHWAY NO
0018	05	057	LOOP 20

80903\Milo_Interchange\milTC19.dgn

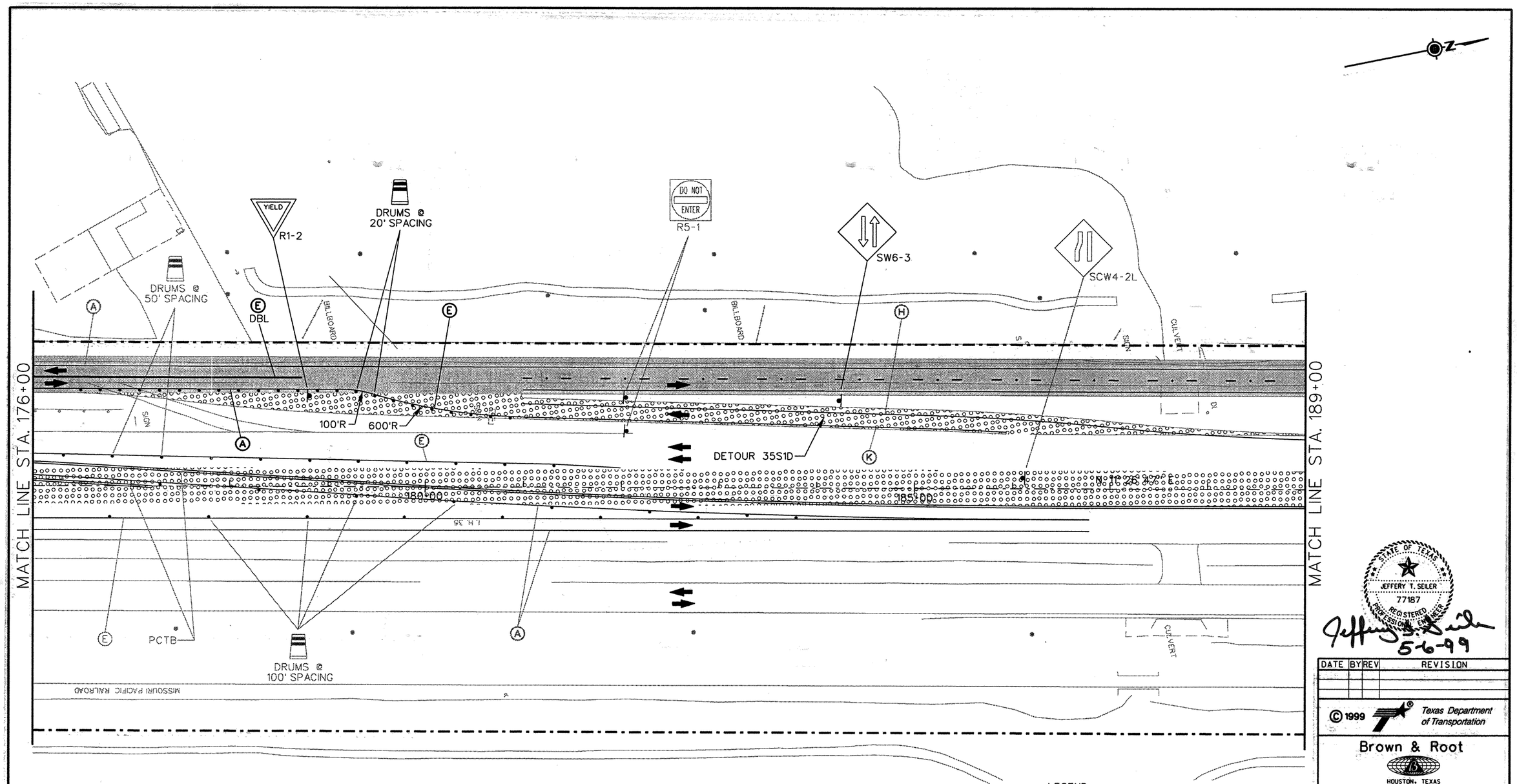

PAVEMENT MARKING LEGEND

(A) 0662 0501 WRK ZN PAV MRK REMOV (W) (4") (SLD)
(B) 0662 0502 WRK ZN PAV MRK REMOV (W) (4") (BRK)
(C) 0662 0507 WRK ZN PAV MRK REMOV (W) (8") (SLD)
(D) 0662 0511 WRK ZN PAV MRK REMOV (W) (24") (SLD)
(E) 0662 0523 WRK ZN PAV MRK REMOV (Y) (4") (SLD)
(F) 0662 0525 WRK ZN PAV MRK REMOV (Y) (4") (DOT)
(G) 0662 0532 WRK ZN PAV MRK REMOV (Y) (24") (SLD)
(H) 0662 0549 WRK ZN PAV MRK NON-REMOV (W) (4") (SLD)
(I) 0662 0553 WRK ZN PAV MRK NON-REMOV (W) (8") (SLD)
(J) 0662 0557 WRK ZN PAV MRK NON-REMOV (W) (24") (SLD)
(K) 0662 0569 WRK ZN PAV MRK NON-REMOV (Y) (4") (SLD)

LEGEND

- PERMANENT CONSTRUCTION THIS PHASE
- PERMANENT CONSTRUCTION PREVIOUS PHASE
- TEMPORARY CONSTRUCTION THIS PHASE
- TEMPORARY CONSTRUCTION PREVIOUS PHASE
- PLASTIC DRUMS
- TRAFFIC LANES
- PCTB PORTABLE CONCRETE TRAFFIC BARRIER
- XXX SIGN PLACED IN PREVIOUS PHASE
- RIGHT OF WAY
- P PERMANENT SIGN

STATE OF TEXAS
JEFFERY T. SEILER
77187
REGISTERED PROFESSIONAL ENGINEER

Jeffery T. Seiler
5-6-99

DATE	BY	REV	REVISION

© 1999 Texas Department of Transportation

Brown & Root
HOUSTON, TEXAS

RNH
RODRIGUEZ & HUGGINS, INC.
CONSULTING ENGINEERS
11824 JOLLYVILLE ROAD SUITE 402
AUSTIN, TEXAS 78759
PHONE: 512 335 1754 FAX: 512 335 1799

IH 35
TRAFFIC CONTROL PLAN
PHASE III

0 25 50 100

SHEET 8 OF 9

FED RD DIV NO	STATE PROJECT NO		SHEET NO
6			188
STATE	STATE DIST NO		COUNTY
TEXAS	22		WEBB
CONT	SECT	JOB	HIGHWAY NO
0018	05	057	LOOP 20

80903\Mfg Interchange\mitTC520.dgn

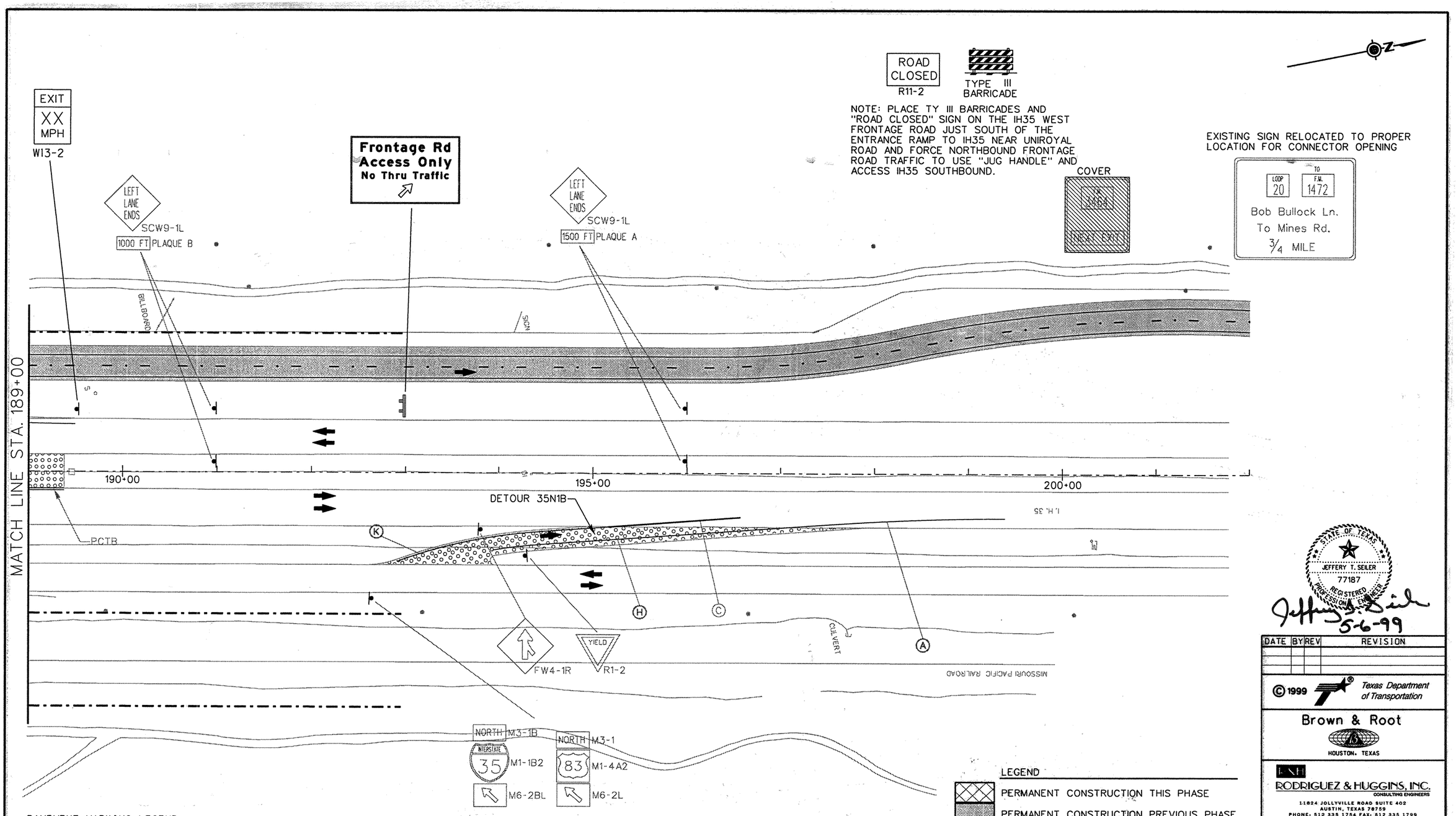

PAVEMENT MARKING LEGEND

(A) 0662 0501 WRK ZN PAV MRK REMOV (W) (4") (SLD)
(B) 0662 0502 WRK ZN PAV MRK REMOV (W) (4") (BRK)
(C) 0662 0507 WRK ZN PAV MRK REMOV (W) (8") (SLD)
(D) 0662 0511 WRK ZN PAV MRK REMOV (W) (24") (SLD)
(E) 0662 0523 WRK ZN PAV MRK REMOV (Y) (4") (SLD)
(F) 0662 0525 WRK ZN PAV MRK REMOV (Y) (4") (DOT)
(G) 0662 0532 WRK ZN PAV MRK REMOV (Y) (24") (SLD)
(H) 0662 0549 WRK ZN PAV MRK NON-REMOV (W) (4") (SLD)
(I) 0662 0553 WRK ZN PAV MRK NON-REMOV (W) (8") (SLD)
(J) 0662 0557 WRK ZN PAV MRK NON-REMOV (W) (24") (SLD)
(K) 0662 0569 WRK ZN PAV MRK NON-REMOV (Y) (4") (SLD)

LEGEND

- PERMANENT CONSTRUCTION THIS PHASE
- PERMANENT CONSTRUCTION PREVIOUS PHASE
- TEMPORARY CONSTRUCTION THIS PHASE
- TEMPORARY CONSTRUCTION PREVIOUS PHASE
- PLASTIC DRUMS
- TRAFFIC LANES
- PCTB — PORTABLE CONCRETE TRAFFIC BARRIER
- SIGN PLACED IN PREVIOUS PHASE
- RIGHT OF WAY
- P — PERMANENT SIGN

STATE OF TEXAS
JEFFERY T. SEILER
77187
REGISTERED PROFESSIONAL ENGINEER

Jeffery T. Seiler
5-6-99

DATE	BY	REV	REVISION

© 1999 Texas Department of Transportation

Brown & Root
HOUSTON, TEXAS

RODRIGUEZ & HUGGINS, INC.
CONSULTING ENGINEERS
11824 JOLLYVILLE ROAD SUITE 402
AUSTIN, TEXAS 78759
PHONE: 512 335 1754 FAX: 512 335 1799

IH 35
TRAFFIC CONTROL PLAN PHASE III

0 25 50 100

SHEET 9 OF 9

FED RD DIV NO	STATE PROJECT NO		SHEET NO
6			189
STATE	STATE DIST NO	COUNTY	
TEXAS	22	WEBB	
CONT	SECT	JOB	HIGHWAY NO
0018	05	057	LOOP 20

809923.Mfp, intersection\mil\TC921.dgn

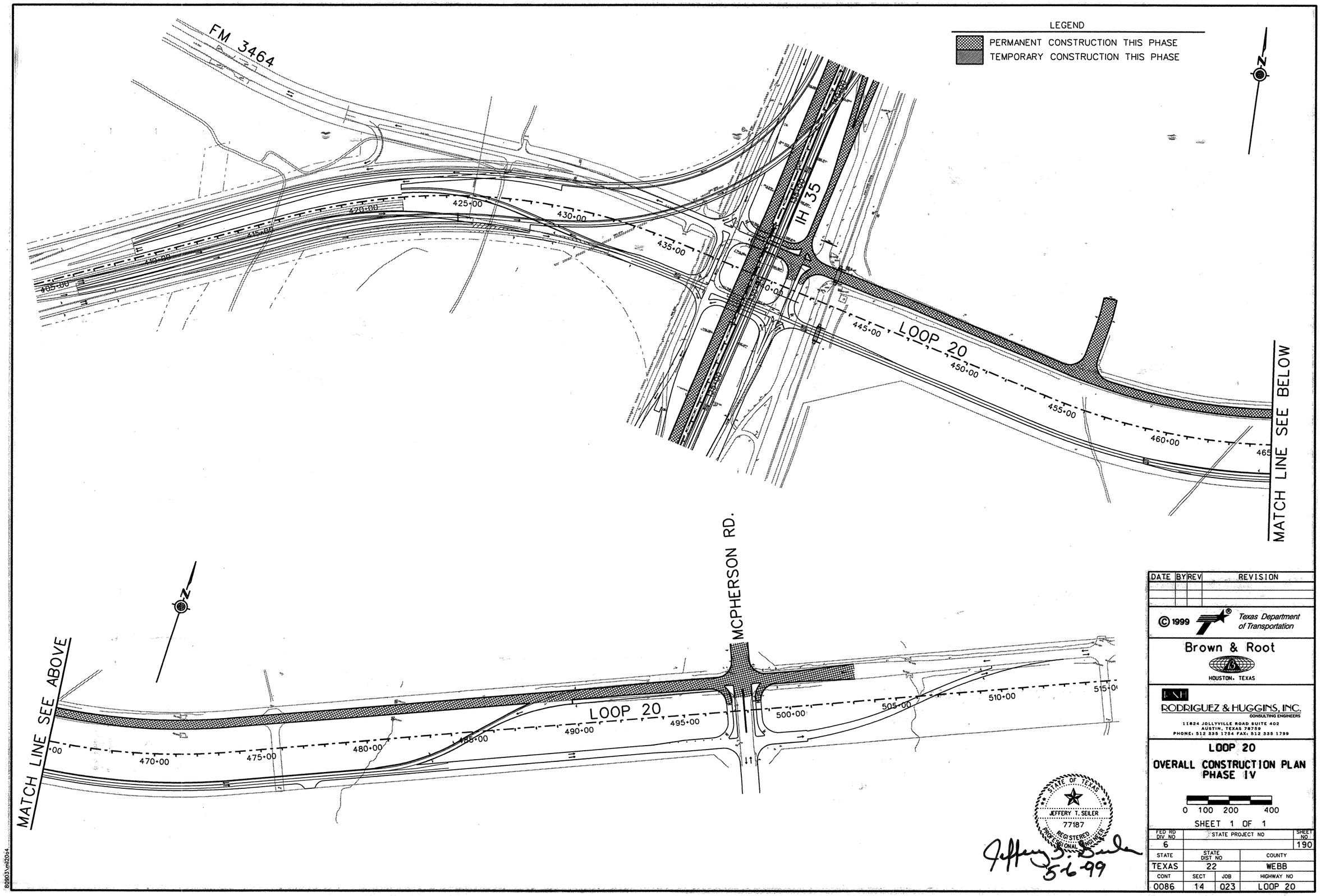

DATE	BY	REV	REVISION

© 1999 Texas Department of Transportation

Brown & Root
HOUSTON, TEXAS

RNH
RODRIGUEZ & HUGGINS, INC.
CONSULTING ENGINEERS
11824 JOLLYVILLE ROAD SUITE 402
AUSTIN, TEXAS 78759
PHONE: 512 335 1754 FAX: 512 335 1799

LOOP 20
OVERALL CONSTRUCTION PLAN PHASE IV

0 100 200 400

SHEET 1 OF 1

STATE OF TEXAS
JEFFERY T. SEILER
77187
REGISTERED PROFESSIONAL ENGINEER

Jeffery T. Seiler
5-6-99

FED RD DIV NO	STATE PROJECT NO		SHEET NO
6			190
STATE	STATE DIST NO	COUNTY	
TEXAS	22	WEBB	
CONT	SECT	JOB	HIGHWAY NO
0086	14	023	LOOP 20

80903\mi20s4

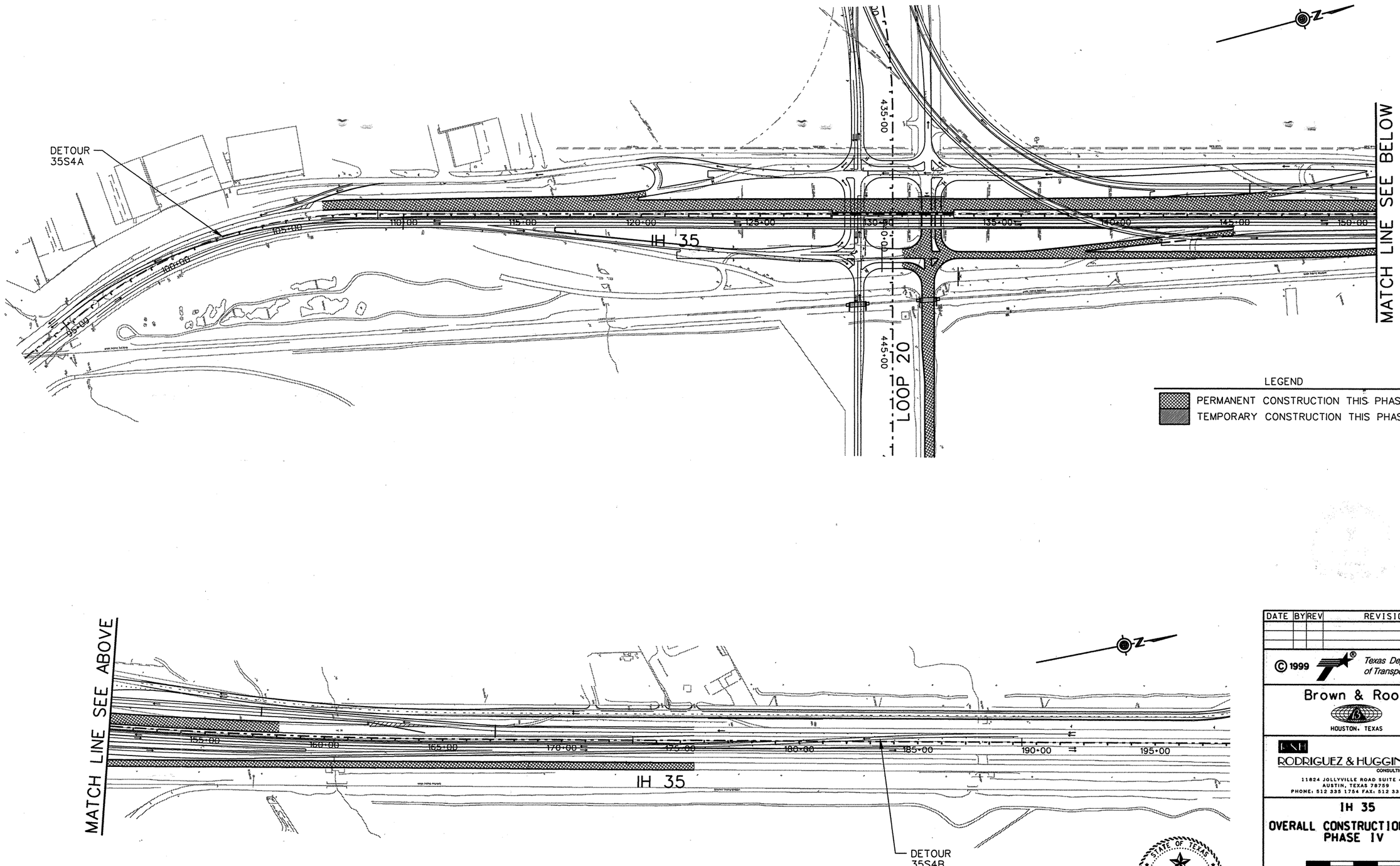

DATE	BY	REV	REVISION

© 1999 Texas Department of Transportation

Brown & Root
HOUSTON, TEXAS

RODRIGUEZ & HUGGINS, INC.
CONSULTING ENGINEERS
11824 JOLLYVILLE ROAD SUITE 402
AUSTIN, TEXAS 78759
PHONE: 512 335 1764 FAX: 512 335 1799

IH 35
OVERALL CONSTRUCTION PLAN PHASE IV

0 100 200 400

SHEET 1 OF 1

STATE OF TEXAS
JEFFERY T. SELER
77187
REGISTERED PROFESSIONAL ENGINEER

Jeffery T. Seler
5-6-99

FED RD DIV NO	STATE PROJECT NO		SHEET NO
6			191
STATE	STATE DIST NO		COUNTY
TEXAS	22		WEBB
CONT	SECT	JOB	HIGHWAY NO
0018	06	131	LOOP 20

80903\rnl35o4

PAVEMENT MARKING LEGEND

- (A) 0662 0501 WRK ZN PAV MRK REMOV (W) (4") (SLD)
- (B) 0662 0502 WRK ZN PAV MRK REMOV (W) (4") (BRK)
- (C) 0662 0507 WRK ZN PAV MRK REMOV (W) (8") (SLD)
- (D) 0662 0511 WRK ZN PAV MRK REMOV (W) (24") (SLD)
- (E) 0662 0523 WRK ZN PAV MRK REMOV (Y) (4") (SLD)
- (F) 0662 0525 WRK ZN PAV MRK REMOV (Y) (4") (DOT)
- (G) 0662 0532 WRK ZN PAV MRK REMOV (Y) (24") (SLD)
- (H) 0662 0549 WRK ZN PAV MRK NON-REMOV (W) (4") (SLD)
- (I) 0662 0553 WRK ZN PAV MRK NON-REMOV (W) (8") (SLD)
- (J) 0662 0557 WRK ZN PAV MRK NON-REMOV (W) (24") (SLD)
- (K) 0662 0569 WRK ZN PAV MRK NON-REMOV (Y) (4") (SLD)

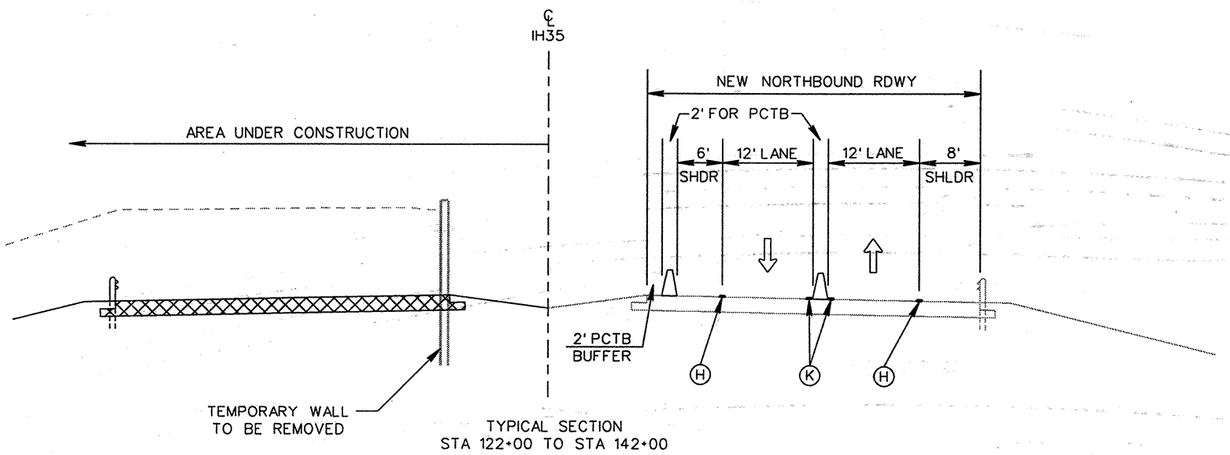

TYPICAL SECTION
STA 122+00 TO STA 142+00

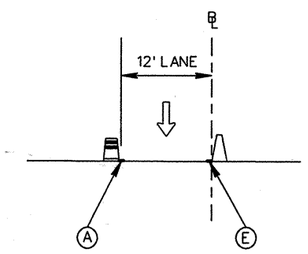

TYPICAL SECTION
DETOUR 35S4A

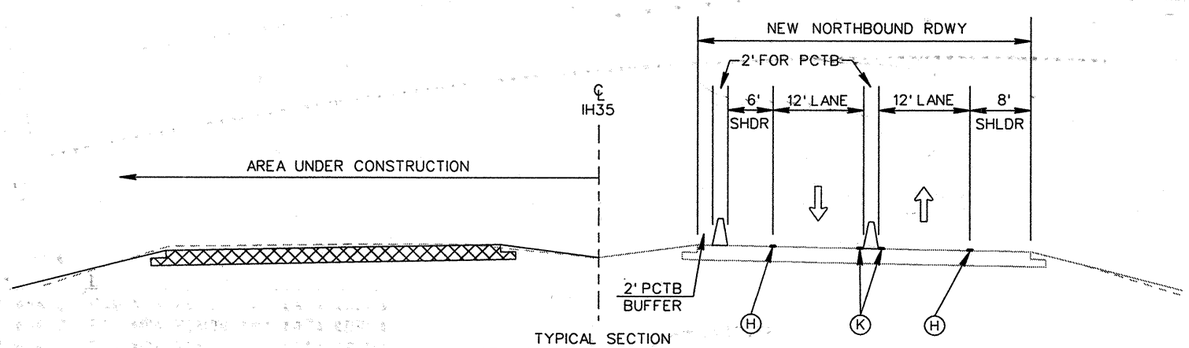

TYPICAL SECTION
STA 106+85 TO STA 122+00 &
STA 142+00 TO STA 158+00

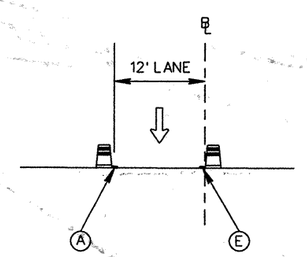

TYPICAL SECTION
DETOUR 35S4B

STATE OF TEXAS
JEFFERY T. SEILER
77187
REGISTERED PROFESSIONAL ENGINEER

5-6-99

DATE	BY	REV	REVISION

© 1999 Texas Department of Transportation

Brown & Root
HOUSTON, TEXAS

RODRIGUEZ & HUGGINS, INC.
CONSULTING ENGINEERS
11824 JOLLYVILLE ROAD SUITE 402
AUSTIN, TEXAS 78759
PHONE: 512 335 1754 FAX: 512 335 1799

IH 35
TCP TYPICAL SECTIONS
PHASE IV

0 10 20

SHEET 1 OF 1

FED RD DIV NO	STATE PROJECT NO		SHEET NO
6			192
STATE	STATE DIST NO		COUNTY
TEXAS	22		WEBB
CONT	SECT	JOB	HIGHWAY NO
0018	05	057	LOOP 20

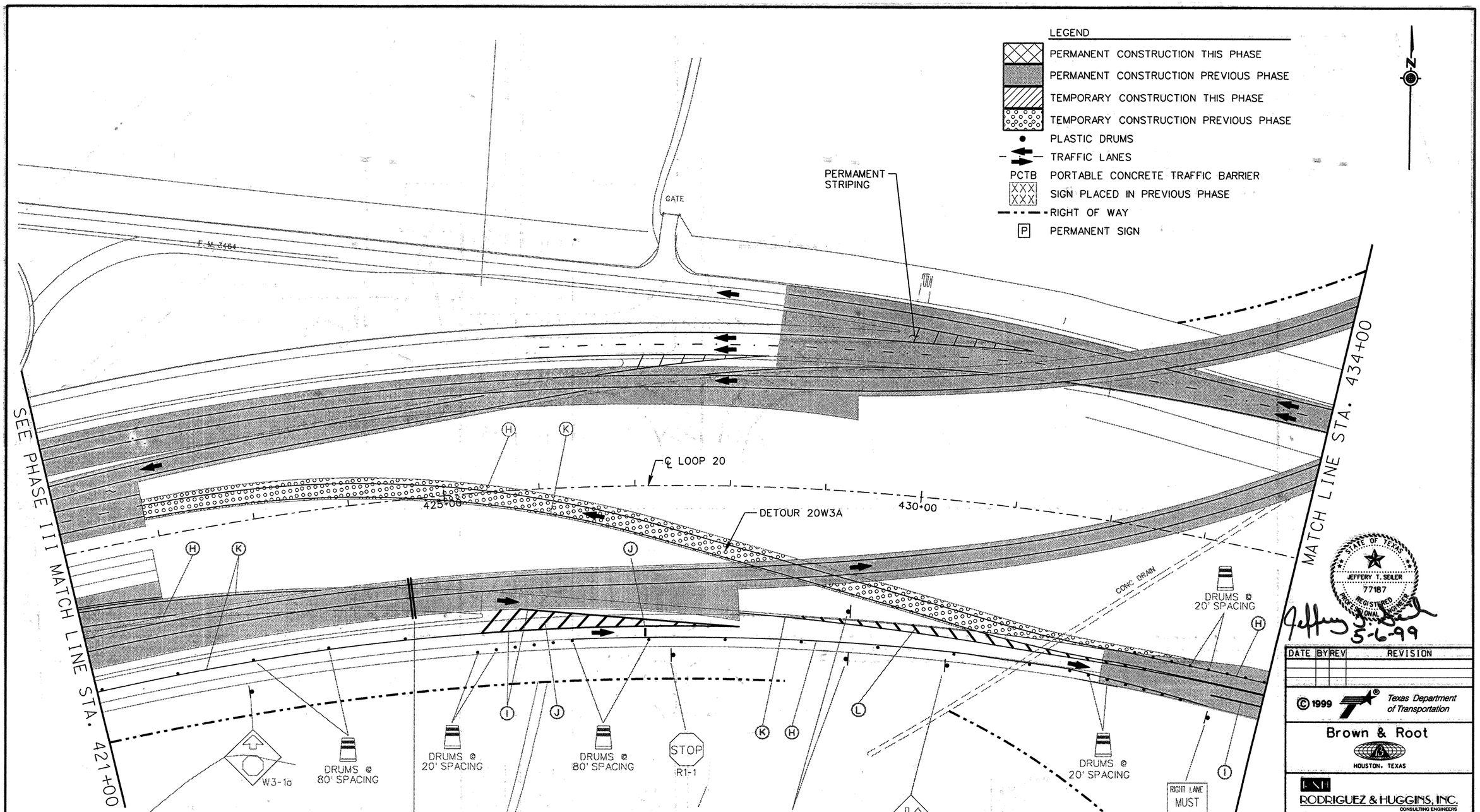

PAVEMENT MARKING LEGEND

A	0662	0501	WRK	ZN	PAV	MRK	REMOV	(W)	(4") (SLD)
B	0662	0502	WRK	ZN	PAV	MRK	REMOV	(W)	(4") (BRK)
C	0662	0507	WRK	ZN	PAV	MRK	REMOV	(W)	(8") (SLD)
D	0662	0511	WRK	ZN	PAV	MRK	REMOV	(W)	(24") (SLD)
E	0662	0523	WRK	ZN	PAV	MRK	REMOV	(Y)	(4") (SLD)
F	0662	0525	WRK	ZN	PAV	MRK	REMOV	(Y)	(4") (DOT)
G	0662	0532	WRK	ZN	PAV	MRK	REMOV	(Y)	(24") (SLD)
H	0662	0549	WRK	ZN	PAV	MRK	NON-REMOV	(W)	(4") (SLD)
I	0662	0553	WRK	ZN	PAV	MRK	NON-REMOV	(W)	(8") (SLD)
J	0662	0557	WRK	ZN	PAV	MRK	NON-REMOV	(W)	(24") (SLD)
K	0662	0569	WRK	ZN	PAV	MRK	NON-REMOV	(Y)	(4") (SLD)
L	0662	0576	WRK	ZN	PAV	MRK	NON-REMOV	)Y)	(24") (SLD)

80903\Milo Interchange\milTC606.dgn

STATE OF TEXAS
JEFFERY T. SEILER
77187
REGISTERED PROFESSIONAL ENGINEER

Jeffery T. Seiler
5-6-99

DATE	BY	REV	REVISION

© 1999 Texas Department of Transportation

Brown & Root
HOUSTON, TEXAS

RODRIGUEZ & HUGGINS, INC.
CONSULTING ENGINEERS
11824 JOLLYVILLE ROAD SUITE 402
AUSTIN, TEXAS 78759
PHONE: 512 335 1754 FAX: 512 335 1799

LOOP 20
TRAFFIC CONTROL PLAN PHASE IV

0 25 50 100

SHEET 1 OF 7

FED RD DIV NO	STATE PROJECT NO		SHEET NO
6			193
STATE	STATE DIST NO		COUNTY
TEXAS	22		WEBB
CONT	SECT	JOB	HIGHWAY NO
0086	14	023	LOOP 20

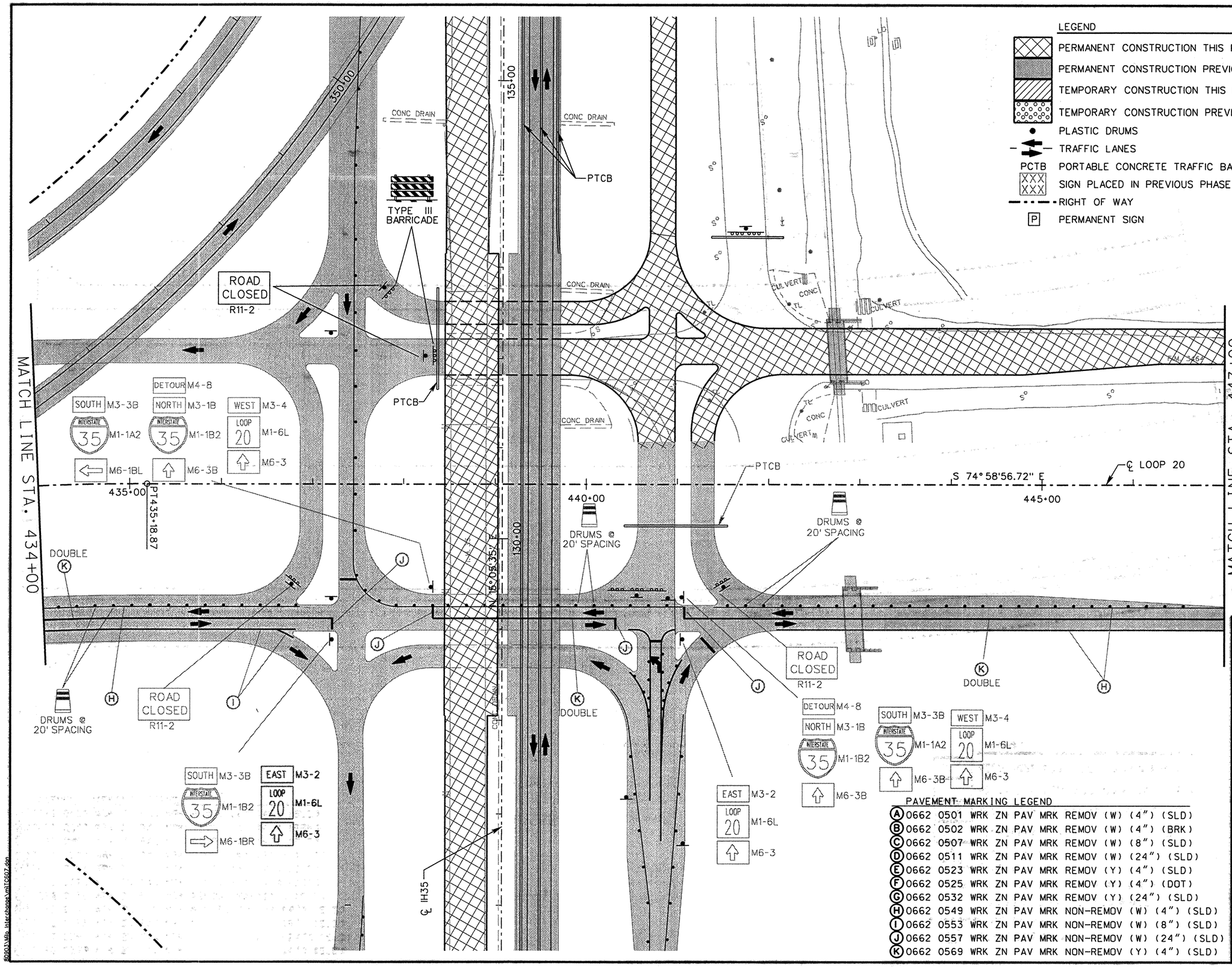

PAVEMENT MARKING LEGEND

(A) 0662 0501 WRK ZN PAV MRK REMOV (W) (4") (SLD)
(B) 0662 0502 WRK ZN PAV MRK REMOV (W) (4") (BRK)
(C) 0662 0507 WRK ZN PAV MRK REMOV (W) (8") (SLD)
(D) 0662 0511 WRK ZN PAV MRK REMOV (W) (24") (SLD)
(E) 0662 0523 WRK ZN PAV MRK REMOV (Y) (4") (SLD)
(F) 0662 0525 WRK ZN PAV MRK REMOV (Y) (4") (DOT)
(G) 0662 0532 WRK ZN PAV MRK REMOV (Y) (24") (SLD)
(H) 0662 0549 WRK ZN PAV MRK NON-REMOV (W) (4") (SLD)
(I) 0662 0553 WRK ZN PAV MRK NON-REMOV (W) (8") (SLD)
(J) 0662 0557 WRK ZN PAV MRK NON-REMOV (W) (24") (SLD)
(K) 0662 0569 WRK ZN PAV MRK NON-REMOV (Y) (4") (SLD)

STATE OF TEXAS
JEFFERY T. SEILER
77187
REGISTERED PROFESSIONAL ENGINEER

Jeffery T. Seiler
5-6-99

DATE	BY	REV	REVISION

© 1999 Texas Department of Transportation

Brown & Root
HOUSTON, TEXAS

RODRIGUEZ & HUGGINS, INC.
CONSULTING ENGINEERS
11824 JOLLYVILLE ROAD SUITE 402
AUSTIN, TEXAS 78759
PHONE: 512 335 1754 FAX: 512 335 1799

LOOP 20
TRAFFIC CONTROL PLAN PHASE IV

0 25 50 100

SHEET 2 OF 7

FED RD DIV NO	STATE PROJECT NO		SHEET NO
6			194
STATE	STATE DIST NO		COUNTY
TEXAS	22		WEBB
CONT	SECT	JOB	HIGHWAY NO
0086	14	023	LOOP 20

80903\Mp_interchange\mltc607.dgn

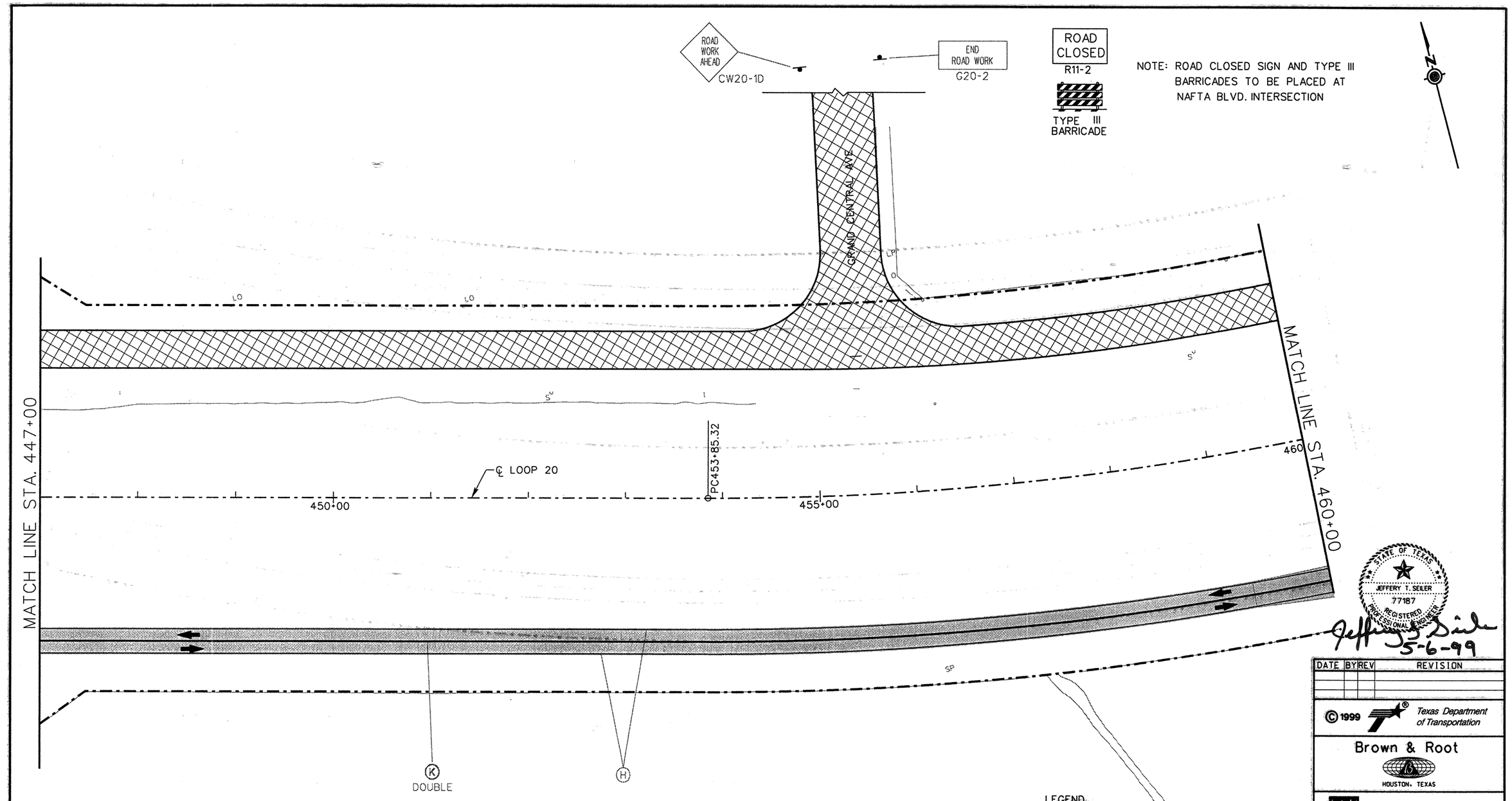

PAVEMENT MARKING LEGEND

(A) 0662 0501 WRK ZN PAV MRK REMOV (W) (4") (SLD)
(B) 0662 0502 WRK ZN PAV MRK REMOV (W) (4") (BRK)
(C) 0662 0507 WRK ZN PAV MRK REMOV (W) (8") (SLD)
(D) 0662 0511 WRK ZN PAV MRK REMOV (W) (24") (SLD)
(E) 0662 0523 WRK ZN PAV MRK REMOV (Y) (4") (SLD)
(F) 0662 0525 WRK ZN PAV MRK REMOV (Y) (4") (DOT)
(G) 0662 0532 WRK ZN PAV MRK REMOV (Y) (24") (SLD)
(H) 0662 0549 WRK ZN PAV MRK NON-REMOV (W) (4") (SLD)
(I) 0662 0553 WRK ZN PAV MRK NON-REMOV (W) (8") (SLD)
(J) 0662 0557 WRK ZN PAV MRK NON-REMOV (W) (24") (SLD)
(K) 0662 0569 WRK ZN PAV MRK NON-REMOV (Y) (4") (SLD)

LEGEND

- PERMANENT CONSTRUCTION THIS PHASE
- PERMANENT CONSTRUCTION PREVIOUS PHASE
- TEMPORARY CONSTRUCTION THIS PHASE
- TEMPORARY CONSTRUCTION PREVIOUS PHASE
- PLASTIC DRUMS
- TRAFFIC LANES
- PCTB PORTABLE CONCRETE TRAFFIC BARRIER
- XXX SIGN PLACED IN PREVIOUS PHASE
- RIGHT OF WAY
- P PERMANENT SIGN

STATE OF TEXAS
JEFFERY T. SEILER
77187
REGISTERED PROFESSIONAL ENGINEER

Jeffery T. Seiler
5-6-99

DATE	BY	REV	REVISION

© 1999 Texas Department of Transportation

Brown & Root
HOUSTON, TEXAS

RODRIGUEZ & HUGGINS, INC.
CONSULTING ENGINEERS
11824 JOLLYVILLE ROAD SUITE 402
AUSTIN, TEXAS 78759
PHONE: 512 335 1754 FAX: 512 335 1799

LOOP 20
TRAFFIC CONTROL PLAN
PHASE IV

0 25 50 100

SHEET 3 OF 7

FED RD DIV NO	STATE PROJECT NO		SHEET NO
6			195
STATE	STATE DIST NO		COUNTY
TEXAS	22		WEBB
CONT	SECT	JOB	HIGHWAY NO
0086	14	023	LOOP 20

80903\Mfg Interchange\mtTC608.dgn

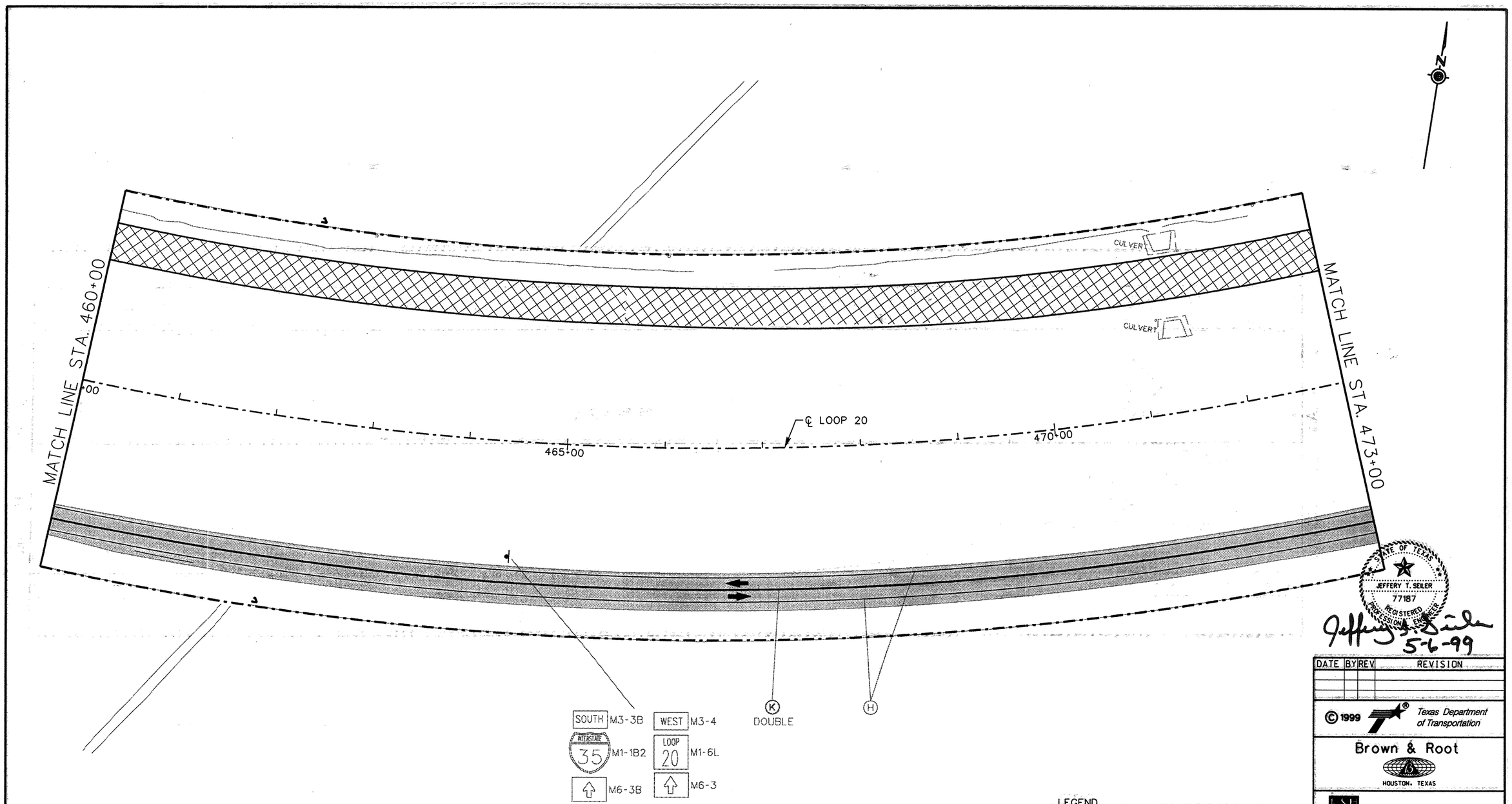

PAVEMENT MARKING LEGEND

(A) 0662 0501 WRK ZN PAV MRK REMOV (W) (4") (SLD)
(B) 0662 0502 WRK ZN PAV MRK REMOV (W) (4") (BRK)
(C) 0662 0507 WRK ZN PAV MRK REMOV (W) (8") (SLD)
(D) 0662 0511 WRK ZN PAV MRK REMOV (W) (24") (SLD)
(E) 0662 0523 WRK ZN PAV MRK REMOV (Y) (4") (SLD)
(F) 0662 0525 WRK ZN PAV MRK REMOV (Y) (4") (DOT)
(G) 0662 0532 WRK ZN PAV MRK REMOV (Y) (24") (SLD)
(H) 0662 0549 WRK ZN PAV MRK NON-REMOV (W) (4") (SLD)
(I) 0662 0553 WRK ZN PAV MRK NON-REMOV (W) (8") (SLD)
(J) 0662 0557 WRK ZN PAV MRK NON-REMOV (W) (24") (SLD)
(K) 0662 0569 WRK ZN PAV MRK NON-REMOV (Y) (4") (SLD)

LEGEND

- PERMANENT CONSTRUCTION THIS PHASE
- PERMANENT CONSTRUCTION PREVIOUS PHASE
- TEMPORARY CONSTRUCTION THIS PHASE
- TEMPORARY CONSTRUCTION PREVIOUS PHASE
- PLASTIC DRUMS
- TRAFFIC LANES
- PCTB PORTABLE CONCRETE TRAFFIC BARRIER
- XXX XXX SIGN PLACED IN PREVIOUS PHASE
- RIGHT OF WAY
- P PERMANENT SIGN

STATE OF TEXAS
JEFFERY T. SEILER
77187
REGISTERED PROFESSIONAL ENGINEER

Jeffery T. Seiler
5-6-99

DATE	BY	REV	REVISION

© 1999 Texas Department of Transportation

Brown & Root
HOUSTON, TEXAS

RSH
RODRIGUEZ & HUGGINS, INC.
CONSULTING ENGINEERS
11824 JOLLYVILLE ROAD SUITE 402
AUSTIN, TEXAS 78759
PHONE: 512 335 1754 FAX: 512 335 1799

LOOP 20
TRAFFIC CONTROL PLAN
PHASE IV

0 25 50 100

SHEET 4 OF 7

FED RD DIV NO	STATE PROJECT NO		SHEET NO
6			196
STATE	STATE DIST NO		COUNTY
TEXAS	22		WEBB
CONT	SECT	JOB	HIGHWAY NO
0086	14	023	LOOP 20

80903\Mlo Interchange\mlTC609.dgn

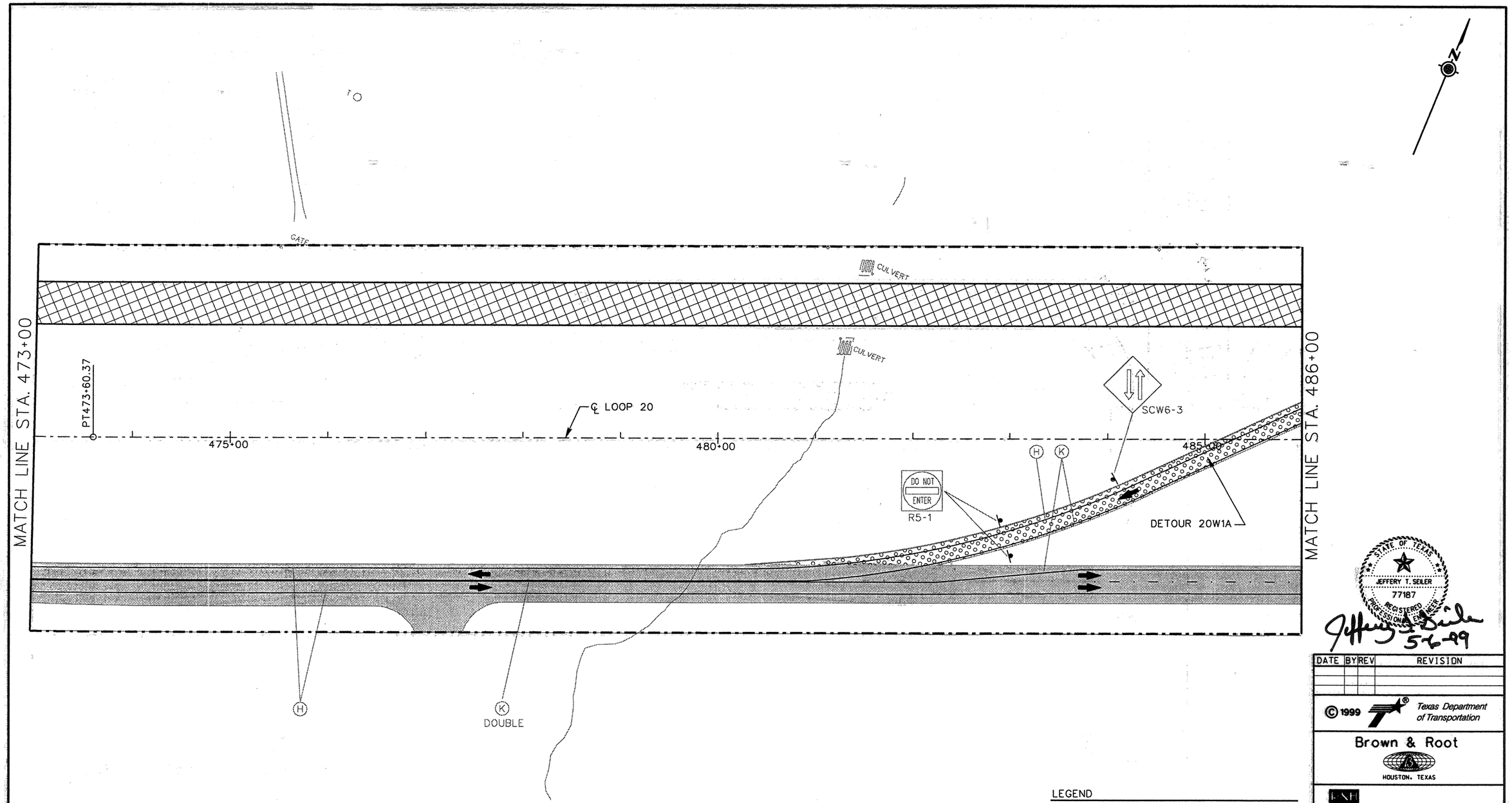

PAVEMENT MARKING LEGEND

(A) 0662 0501 WRK ZN PAV MRK REMOV (W) (4") (SLD)
(B) 0662 0502 WRK ZN PAV MRK REMOV (W) (4") (BRK)
(C) 0662 0507 WRK ZN PAV MRK REMOV (W) (8") (SLD)
(D) 0662 0511 WRK ZN PAV MRK REMOV (W) (24") (SLD)
(E) 0662 0523 WRK ZN PAV MRK REMOV (Y) (4") (SLD)
(F) 0662 0525 WRK ZN PAV MRK REMOV (Y) (4") (DOT)
(G) 0662 0532 WRK ZN PAV MRK REMOV (Y) (24") (SLD)
(H) 0662 0549 WRK ZN PAV MRK NON-REMOV (W) (4") (SLD)
(I) 0662 0553 WRK ZN PAV MRK NON-REMOV (W) (8") (SLD)
(J) 0662 0557 WRK ZN PAV MRK NON-REMOV (W) (24") (SLD)
(K) 0662 0569 WRK ZN PAV MRK NON-REMOV (Y) (4") (SLD)

LEGEND

- PERMANENT CONSTRUCTION THIS PHASE
- PERMANENT CONSTRUCTION PREVIOUS PHASE
- TEMPORARY CONSTRUCTION THIS PHASE
- TEMPORARY CONSTRUCTION PREVIOUS PHASE
- PLASTIC DRUMS
- TRAFFIC LANES
- PCTB — PORTABLE CONCRETE TRAFFIC BARRIER
- XXX XXX — SIGN PLACED IN PREVIOUS PHASE
- RIGHT OF WAY
- P — PERMANENT SIGN

STATE OF TEXAS
JEFFERY T. SEILER
77187
REGISTERED PROFESSIONAL ENGINEER

Jeffery T. Seiler 5-6-99

DATE	BY	REV	REVISION

© 1999 Texas Department of Transportation

Brown & Root
HOUSTON, TEXAS

RODRIGUEZ & HUGGINS, INC.
CONSULTING ENGINEERS
11824 JOLLYVILLE ROAD SUITE 402
AUSTIN, TEXAS 78759
PHONE: 512 335 1754 FAX: 512 335 1799

LOOP 20

TRAFFIC CONTROL PLAN PHASE IV

0 25 50 100

SHEET 5 OF 7

FED RD DIV NO	STATE PROJECT NO		SHEET NO
6			197
STATE	STATE DIST NO		COUNTY
TEXAS	22		WEBB
CONT	SECT	JOB	HIGHWAY NO
0086	14	023	LOOP 20

8080A\Wfb_interchange\mTC810.dgn

PAVEMENT MARKING LEGEND

- (A) 0662 0501 WRK ZN PAV MRK REMOV (W) (4") (SLD)
- (B) 0662 0502 WRK ZN PAV MRK REMOV (W) (4") (BRK)
- (C) 0662 0507 WRK ZN PAV MRK REMOV (W) (8") (SLD)
- (D) 0662 0511 WRK ZN PAV MRK REMOV (W) (24") (SLD)
- (E) 0662 0523 WRK ZN PAV MRK REMOV (Y) (4") (SLD)
- (F) 0662 0525 WRK ZN PAV MRK REMOV (Y) (4") (DOT)
- (G) 0662 0532 WRK ZN PAV MRK REMOV (Y) (24") (SLD)
- (H) 0662 0549 WRK ZN PAV MRK NON-REMOV (W) (4") (SLD)
- (I) 0662 0553 WRK ZN PAV MRK NON-REMOV (W) (8") (SLD)
- (J) 0662 0557 WRK ZN PAV MRK NON-REMOV (W) (24") (SLD)
- (K) 0662 0569 WRK ZN PAV MRK NON-REMOV (Y) (4") (SLD)

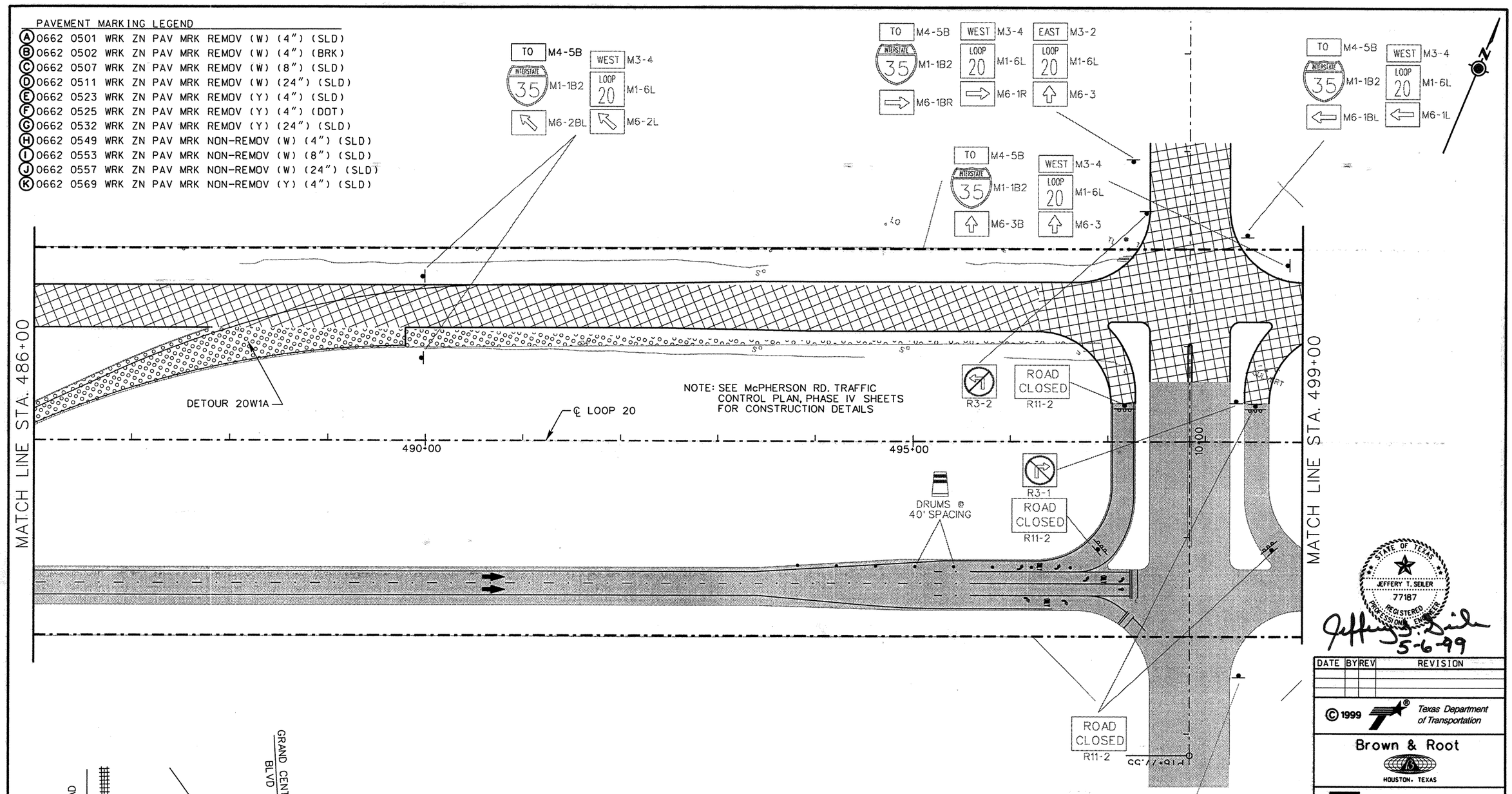

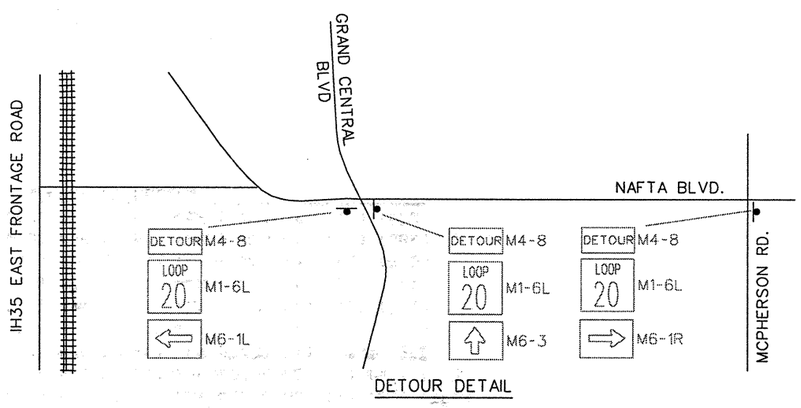

DETOUR DETAIL

LEGEND

- PERMANENT CONSTRUCTION THIS PHASE
- PERMANENT CONSTRUCTION PREVIOUS PHASE
- TEMPORARY CONSTRUCTION THIS PHASE
- TEMPORARY CONSTRUCTION PREVIOUS PHASE
- PLASTIC DRUMS
- TRAFFIC LANES
- PCTB PORTABLE CONCRETE TRAFFIC BARRIER
- XXX XXX SIGN PLACED IN PREVIOUS PHASE
- RIGHT OF WAY
- P PERMANENT SIGN

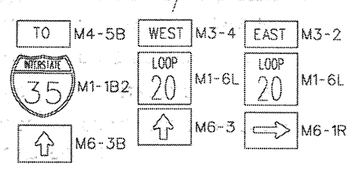

STATE OF TEXAS
JEFFERY T. SEILER
77187
REGISTERED PROFESSIONAL ENGINEER

Jeffery T. Seiler
5-6-99

DATE	BY	REV	REVISION

© 1999 Texas Department of Transportation

Brown & Root
HOUSTON, TEXAS

RNH
RODRIGUEZ & HUGGINS, INC.
CONSULTING ENGINEERS
11824 JOLLYVILLE ROAD SUITE 402
AUSTIN, TEXAS 78759
PHONE: 512 335 1754 FAX: 512 335 1799

LOOP 20
TRAFFIC CONTROL PLAN PHASE IV

0 25 50 100

SHEET 6 OF 7

FED RD DIV NO	STATE PROJECT NO		SHEET NO
6			198
STATE	STATE DIST NO		COUNTY
TEXAS	22		WEBB
CONT	SECT	JOB	HIGHWAY NO
0086	14	023	LOOP 20

80903\Mio_Interchange\mi1C611.dgn

NOTE: SEE McPHERSON RD. TRAFFIC CONTROL PLAN, PHASE IV SHEETS FOR CONSTRUCTION DETAILS

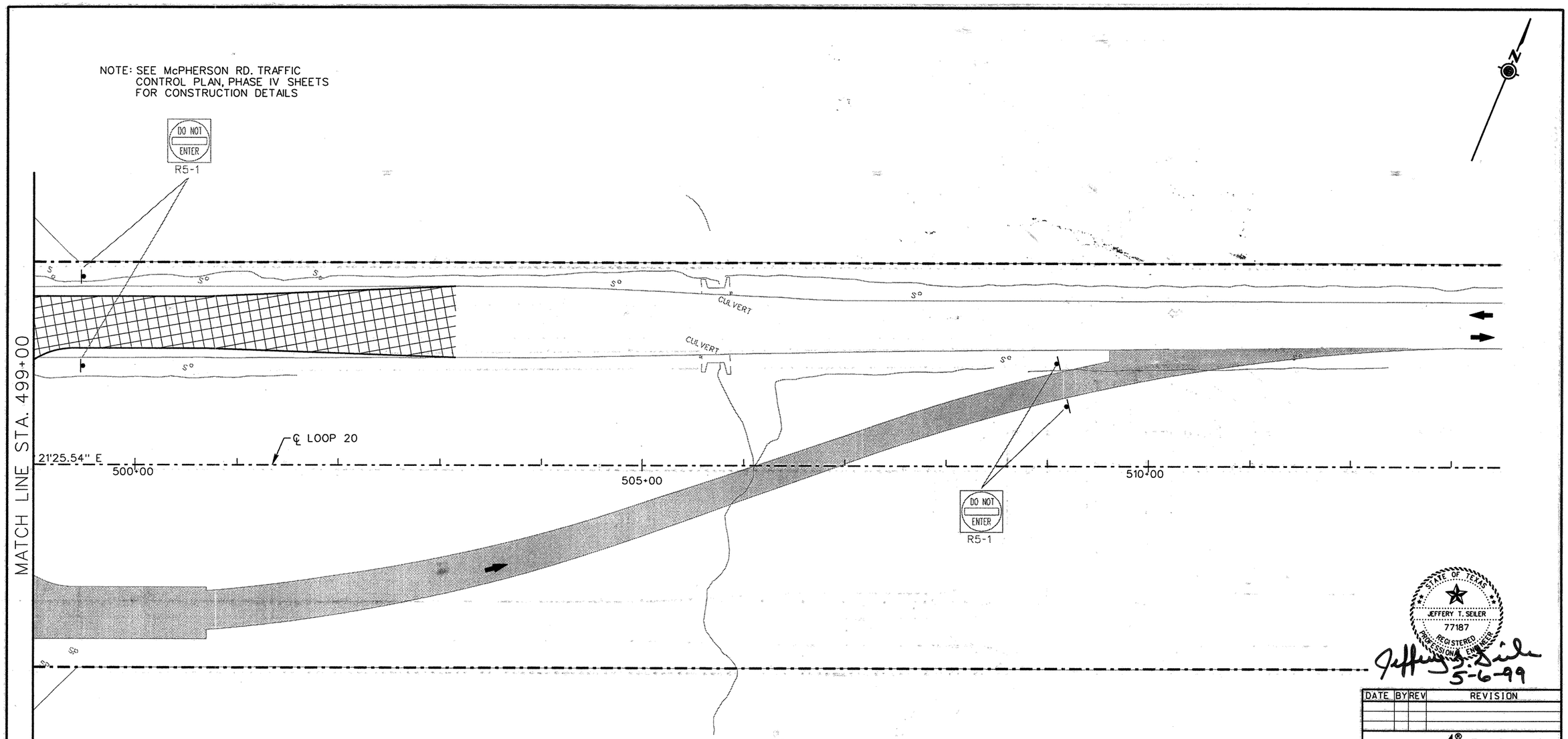

PAVEMENT MARKING LEGEND

(A) 0662 0501 WRK ZN PAV MRK REMOV (W) (4") (SLD)
(B) 0662 0502 WRK ZN PAV MRK REMOV (W) (4") (BRK)
(C) 0662 0507 WRK ZN PAV MRK REMOV (W) (8") (SLD)
(D) 0662 0511 WRK ZN PAV MRK REMOV (W) (24") (SLD)
(E) 0662 0523 WRK ZN PAV MRK REMOV (Y) (4") (SLD)
(F) 0662 0525 WRK ZN PAV MRK REMOV (Y) (4") (DOT)
(G) 0662 0532 WRK ZN PAV MRK REMOV (Y) (24") (SLD)
(H) 0662 0549 WRK ZN PAV MRK NON-REMOV (W) (4") (SLD)
(I) 0662 0553 WRK ZN PAV MRK NON-REMOV (W) (8") (SLD)
(J) 0662 0557 WRK ZN PAV MRK NON-REMOV (W) (24") (SLD)
(K) 0662 0569 WRK ZN PAV MRK NON-REMOV (Y) (4") (SLD)

LEGEND

- PERMANENT CONSTRUCTION THIS PHASE
- PERMANENT CONSTRUCTION PREVIOUS PHASE
- TEMPORARY CONSTRUCTION THIS PHASE
- TEMPORARY CONSTRUCTION PREVIOUS PHASE
- PLASTIC DRUMS
- TRAFFIC LANES
- PCTB PORTABLE CONCRETE TRAFFIC BARRIER
- SIGN PLACED IN PREVIOUS PHASE
- RIGHT OF WAY
- [P] PERMANENT SIGN

STATE OF TEXAS
JEFFERY T. SEILER
77187
REGISTERED PROFESSIONAL ENGINEER
Jeffery T. Seiler
5-6-99

DATE	BY	REV	REVISION

© 1999 Texas Department of Transportation

Brown & Root
HOUSTON, TEXAS

RODRIGUEZ & HUGGINS, INC.
CONSULTING ENGINEERS
11824 JOLLYVILLE ROAD SUITE 402
AUSTIN, TEXAS 78759
PHONE: 512 335 1754 FAX: 512 335 1799

LOOP 20
TRAFFIC CONTROL PLAN PHASE IV

0 25 50 100

SHEET 7 OF 7

FED RD DIV NO	STATE PROJECT NO		SHEET NO
6			199
STATE	STATE DIST NO		COUNTY
TEXAS	22		WEBB
CONT	SECT	JOB	HIGHWAY NO
0086	14	023	LOOP 20

80903\Mpo_Interchange\mITG012.dgn

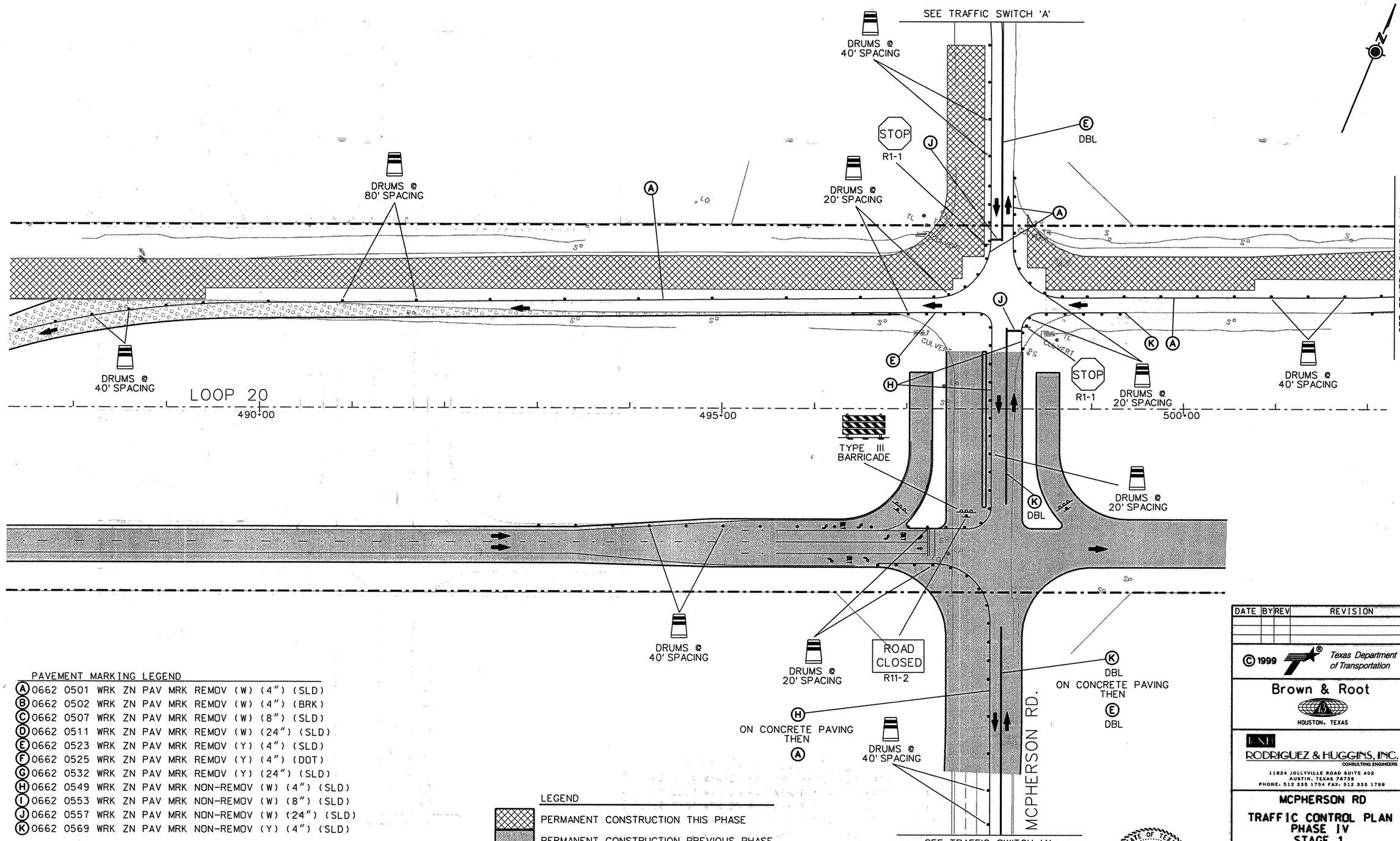

PAVEMENT MARKING LEGEND

(A) 0662 0501 WRK ZN PAV MRK REMOV (W) (4") (SLD)
(B) 0662 0502 WRK ZN PAV MRK REMOV (W) (4") (BRK)
(C) 0662 0507 WRK ZN PAV MRK REMOV (W) (8") (SLD)
(D) 0662 0511 WRK ZN PAV MRK REMOV (W) (24") (SLD)
(E) 0662 0523 WRK ZN PAV MRK REMOV (Y) (4") (SLD)
(F) 0662 0525 WRK ZN PAV MRK REMOV (Y) (4") (DOT)
(G) 0662 0532 WRK ZN PAV MRK REMOV (Y) (24") (SLD)
(H) 0662 0549 WRK ZN PAV MRK NON-REMOV (W) (4") (SLD)
(I) 0662 0553 WRK ZN PAV MRK NON-REMOV (W) (8") (SLD)
(J) 0662 0557 WRK ZN PAV MRK NON-REMOV (W) (24") (SLD)
(K) 0662 0569 WRK ZN PAV MRK NON-REMOV (Y) (4") (SLD)

LEGEND

- PERMANENT CONSTRUCTION THIS PHASE
- PERMANENT CONSTRUCTION PREVIOUS PHASE
- TEMPORARY CONSTRUCTION PREVIOUS PHASE
- PLASTIC DRUMS
- TRAFFIC LANES

NOTE: FOR ADVANCE SIGNING AND TRAFFIC CONTROL BEYOND INTERSECTION SEE TRAFFIC SWITCH 'A' AND TRAFFIC SWITCH 'B'.

DATE	BY	REV	REVISION

© 1999 Texas Department of Transportation

Brown & Root
HOUSTON, TEXAS

RODRIGUEZ & HUGGINS, INC.
CONSULTING ENGINEERS
11824 JOLLYVILLE ROAD SUITE 402
AUSTIN, TEXAS 78759
PHONE: 512 335 1754 FAX: 512 335 1799

MCPHERSON RD

TRAFFIC CONTROL PLAN
PHASE IV
STAGE 1

0 25 50 100

SHEET 1 OF 5

STATE OF TEXAS
JEFFERY T. SEILER
77187
REGISTERED PROFESSIONAL ENGINEER

Jeffery T. Seiler
5-6-99

FED RD DIV NO	STATE PROJECT NO		SHEET NO
6			200
STATE	STATE DIST NO		COUNTY
TEXAS	22		WEBB
CONT	SECT	JOB	HIGHWAY NO
0086	14	023	LOOP 20

80903\vmilc524

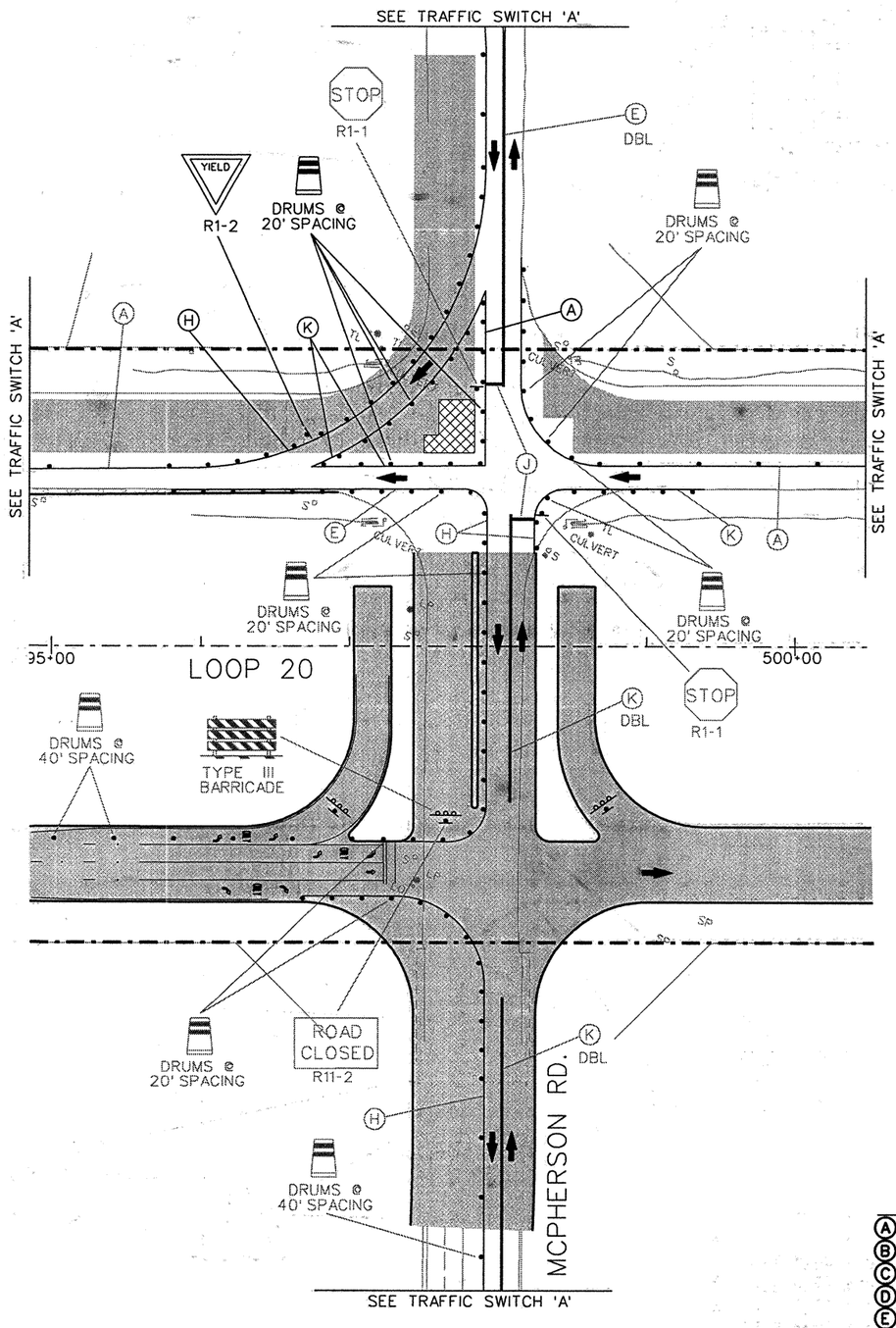

STAGE 2

NOTE: FOR ADVANCE SIGNING AND TRAFFIC CONTROL BEYOND INTERSECTION SEE TRAFFIC SWITCH 'A' AND TRAFFIC SWITCH 'B'.

LEGEND

- PERMANENT CONSTRUCTION THIS PHASE
- PERMANENT CONSTRUCTION PREVIOUS PHASE OR STAGE
- TEMPORARY CONSTRUCTION PREVIOUS PHASE
- PLASTIC DRUMS
- TRAFFIC LANES

PAVEMENT MARKING LEGEND

A	0662	0501	WRK	ZN	PAV	MRK	REMOV	(W)	(4") (SLD)
B	0662	0502	WRK	ZN	PAV	MRK	REMOV	(W)	(4") (BRK)
C	0662	0507	WRK	ZN	PAV	MRK	REMOV	(W)	(8") (SLD)
D	0662	0511	WRK	ZN	PAV	MRK	REMOV	(W)	(24") (SLD)
E	0662	0523	WRK	ZN	PAV	MRK	REMOV	(Y)	(4") (SLD)
F	0662	0525	WRK	ZN	PAV	MRK	REMOV	(Y)	(4") (DOT)
G	0662	0532	WRK	ZN	PAV	MRK	REMOV	(Y)	(24") (SLD)
H	0662	0549	WRK	ZN	PAV	MRK	NON-REMOV	(W)	(4") (SLD)
I	0662	0553	WRK	ZN	PAV	MRK	NON-REMOV	(W)	(8") (SLD)
J	0662	0557	WRK	ZN	PAV	MRK	NON-REMOV	(W)	(24") (SLD)
K	0662	0569	WRK	ZN	PAV	MRK	NON-REMOV	(Y)	(4") (SLD)

STATE OF TEXAS
JEFFERY T. SEILER
77187
REGISTERED PROFESSIONAL ENGINEER

Jeffery T. Seiler
6-6-99

DATE	BY	REV	REVISION

© 1999 Texas Department of Transportation

Brown & Root
HOUSTON, TEXAS

RODRIGUEZ & HUGGINS, INC.
CONSULTING ENGINEERS
11824 JOLLYVILLE ROAD SUITE 402
AUSTIN, TEXAS 78759
PHONE: 512 335 1754 FAX: 512 335 1799

MCPHERSON RD

TRAFFIC CONTROL PLAN
PHASE IV
STAGE 2

0 25 50 100

SHEET 2 OF 5

FED RD DIV NO	STATE PROJECT NO		SHEET NO
6			201
STATE	STATE DIST NO	COUNTY	
TEXAS	22	WEBB	
CONT	SECT	JOB	HIGHWAY NO
0086	14	023	LOOP 20

80903\mltc525

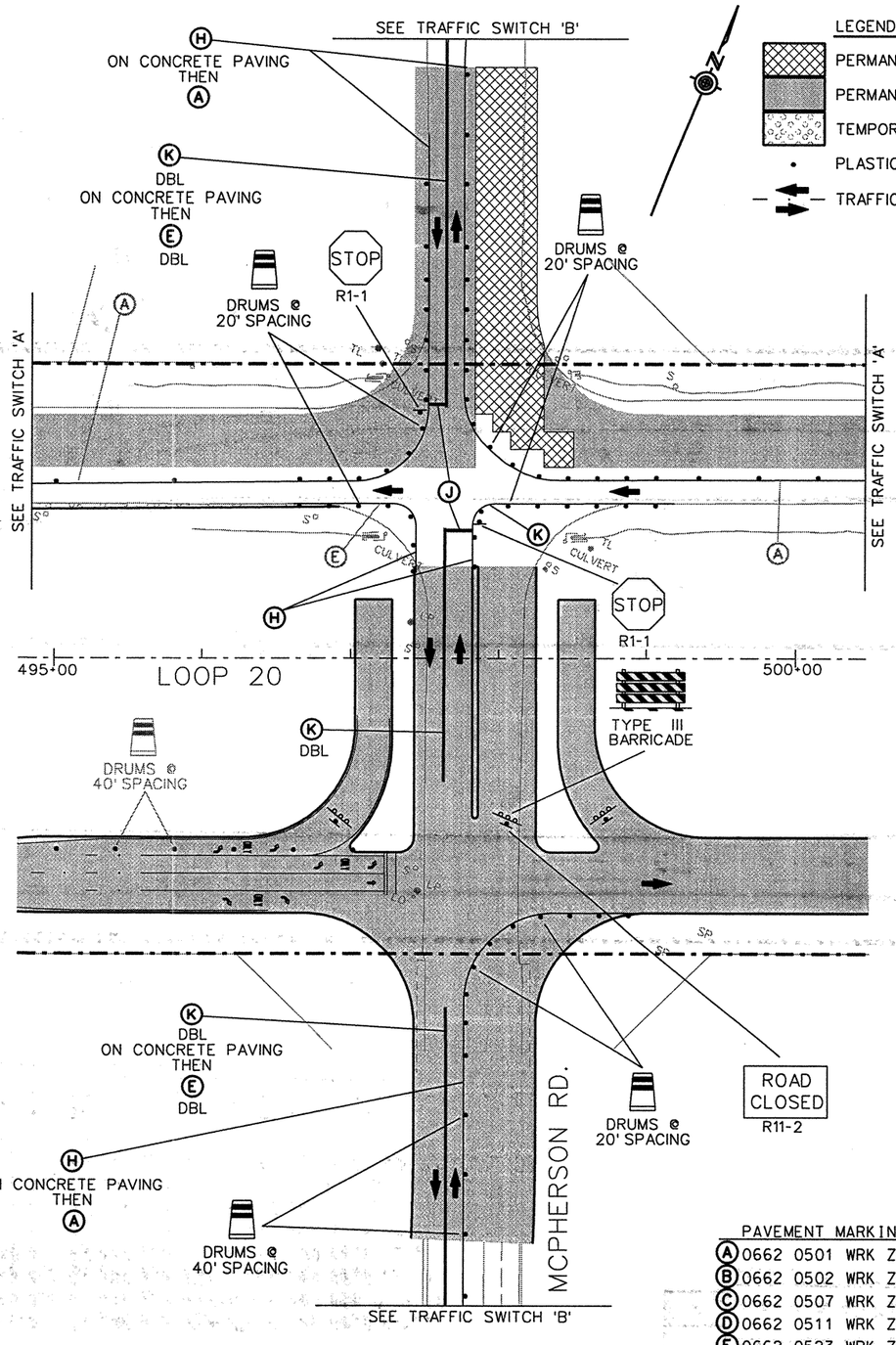

STAGE 3

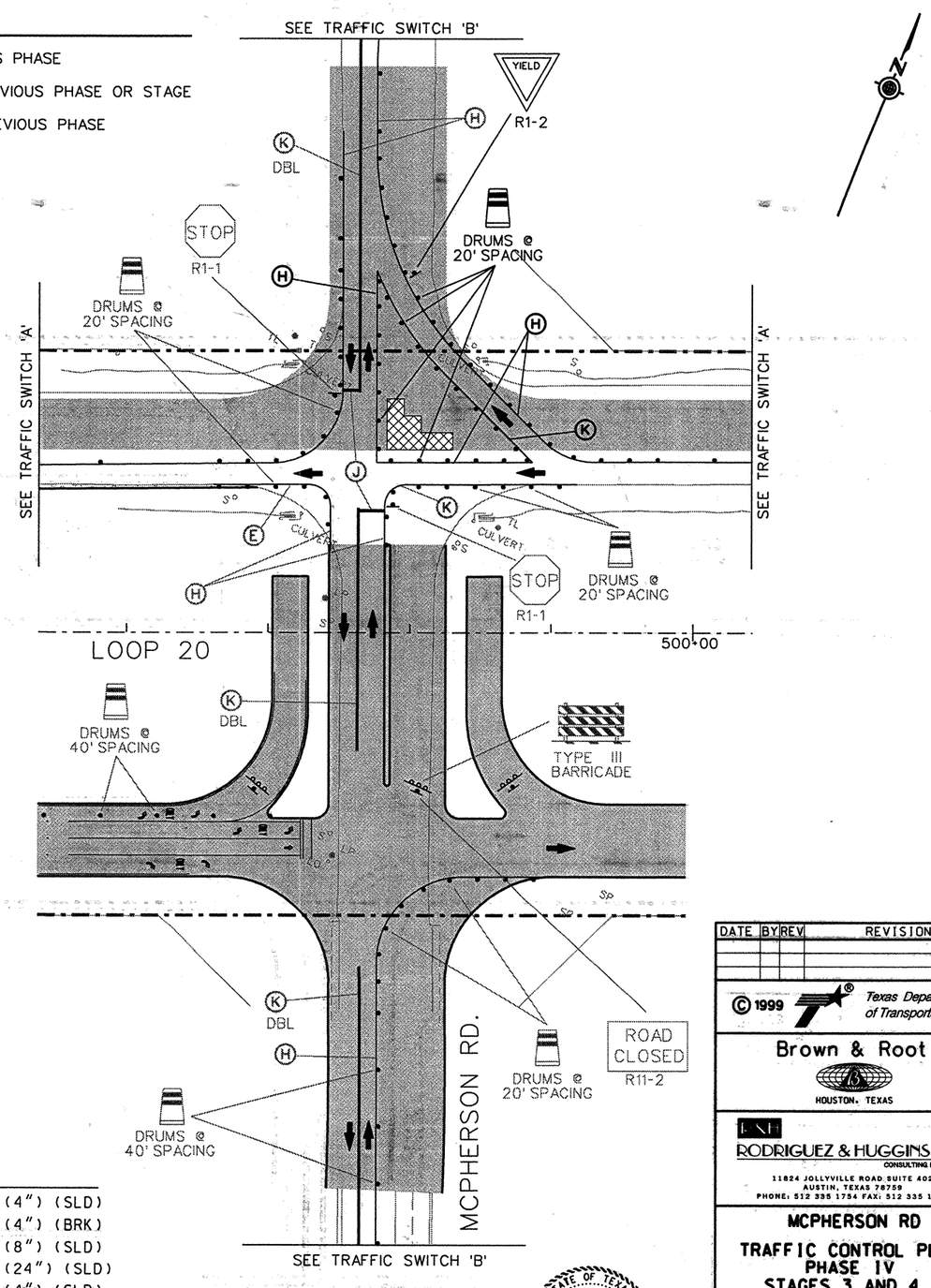

STAGE 4

LEGEND

- PERMANENT CONSTRUCTION THIS PHASE
- PERMANENT CONSTRUCTION PREVIOUS PHASE OR STAGE
- TEMPORARY CONSTRUCTION PREVIOUS PHASE
- PLASTIC DRUMS
- TRAFFIC LANES

PAVEMENT MARKING LEGEND

A	0662	0501	WRK ZN PAV MRK	REMOV	(W)	(4")	(SLD)
B	0662	0502	WRK ZN PAV MRK	REMOV	(W)	(4")	(BRK)
C	0662	0507	WRK ZN PAV MRK	REMOV	(W)	(8")	(SLD)
D	0662	0511	WRK ZN PAV MRK	REMOV	(W)	(24")	(SLD)
E	0662	0523	WRK ZN PAV MRK	REMOV	(Y)	(4")	(SLD)
F	0662	0525	WRK ZN PAV MRK	REMOV	(Y)	(4")	(DOT)
G	0662	0532	WRK ZN PAV MRK	REMOV	(Y)	(24")	(SLD)
H	0662	0549	WRK ZN PAV MRK	NON-REMOV	(W)	(4")	(SLD)
I	0662	0553	WRK ZN PAV MRK	NON-REMOV	(W)	(8")	(SLD)
J	0662	0557	WRK ZN PAV MRK	NON-REMOV	(W)	(24")	(SLD)
K	0662	0569	WRK ZN PAV MRK	NON-REMOV	(Y)	(4")	(SLD)

NOTE: FOR ADVANCE SIGNING AND TRAFFIC CONTROL BEYOND INTERSECTION SEE TRAFFIC SWITCH 'A' AND TRAFFIC SWITCH 'B'.

STATE OF TEXAS
JEFFERY T. SEILER
77187
REGISTERED PROFESSIONAL ENGINEER

Jeffery T. Seiler
5-6-99

DATE	BY	REV	REVISION

© 1999 Texas Department of Transportation

Brown & Root
HOUSTON, TEXAS

RODRIGUEZ & HUGGINS, INC.
CONSULTING ENGINEERS
11824 JOLLYVILLE ROAD SUITE 402
AUSTIN, TEXAS 78759
PHONE: 512 335 1754 FAX: 512 335 1799

MCPHERSON RD

TRAFFIC CONTROL PLAN
PHASE IV
STAGES 3 AND 4

0 25 50 100

SHEET 3 OF 5

FED RD DIV NO	STATE PROJECT NO		SHEET NO
6			202
STATE	STATE DIST NO	COUNTY	
TEXAS	22	WEBB	
CONT	SECT	JOB	HIGHWAY NO
0086	14	023	LOOP 20

80903\mltc526

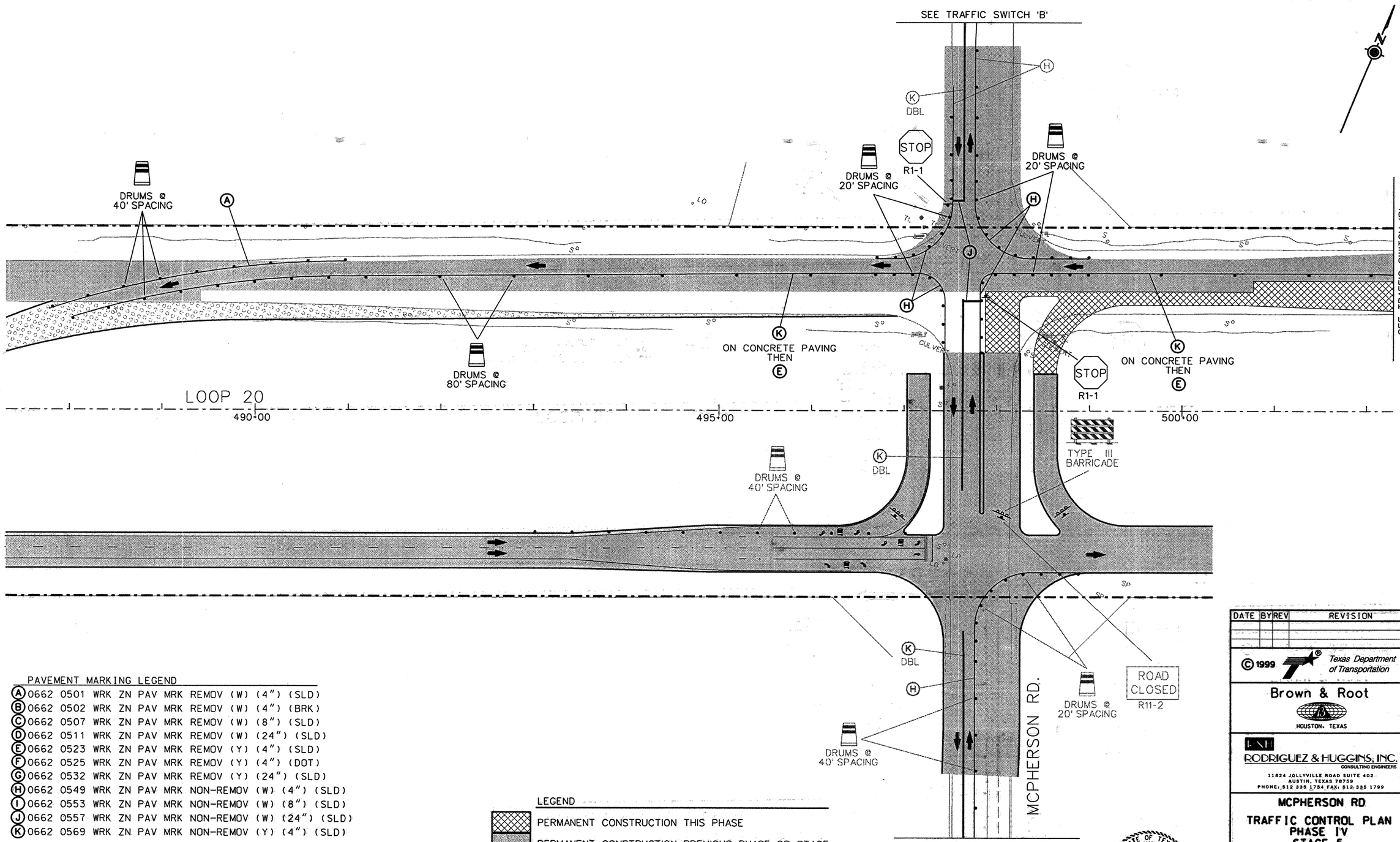

PAVEMENT MARKING LEGEND

(A) 0662 0501 WRK ZN PAV MRK REMOV (W) (4") (SLD)
(B) 0662 0502 WRK ZN PAV MRK REMOV (W) (4") (BRK)
(C) 0662 0507 WRK ZN PAV MRK REMOV (W) (8") (SLD)
(D) 0662 0511 WRK ZN PAV MRK REMOV (W) (24") (SLD)
(E) 0662 0523 WRK ZN PAV MRK REMOV (Y) (4") (SLD)
(F) 0662 0525 WRK ZN PAV MRK REMOV (Y) (4") (DOT)
(G) 0662 0532 WRK ZN PAV MRK REMOV (Y) (24") (SLD)
(H) 0662 0549 WRK ZN PAV MRK NON-REMOV (W) (4") (SLD)
(I) 0662 0553 WRK ZN PAV MRK NON-REMOV (W) (8") (SLD)
(J) 0662 0557 WRK ZN PAV MRK NON-REMOV (W) (24") (SLD)
(K) 0662 0569 WRK ZN PAV MRK NON-REMOV (Y) (4") (SLD)

LEGEND

- PERMANENT CONSTRUCTION THIS PHASE
- PERMANENT CONSTRUCTION PREVIOUS PHASE OR STAGE
- TEMPORARY CONSTRUCTION PREVIOUS PHASE
- PLASTIC DRUMS
- TRAFFIC LANES

NOTE: FOR ADVANCE SIGNING AND TRAFFIC CONTROL BEYOND INTERSECTION SEE TRAFFIC SWITCH 'A' AND TRAFFIC SWITCH 'B'.

STAGE 5

STATE OF TEXAS
JEFFERY T. SEILER
77187
REGISTERED PROFESSIONAL ENGINEER

Jeffery T. Seiler
5-6-99

DATE	BY	REV	REVISION

© 1999 Texas Department of Transportation

Brown & Root
HOUSTON, TEXAS

RHI
RODRIGUEZ & HUGGINS, INC.
CONSULTING ENGINEERS
11824 JOLLYVILLE ROAD SUITE 402
AUSTIN, TEXAS 78759
PHONE: 512 335 1784 FAX: 512 335 1799

MCPHERSON RD

TRAFFIC CONTROL PLAN
PHASE IV
STAGE 5

0 25 50 100

SHEET 4 OF 5

FED RD DIV NO	STATE PROJECT NO		SHEET NO
6			203
STATE	STATE DIST NO		COUNTY
TEXAS	22		WEBB
CONT	SECT	JOB	HIGHWAY NO
0086	14	023	LOOP 20

80903\mltc527

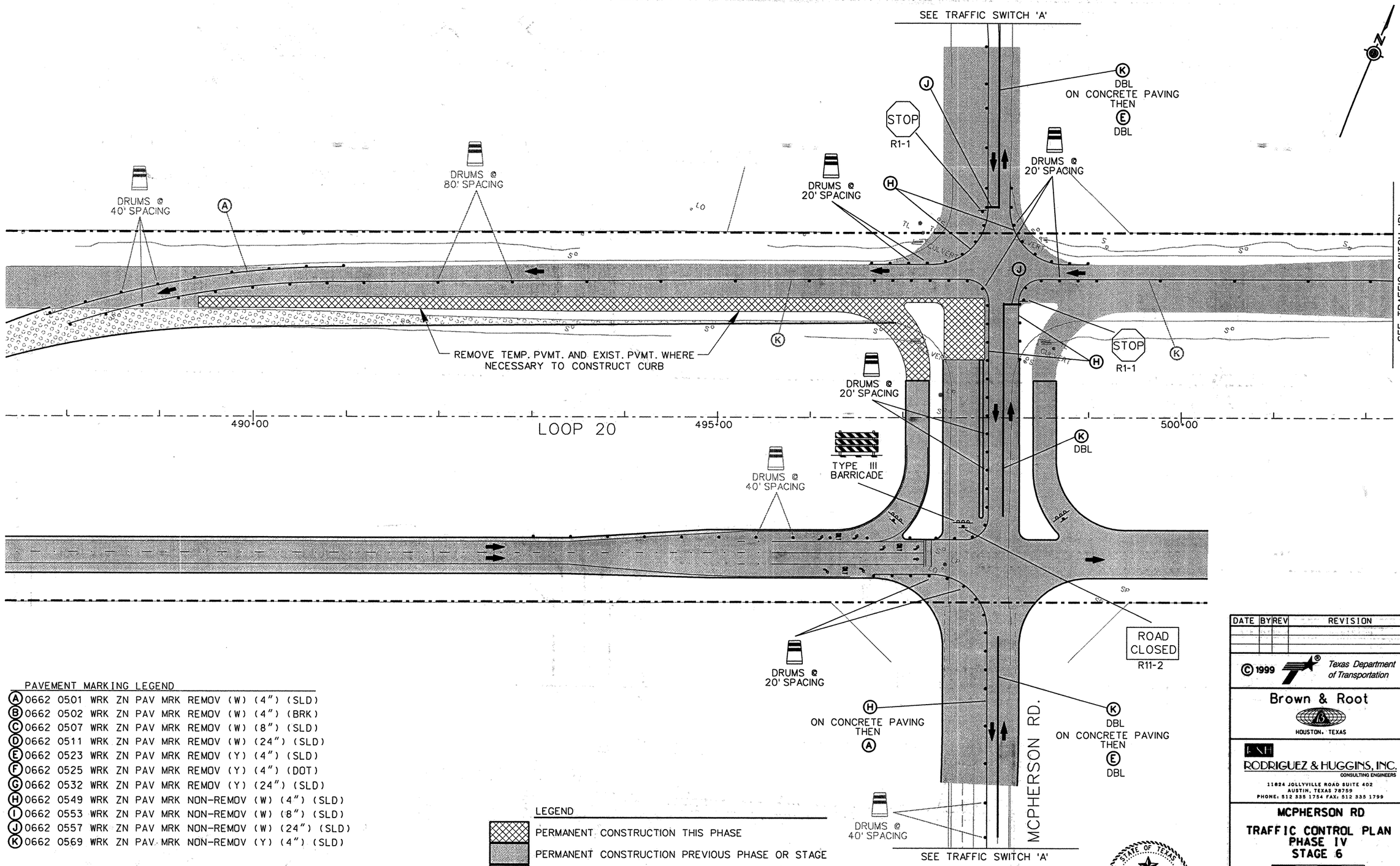

PAVEMENT MARKING LEGEND

- (A) 0662 0501 WRK ZN PAV MRK REMOV (W) (4") (SLD)
- (B) 0662 0502 WRK ZN PAV MRK REMOV (W) (4") (BRK)
- (C) 0662 0507 WRK ZN PAV MRK REMOV (W) (8") (SLD)
- (D) 0662 0511 WRK ZN PAV MRK REMOV (W) (24") (SLD)
- (E) 0662 0523 WRK ZN PAV MRK REMOV (Y) (4") (SLD)
- (F) 0662 0525 WRK ZN PAV MRK REMOV (Y) (4") (DOT)
- (G) 0662 0532 WRK ZN PAV MRK REMOV (Y) (24") (SLD)
- (H) 0662 0549 WRK ZN PAV MRK NON-REMOV (W) (4") (SLD)
- (I) 0662 0553 WRK ZN PAV MRK NON-REMOV (W) (8") (SLD)
- (J) 0662 0557 WRK ZN PAV MRK NON-REMOV (W) (24") (SLD)
- (K) 0662 0569 WRK ZN PAV MRK NON-REMOV (Y) (4") (SLD)

LEGEND

- PERMANENT CONSTRUCTION THIS PHASE
- PERMANENT CONSTRUCTION PREVIOUS PHASE OR STAGE
- TEMPORARY CONSTRUCTION PREVIOUS PHASE
- PLASTIC DRUMS
- TRAFFIC LANES

NOTE: FOR ADVANCE SIGNING AND TRAFFIC CONTROL BEYOND INTERSECTION SEE TRAFFIC SWITCH 'A' AND TRAFFIC SWITCH 'B'.

STATE OF TEXAS
JEFFERY T. SEILER
77187
REGISTERED PROFESSIONAL ENGINEER

Jeffery T. Seiler
5-6-99

DATE	BY	REV	REVISION

© 1999 Texas Department of Transportation

Brown & Root
HOUSTON, TEXAS

RNH
RODRIGUEZ & HUGGINS, INC.
CONSULTING ENGINEERS
11824 JOLLYVILLE ROAD SUITE 402
AUSTIN, TEXAS 78759
PHONE: 512 335 1754 FAX: 512 335 1799

MCPHERSON RD

TRAFFIC CONTROL PLAN
PHASE IV
STAGE 6

0 25 50 100

SHEET 5 OF 5

FED RD DIV NO	STATE PROJECT NO		SHEET NO
6			204
STATE	STATE DIST NO	COUNTY	
TEXAS	22	WEBB	
CONT	SECT	JOB	HIGHWAY NO
0086	14	023	LOOP 20

80903\mltc528

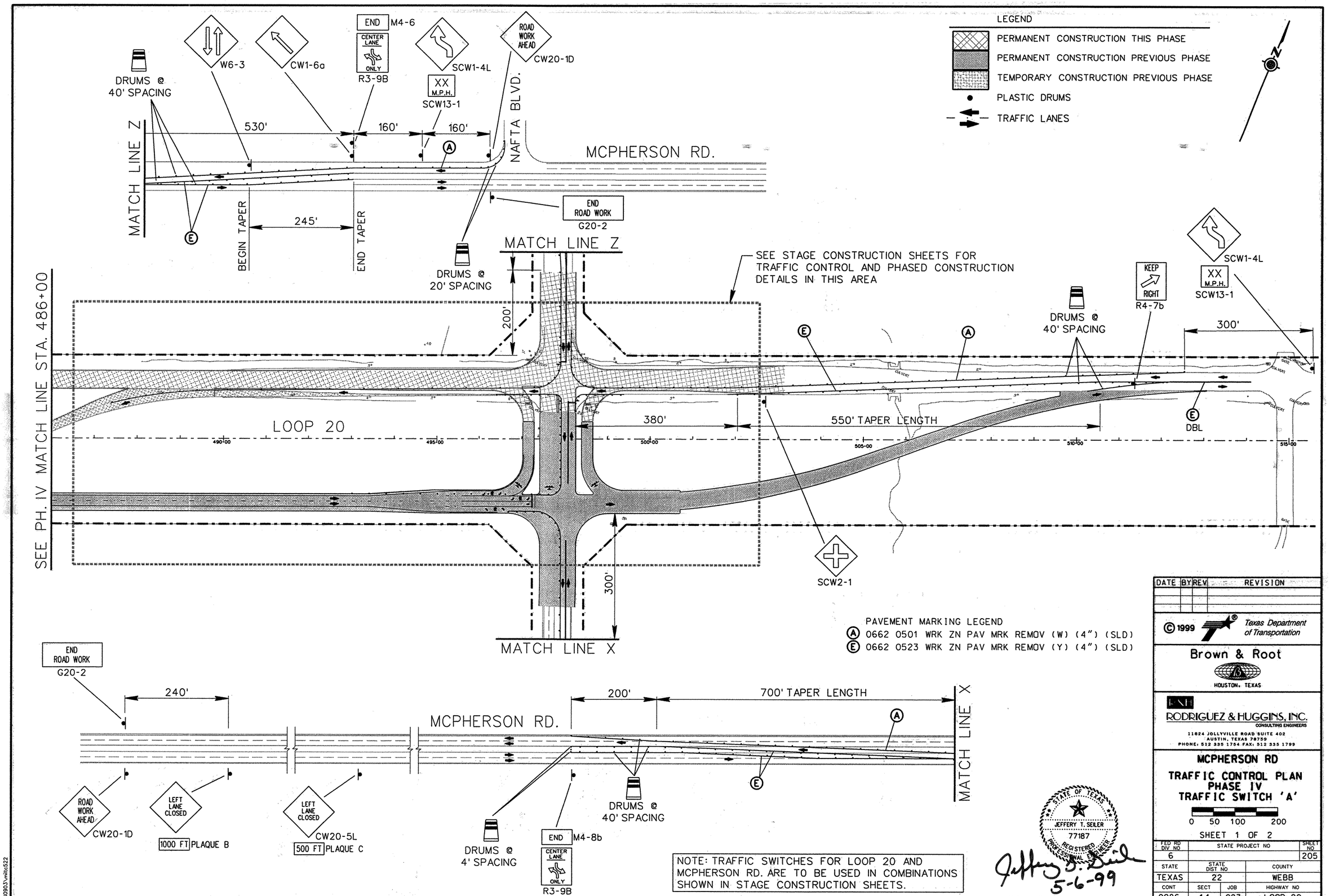

DATE	BY	REV	REVISION

© 1999 Texas Department of Transportation

Brown & Root
HOUSTON, TEXAS

RNH
RODRIGUEZ & HUGGINS, INC.
CONSULTING ENGINEERS
11824 JOLLYVILLE ROAD SUITE 402
AUSTIN, TEXAS 78759
PHONE: 512 335 1784 FAX: 512 335 1799

MCPHERSON RD

TRAFFIC CONTROL PLAN
PHASE IV
TRAFFIC SWITCH 'A'

0 50 100 200

SHEET 1 OF 2

FED RD DIV NO	STATE PROJECT NO		SHEET NO
6			205
STATE	STATE DIST NO	COUNTY	
TEXAS	22	WEBB	
CONT	SECT	JOB	HIGHWAY NO
0086	14	023	LOOP 20

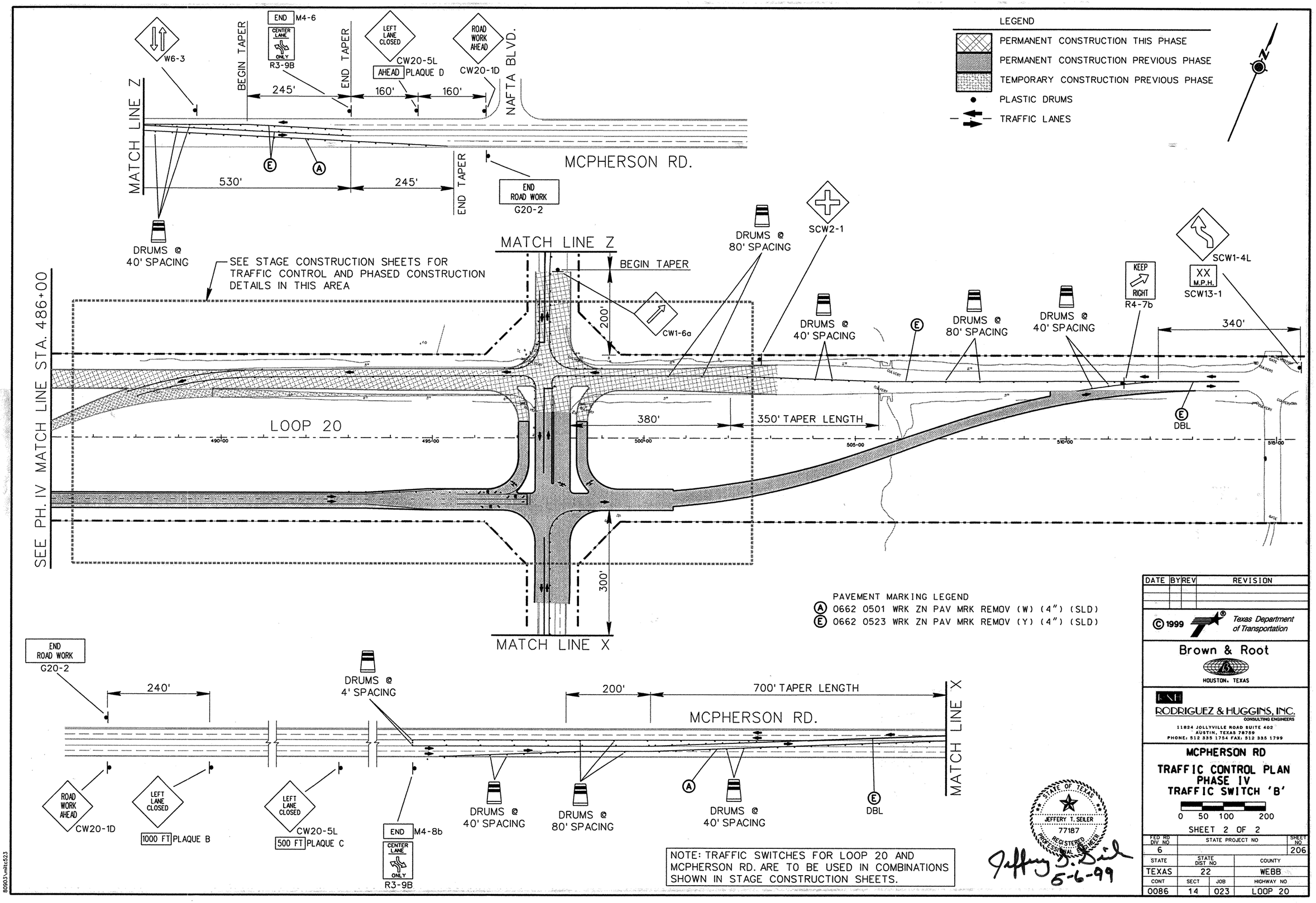
LEGEND
PERMANENT CONSTRUCTION THIS PHASE
PERMANENT CONSTRUCTION PREVIOUS PHASE
TEMPORARY CONSTRUCTION PREVIOUS PHASE
PLASTIC DRUMS
TRAFFIC LANES
W6-3
BEGIN TAPER
END M4-6
CENTER LANE ONLY
R3-9B
END TAPER
LEFT LANE CLOSED
CW20-5L
AHEAD PLAQUE D
ROAD WORK AHEAD
CW20-1D
NAFTA BLVD.
245'
160'
160'
MATCH LINE Z
MCPHERSON RD.
530'
245'
END TAPER
END ROAD WORK
G20-2
DRUMS @ 40' SPACING
SEE STAGE CONSTRUCTION SHEETS FOR TRAFFIC CONTROL AND PHASED CONSTRUCTION DETAILS IN THIS AREA
MATCH LINE Z
BEGIN TAPER
200'
CW1-6a
DRUMS @ 80' SPACING
SCW2-1
DRUMS @ 40' SPACING
DRUMS @ 80' SPACING
DRUMS @ 40' SPACING
KEEP RIGHT
R4-7b
SCW1-4L
XX M.P.H.
SCW13-1
340'
SEE PH. IV MATCH LINE STA. 486+00
LOOP 20
380'
350' TAPER LENGTH
DBL
300'
MATCH LINE X
PAVEMENT MARKING LEGEND
A 0662 0501 WRK ZN PAV MRK REMOV (W) (4") (SLD)
E 0662 0523 WRK ZN PAV MRK REMOV (Y) (4") (SLD)
END ROAD WORK
G20-2
240'
DRUMS @ 4' SPACING
200'
700' TAPER LENGTH
MCPHERSON RD.
MATCH LINE X
ROAD WORK AHEAD
CW20-1D
LEFT LANE CLOSED
1000 FT PLAQUE B
LEFT LANE CLOSED
CW20-5L
500 FT PLAQUE C
END M4-8b
CENTER LANE ONLY
R3-9B
DRUMS @ 40' SPACING
DRUMS @ 80' SPACING
DRUMS @ 40' SPACING
DBL
NOTE: TRAFFIC SWITCHES FOR LOOP 20 AND MCPHERSON RD. ARE TO BE USED IN COMBINATIONS SHOWN IN STAGE CONSTRUCTION SHEETS.
STATE OF TEXAS
JEFFERY T. SEILER
77187
REGISTERED PROFESSIONAL ENGINEER
5-6-99
DATE BY REV REVISION
© 1999 Texas Department of Transportation
Brown & Root
HOUSTON, TEXAS
RODRIGUEZ & HUGGINS, INC.
CONSULTING ENGINEERS
11824 JOLLYVILLE ROAD SUITE 402
AUSTIN, TEXAS 78759
PHONE: 512 335 1754 FAX: 512 335 1799
MCPHERSON RD
TRAFFIC CONTROL PLAN
PHASE IV
TRAFFIC SWITCH 'B'
0 50 100 200
SHEET 2 OF 2
FED RD DIV NO 6
STATE PROJECT NO
SHEET NO 206
STATE TEXAS
STATE DIST NO 22
COUNTY WEBB
CONT 0086
SECT 14
JOB 023
HIGHWAY NO LOOP 20
80903\mltc523

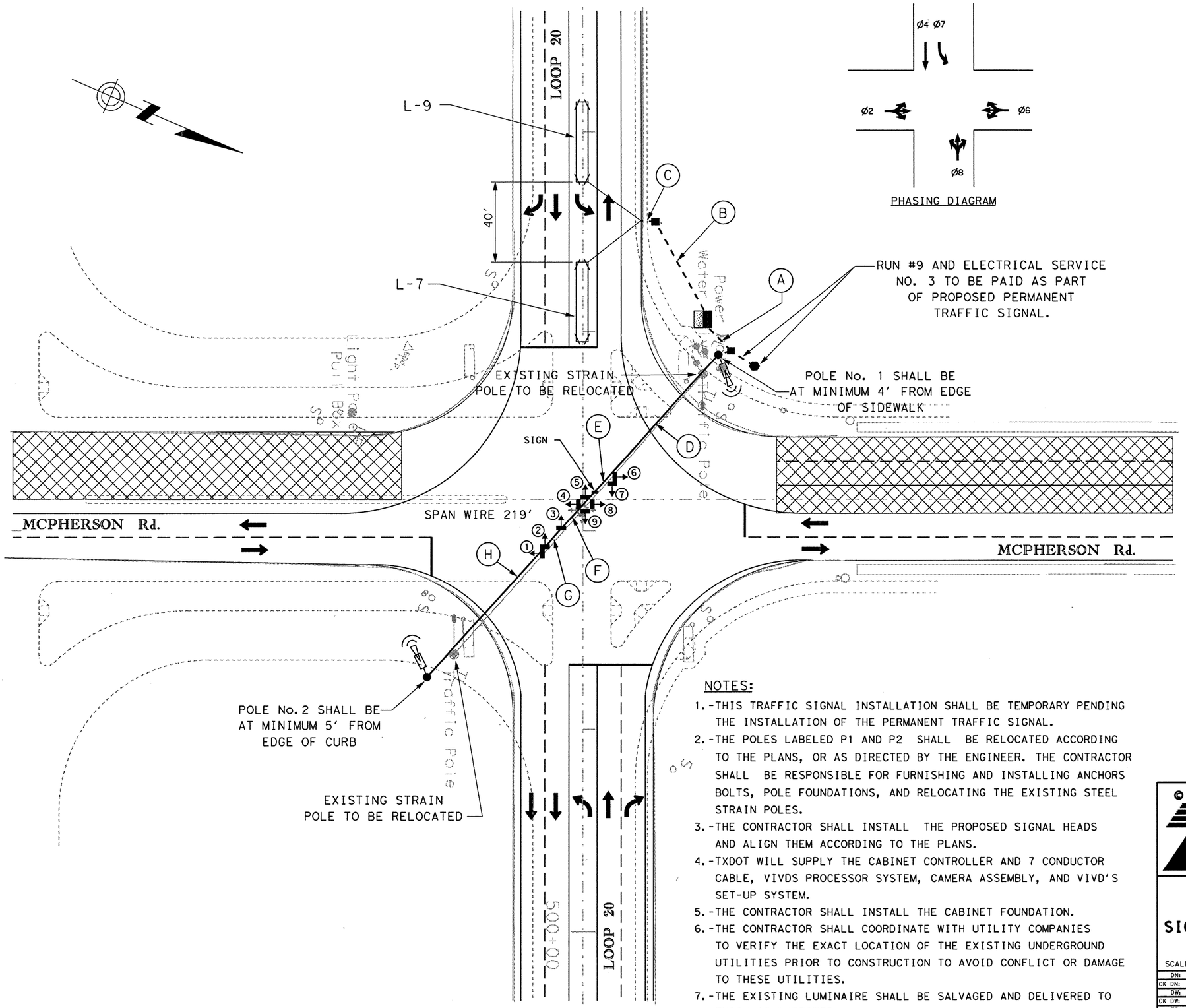

PHASING DIAGRAM

LEGEND

- TRAFFIC SIGNAL POLE
- SIGNAL HEAD
- ELECTRICAL SERVICE
- CONTROLLER CABINET
- GROUND BOX TY C
- (A) WIRE RUN DESIGNATION
- LOOP DETECTOR 6' X 40'
- CONDUIT
- VIVDS DETECTION
- DIRECTION OF TRAFFIC FLOW
- CLOSED ROAD
- FUTURE INTERSECTION
- EXISTING FLASHING BEACON
- EXISTING LUMINAIRE ARM

NOTES:

1. -THIS TRAFFIC SIGNAL INSTALLATION SHALL BE TEMPORARY PENDING THE INSTALLATION OF THE PERMANENT TRAFFIC SIGNAL.
2. -THE POLES LABELED P1 AND P2 SHALL BE RELOCATED ACCORDING TO THE PLANS, OR AS DIRECTED BY THE ENGINEER. THE CONTRACTOR SHALL BE RESPONSIBLE FOR FURNISHING AND INSTALLING ANCHORS BOLTS, POLE FOUNDATIONS, AND RELOCATING THE EXISTING STEEL STRAIN POLES.
3. -THE CONTRACTOR SHALL INSTALL THE PROPOSED SIGNAL HEADS AND ALIGN THEM ACCORDING TO THE PLANS.
4. -TXDOT WILL SUPPLY THE CABINET CONTROLLER AND 7 CONDUCTOR CABLE, VIVDS PROCESSOR SYSTEM, CAMERA ASSEMBLY, AND VIVD'S SET-UP SYSTEM.
5. -THE CONTRACTOR SHALL INSTALL THE CABINET FOUNDATION.
6. -THE CONTRACTOR SHALL COORDINATE WITH UTILITY COMPANIES TO VERIFY THE EXACT LOCATION OF THE EXISTING UNDERGROUND UTILITIES PRIOR TO CONSTRUCTION TO AVOID CONFLICT OR DAMAGE TO THESE UTILITIES.
7. -THE EXISTING LUMINAIRE SHALL BE SALVAGED AND DELIVERED TO TXDOT AS DIRECTED.

STATE OF TEXAS
DANNY MAGEE
83653
REGISTERED PROFESSIONAL ENGINEER

The seal appearing on this document was authorized by DANNY MAGEE P.E. 83653, on May 21, 2001.

© 2001

Texas Department of Transportation

PROPOSED TEMPORARY TRAFFIC SIGNAL AT LOOP 20 AND MCPHERSON Rd.

SCALE 1:50 — 0 10 20 40 60 80

DN: JNR	FED. RD. DIV. NO.	STATE	STATE PROJECT NO.			HIGHWAY NO.	
CK DN: BR	6	TEXAS	NH-99 (462)			LOOP 20	
DW: JNR	STATE DIST. NO.	COUNTY	CONTROL NO.	SECTION NO.	JOB NO.	SHEET NO.	
CK DW: GD	22	WEBB	0018	06	131, ETC	206A	
TR:							
CK TR:							

TRAFFIC REF : 2001/SCHEMATIC/MILO 1&2/TEI/
FILE NAME: TEMOP-MCPHER.DGN

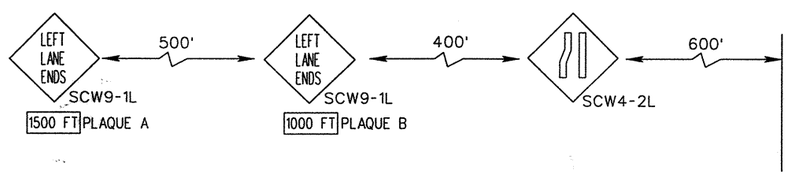

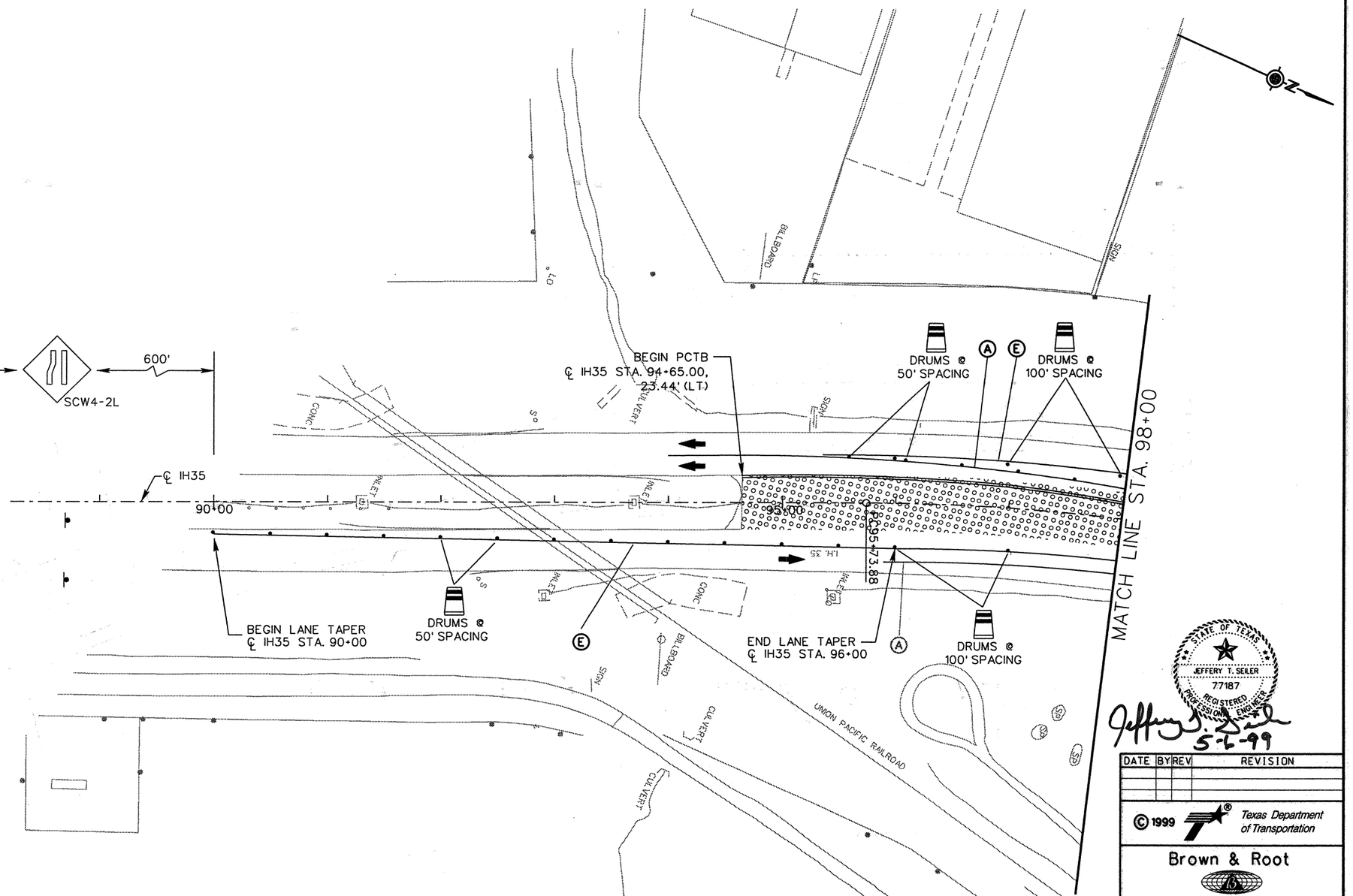

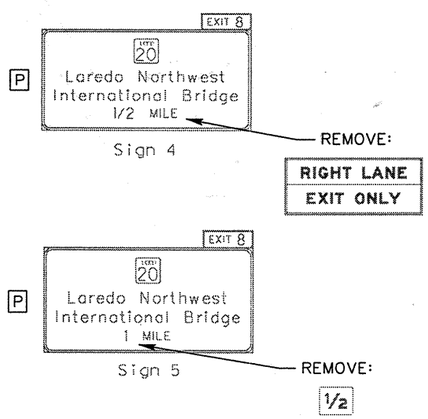

PAVEMENT MARKING LEGEND

(A)	0662	0501	WRK ZN	PAV MRK	REMOV	(W)	(4")	(SLD)
(B)	0662	0502	WRK ZN	PAV MRK	REMOV	(W)	(4")	(BRK)
(C)	0662	0507	WRK ZN	PAV MRK	REMOV	(W)	(8")	(SLD)
(D)	0662	0511	WRK ZN	PAV MRK	REMOV	(W)	(24")	(SLD)
(E)	0662	0523	WRK ZN	PAV MRK	REMOV	(Y)	(4")	(SLD)
(F)	0662	0525	WRK ZN	PAV MRK	REMOV	(Y)	(4")	(DOT)
(G)	0662	0532	WRK ZN	PAV MRK	REMOV	(Y)	(24")	(SLD)
(H)	0662	0549	WRK ZN	PAV MRK	NON-REMOV	(W)	(4")	(SLD)
(I)	0662	0553	WRK ZN	PAV MRK	NON-REMOV	(W)	(8")	(SLD)
(J)	0662	0557	WRK ZN	PAV MRK	NON-REMOV	(W)	(24")	(SLD)
(K)	0662	0569	WRK ZN	PAV MRK	NON-REMOV	(Y)	(4")	(SLD)

LEGEND

- PERMANENT CONSTRUCTION THIS PHASE
- PERMANENT CONSTRUCTION PREVIOUS PHASE
- TEMPORARY CONSTRUCTION THIS PHASE
- TEMPORARY CONSTRUCTION PREVIOUS PHASE
- PLASTIC DRUMS
- TRAFFIC LANES
- PCTB PORTABLE CONCRETE TRAFFIC BARRIER
- XXX SIGN PLACED IN PREVIOUS PHASE
- RIGHT OF WAY
- P PERMANENT SIGN

STATE OF TEXAS
JEFFERY T. SEILER
77187
REGISTERED PROFESSIONAL ENGINEER

5-6-99

DATE	BY	REV	REVISION

© 1999 Texas Department of Transportation

Brown & Root
HOUSTON, TEXAS

RHI
RODRIGUEZ & HUGGINS, INC.
CONSULTING ENGINEERS
11824 JOLLYVILLE ROAD SUITE 402
AUSTIN, TEXAS 78759
PHONE: 512 335 1754 FAX: 512 335 1799

IH 35
TRAFFIC CONTROL PLAN PHASE IV

0 25 50 100

SHEET 1 OF 9

FED RD DIV NO	STATE PROJECT NO		SHEET NO
6			207
STATE	STATE DIST NO		COUNTY
TEXAS	22		WEBB
CONT	SECT	JOB	HIGHWAY NO
0018	05	057	LOOP 20

80903\Mlo_interchange\maTC613.dgn

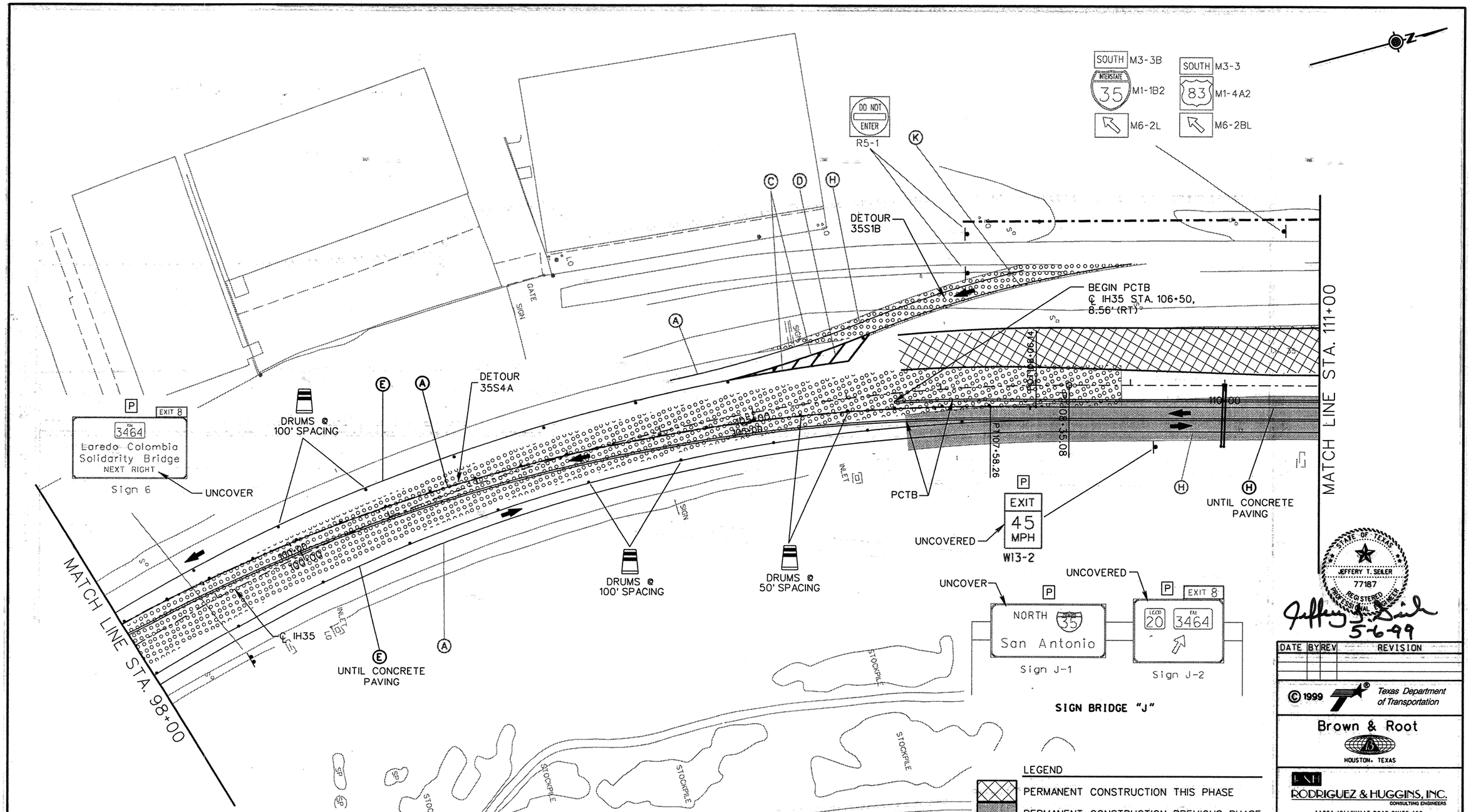

PAVEMENT MARKING LEGEND

A	0662	0501	WRK	ZN	PAV	MRK	REMOV	(W)	(4") (SLD)
B	0662	0502	WRK	ZN	PAV	MRK	REMOV	(W)	(4") (BRK)
C	0662	0507	WRK	ZN	PAV	MRK	REMOV	(W)	(8") (SLD)
D	0662	0511	WRK	ZN	PAV	MRK	REMOV	(W)	(24") (SLD)
E	0662	0523	WRK	ZN	PAV	MRK	REMOV	(Y)	(4") (SLD)
F	0662	0525	WRK	ZN	PAV	MRK	REMOV	(Y)	(4") (DOT)
G	0662	0532	WRK	ZN	PAV	MRK	REMOV	(Y)	(24") (SLD)
H	0662	0549	WRK	ZN	PAV	MRK	NON-REMOV	(W)	(4") (SLD)
I	0662	0553	WRK	ZN	PAV	MRK	NON-REMOV	(W)	(8") (SLD)
J	0662	0557	WRK	ZN	PAV	MRK	NON-REMOV	(W)	(24") (SLD)
K	0662	0569	WRK	ZN	PAV	MRK	NON-REMOV	(Y)	(4") (SLD)

LEGEND

- PERMANENT CONSTRUCTION THIS PHASE
- PERMANENT CONSTRUCTION PREVIOUS PHASE
- TEMPORARY CONSTRUCTION THIS PHASE
- TEMPORARY CONSTRUCTION PREVIOUS PHASE
- PLASTIC DRUMS
- TRAFFIC LANES
- PCTB PORTABLE CONCRETE TRAFFIC BARRIER
- XXX SIGN PLACED IN PREVIOUS PHASE
- RIGHT OF WAY
- P PERMANENT SIGN

STATE OF TEXAS
JEFFERY T. SEILER
77187
REGISTERED PROFESSIONAL ENGINEER

Jeffery T. Seiler
5-6-99

DATE	BY	REV	REVISION

© 1999 Texas Department of Transportation

Brown & Root
HOUSTON, TEXAS

RNH
RODRIGUEZ & HUGGINS, INC.
CONSULTING ENGINEERS
11824 JOLLYVILLE ROAD SUITE 402
AUSTIN, TEXAS 78759
PHONE: 512 335 1754 FAX: 512 335 1799

IH 35
TRAFFIC CONTROL PLAN
PHASE IV

0 25 50 100

SHEET 2 OF 9

FED RD DIV NO	STATE PROJECT NO		SHEET NO
6			208
STATE	STATE DIST NO		COUNTY
TEXAS	22		WEBB
CONT	SECT	JOB	HIGHWAY NO
0018	05	057	LOOP 20

80903\Mio Interchange\miTC614.dgn

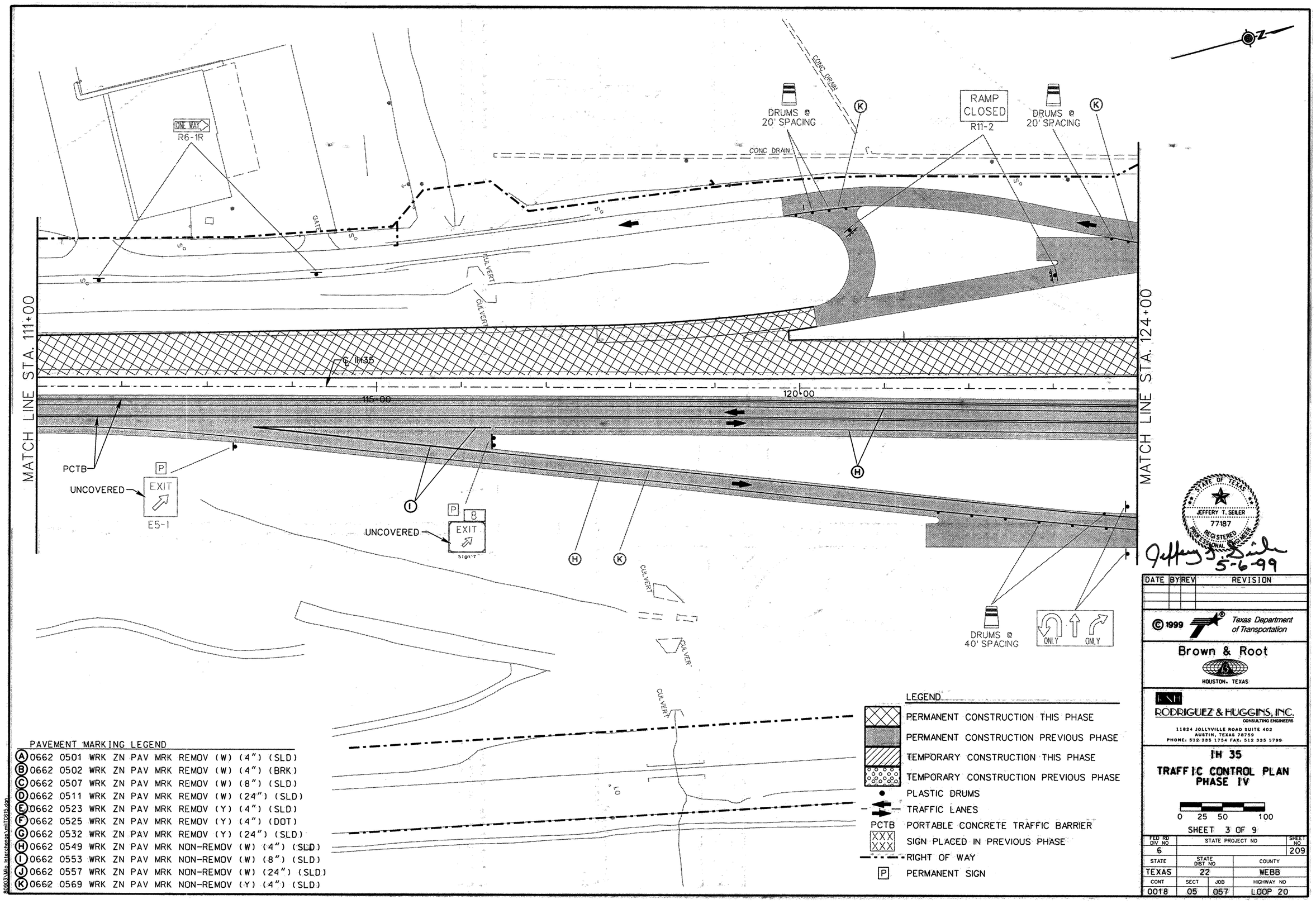
MATCH LINE STA. 111+00
MATCH LINE STA. 124+00
ONE WAY
R6-1R
DRUMS @ 20' SPACING
CONC DRAIN
RAMP CLOSED
R11-2
DRUMS @ 20' SPACING
CONC DRAIN
GATE
CULVERT
CULVERT
℄ IH35
115+00
120+00
PCTB
UNCOVERED
EXIT
E5-1
UNCOVERED
EXIT
Sign "7"
CULVERT
CULVERT
CULVERT
DRUMS @ 40' SPACING
ONLY
ONLY
LEGEND
PERMANENT CONSTRUCTION THIS PHASE
PERMANENT CONSTRUCTION PREVIOUS PHASE
TEMPORARY CONSTRUCTION THIS PHASE
TEMPORARY CONSTRUCTION PREVIOUS PHASE
PLASTIC DRUMS
TRAFFIC LANES
PCTB PORTABLE CONCRETE TRAFFIC BARRIER
SIGN PLACED IN PREVIOUS PHASE
RIGHT OF WAY
P PERMANENT SIGN
PAVEMENT MARKING LEGEND
A 0662 0501 WRK ZN PAV MRK REMOV (W) (4") (SLD)
B 0662 0502 WRK ZN PAV MRK REMOV (W) (4") (BRK)
C 0662 0507 WRK ZN PAV MRK REMOV (W) (8") (SLD)
D 0662 0511 WRK ZN PAV MRK REMOV (W) (24") (SLD)
E 0662 0523 WRK ZN PAV MRK REMOV (Y) (4") (SLD)
F 0662 0525 WRK ZN PAV MRK REMOV (Y) (4") (DOT)
G 0662 0532 WRK ZN PAV MRK REMOV (Y) (24") (SLD)
H 0662 0549 WRK ZN PAV MRK NON-REMOV (W) (4") (SLD)
I 0662 0553 WRK ZN PAV MRK NON-REMOV (W) (8") (SLD)
J 0662 0557 WRK ZN PAV MRK NON-REMOV (W) (24") (SLD)
K 0662 0569 WRK ZN PAV MRK NON-REMOV (Y) (4") (SLD)
STATE OF TEXAS
JEFFERY T. SEILER
77187
REGISTERED PROFESSIONAL ENGINEER
5-6-99
DATE BY REV REVISION
© 1999 Texas Department of Transportation
Brown & Root
HOUSTON, TEXAS
RODRIGUEZ & HUGGINS, INC.
CONSULTING ENGINEERS
11824 JOLLYVILLE ROAD SUITE 402
AUSTIN, TEXAS 78759
PHONE: 512-335 1754 FAX: 512 335 1799
IH 35
TRAFFIC CONTROL PLAN
PHASE IV
0 25 50 100
SHEET 3 OF 9
FED RD DIV NO 6
STATE PROJECT NO
SHEET NO 209
STATE TEXAS
STATE DIST NO 22
COUNTY WEBB
CONT 0018
SECT 05
JOB 057
HIGHWAY NO LOOP 20

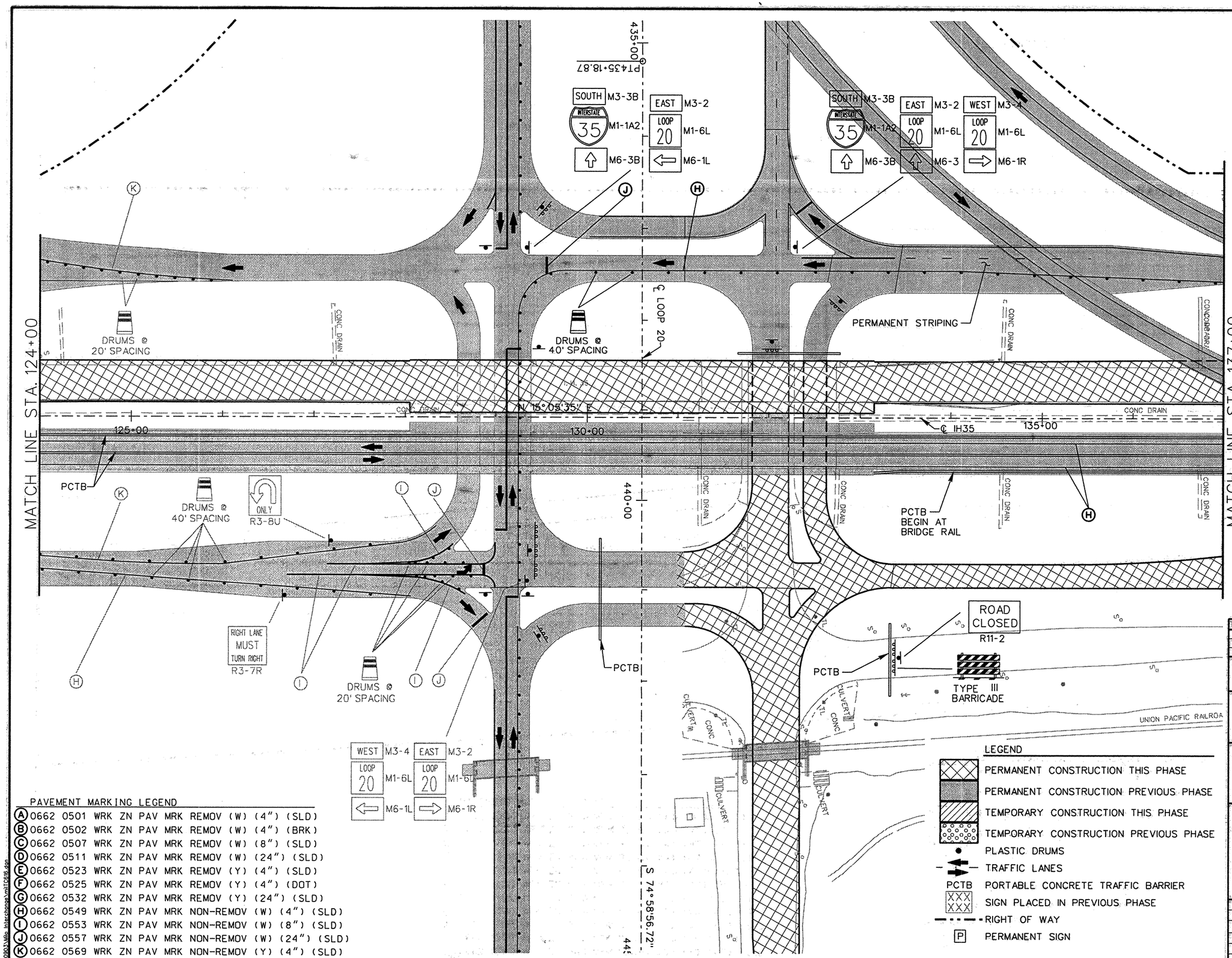

PAVEMENT MARKING LEGEND

- (A) 0662 0501 WRK ZN PAV MRK REMOV (W) (4") (SLD)
- (B) 0662 0502 WRK ZN PAV MRK REMOV (W) (4") (BRK)
- (C) 0662 0507 WRK ZN PAV MRK REMOV (W) (8") (SLD)
- (D) 0662 0511 WRK ZN PAV MRK REMOV (W) (24") (SLD)
- (E) 0662 0523 WRK ZN PAV MRK REMOV (Y) (4") (SLD)
- (F) 0662 0525 WRK ZN PAV MRK REMOV (Y) (4") (DOT)
- (G) 0662 0532 WRK ZN PAV MRK REMOV (Y) (24") (SLD)
- (H) 0662 0549 WRK ZN PAV MRK NON-REMOV (W) (4") (SLD)
- (I) 0662 0553 WRK ZN PAV MRK NON-REMOV (W) (8") (SLD)
- (J) 0662 0557 WRK ZN PAV MRK NON-REMOV (W) (24") (SLD)
- (K) 0662 0569 WRK ZN PAV MRK NON-REMOV (Y) (4") (SLD)

80903\Milo Interchange\mlTC616.dgn

STATE OF TEXAS
JEFFERY T. SEILER
77187
REGISTERED PROFESSIONAL ENGINEER

Jeffery T. Seiler 5-6-99

DATE	BY	REV	REVISION

© 1999 Texas Department of Transportation

Brown & Root
HOUSTON, TEXAS

RODRIGUEZ & HUGGINS, INC.
CONSULTING ENGINEERS
11824 JOLLYVILLE ROAD SUITE 402
AUSTIN, TEXAS 78759
PHONE: 512 335 1754 FAX: 512 335 1799

IH 35

TRAFFIC CONTROL PLAN
PHASE IV

0 25 50 100

SHEET 4 OF 9

FED RD DIV NO	STATE PROJECT NO		SHEET NO
6			210
STATE	STATE DIST NO		COUNTY
TEXAS	22		WEBB
CONT	SECT	JOB	HIGHWAY NO
0018	05	057	LOOP 20

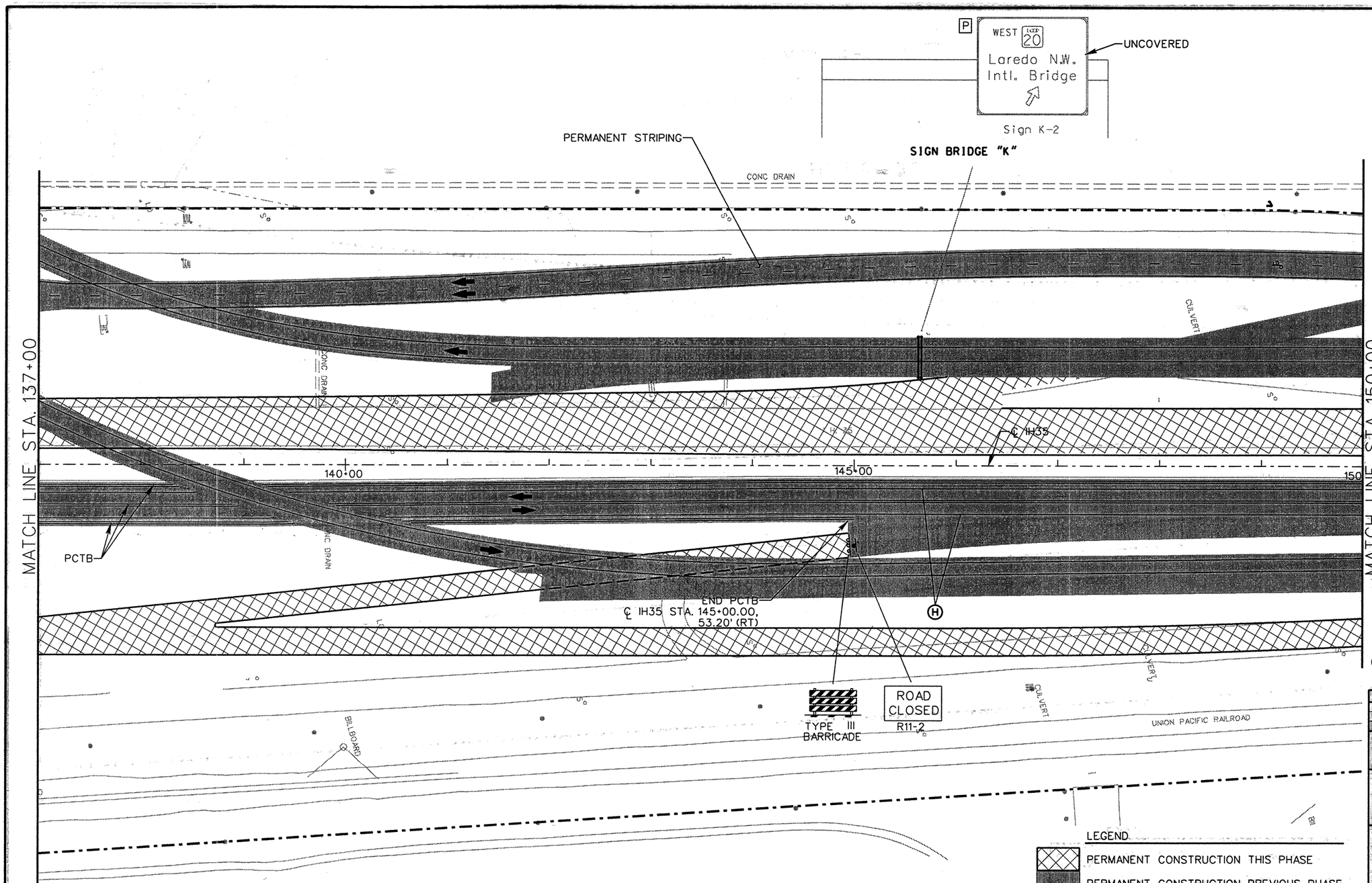

PAVEMENT MARKING LEGEND

(A) 0662 0501 WRK ZN PAV MRK REMOV (W) (4") (SLD)
(B) 0662 0502 WRK ZN PAV MRK REMOV (W) (4") (BRK)
(C) 0662 0507 WRK ZN PAV MRK REMOV (W) (8") (SLD)
(D) 0662 0511 WRK ZN PAV MRK REMOV (W) (24") (SLD)
(E) 0662 0523 WRK ZN PAV MRK REMOV (Y) (4") (SLD)
(F) 0662 0525 WRK ZN PAV MRK REMOV (Y) (4") (DOT)
(G) 0662 0532 WRK ZN PAV MRK REMOV (Y) (24") (SLD)
(H) 0662 0549 WRK ZN PAV MRK NON-REMOV (W) (4") (SLD)
(I) 0662 0553 WRK ZN PAV MRK NON-REMOV (W) (8") (SLD)
(J) 0662 0557 WRK ZN PAV MRK NON-REMOV (W) (24") (SLD)
(K) 0662 0569 WRK ZN PAV MRK NON-REMOV (Y) (4") (SLD)

LEGEND

- PERMANENT CONSTRUCTION THIS PHASE
- PERMANENT CONSTRUCTION PREVIOUS PHASE
- TEMPORARY CONSTRUCTION THIS PHASE
- TEMPORARY CONSTRUCTION PREVIOUS PHASE
- PLASTIC DRUMS
- TRAFFIC LANES
- PCTB PORTABLE CONCRETE TRAFFIC BARRIER
- SIGN PLACED IN PREVIOUS PHASE
- RIGHT OF WAY
- P PERMANENT SIGN

STATE OF TEXAS
JEFFERY T. SEILER
77187
REGISTERED PROFESSIONAL ENGINEER

Jeffery T. Seiler
5-12-99

DATE	BY	REV	REVISION

© 1999 Texas Department of Transportation

Brown & Root
HOUSTON, TEXAS

RODRIGUEZ & HUGGINS, INC.
CONSULTING ENGINEERS
11824 JOLLYVILLE ROAD SUITE 402
AUSTIN, TEXAS 78759
PHONE: 512 335 1754 FAX: 512 335 1799

IH 35
TRAFFIC CONTROL PLAN PHASE IV

0 25 50 100

SHEET 5 OF 9

FED RD DIV NO	STATE PROJECT NO		SHEET NO
6			211
STATE	STATE DIST NO		COUNTY
TEXAS	22		WEBB
CONT	SECT	JOB	HIGHWAY NO
0018	05	057	LOOP 20

80903\Mlo_interchange\mlTC617.dgn

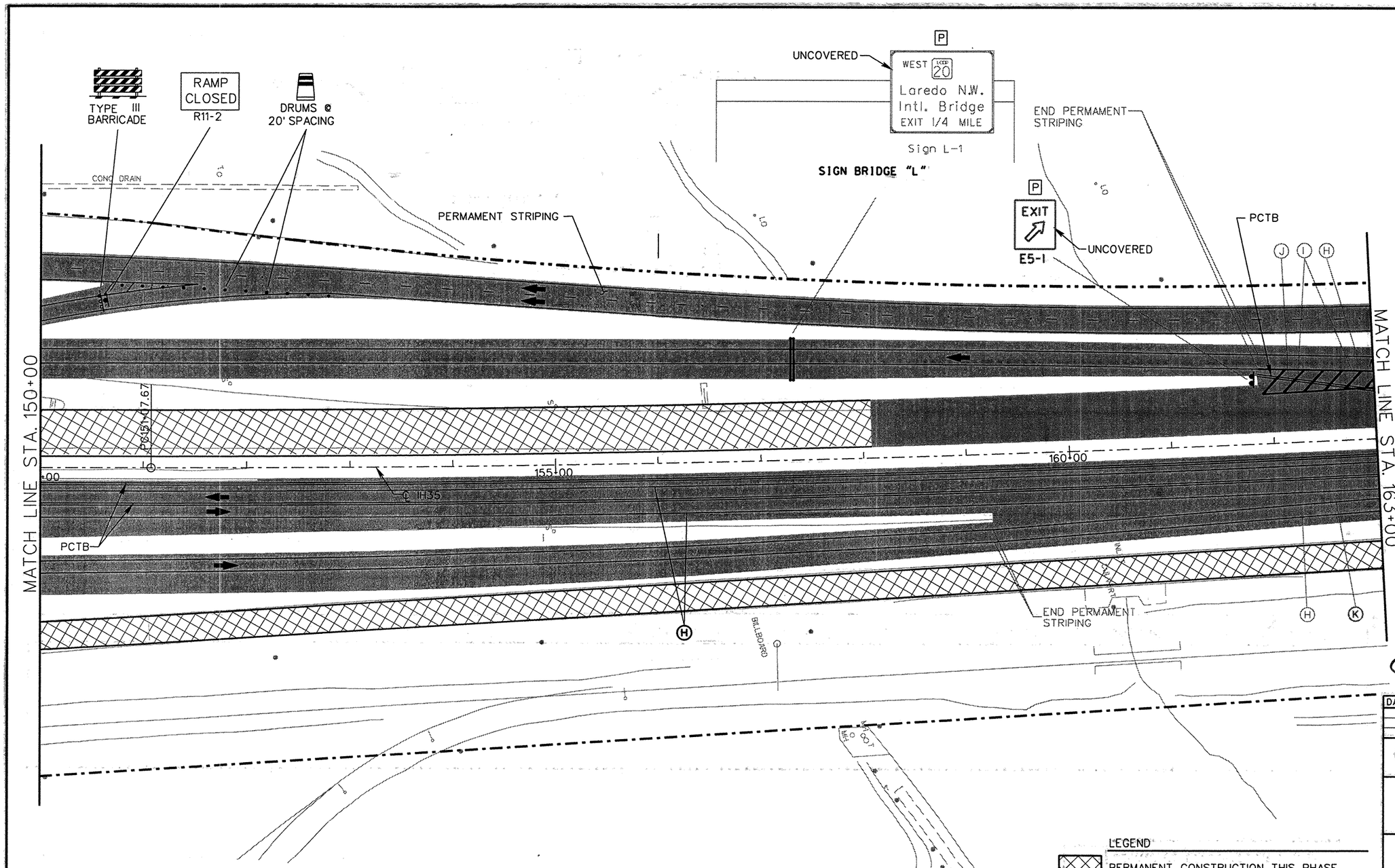

PAVEMENT MARKING LEGEND

(A) 0662 0501 WRK ZN PAV MRK REMOV (W) (4") (SLD)
(B) 0662 0502 WRK ZN PAV MRK REMOV (W) (4") (BRK)
(C) 0662 0507 WRK ZN PAV MRK REMOV (W) (8") (SLD)
(D) 0662 0511 WRK ZN PAV MRK REMOV (W) (24") (SLD)
(E) 0662 0523 WRK ZN PAV MRK REMOV (Y) (4") (SLD)
(F) 0662 0525 WRK ZN PAV MRK REMOV (Y) (4") (DOT)
(G) 0662 0532 WRK ZN PAV MRK REMOV (Y) (24") (SLD)
(H) 0662 0549 WRK ZN PAV MRK NON-REMOV (W) (4") (SLD)
(I) 0662 0553 WRK ZN PAV MRK NON-REMOV (W) (8") (SLD)
(J) 0662 0557 WRK ZN PAV MRK NON-REMOV (W) (24") (SLD)
(K) 0662 0569 WRK ZN PAV MRK NON-REMOV (Y) (4") (SLD)

NOTE: CONSTRUCT IH35 EAST FRONTAGE ROAD IN HALF-WIDTHS

LEGEND

- PERMANENT CONSTRUCTION THIS PHASE
- PERMANENT CONSTRUCTION PREVIOUS PHASE
- TEMPORARY CONSTRUCTION THIS PHASE
- TEMPORARY CONSTRUCTION PREVIOUS PHASE
- PLASTIC DRUMS
- TRAFFIC LANES
- PCTB — PORTABLE CONCRETE TRAFFIC BARRIER
- SIGN PLACED IN PREVIOUS PHASE
- RIGHT OF WAY
- P — PERMANENT SIGN

STATE OF TEXAS
JEFFERY T. SEILER
77187
REGISTERED PROFESSIONAL ENGINEER

Jeffery T. Seiler
5-12-99

DATE	BY	REV	REVISION

© 1999 Texas Department of Transportation

Brown & Root
HOUSTON, TEXAS

RODRIGUEZ & HUGGINS, INC.
CONSULTING ENGINEERS
11824 JOLLYVILLE ROAD SUITE 402
AUSTIN, TEXAS 78759
PHONE: 512 335 1754 FAX: 512 335 1799

IH 35
TRAFFIC CONTROL PLAN PHASE IV

0 25 50 100

SHEET 6 OF 9

FED RD DIV NO	STATE PROJECT NO		SHEET NO
6			212
STATE	STATE DIST NO		COUNTY
TEXAS	22		WEBB
CONT	SECT	JOB	HIGHWAY NO
0018	05	057	LOOP 20

80903\Mlo_Interchange\mitC618.dgn

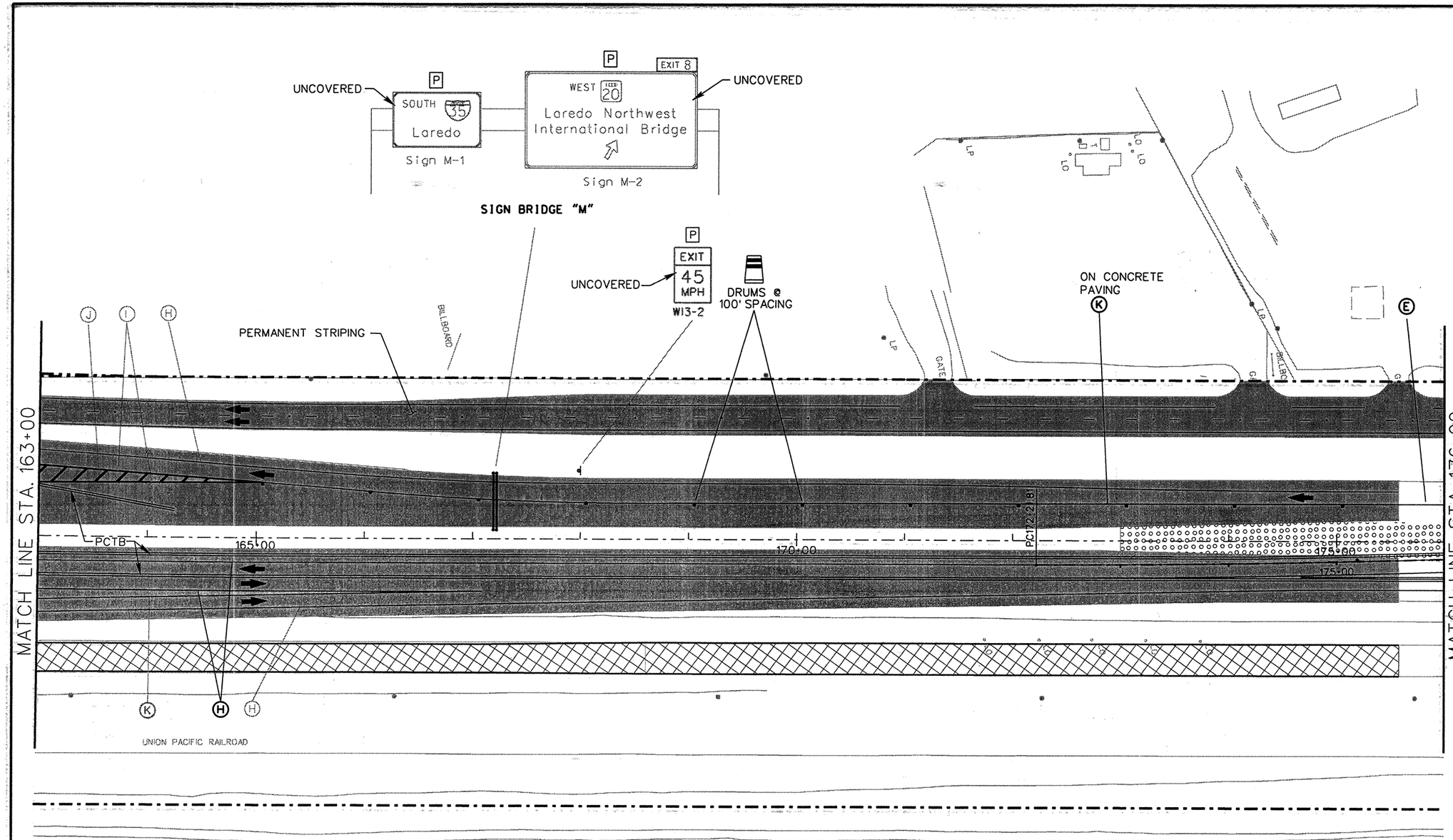

PAVEMENT MARKING LEGEND

A	0662 0501 WRK ZN PAV MRK REMOV (W) (4") (SLD)
B	0662 0502 WRK ZN PAV MRK REMOV (W) (4") (BRK)
C	0662 0507 WRK ZN PAV MRK REMOV (W) (8") (SLD)
D	0662 0511 WRK ZN PAV MRK REMOV (W) (24") (SLD)
E	0662 0523 WRK ZN PAV MRK REMOV (Y) (4") (SLD)
F	0662 0525 WRK ZN PAV MRK REMOV (Y) (4") (DOT)
G	0662 0532 WRK ZN PAV MRK REMOV (Y) (24") (SLD)
H	0662 0549 WRK ZN PAV MRK NON-REMOV (W) (4") (SLD)
I	0662 0553 WRK ZN PAV MRK NON-REMOV (W) (8") (SLD)
J	0662 0557 WRK ZN PAV MRK NON-REMOV (W) (24") (SLD)
K	0662 0569 WRK ZN PAV MRK NON-REMOV (Y) (4") (SLD)

NOTE: CONSTRUCT IH35 EAST FRONTAGE ROAD IN HALF-WIDTHS

LEGEND

- PERMANENT CONSTRUCTION THIS PHASE
- PERMANENT CONSTRUCTION PREVIOUS PHASE
- TEMPORARY CONSTRUCTION THIS PHASE
- TEMPORARY CONSTRUCTION PREVIOUS PHASE
- PLASTIC DRUMS
- TRAFFIC LANES
- PCTB PORTABLE CONCRETE TRAFFIC BARRIER
- XXX SIGN PLACED IN PREVIOUS PHASE
- RIGHT OF WAY
- P PERMANENT SIGN

STATE OF TEXAS
JEFFERY T. SEILER
77187
REGISTERED PROFESSIONAL ENGINEER

Jeffery T. Seiler
5-12-99

DATE	BY	REV	REVISION

© 1999 Texas Department of Transportation

Brown & Root
HOUSTON, TEXAS

RODRIGUEZ & HUGGINS, INC.
CONSULTING ENGINEERS
11824 JOLLYVILLE ROAD SUITE 402
AUSTIN, TEXAS 78759
PHONE: 512 335 1754 FAX: 512 335 1799

IH 35
TRAFFIC CONTROL PLAN
PHASE IV

0 25 50 100

SHEET 7 OF 9

FED RD DIV NO	STATE PROJECT NO		SHEET NO
6			213
STATE	STATE DIST NO		COUNTY
TEXAS	22		WEBB
CONT	SECT	JOB	HIGHWAY NO
0018	05	057	LOOP 20

80903\Milo Interchange\milTC619.dgn

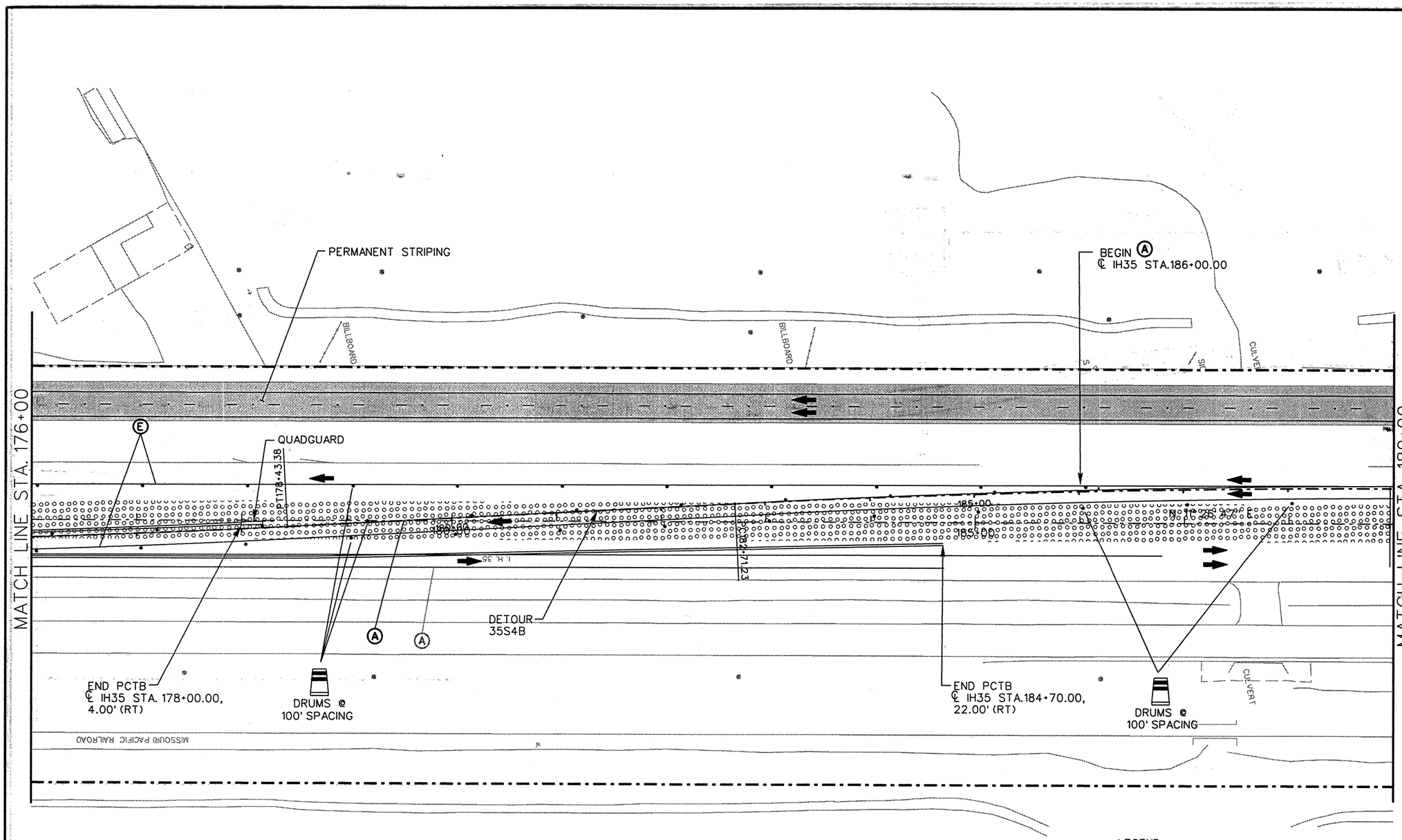

PAVEMENT MARKING LEGEND

(A) 0662 0501 WRK ZN PAV MRK REMOV (W) (4") (SLD)
(B) 0662 0502 WRK ZN PAV MRK REMOV (W) (4") (BRK)
(C) 0662 0507 WRK ZN PAV MRK REMOV (W) (8") (SLD)
(D) 0662 0511 WRK ZN PAV MRK REMOV (W) (24") (SLD)
(E) 0662 0523 WRK ZN PAV MRK REMOV (Y) (4") (SLD)
(F) 0662 0525 WRK ZN PAV MRK REMOV (Y) (4") (DOT)
(G) 0662 0532 WRK ZN PAV MRK REMOV (Y) (24") (SLD)
(H) 0662 0549 WRK ZN PAV MRK NON-REMOV (W) (4") (SLD)
(I) 0662 0553 WRK ZN PAV MRK NON-REMOV (W) (8") (SLD)
(J) 0662 0557 WRK ZN PAV MRK NON-REMOV (W) (24") (SLD)
(K) 0662 0569 WRK ZN PAV MRK NON-REMOV (Y) (4") (SLD)

LEGEND

- PERMANENT CONSTRUCTION THIS PHASE
- PERMANENT CONSTRUCTION PREVIOUS PHASE
- TEMPORARY CONSTRUCTION THIS PHASE
- TEMPORARY CONSTRUCTION PREVIOUS PHASE
- PLASTIC DRUMS
- TRAFFIC LANES
- PCTB PORTABLE CONCRETE TRAFFIC BARRIER
- XXX SIGN PLACED IN PREVIOUS PHASE
- RIGHT OF WAY
- P PERMANENT SIGN

STATE OF TEXAS
JEFFERY T. SEILER
77187
REGISTERED PROFESSIONAL ENGINEER

Jeffery T. Seiler
5-6-99

DATE	BY	REV	REVISION

© 1999 Texas Department of Transportation

Brown & Root
HOUSTON, TEXAS

RODRIGUEZ & HUGGINS, INC.
CONSULTING ENGINEERS
11824 JOLLYVILLE ROAD SUITE 402
AUSTIN, TEXAS 78759
PHONE: 512 335 1754 FAX: 512 335 1799

IH 35

TRAFFIC CONTROL PLAN
PHASE IV

0 25 50 100

SHEET 8 OF 9

FED RD DIV NO	STATE PROJECT NO		SHEET NO
6			214
STATE	STATE DIST NO		COUNTY
TEXAS	22		WEBB
CONT	SECT	JOB	HIGHWAY NO
0018	05	057	LOOP 20

80903\Milo Interchange\mlTC620.dgn

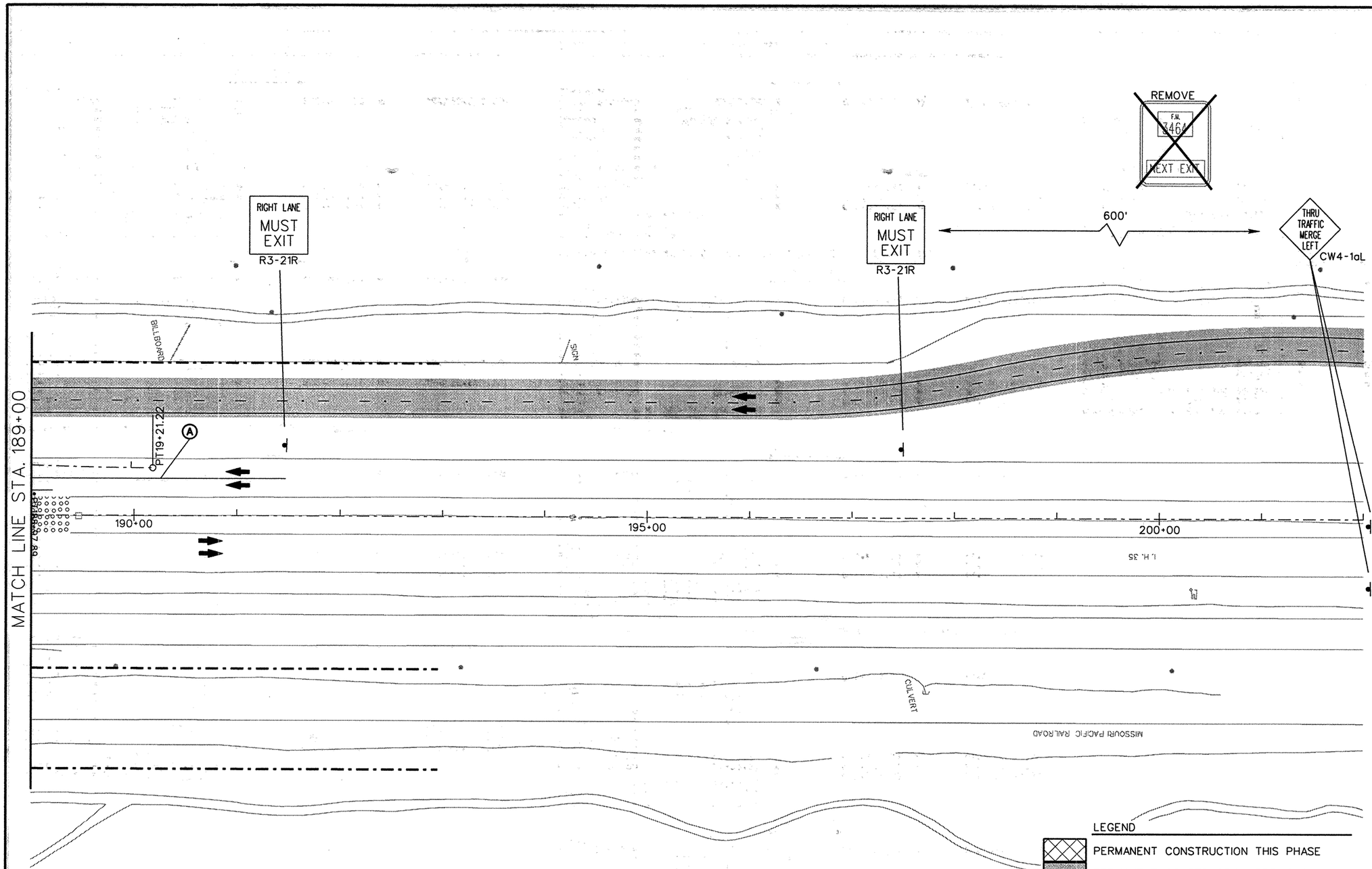

PAVEMENT MARKING LEGEND

(A) 0662 0501 WRK ZN PAV MRK REMOV (W) (4") (SLD)
(B) 0662 0502 WRK ZN PAV MRK REMOV (W) (4") (BRK)
(C) 0662 0507 WRK ZN PAV MRK REMOV (W) (8") (SLD)
(D) 0662 0511 WRK ZN PAV MRK REMOV (W) (24") (SLD)
(E) 0662 0523 WRK ZN PAV MRK REMOV (Y) (4") (SLD)
(F) 0662 0525 WRK ZN PAV MRK REMOV (Y) (4") (DOT)
(G) 0662 0532 WRK ZN PAV MRK REMOV (Y) (24") (SLD)
(H) 0662 0549 WRK ZN PAV MRK NON-REMOV (W) (4") (SLD)
(I) 0662 0553 WRK ZN PAV MRK NON-REMOV (W) (8") (SLD)
(J) 0662 0557 WRK ZN PAV MRK NON-REMOV (W) (24") (SLD)
(K) 0662 0569 WRK ZN PAV MRK NON-REMOV (Y) (4") (SLD)

ROAD CLOSED
R11-2

TYPE III BARRICADE

NOTE: PLACE TY III BARRICADES AND "ROAD CLOSED" SIGN ON THE SOUTH SIDE OF THE NEAREST INTERSECTION TO THE NORTH IN THE SOUTHBOUND LANES OF THE IH35 EAST FRONTAGE ROAD.

LEGEND

- PERMANENT CONSTRUCTION THIS PHASE
- PERMANENT CONSTRUCTION PREVIOUS PHASE
- TEMPORARY CONSTRUCTION THIS PHASE
- TEMPORARY CONSTRUCTION PREVIOUS PHASE
- PLASTIC DRUMS
- TRAFFIC LANES
- PCTB — PORTABLE CONCRETE TRAFFIC BARRIER
- XXX XXX — SIGN PLACED IN PREVIOUS PHASE
- RIGHT OF WAY
- P — PERMANENT SIGN

STATE OF TEXAS
JEFFERY T. SEILER
77187
REGISTERED PROFESSIONAL ENGINEER

5-6-99

DATE	BY	REV	REVISION

© 1999 Texas Department of Transportation

Brown & Root
HOUSTON, TEXAS

RODRIGUEZ & HUGGINS, INC.
CONSULTING ENGINEERS
11824 JOLLYVILLE ROAD SUITE 402
AUSTIN, TEXAS 78759
PHONE: 512 335 1754 FAX: 512 335 1799

IH 35
TRAFFIC CONTROL PLAN PHASE IV

0 25 50 100

SHEET 9 OF 9

FED RD DIV NO	STATE PROJECT NO		SHEET NO
6			215
STATE	STATE DIST NO	COUNTY	
TEXAS	22	WEBB	
CONT	SECT	JOB	HIGHWAY NO
0018	05	057	LOOP 20

80903\Wlo_Interchange\mITC821.dgn

DETOUR ALIGNMENTS

DETOUR UNI1 HORIZONTAL ALIGNMENT DESCRIPTION

Curve Data

```
Curve-1
P.I.  Station          16+83.00  X        672,602.66  Y      17,139,272.29
Delta        =     22° 04' 09.33" (LT)
Degree       =     28° 38' 52.40"
Tangent      =            39.00
Length       =            77.04
Radius       =           200.00
External     =             3.77
Long Chord   =            76.56
Mid. Ord.    =             3.70
P.C.  Station          16+43.99  X        672,578.65  Y      17,139,241.56
P.T.  Station          17+21.03  X        672,613.36  Y      17,139,309.80
C.C.                             X        672,421.04  Y      17,139,364.67
Back        = N  37° 59' 33.73" E
Ahead       = N  15° 55' 24.41" E
Chord Bear  = N  26° 57' 29.07" E
```

Curve Data

```
Curve-2
P.I.  Station          17+62.18  X        672,624.65  Y      17,139,349.37
Delta        =     22° 04' 09.05" (RT)
Degree       =     27° 09' 15.83"
Tangent      =            41.15
Length       =            81.27
Radius       =           211.00
External     =             3.97
Long Chord   =            80.77
Mid. Ord.    =             3.90
P.C.  Station          17+21.03  X        672,613.36  Y      17,139,309.80
P.T.  Station          18+02.30  X        672,649.98  Y      17,139,381.79
C.C.                             X        672,816.27  Y      17,139,251.91
Back        = N  15° 55' 24.41" E
Ahead       = N  37° 59' 33.46" E
Chord Bear  = N  26° 57' 28.93" E
```

Course from PT-2 to PC-3 N 37° 59' 33.46" E Dist 502.44

Curve Data

```
Curve-3
P.I.  Station          23+46.21  X        672,984.78  Y      17,139,810.44
Delta        =     22° 13' 56.34" (RT)
Degree       =     27° 09' 15.83"
Tangent      =            41.46
Length       =            81.87
Radius       =           211.00
External     =             4.03
Long Chord   =            81.36
Mid. Ord.    =             3.96
P.C.  Station          23+04.75  X        672,959.26  Y      17,139,777.77
P.T.  Station          23+86.62  X        673,020.77  Y      17,139,831.03
C.C.                             X        673,125.55  Y      17,139,647.88
Back        = N  37° 59' 33.46" E
Ahead       = N  60° 13' 29.79" E
Chord Bear  = N  49° 06' 31.63" E
```

Curve Data

```
Curve-4
P.I.  Station          24+25.78  X        673,054.75  Y      17,139,850.47
Delta        =     22° 09' 14.34" (LT)
Degree       =     28° 38' 52.40"
Tangent      =            39.16
Length       =            77.33
Radius       =           200.00
External     =             3.80
Long Chord   =            76.85
Mid. Ord.    =             3.73
P.C.  Station          23+86.62  X        673,020.77  Y      17,139,831.03
P.T.  Station          24+63.95  X        673,078.90  Y      17,139,881.30
C.C.                             X        672,921.45  Y      17,140,004.62
Back        = N  60° 13' 29.79" E
Ahead       = N  38° 04' 15.45" E
Chord Bear  = N  49° 08' 52.62" E
```

DETOUR UNI2 HORIZONTAL ALIGNMENT DESCRIPTION

Curve Data

```
Curve-1
P.I.  Station          20+51.74  X        672,473.86  Y      17,139,798.78
Delta        =     87° 54' 36.39" (RT)
Degree       =     76° 23' 39.74"
Tangent      =            72.31
Length       =           115.07
Radius       =            75.00
External     =            29.18
Long Chord   =           104.11
Mid. Ord.    =            21.01
P.C.  Station          19+79.42  X        672,530.85  Y      17,139,754.27
P.T.  Station          20+94.50  X        672,516.26  Y      17,139,857.36
C.C.                             X        672,577.01  Y      17,139,813.38
Back        = N  52° 00' 27.07" W
Ahead       = N  35° 54' 09.32" E
Chord Bear  = N   8° 03' 08.88" W
```

Course from PT-1 to PC-2 N 35° 54' 10.42" E Dist 103.40

Curve Data

```
Curve-2
P.I.  Station          22+22.42  X        672,591.17  Y      17,139,961.05
Delta        =     13° 11' 41.68" (LT)
Degree       =     27° 01' 34.72"
Tangent      =            24.52
Length       =            48.82
Radius       =           212.00
External     =             1.41
Long Chord   =            48.71
Mid. Ord.    =             1.40
P.C.  Station          21+97.90  X        672,576.90  Y      17,139,941.11
P.T.  Station          22+46.72  X        672,600.51  Y      17,139,983.73
C.C.                             X        672,404.49  Y      17,140,064.48
Back        = N  35° 35' 07.84" E
Ahead       = N  22° 23' 26.16" E
Chord Bear  = N  28° 59' 17.00" E
```

Curve Data

```
Curve-3
P.I.  Station          22+74.12  X        672,610.94  Y      17,140,009.06
Delta        =     15° 36' 07.97" (RT)
Degree       =     28° 38' 52.42"
Tangent      =            27.40
Length       =            54.46
Radius       =           200.00
External     =             1.87
Long Chord   =            54.29
Mid. Ord.    =             1.85
P.C.  Station          22+46.72  X        672,600.51  Y      17,139,983.73
P.T.  Station          23+01.18  X        672,627.81  Y      17,140,030.65
C.C.                             X        672,785.43  Y      17,139,907.54
Back        = N  22° 23' 26.16" E
Ahead       = N  37° 59' 34.13" E
Chord Bear  = N  30° 11' 30.15" E
```

Curve Data

```
Curve-3
P.I.  Station          22+22.39  X        672,552.02  Y      17,139,990.96
Delta        =     13° 42' 59.64" (RT)
Degree       =     28° 38' 52.40"
Tangent      =            24.05
Length       =            47.88
Radius       =           200.00
External     =             1.44
Long Chord   =            47.77
Mid. Ord.    =             1.43
P.C.  Station          21+98.34  X        672,536.61  Y      17,139,972.49
P.T.  Station          22+46.22  X        672,571.38  Y      17,140,005.24
C.C.                             X        672,690.13  Y      17,139,844.31
Back        = N  39° 51' 38.59" E
Ahead       = N  53° 34' 38.23" E
Chord Bear  = N  46° 43' 08.41" E
```

Curve Data

```
Curve-4
P.I.  Station          22+73.45  X        672,593.29  Y      17,140,021.41
Delta        =     15° 30' 23.91" (LT)
Degree       =     28° 38' 52.40"
Tangent      =            27.23
Length       =            54.13
Radius       =           200.00
External     =             1.85
Long Chord   =            53.96
Mid. Ord.    =             1.83
P.C.  Station          22+46.22  X        672,571.38  Y      17,140,005.24
P.T.  Station          23+00.35  X        672,610.08  Y      17,140,042.84
C.C.                             X        672,452.63  Y      17,140,166.17
Back        = N  53° 34' 38.23" E
Ahead       = N  38° 04' 14.32" E
Chord Bear  = N  45° 49' 26.27" E
```

DETOUR UNI3 HORIZONTAL ALIGNMENT DESCRIPTION

Curve Data

```
Curve-1
P.I.  Station          17+26.19  X        672,259.47  Y      17,139,591.78
Delta        =     15° 35' 55.59" (LT)
Degree       =     28° 38' 52.40"
Tangent      =            27.39
Length       =            54.45
Radius       =           200.00
External     =             1.87
Long Chord   =            54.28
Mid. Ord.    =             1.85
P.C.  Station          16+98.80  X        672,242.61  Y      17,139,570.19
P.T.  Station          17+53.25  X        672,269.91  Y      17,139,617.11
C.C.                             X        672,084.99  Y      17,139,693.31
Back        = N  37° 59' 33.12" E
Ahead       = N  22° 23' 37.53" E
Chord Bear  = N  30° 11' 35.33" E
```

Curve Data

```
Curve-2
P.I.  Station          17+77.76  X        672,279.24  Y      17,139,639.77
Delta        =     13° 11' 12.88" (RT)
Degree       =     27° 01' 30.46"
Tangent      =            24.51
Length       =            48.79
Radius       =           212.01
External     =             1.41
Long Chord   =            48.69
Mid. Ord.    =             1.40
P.C.  Station          17+53.25  X        672,269.91  Y      17,139,617.11
P.T.  Station          18+02.04  X        672,293.50  Y      17,139,659.70
C.C.                             X        672,465.93  Y      17,139,536.34
Back        = N  22° 23' 37.53" E
Ahead       = N  35° 34' 50.41" E
Chord Bear  = N  28° 59' 13.97" E
```

Course from PT to 551 N 35° 34' 50.41" E Dist 100.39

Point 551 X 672,351.92 Y 17,139,741.35 Sta 19+02.44

Course from PI to 552 N 37° 59' 32.40" E Dist 195.57

Point 552 X 672,472.30 Y 17,139,895.48 Sta 20+98.01

Course from 552 to PC N 39° 51' 38.59" E Dist 100.33

STATE OF TEXAS
JEFFERY T. SEILER
77187
REGISTERED PROFESSIONAL ENGINEER

5-6-99

DATE	BY	REV	REVISION

© 1999 Texas Department of Transportation

Brown & Root
HOUSTON, TEXAS

RODRIGUEZ & HUGGINS, INC.
CONSULTING ENGINEERS
11824 JOLLYVILLE ROAD SUITE 402
AUSTIN, TEXAS 78759
PHONE: 512 335 1754 FAX: 512 335 1799

IH35 @ UNIROYAL ROAD

TRAFFIC CONTROL PLAN
DETOUR HORIZONTAL
ALIGNMENT DATA

SHEET 1 OF 1

FED RD DIV NO	STATE PROJECT NO		SHEET NO
6			216
STATE	STATE DIST NO		COUNTY
TEXAS	22		WEBB
CONT	SECT	JOB	HIGHWAY NO
0018	05	057	LOOP 20

P:\80903\vmlb interchange\dir\uni1A

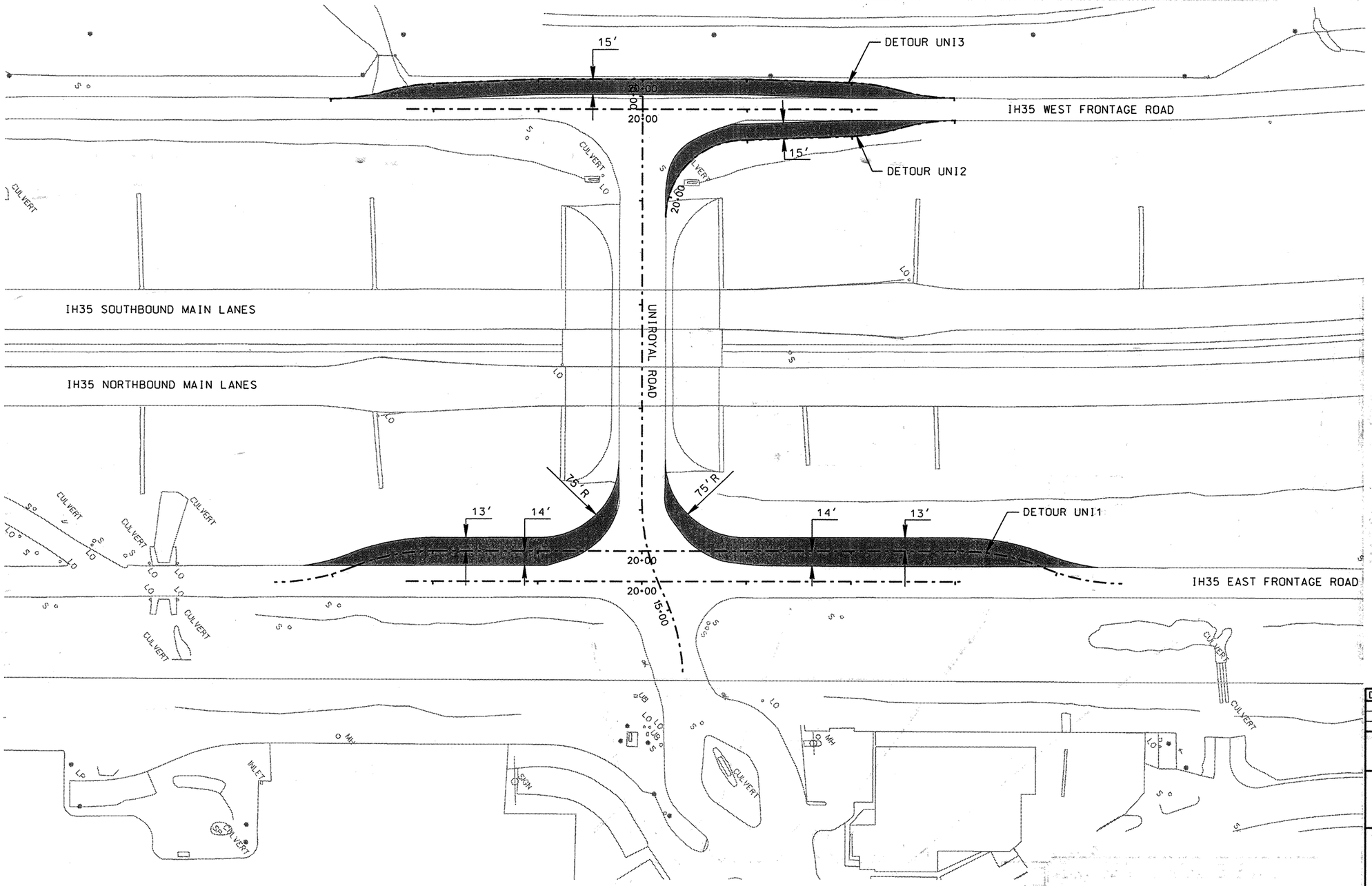

NOTE: SEE HORIZONTAL ALIGNMENT DATA SHEET FOR ALIGNMENT DETAILS

STATE OF TEXAS
JEFFERY T. SEILER
77187
REGISTERED PROFESSIONAL ENGINEER

Jeffery T. Seiler
5-6-99

DATE	BY	REV	REVISION

© 1999 Texas Department of Transportation

Brown & Root
HOUSTON, TEXAS

RODRIGUEZ & HUGGINS, INC.
CONSULTING ENGINEERS
11824 JOLLYVILLE ROAD SUITE 402
AUSTIN, TEXAS 78759
PHONE: 512 335 1754 FAX: 512 335 1799

IH35 @ UNIROYAL ROAD
TRAFFIC CONTROL PLAN DETOUR DETAILS

0 25 50 100

SHEET 1 OF 1

FED RD DIV NO	STATE PROJECT NO		SHEET NO
6			217
STATE	STATE DIST NO		COUNTY
TEXAS	22		WEBB
CONT	SECT	JOB	HIGHWAY NO
0018	05	057	LOOP 20

p:\80903\Mlo. Interchange\div\Uniroyal\uniide1.dgn

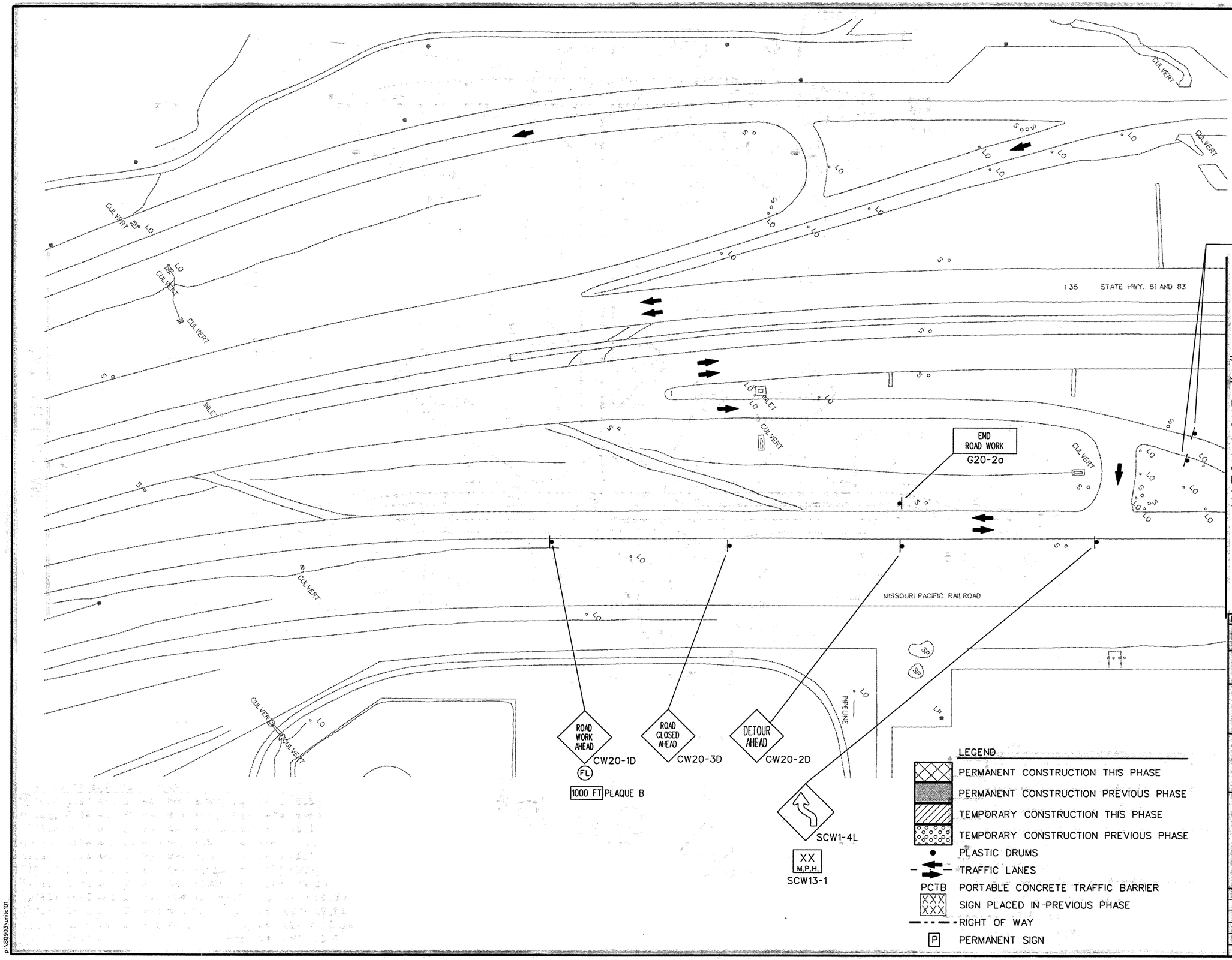

STATE OF TEXAS
JEFFERY T. SEILER
77187
REGISTERED
PROFESSIONAL ENGINEER

Jeffery T. Seiler
5-6-99

DATE	BY	REV	REVISION

© 1999 Texas Department of Transportation

Brown & Root
HOUSTON, TEXAS

RNH
RODRIGUEZ & HUGGINS, INC.
CONSULTING ENGINEERS
11824 JOLLYVILLE ROAD SUITE 402
AUSTIN, TEXAS 78759
PHONE: 512 338 1754 FAX: 512 335 1799

IH35 & UNIROYAL ROAD
TRAFFIC CONTROL PLAN
PHASE I

0 25 50 100

SHEET 1 OF 3

FED RD DIV NO	STATE PROJECT NO		SHEET NO
6			218
STATE	STATE DIST NO	COUNTY	
TEXAS	22	WEBB	
CONT	SECT	JOB	HIGHWAY NO
0018	05	057	LOOP 20

p:\80903\unitc101

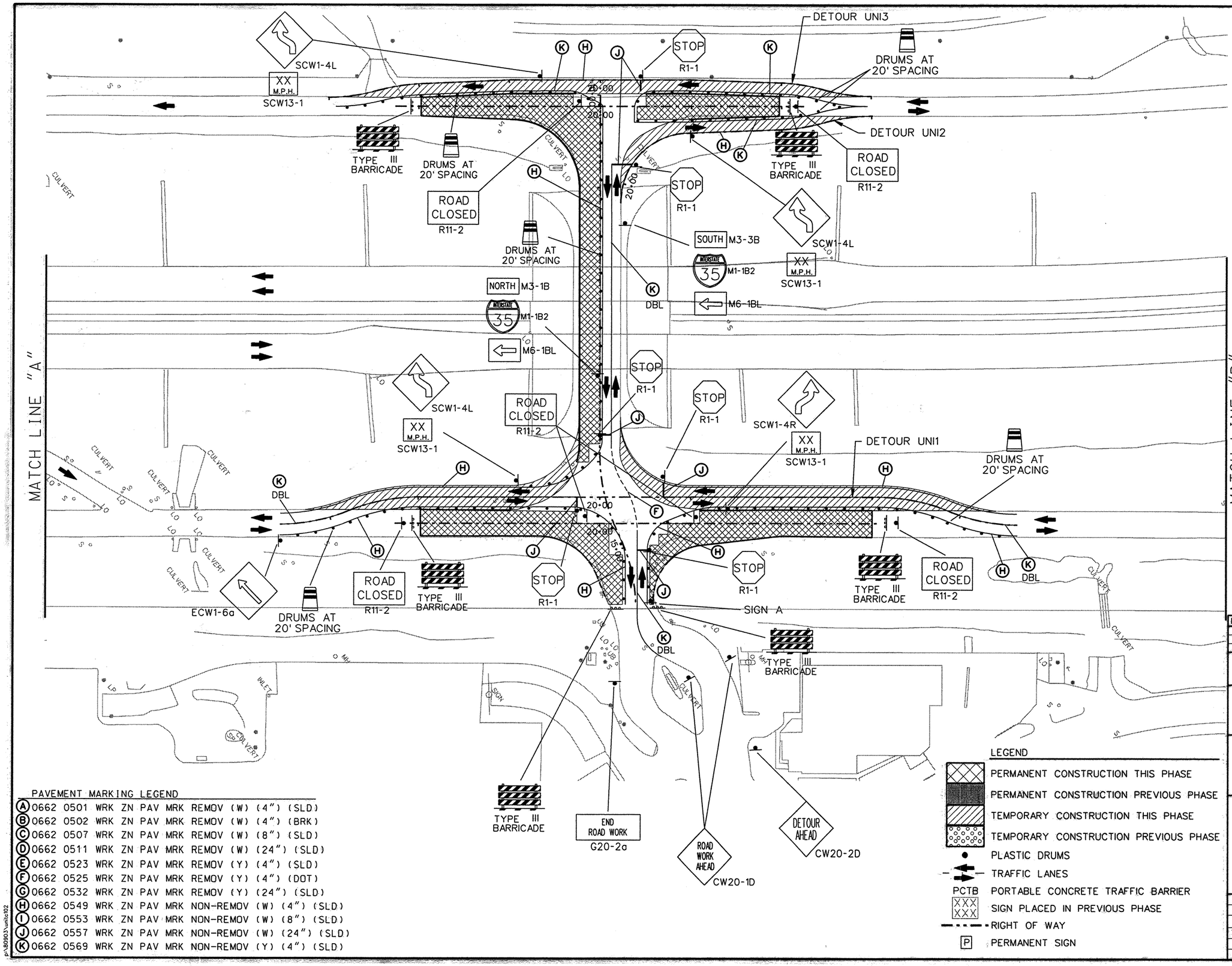

PAVEMENT MARKING LEGEND

(A)	0662	0501	WRK ZN PAV MRK REMOV	(W)	(4")	(SLD)
(B)	0662	0502	WRK ZN PAV MRK REMOV	(W)	(4")	(BRK)
(C)	0662	0507	WRK ZN PAV MRK REMOV	(W)	(8")	(SLD)
(D)	0662	0511	WRK ZN PAV MRK REMOV	(W)	(24")	(SLD)
(E)	0662	0523	WRK ZN PAV MRK REMOV	(Y)	(4")	(SLD)
(F)	0662	0525	WRK ZN PAV MRK REMOV	(Y)	(4")	(DOT)
(G)	0662	0532	WRK ZN PAV MRK REMOV	(Y)	(24")	(SLD)
(H)	0662	0549	WRK ZN PAV MRK NON-REMOV	(W)	(4")	(SLD)
(I)	0662	0553	WRK ZN PAV MRK NON-REMOV	(W)	(8")	(SLD)
(J)	0662	0557	WRK ZN PAV MRK NON-REMOV	(W)	(24")	(SLD)
(K)	0662	0569	WRK ZN PAV MRK NON-REMOV	(Y)	(4")	(SLD)

LEGEND

- PERMANENT CONSTRUCTION THIS PHASE
- PERMANENT CONSTRUCTION PREVIOUS PHASE
- TEMPORARY CONSTRUCTION THIS PHASE
- TEMPORARY CONSTRUCTION PREVIOUS PHASE
- PLASTIC DRUMS
- TRAFFIC LANES
- PCTB — PORTABLE CONCRETE TRAFFIC BARRIER
- SIGN PLACED IN PREVIOUS PHASE
- RIGHT OF WAY
- P — PERMANENT SIGN

STATE OF TEXAS
JEFFERY T. SEILER
77187
REGISTERED PROFESSIONAL ENGINEER

5-12-99

DATE	BY	REV	REVISION

© 1999 Texas Department of Transportation

Brown & Root
HOUSTON, TEXAS

RODRIGUEZ & HUGGINS, INC.
CONSULTING ENGINEERS
11824 JOLLYVILLE ROAD SUITE 402
AUSTIN, TEXAS 78759
PHONE: 512 335 1754 FAX: 512 335 1799

IH35 @ UNIROYAL ROAD
TRAFFIC CONTROL PLAN PHASE I

0 25 50 100

SHEET 2 OF 3

FED RD DIV NO	STATE PROJECT NO		SHEET NO
6			219
STATE	STATE DIST NO	COUNTY	
TEXAS	22	WEBB	
CONT	SECT	JOB	HIGHWAY NO
0018	05	057	LOOP 20

p:\80903\unit02

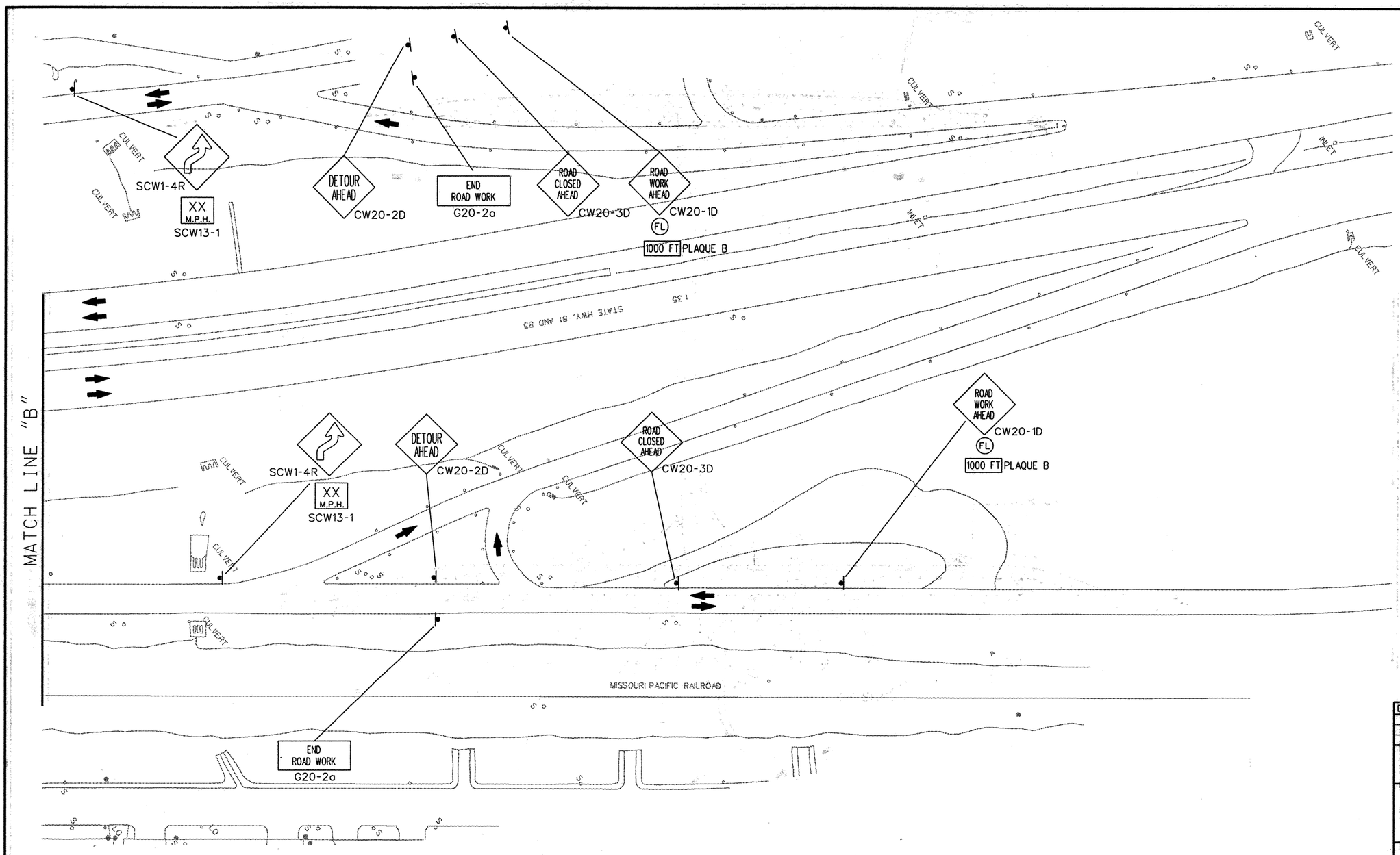

PAVEMENT MARKING LEGEND

(A) 0662 0501 WRK ZN PAV MRK REMOV (W) (4") (SLD)
(B) 0662 0502 WRK ZN PAV MRK REMOV (W) (4") (BRK)
(C) 0662 0507 WRK ZN PAV MRK REMOV (W) (8") (SLD)
(D) 0662 0511 WRK ZN PAV MRK REMOV (W) (24") (SLD)
(E) 0662 0523 WRK ZN PAV MRK REMOV (Y) (4") (SLD)
(F) 0662 0525 WRK ZN PAV MRK REMOV (Y) (4") (DOT)
(G) 0662 0532 WRK ZN PAV MRK REMOV (Y) (24") (SLD)
(H) 0662 0549 WRK ZN PAV MRK NON-REMOV (W) (4") (SLD)
(I) 0662 0553 WRK ZN PAV MRK NON-REMOV (W) (8") (SLD)
(J) 0662 0557 WRK ZN PAV MRK NON-REMOV (W) (24") (SLD)
(K) 0662 0569 WRK ZN PAV MRK NON-REMOV (Y) (4") (SLD)

LEGEND

- PERMANENT CONSTRUCTION THIS PHASE
- PERMANENT CONSTRUCTION PREVIOUS PHASE
- TEMPORARY CONSTRUCTION THIS PHASE
- TEMPORARY CONSTRUCTION PREVIOUS PHASE
- PLASTIC DRUMS
- TRAFFIC LANES
- PCTB — PORTABLE CONCRETE TRAFFIC BARRIER
- XXX XXX — SIGN PLACED IN PREVIOUS PHASE
- RIGHT OF WAY
- P — PERMANENT SIGN

STATE OF TEXAS
JEFFERY T. SEILER
77187
REGISTERED PROFESSIONAL ENGINEER

Jeffery T. Seiler
5-6-99

DATE	BY	REV	REVISION

© 1999 Texas Department of Transportation

Brown & Root
HOUSTON, TEXAS

RODRIGUEZ & HUGGINS, INC.
CONSULTING ENGINEERS
11824 JOLLYVILLE ROAD SUITE 402
AUSTIN, TEXAS 78759
PHONE: 512 335 1754 FAX: 512 335 1799

IH35 @ UNIROYAL ROAD
TRAFFIC CONTROL PLAN PHASE 1

0 25 50 100

SHEET 3 OF 3

FED RD DIV NO	STATE PROJECT NO		SHEET NO
6			220
STATE	STATE DIST NO	COUNTY	
TEXAS	22	WEBB	
CONT	SECT	JOB	HIGHWAY NO
0018	05	057	LOOP 20

p:\80903\unite03

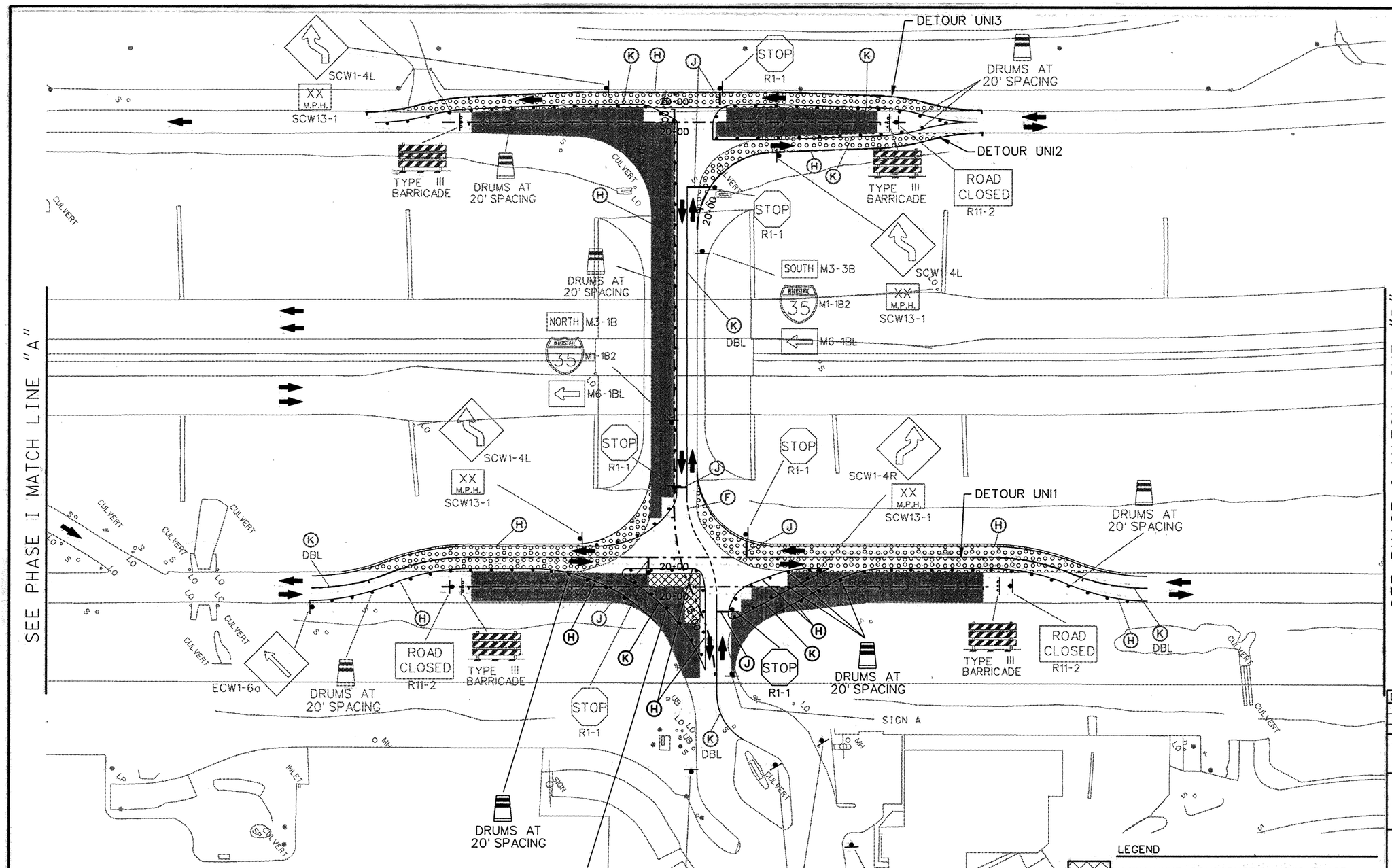

NOTE: SEE HORIZONTAL ALIGNMENT DATA SHEET FOR ALIGNMENT DETAILS

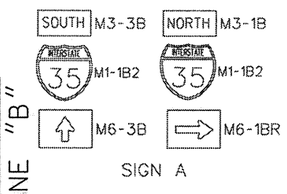

PAVEMENT MARKING LEGEND

A	0662 0501 WRK ZN PAV MRK REMOV (W) (4") (SLD)
B	0662 0502 WRK ZN PAV MRK REMOV (W) (4") (BRK)
C	0662 0507 WRK ZN PAV MRK REMOV (W) (8") (SLD)
D	0662 0511 WRK ZN PAV MRK REMOV (W) (24") (SLD)
E	0662 0523 WRK ZN PAV MRK REMOV (Y) (4") (SLD)
F	0662 0525 WRK ZN PAV MRK REMOV (Y) (4") (DOT)
G	0662 0532 WRK ZN PAV MRK REMOV (Y) (24") (SLD)
H	0662 0549 WRK ZN PAV MRK NON-REMOV (W) (4") (SLD)
I	0662 0553 WRK ZN PAV MRK NON-REMOV (W) (8") (SLD)
J	0662 0557 WRK ZN PAV MRK NON-REMOV (W) (24") (SLD)
K	0662 0569 WRK ZN PAV MRK NON-REMOV (Y) (4") (SLD)

LEGEND

- PERMANENT CONSTRUCTION THIS PHASE
- PERMANENT CONSTRUCTION PREVIOUS PHASE
- TEMPORARY CONSTRUCTION THIS PHASE
- TEMPORARY CONSTRUCTION PREVIOUS PHASE
- PLASTIC DRUMS
- TRAFFIC LANES
- PCTB PORTABLE CONCRETE TRAFFIC BARRIER
- XXX XXX SIGN PLACED IN PREVIOUS PHASE
- RIGHT OF WAY
- P PERMANENT SIGN

STATE OF TEXAS
JEFFERY T. SEILER
77187
REGISTERED PROFESSIONAL ENGINEER

Jeffery T. Seiler
5-12-99

DATE	BY	REV	REVISION

© 1999 Texas Department of Transportation

Brown & Root
HOUSTON, TEXAS

RODRIGUEZ & HUGGINS, INC.
CONSULTING ENGINEERS
11824 JOLLYVILLE ROAD SUITE 402
AUSTIN, TEXAS 78759
PHONE: 512 335 1754 FAX: 512 335 1799

IH35 @ UNIROYAL ROAD
TRAFFIC CONTROL PLAN PHASE IA

0 25 50 100

SHEET 1 OF 1

FED RD DIV NO	STATE PROJECT NO		SHEET NO
6			221
STATE	STATE DIST NO		COUNTY
TEXAS	22		WEBB
CONT	SECT	JOB	HIGHWAY NO
0018	05	057	LOOP 20

p:\80903\unitc1c2

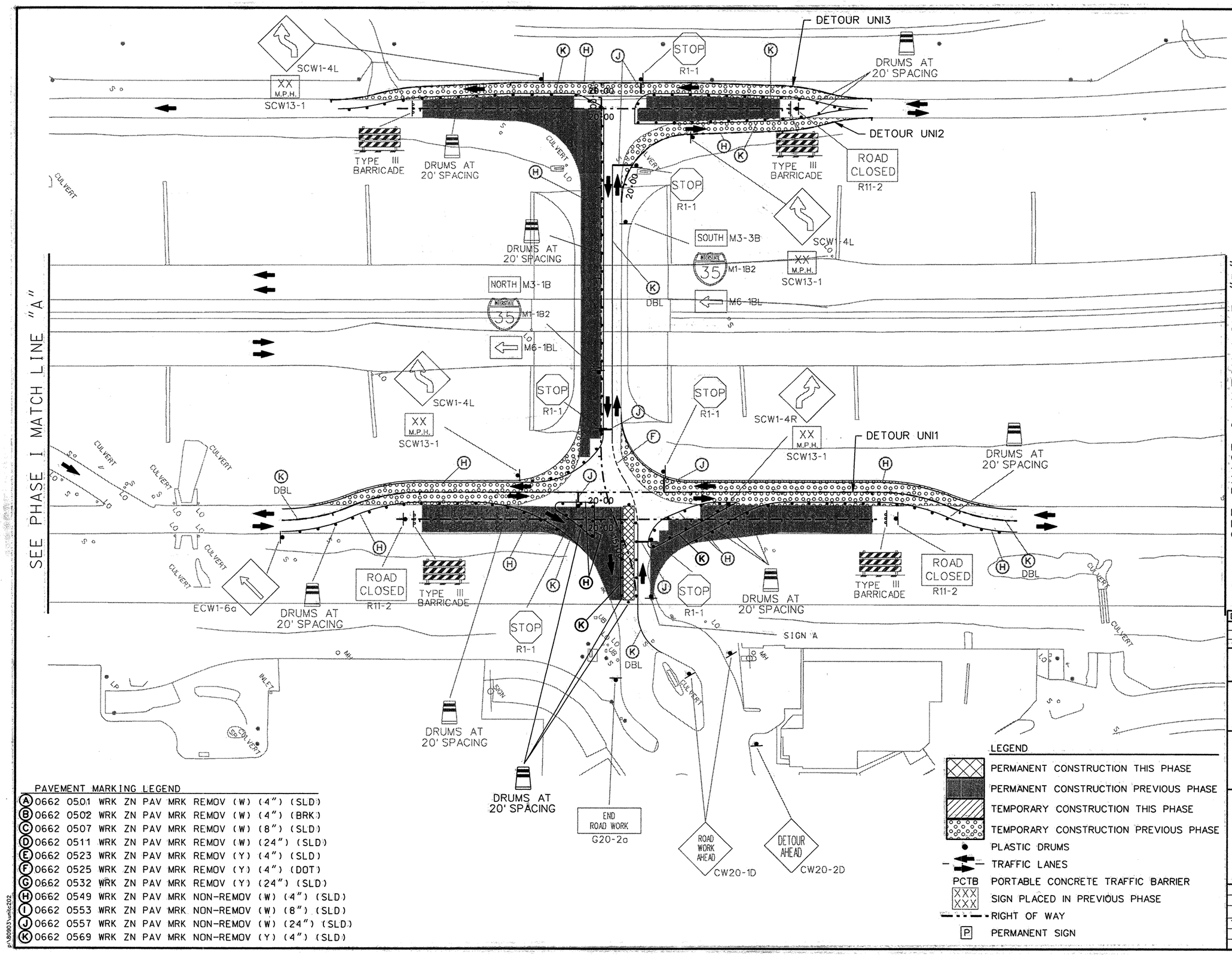

NOTE: SEE HORIZONTAL ALIGNMENT DATA SHEET FOR ALIGNMENT DETAILS

SOUTH M3-3B | NORTH M3-1B
M1-1B2 | M1-1B2
M6-3B | M6-1BR
SIGN A

PAVEMENT MARKING LEGEND

(A) 0662 0501 WRK ZN PAV MRK REMOV (W) (4") (SLD)
(B) 0662 0502 WRK ZN PAV MRK REMOV (W) (4") (BRK)
(C) 0662 0507 WRK ZN PAV MRK REMOV (W) (8") (SLD)
(D) 0662 0511 WRK ZN PAV MRK REMOV (W) (24") (SLD)
(E) 0662 0523 WRK ZN PAV MRK REMOV (Y) (4") (SLD)
(F) 0662 0525 WRK ZN PAV MRK REMOV (Y) (4") (DOT)
(G) 0662 0532 WRK ZN PAV MRK REMOV (Y) (24") (SLD)
(H) 0662 0549 WRK ZN PAV MRK NON-REMOV (W) (4") (SLD)
(I) 0662 0553 WRK ZN PAV MRK NON-REMOV (W) (8") (SLD)
(J) 0662 0557 WRK ZN PAV MRK NON-REMOV (W) (24") (SLD)
(K) 0662 0569 WRK ZN PAV MRK NON-REMOV (Y) (4") (SLD)

STATE OF TEXAS
JEFFERY T. SEILER
77187
REGISTERED PROFESSIONAL ENGINEER
5-12-99

DATE	BY	REV	REVISION

© 1999 Texas Department of Transportation

Brown & Root
HOUSTON, TEXAS

RODRIGUEZ & HUGGINS, INC.
CONSULTING ENGINEERS
11824 JOLLYVILLE ROAD SUITE 402
AUSTIN, TEXAS 78759
PHONE: 512 335 1754 FAX: 512 335 1799

IH35 @ UNIROYAL ROAD
TRAFFIC CONTROL PLAN PHASE II

0 25 50 100

SHEET 1 OF 1

FED RD DIV NO	STATE PROJECT NO		SHEET NO
6			222
STATE	STATE DIST NO		COUNTY
TEXAS	22		WEBB
CONT	SECT	JOB	HIGHWAY NO
0018	05	057	LOOP 20

p:\80903\unitc202

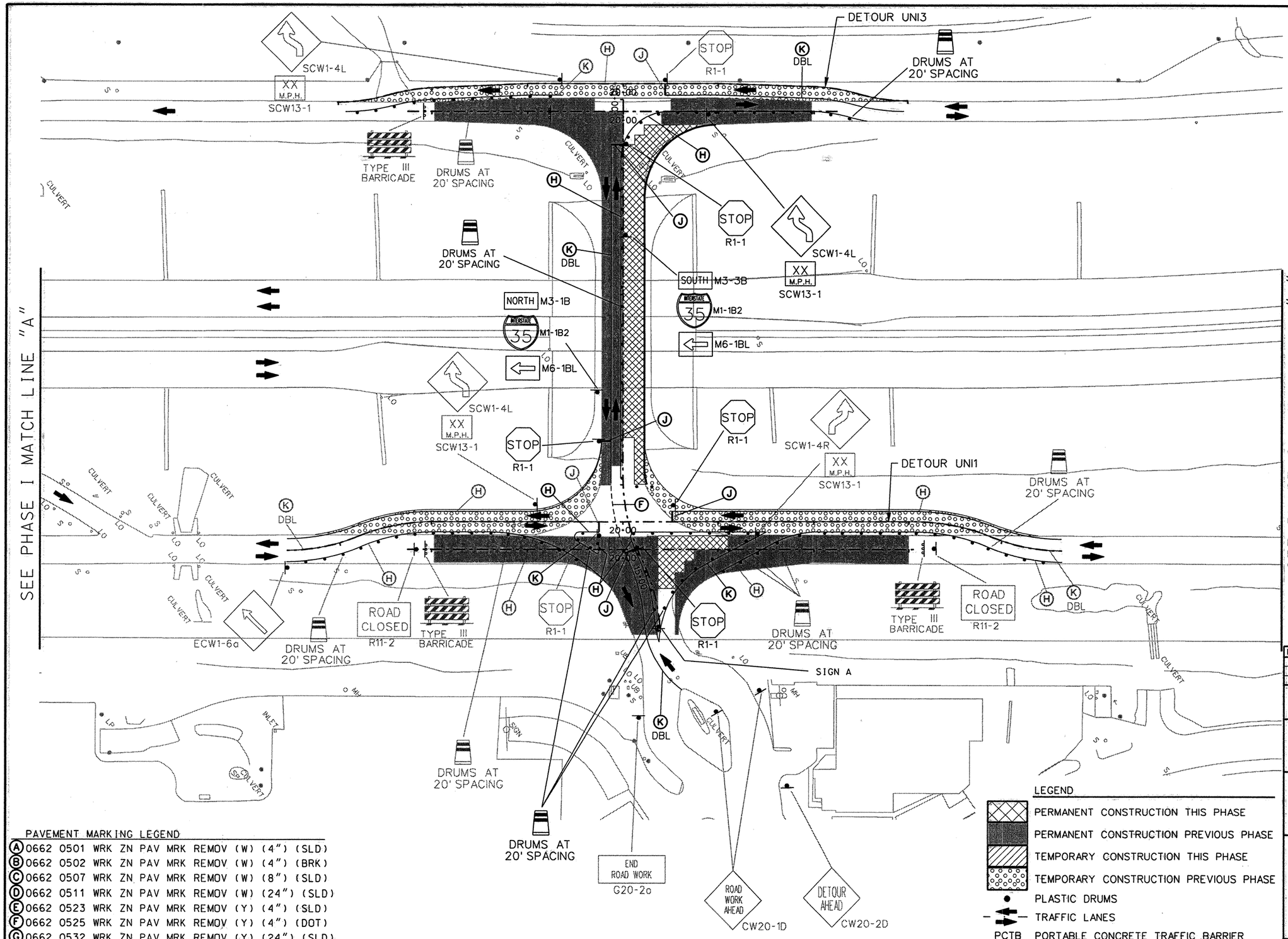

PAVEMENT MARKING LEGEND

(A) 0662 0501 WRK ZN PAV MRK REMOV (W) (4") (SLD)
(B) 0662 0502 WRK ZN PAV MRK REMOV (W) (4") (BRK)
(C) 0662 0507 WRK ZN PAV MRK REMOV (W) (8") (SLD)
(D) 0662 0511 WRK ZN PAV MRK REMOV (W) (24") (SLD)
(E) 0662 0523 WRK ZN PAV MRK REMOV (Y) (4") (SLD)
(F) 0662 0525 WRK ZN PAV MRK REMOV (Y) (4") (DOT)
(G) 0662 0532 WRK ZN PAV MRK REMOV (Y) (24") (SLD)
(H) 0662 0549 WRK ZN PAV MRK NON-REMOV (W) (4") (SLD)
(I) 0662 0553 WRK ZN PAV MRK NON-REMOV (W) (8") (SLD)
(J) 0662 0557 WRK ZN PAV MRK NON-REMOV (W) (24") (SLD)
(K) 0662 0569 WRK ZN PAV MRK NON-REMOV (Y) (4") (SLD)

LEGEND

- PERMANENT CONSTRUCTION THIS PHASE
- PERMANENT CONSTRUCTION PREVIOUS PHASE
- TEMPORARY CONSTRUCTION THIS PHASE
- TEMPORARY CONSTRUCTION PREVIOUS PHASE
- PLASTIC DRUMS
- TRAFFIC LANES
- PCTB — PORTABLE CONCRETE TRAFFIC BARRIER
- XXX XXX — SIGN PLACED IN PREVIOUS PHASE
- RIGHT OF WAY
- P — PERMANENT SIGN

STATE OF TEXAS
JEFFERY T. SEILER
77187
REGISTERED PROFESSIONAL ENGINEER
5-12-99

DATE	BY	REV	REVISION

© 1999 Texas Department of Transportation

Brown & Root
HOUSTON, TEXAS

RODRIGUEZ & HUGGINS, INC.
CONSULTING ENGINEERS
11824 JOLLYVILLE ROAD SUITE 402
AUSTIN, TEXAS 78759
PHONE: 512 335 1754 FAX: 512 335 1799

IH35 @ UNIROYAL ROAD
TRAFFIC CONTROL PLAN PHASE III

0 25 50 100

SHEET 1 OF 1

FED RD DIV NO	STATE PROJECT NO		SHEET NO
6			223
STATE	STATE DIST NO		COUNTY
TEXAS	22		WEBB
CONT	SECT	JOB	HIGHWAY NO
0018	05	057	LOOP 20

p:\80903\unitc302

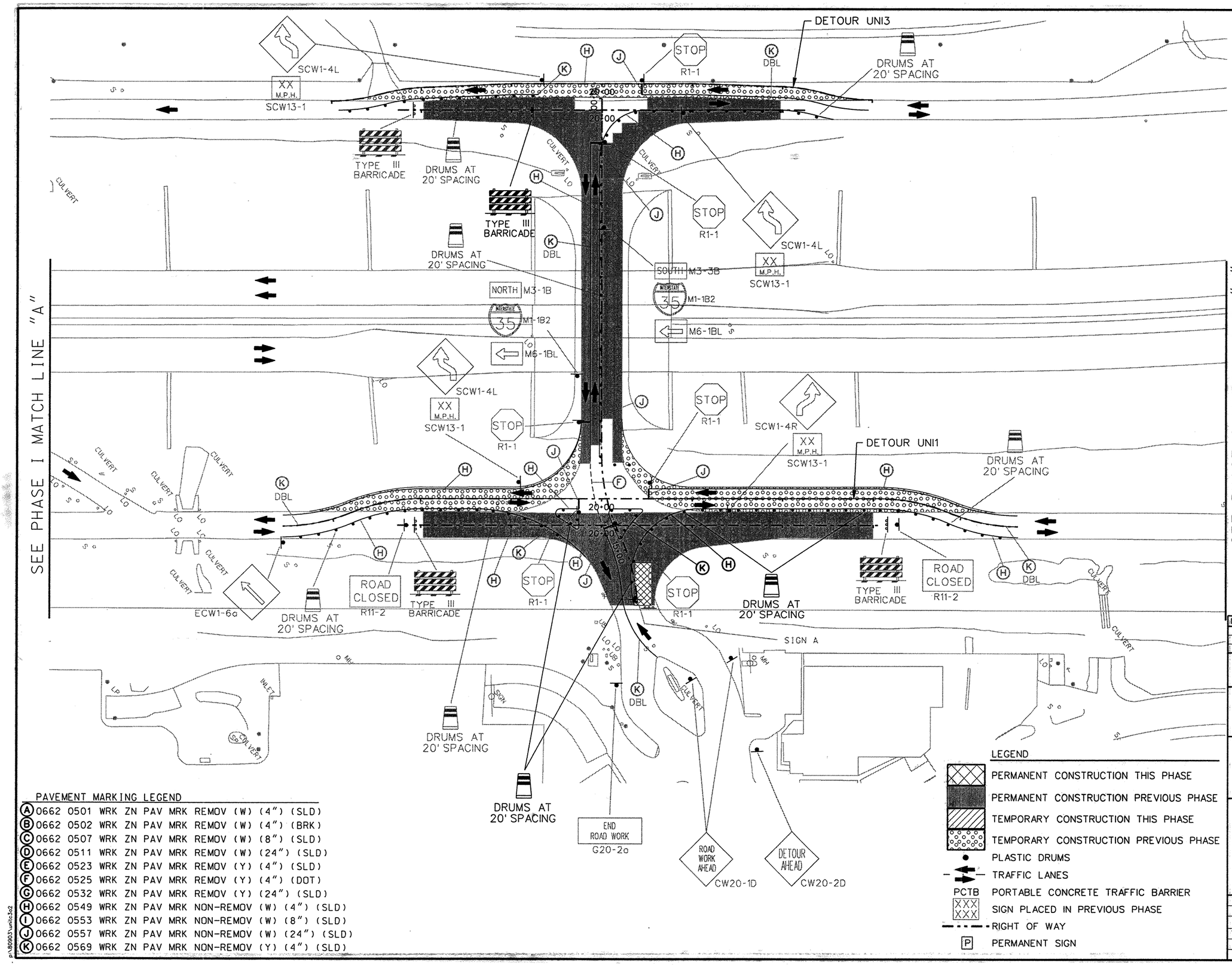

PAVEMENT MARKING LEGEND

(A) 0662 0501 WRK ZN PAV MRK REMOV (W) (4") (SLD)
(B) 0662 0502 WRK ZN PAV MRK REMOV (W) (4") (BRK)
(C) 0662 0507 WRK ZN PAV MRK REMOV (W) (8") (SLD)
(D) 0662 0511 WRK ZN PAV MRK REMOV (W) (24") (SLD)
(E) 0662 0523 WRK ZN PAV MRK REMOV (Y) (4") (SLD)
(F) 0662 0525 WRK ZN PAV MRK REMOV (Y) (4") (DOT)
(G) 0662 0532 WRK ZN PAV MRK REMOV (Y) (24") (SLD)
(H) 0662 0549 WRK ZN PAV MRK NON-REMOV (W) (4") (SLD)
(I) 0662 0553 WRK ZN PAV MRK NON-REMOV (W) (8") (SLD)
(J) 0662 0557 WRK ZN PAV MRK NON-REMOV (W) (24") (SLD)
(K) 0662 0569 WRK ZN PAV MRK NON-REMOV (Y) (4") (SLD)

STATE OF TEXAS
JEFFERY T. SEILER
77187
REGISTERED PROFESSIONAL ENGINEER

Jeffery T. Seiler
5-12-99

DATE	BY	REV	REVISION

© 1999 Texas Department of Transportation

Brown & Root
HOUSTON, TEXAS

RODRIGUEZ & HUGGINS, INC.
CONSULTING ENGINEERS
11824 JOLLYVILLE ROAD SUITE 402
AUSTIN, TEXAS 78759
PHONE: 512 335 1754 FAX: 512 335 1799

IH35 @ UNIROYAL ROAD
TRAFFIC CONTROL PLAN PHASE IIIA

0 25 50 100

SHEET 1 OF 1

FED RD DIV NO	STATE PROJECT NO		SHEET NO
6			224
STATE	STATE DIST NO		COUNTY
TEXAS	22		WEBB
CONT	SECT	JOB	HIGHWAY NO
0018	05	057	LOOP 20

p:\80903\unitc3s2

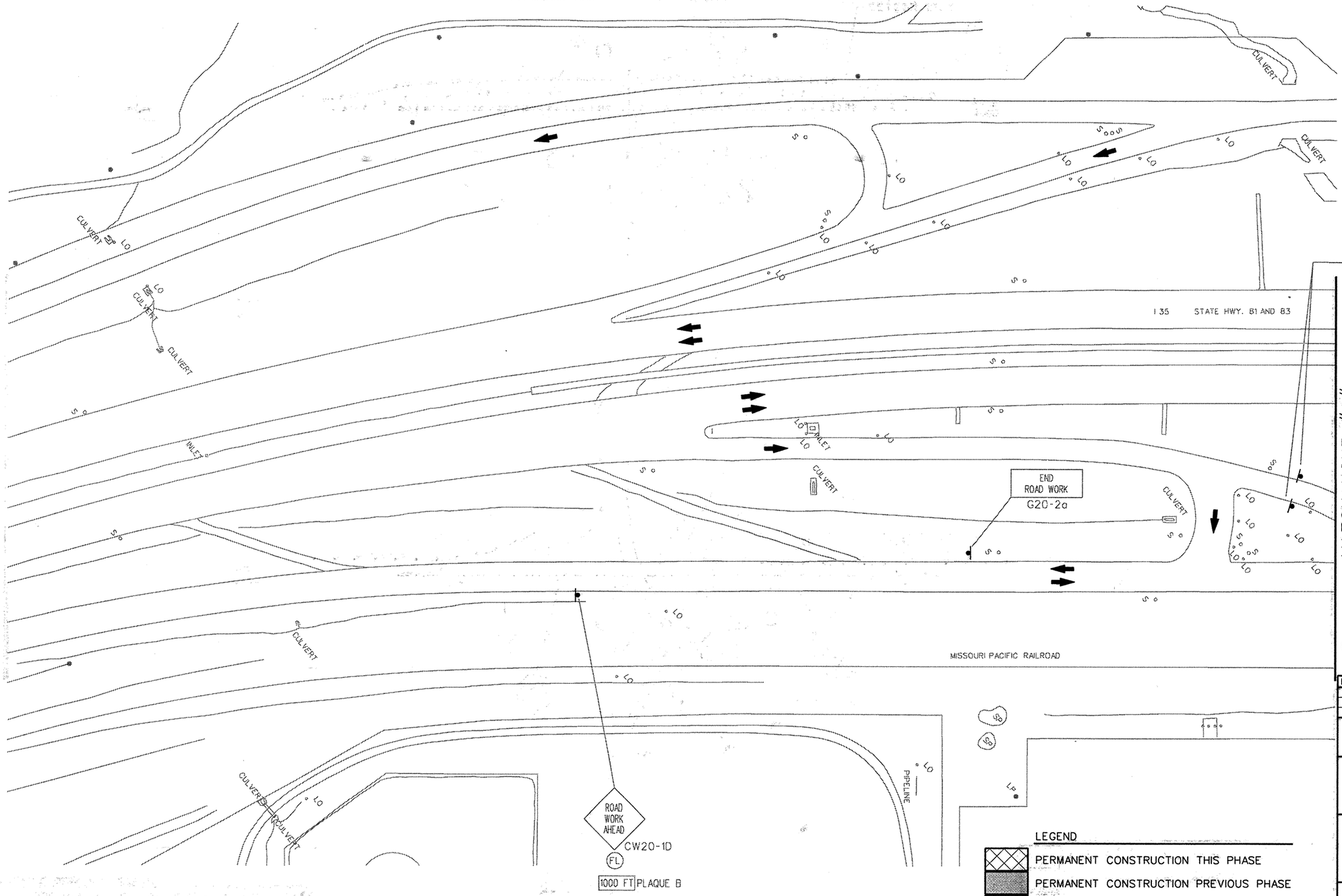

LEGEND

- PERMANENT CONSTRUCTION THIS PHASE
- PERMANENT CONSTRUCTION PREVIOUS PHASE
- TEMPORARY CONSTRUCTION THIS PHASE
- TEMPORARY CONSTRUCTION PREVIOUS PHASE
- PLASTIC DRUMS
- TRAFFIC LANES
- PCTB PORTABLE CONCRETE TRAFFIC BARRIER
- XXX XXX SIGN PLACED IN PREVIOUS PHASE
- RIGHT OF WAY
- P PERMANENT SIGN

STATE OF TEXAS
JEFFERY T. SEILER
77187
REGISTERED PROFESSIONAL ENGINEER

Jeffery T. Seiler 5-6-99

DATE	BY	REV	REVISION

© 1999 Texas Department of Transportation

Brown & Root
HOUSTON, TEXAS

RHI
RODRIGUEZ & HUGGINS, INC.
CONSULTING ENGINEERS
11824 JOLLYVILLE ROAD SUITE 402
AUSTIN, TEXAS 78759
PHONE: 512 335 1754 FAX: 512 335 1799

IH35 @ UNIROYAL ROAD
TRAFFIC CONTROL PLAN PHASE IV

0 25 50 100

SHEET 1 OF 3

FED RD DIV NO	STATE PROJECT NO		SHEET NO
6			225
STATE	STATE DIST NO		COUNTY
TEXAS	22		WEBB
CONT	SECT	JOB	HIGHWAY NO
0018	05	057	LOOP 20

p:\80903\unitc401

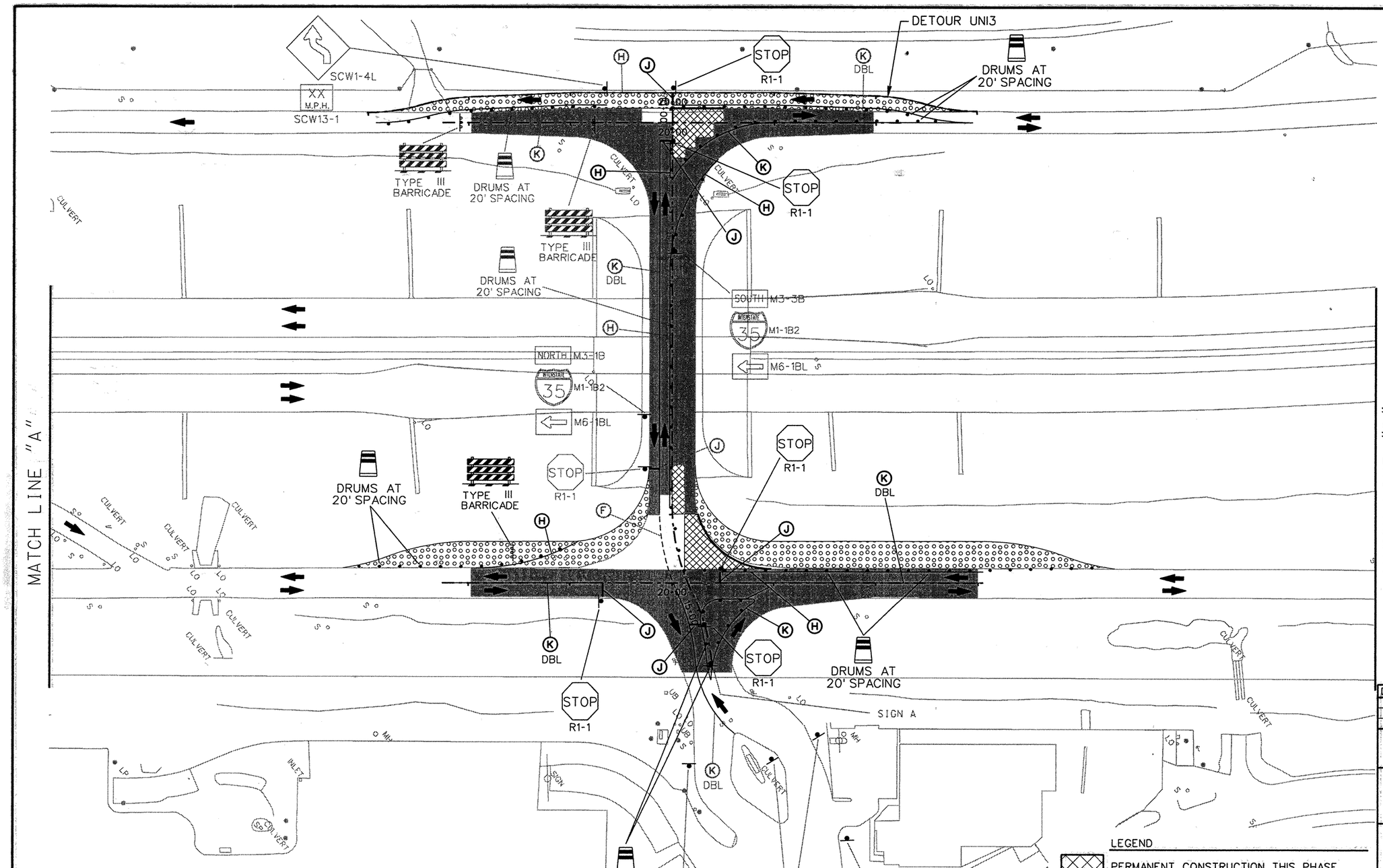

NOTE: SEE HORIZONTAL ALIGNMENT DATA SHEET FOR ALIGNMENT DETAILS

SOUTH M3-3B | NORTH M3-1B
M1-1B2 | M1-1B2
M6-3B | M6-2BR
SIGN A

PAVEMENT MARKING LEGEND

(A) 0662 0501 WRK ZN PAV MRK REMOV (W) (4") (SLD)
(B) 0662 0502 WRK ZN PAV MRK REMOV (W) (4") (BRK)
(C) 0662 0507 WRK ZN PAV MRK REMOV (W) (8") (SLD)
(D) 0662 0511 WRK ZN PAV MRK REMOV (W) (24") (SLD)
(E) 0662 0523 WRK ZN PAV MRK REMOV (Y) (4") (SLD)
(F) 0662 0525 WRK ZN PAV MRK REMOV (Y) (4") (DOT)
(G) 0662 0532 WRK ZN PAV MRK REMOV (Y) (24") (SLD)
(H) 0662 0549 WRK ZN PAV MRK NON-REMOV (W) (4") (SLD)
(I) 0662 0553 WRK ZN PAV MRK NON-REMOV (W) (8") (SLD)
(J) 0662 0557 WRK ZN PAV MRK NON-REMOV (W) (24") (SLD)
(K) 0662 0569 WRK ZN PAV MRK NON-REMOV (Y) (4") (SLD)

LEGEND

- PERMANENT CONSTRUCTION THIS PHASE
- PERMANENT CONSTRUCTION PREVIOUS PHASE
- TEMPORARY CONSTRUCTION THIS PHASE
- TEMPORARY CONSTRUCTION PREVIOUS PHASE
- PLASTIC DRUMS
- TRAFFIC LANES
- PCTB — PORTABLE CONCRETE TRAFFIC BARRIER
- SIGN PLACED IN PREVIOUS PHASE
- RIGHT OF WAY
- P — PERMANENT SIGN

STATE OF TEXAS
JEFFERY T. SEILER
77187
REGISTERED PROFESSIONAL ENGINEER

Jeffery T. Seiler
5-12-99

DATE	BY	REV	REVISION

© 1999 Texas Department of Transportation

Brown & Root
HOUSTON, TEXAS

RODRIGUEZ & HUGGINS, INC.
CONSULTING ENGINEERS
11824 JOLLYVILLE ROAD SUITE 402
AUSTIN, TEXAS 78759
PHONE: 512 335 1754 FAX: 512 335 1799

IH35 @ UNIROYAL ROAD
TRAFFIC CONTROL PLAN PHASE IV

0 25 50 100

SHEET 2 OF 3

FED RD DIV NO	STATE PROJECT NO		SHEET NO
6			226
STATE	STATE DIST NO	COUNTY	
TEXAS	22	WEBB	
CONT	SECT	JOB	HIGHWAY NO
0018	05	057	LOOP 20

p:\80903\unitc402

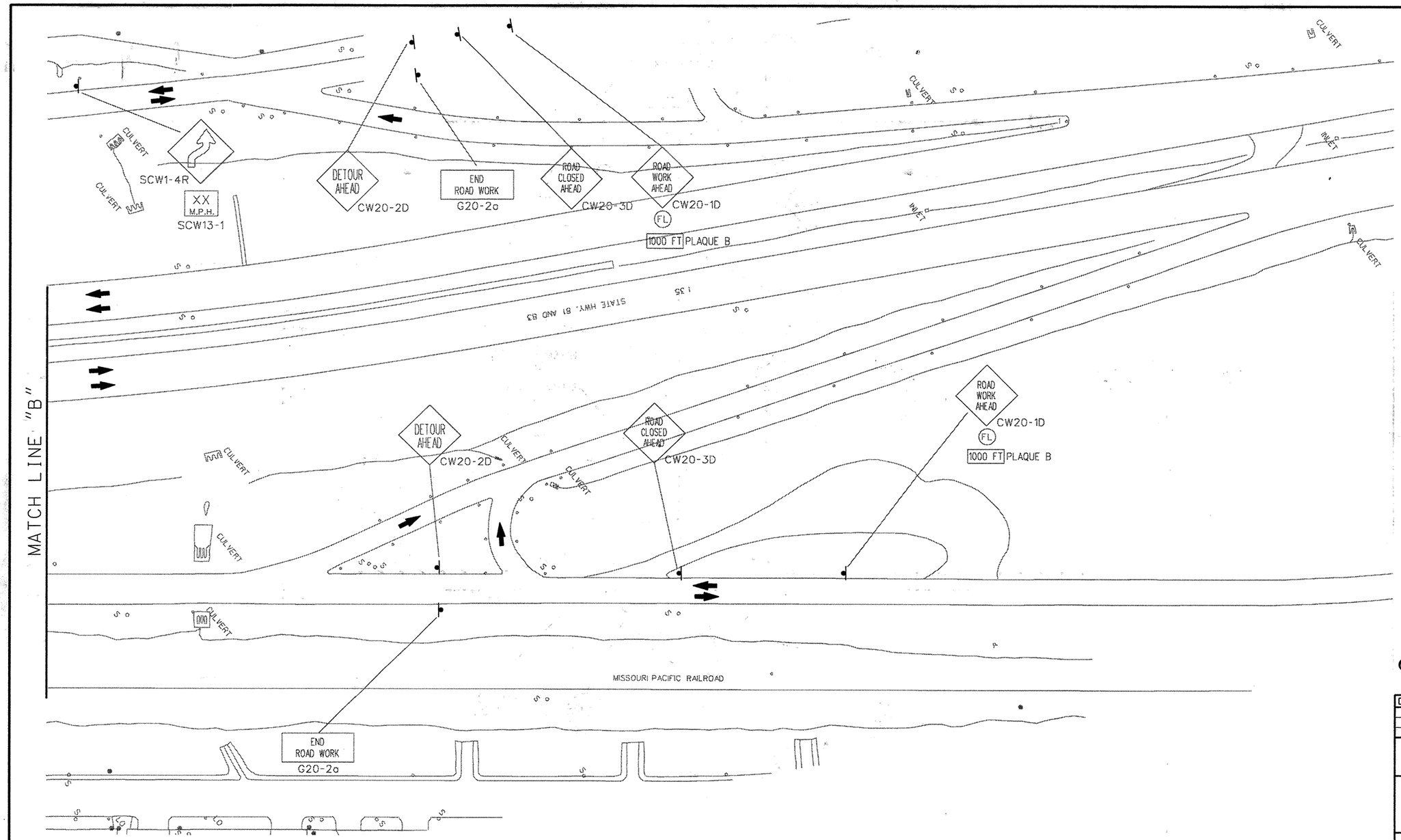

PAVEMENT MARKING LEGEND

(A) 0662 0501 WRK ZN PAV MRK REMOV (W) (4") (SLD)
(B) 0662 0502 WRK ZN PAV MRK REMOV (W) (4") (BRK)
(C) 0662 0507 WRK ZN PAV MRK REMOV (W) (8") (SLD)
(D) 0662 0511 WRK ZN PAV MRK REMOV (W) (24") (SLD)
(E) 0662 0523 WRK ZN PAV MRK REMOV (Y) (4") (SLD)
(F) 0662 0525 WRK ZN PAV MRK REMOV (Y) (4") (DOT)
(G) 0662 0532 WRK ZN PAV MRK REMOV (Y) (24") (SLD)
(H) 0662 0549 WRK ZN PAV MRK NON-REMOV (W) (4") (SLD)
(I) 0662 0553 WRK ZN PAV MRK NON-REMOV (W) (8") (SLD)
(J) 0662 0557 WRK ZN PAV MRK NON-REMOV (W) (24") (SLD)
(K) 0662 0569 WRK ZN PAV MRK NON-REMOV (Y) (4") (SLD)

LEGEND

- PERMANENT CONSTRUCTION THIS PHASE
- PERMANENT CONSTRUCTION PREVIOUS PHASE
- TEMPORARY CONSTRUCTION THIS PHASE
- TEMPORARY CONSTRUCTION PREVIOUS PHASE
- PLASTIC DRUMS
- TRAFFIC LANES
- PCTB — PORTABLE CONCRETE TRAFFIC BARRIER
- XXX / XXX — SIGN PLACED IN PREVIOUS PHASE
- RIGHT OF WAY
- P — PERMANENT SIGN

STATE OF TEXAS
JEFFERY T. SEILER
77187
REGISTERED PROFESSIONAL ENGINEER

Jeffery T. Seiler 5-6-99

DATE	BY	REV	REVISION

© 1999 Texas Department of Transportation

Brown & Root
HOUSTON, TEXAS

RODRIGUEZ & HUGGINS, INC.
CONSULTING ENGINEERS
11824 JOLLYVILLE ROAD SUITE 402
AUSTIN, TEXAS 78759
PHONE: 512 335 1754 FAX: 512 335 1799

IH35 @ UNIROYAL ROAD
TRAFFIC CONTROL PLAN PHASE IV

0 25 50 100

SHEET 3 OF 3

FED RD DIV NO	STATE PROJECT NO		SHEET NO
6			227
STATE	STATE DIST NO		COUNTY
TEXAS	22		WEBB
CONT	SECT	JOB	HIGHWAY NO
0018	05	057	LOOP 20

p:\80903\unitc403

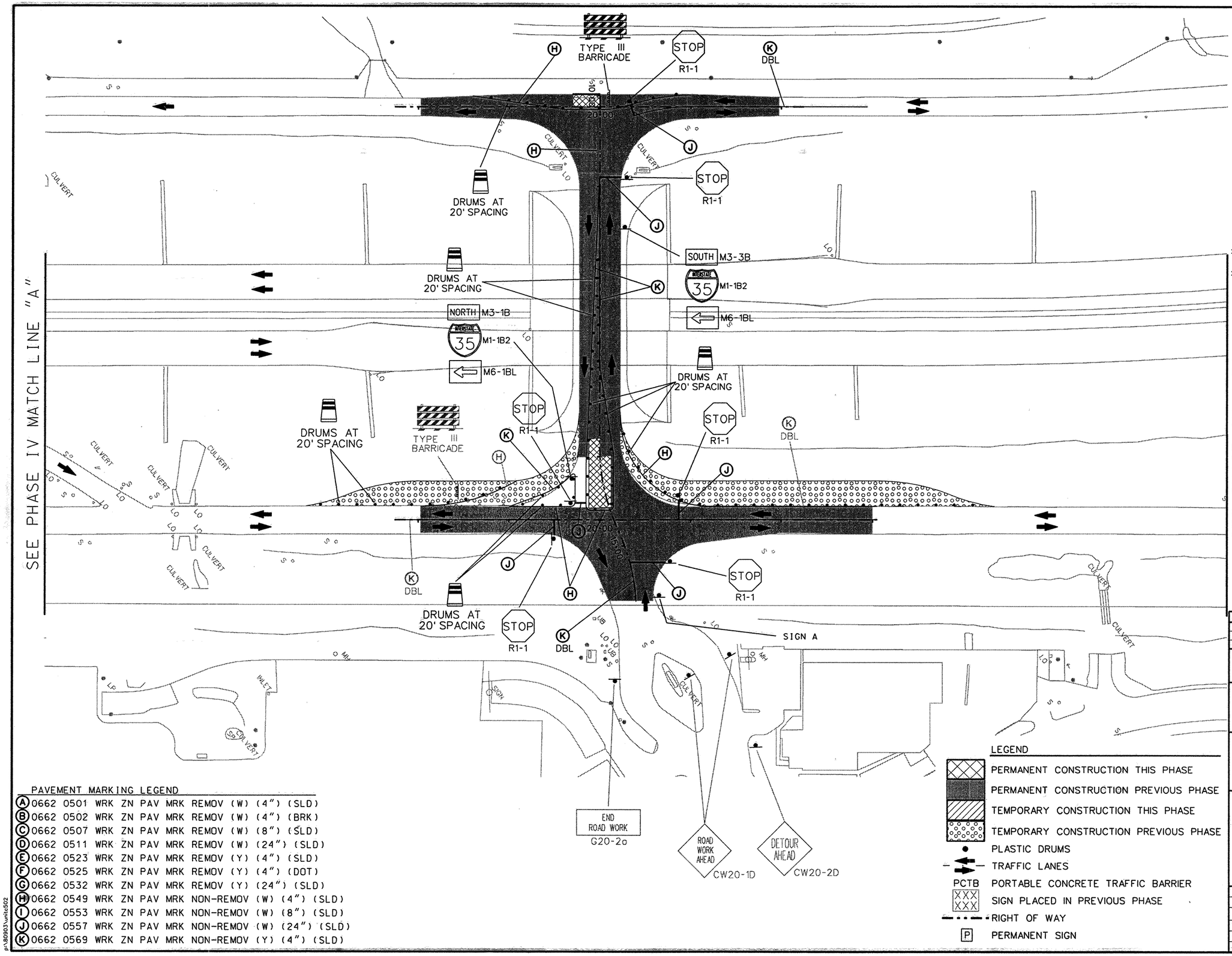

NOTE: SEE HORIZONTAL ALIGNMENT DATA SHEET FOR ALIGNMENT DETAILS

SOUTH M3-3B | NORTH M3-1B
35 M1-1B2 | 35 M1-1B2
M6-3B | M6-2BR

SIGN A

PAVEMENT MARKING LEGEND

(A) 0662 0501 WRK ZN PAV MRK REMOV (W) (4") (SLD)
(B) 0662 0502 WRK ZN PAV MRK REMOV (W) (4") (BRK)
(C) 0662 0507 WRK ZN PAV MRK REMOV (W) (8") (SLD)
(D) 0662 0511 WRK ZN PAV MRK REMOV (W) (24") (SLD)
(E) 0662 0523 WRK ZN PAV MRK REMOV (Y) (4") (SLD)
(F) 0662 0525 WRK ZN PAV MRK REMOV (Y) (4") (DOT)
(G) 0662 0532 WRK ZN PAV MRK REMOV (Y) (24") (SLD)
(H) 0662 0549 WRK ZN PAV MRK NON-REMOV (W) (4") (SLD)
(I) 0662 0553 WRK ZN PAV MRK NON-REMOV (W) (8") (SLD)
(J) 0662 0557 WRK ZN PAV MRK NON-REMOV (W) (24") (SLD)
(K) 0662 0569 WRK ZN PAV MRK NON-REMOV (Y) (4") (SLD)

LEGEND

- PERMANENT CONSTRUCTION THIS PHASE
- PERMANENT CONSTRUCTION PREVIOUS PHASE
- TEMPORARY CONSTRUCTION THIS PHASE
- TEMPORARY CONSTRUCTION PREVIOUS PHASE
- PLASTIC DRUMS
- TRAFFIC LANES
- PCTB PORTABLE CONCRETE TRAFFIC BARRIER
- XXX SIGN PLACED IN PREVIOUS PHASE
- RIGHT OF WAY
- P PERMANENT SIGN

STATE OF TEXAS
JEFFERY T. SEILER
77187
REGISTERED PROFESSIONAL ENGINEER

Jeffery T. Seiler
5-12-99

DATE	BY	REV	REVISION

© 1999 Texas Department of Transportation

Brown & Root
HOUSTON, TEXAS

RODRIGUEZ & HUGGINS, INC.
CONSULTING ENGINEERS
11824 JOLLYVILLE ROAD SUITE 402
AUSTIN, TEXAS 78759
PHONE: 512 335 1754 FAX: 512 335 1799

IH35 @ UNIROYAL ROAD
TRAFFIC CONTROL PLAN PHASE V

0 25 50 100

SHEET 1 OF 1

FED RD DIV NO	STATE PROJECT NO		SHEET NO
6			228
STATE	STATE DIST NO		COUNTY
TEXAS	22		WEBB
CONT	SECT	JOB	HIGHWAY NO
0018	05	057	LOOP 20

p:\80903\unitc502

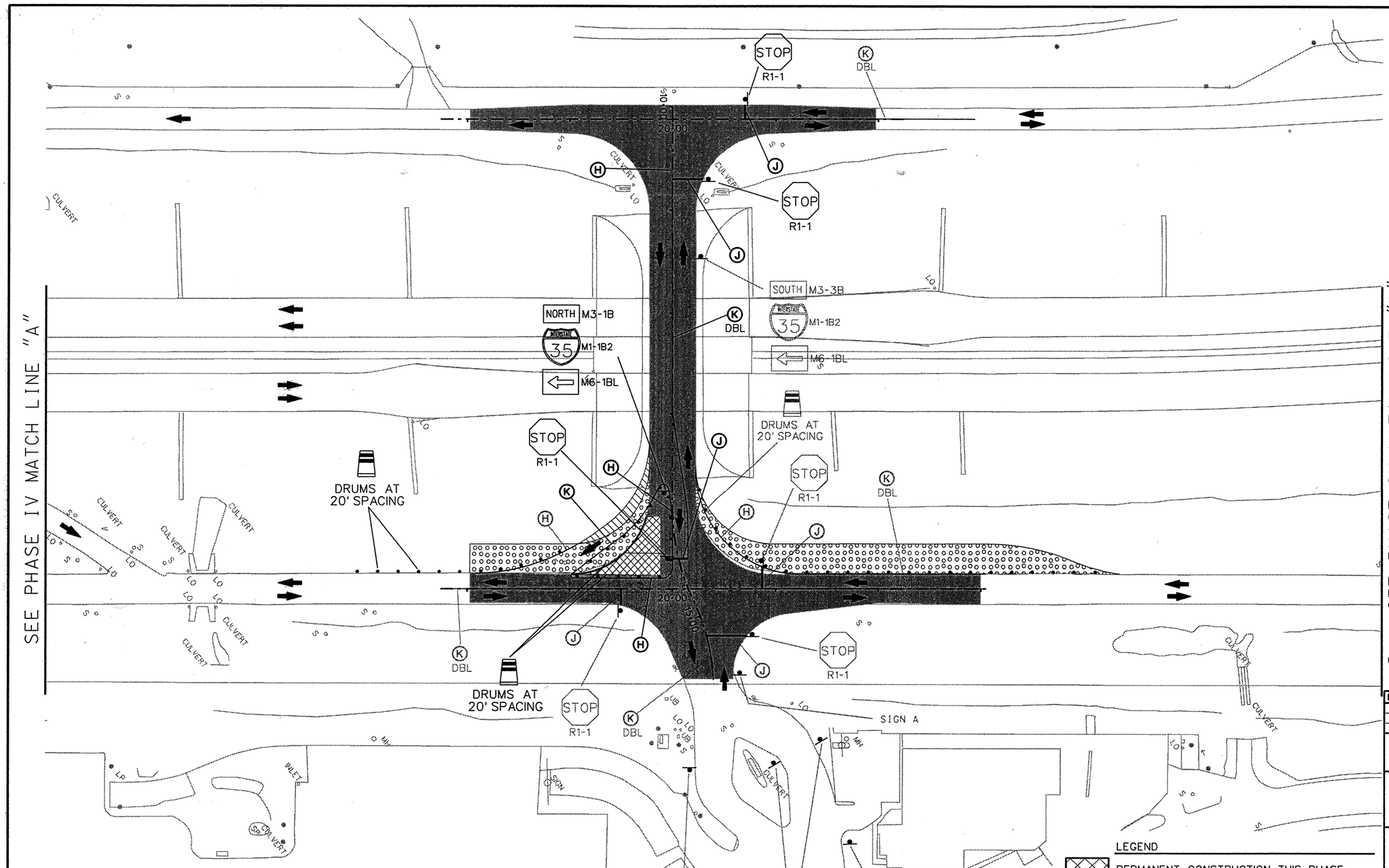

NOTE: SEE HORIZONTAL ALIGNMENT DATA SHEET FOR ALIGNMENT DETAILS

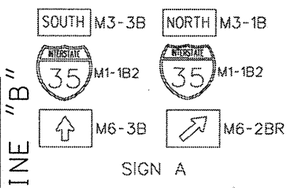

PAVEMENT MARKING LEGEND

A	0662 0501 WRK ZN PAV MRK REMOV (W) (4") (SLD)
B	0662 0502 WRK ZN PAV MRK REMOV (W) (4") (BRK)
C	0662 0507 WRK ZN PAV MRK REMOV (W) (8") (SLD)
D	0662 0511 WRK ZN PAV MRK REMOV (W) (24") (SLD)
E	0662 0523 WRK ZN PAV MRK REMOV (Y) (4") (SLD)
F	0662 0525 WRK ZN PAV MRK REMOV (Y) (4") (DOT)
G	0662 0532 WRK ZN PAV MRK REMOV (Y) (24") (SLD)
H	0662 0549 WRK ZN PAV MRK NON-REMOV (W) (4") (SLD)
I	0662 0553 WRK ZN PAV MRK NON-REMOV (W) (8") (SLD)
J	0662 0557 WRK ZN PAV MRK NON-REMOV (W) (24") (SLD)
K	0662 0569 WRK ZN PAV MRK NON-REMOV (Y) (4") (SLD)

LEGEND

- PERMANENT CONSTRUCTION THIS PHASE
- PERMANENT CONSTRUCTION PREVIOUS PHASE
- TEMPORARY CONSTRUCTION THIS PHASE
- TEMPORARY CONSTRUCTION PREVIOUS PHASE
- PLASTIC DRUMS
- TRAFFIC LANES
- PCTB PORTABLE CONCRETE TRAFFIC BARRIER
- XXX SIGN PLACED IN PREVIOUS PHASE
- RIGHT OF WAY
- P PERMANENT SIGN

STATE OF TEXAS
JEFFERY T. SEILER
77187
REGISTERED PROFESSIONAL ENGINEER

Jeffery T. Seiler
5-12-99

DATE	BY	REV	REVISION

© 1999 Texas Department of Transportation

Brown & Root
HOUSTON, TEXAS

RODRIGUEZ & HUGGINS, INC.
CONSULTING ENGINEERS
11824 JOLLYVILLE ROAD SUITE 402
AUSTIN, TEXAS 78759
PHONE: 512 335 1754 FAX: 512 335 1799

IH35 @ UNIROYAL ROAD
TRAFFIC CONTROL PLAN PHASE VI

0 25 50 100

SHEET 1 OF 1

FED RD DIV NO	STATE PROJECT NO		SHEET NO
6			229
STATE	STATE DIST NO		COUNTY
TEXAS	22		WEBB
CONT	SECT	JOB	HIGHWAY NO
0018	05	057	LOOP 20

p:\80903\unitc602

R A G 1,2,4,5, 6,7,9	12" 1 WAY HORIZONTAL 3 SECTION SIGNAL HEAD
R A G G 3,8	12" 1 WAY VERTICAL 4 SECTION SIGNAL HEAD

NOTE: SEE LOOP 20 TRAFFIC CONTROL PLAN PHASE I, SHEET 7 OF 12 (SHEET 105 OF PLAN SET) FOR BASE INFORMATION

RUN #1	3-5/C (AERIAL)
RUN #2	1-5/C (AERIAL)
RUN #3	1-5/C (AERIAL)
RUN #4	2-5/C (AERIAL)
RUN #5	5-5/C (2" CONDUIT)

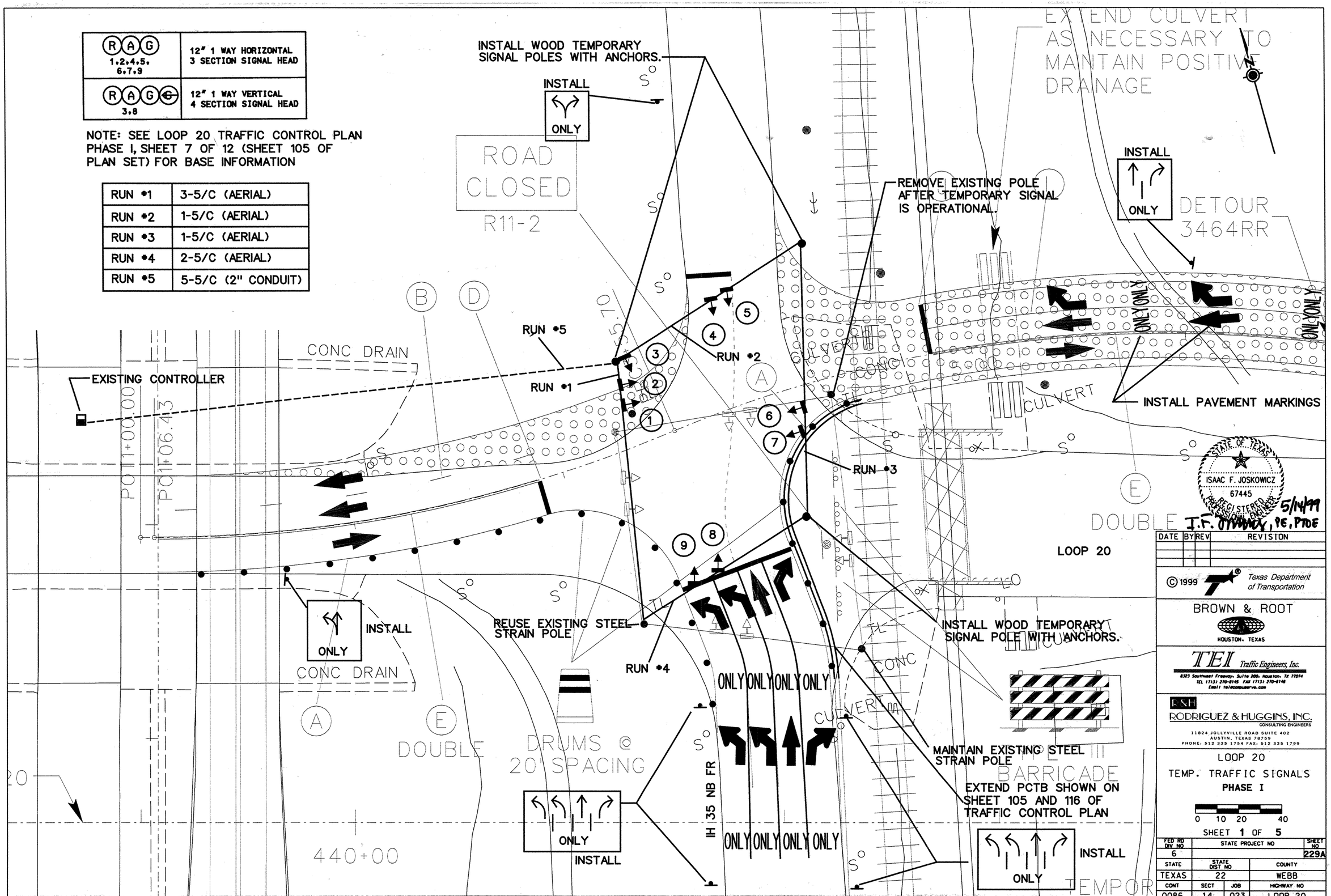

DATE	BY	REV	REVISION

© 1999 Texas Department of Transportation

BROWN & ROOT
HOUSTON, TEXAS

TEI Traffic Engineers, Inc.
8323 Southwest Freeway, Suite 200, Houston, TX 77074
TEL (713) 270-8145 FAX (713) 270-8146
Email tei@compuserve.com

R&H
RODRIGUEZ & HUGGINS, INC.
CONSULTING ENGINEERS
11824 JOLLYVILLE ROAD SUITE 402
AUSTIN, TEXAS 78759
PHONE: 512 335 1754 FAX: 512 335 1799

LOOP 20
TEMP. TRAFFIC SIGNALS
PHASE I

0 10 20 40

SHEET 1 OF 5

FED RD DIV NO	STATE PROJECT NO		SHEET NO
6			229A
STATE	STATE DIST NO		COUNTY
TEXAS	22		WEBB
CONT	SECT	JOB	HIGHWAY NO
0086	14	023	LOOP 20

SEE REVISION

R A G 1,2,4,5, 6,8	12" 1 WAY HORIZONTAL 3 SECTION SIGNAL HEAD
R A ~~G~~ G 3,7	12" 1 WAY HORIZONTAL 4 SECTION SIGNAL HEAD

NOTE: SEE LOOP 20 TRAFFIC CONTROL PLAN PHASE I, SHEET 7 OF 12 (SHEET 105 OF PLAN SET) FOR BASE INFORMATION

RUN #1	3-5/C (AERIAL)
RUN #2	4-5/C (AERIAL)
RUN #3	4-5/C (2" CONDUIT)

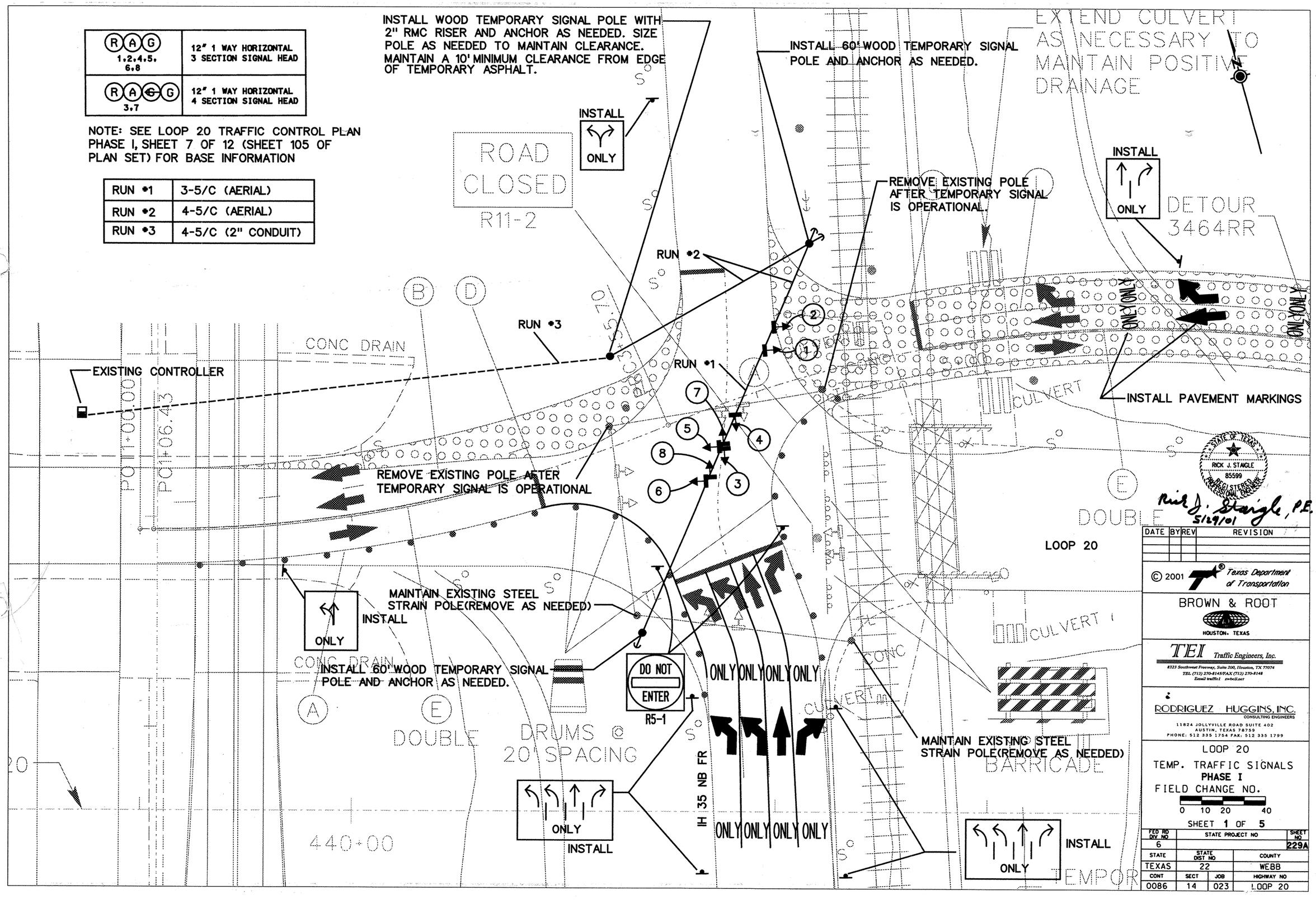

STATE OF TEXAS
RICK J. STAGLE
85599
REGISTERED PROFESSIONAL ENGINEER

Rick J. Staigle, P.E.
5/29/01

DATE	BY	REV	REVISION

© 2001 Texas Department of Transportation

BROWN & ROOT
HOUSTON, TEXAS

TEI Traffic Engineers, Inc.
8323 Southwest Freeway, Suite 200, Houston, TX 77074
TEL (713) 270-8145/FAX (713) 270-8148
Email traffic1 swbell.net

RODRIGUEZ HUGGINS, INC.
CONSULTING ENGINEERS
11824 JOLLYVILLE ROAD SUITE 402
AUSTIN, TEXAS 78759
PHONE: 512 335 1754 FAX: 512 335 1799

LOOP 20
TEMP. TRAFFIC SIGNALS
PHASE I
FIELD CHANGE NO.

0 10 20 40

SHEET 1 OF 5

FED RD DIV NO	STATE PROJECT NO		SHEET NO
6			229A
STATE	STATE DIST NO		COUNTY
TEXAS	22		WEBB
CONT	SECT	JOB	HIGHWAY NO
0086	14	023	LOOP 20

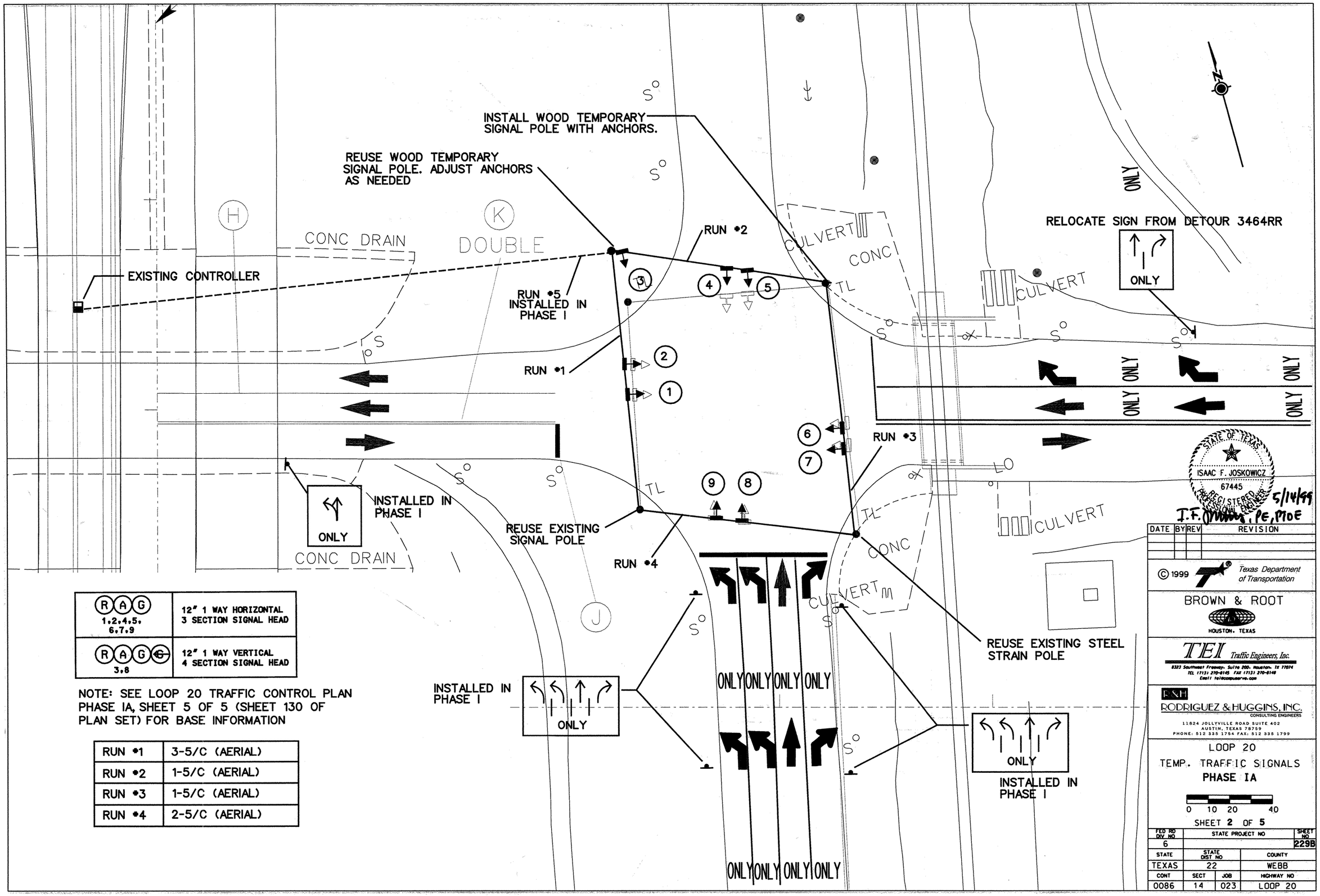

R A G 1,2,4,5, 6,7,9	12" 1 WAY HORIZONTAL 3 SECTION SIGNAL HEAD
R A G G 3,8	12" 1 WAY VERTICAL 4 SECTION SIGNAL HEAD

NOTE: SEE LOOP 20 TRAFFIC CONTROL PLAN PHASE IA, SHEET 5 OF 5 (SHEET 130 OF PLAN SET) FOR BASE INFORMATION

RUN #1	3-5/C (AERIAL)
RUN #2	1-5/C (AERIAL)
RUN #3	1-5/C (AERIAL)
RUN #4	2-5/C (AERIAL)

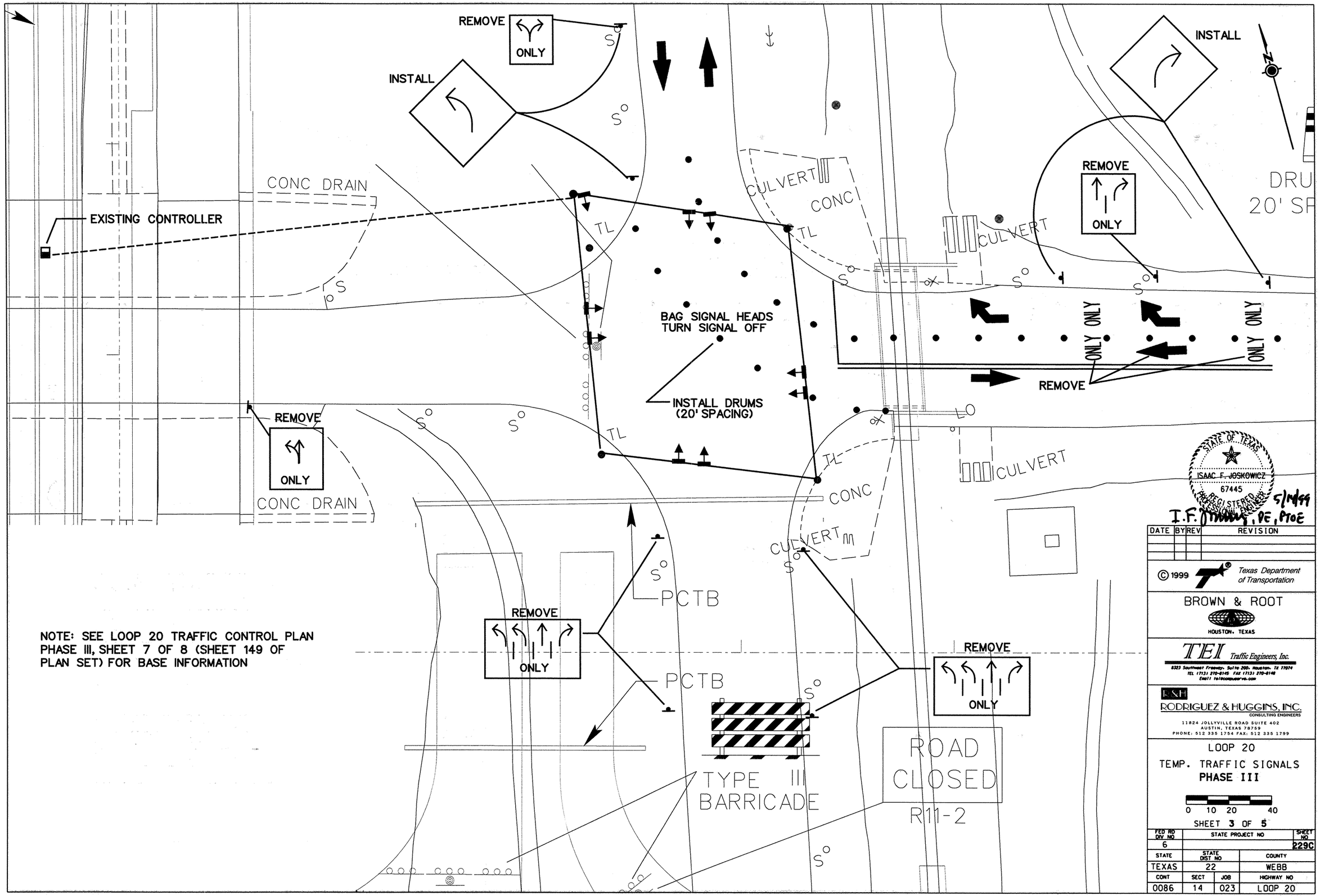
REMOVE
ONLY
INSTALL
INSTALL
REMOVE
ONLY
CONC DRAIN
EXISTING CONTROLLER
CULVERT
CONC
CULVERT
TL
TL
TL
TL
BAG SIGNAL HEADS
TURN SIGNAL OFF
INSTALL DRUMS
(20' SPACING)
ONLY ONLY
ONLY ONLY
REMOVE
REMOVE
ONLY
CONC DRAIN
CONC
CULVERT
CULVERT
PCTB
PCTB
REMOVE
ONLY
REMOVE
ONLY
TYPE III
BARRICADE
ROAD
CLOSED
R11-2
NOTE: SEE LOOP 20 TRAFFIC CONTROL PLAN
PHASE III, SHEET 7 OF 8 (SHEET 149 OF
PLAN SET) FOR BASE INFORMATION
STATE OF TEXAS
ISAAC F. JOSKOWICZ
67445
REGISTERED PROFESSIONAL ENGINEER
5/14/99
I.F. JOSKOWICZ, PE, PTOE
DATE BY REV REVISION
© 1999 Texas Department of Transportation
BROWN & ROOT
HOUSTON, TEXAS
TEI Traffic Engineers, Inc.
8323 Southwest Freeway, Suite 200, Houston, TX 77074
TEL (713) 270-0145 FAX (713) 270-0148
Email telecompuserve.com
R&H
RODRIGUEZ & HUGGINS, INC.
CONSULTING ENGINEERS
11824 JOLLYVILLE ROAD SUITE 402
AUSTIN, TEXAS 78759
PHONE: 512 335 1754 FAX: 512 335 1799
LOOP 20
TEMP. TRAFFIC SIGNALS
PHASE III
0 10 20 40
SHEET 3 OF 5
FED RD DIV NO 6
STATE PROJECT NO
SHEET NO 229C
STATE TEXAS
STATE DIST NO 22
COUNTY WEBB
CONT 0086
SECT 14
JOB 023
HIGHWAY NO LOOP 20

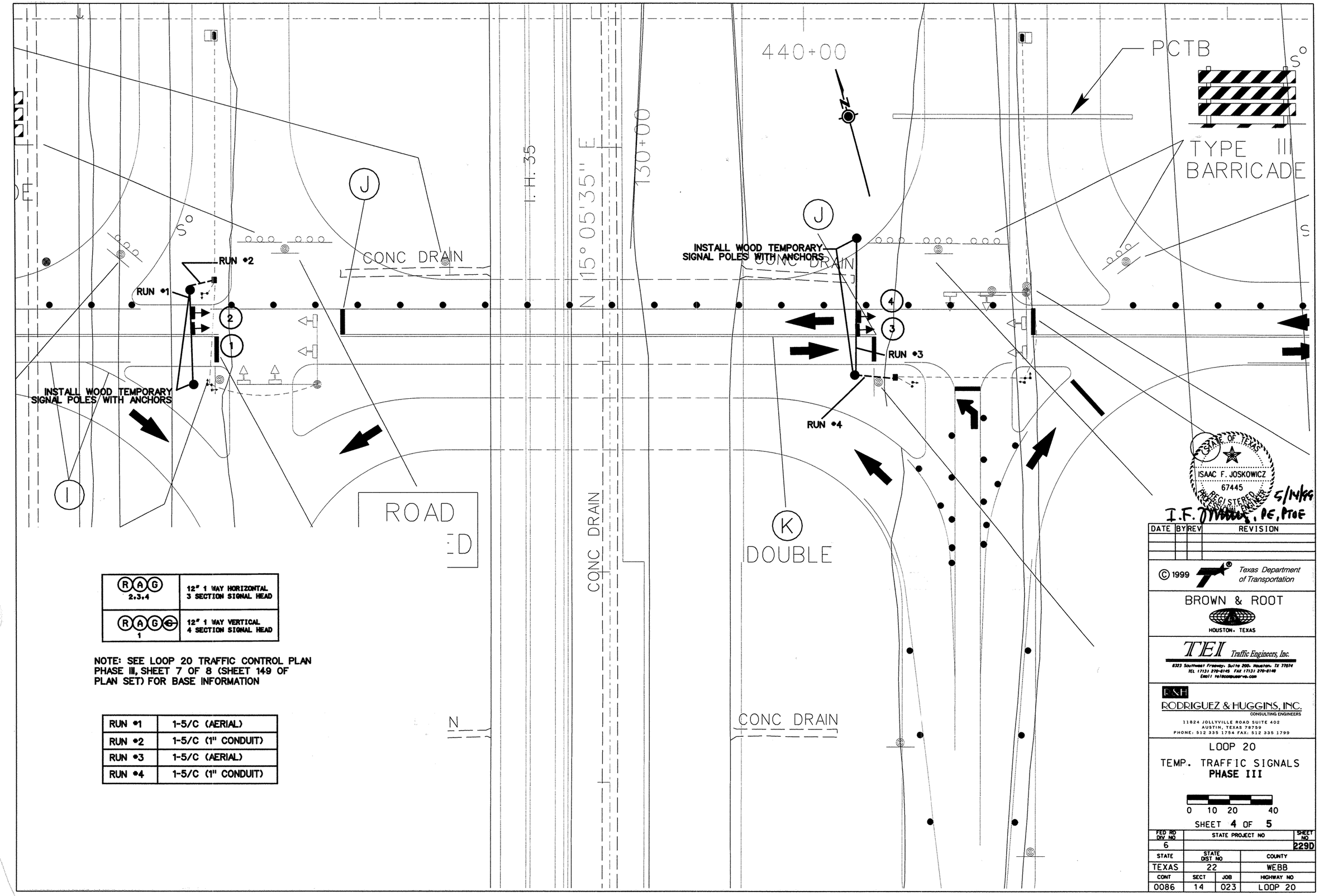

R A G 2,3,4	12" 1 WAY HORIZONTAL 3 SECTION SIGNAL HEAD
R A G ~~G~~ 1	12" 1 WAY VERTICAL 4 SECTION SIGNAL HEAD

NOTE: SEE LOOP 20 TRAFFIC CONTROL PLAN PHASE III, SHEET 7 OF 8 (SHEET 149 OF PLAN SET) FOR BASE INFORMATION

RUN #1	1-5/C (AERIAL)
RUN #2	1-5/C (1" CONDUIT)
RUN #3	1-5/C (AERIAL)
RUN #4	1-5/C (1" CONDUIT)

STATE OF TEXAS
ISAAC F. JOSKOWICZ
67445
REGISTERED PROFESSIONAL ENGINEER
5/14/99
I.F. [signature], PE, PTOE

DATE	BY	REV	REVISION

© 1999 Texas Department of Transportation

BROWN & ROOT
HOUSTON, TEXAS

TEI Traffic Engineers, Inc.
8323 Southwest Freeway, Suite 200, Houston, TX 77074
TEL (713) 270-8145 FAX (713) 270-8148
Email telecompuserve.com

R&H
RODRIGUEZ & HUGGINS, INC.
CONSULTING ENGINEERS
11824 JOLLYVILLE ROAD SUITE 402
AUSTIN, TEXAS 78759
PHONE: 512 335 1754 FAX: 512 335 1799

LOOP 20
TEMP. TRAFFIC SIGNALS
PHASE III

0 10 20 40

SHEET 4 OF 5

FED RD DIV NO	STATE PROJECT NO		SHEET NO
6			229D
STATE	STATE DIST NO		COUNTY
TEXAS	22		WEBB
CONT	SECT	JOB	HIGHWAY NO
0086	14	023	LOOP 20

DISCLAIMER
The use of this standard is governed by the "Texas Engineering Practice Act". No warranty of any kind is made by TxDOT for any purpose whatsoever. TxDOT assumes no responsibility for the conversion of this standard to other formats or for incorrect results or damages resulting from its use.

PROJECT LIMIT TRAFFIC CONTROL DEVICES

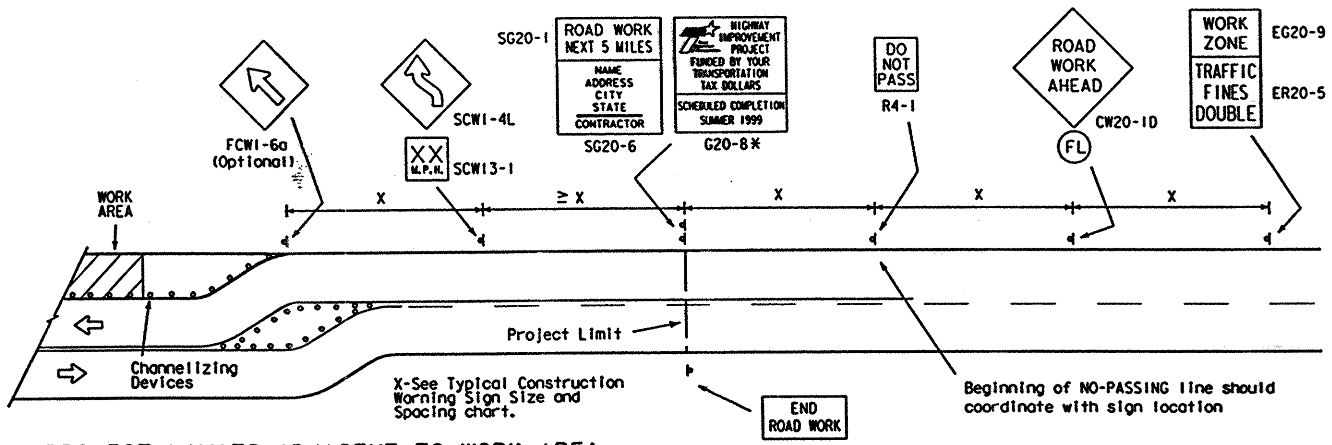

PROJECT LIMITS ADJACENT TO WORK AREA

(Less than 2000 feet between project limits and work area)

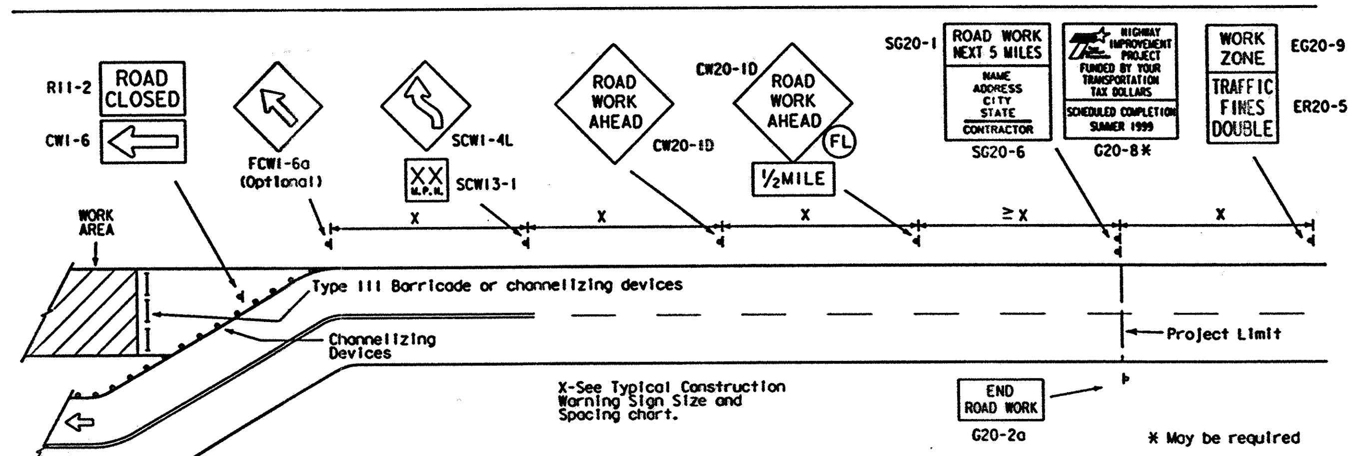

PROJECT LIMITS AWAY FROM WORK AREA

(Greater than 2000 feet but not more than 1 mile between project limits and work area)

PROJECT LIMIT GENERAL NOTES

SIGNS AND WARNING LIGHTS

1. When specified on this sheet or other sheets in the plans, warning lights for a sign shall be installed and maintained by the contractor. Warning lights shall be attached to the sign support using a 1/2" bolt (minimum) of sufficient length for three washers, lock washer and a nut.
2. Warning lights shall be maintained as directed by the Engineer.
3. Appropriate standard traffic control devices shall be used as required by the plans. Any variation in the plans shall be documented by written agreement between the Engineer and the contractor's responsible person.
4. As a general rule, additional traffic control devices in advance of the project limits should only be used in those cases where a work area, a detour, or a potentially hazardous location is less than 2000 feet inside the project limits.
5. The traffic control devices used in the above illustrations are examples only. Field conditions and engineering judgement should dictate the most appropriate traffic control devices to be used. Any variation in the plans shall be documented by written agreement between the Engineer and the contractor's responsible person.
6. As detailed above, the ROAD WORK NEXT X MILES, CONTRACTOR and END ROAD WORK signs shall be erected at or near the project limits and the WORK ZONE TRAFFIC FINES DOUBLE sign shall be erected in advance of the project limits. These signs should be adjusted to provide adequate spacing to other signs. The OBSERVE WARNING SIGNS STATE LAW sign shall be installed when required elsewhere in the plans.
7. With the agreement of an adjacent project Engineer, the Engineer(s) may allow the omission of END ROAD WORK, TRAFFIC FINES DOUBLE, and other advance warning signs if the signing would be redundant and the work areas appear continuous to the motorists. If the adjacent project is completed first, the contractor will erect the necessary warning signs as shown on these sheets, the TCP sheets or as directed by the Engineer. The ROAD WORK NEXT X MILES sign shall be revised to show appropriate work zone distance.
8. Duplicate construction warning signs should be erected on the median side of divided highways where median width will permit and traffic volumes justifies the signing.
9. Except for devices required by Note 6, traffic control devices should be in place only while work is actually in progress or a definite need exists.
10. Sign size should be based on the "Texas Manual on Uniform Traffic Control Devices for Streets and Highways" (TMUTCD).
11. The Special Public Information sign (G20-8 shall be installed at the project limits when required elsewhere in the plans. Refer to SMD Standards for approved mounting details.

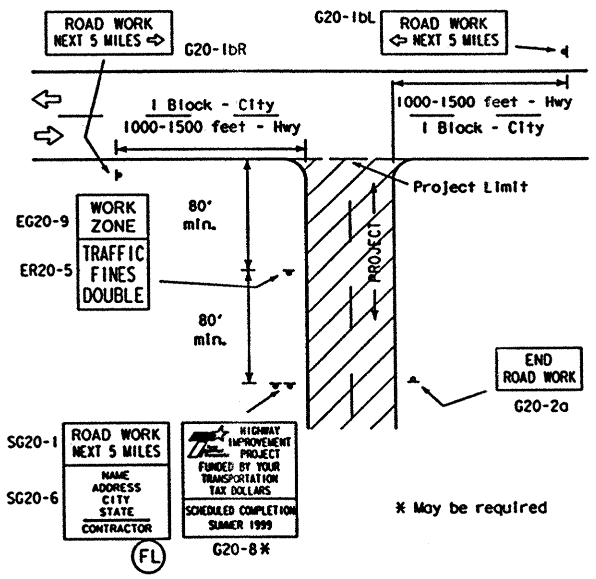

PROJECT LIMITS AT T-INTERSECTION

1. The ROAD WORK NEXT X MILES sign should be erected on the intersected highway as detailed above.
2. On the intersected roadway, additional traffic control devices, such as a flagger and accompanying signs or other signs, should be used when work is being performed at or near the intersection.

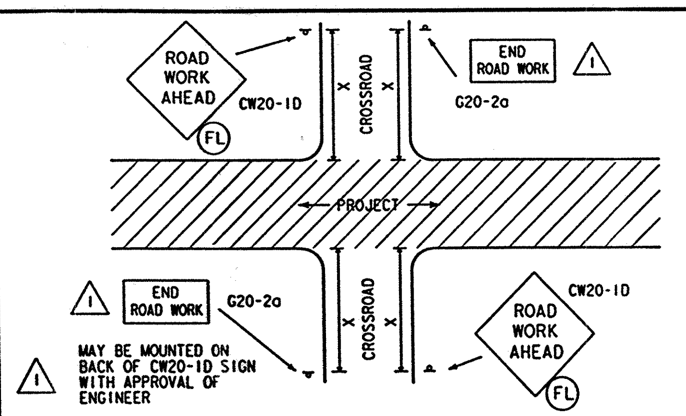

CROSSROAD SIGNING AND BARRICADING

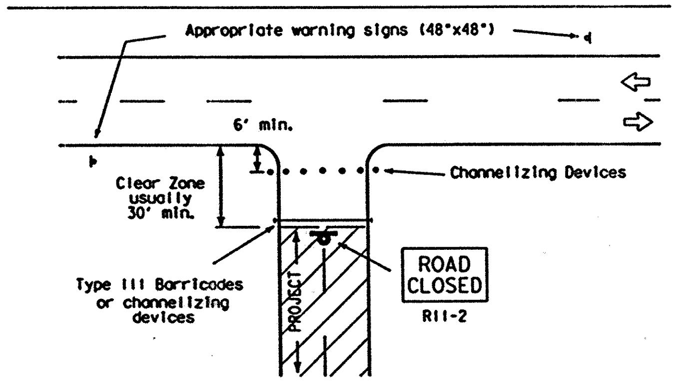

PROJECT LIMITS FOR CLOSED ROADWAY

Barricades shall be erected completely across roadway. Channelizing Devices may be drums, vertical panels or cones as specified in the plans.

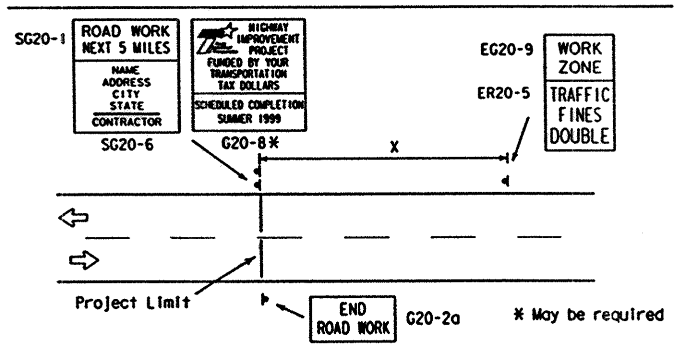

PROJECT LIMITS AWAY FROM WORK AREA

(Greater than 1 mile between project limits and work area)

CULVERT WIDENING OR OTHER ISOLATED WORK WITHIN THE PROJECT LIMITS

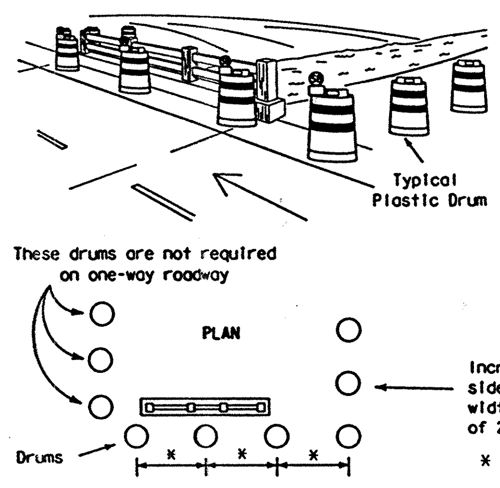

1). Where positive redirectional capability is provided, drums may be omitted.

2). Plastic construction fencing may be used with drums for safety as required in the plans.

3). Vertical Panel on flexible support may be substituted for drums when shoulder width is less than 4'.

4). When shoulder width is greater than 12', steady-burn lights may be omitted, if drums are used.

Increase number of plastic drums on side of approaching traffic if crown width makes it necessary. (minimum of 2 and maximum of 4 drums)

* Approx. 8' to 10' (maximum) spacing between drums.

CROSSROAD SIGNING AND BARRICADING

1. Except as noted elsewhere in plans, the usual minimum signing on a crossroad approach should be one CW20-1D ROAD WORK AHEAD sign and G20-2a END ROAD WORK sign. Where speeds and volumes are relatively low, a smaller ROAD WORK AHEAD sign may be used.
   When approved by the Engineer, on low volume crossroads, advance warning signs may be the reduced size 36" x 36" ROAD WORK AHEAD (CW20-1D) sign mounted back to back with the reduced size 24" x 18" END ROAD WORK (SG20-2a) sign. See the "STANDARD HIGHWAY SIGN DESIGNS for TEXAS" manual and BC(9) thru BC(9C) for sign design details. On low volume crossroads, advance signing may be omitted if approved by the Engineer.
   Additional signs such as FLAGGER AHEAD, LOOSE GRAVEL, or other appropriate signs may be required. When additional signs are required, such signs will be considered part of the minimum requirements.
2. The G20-1a sign shall be required on major crossroads to advise motorists of the length of construction in either direction from the intersection.
3. On higher volume crossroads additional traffic control devices may be noted elsewhere in the plans.
4. When work occurs in the intersection area, appropriate traffic control devices shall be in place.

WARNING LIGHTS

Warning lights shall meet the requirements of the "Texas Manual on Uniform Traffic Control Devices for Streets and Highways."

Flashing and Steady-Burn Warning Lights shall NOT be installed on barricades.

Type A-Low Intensity Flashing Warning Lights are commonly used with signs. They are intended to warn of an approaching potentially hazardous area. Their use shall be as indicated on this sheet and/or other sheets of the plans by the designation "(FL)".

Type-C Steady Burn Lights are intended to be used in a series for delineation to supplement other traffic control devices. Their use shall be as indicated on this sheet and/or other sheets of the plans by the designation "(SB)".

TYPICAL CONSTRUCTION WARNING SIGN SIZE AND SPACING [1,5,6]

Roadway Classification	Posted Speed	Sign Spacing "X" Δ	Long-term Or Intermediate-term Stationary Approach Warning Signs CW20 Series And CW22-1 Sign		Short-term Stationary Or Short Duration Approach Warning Signs CW21 Series		Other Warning Signs
	MPH	Feet (Apprx.)	Standard Inches	Minimum[4] Inches	Standard Inches[7]	Minimum[4] Inches[7]	Standard mm [7]
Conven.	30	120	48 x 48	36 x 36	30 x 30 or 36 x 36	24 x 24 or 30 x 30	30 x 30 or 26 x 36
↓	35	160 Δ	↓	↓	↓	↓	↓
↓	40	240	↓	Use Standard Size	↓	Use Standard Size	↓
↓	45	320	↓	↓	↓	↓	↓
↓	50	400	↓	↓	↓	↓	↓
↓	55	500[2]	↓	↓	↓	↓	↓
↓	60	600[2]	↓	↓	48 x 48	↓	48 x 48
↓	65	700[2]	↓	↓	↓	↓	↓
↓	70	800[2]	↓	↓	↓	↓	↓
Exp or Frwy	*	* [3]	↓	↓	**	**	**

* For typical sign spacings on expressways and freeways, see TMUTCD typical application diagrams or TCP Standard Sheets.

Δ Minimum distance from work area to 1st Advance Warning sign and/or distance between each additional sign.

** Smaller sign sizes may be used where sign designs have not been included in the "Standard Highway Sign Designs for Texas" manual.

General Notes:
1. Special or larger size signs may be used as may be necessary.
2. Distance between signs should be increased as required to have 1500 feet advance warning.
3. Distance between signs should be increased as required to have ½ mile or more advance warning.
4. For use only on secondary roads or city streets where speeds are low.
5. Only diamond shaped warning sign sizes are indicated.
6. See sign size listing in TMUTCD, Appendix A for complete list of all available sign design sizes.
7. Where two sizes are listed, see sign size listing in TMUTCD, Appendix A for proper size.

Only pre-qualified products shall be used. A list of compliant products and their sources may be obtained by writing or faxing:
Standards Engineer
Traffic Operations Division - TE
Texas Department of Transportation
125 East 11th Street
Austin, Texas 78701-2483
Phone (512) 416-3335
Fax (512) 416-3161
E-mail TRF-STANDARD@mailgw.dot.state.tx.us

STANDARD PLANS
TEXAS DEPARTMENT OF TRANSPORTATION
Traffic Operations Division

BARRICADE AND CONSTRUCTION STANDARDS

ADVANCE SIGNING
CROSSROAD SIGNING
WARNING LIGHTS

BC(1)-98

©TxDOT February 1998	DN: LR	CK: DTN	DW: DN	CK: GB	REG NO.:
REVISIONS	STATE DISTRICT: 22	FEDERAL REGION: 6	FEDERAL AID PROJECT: NH99(462)		SHEET: 230
	COUNTY: WEBB	CONTROL: 0018	SECTION: 06	JOB: 131	HIGHWAY: IH35

LEVELS DISPLAYED																DATE:
1	2	3	4	5	6	7	8	9	10	11	12	13	14	15	16	ACC:
17	18	19	20	21	22	23	24	25	26	27	28	29	30	31	32	FILE:
33	34	35	36	37	38	39	40	41	42	43	44	45	46	47	48	
49	50	51	52	53	54	55	56	57	58	59	60	61	62	63		

DN: DW: CK:

TYPE III BARRICADE (SKID)

GENERAL NOTES

FOR TYPE III BARRICADES

Type III Barricades are to be used at each end of construction projects closed to all traffic.

Barricades extending across a roadway should have stripes that slope downward in the direction toward which traffic must turn in detouring. When both right and left turns are provided for, the chevron striping may slope downward in both directions from the center of the barricade.

Striping of rails, for the right side of the roadway, should slope downward to the left. For the left side of the roadway, striping should slope to the right.

Identification markings may be shown only on back side of barricade rails. Maximum height of letters shall be 1 inch.

Barricades shall not be placed parallel to traffic unless an adequate clear zone is provided (see BC(1)).

Barricades shall be made using pre-qualified materials. A list of compliant products and their sources may be obtained by writing or faxing:

Standards Engineer
Traffic Operations Division - TE
Texas Department of Transportation
125 East 11th Street
Austin, Texas 78701-2483
Phone (512) 416-3335
Fax (512) 416-3161
E-mail TRF-STANDARD@mailgw.dot.state.tx.us

Barricades shall NOT be used as a sign support.

TYPICAL STRIPING DETAIL FOR BARRICADE RAIL

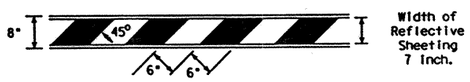

TYPICAL PANEL DETAIL FOR SKID OR POST TYPE BARRICADES

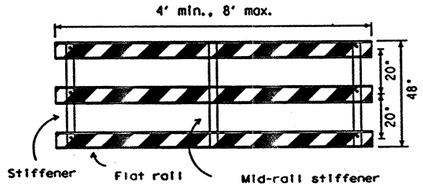

Stiffner may be inside or outside of support.

* For dimensions of components refer to TxDOT approved products list.

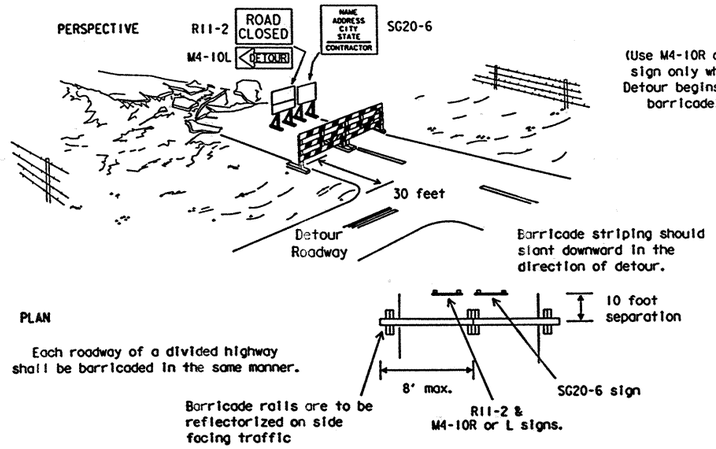

1). R11-2 and M4-10 signs should be mounted on independent supports at 7 foot mounting height in center of roadway.

2). Advance signing, including construction warning signs, and detour signing shall be as specified elsewhere in the plans.

PLASTIC/FIBERGLASS TYPE III BARRICADE OPTION

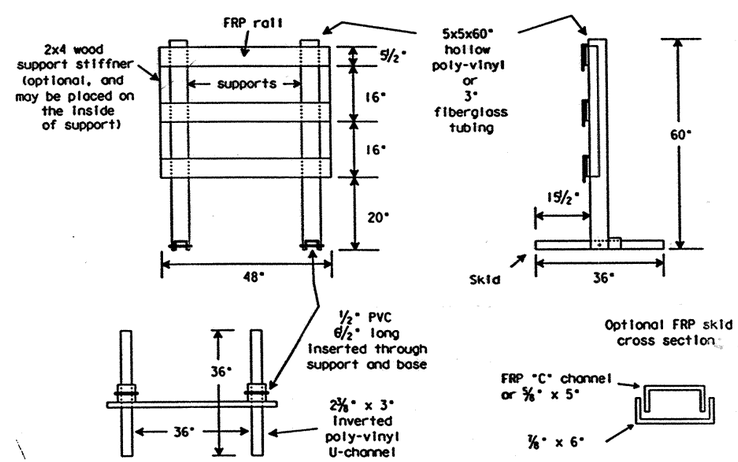

PERFORATED STEEL/WOOD/PLASTIC TYPE III BARRICADE OPTION

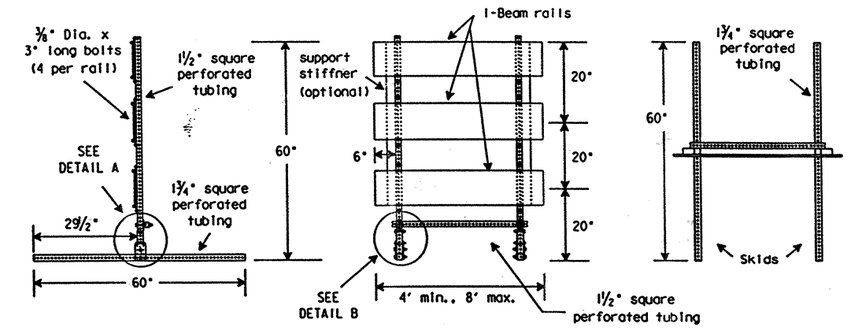

NOTE: If flat rails are used, refer to Wood/Plastic Option for vertical placement of rails

SPLICE PLATE

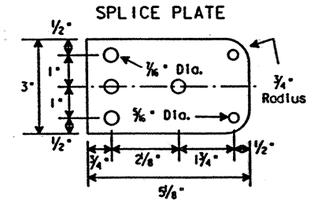

1½" PERFORATED SQUARE STEEL TUBE

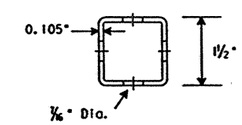

JOINING PLATE

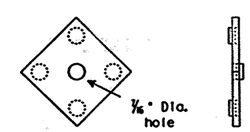

DETAIL A

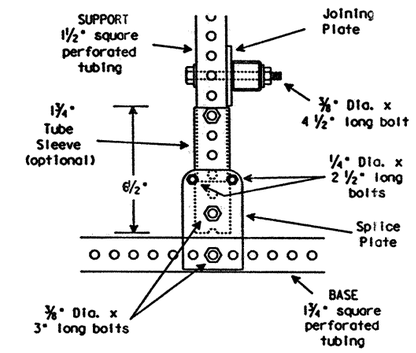

(Option: tube sleeve and base may be welded)

DETAIL B

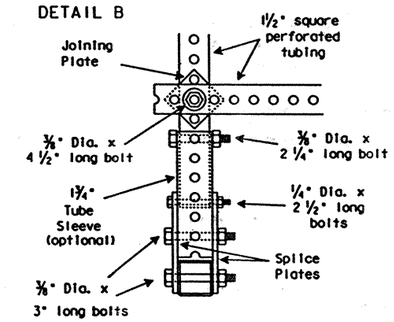

WOOD/PLASTIC TYPE III BARRICADE OPTION

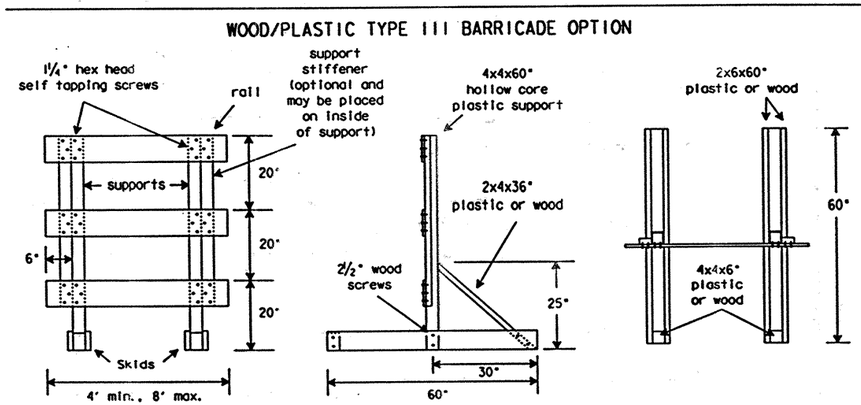

WOOD/PLASTIC/FIBERGLASS TYPE III BARRICADE OPTION

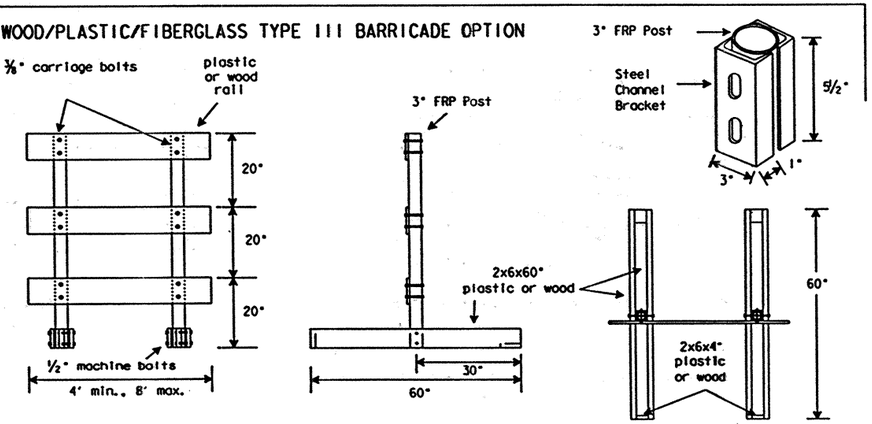

STANDARD PLANS
TEXAS DEPARTMENT OF TRANSPORTATION
Traffic Operations Division

BARRICADE AND CONSTRUCTION STANDARDS

BARRICADES (SKID MOUNT TYPE) **BC(2)-98**

©TxDOT February 1998	DN: LR	CK: DTN	DN: DN	CK: GB	FED. RD. NO.
REVISIONS	STATE DISTRICT	FEDERAL REGION	FEDERAL AID PROJECT		SHEET
	22	6	NH 99(462)		231
	COUNTY		CONTROL	SECTION	JOB	HIGHWAY
	WEBB		0018	06	131	IH35

DISCLAIMER
The use of this standard is governed by the "Texas Engineering Practice Act". No warranty of any kind is made by TxDOT for any purpose whatsoever. TxDOT assumes no responsibility for the conversion of this standard to other formats or for incorrect results or damages resulting from its use.

DATE:
ACC:
FILE:
DW:
CK:
LEVELS DISPLAYED

TYPE III BARRICADE (POST TYPE)

POZ-LOC
(Driveable)

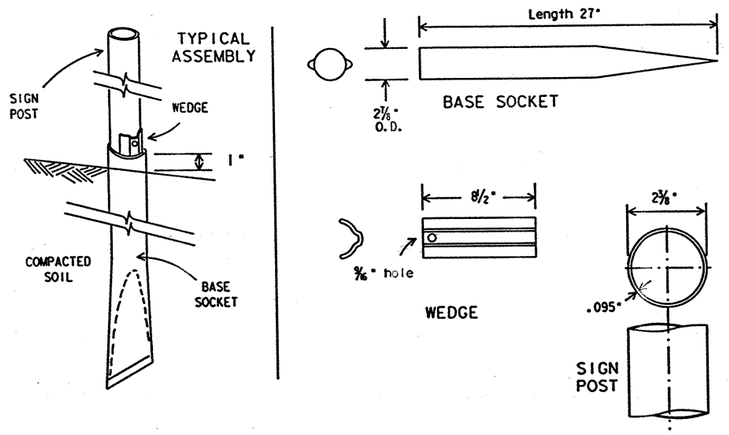

GENERAL NOTES FOR THIN WALL TUBE TYPE SIGN SUPPORT:

1. The BASE SOCKET is formed from 2⅞" O.D. x 12 gauge galvanized pipe.
2. The WEDGE is formed from 11 gauge steel galvanized per ASTM A525.
3. The SIGN POST is 2.375" O.D. x 0.095" thin wall steel tubing.
4. Steel Supports shall be made from new material and shall be corrosion resistant. Steel supports shall be galvanized in accordance with ASTM Designations A123 or A525 (G-90 or better).
5. Supports shall be straight within ¼" per 5 feet of length and shall have a smooth, uniform finish free from defects affecting strength or appearance. Any bolt holes and sheared ends shall be free from burrs. Bases of multisection supports shall not extend more than 5 inches above ground when installed.
6. Bolts, nuts, screws, washers and other miscellaneous hardware shall be galvanized in accordance to ASTM Designation: A153 Class C or D, or B695 Class 50.
7. Barricade supports systems used on this sheet may be suitable for only certain soil types. The contractor is responsible for selecting the appropriate support system for soil conditions on each project.

UNIVERSAL ANCHOR SYSTEM

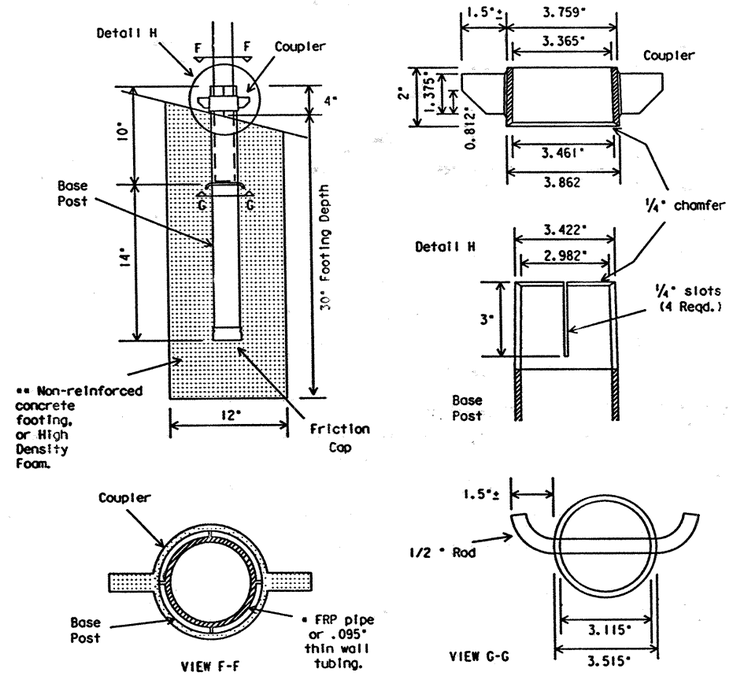

* Plastic insert must be used with ⅛" thin wall tubing.

** Footing shall be removed and backfilled when barricade is removed.

SQUARE TUBING

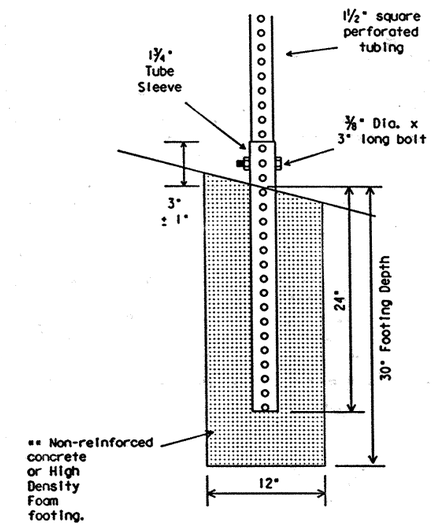

Barricades shall NOT be used as a sign support.

TYPE III BARRICADE (POST TYPE) TYPICAL APPLICATION

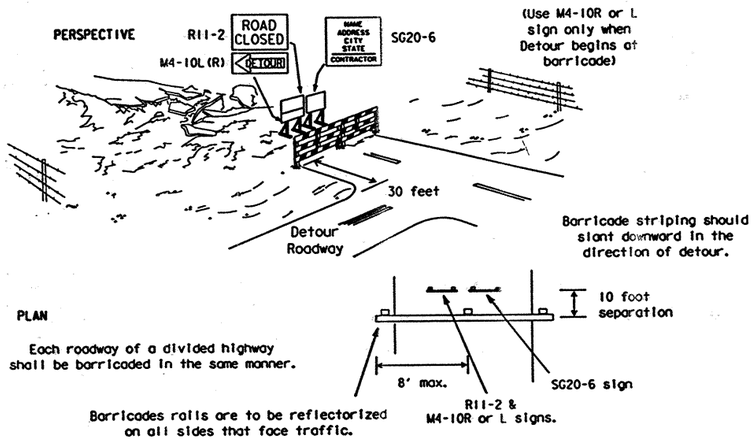

1). R11-2 and M4-10 signs should be mounted on independent supports at 7 foot mounting height in center of roadway.

2). Advance signing, including construction warning signs, and detour signing shall be as specified elsewhere in the plans.

TYPE III BARRICADE (POST)

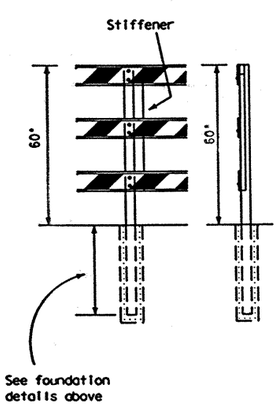

TYPICAL STRIPING DETAIL FOR BARRICADE RAIL

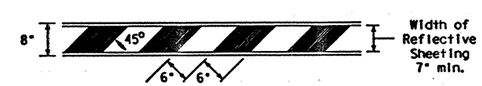

TYPICAL PANEL DETAIL FOR SKID OR POST TYPE BARRICADES

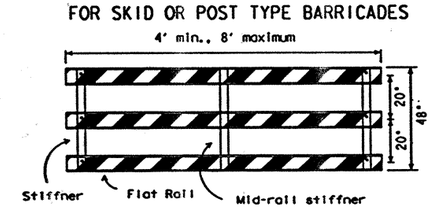

Stiffner may be inside or outside of support.

* For dimensions of components refer to TxDOT approved products list.

Barricades shall be made using pre-qualified materials. A list of compliant products and their sources may be obtained by writing or faxing:

Standards Engineer
Traffic Operations Division - TE
Texas Department of Transportation
125 East 11th Street
Austin, Texas 78701-2483
Phone (512) 416-3335
Fax (512) 416-3161
E-mail TRF-STANDARD@mailgw.dot.state.tx.us

STANDARD PLANS
TEXAS DEPARTMENT OF TRANSPORTATION
Traffic Operations Division

BARRICADE AND CONSTRUCTION STANDARDS

BARRICADES
(POST TYPE)

BC(3)-98

©TxDOT February 1998

DN: LR	CK: DTN	DW: DN	CK: GB	FED. RD. DIV.
REVISIONS	STATE DISTRICT: 22	FEDERAL REGION: 6	FEDERAL AID PROJECT: NH99(462)	SHEET: 232
COUNTY: WEBB	CONTROL: 0018	SECTION: 06	JOB: 131	HIGHWAY: IH35

DISCLAIMER
The use of this standard is governed by the "Texas Engineering Practice Act". No warranty of any kind is made by TxDOT for any purpose whatsoever. TxDOT assumes no responsibility for the conversion of this standard to other formats or for incorrect results or damages resulting from its use.

LEVELS DISPLAYED
DATE:
ACC:
FILE:
DW:
CK:

DISCLAIMER
The use of this standard is governed by the "Texas Engineering Practice Act". No warranty of any kind is made by TxDOT for any purpose whatsoever. TxDOT assumes no responsibility for the conversion of this standard to other formats or for incorrect results or damages resulting from its use.

GENERAL NOTES:

1. Sign Supports detailed on this sheet have been crash tested and are approved breakaway systems. TxDOT acceptance of these breakaway systems does not cover the structural features of the sign support systems.
2. Sign support systems approved by FHWA may be used as approved fixed sign supports. The contractor shall provide documentation from FHWA approving sign support systems not shown on this sheet.
3. Sign support systems listed on this sheet may be suitable for only certain soil types. The contractor is responsible for selecting appropriate sign support systems for soil conditions on each project.
4. Barricades shall NOT be used as sign supports.

WORK ZONE SIGNS

GENERAL

Standard signs shall be used as required by the BC Standard sheets, the plans, or as directed by the Engineer to regulate, warn, and guide traffic. All sign usage and erection shall be in strict accordance with the "Texas Manual on Uniform Traffic Control Devices for Streets and Highways" (TMUTCD). The Contractor shall maintain each sign as directed by the Engineer.

The Contractor may use either the sign designs shown on the BC Standard Sheets, or those sign designs shown in the "Standard Highway Sign Designs for Texas" (SHSD). All work zone signs provided for in the TMUTCD but not detailed in the plans may be used when directed by the Engineer.

SIZE OF SIGNS

On secondary roads or city streets where speeds are low, smaller size construction warning signs may be used with the written approval of the Engineer and if the sign size is in accordance with the "Typical Construction Warning Sign Size and Spacing Chart" shown on page 6C-11 of the TMUTCD, Part VI.

SPLICES

All wooden sign panels fabricated from 2 or more pieces shall have one or more plywood cleats, 1/2 inch thick by 6 inches wide, fastened to the back of the sign and extending fully across the sign.

Wood Sign posts shall not be spliced.

REFLECTIVE SHEETING

Reflectorized signs shall be constructed of retroreflective sheeting meeting the color and reflectivity requirements of Material Specification D-9-8300 or D-9-8310. Day only is defined as a device that is used only during daylight hours.

Type A, B or C sheeting may be used for all day only applications. Type A sheeting should be used for all white background regulatory signs. Type C sheeting shall be used for all other applications.

The above applications of sheeting grades to different type signs will apply unless otherwise specified in the plans.

TYPE A = Engineer Grade, TYPE B = Super Engineer Grade, TYPE C = High Specific Intensity

SIGN LETTERS

All sign lettering shall be clear, open rounded type capital letters as approved by and as published by the Federal Highway Administration (FHWA). Signs and lettering shall be of first class workmanship equivalent to that of the Department standard signs.

WORK DURATION TERMINOLOGY-(as defined by the "Texas Manual on Uniform Traffic Control Devices")

Long-term Stationary = occupies a location 3 or more days;
Intermediate-term Stationary = occupies a location from overnight to 3 days;
Short-term Stationary = daylight work that occupies a location from 1 to 12 hours;
Short Duration = occupies a location up to 1 hour.

SUPPORTS AND MOUNTING HEIGHT

The bottom of Long-term / Intermediate-term signs shall be at least 7 feet above the paved surface. The bottom of any supplementary plaques shall be at least 6 feet above the paved surface.

The bottom of Short-term / Short Duration signs shall be a minimum of 1 foot above the pavement surface but no more than 2 feet above the ground. Long-term / Intermediate-term Signs may be used in lieu of Short-term / Short Duration signing. Short-term / Short Durations signs shall be used only during daylight and removed at the end of the workday.

Regulatory signs shall be mounted at least 7 feet above the paved surface regardless of work duration.

Wood sign supports shall be painted white.

SIGN SUPPORT WEIGHTS

Where sign supports require the use of weights to keep from turning over, the use of some type of sandbag is recommended. The use of pieces of rock, concrete, iron, steel or other solid objects will not be permitted.

Sandbags shall only be placed along or upon the base supports of the device and shall not be suspended above ground level or hung with rope, wire, chains or other fasteners.

REMOVING OR COVERING

When sign messages may be confusing or no longer apply, the signs shall be removed or completely covered. When signs are covered the material used shall be opaque, such as heavy mil black plastic. Burlap shall not be used to cover signs. Signs shall be removed upon completion of the work.

Duct tape or other adhesive material shall not be affixed to sign face.

Only pre-qualified products shall be used. A list of compliant products and their sources may be obtained by writing or faxing:

Standards Engineer
Traffic Operations Division - TE
Texas Department of Transportation
125 East 11th Street
Austin, Texas 78701-2483
Phone (512) 416-3335
Fax (512) 416-3161
E-mail TRF-STANDARD@mailgw.dot.state.tx.us

LONG/INTERMEDIATE TERM STATIONARY PORTABLE SIGN SUPPORTS

7 Foot Mounting Height

(SKID MOUNTED)

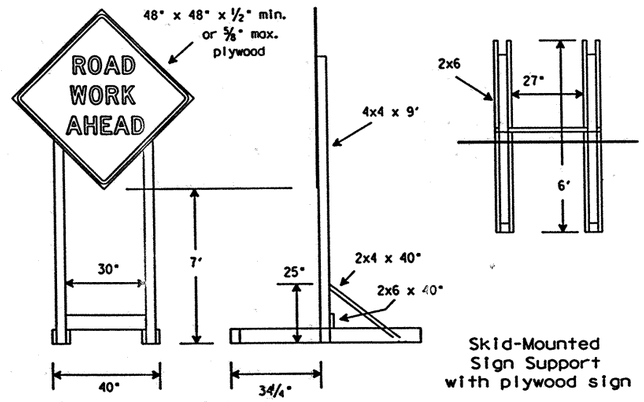

Skid-Mounted Sign Support with plywood sign

(POST TYPE)

Refer to acceptable products list.

WHEELED PORTABLE SIGN SUPPORT

with plywood sign
(Minimum thickness 1/2 inch)
TxDOT Design

SHORT TERM STATIONARY/SHORT DURATION PORTABLE SIGN SUPPORTS

1 Foot Mounting Height

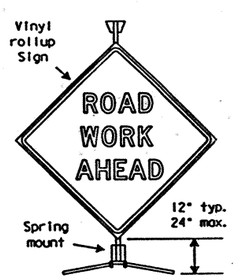

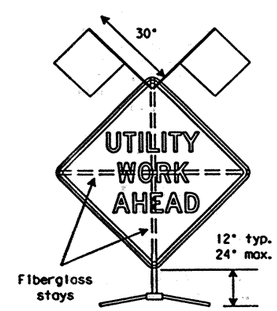

TYPICAL FLASHING ARROW PANEL

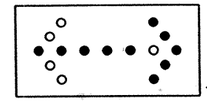

For traffic to move right.

ATTENTION: Arrow panels shall be equipped with automatic dimming devices.

1. The Advance Warning Flashing Arrow Panel should be used for all lane closures (multilane roadway), or slow moving maintenance or construction activities on the traveled way. Arrow panels should not be used on two-lane roadways, detours, diversions or work on shoulders unless the CAUTION mode is used.
2. Necessary signs, barricades or other traffic control devices should be used in conjunction with the Advance Warning Arrow Panel.
3. The Arrow panel should have the capability of the following display selections: LEFT ARROW, RIGHT ARROW, LEFT and RIGHT ARROW and CAUTION. The CAUTION mode consists of four corner lamps flashing simultaneously.
4. The Arrow panel shall be capable of minimum 50 percent dimming from rated lamp voltage. The flashing rate of the lamps shall not be less than 25 times per minute nor more than 40 flashes per minute. The Advance Warning Flashing Arrow Panel shall be mounted on a vehicle, trailer or other suitable support.
5. Minimum lamp "on time" shall be approximately 50 percent for the flashing arrow and 25 percent for the sequential chevron.
6. The TxDOT standard is the flashing arrow, however, the sequential chevron may be used during daylight operations. The sequential arrow should NOT be used.

REQUIREMENTS TYPE	MINIMUM SIZE	MIN. NUMBER OF PANEL LAMPS	MIN. VISIBILITY DISTANCE
B	30" x 60"	13	3/4 mile
C	48" x 96"	15	1 mile

TYPICAL MINIMUM CLEARANCES FOR LONG/INTERMEDIATE TERM SIGNS

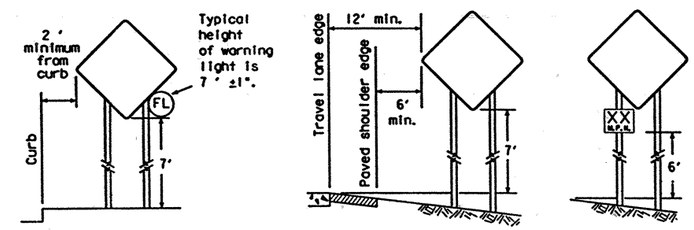

It is the intent of these plans to provide positive guidance to motorists throughout the project limits by the use of signs, pavement markings, delineation devices and/or channelizing devices. All traffic control devices shall conform with the "Texas Manual on Uniform Traffic Control Devices for Streets and Highways."

WOOD POST SYSTEM FOR FIXED SIGN SUPPORTS

Nominal Post Size	No. of Posts	Maximum Sq. feet of Sign Face	Minimum Soil Embedment	Drilled Hole(s) Required
4 x 4	1	12	36"	no
4 x 4	2	21	36"	no
4 x 6	1	21	36	YES

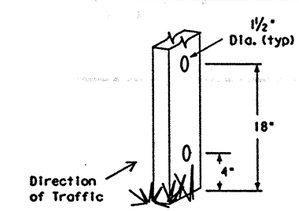

STANDARD PLANS
TEXAS DEPARTMENT OF TRANSPORTATION
Traffic Operations Division

BARRICADE AND CONSTRUCTION STANDARDS

SIGN SUPPORTS

BC(4)-98

©TxDOT February 1998 DN-LR CK-DTN DW-DN CK-GB

REVISIONS	STATE DISTRICT	FEDERAL REGION	FEDERAL AID PROJECT			SHEET
	22	6	NH99(462)			233
	COUNTY		CONTROL	SECTION	JOB	HIGHWAY
	WEBB		0018	06	131	IH35

LEVELS DISPLAYED 1 2 3 4 5 6 7 8 9 10 11 12 13 14 15 16 17 18 19 20 21 22 23 24 25 26 27 28 29 30 31 32 33 34 35 36 37 38 39 40 41 42 43 44 45 46 47 48 49 50 51 52 53 54 55 56 57 58 59 60 61 62 63

DATE: ACC: FILE:

DGN DWN CK

DISCLAIMER
The use of this standard is governed by the "Texas Engineering Practice Act". No warranty of any kind is made by TxDOT for any purpose whatsoever. TxDOT assumes no responsibility for the conversion of this standard to other formats or for incorrect results or damages resulting from its use.

GENERAL NOTES

Drums and all related items shall comply with the requirements of the current version of the "Texas Manual on Uniform Traffic Control Devices" (TMUTCD).

Only pre-qualified products shall be used. A list of compliant products and their sources may be obtained by writing or faxing:

Standards Engineer
Traffic Operations Division - TE
Texas Department of Transportation
125 East 11th Street
Austin, Texas 78701-2483
Phone (512) 416-3335
Fax (512) 416-3161
E-mail TRF-STANDARD@mailgw.dot.state.tx.us

Drums, bases, and related materials shall exhibit good workmanship and shall be free from objectionable marks or defects which would adversely affect their appearance or serviceability.

After drums and other traffic control devices are placed, the work zone should be driven through both during the day and after dark to be certain that these devices are functioning as intended.

PLASTIC DRUM - Prequalified plastic drums shall meet the following requirements.

GENERAL DESIGN REQUIREMENTS

Plastic drums shall be of a two-piece design; the "body" of the drum shall be the top portion of the drum and the "base" shall be the bottom of the drum.

The body and base shall lock together in such a manner that the body separates from the base when impacted by a vehicle traveling at a speed of 35 km/h or greater but prevents accidental separation due to normal handling and/or air turbulence created by passing vehicles. Plastic drums that have been in use for more than two years generally do not have enough locking strength to prevent accidental separation. Plastic drums identified for replacement by the project engineer, inspector or their designee shall be replaced within 24 hours with an approved device.

Plastic drums shall be constructed of lightweight flexible, and deformable materials. Use of metal drums or single piece plastic drums as channelization devices or sign supports shall not be allowed.

Drums shall present a profile that is a minimum of 18 inches in width at the 36 inches height when viewed from any direction. The height of drum unit (body installed on base) shall be a minimum of 36 inches and a maximum of 42 inches.

Drums shall be tapered to allow nesting of a minimum of 5 drum bodies for ease in transport.

The top of drum shall have a built-in handle for easy pickup and shall be designed to drain water and not collect debris. The handle shall have a minimum of two widely spaced 14mm diameter holes to allow attachment of a warning light, delineator reflector unit or sign.

The exterior of the drum body shall have a minimum of four alternating orange and white retroreflective circumferential stripes not less than 4 inches in width nor greater than 8 inches. Any non-reflectorized space between any two adjacent stripes shall not exceed 2 inches in width.

Bases shall have a maximum width of 36 inches, a maximum height of 4 inches, and a minimum of two footholds of sufficient size to allow base to be held down while separating the drum body from the base.

Plastic drums shall be constructed of ultra-violet stabilized, orange, high-density polyethylene (HDPE) or other approved material.

Drum body shall have a minimum unballasted weight of 7.7 lbs. and maximum unballasted weight of 11 lbs. The wall of the drum body shall be a minimum of 0.07 inch in thickness. Weight of any drum supplied shall not vary more than 0.5 lb. from that of the prequalified sample.

Drum and base shall be marked with manufacture's name, model number, and year and month of construction.

RETROREFLECTIVE SHEETING

The retroreflective stripes used on drums shall be constructed of retroreflective sheeting meeting the color and reflectivity requirements of Departmental Materials Specification D-9-8300: Flat Surface Reflective Sheeting, Type C unless otherwise specified in the plans.

Drums used only during daylight hours may use any type of sheeting meeting the color and retroreflective color requirements of Departmental Materials Specification D-9-8300.

The sheeting shall be suitable for use on and shall adhere to the drum surface such that, upon vehicular impact, the sheeting shall remain adhered in-place and exhibit no delaminating, checking, cracking, or loss of reflectivity other than that loss due to abrasion of the sheeting surface.

BALLAST

Unballasted bases shall be large enough to hold up to 50 lbs. of sand. Bases with built-in ballast shall weigh between 40 lbs. and 50 lbs.

The ballasted base should weigh between 35 (minimum) and 75 lbs. (maximum). The ballast may be sand in one to three sand bags separate from the base, sand in a sand-filled plastic base, a integral crumb rubber base and ballast or other ballasting devices as approved by the Engineer. Stacking of sand bags will be allowed, however height of sand bags above pavement surface may not exceed 12 inches.

The ballasts shall not be heavy objects, water, or any material that would become hazardous to motorists, pedestrians, or workers when the drum is struck by a vehicle. When used in regions susceptible to freezing, drums shall have drainage holes in the bottoms so that water will not collect and freeze becoming a hazard when struck by a vehicle. Ballast shall not be placed on top of drums

Adhesives may be used to secure base of drums to pavement.

SIGNS, CHEVRONS, AND VERTICAL PANELS

Signs used on plastic drums shall be manufactured using substrates listed on the Compliant Products List.

Chevrons and other work zone signs with an orange background shall be manufactured with Type C (high intensity grade) retroreflective sheeting meeting the color and reflectivity requirements of "Departmental Materials Specification D-9-8300: Flat Surface Reflective Sheeting, Type C" unless otherwise specified in the plans.

Signs with white backgrounds, such as the KEEP RIGHT sign (R4-8 series), shall be manufactured with Type A (engineer grade) sheeting.

Approved sign messages for signs mounted on plastic drums are the Chevron (CW1-8), the KEEP RIGHT/LEFT sign (R4-7 or R4-8 series), the Vertical Panel, and the Opposing Lane Divider. Other sign messages (text or symbolic) may be used as approved by the Engineer. Sign dimensions shall not exceed 18 inches in width or 24 inches in height. Refer to acceptable materials list for approved substrate materials. Diagonal stripes on Vertical Panels shall slope down toward the intended traveled way.

Signs shall be installed using one 1/2 inch bolt (nominal) and nut, two washers, and one locking washer for each connection. Mounting bolts and nuts shall be fully engaged and adequately torqued. Bolts should not extend more than ½" beyond nuts. The hardware used for the mounting of signs onto plastic drums shall be of adequate quality for this use.

WARNING LIGHTS, WARNING REFLECTORS, AND DELINEATORS

Type A flashing warning lights are intended to warn drivers that they are approaching or are in a potentially hazardous area. Type A flashing warning lights are not intended for delineation and shall not be used in a series.

Type B warning lights shall not be attached to a drum.

Type C steady-burn warning lights are intended to be used in a series to delineate the edge of the traveled way on detours, on lane changes, on lane closures, and on other similar conditions. Type A and Type C warning lights shall be installed at locations as detailed on other sheets in the plans.

A warning reflector or approved substitute may be mounted on a plastic drum as a substitute for a Type C, Steady Burn Warning Light at the discretion of the contractor unless otherwise noted in the plans. The warning reflector shall be manufactured from a sign substrate from the approved list for use on plastic drums. The warning reflector shall have a retroreflective surface area (one-side) no less than 30 square inches.

The side of the warning reflector facing approaching traffic shall be fully reflectorized using retroreflective sheeting meeting the color and reflectivity requirements for ASTM Type 4 retroreflective sheeting as described in ASTM Design Standard 4956-93B. When used near two-way traffic, both sides of the warning reflector shall be fully reflectorized. The warning reflector should be mounted on the side of the handle that faces approaching traffic so that the maximum amount of reflective sheeting is visible to traffic approaching in the adjacent lane. Delineators may be used as directed by the Engineer. Delineators may not be used to substitute for warning lights. Warning lights shall not be installed on a drum that has a sign, chevron or vertical panel.

Type(A) Class(1), Type(A) Class(2), or Type(B) Reflector Units (D & OM Standard) may be attached to drums to delineate the intended vehicular path. The color of the reflector unit shall correspond to the marking it is supplementing or for which it is substituting. The reflective unit shall be attached to the handle of the drum using the mounting hole nearest the traveled way and shall be aligned perpendicular to approaching traffic.

Contractor shall provide, on request from project engineer, a letter from the drum manfacturer certifing the plastic drum model number, the year and month of construction and that it meets the specifications on this standard sheet.

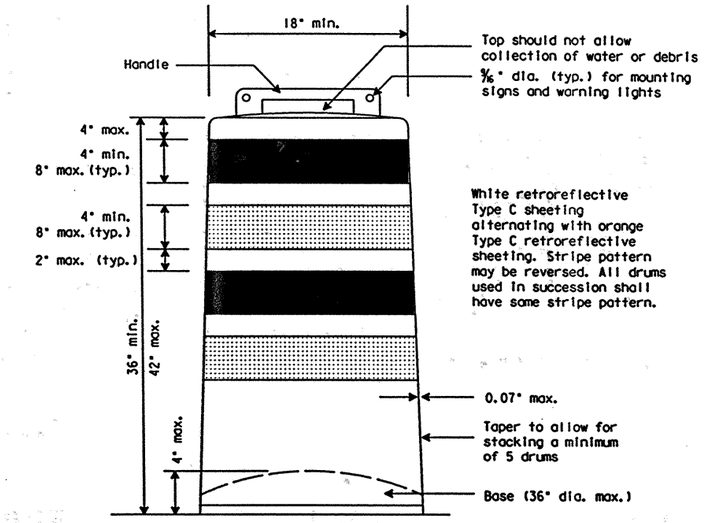

Color sequence of reflective sheeting may be reversed.

TYPICAL LANE CLOSURE

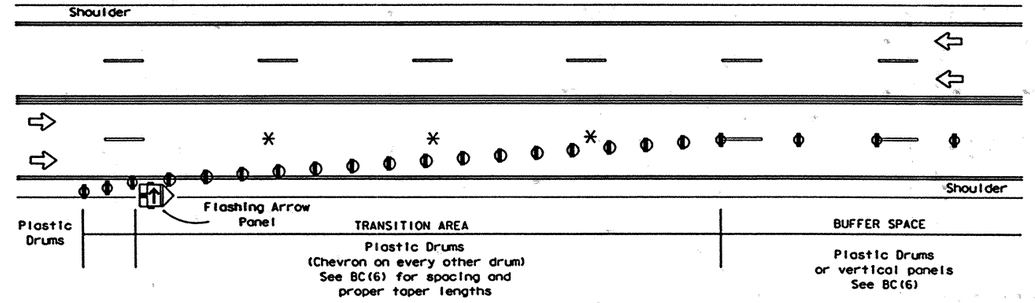

✳ NOTE: For Long Term Stationary Duration - Lane lines shall be removed.

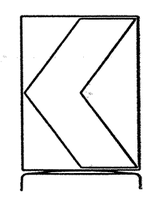

18" x 24" Sign
(Maximum Sign Dimension)
Chevron CW1-8,
Driveway sign D70a,
Keep Right R4 series
or other sign as approved
by Engineer

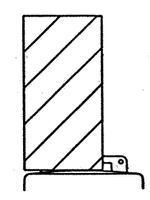

12" x 24" Vertical Panel
mount with diagonals
sloping down towards
travel way

Warning Light or approved substitute
mount towards travel way

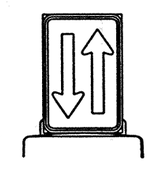

12" x 18" Sign
Opposing Lane Divider

STANDARD PLANS
TEXAS DEPARTMENT OF TRANSPORTATION
Traffic Operations Division

BARRICADE AND CONSTRUCTION STANDARDS

PLASTIC DRUMS — BC(5)-98

©TxDOT February 1998	DN-LR	CK-DTN	DW-DN	CK-DM	REG NO.-
REVISIONS 4-98	STATE DISTRICT 22	FEDERAL REGION 6	FEDERAL AID PROJECT NH 99(462)		SHEET 234
	COUNTY WEBB	CONTROL 0018	SECTION 06	JOB 131	HIGHWAY IH35

LEVELS DISPLAYED
DATE:
ACC:
FILE:
DW:
CK:

DISCLAIMER
The use of this standard is governed by the "Texas Engineering Practice Act". No warranty of any kind is made by TxDOT for any purpose whatsoever. TxDOT assumes no responsibility for the conversion of this standard to other formats or for incorrect results or damages resulting from its use.

GENERAL NOTES:

SELF-RIGHTING SUPPORTS

1. Channelizing devices on self-righting supports may be a vertical panel, opposing lane divider or chevron.
2. Channelizing devices on self-righting supports shall be used at locations detailed elsewhere in the plans. These devices shall conform to the "Texas Manual on Uniform Traffic Control Devices". Type of base will be as directed by the Engineer.
3. Channelizing devices on self-righting supports should be used in work zone areas where channelizing devices are frequently impacted by errant vehicles. Work Zone channelizing devices illustrated on this sheet may be installed in close proximity to traffic and are suitable for use on high or low speed roadways. Devices should not be placed within 12 inches of the traveled way. Spacing and placement shall be uniform and in accordance with the "Texas MUTCD".
4. The contractor shall maintain devices in a clean condition and replace damaged, non-reflective, faded, or broken devices and bases as necessary.
5. Devices shall be erected by method shown on this sheet and as approved by the Engineer.
6. Portable bases shall be fabricated from virgin and/or recycled rubber. Approximate weight of portable bases shall be 35 lbs.
7. Pavement surfaces shall be prepared in a manner that will ensure proper bonding of adhesives and fixed mount bases to the pavement surfaces when required. Adhesives shall be prepared and applied as per manufacturers recommendations.
8. Application and removal of devices shall not cause detrimental effects to the final pavement surfaces, including pavement surface discoloration or surface intregity. Driveable bases shall not be permitted on final pavement surfaces. All application and removal procedures of fixed bases shall be approved by the Engineer.
9. These devices shall not be paid for directly but shall be considered subsidiary to the item "Barricades, Signs, and Traffic Handling."

CONES

1. Traffic cones and tubular markers shall be a minimum of 28 inches in height when used on freeways or used at nighttime. Orange shall be the predominant color of cones and tubular markers. They should be kept clean and bright for maximum visibility. Cones shall have a minimum weight of 9/2 lbs.
2. For nighttime use, cones shall be reflectorized. Reflectorized material shall have a smooth, sealed outer surface which will display the same approximate color day and night. When used at night, appropriate personnel shall be present at all times to ensure cones and tubular markers remain in their proper location and in an upright position.
3. Reflectorization of cones shall be a minimum 6 inch band placed at least 3 inches but not more than 4 inches from the top, supplemented by a minimum 4 inch band spaced a minimum of 2 inches below the 6 inch band. Reflectorization of tubular markers shall be a minimum of two 3 inch bands placed a maximum of 2 inches from the top with a maximum of 6 inches between bands.
4. One-piece cones or tubular markers are generally suitable for temporary usage (up to 8 hours) with other channelization devices such as vertical panels, drums or two-piece cones for long term usage. Care should be taken to ensure that they remain in their proper location and in an upright position.
5. *-SPRAF (stacking/placement/removal assistance feature) may be designed as a handle, hook or other shape, fabricated from non-rigid materials similar to the cone material, and may extend up to a maximum of 8 inches above the top of cone. The length of the SPRAF shall not be considered with regard to the 28 inch minimum height.

DRUMS

Refer to BC(5).

SPECIFICATION REFERENCE TABLE
MATERIALS AND TEST SPECIFICATIONS (D-9)

FLAT SURFACE REFLECTIVE SHEETING, TYPE C
(HIGH SPECIFIC INTENSITY) D-9-8300

Only pre-qualified products shall be used. A List of compliant products and their sources may be obtained by writing, calling or faxing:

Standards Engineer
Traffic Operations Division - TE
Texas Department of Transportation (TxDOT)
125 East 11th Street
Austin, Texas 78701-2483
Phone (512) 416-3335
Fax (512) 416-3161
E-mail TRF-STANDARD @ mailgw.dot.state.tx.us

Posted Speed *	Formula	Minimum Desirable Taper Lengths ** 10' Offset	11' Offset	12' Offset	Suggested Maximum Spacing of Device On a Taper	On a Tangent	Minimum Sign Spacing X Distance
30	$L = \frac{WS^2}{60}$	150'	165'	180'	30'	60'-75'	120'
35		205'	225'	245'	35'	70'-90'	160'
40		265'	295'	320'	40'	80'-100'	240'
45	L=WS	450'	495'	540'	45'	90'-110'	320'
50		500'	550'	600'	50'	100'-125'	400'
55		550'	605'	660'	55'	110'-140'	500'
60		600'	660'	720'	60'	120'-150'	*600'
65		650'	715'	780'	65'	130'-165'	*700'
70		700'	770'	840'	70'	140'-175'	*800'

* Conventional Roads Only

** Taper lengths have been rounded off.
L=Length of Taper (FT.) W=Width of Offset (FT.) S=Posted Speed (MPH)

DRIVEABLE RIGID VERTICAL PANEL

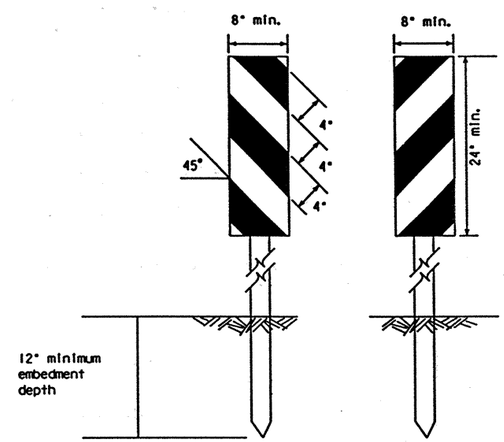

See Compliant Products List for supports and panel substrates

CONES

Cones shall have a minimum weight of 9/2 lbs.

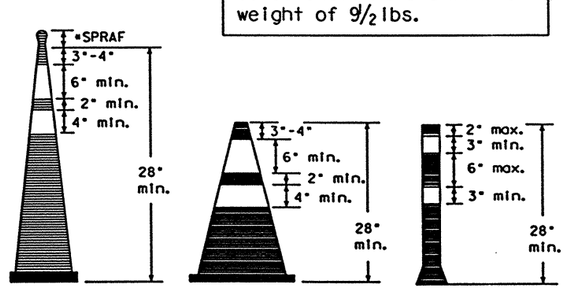

SELF-RIGHTING SUPPORTS

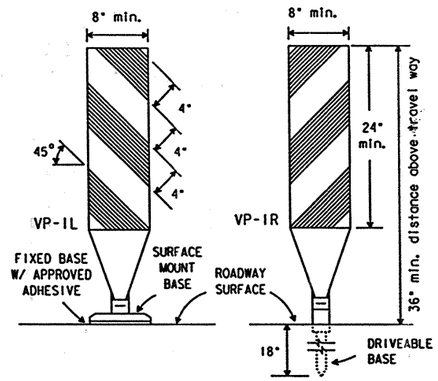

VERTICAL PANELS

Vertical Panels are normally used as channelizing devices to indicate tangent or nearly tangent roadway alignment where good target value of a device is needed in daytime as well as nighttime. In addition, vertical panels should be used at the edge of shoulder drop-offs and other areas such as lane transitions where positive daytime and nighttime delineation may be required. Vertical panels should be mounted back to back if used at the edge of cuts adjacent to two-way two lane roadways. Stripes are to be reflective orange and reflective white and should always slope downward toward the traveled way. Vertical Panels used on expressways, freeways, and other high speed roadways shall have a minimum of 2 square feet of retroreflective area facing traffic.

Self-righting supports are available with portable base. See Compliant Products List.

OPPOSING LANE DIVIDER

with Portable or Fixed Base Support

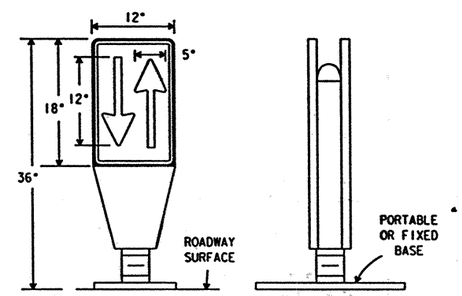

REFLECTIVE ORANGE BACKGROUND WITH BLACK ARROWS AND BORDER.

CHEVRON

with Flexible Support

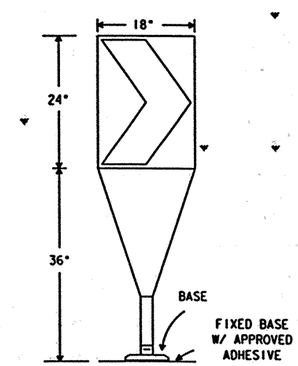

DRIVEABLE BASE

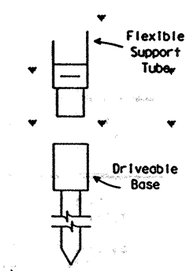

Driveable Support for Vertical Panel VP(F)-1 or Chevron CW1-8(F).

PORTABLE RIGID VERTICAL PANEL

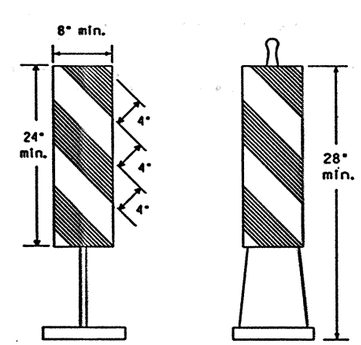

See Compliant Products List for alternate designs.

STANDARD PLANS
TEXAS DEPARTMENT OF TRANSPORTATION
Traffic Operations Division

BARRICADE AND CONSTRUCTION STANDARDS

CHANNELIZING DEVICES
CONES

BC(6)-98

©TxDOT February 1998	DN: LR	CK: DTN	DW: DN	CK: GB	FED. RD. DIV.
REVISIONS	STATE DISTRICT 22	FEDERAL REGION 6	FEDERAL AID PROJECT NH 99 (462)		SHEET 235
	COUNTY WEBB	CONTROL 0018	SECTION 06	JOB 131	HIGHWAY IH35

LEVELS DISPLAYED 1 2 3 4 5 6 7 8 9 10 11 12 13 14 15 16 17 18 19 20 21 22 23 24 25 26 27 28 29 30 31 32 33 34 35 36 37 38 39 40 41 42 43 44 45 46 47 48 49 50 51 52 53 54 55 56 57 58 59 60 61 62 63
DATE: ACC: FILE: DW: CK:

DISCLAIMER
The use of this standard is governed by the "Texas Engineering Practice Act". No warranty of any kind is made by TxDOT for any purpose whatsoever. TxDOT assumes no responsibility for the conversion of this standard to other formats or for incorrect results or damages resulting from its use.

WORK ZONE PAVEMENT MARKINGS

GENERAL

The Contractor shall be responsible for maintaining work zone and existing pavement markings on all roadways open to traffic within the projects limits unless otherwise stated in the plans. Color, patterns, and dimensions shall be in conformance with the Texas Manual on Uniform Traffic Control Devices (TMUTCD). Additional supplemental pavement marking details may be found in the plans or specifications.

Work zone pavement markings shall consist of guidemarks, short term markings and/or standard pavement markings. Unless otherwise shown in the plans, materials used for work zone pavement markings shall be thermoplastic, raised pavement markers, prefabricated pavement marking material, temporary flexible-reflective roadway marker tabs or other materials approved by the Engineer. Thermoplastic shall not be used for removable markings.

All roadways to be opened to traffic shall be marked with short term markings or standard markings as shown in the plans, at the end of each day's operation. Unless otherwise shown in the plans or approved in writing by the Engineer, all concrete surfaces shall have standard markings in place prior to opening to traffic.

Standard pavement markings shall be installed in accordance with the Texas Manual on Uniform Traffic Control Devices (TMUTCD) and as shown on the plans. When short term markings are required on the plans, short term markings shall conform with the TMUTCD, the plans and details as shown on the Standard WZ(STPM).

All asphaltic surfaces which are to be opened to traffic shall be marked with guidemarks immediately following placement and final rolling of any course. Guidemarks shall consist of a single temporary flexible-reflective roadway marker tab or a single temporary construction raised pavement marker at 40 foot spacing.

Guidemarks shall be placed in proper alignment with the final location of future pavement markings. Any guidemarks not in alignment with pavement markings shall be removed by the Contractor at the Contractor's expense. Guidemarks shall not be used to simulate edgelines.

When inclement weather prohibits the application of short term markings or standard markings as called for on the plans, upon approval of the Engineer, guidemarks may be considered as temporary short term markings for asphaltic surfaces. The placement of pavement markings as shown on the plans may be delayed until such time that weather permits application of pavement markings.

When standard pavement markings are not in place and the roadway is opened to traffic, DO NOT PASS signs shall be erected to mark the beginning of the sections where passing is prohibited and PASS WITH CARE signs shall be erected to mark the beginning of the sections where passing is permitted.

RAISED PAVEMENT MARKERS

Raised pavement markers are to be placed according to the patterns on BC(8). Raised pavement markers used as standard pavement markings or to supplement removable markings shall meet the requirements of item "RAISED PAVEMENT MARKERS".

Unless otherwise shown on the plans, raised pavement markers will not be allowed for words, symbols, and shapes, diagonal or transverse lines.

PREFABRICATED PAVEMENT MARKINGS

Removable prefabricated pavement markings shall be a material of manufacture and product code or designation shown on the list of approved materials covered by the Department Materials Specification D-9-8241.

Non-removable prefabricated pavement markings (foil back) shall be a material of manufacture and product code or designation shown on the list of approved materials covered by the Specification TxDOT 550-74-01.

The lists of approved prefabricated work zone pavement marking materials may be obtained from TxDOT General Services Division.

MAINTENANCE

The Contractor will be responsible for maintaining work zone pavement markings within the project limits. Work Zone Pavement Markings shall be inspected in accordance with the frequency and reporting requirements of work zone traffic control device inspections. The markings should provide a visible reference for a minimum distance of 300 feet during normal daylight hours and 165 feet when illuminated by automobile low-beam headlights at night, unless sight distance is restricted by roadway geometrics. Markings failing to meet this criteria shall be replaced as required by the Engineer.

REMOVAL OF PAVEMENT MARKINGS

Removal of pavement markings includes centerline, channelizing lines, lane lines, edge lines, words, arrows, symbols and raised pavement markers.

Pavement markings that are no longer applicable and which may create confusion or direct a motorist toward or into the closed portion of the roadway, shall be removed or obliterated before the roadway is open to traffic. The above shall not apply to detours of a short duration of a few hours, where flaggers and/or sufficient channelizing devices are used in lieu of markings to outline the detour route and the detour is not to be maintained during nighttime.

Pavement markings shall be removed to the fullest extent possible, so as not to leave a discernible marking, by any method that does not materially damage the surface or texture of the pavement. The removal of pavement markings may require resurfacing or seal coating portions of the roadway, normally full lane widths. Subject to the approval of the Engineer, any method that proves to be successful on a particular type pavement may be used. Blast cleaning may be used but will not be required unless specifically shown in the plans. Over-painting of the markings SHALL NOT BE permitted. Removal of raised pavement markers shall be as directed by the Engineer.

Removal of existing pavement markings and markers will be paid for directly in accordance with the item "ELIMINATING EXISTING PAVEMENT MARKINGS AND MARKERS" unless otherwise stated elsewhere in the plans.

SPECIFICATION REFERENCE TABLE

MATERIALS AND TESTS DIVISION SPECIFICATIONS	
JIGGLE BAR TILE	D-9-4100
PAVEMENT MARKERS (REFLECTORIZED)	D-9-4200
TRAFFIC BUTTONS	D-9-4300
EPOXY	D-9-6100
BITUMINOUS ADHESIVE FOR PAVEMENT MARKERS	D-9-6130
PREFABRICATED PAVEMENT MARKINGS - REMOVABLE	D-9-8241
TEMPORARY FLEXIBLE-REFLECTIVE ROADWAY MARKER TABS	D-9-8242

PREQUALIFICATION PROCEDURES MAY BE OBTAINED BY WRITING:

GENERAL SERVICES DIVISION
TEXAS DEPARTMENT OF TRANSPORTATION (TxDOT)
125 EAST 11th STREET
AUSTIN, TX 78701-2483

Temporary Construction Raised Pavement Markers used as Guidemarks:

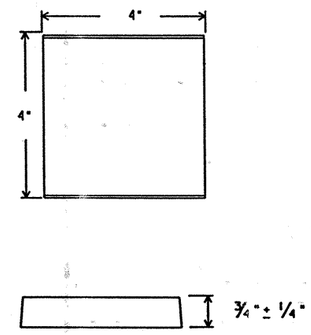

The above temporary construction raised pavement marker is shown for illustration purposes only and not intended to specify any particular product.

Temporary construction raised pavement markers used as guidemarks shall be of design and manufacture approved by the Engineer.

All temporary construction raised pavement markers provided on a project shall be of the same manufacturer.

Adhesive for guidemarks shall be bituminous material hot applied or butyl rubber pad for all surfaces, or thermoplastic for concrete surfaces.

Temporary Flexible-Reflective Roadway Marker Tabs

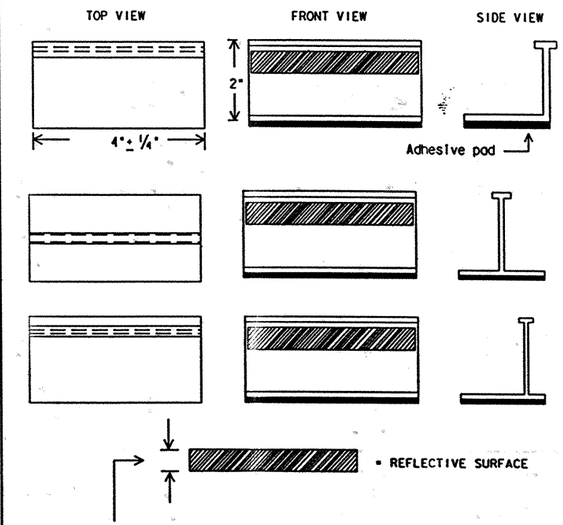

Height of sheeting will be determined by notes under MAINTENANCE.
(Usually more than 1/4 inch and less than 1 inch.)

STAPLES OR NAILS SHALL NOT BE USED TO SECURE TEMPORARY FLEXIBLE-REFLECTIVE ROADWAY MARKERS TABS TO THE PAVEMENT SURFACE

Temporary flexible-reflective roadway marker tabs used as guidemarks shall meet the requirements of Departmental Material Specification D-9-8242.

Tabs detailed on this sheet are to be inspected and accepted by the Engineer or designated representative. Sampling and testing is not normally required, however at the option of the Engineer, either "A" or "B" below may be imposed to assure quality before placement on the roadway.

A) Select five (5) or more tabs at random from each lot or shipment and submit to the Construction Division, Materials and Tests section to determine specification compliance.
B) Select five (5) tabs and submit to the following test. Affix five (5) tabs at 24 inch intervals on an asphaltic pavement in a straight line. Using a medium size passenger vehicle or pickup, run over the markers with front and rear wheels at a speed of 35 to 40 miles per hour, four times in each direction. No more than one (1) out of five reflective surfaces shall be lost or displaced as a result of this test.

Guidemarks shall be designated as:

YELLOW - (two amber reflective surfaces with yellow body).
WHITE - (one silver reflective surface with white body).

Dimensions indicated on this sheet are typical and approximate. Variations in size and height may occur between markers or devices made by manufacturers, by as much as 1/4 inch, unless otherwise noted.

STANDARD PLANS
TEXAS DEPARTMENT OF TRANSPORTATION
Traffic Operations Division

BARRICADE AND CONSTRUCTION STANDARDS

PAVEMENT MARKINGS — BC(7)-98

©TxDOT April 1992

DW: LR	CK: DTN	DN: DN	CK: GB	REG NO.

REVISIONS	STATE DISTRICT	FEDERAL REGION	FEDERAL AID PROJECT	SHEET
2-94 1-97 2-98	22	6	NH99(462)	236

COUNTY	CONTROL	SECTION	JOB	HIGHWAY
WEBB	0018	06	131	IH35

LEVELS DISPLAYED
DATE:
ACC:
FILE:
DW:
CK:

DISCLAIMER
The use of this standard is governed by the "Texas Engineering Practice Act". No warranty of any kind is made by TxDOT for any purpose whatsoever. TxDOT assumes no responsibility for the conversion of this standard to other formats or for incorrect results or damages resulting from its use.

PAVEMENT MARKING PATTERNS

CENTER LINE & NO-PASSING ZONE BARRIER LINES FOR TWO LANE TWO-WAY HIGHWAYS

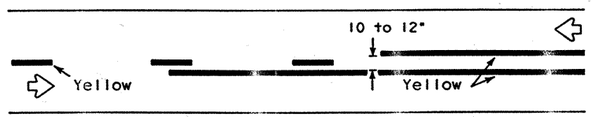

REFLECTORIZED PAVEMENT MARKINGS - PATTERN A

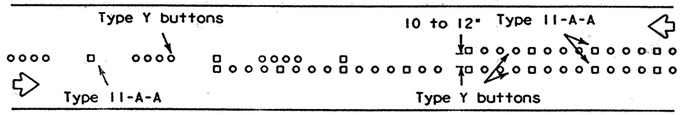

RAISED MARKERS - PATTERN A

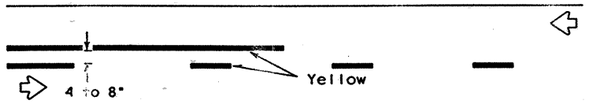

REFLECTORIZED PAVEMENT MARKINGS - PATTERN B

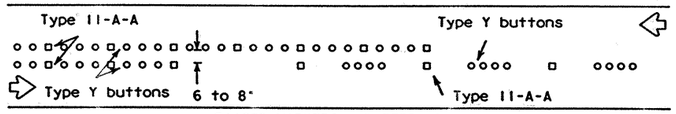

RAISED MARKERS - PATTERN B

EDGE & LANE LINES FOR DIVIDED HIGHWAY

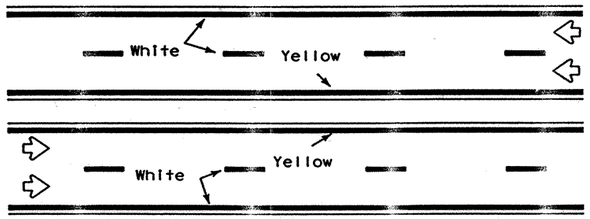

REFLECTORIZED PAVEMENT MARKINGS

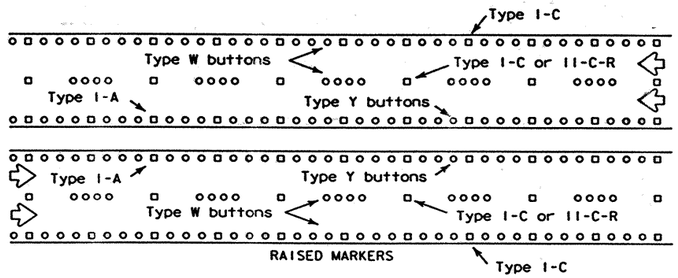

RAISED MARKERS

LANE & CENTER LINES FOR MULTILANE UNDIVIDED HIGHWAYS

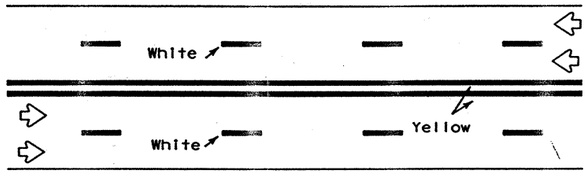

REFLECTORIZED PAVEMENT MARKINGS

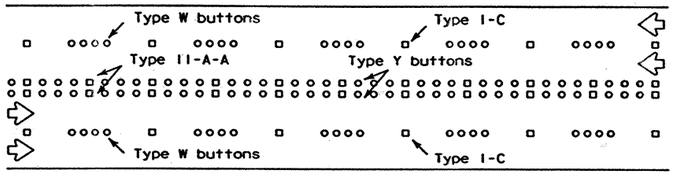

RAISED MARKERS

TWO-WAY LEFT TURN LANE

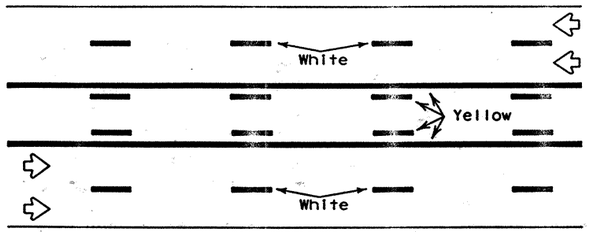

REFLECTORIZED PAVEMENT MARKINGS

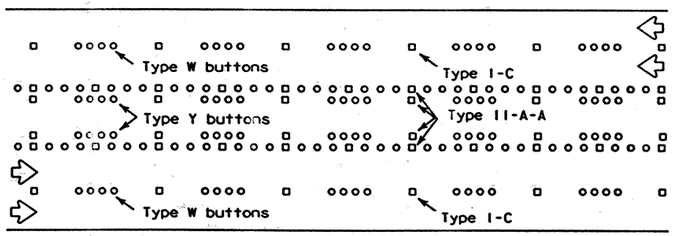

RAISED MARKERS

STANDARD WORK ZONE PAVEMENT MARKINGS DETAILS

SOLID LINES

DOUBLE NO-PASSING LINE

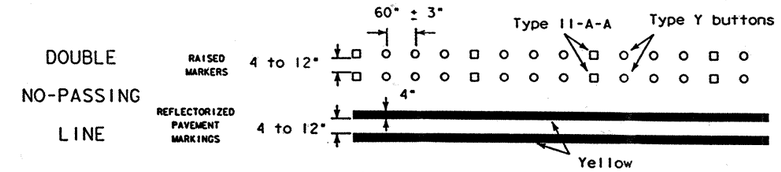

EDGE LINE OR SINGLE NO-PASSING LINE

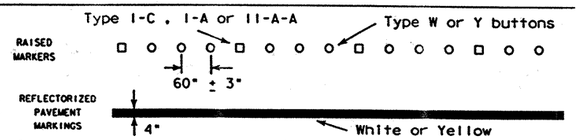

WIDE LINE

(FOR LEFT TURN CHANNELIZING LINE OR CHANNELIZING LINE USED TO DISCOURAGE LANE CHANGING.)

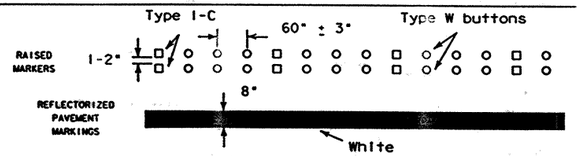

BROKEN LINE

(FOR CENTER LINE OR LANE LINE.)

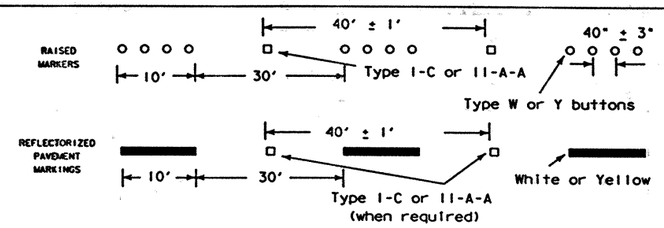

REMOVABLE MARKINGS WITH RAISED PAVEMENT MARKERS

If raised pavement markers are used to supplement REMOVABLE markings, the markers shall be applied to the top of the tape at the approximate mid length of tape used for broken lines and at approximately 20 foot spacing for solid lines. This allows an easier removal of raised markers and tape.

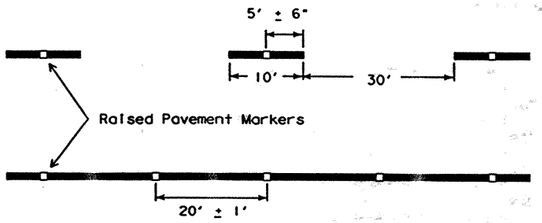

NOTES:
Pattern A is the Department Standard, however Pattern B may be used if approved by the Engineer.
Prefabricated markings may be substituted for reflectorized pavement markings.

Raised pavement markers used as standard pavement markings shall meet the requirements of items "RAISED PAVEMENT MARKERS" and "EPOXY AND ADHESIVES."

STANDARD PLANS
TEXAS DEPARTMENT OF TRANSPORTATION
Traffic Operations Division

BARRICADE AND CONSTRUCTION STANDARDS

PAVEMENT MARKINGS — BC(8)-98

©TxDOT April 1992	DN: LR	CK: DTN	DN: DN	CK: GB			
REVISIONS 2-94 1-97 2-98	STATE DISTRICT	FEDERAL REGION	FEDERAL AID PROJECT				SHEET
	22	6	NH 99 (462)				237
	COUNTY		CONTROL	SECTION	JOB		HIGHWAY
	WEBB		0018	06	131		IH35

LEVELS DISPLAYED
DATE:
ACC:
FILE:
DW:
CK:

DISCLAIMER
The use of this standard is governed by the "Texas Engineering Practice Act". No warranty of any kind is made by TxDOT for any purpose whatsoever. TxDOT assumes no responsibility for the conversion of this standard to other formats or for incorrect results or damages resulting from its use.

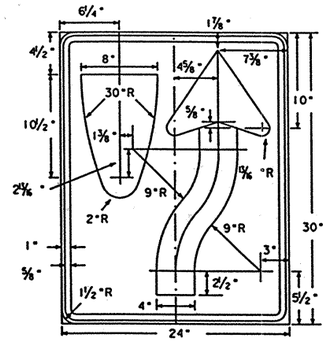

R4-7
(R4-8)
24" X 30"

Symbol - Black
Border - Black
Background - White Refl.

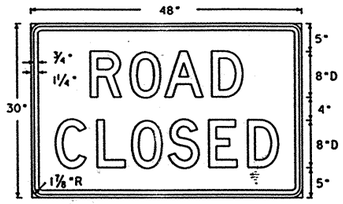

R11-2
48" X 30"

Letters - Black
Border - Black
Background - White Refl.

Alternate 1st line legend

STREET I 8"D R11-2S
RAMP I 8"D R11-2R
BRIDGE I 8"D R11-2B

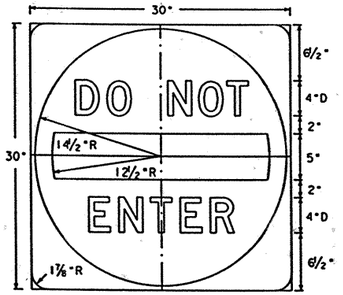

R5-1
30" X 30"

Letters - White Refl.
Bar - White Refl.
Border - White Refl.
Background - Red Refl.

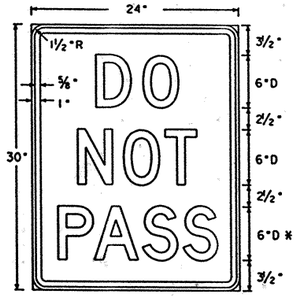

* reduce spacing 40%

R4-1
24" X 30"

Letters - Black
Border - Black
Background - White Refl.

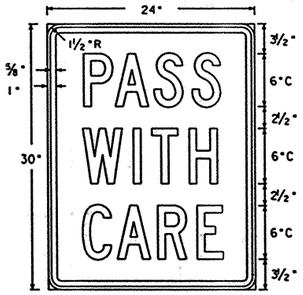

R4-2
24" X 30"

Letters - Black
Border - Black
Background - White Refl.

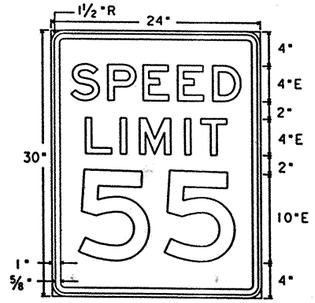

R2-1
24" X 30"

Letters - Black
Border - Black
Background - White Refl.

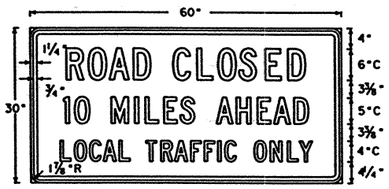

R11-3a
60" X 30"

Letters - Black
Numerals - Black
Border - Black
Background - White Refl.

Alternate 1st line legend

BRIDGE OUT I 6"C R11-3b

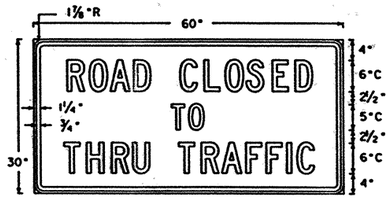

R11-4
60" X 30"

Letters - Black
Border - Black
Background - White Refl.

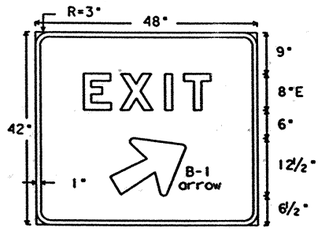

E5-1a
48" X 42"

Letters - White Refl.
Numerals - White Refl.
Symbol - White Refl.
Background - Green Refl.

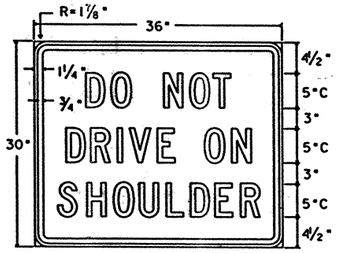

R4-3a
36" X 30"

Letters - Black
Border - Black
Background - White Refl.

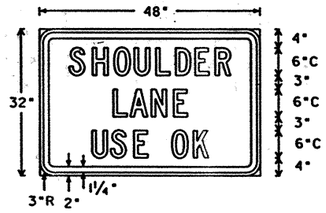

R4-3d
48" X 32"

Letters - Black
Border - Black
Background - White Refl.

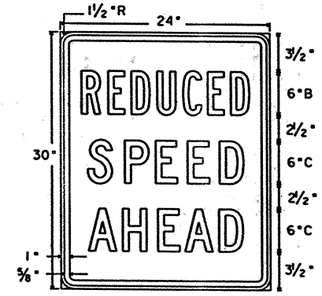

R2-5a
24" X 30"

Letters - Black
Border - Black
Background - White Refl.

R3-22
48" X 60"

Letters - Black
Border - Black
Background - White Refl.

R5-7
24" X 12"

Letters - Black
Border - Black
Background - White Refl.

ER20-5
36" X 36"

Letters - Black
Border - Black
Background - White Refl.

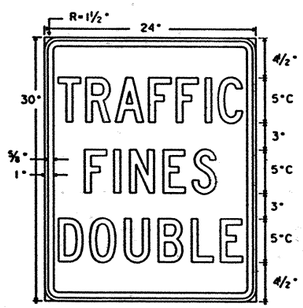

R20-5
24" X 30"

Letters - Black
Border - Black
Background - White Refl.

E5-2
48" X 48"

Letters - Black
Border - Black
Background - Orange Refl.

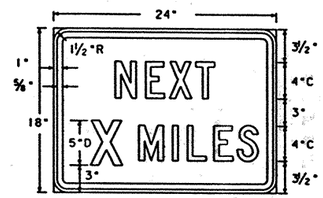

R20-1
24" X 18"

Letters - Black
Border - Black
Background - White Refl.

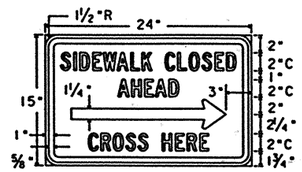

R5-9a
24" X 15"

Letters - Black
Symbol - Black
Border - Black
Background - White Refl.

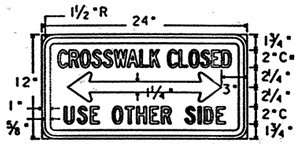

* reduce spacing 40%

R5-9
24" X 12"

Letters - Black
Symbol - Black
Border - Black
Background - White Refl.

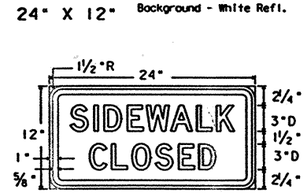

R5-8
24" X 12"

Letters - Black
Border - Black
Background - White Refl.

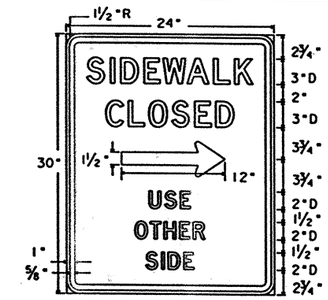

R5-8T
24" X 30"

Letters - Black
Symbol - Black
Border - Black
Background - White Refl.

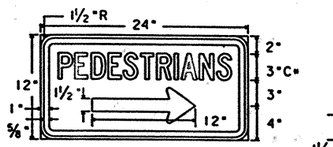

* reduce spacing 40%

R5-7T
24" X 12"

Letters - Black
Symbol - Black
Border - Black
Background - White Refl.

Signs E5-1a, E5-2 and R5-1 - letters, border and symbol may be fabricated from FLAT REFLECTIVE SHEETING, TYPE C.

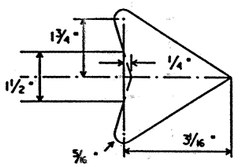

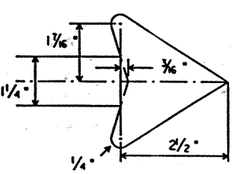

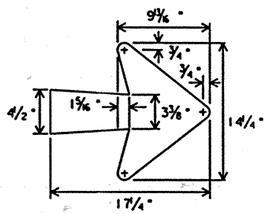

B-1 Arrow Detail

STANDARD PLANS
TEXAS DEPARTMENT OF TRANSPORTATION
Traffic Operations Division

BARRICADE AND CONSTRUCTION STANDARDS

REGULATORY AND GUIDE SIGNS

BC(9)-98

©TxDOT February 1998

DN-GB	CK-DTN	DW-DN	CK-GB	REC NO.#

REVISIONS

STATE DISTRICT	FEDERAL REGION	FEDERAL AID PROJECT	SHEET
22	6	NH 99 (462)	23B

COUNTY	CONTROL	SECTION	JOB	HIGHWAY
WEBB	0018	06	131	IH35

LEVELS DISPLAYED
1 | 14 15 16 17 18 19 10 11 12 13 14 15 16
17 18 19 20 21 22 23 24 25 26 27 28 29 30 31 32
33 34 35 36 37 38 39 40 41 42 43 44 45 46 47 48
49 50 51 52 53 54 55 56 57 58 59 60 61 62 63

DATE:
ACC:
FILE:
DW:
CK:

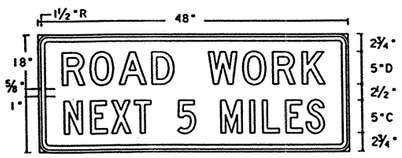

SG20-1
48" X 18"

Letters - Black
Numbers - Black
Border - Black
Background - Orange Refl.

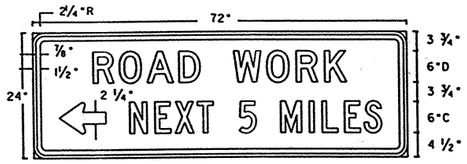

G20-1bL (R)
72" X 24"

Letters - Black
Numbers - Black
Border - Black
Background - Orange Refl.

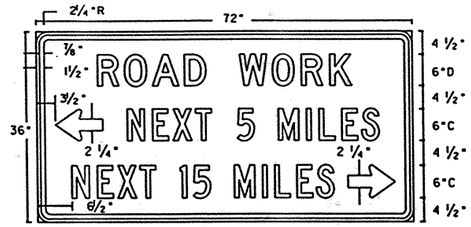

G20-1a
72" X 36"

Letters - Black
Numbers - Black
Border - Black
Background - Orange Refl.

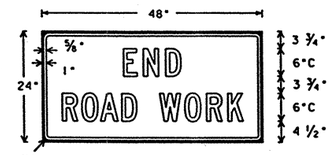

G20-2a
48" X 24"

Letters - Black
Border - Black
Background - Orange Refl.

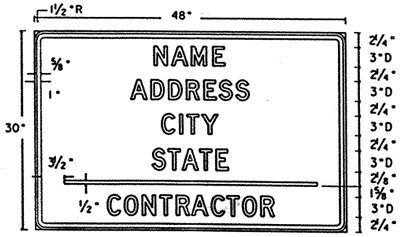

SG20-6
48" X 30"

Letters - Black
Border - Black
Background - Orange Refl. or White Refl. (optional)

NOTE:
G20-1 Series signs shall show distances rounded to nearest whole mile. Fractions and decimal miles will not be used.

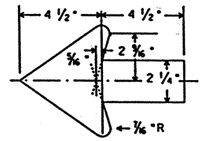

CW22-2a
60" X 36"

Letters - Black
Number - Black
Border - Black
Background - Orange Refl.

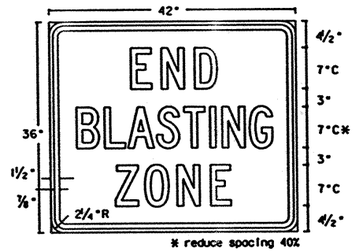

* reduce spacing 40%

CW22-3
42" X 36"

Letters - Black
Border - Black
Background - Orange Refl.

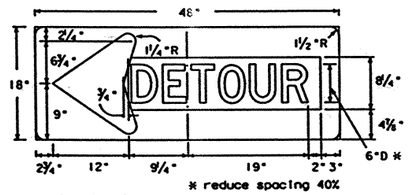

* reduce spacing 40%

M4-10L (R)
48" X 18"

Letters - Black
Arrow - Orange Refl.
Background - Black

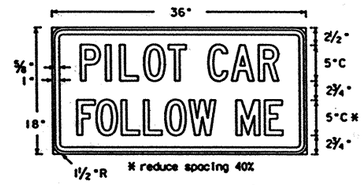

* reduce spacing 40%

G20-4
36" X 18"

Letters - Black
Border - Black
Background - Orange (Refl. Optional)

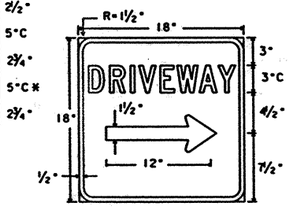

D-70a
18" X 18"

Letters - White Refl.
Symbol - White Refl.
Border - White Refl.
Background - Blue Refl.

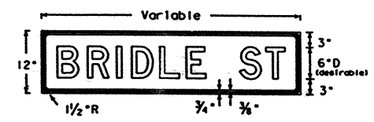

M4-9N
Variable X 12"

Letters - Black
Border - Black
Background - Orange Refl.

The M4-9R,L or S sign is to be used to detour local streets or roads that are not a State or Federal numbered highway; however, it should not be used in lieu of the M4-10 sign at the beginning of the detour or to detour State or Federal numbered routes.

Also, when the M4-9R,L or S sign is used, a sign (M4-9N) with the name of the street being detoured may be mounted above it.

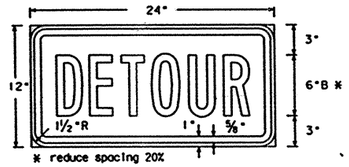

* reduce spacing 20%

M4-8
24" X 12"

Letters - Black
Border - Black
Background - Orange Refl.

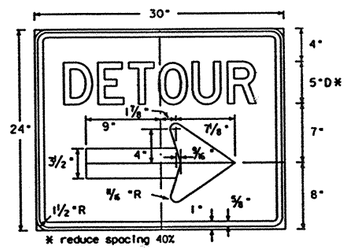

* reduce spacing 40%

M4-9R(L)
30" X 24"

Letters - Black
Symbol - Black
Border - Black
Background - Orange Refl.

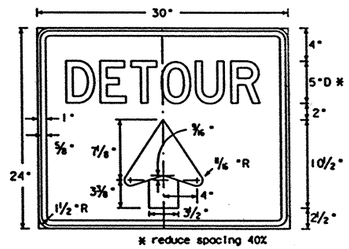

* reduce spacing 40%

M4-9S
30" X 24"

Letters - Black
Symbol - Black
Border - Black
Background - Orange Refl.

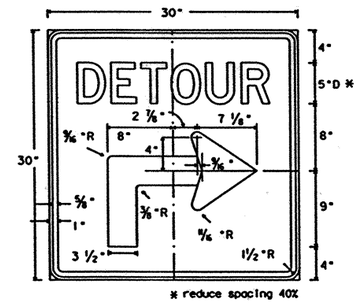

* reduce spacing 40%

M4-9AR(L)
30" X 30"

Letters - Black
Symbol - Black
Border - Black
Background - Orange Refl.

D-70S
42" X 14"

Letters - White Refl.
Symbol - White Refl.
Border - White Refl.
Background - Blue Refl.

* Alternate first line legend for D-70S

RESTAURANT | D70R 4"C
BUSINESS | D70B 4"C
MOTEL | D70M 4"C
GAS | D70G 4"C

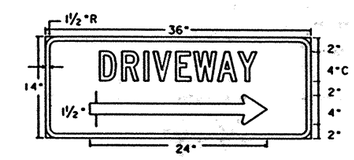

D-70
36" X 14"

Letters - White Refl.
Symbol - White Refl.
Border - White Refl.
Background - Blue Refl.

NOTE:
STOP, YIELD, and SIGNAL AHEAD symbol signs should be yellow background.

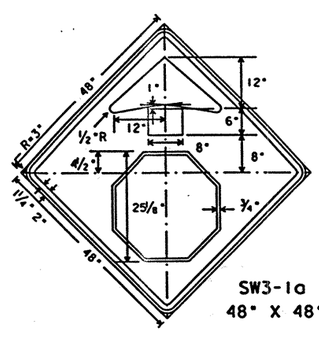

SW3-1a
48" X 48"

Border and Arrow - Black
Symbol - White Border on Red Background (Refl)
Background - Yellow Reflective

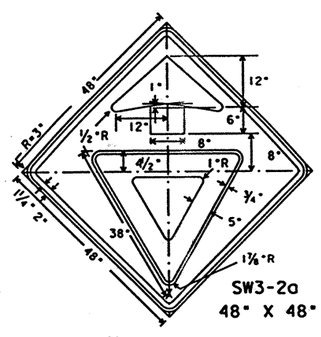

SW3-2a
48" X 48"

Border and Arrow - Black
Symbol - Red Border Band on White Background (Refl)
Background - Yellow Reflective

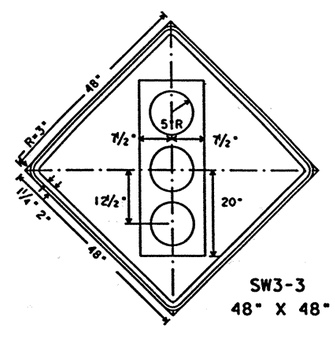

SW3-3
48" X 48"

Symbol and Border - Black
Top Circle - Red Reflective
Bottom Circle - Green Reflective
Background - Yellow Reflective

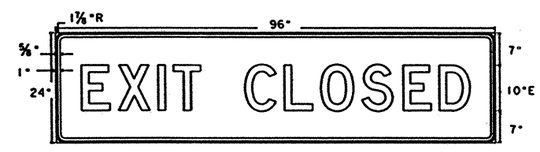

CW26-1T
96" X 24"

Letters - Black
Border - Black
Background - Orange Refl.

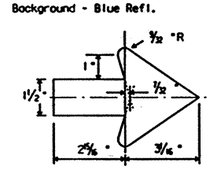

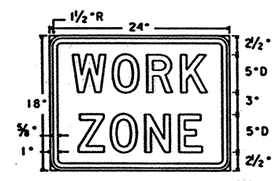

G20-9
24" X 18"

Letters - Black
Border - Black
Background - Orange Refl.

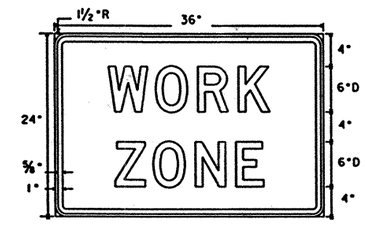

EG20-9
36" X 24"

Letters - Black
Border - Black
Background - Orange Refl.

DISCLAIMER
The use of this standard is governed by the "Texas Engineering Practice Act". No warranty of any kind is made by TxDOT for any purpose whatsoever. TxDOT assumes no responsibility for the conversion of this standard to other formats or for incorrect results or damages resulting from its use.

LEVELS DISPLAYED
1 4 5 6 7 8 9 10 11 12 13 14 15 16
17 18 19 20 21 22 23 24 25 26 27 28 29 30 31 32
33 34 35 36 37 38 39 40 41 42 43 44 45 46 47 48
49 50 51 52 53 54 55 56 57 58 59 60 61 62 63

DATE:
DW:
CK:
ACC:
FILE:

STANDARD PLANS
TEXAS DEPARTMENT OF TRANSPORTATION
Traffic Operations Division

BARRICADE AND CONSTRUCTION STANDARDS

CONTRACTOR INFORMATION, DETOURS & WARNING SIGNS

BC(9A)-98

©TxDOT February 1998

DN: GB	CK: DTN	DW: DN	CK: GB	REC NO.:

REVISIONS	STATE DISTRICT	FEDERAL REGION	FEDERAL AID PROJECT	SHEET
	22	6	NH99(462)	239

COUNTY	CONTROL	SECTION	JOB	HIGHWAY
WEBB	0018	06	131	IH35

DISCLAIMER
The use of this standard is governed by the "Texas Engineering Practice Act". No warranty of any kind is made by TxDOT for any purpose whatsoever. TxDOT assumes no responsibility for the conversion of this standard to other formats or for incorrect results or damages resulting from its use.

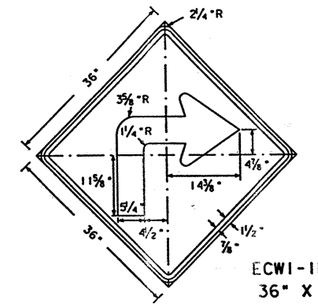

ECW1-1R(L)
36" X 36"

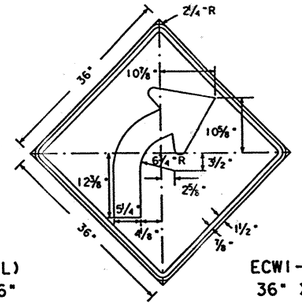

ECW1-2R(L)
36" X 36"

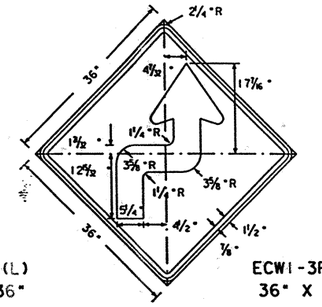

ECW1-3R(L)
36" X 36"

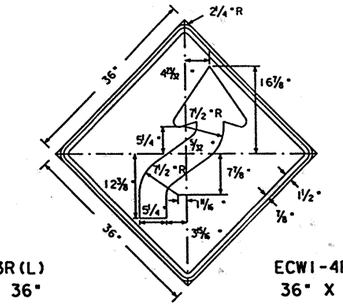

ECW1-4R(L)
36" X 36"

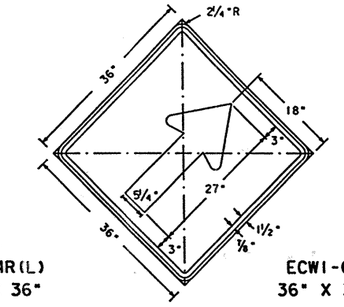

ECW1-6a
36" X 36"

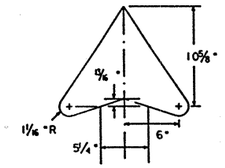

ARROW DETAIL FOR
ECW1-1, ECW1-2, ECW1-3,
ECW1-4 AND ECW1-6a.

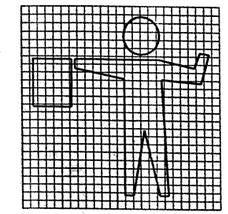

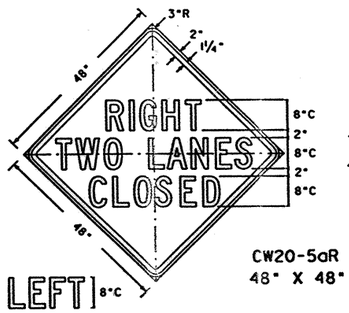

CW20-5aR
48" X 48"

CW20-5aL

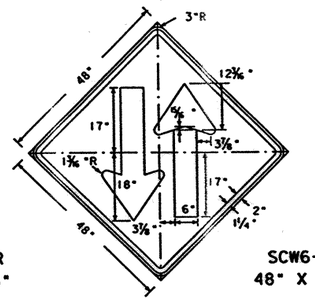

SCW6-3
48" X 48"

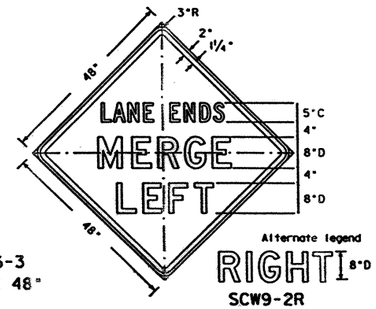

Alternate legend
RIGHT 8"D

SCW9-2R

SCW9-2L
48" X 48"

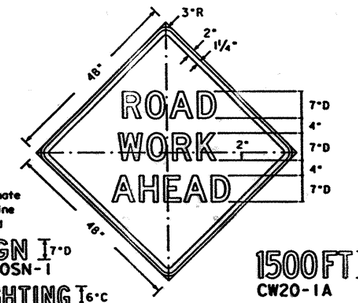

Alternate
1st line
legend

SIGN 7"D
CW20SN-1

LIGHTING 6"C
CW20LT-1

BRIDGE 6"C
CW20BR-1

RAMP 7"D
CW20RP-1

SIGNAL 6"C
CW20SG-1

STREET
CW20ST-1

CW20-1D
48" X 48"

1500FT 7"C*
CW20-1A

1000FT 7"C*
CW20-1B

500FT 7"C
CW20-1C

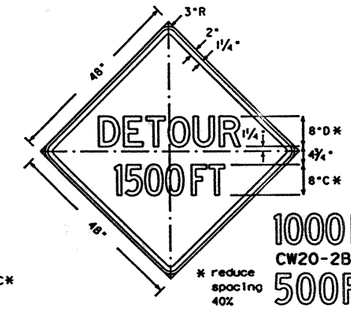

* reduce
spacing
40%

CW20-2A
48" X 48"

1000FT 8"C*
CW20-2B

500FT 8"C
CW20-2C

AHEAD 8"D
CW20-2D

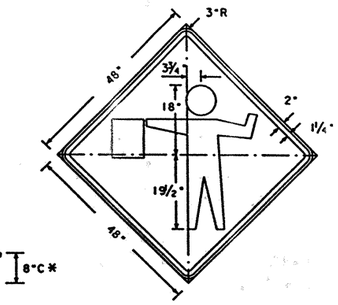

FCW20-7a
48" X 48"

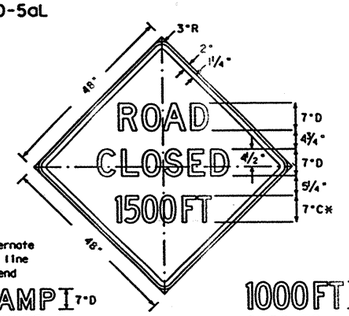

Alternate
1st line
legend

RAMP 7"D
CW20RP-3

FRWY 7"D
CW20FY-3

STREET 7"C
CW20ST-3

CW20-3A
48" X 48"

1000FT 7"C*
CW20-3B

500FT 7"C
CW20-3C

AHEAD 7"D
CW20-3D

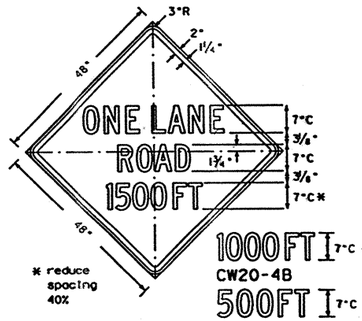

* reduce
spacing
40%

CW20-4A
48" X 48"

1000FT 7"C*
CW20-4B

500FT 7"C
CW20-4C

AHEAD 7"C
CW20-4D

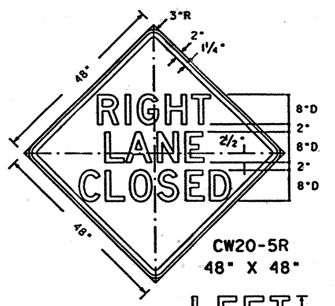

CW20-5R
48" X 48"

LEFT 8"D
CW20-5L

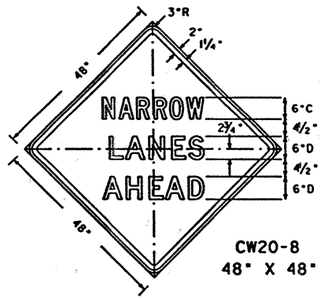

CW20-8
48" X 48"

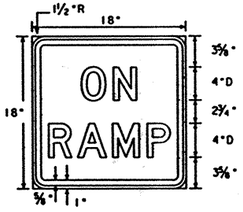

CW13-4
18" X 18"

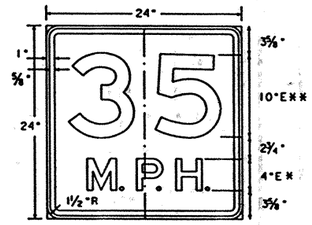

* Increase spacing 100%
** optically space numerals about vert. centerline

SCW13-1
24" X 24"

Speed value to be determined at the site by the Engineer.

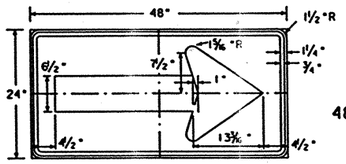

CW1-6
48" X 24"

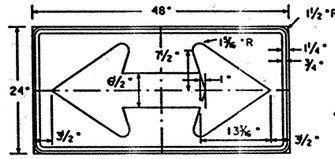

CW1-7
48" X 24"

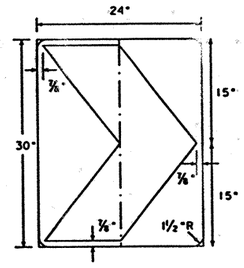

SCW1-8
24" X 30"

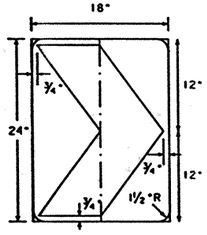

CW1-8
18" X 24"

GENERAL NOTES:
All signs detailed on this sheet shall have Black border, legend and/or symbol on an orange Type C reflective background.

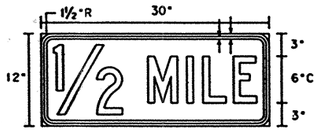

Distance Plaque
30" X 12"

Alternate legends

1 MILE 6"C 1000 FT 6"C

1500 FT 6"C 500 FT 6"C

STANDARD PLANS
TEXAS DEPARTMENT OF TRANSPORTATION
Traffic Operations Division

BARRICADE AND CONSTRUCTION STANDARDS

CONSTRUCTION WARNING SIGNS BC(9B)-98

©TxDOT February 1998	DN: GB	CK: DTN	DW: DN	CK: GB	FED. RD. DIV.

REVISIONS	STATE DISTRICT	FEDERAL REGION	FEDERAL AID PROJECT	SHEET
	22	6	NH 99 (462)	240

COUNTY	CONTROL	SECTION	JOB	HIGHWAY
WEBB	0018	06	131	IH35

LEVELS DISPLAYED
1 2 3 4 5 6 7 8 9 10 11 12 13 14 15 16
17 18 19 20 21 22 23 24 25 26 27 28 29 30 31 32
33 34 35 36 37 38 39 40 41 42 43 44 45 46 47 48
49 50 51 52 53 54 55 56 57 58 59 60 61 62 63

DATE:
ACC:
FILE:
DN:
DW:
CK:

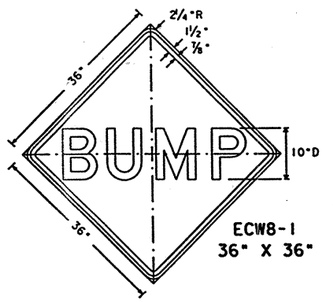

ECW8-1
36" X 36"

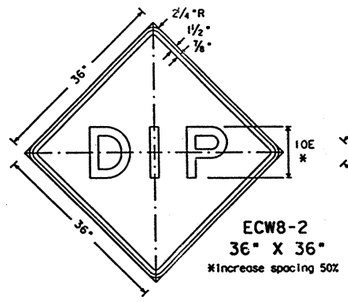

ECW8-2
36" X 36"
*Increase spacing 50%

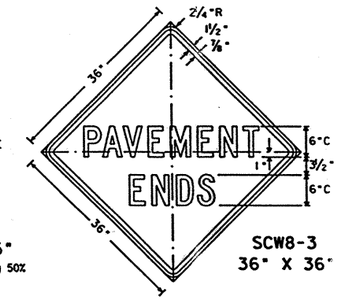

SCW8-3
36" X 36"

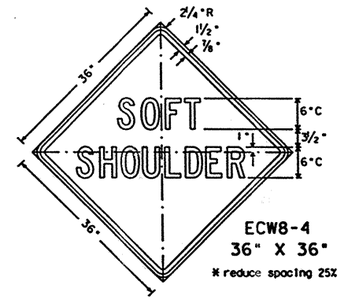

ECW8-4
36" X 36"
* reduce spacing 25%

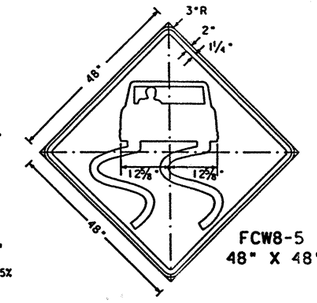

FCW8-5
48" X 48"

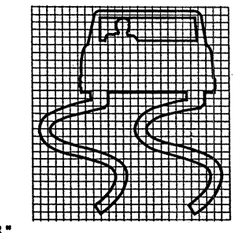

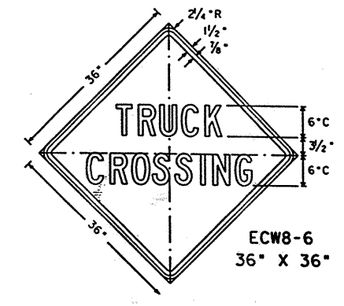

ECW8-6
36" X 36"

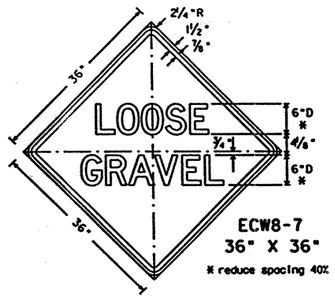

ECW8-7
36" X 36"
* reduce spacing 40%

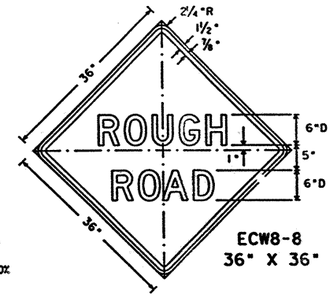

ECW8-8
36" X 36"

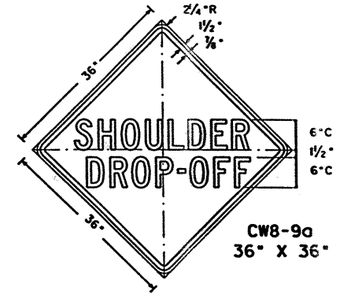

CW8-9a
36" X 36"

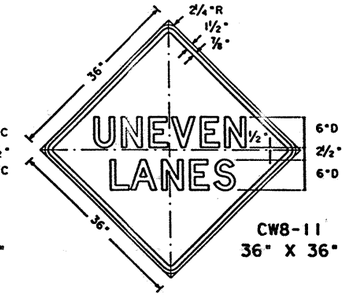

CW8-11
36" X 36"

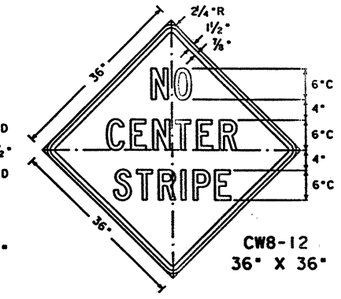

CW8-12
36" X 36"

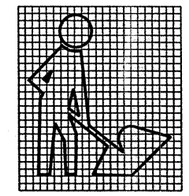

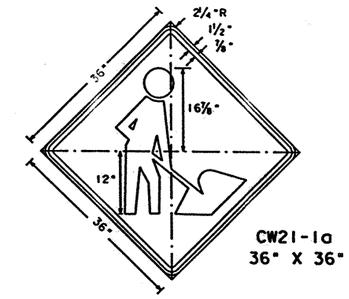

CW21-1a
36" X 36"

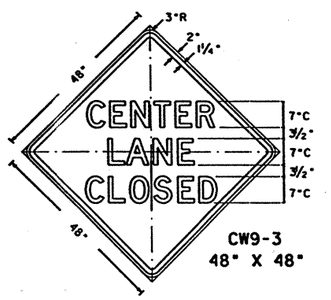

CW9-3
48" X 48"

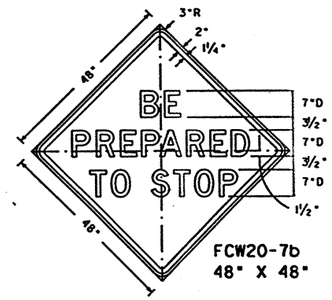

FCW20-7b
48" X 48"

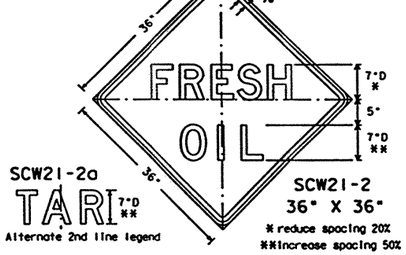

SCW21-2
36" X 36"
* reduce spacing 20%
**Increase spacing 50%

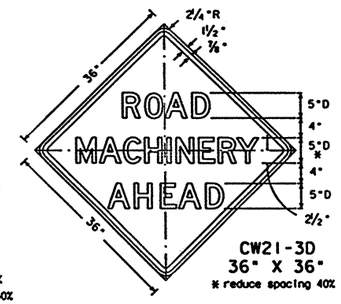

CW21-3D
36" X 36"
* reduce spacing 40%

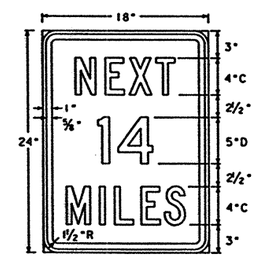

CW21-16
18" X 24"

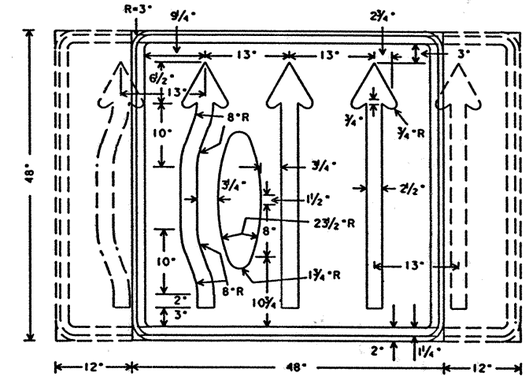

CW24-2
Var. X 48"
A mirror image may be used to show proper lane alignment.

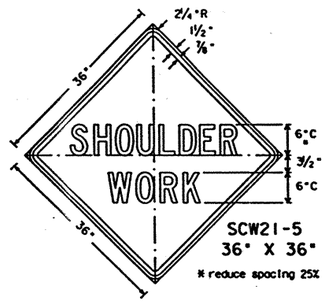

SCW21-5
36" X 36"
* reduce spacing 25%

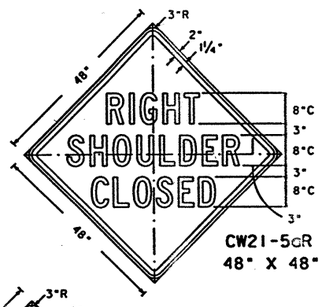

CW21-5aR
48" X 48"

LEFT 8"C
CW21-5aL

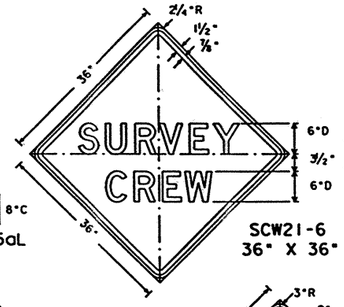

SCW21-6
36" X 36"

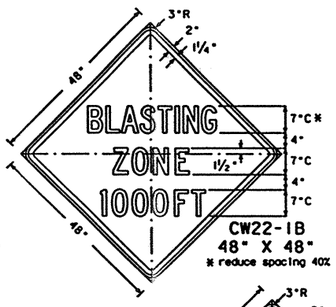

CW22-1B
48" X 48"
* reduce spacing 40%

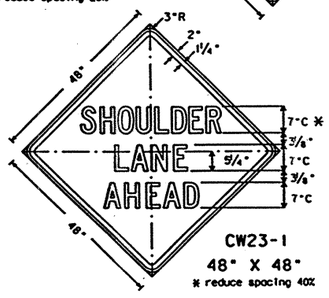

CW23-1
48" X 48"
* reduce spacing 40%

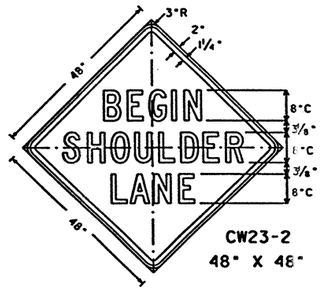

CW23-2
48" X 48"

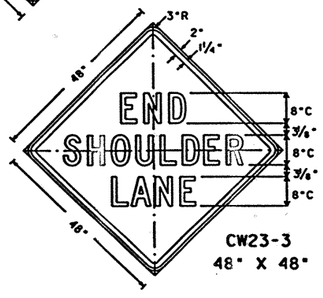

CW23-3
48" X 48"

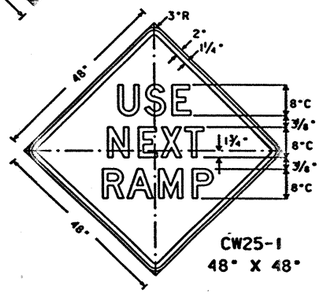

CW25-1
48" X 48"

GENERAL NOTES:
All signs detailed on this sheet shall have Black border, legend and/or symbol on an orange Type C reflective background.

DISCLAIMER
The use of this standard is governed by the "Texas Engineering Practice Act". No warranty of any kind is made by TxDOT for any purpose whatsoever. TxDOT assumes no responsibility for the conversion of this standard to other formats or for incorrect results or damages resulting from its use.

DWN:
CK:

LEVELS DISPLAYED
1 | 14 15 16 17 18 19 10 11 12 31 41 51 61
17 81 92 02 12 22 32 42 52 62 72 82 93 03 13 23
33 43 53 63 73 83 94 04 14 24 34 44 54 64 74 84
49 50 51 52 53 54 55 56 57 58 59 60 61 62 63

DATE:
ACC:
FILE:

STANDARD PLANS
TEXAS DEPARTMENT OF TRANSPORTATION
Traffic Operations Division

BARRICADE AND CONSTRUCTION STANDARDS

CONSTRUCTION WARNING SIGNS

BC(9C)-98

©TxDOT February 1998 | DN: GB | CK: DTN | DW: DN | CK: GB | REQ NO.:

REVISIONS

STATE DISTRICT	FEDERAL REGION	FEDERAL AID PROJECT	SHEET
22	6	NH99(462)	241

COUNTY	CONTROL	SECTION	JOB	HIGHWAY
WEBB	0018	06	131	IH35

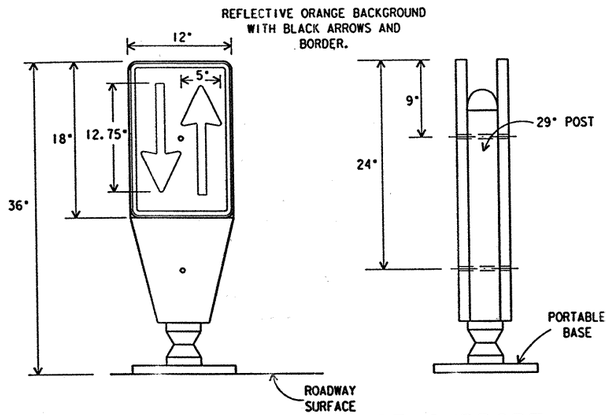

PORTABLE BASE SUPPORT

for Opposing Lane Divider

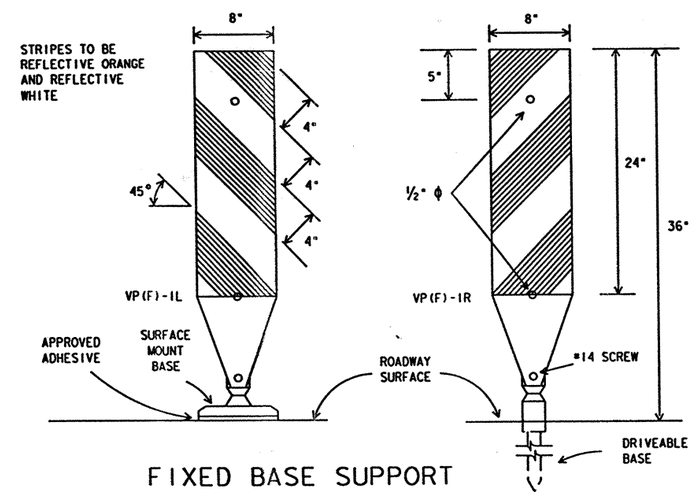

FIXED BASE SUPPORT

for Vertical Panels VP(F)-1

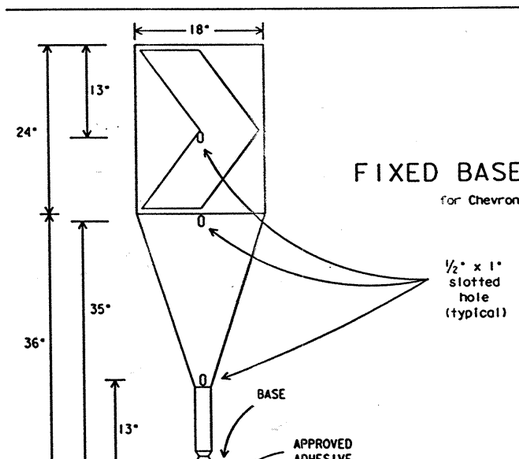

FIXED BASE SUPPORT

for Chevrons CWI-8(F)

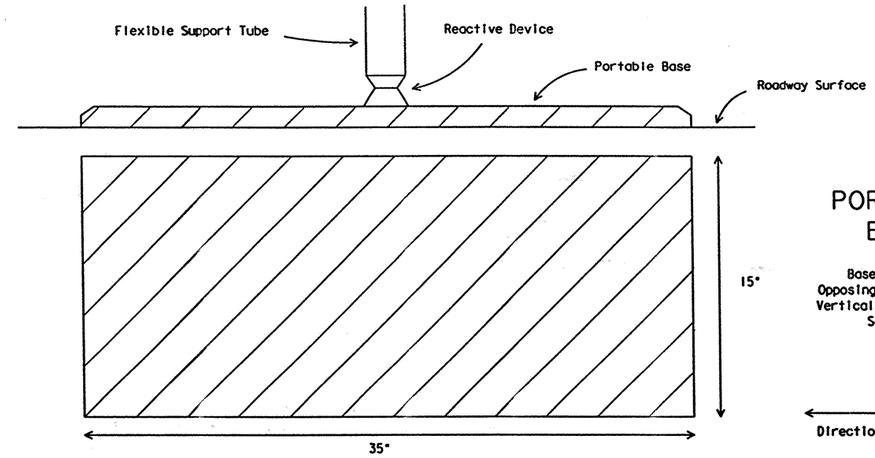

PORTABLE BASE

Base Support for Opposing Lane Divider or Vertical Panel (VP(F)-1). See Note 5.

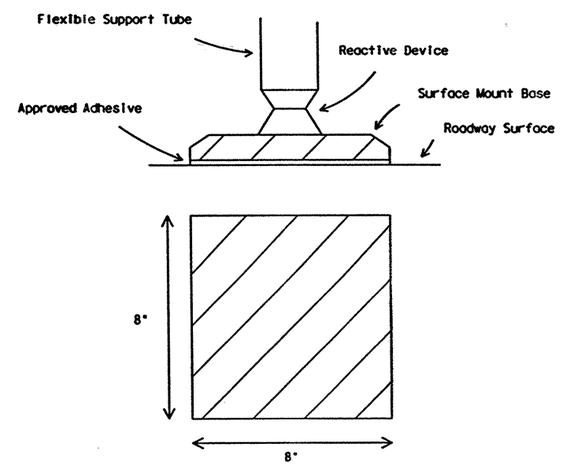

SURFACE MOUNT BASE

Fixed Base Support for Chevron CWI-8(F), Vertical Panels VP(F)-1 or Opposing Lane Divider.

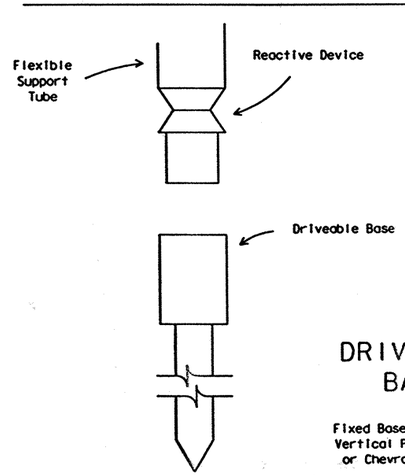

DRIVEABLE BASE

Fixed Base Support for Vertical Panel VP(F)-1 or Chevron CWI-8(F).

GENERAL NOTES:

1. Channelizing devices on flexible supports shall be used at locations detailed elsewhere in the plans. These devices shall conform to the Texas MUTCD.
2. Channelizing devices on flexible supports may be used in work zone areas where channelizing devices are frequently impacted by errant vehicles. Work zone channelizing devices illustrated on this sheet may be installed in close proximity to traffic and are suitable for use on high or low speed roadways. Spacing and placement shall be uniform and in accordance with the Texas MUTCD.
3. The contractor shall maintain devices in a clean condition and replace damaged, non-reflective, faded, or broken devices and bases as necessary.
4. Devices shall be fabricated to withstand repeated impacts with minimal maintenance to devices and damage to vehicles. When devices are impacted, they should not adversely affect worker or vehicle safety.
5. Devices shall be erected on a fixed, portable, or driveable base as approved by the Engineer.
6. Portable bases shall be fabricated from a flexible material such as virgin and/or recycled rubber. Approximate weight of portable bases should be 35 pounds.
7. Fixed bases may be surface mount or driveable type.
8. Pavement surfaces shall be prepared in a manner that will insure proper bonding of adhesives and surface mount bases to the pavement surfaces. Adhesives shall be prepared and applied as per manufacturer's recommendations.
9. Application and removal of devices shall not cause detrimental effects to the final pavement surfaces, including pavement surface discoloration or surface intregity. Driveable bases shall not be permitted on final pavement surfaces. All application and removal procedures of fixed bases shall be approved by the Engineer.
10. These devices shall not be paid for directly but shall be considered subsidiary to the item "Barricades, Signs, and Traffic Handling."

PREQUALIFICATION PROCEDURES MAY BE OBTAINED BY WRITING:

TRAFFIC OPERATIONS DIVISION
TEXAS DEPARTMENT OF TRANSPORTATION (TxDOT)
125 EAST 11th STREET
AUSTIN, TX 78701-2483

SPECIFICATION REFERENCE TABLE
MATERIALS AND TEST DIVISION SPECIFICATIONS

FLAT SURFACE REFLECTIVE SHEETING, TYPE C (HIGH SPECIFIC INTENSITY)	D-9-8300

STANDARD PLANS
TEXAS DEPARTMENT OF TRANSPORTATION
Traffic Operations Division

WORK ZONE CHANNELIZING DEVICES ON FLEXIBLE SUPPORTS

WZ(CD)-94

©TxDOT January 1992

DN: LR	CK:	DN: DN	CK:	REG NO.

REVISIONS 9-94

STATE DISTRICT	FEDERAL REGION	FEDERAL AID PROJECT	SHEET
22	6	NH99(462)	242

COUNTY	CONTROL	SECTION	JOB	HIGHWAY
WEBB	0018	06	131	IH35

LEVELS DISPLAYED
1 2 3 4 5 6 7 8 9 10 11 12 13 14 15 16
17 18 19 20 21 22 23 24 25 26 27 28 29 30 31 32
33 34 35 36 37 38 39 40 41 42 43 44 45 46 47 48
49 50 51 52 53 54 55 56 57 58 59 60 61 62 63

DATE:
ACC: d58hplc/usr/d580504
FILE:
LR CW DW: DN CK: MT

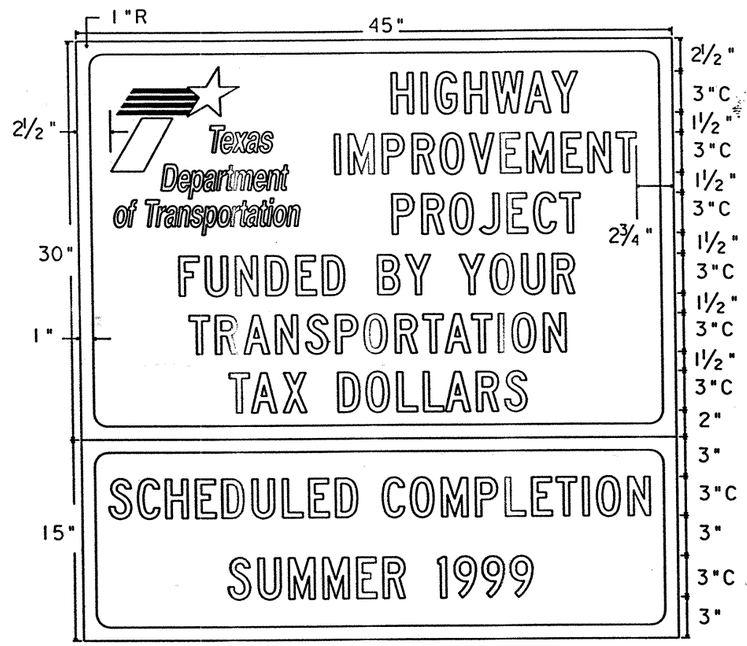

The TxDOT logo is a registered trademark of the Texas Department of Transportation.

SIGN AND SUPPORTS SHALL BE CONSIDERED SUBSIDIARY TO ITEM 502, "BARRICADES, SIGNS AND TRAFFIC HANDLING."

SPECIFICATION REFERENCE TABLE

MATERIALS AND TESTS DIVISION SPECIFICATIONS	
PLYWOOD SIGN BLANKS	D-9-7100
ALUMINUM SIGN BLANKS	D-9-7110
REFLECTIVE SHEETING, TYPE A (ENGINEER GRADE)	D-9-8300
REFLECTIVE SHEETING, TYPE C (HIGH SPECIFIC INTENSITY)	D-9-8300
SIGN HARDWARE	D-9-7120

COLOR	USAGE	REFLECTIVE SHEETING OR OTHER MATERIAL
BLUE	BACKGROUND	TYPE C (HIGH SPECIFIC INTENSITY)
WHITE	BACKGROUND	TYPE A (ENGINEER GRADE)
BLUE	LEGEND & BORDER	TYPE C (HIGH SPECIFIC INTENSITY)
WHITE	LEGEND & BORDER	TYPE A (ENGINEER GRADE)

SG20-8

45" x 30" sign

TxDOT logo - standard red & blue (auto decal)
Background - white
Legend & border - blue

45" x 15" plaque

Background - blue
Legend & border - white

GENERAL NOTES:

The alphabets and lateral spacing between letters and numerals shall conform with the Texas "Manual on Uniform Traffic Control Devices for Streets and Highways", latest edition, and any approved changes thereto. Lateral spacing of text shall provide a balanced appearance. All materials shall conform to Department Specifications.

Legend and border may be applied by reverse screening process with transparent colored ink, cut-out white reflective sheeting applied to colored background or combination thereof. Background shall be reflective sheeting (Type A).

Sign blanks for roadside mounted guide signs shall be 5/8 inch thick plywood (Type A) or extruded aluminum, unless otherwise noted elsewhere in the plans. Dimensions shown for borders and corner radii are nominal. Borders may vary in width as much as 1/2 inch. Borders and corner radii must be of matching widths. The sign area outside the corner radius need not be trimmed or rounded. Panels attached below the parent sign shall be made of the same material as the parent sign, or as specified on the sign tabulation sheet.

Mounting details are shown on Standard Plan Sheets SMD series.

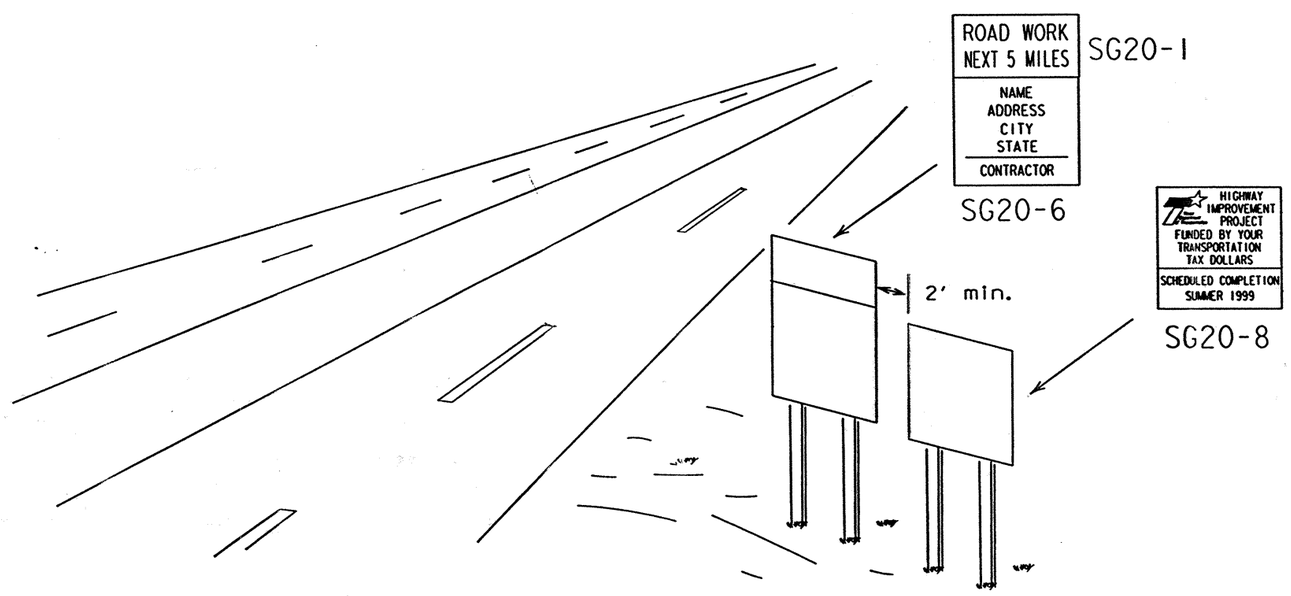

WOOD POST SYSTEM FOR FIXED SIGN SUPPORTS

Nominal Post Size	No. of Posts	Maximum Sq. feet of Sign Face	Minimum Soil Embedment	Drilled Hole(s) Required
4 x 4	1	12	36"	no
4 x 4	2	21	36"	no
4 x 6	1	21	36	YES

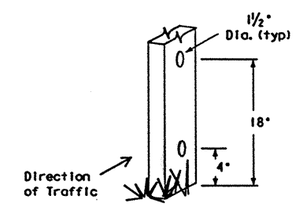

STANDARD PLANS
TEXAS DEPARTMENT OF TRANSPORTATION
Traffic Operations Division

SPECIAL PUBLIC INFORMATION SIGN

WZ(SPIS)-98A

©TxDOT May 1996

DN: MT	CK: DTN	DN: DN	CK: DM	HEC NO.:

REVISIONS
4-98
5-98

STATE DISTRICT	FEDERAL REGION	FEDERAL AID PROJECT	SHEET
22	6	NH99(462)	243

COUNTY	CONTROL	SECTION	JOB	HIGHWAY
WEBB	0018	06	131	IH35

DISCLAIMER
The use of this standard is governed by the "Texas Engineering Practice Act". No warranty of any kind is made by TxDOT for any purpose whatsoever. TxDOT assumes no responsibility for the conversion of this standard to other formats or for incorrect results or damages resulting from its use.

LEVELS DISPLAYED
1 2 3 4 5 6 7 8 9 10 11 12 13 14 15 16
17 18 19 20 21 22 23 24 25 26 27 28 29 30 31 32
33 34 35 36 37 38 39 40 41 42 43 44 45 46 47 48
49 50 51 52 53 54 55 56 57 58 59 60 61 62 63

DATE:
ACC: d58hplc/usr/d580504
FILE:

CK: CW
DW: DN
CK: MT

DISCLAIMER
The use of this standard is governed by the "Texas Engineering Practice Act". No warranty of any kind is made by TxDOT for any purpose whatsoever. TxDOT assumes no responsibility for the conversion of this standard to other formats or for incorrect results or damages resulting from its use.

DN:
CK:
DW:
CK:

LEVELS DISPLAYED

1	2	3	4	5	6	7	8	9	10	11	12	13	14	15	16
17	18	19	20	21	22	23	24	25	26	27	28	29	30	31	32
33	34	35	36	37	38	39	40	41	42	43	44	45	46	47	48
49	50	51	52	53	54	55	56	57	58	59	50	61	62	63	

DATE:
ACC:
FILE:

GENERAL NOTES

1. Additional details may be provided in the plans concerning sign size, type of channelization devices, sequence of work details, and required measures needed to control traffic during changes in the sequence of work.
2. All traffic control devices shall conform with the Texas "Manual on Uniform Traffic Control Devices for Streets and Highways" (TMUTCD), and shall be maintained as directed by the Engineer. Additional guidelines for traffic control devices may be found in the TMUTCD.
3. All distance and spacing shown on the TCP Standards are approximate.
4. All traffic control devices used during nighttime shall be reflectorized, illuminated from within or externally illuminated.
5. Additional information for fabrication, erection and usage of the following traffic control devices is found in the (TMUTCD) and Barricade and Construction (BC) Standards:

BARRICADES	BC(2) and BC(3)
CONES	BC(6)
BARRIER DELINEATION	WZ(BD)
DRUMS	BC(5)
PAVEMENT MARKINGS	BC(5), BC(7) and BC(8) WZ(STPM) or TCP(7-1) if applicable
SIGNS	BC(1), BC(2), BC(3), BC(4), BC(9), BC(9A), BC(9B) and BC(9C)

6. Work area operations are defined as follows:
   Long-term stationary - Work that occupies a location more than 3 days.
   Intermediate-term stationary - Work that occupies a location overnight to 3 days.
   Short-term stationary - Daytime work that occupies a location from 1 to 12 hours.
   Short Duration - Work that occupies a location up to 1 hour.
   Mobile - Work that moves intermittently or continuously.

SIGNS

1. Selection of sign size should be based on Table 1.
2. Flashing warning lights, channelizing devices and/or flags may be required to call attention to the advance warning signs.
3. The words UTILITY, SIGNAL, BRIDGE, LIGHTING, SIGN, STREET or RAMP may be substituted for ROAD in all signs where applicable.
4. Advisory speed plaques, if used in conjunction with warning signs, speeds shall be determined in the field by the Engineer.
5. Regulatory signs shall be mounted at 7 foot minimum mounting height.
6. Warning signs may be mounted on the approved types of supports at the minimum mounting heights as stated on BC(4):

CHANNELIZING DEVICES

1. The maximum spacing between channelizing devices in a taper should be approximately equal in feet to the speed limit (S).
2. For intermediate term situations, when it is not feasible to remove and restore pavement markings, the channelization must be made dominant by using a very close spacing. This is especially important in locations of conflicting information, such as where traffic is directed over a double yellow centerline. In such locations a maximum channelizing device spacing of 10 feet is recommended. The 10 foot channelizing device spacing recommendation is intended for the area of conflicting information and not the entire work zone.
3. Channelizing device spacing should be reduced when placed on curves, hills or next to potential hazards. At least three channelizing devices should be in view at all times.
4. MERGING taper (lane closure with merging traffic) =L
   SHIFTING taper (traffic diverted to adjacent lane) =1/2 L
   SHOULDER taper (shoulder closed to traffic) =1/3 L
5. DOWNSTREAM taper usage is optional. When used it should be 100 foot minimum length per lane. Devices should be spaced at approximately 20 foot intervals.
6. ONE LANE, TWO-WAY taper is intended for a portion of the road controlled by STOP, YIELD traffic signals or flagger and used alternately by traffic in each direction. It should be 50-100 foot length with devices spaced at approximately 20 foot intervals.
7. Arrow panels used on two-way, two-lane roadways should flash in the four corner CAUTION display.

WORKER SAFETY

1. Workers exposed to traffic should wear orange safety vests.
2. Work vehicles within 30 feet of the traveled way should have strobe lights or rotating beacons in use.
3. When work vehicles are used to shadow the work area, the vehicle should be parked 30 feet or more from the work area, transmission in gear (or set in PARK), emergency brake set on, and front wheels turned away from work area. Shadow vehicles shall be equipped with truck mounted atteauators.
4. Inactive work vehicles, including workers' private vehicles, should be parked away from the work area and as close to the right-of-way line as possible.

FLAGGER CONTROL

1. Flagger shall wear orange safety vests. Floggers should wear softey hats to provide a professional image to the motorist and to protect the head from flying objects.
2. STOP/SLOW paddles shall be used as the primary method to control traffic by flaggers. The STOP/SLOW paddle minimum size is 18" x 18". Paddles may be attached to a 60 inch staff for easier handling. The larger size (24" x 24") should be attached to a 60 inch staff.
3. The 24" paddle should be used when the posted speed is 45 MPH or greater.
4. Flags are only used to control traffic for emergency situations and the STOP/SLOW paddles are not available. Flags shall be 24" square and securely fastened to a staff approximately 3 feet long.
5. Flaggers may carry hand held air horns to alert workers of an emergency condition.
6. For one lane two-way traffic control, one or more flaggers should be used where traffic density, road conditions or motorists' sight distance justify their use. If flaggers are used, the taper should be reduced to 50-100 feet. When flaggers are used to control traffic, the FLAGGER symbol sign (FCW20-7a) shall be used. When flaggers are used, the BE PREPARED TO STOP sign (CW20-7b) should be used. Proper spacing between signs should be maintained.
7. When flaggers are used to draw attention to traffic control devices, the FLAGGER symbol sign should be used. Proper spacing should be maintained.
8. When more than one flagger is used, a chief flagger should be assigned the responsibility of making decisions concerning traffic control.
9. The contractor has the option to use a flashing Stop/Slow Paddle conforming to Departmental Materials Specification D-9-8620.

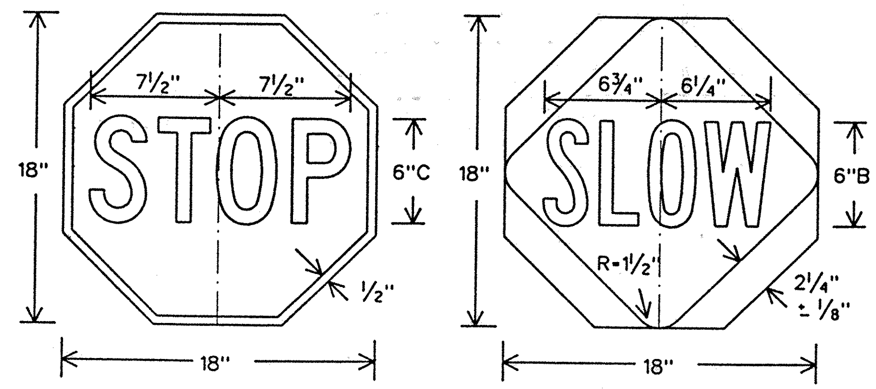

Background - Red
Legend & Border - White

Background - Orange
Legend & Border - Black

18" STOP-SLOW PADDLE

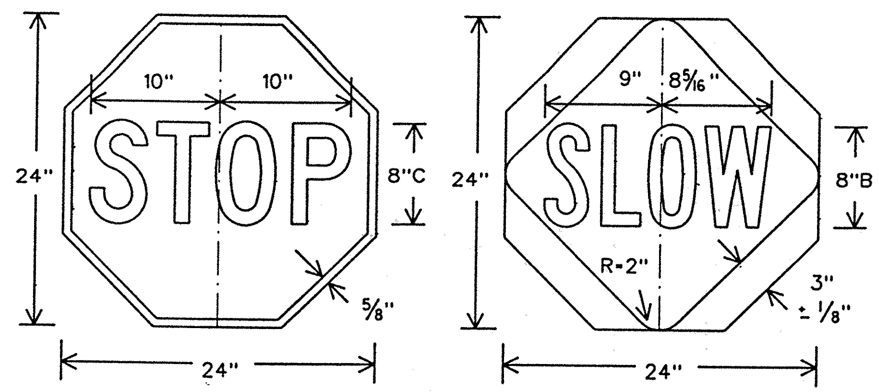

Background - Red
Legend & Border - White

Background - Orange
Legend & Border - Black

24" STOP-SLOW PADDLE

Only pre-qualified products shall be used. A list of compliant products and their sources may be obtained by writing or faxing:

Standards Engineer
Traffic Operations Division - TE
Texas Department of Transportation
125 East 11th Street
Austin, Texas 78701-2483
Phone (512) 416-3335
Fax (512) 416-3161
E-mail TRF-STANDARD@mailgw.dot.state.tx.us

Table I

TYPICAL CONSTRUCTION WARNING SIGN SIZE AND SPACING 1.5.6

Roadway Classi-fication	Posted Speed	Sign Spacing "X" ▲	Long-term Stationary Or Intermediate-term Stationary Approach Warning Signs CW20 Series And CW22-1 Sign		Short-term Stationary Or Short Duration Approach Warning Signs CW21 Series		Other Warning Signs
	MPH	Ft. (Apprx.)	Standard Inches	Minimum Inches [4]	Standard Inches [7]	Minimum Inches [4] [7]	Standard Inches [7]
Conven.	30	120	48X48	36X36	30X30 or 36x36	24X24 or 30x30	30X30 or 36x36
↓	35	160	↓	↓	↓	↓	↓
↓	40	240	↓	↓	↓	↓	↓
↓	45	320	↓	Use Standard Size	↓	Use Standard Size	↓
↓	50	400	↓		↓		↓
↓	55	500 [2]	↓		↓		↓
↓	60	600 [2]	↓		48x48		48x48
↓	65	700 [2]	↓		↓		↓
↓	70	800 [2]	↓		↓		↓
Exp or Frwy	*	* [3]	↓		* *	* *	* *

* For typical sign spacings on expressways and freeways, see TMUTCD typical appilcation diagrams or TCP Standard Sheets.

▲ Minimum distance from work area to 1st Advance Warning sign and/or distance between each additional sign.

* *Smaller sign sizes may be used where sign designs have not been included in the "Standard Highway Sign Design for Texas" manual.

General Notes:

1. Special or larger size signs may be used as may be necessary.
2. Distance between signs should be increased as required to have 1500' advance warning.
3. Distance between signs should be increased as required to have 1/2 mile or more advance warning.
4. For use only on secondary roads or city streets where speeds are low.
5. Only diamond shaped warning sign sizes are indicated.
6. See sign size listing in TMUTCD, Appendix A for complete list of all available sign design sizes.
7. Where two sizes are listed, see sign size listing in TMUTCD, Appendix A for proper size.

STANDARD PLANS
TEXAS DEPARTMENT OF TRANSPORTATION
Traffic Operations Division

TRAFFIC CONTROL PLAN

TCP NOTES-98

©TxDOT Feburary 1994 DN: MT | CK: | DW: DN | CK: DM | NEG NO.:

REVISIONS	STATE DISTRICT	FEDERAL REGION	FEDERAL AID PROJECT			SHEET
8-95 1-97 4-98	22	6	NH-99(462)			244
	COUNTY		CONTROL	SECTION	JOB	HIGHWAY
	WEBB		0018	06	131	IH35

DISCLAIMER
The use of this standard is governed by the "Texas Engineering Practice Act". No warranty of any kind is made by TxDOT for any purpose whatsoever. TxDOT assumes no responsibility for the conversion of this standard to other formats or for incorrect results or damages resulting from its use.

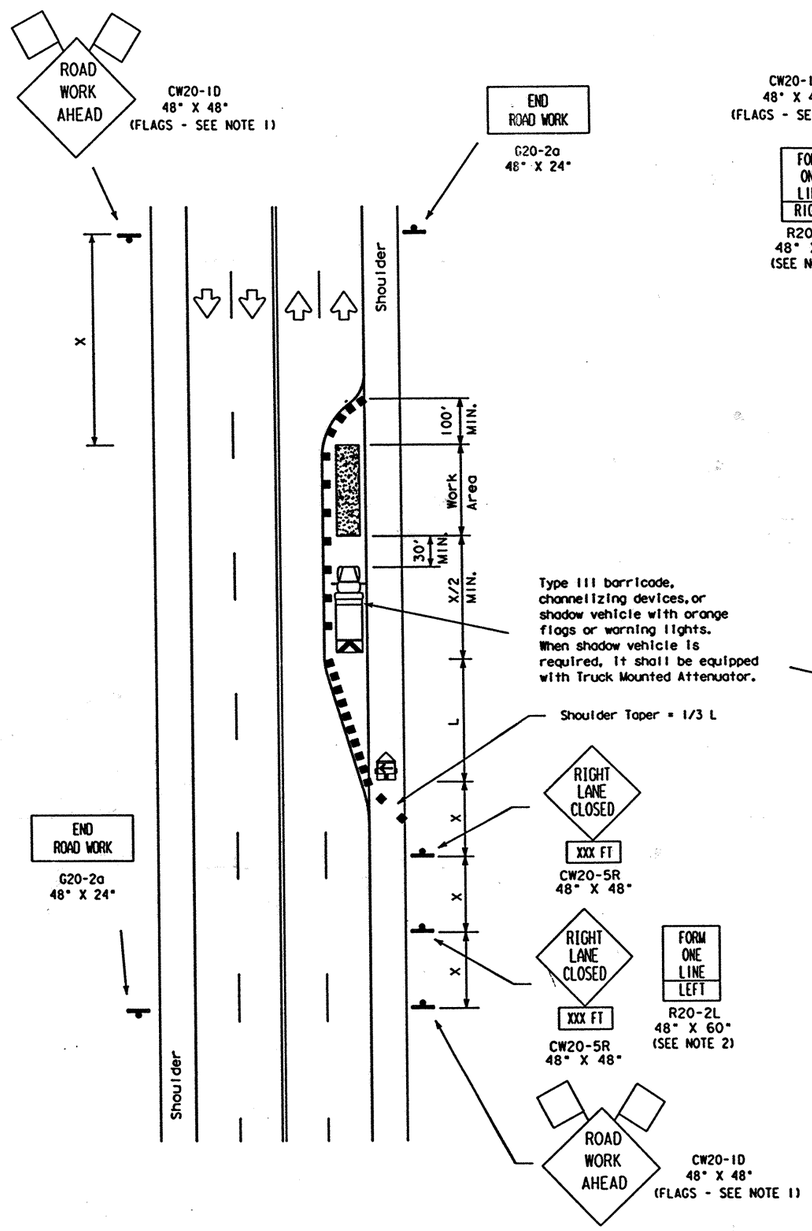

TCP (2-5a)
One Lane Closed
More Than Two Weeks

The requirement for shadow vehicles will be listed in the project GENERAL NOTES, item 502, Barricades, Signs and Traffic Handling.

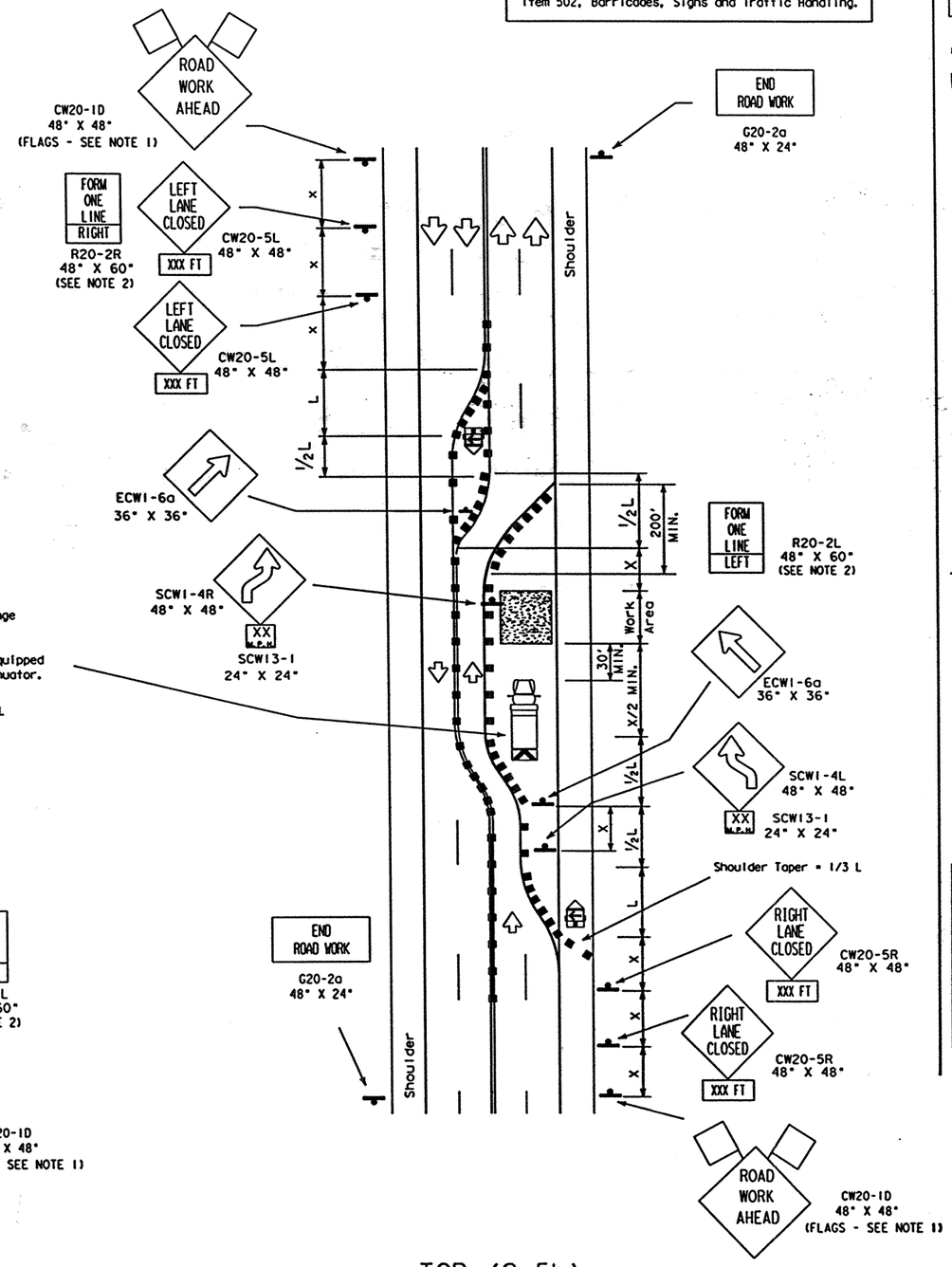

TCP (2-5b)
Two Lanes Closed
More Than Two Weeks

LEGEND

- Type III Barricade
- Channelizing Devices
- Flag
- Heavy Work Vehicle
- Truck Mounted Attenuator
- Trailer Mounted Flashing Arrow Panel
- Portable Changeable Message Sign
- Flagger
- Sign Post

Posted Speed ✱	Formula	Minimum Desirable Taper Lengths ✱✱ 10' Offset	11' Offset	12' Offset	Suggested Maximum Spacing of Device On a Taper	On a Tangent	Minimum Sign Spacing X Distance
30	$L = \frac{WS^2}{60}$	150'	165'	180'	30'	60'-75'	120'
35		205'	225'	245'	35'	70'-90'	160'
40		265'	295'	320'	40'	80'-100'	240'
45	L=WS	450'	495'	540'	45'	90'-110'	320'
50		500'	550'	600'	50'	100'-125'	400'
55		550'	605'	660'	55'	110'-140'	500'
60		600'	660'	720'	60'	120'-150'	✱ 600'
65		650'	715'	780'	65'	130'-165'	✱ 700'
70		700'	770'	840'	70'	140'-175'	✱ 800'

✱ Conventional Roads Only

✱✱ Taper lengths have been rounded off.
L=Length of Taper (FT.) W=Width of Offset (FT.) S=Posted Speed (MPH)

TYPICAL USAGE:				
MOBILE	SHORT DURATION	SHORT TERM STATIONARY	INTERMEDIATE TERM STATIONARY	LONG TERM STATIONARY
			✓	✓

GENERAL NOTES:

1. Unless otherwise stated in the plans, flags attached to signs are REQUIRED.
2. The FORM ONE LINE LEFT (or RIGHT) sign may be used following the RIGHT (or LEFT) LANE CLOSED XXX FT sign. Spacing distance between signs should be the minimum distance indicated.
3. When the work zone will be in place more than two weeks, conflicting pavement markings shall be removed. New markings shall be installed and maintained to the satisfaction of the Engineer.
4. Downstream taper is optional. When used, it should be 100' minimum length per lane.
5. See TCP (NOTES), CHANNELIZING DEVICES, note #2 for recommended 10 foot channelizing device spacing.

Only pre-qualified products shall be used. A list of compliant products and their sources may be obtained by writing or faxing:

Standards Engineer
Traffic Operations Division - TE
Texas Department of Transportation
125 East 11th Street
Austin, Texas 78701-2483
Phone (512) 416-3335
Fax (512) 416-3161
E-mail TRF-STANDARDemailgw.dot.state.tx.us

STANDARD PLANS
TEXAS DEPARTMENT OF TRANSPORTATION
Traffic Operations Division

TRAFFIC CONTROL PLAN

TCP (2-5)-98

©TxDOT December 1985 DN-LR | CK- | DN-DN | CK-MT | REC NO.-

REVISIONS	STATE DISTRICT	FEDERAL REGION	FEDERAL AID PROJECT	SHEET
2-94	22	6	NH 99 (462)	245
8-95	COUNTY		CONTROL / SECTION / JOB	HIGHWAY
1-97	WEBB		0018 / 06 / 131	IH35
4-98				

LEVELS DISPLAYED
DATE:
ACC:
FILE:
CK:

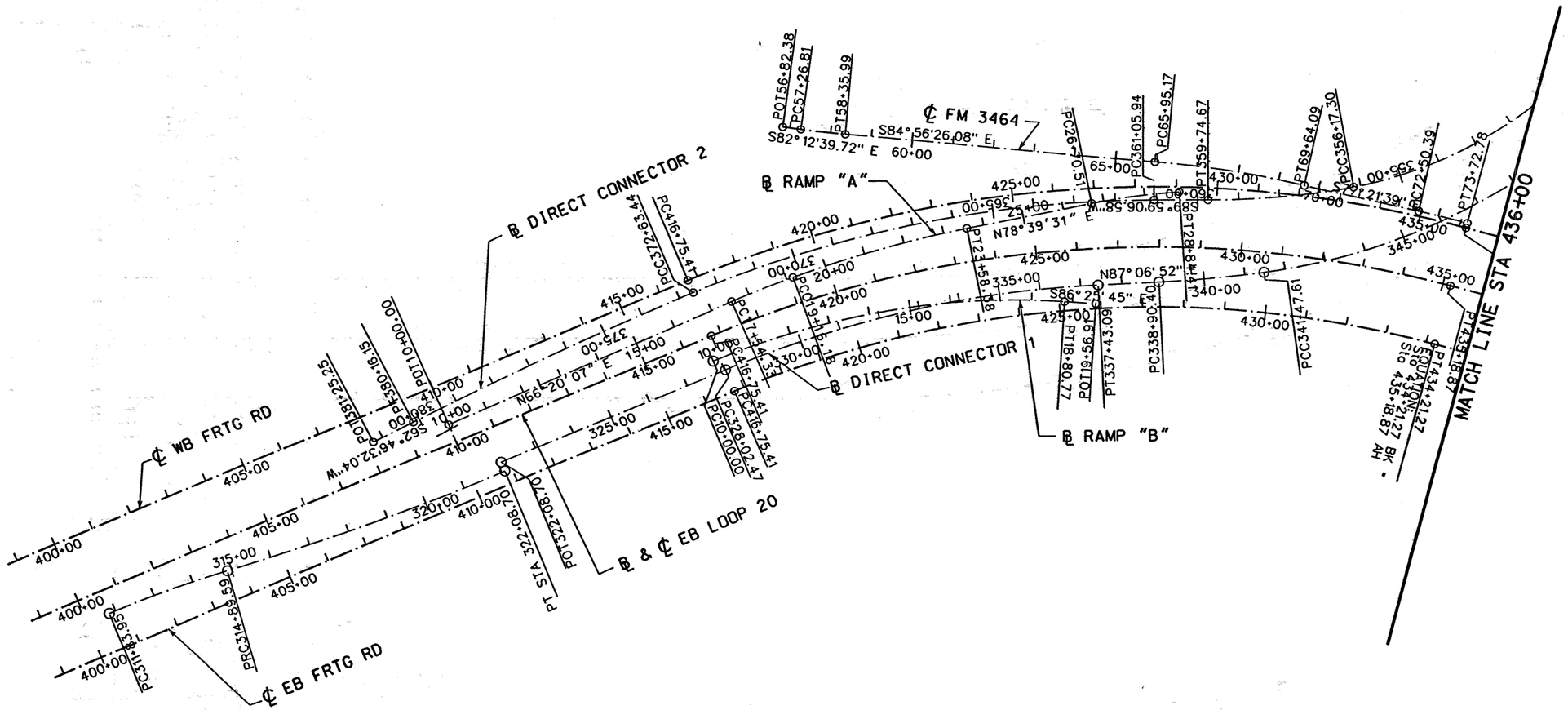

STATE OF TEXAS
DERRON S. VINCIK
84028
REGISTERED PROFESSIONAL ENGINEER

The seal appearing on this document was authorized by Derron S. Vincik P.E. 84028, on April 2, 1999.

Derron S. Vincik

DATE	BY	REV	REVISION

© 1999 Texas Department of Transportation

Brown & Root
HOUSTON, TEXAS

LOOP 20

HORIZONTAL ALIGNMENT PLAN

0 150 300
SCALE: 1" = 300'

SHEET 1 OF 5

FED RD DIV NO	STATE PROJECT NO		SHEET NO
6	C86-14-23		246
STATE	STATE DIST NO	COUNTY	
TEXAS	22	WEBB	
CONT	SECT	JOB	HIGHWAY NO
0086	14	023	LOOP 20

REF FILE(S): J01LDX01.AEG, ALG LV ON = 1-8,10-39,45-63
J01LDX01.BDR, BDR LV ON = 16,45,52,57,60-62

D01LDX01.DGN-05 03-12-99 BAR_HO_ES05 \HCIVIL\CF0039\PHASE2

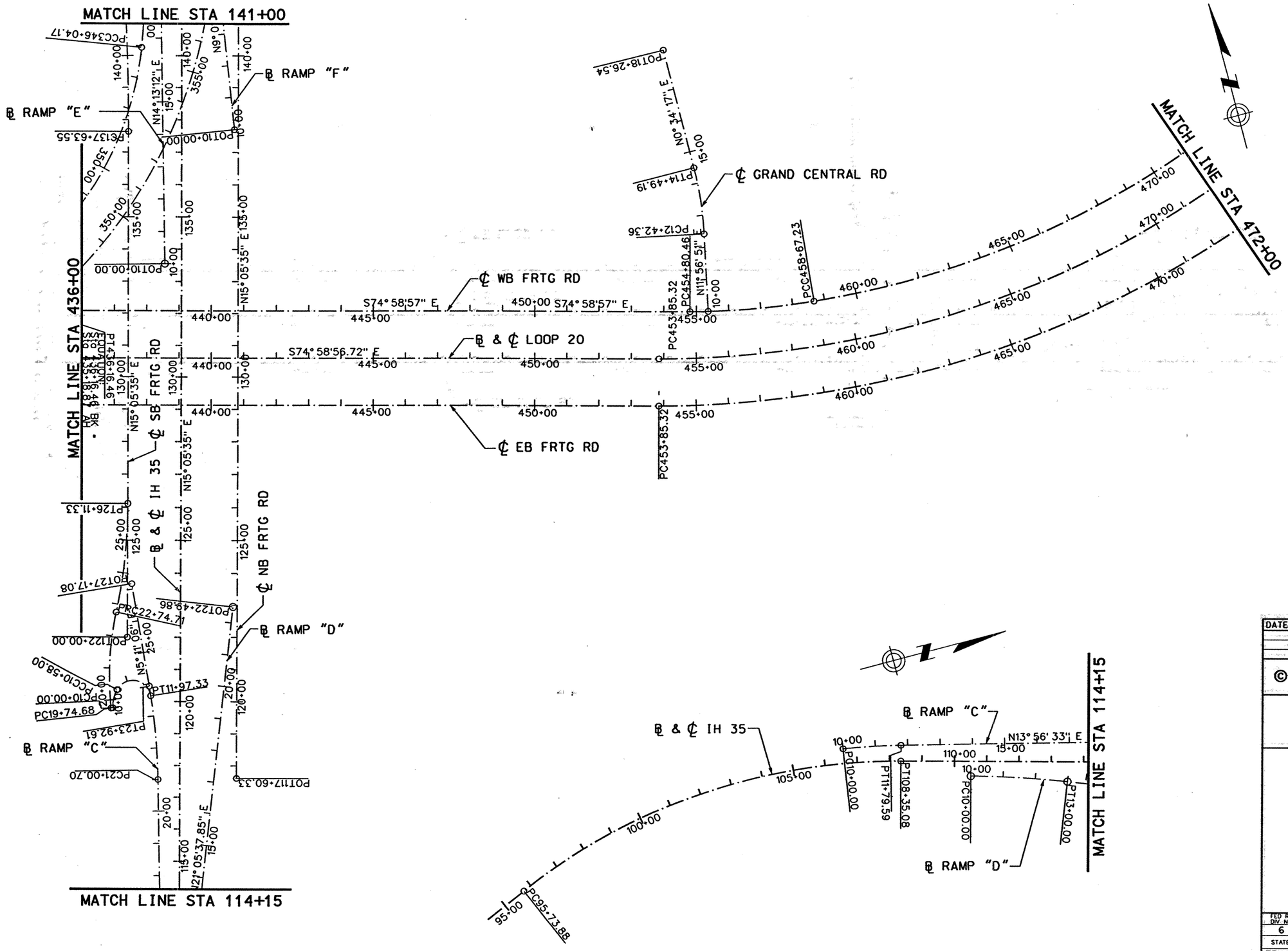

REF FILE(S): J01LOX01.ALG, ALG LV ON = 1-8,10-39,46-63
J01LOX01.BDR, BDR LV ON = 16,45,57,60-62

STATE OF TEXAS
DERRON S. VINCIK
84028
REGISTERED PROFESSIONAL ENGINEER

The seal appearing on this document was authorized by Derron S. Vincik P.E. 84028, on April 2, 1999.

Derron S. Vincik

DATE	BY	REV	REVISION

© 1999 Texas Department of Transportation

Brown & Root
HOUSTON, TEXAS

LOOP 20

HORIZONTAL ALIGNMENT PLAN

0 150 300
SCALE: 1" = 300'

SHEET 2 OF 5

FED RD DIV NO	STATE PROJECT NO		SHEET NO
6	C86-14-23		247
STATE	STATE DIST NO		COUNTY
TEXAS	22		WEBB
CONT	SECT	JOB	HIGHWAY NO
0086	14	023	LOOP 20

03-12-99 BAR_HO_ES05 \HCIVIL\CF0039\PHASE2
D01LOX02.DGN-04

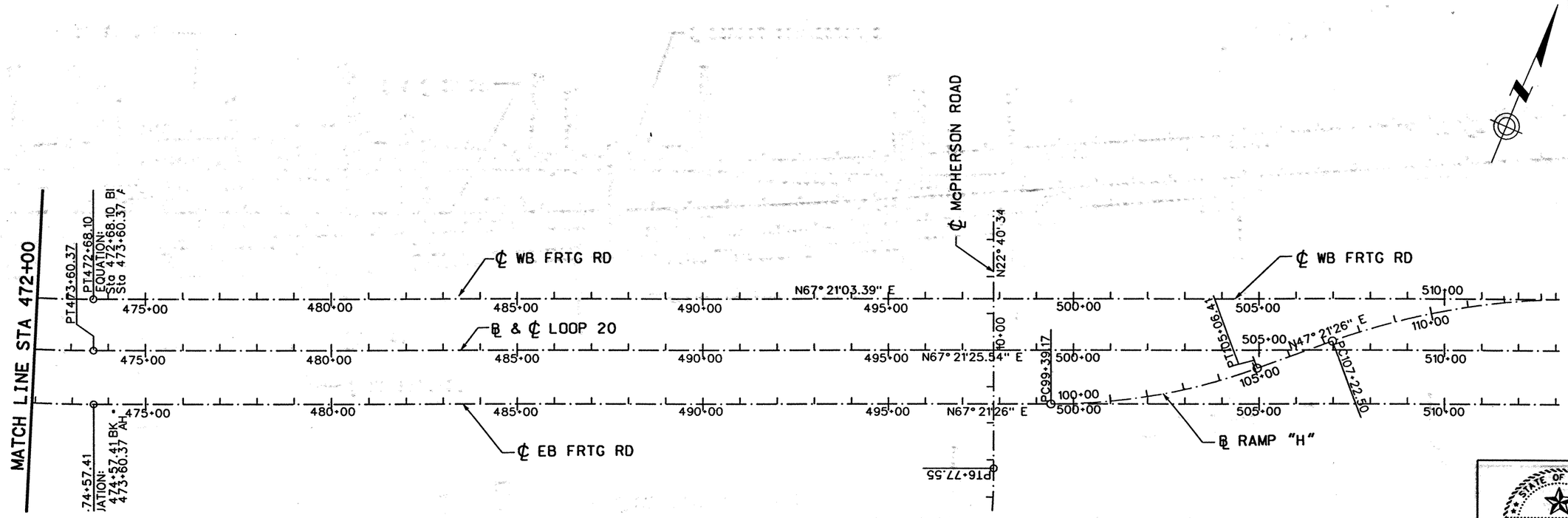

STATE OF TEXAS
DERRON S. VINCIK
84028
REGISTERED PROFESSIONAL ENGINEER

The seal appearing on this document was authorized by Derron S. Vincik P.E. 84028, on April 2, 1999.

Derron S. Vincik

DATE	BY	REV	REVISION

© 1999 Texas Department of Transportation

Brown & Root
HOUSTON, TEXAS

LOOP 20

HORIZONTAL ALIGNMENT PLAN

0 150 300
SCALE: 1" = 300'

SHEET 3 OF 5

FED RD DIV NO	STATE PROJECT NO		SHEET NO
6	C86-14-23		248
STATE	STATE DIST NO		COUNTY
TEXAS	22		WEBB
CONT	SECT	JOB	HIGHWAY NO
0086	14	023	LOOP 20

REF FILE(S): J01LOX01.ALG, ALG LV ON = 1-8,10-39,46-63
J01LOX01.BDR, BDR LV ON = 16,45,57,60-62

D01LOX03.DGN-05 03-12-99 BAR_HO_ES05 \HCIVIL\CF0039\PHASE2

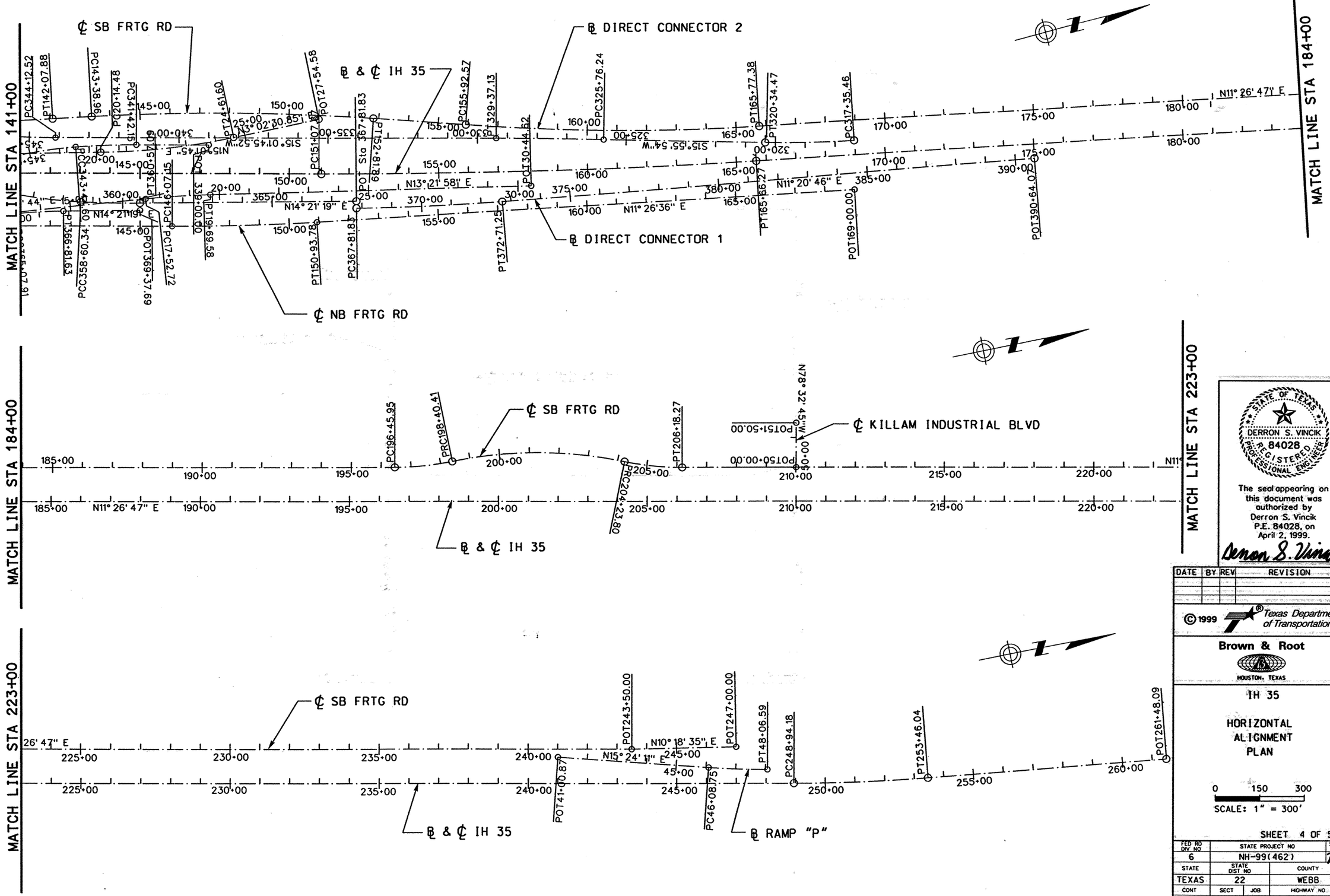

STATE OF TEXAS
DERRON S. VINCIK
84028
REGISTERED PROFESSIONAL ENGINEER

The seal appearing on this document was authorized by Derron S. Vincik P.E. 84028, on April 2, 1999.

Derron S. Vincik

DATE	BY	REV	REVISION

© 1999 Texas Department of Transportation

Brown & Root
HOUSTON, TEXAS

IH 35

HORIZONTAL ALIGNMENT PLAN

0 150 300
SCALE: 1" = 300'

SHEET 4 OF 5

FED RD DIV NO	STATE PROJECT NO		SHEET NO
6	NH-99(462)		249
STATE	STATE DIST NO		COUNTY
TEXAS	22		WEBB
CONT	SECT	JOB	HIGHWAY NO
0018	06	131	IH 35

D01LOX04.DGN-04 03-12-99 BAR_HO_ES05 \HCIVIL\CF0039\PHASE2

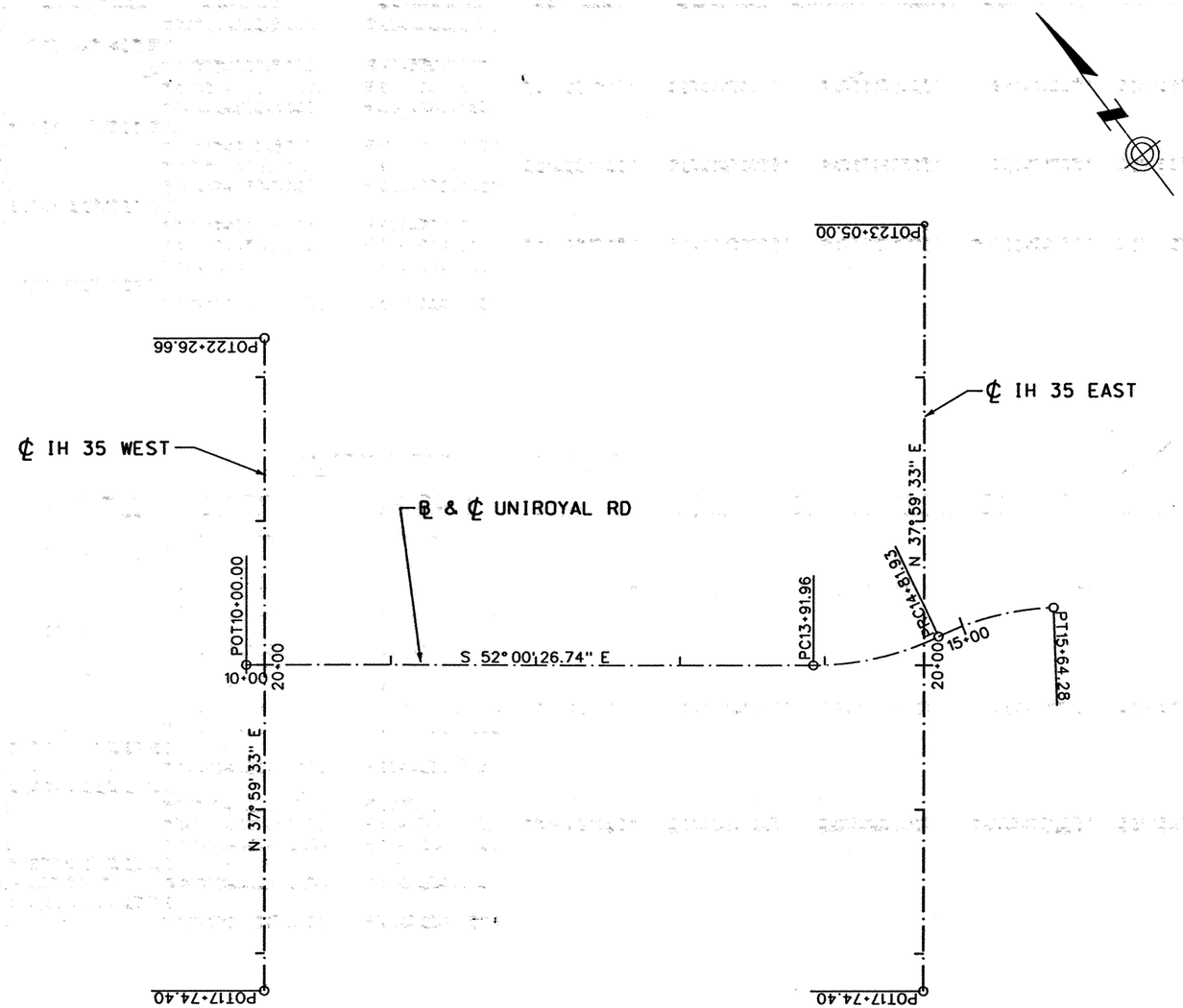

STATE OF TEXAS
DERRON S. VINCIK
84028
REGISTERED PROFESSIONAL ENGINEER

The seal appearing on this document was authorized by Derron S. Vincik P.E. 84028, on April 2, 1999.

Derron S. Vincik

DATE	BY	REV	REVISION

© 1999 Texas Department of Transportation

Brown & Root
HOUSTON, TEXAS

IH 35

HORIZONTAL ALIGNMENT PLAN

0 50 100
SCALE: 1" = 100'

SHEET 5 OF 5

FED RD DIV NO	STATE PROJECT NO	SHEET NO
6	NH-99(462)	250

STATE	STATE DIST NO	COUNTY
TEXAS	22	WEBB

CONT	SECT	JOB	HIGHWAY NO
		131	IH 35

REF FILE(S): J01LOX01.ALG, ALG LV ON = 1-63
J01LOX01.BDR, BDR LV ON = 15,45,57,60-62

D01LOX05.DGN-05 03-12-99 BAR_HO_ES05 \HCIVIL\CF0039\PHASE2

LOOP 20 MAINLANES

DESCRIPTION		STATION	BEARING	NORTHING	EASTING	DEGREE	RADIUS	CURVE LENGTH	TANGENT	DEFLECTION
	POT	328+08.33		17,108,953.3981	651,759.5315					
			S 75° 44′ 43″ E							
	PC	334+47.76		17,108,795.9508	652,379.2681					
LP20H1	PI	343+83.88		17,108,565.4462	653,286.5694	2° 03′ 16″	2,788.7083′	1,806.3266′	936.1239′	37° 06′ 44″ LT
	PT	352+54.08		17,108,929.0734	654,149.1836					
			N 67° 08′ 33″ E							
	PC	416+75.41		17,111,423.3692	660,066.2743					
LP20H2	PI	426+32.24		17,111,795.0385	660,947.9665	2° 03′ 16″	2,788.7083′	1,843.4570′	956.8277′	37° 52′ 30″ RT
	PT	435+18.87		17,111,547.1097	661,872.1150					
			S 74° 58′ 57″ E							
	PC	453+85.32		17,111,063.4840	663,674.8184					
LP20H3	PI	464+10.00		17,110,797.9725	664,664.5060	1° 54′ 25″	3,004.7906′	1,975.0472′	1,024.6843′	37° 39′ 38″ LT
	PT	473+60.37		17,111,192.4622	665,610.2099					
			N 67° 21′ 26″ E							
	POT	524+41.44		17,113,148.6070	670,299.6450					

LOOP 20 EASTBOUND FRONTAGE RD

DESCRIPTION		STATION	BEARING	NORTHING	EASTING	DEGREE	RADIUS	CURVE LENGTH	TANGENT	DEFLECTION
	POT	328+08.33		17,108,810.3059	651,723.1782					
			S 75° 44′ 43″ E							
	PC	334+47.76		17,108,652.8581	652,342.9205					
EBH1	PI	344+33.44		17,108,410.1522	653,298.2534	1° 57′ 05″	2,936.3458′	1,901.9515′	985.6811′	37° 06′ 43″ LT
	PT	353+49.71		17,108,793.0293	654,206.5333					
			N 67° 08′ 33″ E							
EQN: STA 353+49.71 (BK) = STA 352+54.08 (AH)				17,108,793.0293	654,206.5333					
			N 67° 08′ 33″ E							
	PC	416+75.41		17,111,287.3247	660,123.6238					
EBH2	PI	425+81.58		17,111,639.3173	660,958.6381	2° 10′ 10″	2,641.0708′	1,745.8621′	906.1720′	37° 52′ 30″ RT
	PT	434+21.27		17,111,404.5142	661,833.8610					
			S 74° 58′ 57″ E							
EQN: STA 434+21.27 (BK) = STA 435+18.87 (AH)				17,111,404.5142	661,833.8610					
			S 74° 58′ 57″ E							
	PC	453+85.32		17,110,920.8886	663,636.5637					
EBH3	PI	464+60.35		17,110,642.3315	664,674.8787	1° 49′ 03″	3,152.4281′	2,072.0894′	1,075.0313′	37° 39′ 38″ LT
	PT	474+57.41		17,111,056.2041	665,667.0489					
			N 67° 21′ 26″ E							
EQN: STA 474+57.41 (BK) = STA 473+60.37 (AH)				17,111,056.2041	665,667.0489					
			N 67° 21′ 26″ E							
	POT	524+41.44		17,113,012.3490	670,356.4834					

STATE OF TEXAS
DERRON S. VINCIK
84028
REGISTERED PROFESSIONAL ENGINEER

The seal appearing on this document was authorized by Derron S. Vincik P.E. 84028, on April 2, 1999.

Derron S. Vincik

DATE	BY	REV	REVISION

© 1999 Texas Department of Transportation

Brown & Root
HOUSTON, TEXAS

LOOP 20

GEOMETRIC DATA SUMMARY

SHEET 1 OF 7

FED RD DIV NO	STATE PROJECT NO		SHEET NO
6	C86-14-23		251
STATE	STATE DIST NO	COUNTY	
TEXAS	22	WEBB	
CONT	SECT	JOB	HIGHWAY NO
0086	14	023	LOOP 20

REF FILE(S): J01LDX01.BDR, BDR LV ON = 16.45.46.57.60-62

03-13-99 BAR_HO_ES05 \HCIVIL\CF0039\PHASE2

D01GDX01.DGN-03

LOOP 20 WESTBOUND FRONTAGE RD

DESCRIPTION		STATION	BEARING	NORTHING	EASTING	DEGREE	RADIUS	CURVE LENGTH	TANGENT	DEFLECTION
	POT	328+08.33		17,109,096.4897	651,795.8847					
			S 75° 44′ 43″ E							
	PC	334+47.76		17,108,939.0422	652,415.6219					
WBH1	PI	343+34.32		17,108,720.7408	653,274.8896	2° 10′ 10″	2,641.0708′	1,710.6976′	886.5644′	37° 06′ 44″ LT
	PT	351+58.46		17,109,065.1171	654,091.8360					
			N 67° 08′ 33″ E							
EQN: STA 351+58.46 (BK) = STA 352+54.08 (AH)				17,109,065.1171	654,091.8360					
			N 67° 08′ 33″ E							
	PC	416+75.41		17,111,559.4130	660,008.9268					
WBH2	PI	426+82.90		17,111,950.7590	660,937.2969	1° 57′ 05″	2,936.3458′	1,941.0520′	1,007.4834′	37° 52′ 30″ RT
	PT	436+16.46		17,111,689.7045	661,910.3711					
			S 74° 58′ 57″ E							
EQN: STA 436+16.46 (BK) = STA 435+18.87 (AH)				17,111,689.7045	661,910.3711					
			S 74° 58′ 57″ E							
	PC	454+80.46		17,111,181.4259	663,804.9665					
WBH3	PI	456+74.30		17,111,131.1983	663,992.1887	2° 29′ 41″	2,296.5833′	386.7685′	193.8426′	9° 38′ 57″ LT
	PT	458+67.23		17,111,113.0626	664,185.1811					
			S 84° 37′ 54″ E							
	PC	458+67.23		17,111,113.0626	664,185.1811					
WBH4	PI	465+81.96		17,111,046.1928	664,896.7814	2° 00′ 00″	2,864.7899′	1,400.8722′	714.7353′	28° 01′ 03″ LT
	PT	472+68.10		17,111,321.4271	665,556.3970					
			N 67° 21′ 03″ E							
EQN: STA 472+68.10 (BK) = STA 473+60.37 (AH)				17,111,321.4271	665,556.3970					
			N 67° 21′ 03″ E							
	POT	524+41.46		17,113,278.0814	670,245.6362					

IH35 MAINLANES

DESCRIPTION		STATION	BEARING	NORTHING	EASTING	DEGREE	RADIUS	CURVE LENGTH	TANGENT	DEFLECTION
	POT	45+73.83		17,103,480.1827	663,757.5668					
			N 23° 32′ 58″ W							
	PC	95+73.88		17,108,063.8089	661,759.8471					
IH35H-1	PI	102+29.52		17,108,664.8443	661,497.8929	3° 03′ 50″	1,870.0000′	1,261.1943′	655.6398′	38° 38′ 32″ RT
	PT	108+35.08		17,109,297.8678	661,668.6115					
			N 15° 05′ 34″ E							
	PC	151+07.66		17,113,423.0679	662,781.1267					
IH35H-2	PI	158+37.22		17,114,127.4580	662,971.0920	0° 15′ 00″	22,918.3120′	1,458.6198′	729.5562′	3° 38′ 48″ LT
	PT	165+66.28		17,114,842.5040	663,115.8725					
			N 11° 26′ 47″ E							
	PC	248+94.18		17,123,004.7747	664,768.5461					
IH35H-3	PI	251+20.23		17,123,226.3250	664,813.4050	1° 00′ 00″	5,729.5780′	451.8580′	226.0462′	4° 31′ 07″ LT
	PT	253+46.04		17,123,450.7208	664,840.6702					
			N 6° 55′ 40″ E							
	POT	261+48.09		17,124,246.9090	664,937.4110					

STATE OF TEXAS
DERRON S. VINCIK
84028
REGISTERED PROFESSIONAL ENGINEER

The seal appearing on this document was authorized by Derron S. Vincik P.E. 84028, on April 2, 1999.

Derron S. Vincik

DATE	BY	REV	REVISION

© 1999 Texas Department of Transportation

Brown & Root
HOUSTON, TEXAS

LOOP 20

GEOMETRIC DATA SUMMARY

SHEET 2 OF 7

FED RD DIV NO	STATE PROJECT NO		SHEET NO
6	C86-14-23		152
STATE	STATE DIST NO	COUNTY	
TEXAS	22	WEBB	
CONT	SECT	JOB	HIGHWAY NO
0086	14	023	LOOP 20

REF FILE(S): J01LOX01.BDR, BDR LV ON = 16,45,46,57,60-62

03-13-99 BAR_HO_ES05 \HCIVIL\CF0039\PHASE2

D01GDX02.DGN-04

IH35 NORTHBOUND FRONTAGE RD

DESCRIPTION		STATION	BEARING	NORTHING	EASTING	DEGREE	RADIUS	CURVE LENGTH	TANGENT	DEFLECTION
	POT	117+60.33		17,110,145.6400	662,078.4990					
			N 15° 05′ 35″ E							
	PC	146+07.15		17,112,894.2569	662,819.7725					
NBH-1	PI	148+50.55		17,113,129.2550	662,883.1490	0° 45′ 00″	7,639.4370′	486.6235′	243.3941′	3° 38′ 59″ LT
	PT	150+93.78		17,113,367.8107	662,931.4380					
			N 11° 26′ 36″ E							
	POT	169+00.00		17,115,138.1340	663,289.7910					

IH35 SOUTHBOUND FRONTAGE RD

DESCRIPTION		STATION	BEARING	NORTHING	EASTING	DEGREE	RADIUS	CURVE LENGTH	TANGENT	DEFLECTION
	POT	122+00.00		17,110,658.6710	661,864.7110					
			N 15° 05′ 35″ E							
	PC	137+63.55		17,112,168.2885	662,271.8398					
SBH-1	PI	139+85.78		17,112,382.8500	662,329.7048	0° 45′ 00″	7,639.4373′	444.3294′	222.2274′	3° 19′ 57″ LT
	PT	142+07.88		17,112,600.4124	662,374.9996					
			N 11° 45′ 38″ E							
	PC	143+38.96		17,112,728.7406	662,401.7165					
SBH-2	PI	148+11.02		17,113,190.8930	662,497.9330	0° 45′ 00″	7,639.4373′	942.9250′	472.0619′	7° 04′ 19″ RT
	PT	152+81.89		17,113,637.6838	662,650.3157					
			N 18° 49′ 57″ E							
	PC	155+92.57		17,113,931.7379	662,750.6059					
SBH-3	PI	160+85.66		17,114,398.4284	662,909.7755	0° 45′ 00″	7,639.4370′	984.8084′	493.0872′	7° 23′ 10″ LT
	PT	165+77.38		17,114,881.7085	663,007.6293					
			N 11° 26′ 47″ E							
	PC	196+45.95		17,117,889.2428	663,616.5902					
SBH-4	PI	197+43.52		17,117,984.8719	663,635.9530	6° 00′ 00″	954.9300′	194.4645′	97.5697′	11° 40′ 04″ LT
	PRC	198+40.41		17,118,082.4408	663,635.5759					
			N 0° 13′ 17″ W							
	PRC	198+40.41		17,118,082.4408	663,635.5759					
SBH-5	PI	201+36.21		17,118,378.2342	663,634.4326	4° 00′ 00″	1,432.3910′	583.3908′	295.7956′	23° 20′ 08″ RT
	PRC	204+23.80		17,118,650.2846	663,750.5517					
			N 23° 06′ 51″ E							
	PRC	204+23.80		17,118,650.2846	663,750.5517					
SBH-6	PI	205+21.38		17,118,740.0249	663,788.8555	6° 00′ 00″	954.9480′	194.4712′	97.5730′	11° 40′ 05″ LT
	PT	206+18.27		17,118,835.6573	663,808.2187					
			N 11° 26′ 46″ E							
	POT	243+50.00		17,122,493.1640	664,548.7710					
			N 10° 18′ 35″ E							
	POT	247+00.00		17,122,837.5130	664,611.4100					

STATE OF TEXAS
DERRON S. VINCIK
84028
REGISTERED PROFESSIONAL ENGINEER

The seal appearing on this document was authorized by Derron S. Vincik P.E. 84028, on April 2, 1999.

Derron S. Vincik

DATE	BY	REV	REVISION

© 1999 Texas Department of Transportation

Brown & Root
HOUSTON, TEXAS

LOOP 20

GEOMETRIC DATA SUMMARY

SHEET 3 OF 7

FED RD DIV NO	STATE PROJECT NO		SHEET NO
6	C86-14-23		253
STATE	STATE DIST NO	COUNTY	
TEXAS	22	WEBB	
CONT	SECT	JOB	HIGHWAY NO
0086	14	023	LOOP 20

REF FILE(S): J01LOX01.BDR. BDR LV ON = 16.45.46.57.60-62

D01GDX03.DGN-04 03-13-99 BAR_HO_ES05 \HCIVIL\GF0039\PHASE2

DIRECT CONNECTOR # 1

DESCRIPTION		STATION	BEARING	NORTHING	EASTING	DEGREE	RADIUS	CURVE LENGTH	TANGENT	DEFLECTION
	PC	311+83.95		17,110,741.9548	658,599.3280					
DC1-1	PI	313+36.92		17,110,801.3739	658,740.2852	2° 03′ 16″	2,788.7083′	305.6321′	152.9692′	6° 16′ 46″ RT
	PRC	314+89.59		17,110,845.0191	658,886.8958					
			N 73° 25′ 19″ E							
	PRC	314+89.59		17,110,845.0191	658,886.8958					
DC1-2	PI	318+49.50		17,110,947.7105	659,231.8517	0° 52′ 23″	6,561.7377′	719.1130′	359.9168′	6° 16′ 45″ LT
	PT	322+08.70		17,111,087.5146	659,563.5065					
			N 67° 08′ 34″ E							
SHIFT: 24′ (RT) STA		322+08.70		17,111,109.6290	659,554.1820					
			N 67° 08′ 35″ E							
	PC	328+02.47		17,111,340.2690	660,101.3268					
DC1-3	PI	332+77.60		17,111,524.8252	660,539.1474	2° 07′ 24″	2,698.5196′	940.6177′	475.1293′	19° 58′ 17″ RT
	PT	337+43.09		17,111,548.7440	661,013.6742					
			N 87° 06′ 52″ E							
	PC	338+90.40		17,111,556.1599	661,160.7976					
DC1-4	PI	340+19.08		17,111,562.6380	661,289.3172	1° 52′ 43″	3,050.0000′	257.2129′	128.6827′	4° 49′ 55″ LT
	PCC	341+47.61		17,111,579.9186	661,416.8343					
			N 82° 16′ 57″ E							
	PCC	341+47.61		17,111,579.9186	661,416.8343					
DC1-5	PI	351+07.00		17,111,708.7540	662,367.5395	3° 45′ 26″	1,525.0044′	1,712.7299′	959.3951′	64° 20′ 56″ LT
	PCC	358+60.34		17,112,621.5352	662,662.9536					
			N 17° 56′ 01″ E							
	PCC	358+60.34		17,112,621.5352	662,662.9536					
DC1-6	PI	359+58.74		17,112,715.1599	662,693.2544	1° 49′ 08″	3,150.0991′	196.7478′	98.4059′	3° 34′ 43″ LT
	PT	360+57.09		17,112,810.4933	662,717.6524					
			N 14° 21′ 19″ E							
SHIFT: 24′ (RT) STA		367+81.83		17,113,512.6100	662,897.3400					
			N 14° 21′ 19″ E							
	PC	367+81.83		17,113,506.6570	662,920.5897					
DC1-7	PI	370+26.64		17,113,743.8230	662,981.2855	0° 49′ 09″	6,994.8000′	489.4192′	244.8095′	4° 00′ 32″ LT
	PT	372+71.25		17,113,984.6520	663,025.2520					
			N 10° 20′ 46″ E							
	POT	390+64.07		17,115,748.3260	663,347.2360					

DIRECT CONNECTOR #2

DESCRIPTION		STATION	BEARING	NORTHING	EASTING	DEGREE	RADIUS	CURVE LENGTH	TANGENT	DEFLECTION
	PC	317+35.46		17,115,177.5207	663,135.7527					
DC2-1	PI	318+85.04		17,115,030.9140	663,106.0680	1° 30′ 00″	3,819.7190′	299.0107′	149.5817′	4° 29′ 07″ RT
	PT	320+34.47		17,114,887.0777	663,065.0095					
			S 15° 55′ 54″ W							
	PC	325+76.24		17,114,366.1174	662,916.2997					
DC2-2	PI	327+56.69		17,114,192.5988	662,866.7683	0° 15′ 00″	22,918.0000′	360.8918′	180.4496′	0° 54′ 08″ LT
	PT	329+37.13		17,114,018.3218	662,819.9753					
			S 15° 01′ 46″ W							
	PC	344+12.52		17,112,593.3982	662,437.3868					
DC2-3	PI	345+08.42		17,112,500.7793	662,412.5188	2° 54′ 38″	1,968.5000′	191.6471′	95.8993′	5° 34′ 41″ RT
	PCC	346+04.17		17,112,411.0162	662,378.7658					
			S 20° 36′ 27″ W							
	PCC	346+04.17		17,112,411.0162	662,378.7658					
DC2-4	PI	351+60.77		17,111,890.0281	662,182.8619	5° 49′ 16″	984.2684′	1,013.1367′	556.6030′	58° 58′ 34″ RT
	PCC	356+17.31		17,111,789.3949	661,635.4317					
			S 79° 35′ 01″ W							
	PCC	356+17.31		17,111,789.3949	661,635.4317					
DC2-5	PI	357+96.48		17,111,757.0004	661,459.2103	2° 54′ 38″	1,968.5140′	357.3637′	179.1742′	10° 24′ 05″ RT
	PT	359+74.67		17,111,756.9540	661,280.0361					
			S 89° 59′ 07″ W							
	PC	361+05.95		17,111,756.9200	661,148.7604					
DC2-6	PI	366+92.48		17,111,756.7681	660,562.2243	1° 58′ 25″	2,903.2761′	1,157.4927′	586.5361′	22° 50′ 35″ LT
	PCC	372+63.44		17,111,528.9308	660,021.7478					
			S 67° 08′ 32″ W							
	PCC	372+63.44		17,111,528.9308	660,021.7478					
DC2-7	PI	376+39.98		17,111,382.6654	659,674.7766	0° 34′ 48″	9,876.5418′	752.7159′	376.5402′	4° 22′ 00″ LT
	PT	380+16.16		17,111,210.4067	659,339.9491					
			S 62° 46′ 32″ W							
	POT	381+25.25		17,111,160.4990	659,242.9410					

STATE OF TEXAS
DERRON S. VINCIK
84028
REGISTERED PROFESSIONAL ENGINEER

The seal appearing on this document was authorized by Derron S. Vincik P.E. 84028, on April 2, 1999.

Derron S. Vinci

DATE	BY	REV	REVISION

© 1999 Texas Department of Transportation

Brown & Root
HOUSTON, TEXAS

LOOP 20

GEOMETRIC DATA
SUMMARY

SHEET 4 OF 7

FED RD DIV NO	STATE PROJECT NO		SHEET NO
6	C86-14-23		254
STATE	STATE DIST NO		COUNTY
TEXAS	22		WEBB
CONT	SECT	JOB	HIGHWAY NO
0086	14	023	LOOP 20

D01GDX04.DGN-03 02-05-99 BAR_HO_ES05 \HCIVIL\CF0039\PHASE2

RAMP "A" BASELINE

DESCRIPTION		STATION	BEARING	NORTHING	EASTING	DEGREE	RADIUS	CURVE LENGTH	TANGENT	DEFLECTION
	POT	10+00.00		17,111,204.3220	659,425.6420					
			N 66° 20′ 07″ E							
	PC	17+54.33		17,111,507.0957	660,116.5365					
AH-1	PI	18+35.28		17,111,539.5879	660,190.6800	2° 08′ 31″	2,675.0000′	161.8518′	80.9506′	3° 28′ 00″ RT
	PCC	19+16.18		17,111,567.5373	660,266.6525					
			N 69° 48′ 07″ E							
	PCC	19+16.18		17,111,567.5373	660,266.6525					
AH-2	PI	21+37.72		17,111,644.0289	660,474.5731	2° 00′ 10″	2,860.7337′	442.2062′	221.5444′	8° 51′ 24″ RT
	PT	23+58.38		17,111,687.5963	660,691.7914					
			N 78° 39′ 31″ E							
	PC	26+70.51		17,111,748.9762	660,997.8247					
AH-3	PI	27+77.61		17,111,770.0374	661,102.8329	3° 27′ 58″	1,653.0220′	213.9000′	107.0995′	7° 24′ 51″ RT
	PT	28+84.41		17,111,777.3725	661,209.6809					
			N 86° 04′ 22″ E							

RAMP "B" BASELINE

DESCRIPTION		STATION	BEARING	NORTHING	EASTING	DEGREE	RADIUS	CURVE LENGTH	TANGENT	DEFLECTION
	PC	10+00.00		17,111,361.3933	660,071.1421					
BH1	PI	14+48.36		17,111,535.5540	660,484.2946	3° 00′ 00″	1,909.8593′	880.7713′	448.3603′	26° 25′ 23″ RT
	PT	18+80.77		17,111,507.6690	660,931.7870					
			S 86° 26′ 03″ E							
	POT	19+56.91		17,111,502.9270	661,007.7770					

RAMP "C" BASELINE

DESCRIPTION		STATION	BEARING	NORTHING	EASTING	DEGREE	RADIUS	CURVE LENGTH	TANGENT	DEFLECTION
	PC	10+00.00		17,109,134.7179	661,585.6608					
CH1	PI	10+89.86		17,109,223.5670	661,599.0937	2° 58′ 35″	1,925.0000′	179.5873′	89.8588′	5° 20′ 43″ RT
	PT	11+79.59		17,109,310.7784	661,620.7451					
			N 13° 56′ 33″ E							
	PC	21+00.70		17,110,204.7494	661,842.6856					
CH2	PI	22+46.94		17,110,346.6842	661,877.9229	3° 00′ 00″	1,909.8593′	291.9172′	146.2434′	8° 45′ 27″ LT
	PT	23+92.61		17,110,492.3292	661,891.1393					
			N 5° 11′ 06″ E							
	POT	27+17.08		17,110,815.4670	661,920.4620					

RAMP "D" BASLINE

DESCRIPTION		STATION	BEARING	NORTHING	EASTING	DEGREE	RADIUS	CURVE LENGTH	TANGENT	DEFLECTION
	PC	10+00.00		17,109,494.1615	661,770.2330					
DH1	PI	11+50.14		17,109,639.1179	661,809.3287	2° 00′ 00″	2,864.7890′	299.9977′	150.1361′	6° 00′ 00″ RT
	PT	13+00.00		17,109,779.1937	661,863.3621					
			N 21° 05′ 38″ E							
	POT	22+49.86		17,110,665.4070	662,205.2140					

RAMP "E" BASELINE

DESCRIPTION		STATION	BEARING	NORTHING	EASTING	DEGREE	RADIUS	CURVE LENGTH	TANGENT	DEFLECTION
	POT	10+00.00		17,111,744.4060	662,274.5590					
			N 14° 13′ 12″ E							
	PC	20+14.48		17,112,727.7988	662,523.7607					
EH1	PI	22+38.75		17,112,945.2005	662,578.8525	2° 30′ 00″	2,291.8310′	447.1234′	224.2735′	11° 10′ 41″ LT
	PT	24+61.60		17,113,169.1580	662,590.7539					
			N 3° 02′ 31″ E							
	POT	27+54.58		17,113,461.7210	662,606.3010					

STATE OF TEXAS
DERRON S. VINCIK
84028
REGISTERED PROFESSIONAL ENGINEER

The seal appearing on this document was authorized by Derron S. Vincik P.E. 84028, on April 2, 1999.

Derron S. Vincik

DATE	BY	REV	REVISION

© 1999 Texas Department of Transportation

Brown & Root
HOUSTON, TEXAS

LOOP 20

GEOMETRIC DATA SUMMARY

SHEET 5 OF 7

FED RD DIV NO	STATE PROJECT NO		SHEET NO
6	C86-14-23		255
STATE	STATE DIST NO	COUNTY	
TEXAS	22	WEBB	
CONT	SECT	JOB	HIGHWAY NO
0086	14	023	LOOP 20

REF FILE(S): J01LOX01.BDR, BDR LV ON = 16,45,46,57,60-62

D01GDX05.DGN-03 02-05-99 BAR_HO_ES05 \HCIVIL\CF0039\PHASE2

RAMP "F" BASE LINE

DESCRIPTION		STATION	BEARING	NORTHING	EASTING	DEGREE	RADIUS	CURVE LENGTH	TANGENT	DEFLECTION
	POT	10+00.00		17,112,089.2850	662,590.2510					
			N 9° 01′ 44″ E							
	PC	17+52.72		17,112,832.6808	662,708.3781					
FH-1	PI	18+61.20		17,112,939.8155	662,725.4020	2° 00′ 00″	2,864.7890′	216.8542′	108.4789′	4° 20′ 13″ RT
	PT	19+69.58		17,113,045.3560	662,750.4791					
			N 13° 21′ 58″ E							
	POT	30+44.62		17,114,091.2810	662,998.9980					

TEMPORARY RAMP "H" BASELINE

DESCRIPTION		STATION	BEARING	NORTHING	EASTING	DEGREE	RADIUS	CURVE LENGTH	TANGENT	DEFLECTION
	PC	99+39.17		17,112,049.0093	668,047.0835					
HH1	PI	102+25.70		17,112,159.3211	668,311.5328	3° 31′ 33″	1,625.0220′	567.2387′	286.5347′	20° 00′ 00″ LT
	PT	105+06.41		17,112,353.4272	668,522.3052					
			N 47° 21′ 26″ E							
	PC	107+22.50		17,112,499.8117	668,681.2585					
HH2	PI	110+61.27		17,112,729.3021	668,930.4533	2° 58′ 53″	1,921.8590′	670.6470′	338.7682′	19° 59′ 38″ RT
	PT	113+93.15		17,112,859.7568	669,243.0960					
			N 67° 21′ 03″ E							

RAMP "M" BASELINE

DESCRIPTION		STATION	BEARING	NORTHING	EASTING	DEGREE	RADIUS	CURVE LENGTH	TANGENT	DEFLECTION
	PC	19+74.68		17,110,457.6989	661,759.7772					
MH-1	PI	21+25.94		17,110,607.1501	661,783.1084	6° 00′ 00″	954.9237′	300.0300′	151.2614′	18° 00′ 07″ RT
	PRC	22+74.71		17,110,742.0746	661,851.4852					
			N 26° 52′ 30″ E							
	PRC	22+74.71		17,110,742.0746	661,851.4852					
MH-2	PI	24+43.61		17,110,892.7369	661,927.8366	3° 30′ 00″	1,637.0220′	336.6175′	168.9043′	11° 46′ 54″ LT
	PT	26+11.33		17,111,055.8148	661,971.8170					
			N 15° 05′ 35″ E							

RAMP "P" BASELINE

DESCRIPTION		STATION	BEARING	NORTHING	EASTING	DEGREE	RADIUS	CURVE LENGTH	TANGENT	DEFLECTION
	POT	41+00.87		17,122,243.8310	664,524.8150					
			N 15° 24′ 11″ E							
	PC	46+08.75		17,122,733.4681	664,659.7122					
PH-1	PI	47+07.71		17,122,828.8752	664,685.9973	2° 00′ 00″	2,864.7890′	197.8446′	98.9617′	3° 57′ 25″ LT
	PT	48+06.59		17,122,925.8686	664,705.6360					
			N 11° 26′ 46″ E							

STATE OF TEXAS
DERRON S. VINCIK
84028
REGISTERED PROFESSIONAL ENGINEER

The seal appearing on this document was authorized by Derron S. Vincik P.E. 84028, on April 2, 1999.

Derron S. Vincik

DATE	BY	REV	REVISION

© 1999 Texas Department of Transportation

Brown & Root
HOUSTON, TEXAS

LOOP 20

GEOMETRIC DATA SUMMARY

SHEET 6 OF 7

FED RD DIV NO	STATE PROJECT NO		SHEET NO
6	C86-14-23		756
STATE	STATE DIST NO		COUNTY
TEXAS	22		WEBB
CONT	SECT	JOB	HIGHWAY NO
0086	14	023	LOOP 20

REF FILE(S): J01LOX01.BDR; BDR LV ON = 16:45:46:57:60-62

03-13-99 BAR_HO_ES05 \HCIVIL\CF0039\PHASE2 D01GDX06.DGN-05

RAMP "F" BASE LINE

DESCRIPTION		STATION	BEARING	NORTHING	EASTING	DEGREE	RADIUS	CURVE LENGTH	TANGENT	DEFLECTION
	POT	10+00.00		17,112,089.2850	662,590.2510					
			N 9° 01′ 44″ E							
	PC	17+52.72		17,112,832.6808	662,708.3781					
FH-1	PI	18+61.20		17,112,939.8155	662,725.4020	2° 00′ 00″	2,864.7890′	216.8542′	108.4789′	4° 20′ 13″ RT
	PT	19+69.58		17,113,045.3560	662,750.4791					
			N 13° 21′ 58″ E							
	POT	30+44.62		17,114,091.2810	662,998.9980					

TEMPORARY RAMP "H" BASELINE

DESCRIPTION		STATION	BEARING	NORTHING	EASTING	DEGREE	RADIUS	CURVE LENGTH	TANGENT	DEFLECTION
	PC	99+39.17		17,112,049.0093	668,047.0835					
HH1	PI	102+25.70		17,112,159.3211	668,311.5328	3° 31′ 33″	1,625.0220′	567.2387′	286.5347′	20° 00′ 00″ LT
	PT	105+06.41		17,112,353.4272	668,522.3052					
			N 47° 21′ 26″ E							
	PC	107+22.50		17,112,499.8117	668,681.2585					
HH2	PI	110+61.27		17,112,729.3021	668,930.4533	2° 58′ 53″	1,921.8590′	670.6470′	338.7682′	19° 59′ 38″ RT
	PT	113+93.15		17,112,859.7568	669,243.0960					
			N 67° 21′ 03″ E							

RAMP "M" BASELINE

DESCRIPTION		STATION	BEARING	NORTHING	EASTING	DEGREE	RADIUS	CURVE LENGTH	TANGENT	DEFLECTION
	PC	19+74.68		17,110,457.6989	661,759.7772					
MH-1	PI	21+25.94		17,110,607.1501	661,783.1084	6° 00′ 00″	954.9237′	300.0300′	151.2614′	18° 00′ 07″ RT
	PRC	22+74.71		17,110,742.0746	661,851.4852					
			N 26° 52′ 30″ E							
	PRC	22+74.71		17,110,742.0746	661,851.4852					
MH-2	PI	24+43.61		17,110,892.7369	661,927.8366	3° 30′ 00″	1,637.0220′	336.6175′	168.9043′	11° 46′ 54″ LT
	PT	26+11.33		17,111,055.8148	661,971.8170					
			N 15° 05′ 35″ E							

RAMP "P" BASELINE

DESCRIPTION		STATION	BEARING	NORTHING	EASTING	DEGREE	RADIUS	CURVE LENGTH	TANGENT	DEFLECTION
	POT	41+00.87		17,122,243.8310	664,524.8150					
			N 15° 24′ 11″ E							
	PC	46+08.75		17,122,733.4681	664,659.7122					
PH-1	PI	47+07.71		17,122,828.8752	664,685.9973	2° 00′ 00″	2,864.7890′	197.8446′	98.9617′	3° 57′ 25″ LT
	PT	48+06.59		17,122,925.8686	664,705.6360					
			N 11° 26′ 46″ E							

RAMP "K" BASELINE

DESCRIPTION		STATION	BEARING	NORTHING	EASTING	DEGREE	RADIUS	CURVE LENGTH	TANGENT	DEFLECTION
	PC	10+00.00		17,110,456.8561	661,765.2109					
KH-1	PI	10+29.74		17,110,485.9325	661,771.4746	54° 03′ 09″	106.0000′	57.9955′	29.7435′	31° 20′ 53″ RT
	PCC	10+58.00		17,110,507.5059	661,791.9505					
			N 43° 30′ 18″ E							
	PCC	10+58.00		17,110,507.5059	661,791.9505					
KH-2	PI	12+23.26		17,110,627.3773	661,905.7236	102° 18′ 51″	55.9998′	139.3382′	165.2679′	142° 33′ 46″ RT
	PT	11+97.33		17,110,463.0353	661,888.2541					
			S 6° 04′ 04″ W							

STATE OF TEXAS
A. A. ABUGATTAS
34940
REGISTERED PROFESSIONAL ENGINEER

The seal appearing on this document was authorized by A. A. Abugattas P.E. 34940, on February 18, 2005.

DATE	BY	REV	REVISION
02/18/05	RS	1	ADD RAMP "K" BASELINE

© 1999 Texas Department of Transportation

Brown & Root
HOUSTON, TEXAS

LOOP 20

GEOMETRIC DATA SUMMARY

SHEET 6 OF 7

FED RD DIV NO	STATE PROJECT NO		SHEET NO
6	C86-14-23		256
STATE	STATE DIST NO	COUNTY	
TEXAS	22	WEBB	
CONT	SECT	JOB	HIGHWAY NO
0086	14	023	LOOP 20

REF FILE(S): J01LOX01.BDR, BDR LV ON = 16,45,46,57,60-62

D01GDX06.DGN-06 04-02-99 BAR_HO_ES05 \HCIVIL\CF0039\PHASE2

McPHERSON ROAD

DESCRIPTION		STATION	BEARING	NORTHING	EASTING	DEGREE	RADIUS	CURVE LENGTH	TANGENT	DEFLECTION
	PC	1+79.29		17,111,347.7514	668,097.9091					
MCPH1	PI	4+30.02		17,111,596.7112	668,068.1522	3° 10′ 59″	1,800.0000′	498.2577′	250.7319′	15° 51′ 36″ LT
	PT	6+77.55		17,111,828.0615	667,971.4902					
			N 22° 40′ 34″ W							
	PC	14+59.42		17,112,549.4927	667,670.0644					
MCPH2	PI	16+40.28		17,112,716.3706	667,600.3401	2° 32′ 47″	2,250.0000′	360.9406′	180.8583′	9° 11′ 29″ RT
	PT	18+20.36		17,112,892.2431	667,558.1665					
			N 13° 29′ 05″ W							

GRAND CENTRAL ROAD

DESCRIPTION		STATION	BEARING	NORTHING	EASTING	DEGREE	RADIUS	CURVE LENGTH	TANGENT	DEFLECTION
	POT	10+00.00		17,111,167.6450	663,858.9420					
			N 11° 56′ 50″ E							
	PC	12+42.36		17,111,404.7511	663,909.1128					
GCH1	PI	13+46.11		17,111,506.2624	663,930.5922	5° 30′ 00″	1,041.7410′	206.8356′	103.7589′	11° 22′ 33″ LT
	PT	14+49.19		17,111,610.0161	663,931.6269					
			N 0° 34′ 17″ E							
	POT	18+26.54		17,111,987.3460	663,935.3900					

UNIROYAL ROAD

DESCRIPTION		STATION	BEARING	NORTHING	EASTING	DEGREE	RADIUS	CURVE LENGTH	TANGENT	DEFLECTION
	POT	10+00.00		17,139,808.3010	672,425.1210					
			S 52° 00′ 27″ E							
	PC	13+91.96		17,139,567.0262	672,734.0212					
UNRLH-1	PI	14+37.72		17,139,538.8572	672,770.0855	28° 38′ 52″	200.0000′	89.9745′	45.7617′	25° 46′ 33″ LT
	PRC	14+81.93		17,139,529.1735	672,814.8109					
			S 77° 47′ 00″ E							
	PRC	14+81.93		17,139,529.1735	672,814.8109					
UNRLH-2	PI	15+23.70		17,139,520.3352	672,855.6299	28° 38′ 52″	200.0000′	82.3465′	41.7649′	23° 35′ 26″ RT
	PT	15+64.28		17,139,495.8999	672,889.5006					
			S 54° 11′ 32″ E							

WEST FRONTAGE ROAD

DESCRIPTION	STATION	BEARING	NORTHING	EASTING	DEGREE	RADIUS	CURVE LENGTH	TANGENT	DEFLECTION
POT	17+74.40		17,139,622.8030	672,296.1210					
		N 37° 59′ 33″ E							
POT	22+26.66		17,139,979.2240	672,574.5130					

EAST FRONTAGE ROAD

DESCRIPTION	STATION	BEARING	NORTHING	EASTING	DEGREE	RADIUS	CURVE LENGTH	TANGENT	DEFLECTION
POT	17+74.40		17,139,341.8940	672,655.7640					
		N 37° 59′ 34″ E							
POT	23+05.00		17,139,760.0540	672,982.3800					

KILLAM INDUSTRIAL BLVD

DESCRIPTION	STATION	BEARING	NORTHING	EASTING	DEGREE	RADIUS	CURVE LENGTH	TANGENT	DEFLECTION
POT	50+00.00		17,119,210.5930	663,884.1340					
		N 78° 32′ 44″ W							
POT	51+48.73		17,119,240.1290	663,738.3670					

STATE OF TEXAS
DERRON S. VINCIK
84028
REGISTERED PROFESSIONAL ENGINEER

The seal appearing on this document was authorized by Derron S. Vincik P.E. 84028, on April 2, 1999.

DATE	BY	REV	REVISION

© 1999 Texas Department of Transportation

Brown & Root
HOUSTON, TEXAS

LOOP 20

GEOMETRIC DATA SUMMARY

SHEET 7 OF 7

FED RD DIV NO	STATE PROJECT NO		SHEET NO
6	C86-14-23		257
STATE	STATE DIST NO		COUNTY
TEXAS	22		WEBB
CONT	SECT	JOB	HIGHWAY NO
0086	14	023	LOOP 20

REF FILE(S): J01LOX01.BDR, BDR LV ON = 16,45,46,57,60-62

D01GDX07.DGN-04 03-13-99 BAR_HO_ES05 \HCIVIL\CF0039\PHASE2

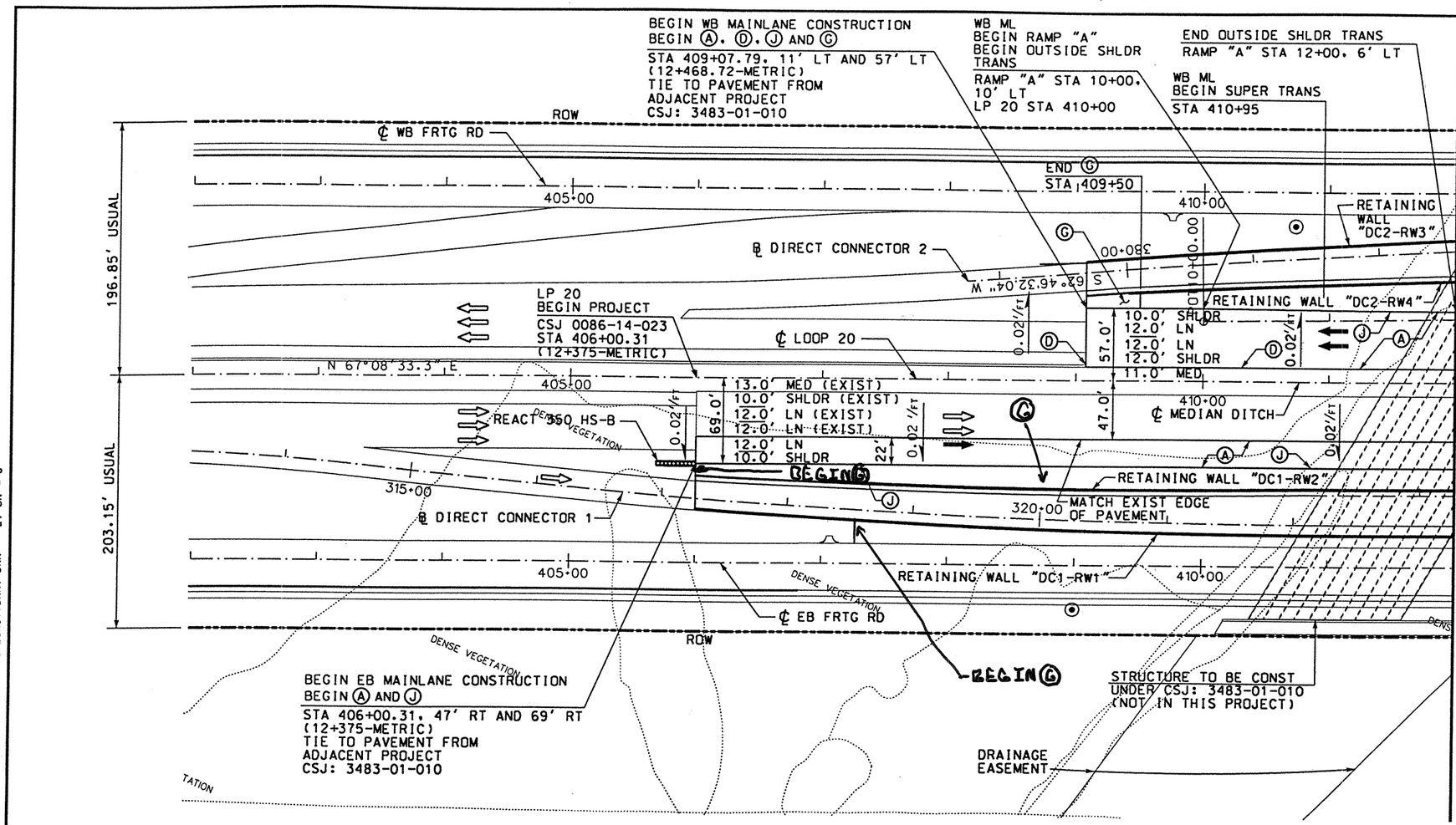

LEGEND:

- Ⓐ CONC PAV (CONT REINF HY STL)(12")
- Ⓑ ASPH CONC PAV (TY A)(4")
- Ⓒ LIME TREATED SUBGRADE (8")
- Ⓓ SINGLE SLOPE CONCRETE BARRIER (SSCB) (TYPE 2)
- Ⓔ TYPE II MONO CURB (6")
- Ⓕ CELL FIBER MULCH SEED (PERM) (RURAL)(CLAY)
- Ⓖ CLASS B RIPRAP (4")
- Ⓗ CONC SIDEWALK (4")
- Ⓘ CONC MEDIAN (6")
- Ⓙ SINGLE SLOPE TRAFFIC RAIL(SSTR) w/ DRAIN SLOTS
- Ⓚ RETAINING WALL
- Ⓛ METAL BEAM GUARD FENCE
- Ⓜ BRICK PAVERS
- Ⓝ REMOVE ASPH CONC PAV
- Ⓞ REMOVE CONC PAV
- Ⓟ TYPE II CURB AND GUTTER (6")
- Ⓠ CONCRETE DRIVEWAYS (6")
- Ⓡ ASPH CONC PAV (TY D)(2")
- Ⓢ ASPH CONC PAV (TY A)(8")
- Ⓣ PLANE ASPH CONC PAV (0 - 1")
- Ⓗ SINGLE SLOPE TRAFFIC RAIL (SSTR)
- Ⓥ CHAINLINK FENCE (6')
- Ⓦ ROADWAY UNDERDRAIN
- Ⓧ WHEELCHAIR RAMP TYPE B

NOTES:

1. SEE "GEOMETRIC DATA SUMMARY" FOR ALIGNMENT DATA.
2. SEE DIRECT CONNECTOR 1 "PLAN & PROFILE" FOR DETAILS.
3. SEE DIRECT CONNECTOR 2 "PLAN & PROFILE" FOR DETAILS.
4. SEE "REMOVAL LAYOUT" FOR MORE DETAILS.

STATE OF TEXAS
DERRON S. VINCIK
84028
REGISTERED PROFESSIONAL ENGINEER

The seal appearing on this document was authorized by Derron S. Vincik P.E. 84028, on April 2, 1999.

Derron S. Vincik

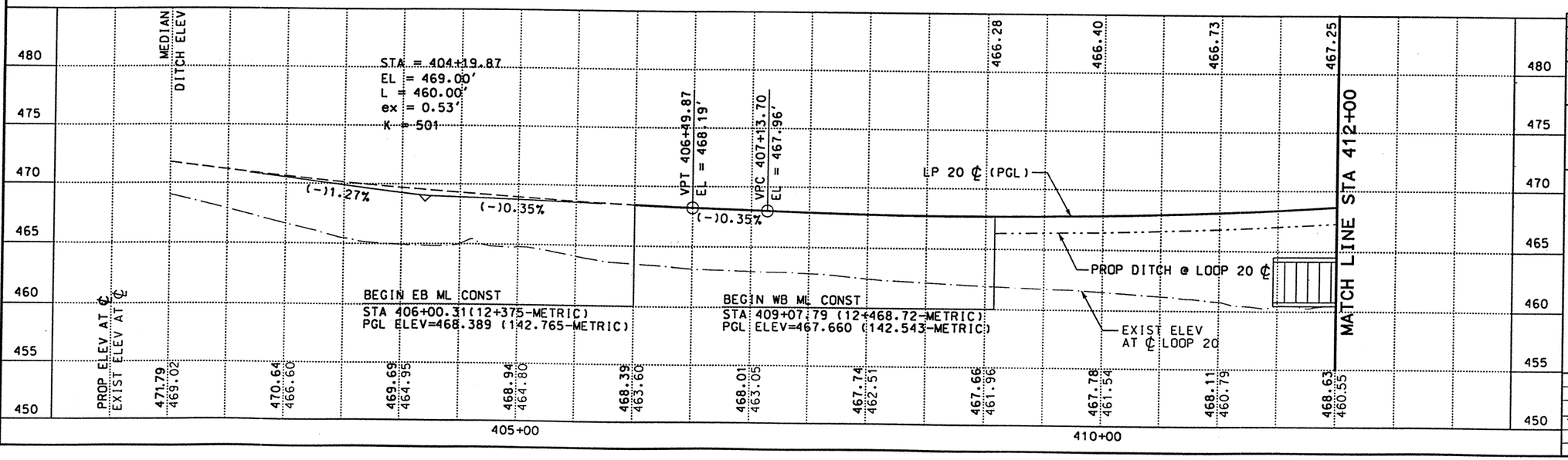

DATE	BY	REV	REVISION

© 1999

Texas Department of Transportation

Brown & Root
HOUSTON, TEXAS

LOOP 20
MAINLANES

PLAN AND PROFILE
STA 402+00 TO STA 412+00

0 50 100
SCALE: 1"=100' HORIZ
1"=10' VERT

SHEET 1 OF 2

FED RD DIV NO	STATE PROJECT NO	SHEET NO
6	C86-14-23	159

STATE	STATE DIST NO	COUNTY
TEXAS	22	WEBB

CONT	SECT	JOB	HIGHWAY NO
0086	14	023	LOOP 20

REF FILE(S): J01LOX01.PRO, PRO LV ON = J01LOX01.UTI, UTI LV ON = 1-63 J01LOX01.ILL, ILL LV ON = 20 J01LOX01.FND, FND LV ON = 35 J01LOX01.DRN, DRN LV ON = 8

REF FILE(S): J01LOX01.BCK, BCK LV ON = J01LOX01.EOP, EOP LV ON = 1-30 J01LOX01.EOP, ALG LV ON = 1-11,13-17,19-27,29-41,43-53,5 J01LOX01.BDR, BDR LV ON = 1-44 5,10,35,45,46,57,60-62

D03LMX01.DGN-11 04-05-99 BAR_HO_ES05 \HCIVIL\CF0039\PHASE2

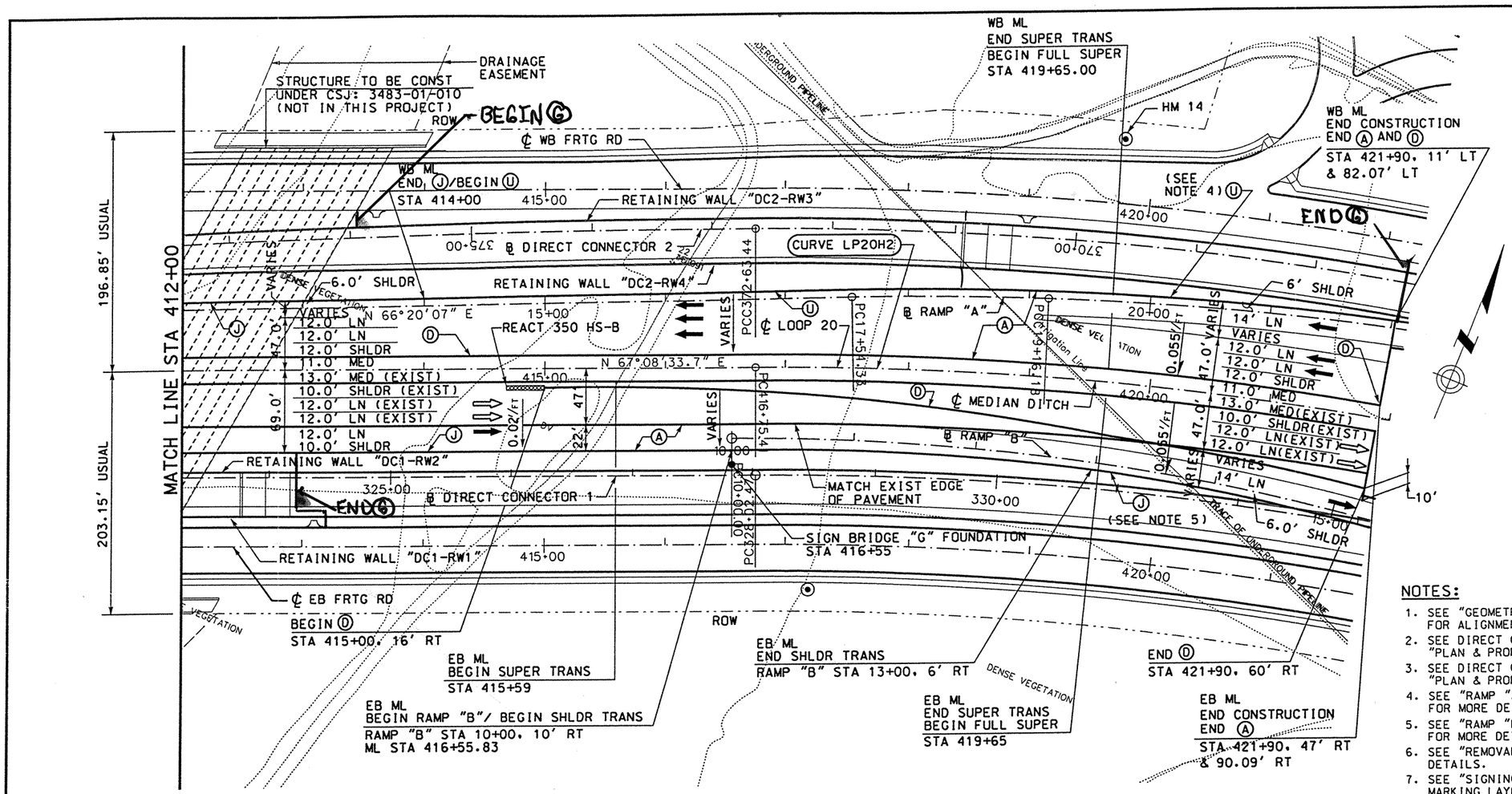

LEGEND:

- Ⓐ CONC PAV (CONT REINF HY STL)(12")
- Ⓑ ASPH CONC PAV (TY A)(4")
- Ⓒ LIME TREATED SUBGRADE (8")
- Ⓓ SINGLE SLOPE CONCRETE BARRIER (SSCB) (TYPE 2)
- Ⓔ TYPE II MONO CURB (6")
- Ⓕ CELL FIBER MULCH SEED (PERM) (RURAL)(CLAY)
- Ⓖ CLASS B RIPRAP (4")
- Ⓗ CONC SIDEWALK (4")
- Ⓘ CONC MEDIAN (6")
- Ⓙ SINGLE SLOPE TRAFFIC RAIL(SSTR) w/ DRAIN SLOTS
- Ⓚ RETAINING WALL
- Ⓛ METAL BEAM GUARD FENCE
- Ⓜ BRICK PAVERS
- Ⓝ REMOVE ASPH CONC PAV
- Ⓞ REMOVE CONC PAV
- Ⓟ TYPE II CURB AND GUTTER (6")
- Ⓠ CONCRETE DRIVEWAYS (6")
- Ⓡ ASPH CONC PAV (TY D)(2")
- Ⓢ ASPH CONC PAV (TY A)(8")
- Ⓣ PLANE ASPH CONC PAV (0 - 1")
- Ⓤ SINGLE SLOPE TRAFFIC RAIL (SSTR)
- Ⓥ CHAINLINK FENCE (6')
- Ⓦ ROADWAY UNDERDRAIN
- Ⓧ WHEELCHAIR RAMP TYPE B

NOTES:

1. SEE "GEOMETRIC DATA SUMMARY" FOR ALIGNMENT DATA.
2. SEE DIRECT CONNECTOR 1 "PLAN & PROFILE" FOR DETAILS.
3. SEE DIRECT CONNECTOR 2 "PLAN & PROFILE" FOR DETAILS.
4. SEE "RAMP "A" PLAN & PROFILE" FOR MORE DETAILS.
5. SEE "RAMP "B" PLAN & PROFILE" FOR MORE DETAILS.
6. SEE "REMOVAL LAYOUT" FOR MORE DETAILS.
7. SEE "SIGNING AND PAVEMENT MARKING LAYOUTS" FOR STRIPING DETAILS.

STATE OF TEXAS
DERRON S. VINCIK
84028
REGISTERED PROFESSIONAL ENGINEER

The seal appearing on this document was authorized by Derron S. Vincik P.E. 84028, on June 16, 1999.

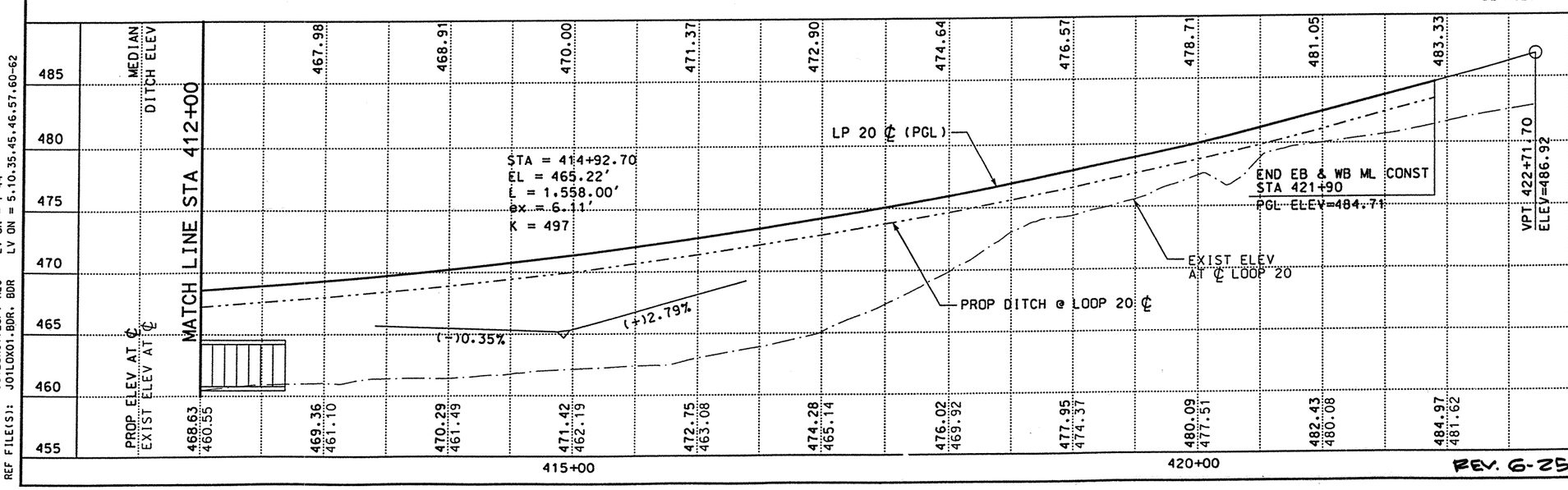

DATE	BY	REV	REVISION
6/3/99	DV	01	CALLOUTS
6/16/99	DV	02	ADD. SSCB

© 1999

Texas Department of Transportation

Brown & Root
HOUSTON, TEXAS

LOOP 20
MAINLANES

PLAN AND PROFILE
STA 412+00 TO STA 422+00

0 50 100
SCALE: 1"=100' HORIZ
1"=10' VERT

SHEET 2 OF 2

FED RD DIV NO	STATE PROJECT NO	SHEET NO
6	C86-14-23	259

STATE	STATE DIST NO	COUNTY
TEXAS	22	WEBB

CONT	SECT	JOB	HIGHWAY NO
0086	14	023	LOOP 20

REF FILE(S): J01LOX01.PRO, J01LOX01.UTI, J01LOX01.ILL, J01LOX01.FND, J01LOX01.DRN
LV ON = 1-63, LV ON = 1-63, LV ON = 20, LV ON = 35, LV ON = 8

REF FILE(S): J01LOX01.BCK, J01LOX01.EDP, J01LOX01.EDP, J01LOX01.BDR
LV ON = 1-30, LV ON = 1-11,13-17,19-27,29-41,43-53,5, LV ON = 1-44, LV ON = 5,10,35,45,46,57,60-62

D03LMX02.DGN-13 06-16-99 BAR_HO_ES05 \HCIVIL\CF0039\PHASE2

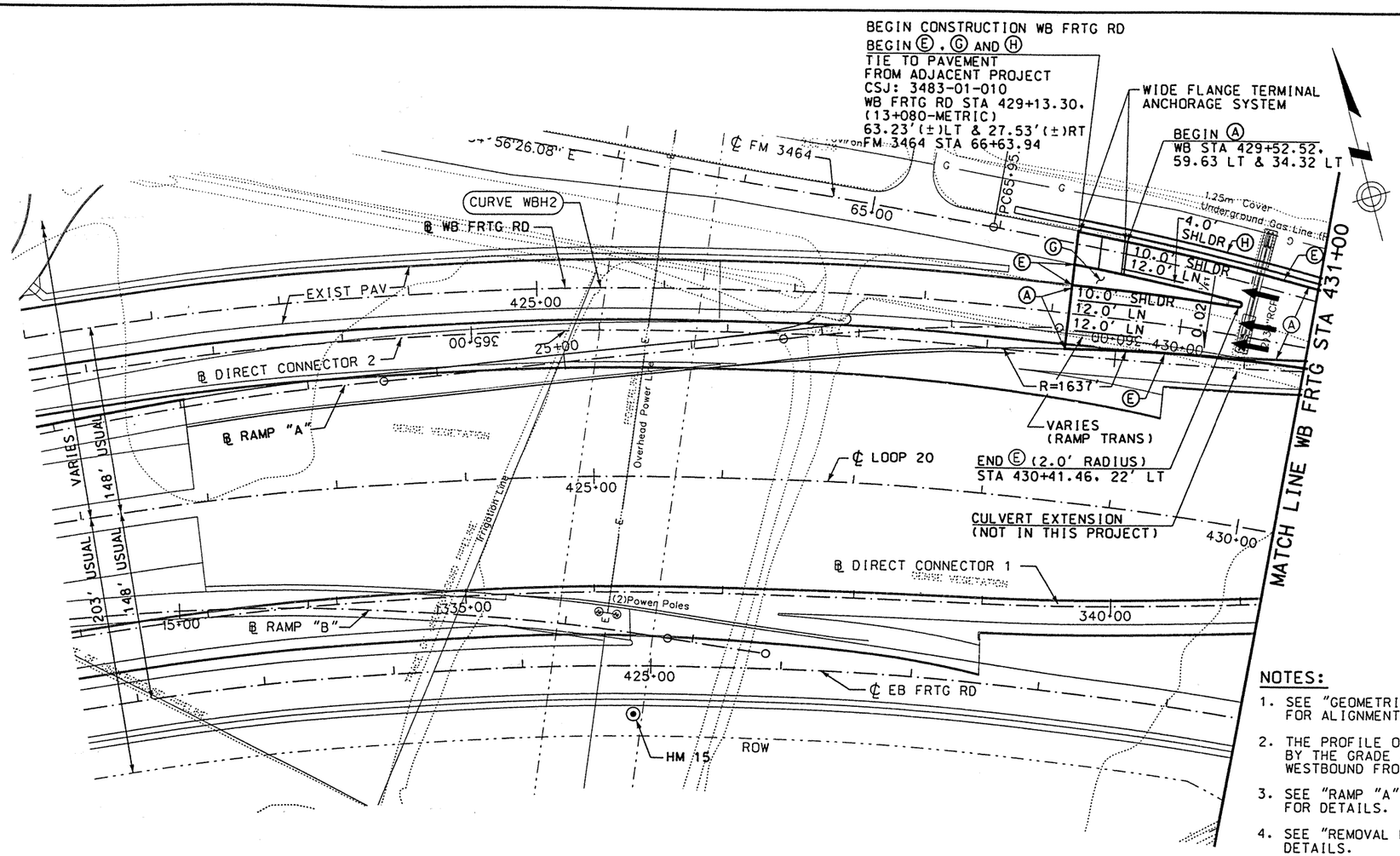

LEGEND:

- Ⓐ CONC PAV (CONT REINF HY STL)(12")
- Ⓑ ASPH CONC PAV (TY A)(4")
- Ⓒ LIME TREATED SUBGRADE (8")
- Ⓓ SINGLE SLOPE CONCRETE BARRIER (SSCB) (TYPE 2)
- Ⓔ TYPE II MONO CURB (6")
- Ⓕ CELL FIBER MULCH SEED (PERM) (RURAL)(CLAY)
- Ⓖ CLASS B RIPRAP (4")
- Ⓗ CONC SIDEWALK (4")
- Ⓘ CONC MEDIAN (6")
- Ⓙ SINGLE SLOPE TRAFFIC RAIL(SSTR) w/ DRAIN SLOTS
- Ⓚ RETAINING WALL
- Ⓛ METAL BEAM GUARD FENCE
- Ⓜ BRICK PAVERS
- Ⓝ REMOVE ASPH CONC PAV
- Ⓞ REMOVE CONC PAV
- Ⓟ TYPE II CURB AND GUTTER (6")
- Ⓠ CONCRETE DRIVEWAYS (6")
- Ⓡ ASPH CONC PAV (TY D)(2")
- Ⓢ ASPH CONC PAV (TY A)(8")
- Ⓣ PLANE ASPH CONC PAV (0 - 1")
- Ⓤ SINGLE SLOPE TRAFFIC RAIL (SSTR)
- Ⓥ CHAINLINK FENCE (6')
- Ⓦ ROADWAY UNDERDRAIN
- Ⓧ WHEELCHAIR RAMP TYPE B

NOTES:

1. SEE "GEOMETRIC DATA SUMMARY" FOR ALIGNMENT DATA.
2. THE PROFILE OF FM 3464 IS DETERMINED BY THE GRADE AND CROSS SLOPE OF THE WESTBOUND FRONTAGE ROAD.
3. SEE "RAMP "A" PLAN & PROFILE" FOR DETAILS.
4. SEE "REMOVAL LAYOUT" FOR MORE DETAILS.

STATE OF TEXAS
DERRON S. VINCIK
84028
REGISTERED PROFESSIONAL ENGINEER

The seal appearing on this document was authorized by Derron S. Vincik P.E. 84028, on June 3, 1999.

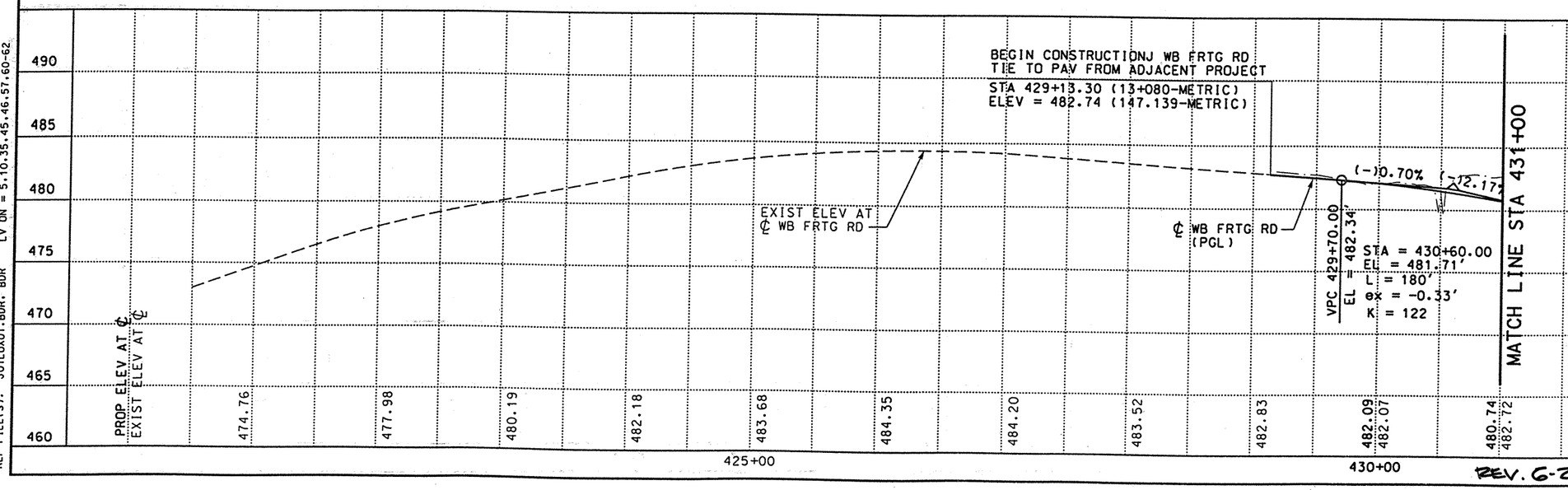

REV. 6-25-99

DATE	BY	REV	REVISION
6/3/99	DV	01	WIDE FLANGE TERMINAL ANCHORAGE SYSTEM

© 1999 Texas Department of Transportation

Brown & Root
HOUSTON, TEXAS

LOOP 20
WESTBOUND FRONTAGE ROAD

PLAN AND PROFILE
STA 421+00 TO STA 431+00

0 50 100
SCALE: 1"=100' HORIZ
1"=10' VERT

SHEET 1 OF 10

FED RD DIV NO	STATE PROJECT NO		SHEET NO
6	C86-14-23		260
STATE	STATE DIST NO	COUNTY	
TEXAS	22	WEBB	
CONT	SECT	JOB	HIGHWAY NO
0086	14	023	LOOP 20

REF FILE(S): J01LOX01.PRO, PRD LV ON = 1-63
J01LOX01.UTI, UTI LV ON = 1-63
J01LOX01.ILL, ILL LV ON = 20
J01LOX01.FND, FND LV ON = 35
J01LOX01.DRN, DRN LV ON = 8

REF FILE(S): J01LOX01.BCK, BCK LV ON = 1-30
J01LOX01.EOP, EOP LV ON = 1-11,13-17,19-27,29-41,43-53,5
J01LOX01.EOP, ALG LV ON = 1-44
J01LOX01.BDR, BDR LV ON = 5,10,35,45,46,57,60-62

D03FWX03.DGN-11 06-02-99 BAR_HO_ES05 \HCIVIL\CF0039\PHASE2

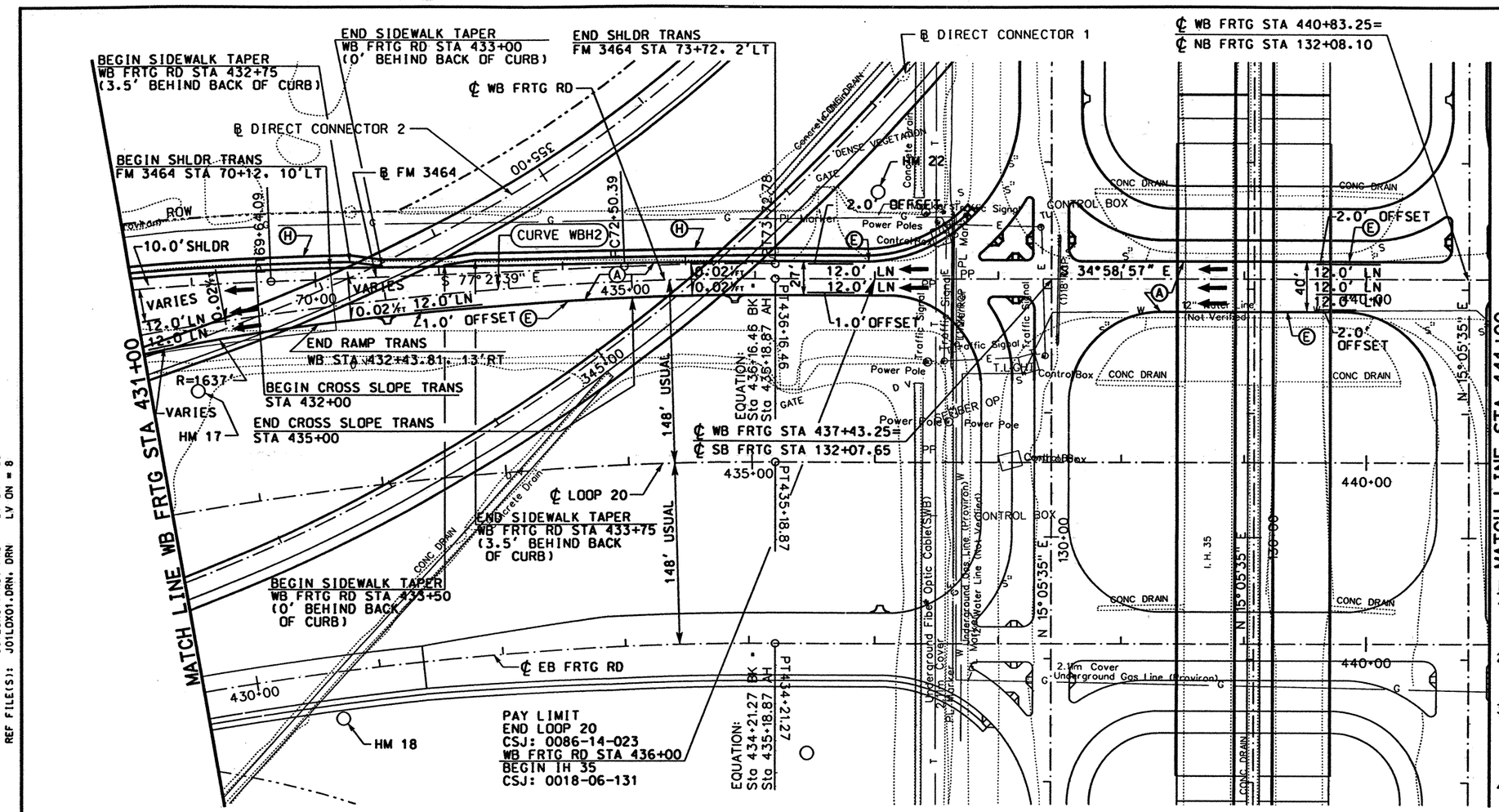

LEGEND:

- Ⓐ CONC PAV (CONT REINF HY STL)(12")
- Ⓑ ASPH CONC PAV (TY A)(4")
- Ⓒ LIME TREATED SUBGRADE (8")
- Ⓓ SINGLE SLOPE CONCRETE BARRIER (SSCB) (TYPE 2)
- Ⓔ TYPE II MONO CURB (6")
- Ⓕ CELL FIBER MULCH SEED (PERM) (RURAL)(CLAY)
- Ⓖ CLASS B RIPRAP (4")
- Ⓗ CONC SIDEWALK (4")
- Ⓘ CONC MEDIAN (6")
- Ⓙ SINGLE SLOPE TRAFFIC RAIL(SSTR) w/ DRAIN SLOTS
- Ⓚ RETAINING WALL
- Ⓛ METAL BEAM GUARD FENCE
- Ⓜ BRICK PAVERS
- Ⓝ REMOVE ASPH CONC PAV
- Ⓞ REMOVE CONC PAV
- Ⓟ TYPE II CURB AND GUTTER (6")
- Ⓠ CONCRETE DRIVEWAYS (6")
- Ⓡ ASPH CONC PAV (TY D)(2")
- Ⓢ ASPH CONC PAV (TY A)(8")
- Ⓣ PLANE ASPH CONC PAV (0 - 1")
- Ⓤ SINGLE SLOPE TRAFFIC RAIL (SSTR)
- Ⓥ CHAINLINK FENCE (6')
- Ⓦ ROADWAY UNDERDRAIN
- Ⓧ WHEELCHAIR RAMP TYPE B

NOTES:

1. SEE "GEOMETRIC DATA SUMMARY" FOR ALIGNMENT DATA.
2. SEE "LOOP 20 AND IH-35 INTERSECTION LAYOUT" FOR MORE DETAILS.
3. SEE "LOOP 20/IH35 CONTOUR GRADING PLAN" FOR CROSS SLOPES AND ELEVATIONS WITHIN THE INTERSECTION.
4. SEE "REMOVAL LAYOUT" FOR MORE DETAILS.

STATE OF TEXAS
DERRON S. VINCIK
84028
REGISTERED PROFESSIONAL ENGINEER

The seal appearing on this document was authorized by Derron S. Vincik P.E. 84028, on April 2, 1999.

Derron S. Vincik

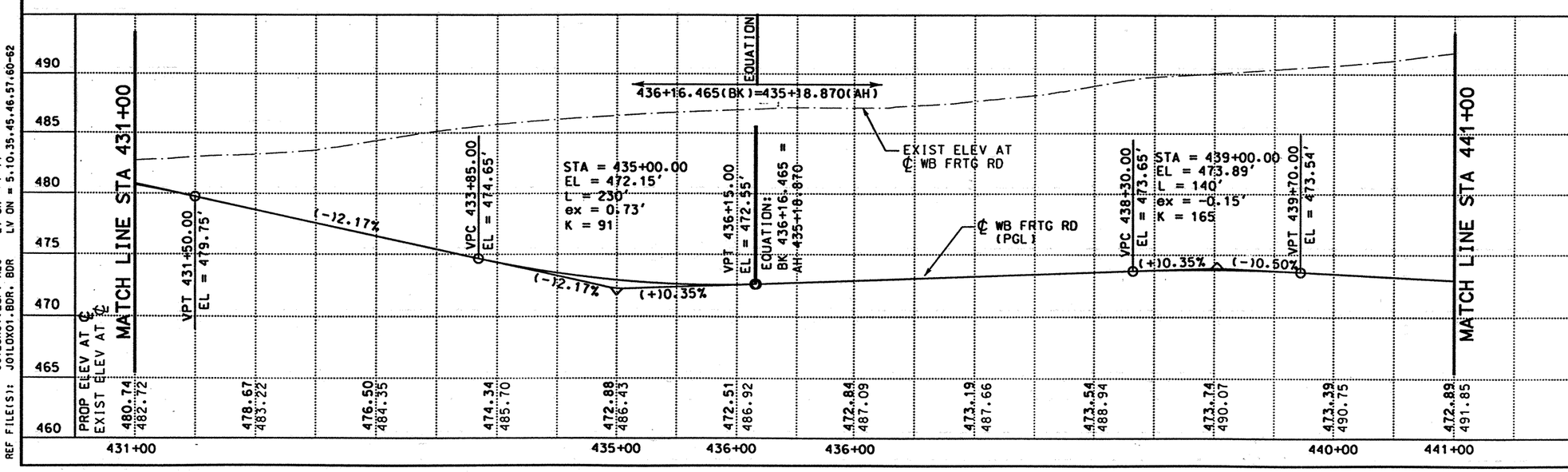

DATE	BY	REV	REVISION

© 1999 Texas Department of Transportation

Brown & Root
HOUSTON, TEXAS

LOOP 20
WESTBOUND FRONTAGE ROAD

PLAN AND PROFILE
STA 431+00 TO STA 441+00

0 50 100
SCALE: 1"=100' HORIZ
1"=10' VERT

SHEET 2 OF 10

FED RD DIV NO	STATE PROJECT NO	SHEET NO
6	C86-14-23	261

STATE	STATE DIST NO	COUNTY
TEXAS	22	WEBB

CONT	SECT	JOB	HIGHWAY NO
0086	14	023	LOOP 20

REF FILE(S): J01LOX01.PRO, PRO LV ON = 1-63
J01LOX01.UTI, UTI LV ON = 1-63
J01LOX01.ILL, ILL LV ON = 20
J01LOX01.FND, FND LV ON = 35
J01LOX01.DRN, DRN LV ON = 8

REF FILE(S): J01LOX01.BCK, BCK LV ON = 1-30
J01LOX01.EOP, EOP LV ON = 1-11,13-17,19-27,29-41,43-53,5
J01LOX01.EOP, ALG LV ON = 1-44
J01LOX01.BDR, BDR LV ON = 5,10,35,45,46,57,60-62

D03FWX04.DGN-09 04-01-99 BAR_HO_ES05 \HCIVIL\CF0039\PHASE2

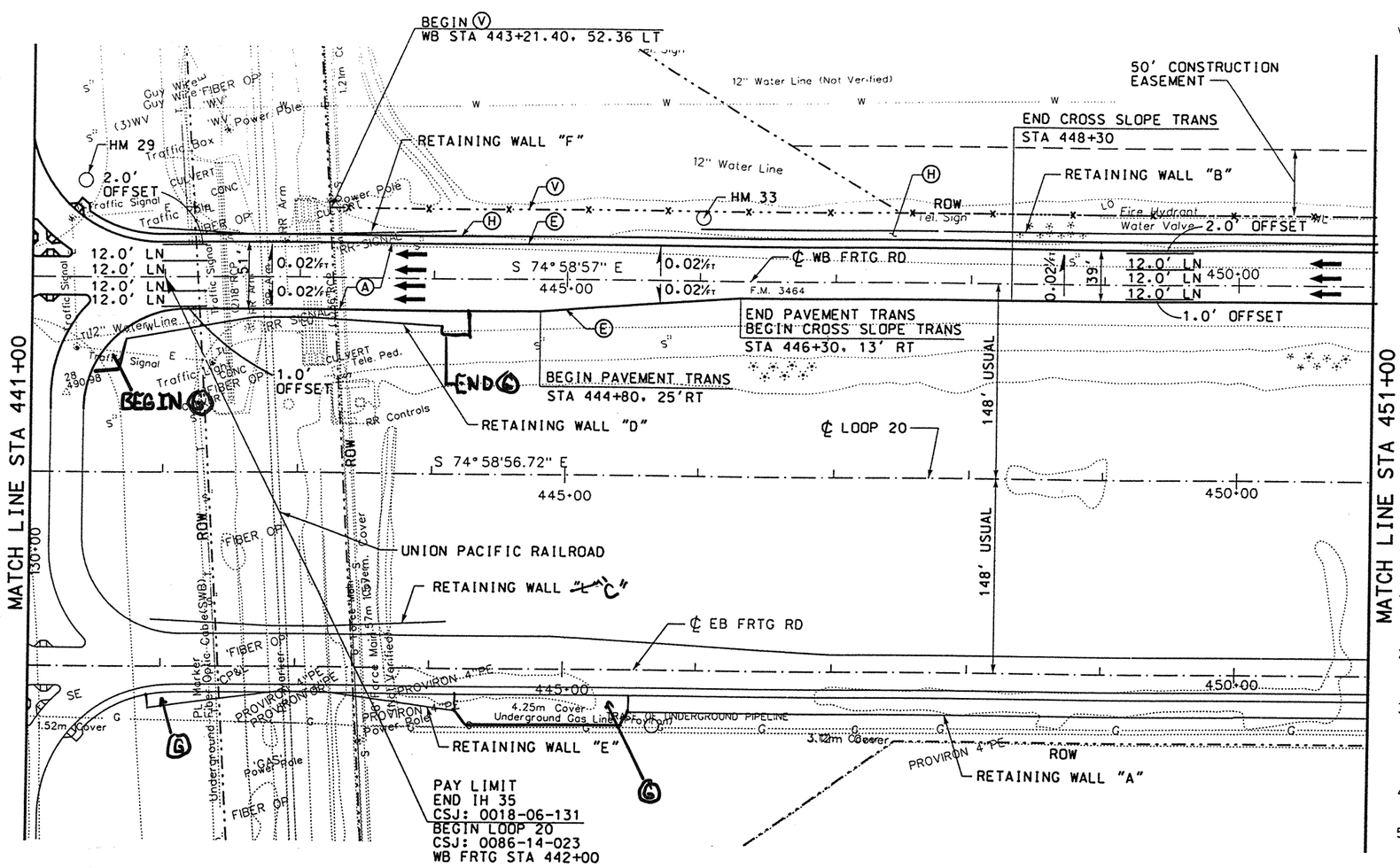

LEGEND:

- Ⓐ CONC PAV (CONT REINF HY STL)(12")
- Ⓑ ASPH CONC PAV (TY A)(4")
- Ⓒ LIME TREATED SUBGRADE (8")
- Ⓓ SINGLE SLOPE CONCRETE BARRIER (SSCB) (TYPE 2)
- Ⓔ TYPE II MONO CURB (6")
- Ⓕ CELL FIBER MULCH SEED (PERM) (RURAL)(CLAY)
- Ⓖ CLASS B RIPRAP (4")
- Ⓗ CONC SIDEWALK (4")
- Ⓘ CONC MEDIAN (6")
- Ⓙ SINGLE SLOPE TRAFFIC RAIL(SSTR) w/ DRAIN SLOTS
- Ⓚ RETAINING WALL
- Ⓛ METAL BEAM GUARD FENCE
- Ⓜ BRICK PAVERS
- Ⓝ REMOVE ASPH CONC PAV
- Ⓞ REMOVE CONC PAV
- Ⓟ TYPE II CURB AND GUTTER (6")
- Ⓠ CONCRETE DRIVEWAYS (6")
- Ⓡ ASPH CONC PAV (TY D)(2")
- Ⓢ ASPH CONC PAV (TY A)(8")
- Ⓣ PLANE ASPH CONC PAV (0 - 1")
- Ⓤ SINGLE SLOPE TRAFFIC RAIL (SSTR)
- Ⓥ CHAINLINK FENCE (6')
- Ⓦ ROADWAY UNDERDRAIN
- Ⓧ WHEELCHAIR RAMP TYPE B

NOTES:

1. SEE "GEOMETRIC DATA SUMMARY" FOR ALIGNMENT DATA.
2. SEE "LOOP 20 AND IH-35 INTERSECTION LAYOUT" FOR MORE DETAILS.
3. SEE "LOOP 20/IH 35 CONTOUR GRADING PLAN" FOR CROSS SLOPES AND ELEVATIONS WITHIN THE INTERSECTION.
4. SEE "REMOVAL LAYOUT" FOR MORE DETAILS.
5. SEE "RETAINING WALL LAYOUTS "B", "D", & "F" FOR MORE DETAILS.

STATE OF TEXAS
DERRON S. VINCIK
84028
REGISTERED PROFESSIONAL ENGINEER

The seal appearing on this document was authorized by Derron S. Vincik P.E. 84028, on June 3, 1999.

Derron S. Vincik

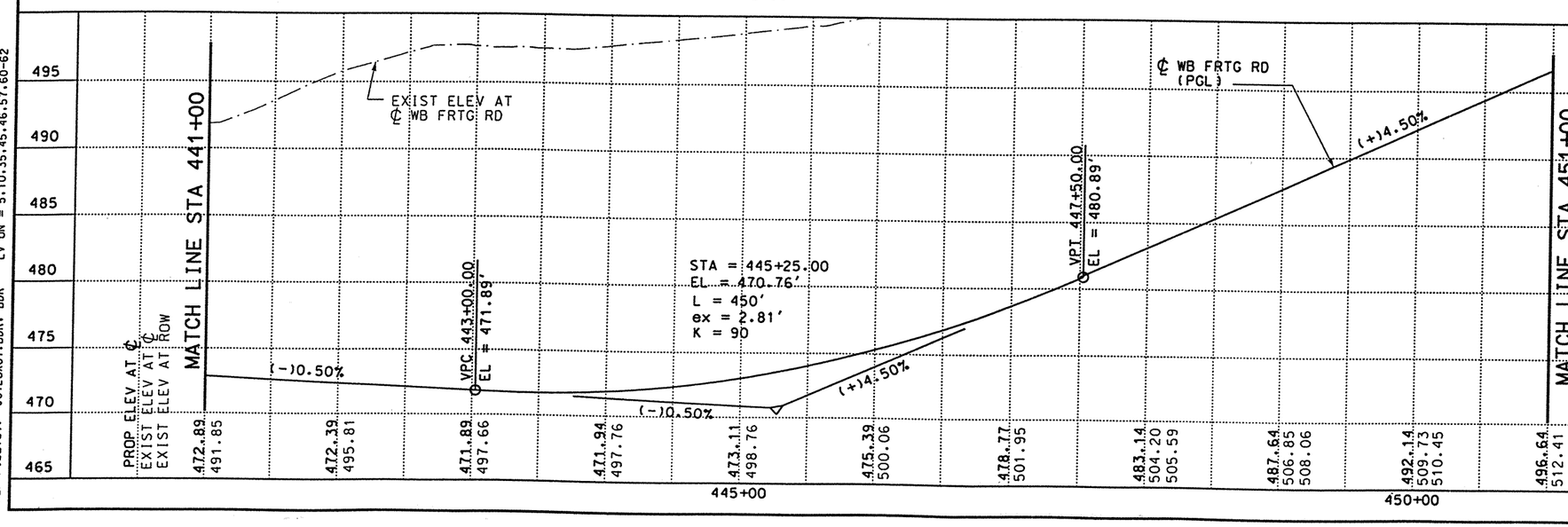

DATE	BY	REV	REVISION
6/3/99	DV	01	CONSTRUCTION EASEMENT

© 1999 Texas Department of Transportation

Brown & Root
HOUSTON, TEXAS

LOOP 20
WESTBOUND FRONTAGE ROAD

PLAN AND PROFILE
STA 441+00 TO STA 451+00

0 50 100
SCALE: 1"=100' HORIZ
1"=10' VERT

SHEET 3 OF 10

FED RD DIV NO	STATE PROJECT NO	SHEET NO
6	C86-14-23	262

STATE	STATE DIST NO	COUNTY
TEXAS	22	WEBB

CONT	SECT	JOB	HIGHWAY NO
0086	14	023	LOOP 20

REF FILE(S): J01LOX01.PRO, PRO LV ON = 1-63
J01LOX01.UTI, UTI LV ON = 1-63
J01LOX01.ILL, ILL LV ON = 20
J01LOX01.FND, FND LV ON = 35
J01LOX01.DRN, DRN LV ON = 8

REF FILE(S): J01LOX01.BCK, BCK LV ON = 1-30
J01LOX01.EOP, EOP LV ON = 1-11,13-17,19-27,29-41,43-53,5
J01LOX01.EOP, ALG LV ON = 1-44
J01LOX01.BDR, BDR LV ON = 5,10,35,45,46,57,60-62

05-29-99 BAR_HO_ES05 \HCIVIL\CF0039\PHASE2
D03FWX05.DGN-10

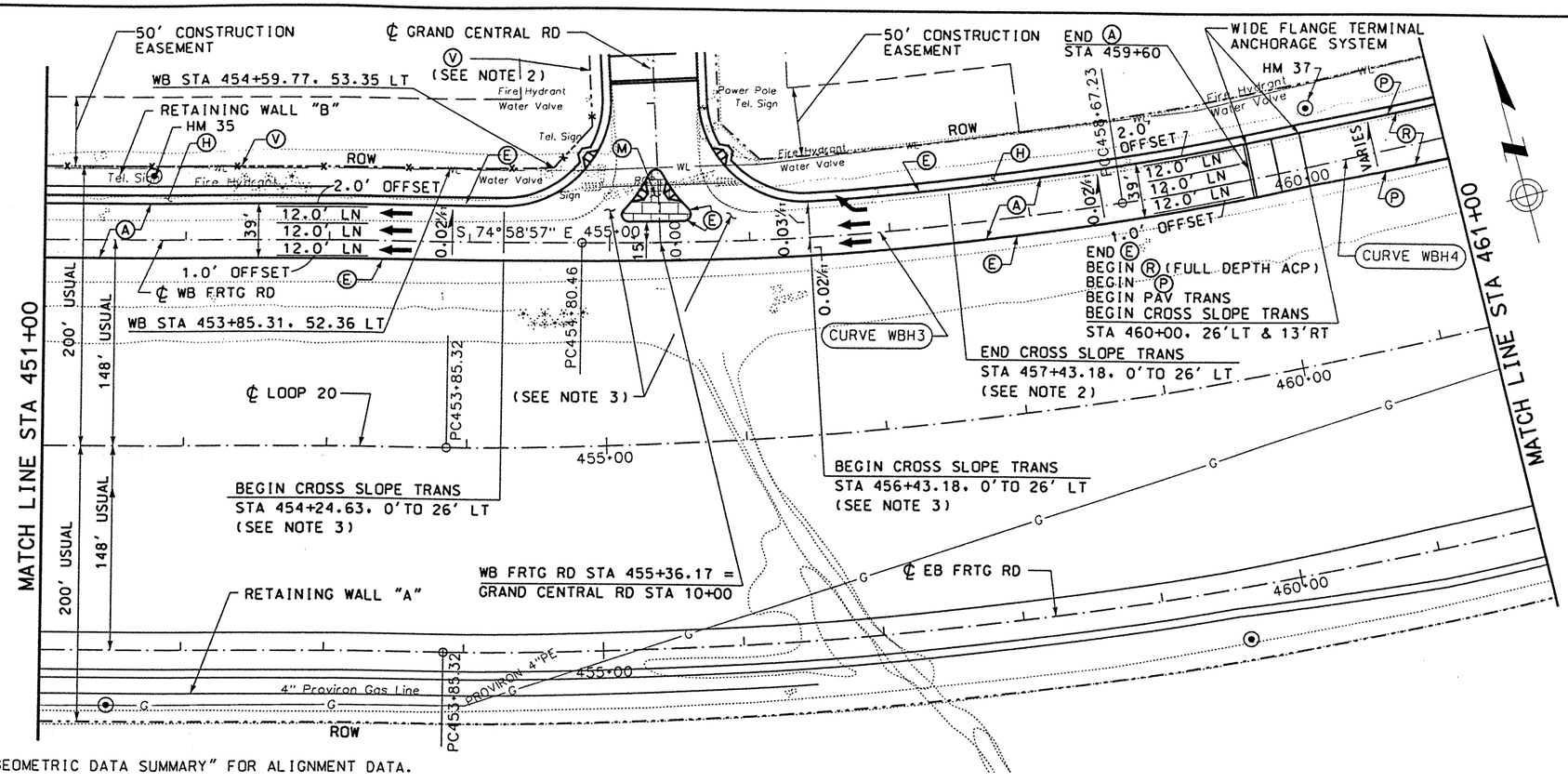

LEGEND:

- Ⓐ CONC PAV (CONT REINF HY STL)(12")
- Ⓑ ASPH CONC PAV (TY A)(4")
- Ⓒ LIME TREATED SUBGRADE (8")
- Ⓓ SINGLE SLOPE CONCRETE BARRIER (SSCB) (TYPE 2)
- Ⓔ TYPE II MONO CURB (6")
- Ⓕ CELL FIBER MULCH SEED (PERM) (RURAL)(CLAY)
- Ⓖ CLASS B RIPRAP (4")
- Ⓗ CONC SIDEWALK (4")
- Ⓘ CONC MEDIAN (6")
- Ⓙ SINGLE SLOPE TRAFFIC RAIL(SSTR) w/ DRAIN SLOTS
- Ⓚ RETAINING WALL
- Ⓛ METAL BEAM GUARD FENCE
- Ⓜ BRICK PAVERS
- Ⓝ REMOVE ASPH CONC PAV
- Ⓞ REMOVE CONC PAV
- Ⓟ TYPE II CURB AND GUTTER (6")
- Ⓠ CONCRETE DRIVEWAYS (6")
- Ⓡ ASPH CONC PAV (TY D)(2")
- Ⓢ ASPH CONC PAV (TY A)(8")
- Ⓣ PLANE ASPH CONC PAV (0 - 1")
- Ⓤ SINGLE SLOPE TRAFFIC RAIL (SSTR)
- Ⓥ CHAINLINK FENCE (6')
- Ⓦ ROADWAY UNDERDRAIN
- Ⓧ WHEELCHAIR RAMP TYPE B

NOTES:

1. SEE "GEOMETRIC DATA SUMMARY" FOR ALIGNMENT DATA.
2. SEE "GRAND CENTRAL RD PLAN AND PROFILE" FOR MORE DETAILS.
3. SEE "GRAND CENTRAL RD INTERSECTION LAYOUT" FOR MORE INFORMATION AND FOR ELEVATIONS AND CROSS SLOPES WITHIN THE INTERSECTION.
4. SEE "RETAINING WALL "B" LAYOUT" FOR MORE DETAILS.
5. SEE "REMOVAL LAYOUT" FOR MORE DETAILS.

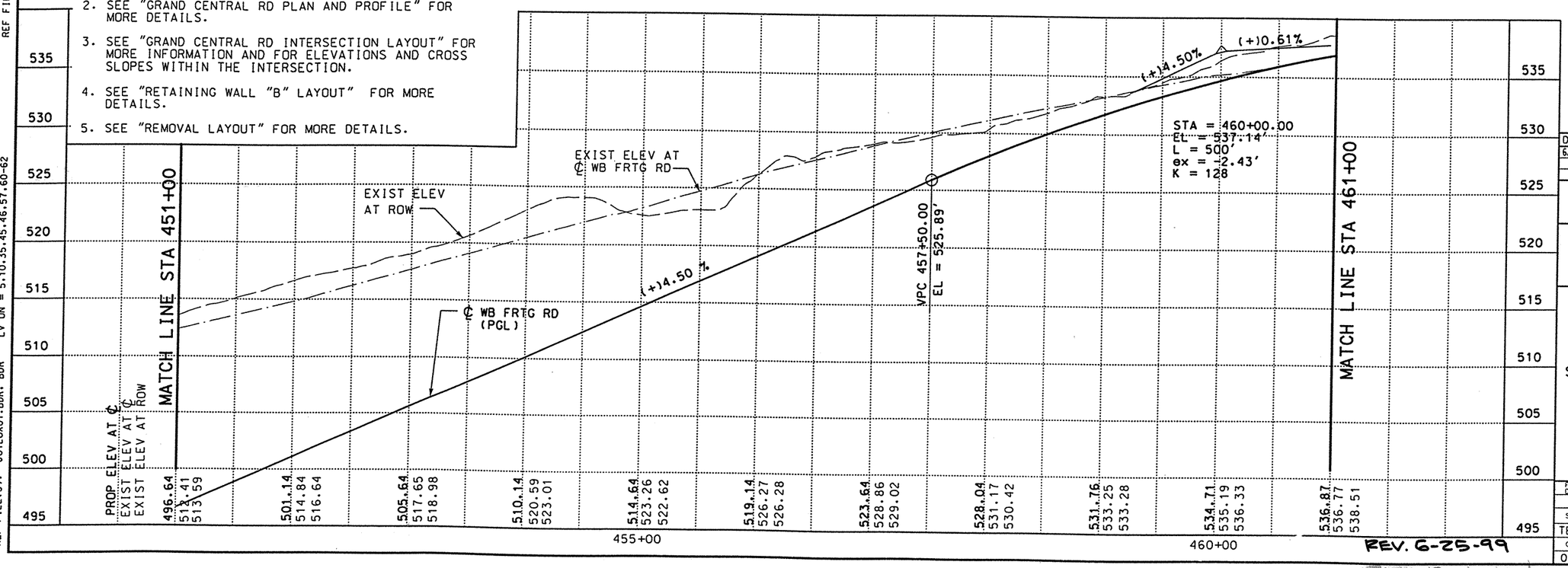

REV. 6-25-99

SEE REVISION

STATE OF TEXAS
DERRON S. VINCIK
P.E. 84028
REGISTERED PROFESSIONAL ENGINEER

The seal appearing on this document was authorized by Derron S. Vincik P.E. 84028, on June 3, 1999.

DATE	BY	REV	REVISION
6/03/99	DV	01	CONSTRUCTION EASEMENT

© 1999 Texas Department of Transportation

Brown & Root
HOUSTON, TEXAS

LOOP 20
WESTBOUND FRONTAGE ROAD

PLAN AND PROFILE
STA 451+00 TO STA 461+00

0 50 100
SCALE: 1"=100' HORIZ
1"=10' VERT

SHEET 4 OF 10

FED RD DIV NO	STATE PROJECT NO	SHEET NO
6	C86-14-23	263

STATE	STATE DIST NO	COUNTY
TEXAS	22	WEBB

CONT	SECT	JOB	HIGHWAY NO
0086	14	023	LOOP 20

J01LOX01.PRO. PRO LV ON = 1-63
J01LOX01.UTI. UTI LV ON = 1-63
J01LOX01.ILL. ILL LV ON = 20
J01LOX01.FND. FND LV ON = 35
J01LOX01.DRN. DRN LV ON = 8
REF FILE(S):
J01LOX01.BCK. BCK LV ON = 1-30
J01LOX01.EOP. EOP LV ON = 1-11,13-17,19-27,29-41,43-53,5
J01LOX01.EOP. ALG LV ON = 1-44
J01LOX01.BDR. BDR LV ON = 5,10,35,45,46,57,60-62
REF FILE(S):

D03FWX06.DGN-11 05-29-99 BAR_HO_ES05 \HCIVIL\CF0039\PHASE2

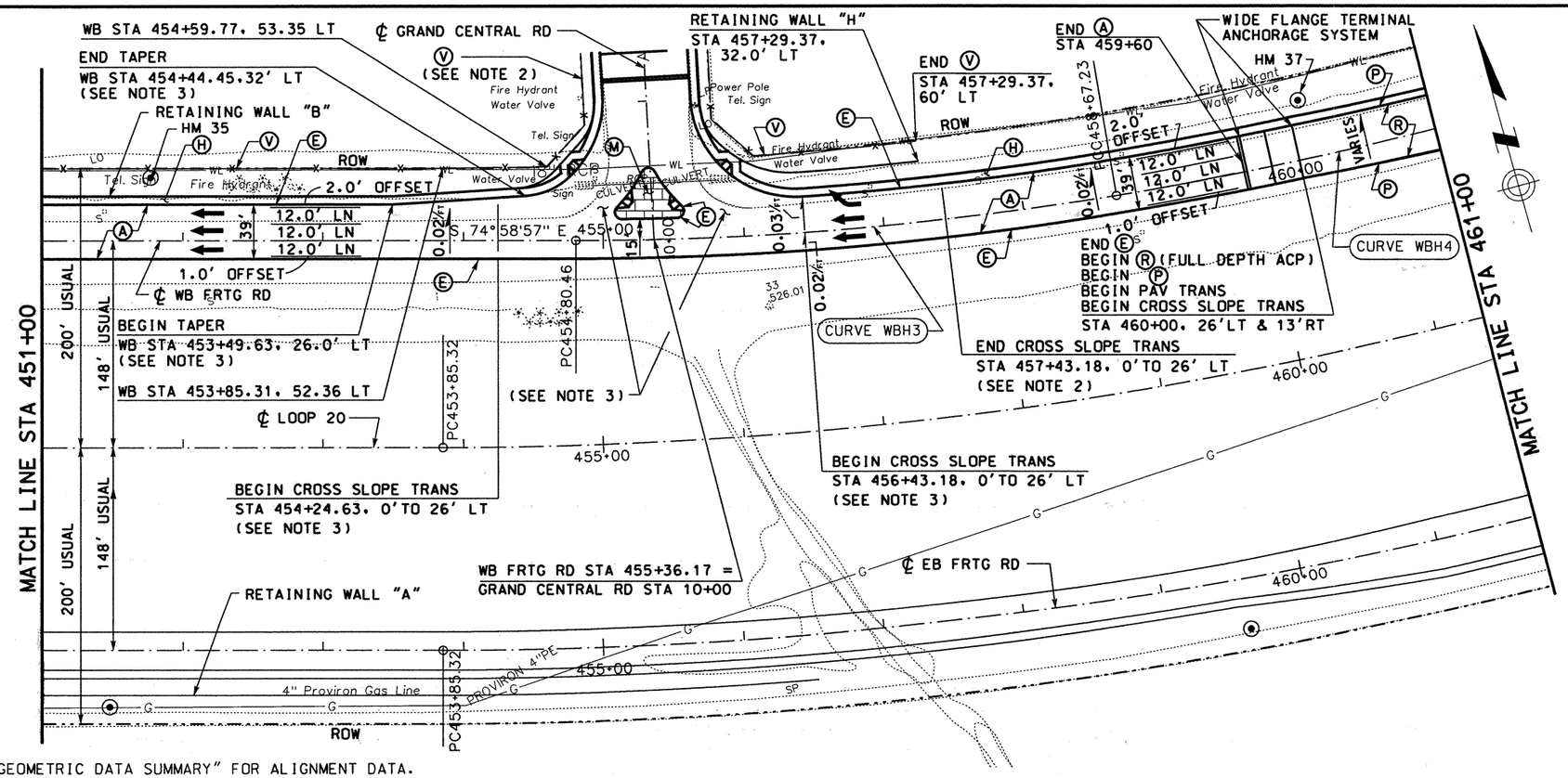

LEGEND:

- Ⓐ CONC PAV (CONT REINF HY STL)(12")
- Ⓑ ASPH CONC PAV (TY A)(4")
- Ⓒ LIME TREATED SUBGRADE (8")
- Ⓓ SINGLE SLOPE CONCRETE BARRIER (SSCB) (TYPE 2)
- Ⓔ TYPE II MONO CURB (6")
- Ⓕ CELL FIBER MULCH SEED (PERM) (RURAL)(CLAY)
- Ⓖ CLASS B RIPRAP (4")
- Ⓗ CONC SIDEWALK (4")
- Ⓘ CONC MEDIAN (6")
- Ⓙ SINGLE SLOPE TRAFFIC RAIL(SSTR) w/ DRAIN SLOTS
- Ⓚ RETAINING WALL
- Ⓛ METAL BEAM GUARD FENCE
- Ⓜ BRICK PAVERS
- Ⓝ REMOVE ASPH CONC PAV
- Ⓞ REMOVE CONC PAV
- Ⓟ TYPE II CURB AND GUTTER (6")
- Ⓠ CONCRETE DRIVEWAYS (6")
- Ⓡ ASPH CONC PAV (TY D)(2")
- Ⓢ ASPH CONC PAV (TY A)(8")
- Ⓣ PLANE ASPH CONC PAV (0 - 1")
- Ⓤ SINGLE SLOPE TRAFFIC RAIL (SSTR)
- Ⓥ CHAINLINK FENCE (6')
- Ⓦ ROADWAY UNDERDRAIN
- Ⓧ WHEELCHAIR RAMP TYPE B

NOTES:

1. SEE "GEOMETRIC DATA SUMMARY" FOR ALIGNMENT DATA.
2. SEE "GRAND CENTRAL RD PLAN AND PROFILE" FOR MORE DETAILS.
3. SEE "GRAND CENTRAL RD INTERSECTION LAYOUT" FOR MORE INFORMATION AND FOR ELEVATIONS AND CROSS SLOPES WITHIN THE INTERSECTION.
4. SEE "RETAINING WALL "B" & "H" LAYOUT" FOR MORE DETAILS.
5. SEE "REMOVAL LAYOUT" FOR MORE DETAILS.

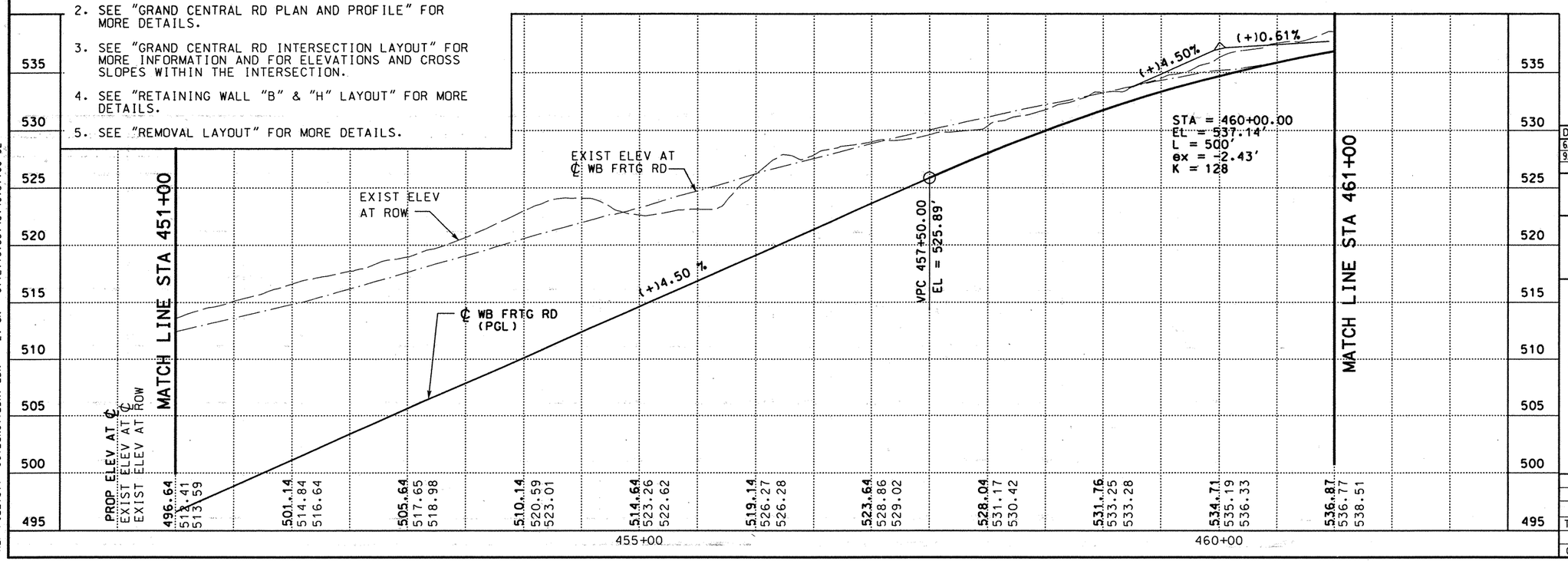

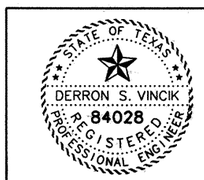

The seal appearing on this document was authorized by Derron S. Vincik P.E. 84028, on September 30, 1999.

DATE	BY	REV	REVISION
6/03/99	DV	01	CONSTRUCTION EASEMENT
9/29/99	DV	02	RETAINING WALL "B" & "H"

© 1999 Texas Department of Transportation

Brown & Root
HOUSTON, TEXAS

LOOP 20
WESTBOUND FRONTAGE ROAD

PLAN AND PROFILE
STA 451+00 TO STA 461+00

0 50 100
SCALE: 1"=100' HORIZ
1"=10' VERT

SHEET 4 OF 10

FED RD DIV NO	STATE PROJECT NO		SHEET NO
6	C86-14-23		263
STATE	STATE DIST NO		COUNTY
TEXAS	22		WEBB
CONT	SECT	JOB	HIGHWAY NO
0086	14	023	LOOP 20

J01LOX01.EOP, eEOP LV ON = 1-17,19-63
J01LOX01.EOP, EOP2 LV ON = 1-17,19-23,25-36,38-47
J01LOX01.PRO, PRO LV ON = 1-49,51-59,61-63
J01LOX01.UTI, UTI LV ON = 1-63
J01LOX01.ILL, ILL LV ON = 19

J01LOX01.BCK, BCK LV ON = 1-30
J01LOX01.EOP, EOP LV ON = 1-17,19-23,25-36,38-47
J01LOX01.EOP, ALG LV ON = 1-8,10-25,28-39
J01LOX01.BDR, BDR LV ON = 6,12,16,35,45,46,57,60-62

REF FILE(S): D03FWX06.DGN-13 09-29-99 BAR_HO_ES05 \HCIVIL\CF0039\PHASE2

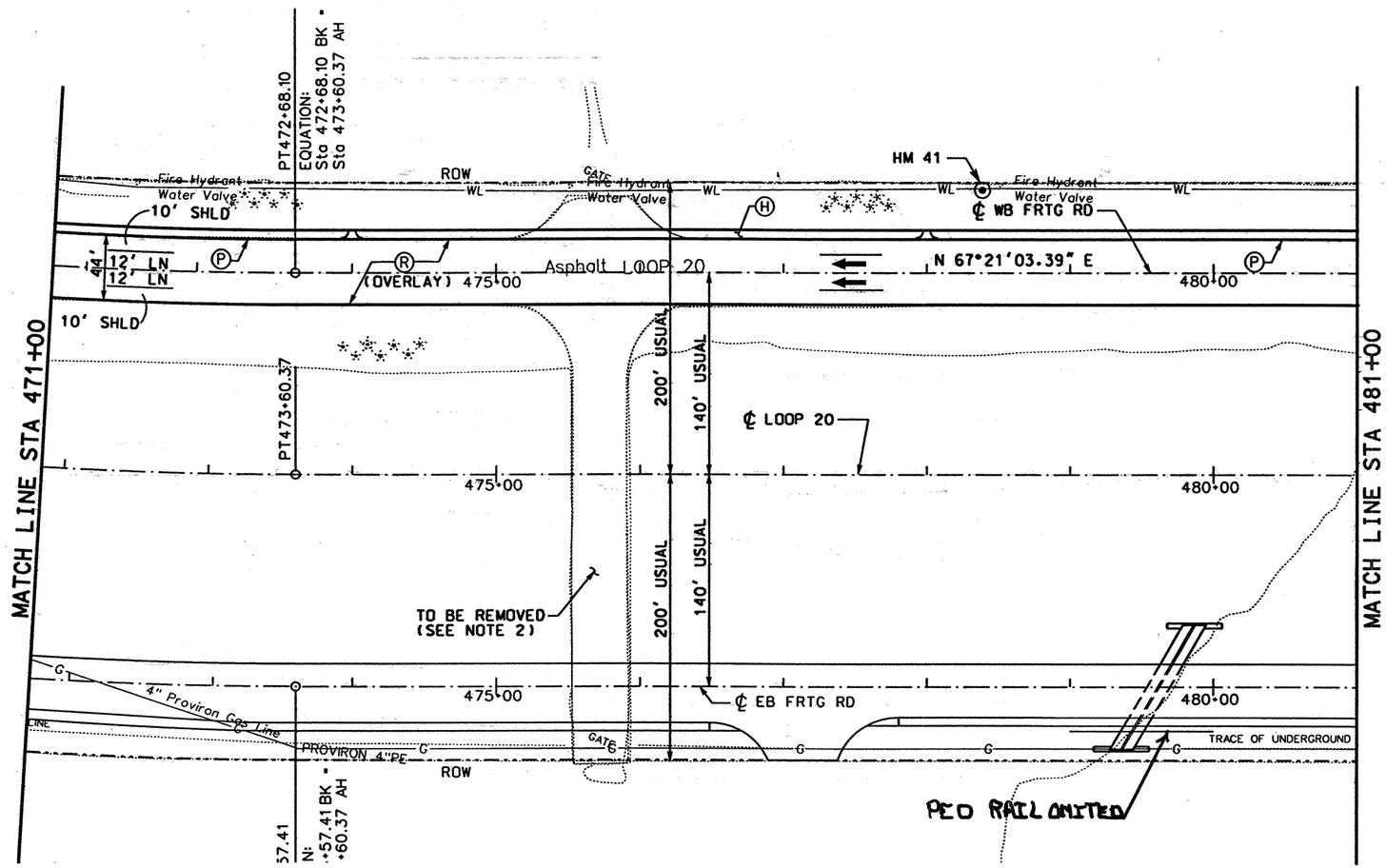

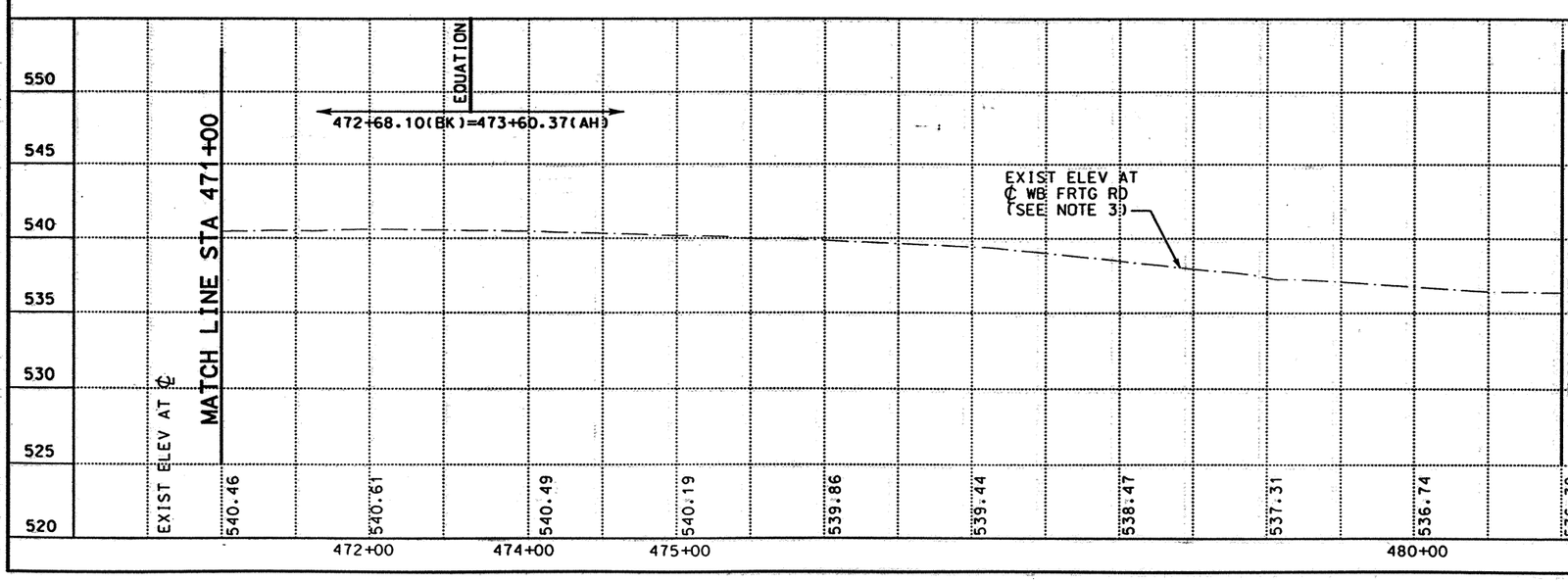

LEGEND:

- Ⓐ CONC PAV (CONT REINF HY STL)(12")
- Ⓑ ASPH CONC PAV (TY A)(4")
- Ⓒ LIME TREATED SUBGRADE (8")
- Ⓓ SINGLE SLOPE CONCRETE BARRIER (SSCB) (TYPE 2)
- Ⓔ TYPE II MONO CURB (6")
- Ⓕ CELL FIBER MULCH SEED (PERM) (RURAL)(CLAY)
- Ⓖ CLASS B RIPRAP (4")
- Ⓗ CONC SIDEWALK (4")
- Ⓘ CONC MEDIAN (6")
- Ⓙ SINGLE SLOPE TRAFFIC RAIL(SSTR) w/ DRAIN SLOTS
- Ⓚ RETAINING WALL
- Ⓛ METAL BEAM GUARD FENCE
- Ⓜ BRICK PAVERS
- Ⓝ REMOVE ASPH CONC PAV
- Ⓞ REMOVE CONC PAV
- Ⓟ TYPE II CURB AND GUTTER (6")
- Ⓠ CONCRETE DRIVEWAYS (6")
- Ⓡ ASPH CONC PAV (TY D)(2")
- Ⓢ ASPH CONC PAV (TY A)(8")
- Ⓣ PLANE ASPH CONC PAV (0 - 1")
- Ⓤ SINGLE SLOPE TRAFFIC RAIL (SSTR)
- Ⓥ CHAINLINK FENCE (6')
- Ⓦ ROADWAY UNDERDRAIN
- Ⓧ WHEELCHAIR RAMP TYPE B

NOTES:

1. SEE "GEOMETRIC DATA SUMMARY" FOR ALIGNMENT DATA.
2. SEE "REMOVAL LAYOUT" FOR MORE DETAILS.
3. APPLY 2" ACP OVERLAY (TY D) ABOVE EXIST PAV.

STATE OF TEXAS
DERRON S. VINCIK
84028
REGISTERED PROFESSIONAL ENGINEER

The seal appearing on this document was authorized by Derron S. Vincik P.E. 84028, on April 2, 1999.

Derron S. Vincik

DATE	BY	REV	REVISION

© 1999 Texas Department of Transportation

Brown & Root
HOUSTON, TEXAS

LOOP 20
WESTBOUND FRONTAGE ROAD

PLAN AND PROFILE
STA 471+00 TO STA 481+00

0 50 100
SCALE: 1"=100' HORIZ
1"=10' VERT

SHEET 6 OF 10

FED RD DIV NO	STATE PROJECT NO		SHEET NO
6	C86-14-23		265
STATE	STATE DIST NO	COUNTY	
TEXAS	22	WEBB	
CONT	SECT	JOB	HIGHWAY NO
0086	14	023	LOOP 20

REF FILE(S): J01LOX01.PRO, J01LOX01.UTI, J01LOX01.ILL, J01LOX01.FND, J01LOX01.DRN, LV ON = 1-63, LV ON = 1-63, LV ON = 20, LV ON = 35, LV ON = 8

REF FILE(S): J01LOX01.BCK, J01LOX01.EOP, J01LOX01.EOP, J01LOX01.BDR, LV ON = 1-30, LV ON = 1-11,13-17,19-27,29-41,43-53,5, LV ON = 1-44, LV ON = 5,10,35,45,46,57,60-62

003FWX08.DGN-09 04-01-99 BAR_HO_ES05 \HCIVIL\CF0039\PHASE2

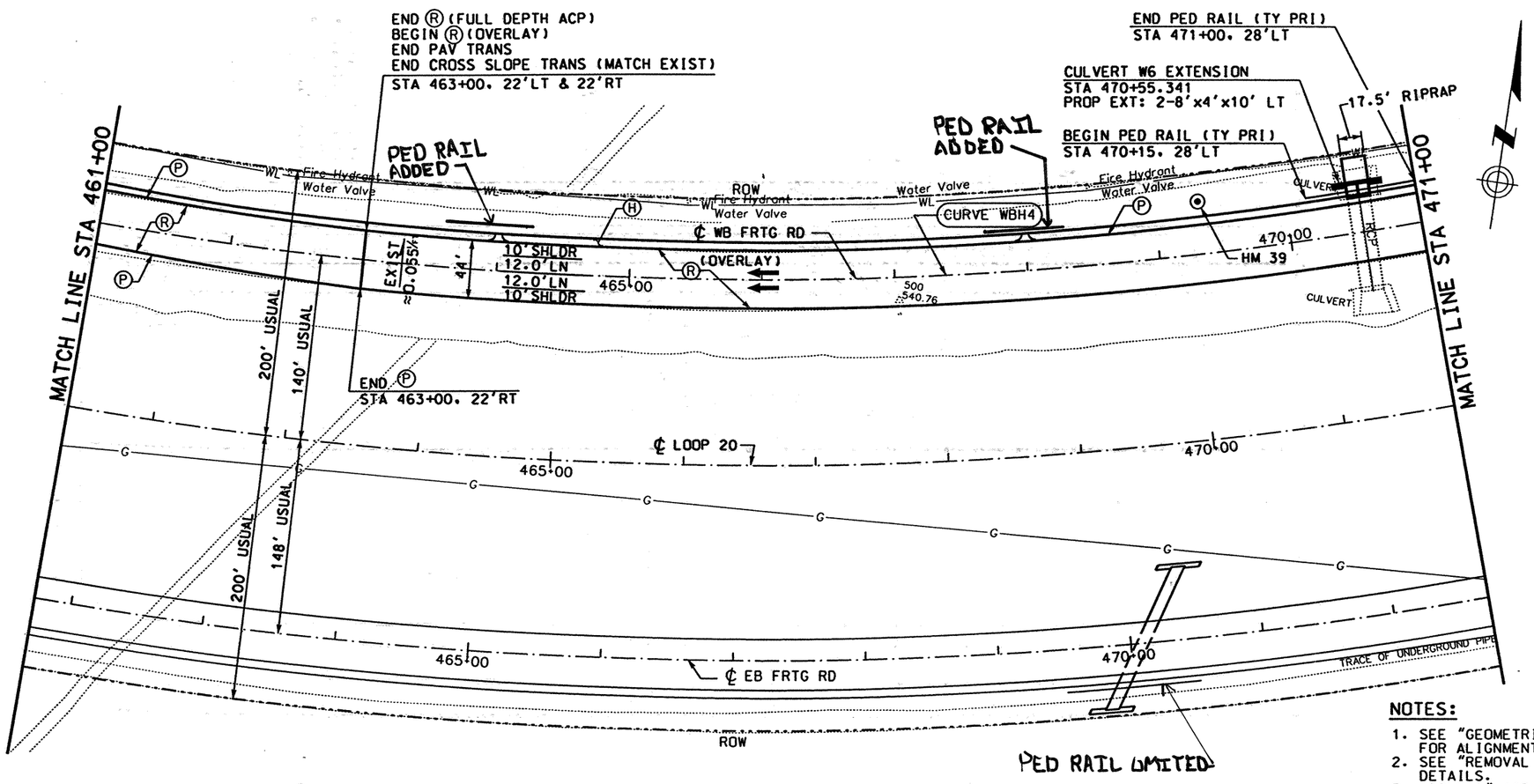

LEGEND:

- Ⓐ CONC PAV (CONT REINF HY STL)(12")
- Ⓑ ASPH CONC PAV (TY A)(4")
- Ⓒ LIME TREATED SUBGRADE (8")
- Ⓓ SINGLE SLOPE CONCRETE BARRIER (SSCB) (TYPE 2)
- Ⓔ TYPE II MONO CURB (6")
- Ⓕ CELL FIBER MULCH SEED (PERM) (RURAL)(CLAY)
- Ⓖ CLASS B RIPRAP (4")
- Ⓗ CONC SIDEWALK (4")
- Ⓘ CONC MEDIAN (6")
- Ⓙ SINGLE SLOPE TRAFFIC RAIL(SSTR) w/ DRAIN SLOTS
- Ⓚ RETAINING WALL
- Ⓛ METAL BEAM GUARD FENCE
- Ⓜ BRICK PAVERS
- Ⓝ REMOVE ASPH CONC PAV
- Ⓞ REMOVE CONC PAV
- Ⓟ TYPE II CURB AND GUTTER (6")
- Ⓠ CONCRETE DRIVEWAYS (6")
- Ⓡ ASPH CONC PAV (TY D)(2")
- Ⓢ ASPH CONC PAV (TY A)(8")
- Ⓣ PLANE ASPH CONC PAV (0 - 1")
- Ⓤ SINGLE SLOPE TRAFFIC RAIL (SSTR)
- Ⓥ CHAINLINK FENCE (6')
- Ⓦ ROADWAY UNDERDRAIN
- Ⓧ WHEELCHAIR RAMP TYPE B

NOTES:

1. SEE "GEOMETRIC DATA SUMMARY" FOR ALIGNMENT DATA.
2. SEE "REMOVAL LAYOUT" FOR MORE DETAILS.
3. APPLY 2" ACP OVERLAY (TY D) ABOVE EXIST PAV.
4. SEE CULVERT LAYOUT FOR MORE DETAILS.

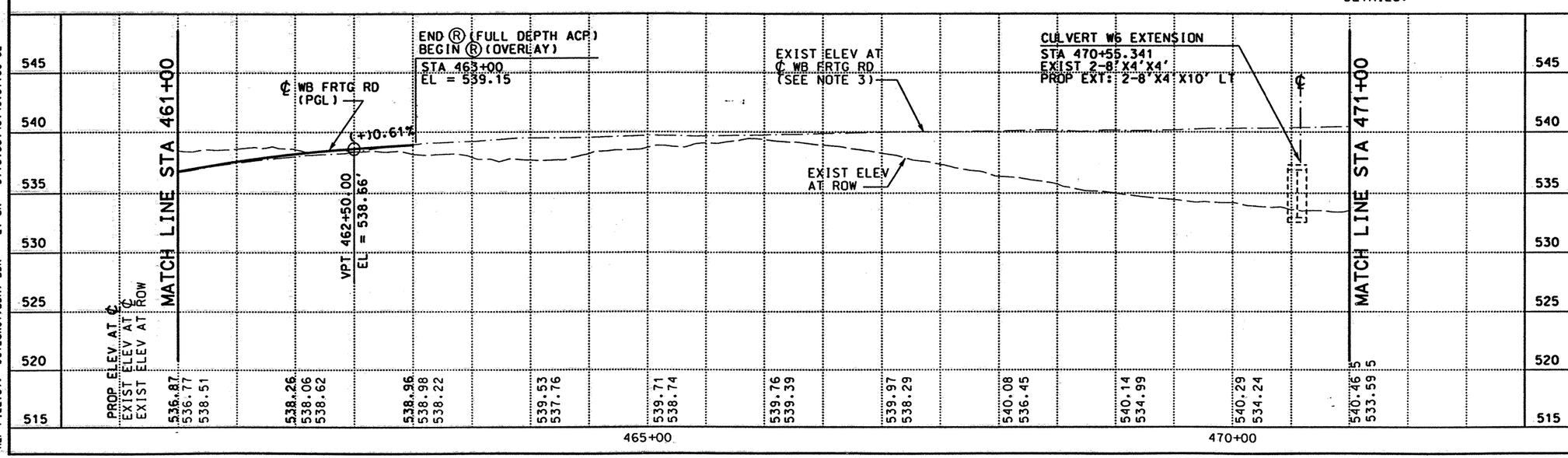

The seal appearing on this document was authorized by Derron S. Vincik P.E. 84028, on April 2, 1999.

DATE	BY	REV	REVISION

©1999 Texas Department of Transportation

Brown & Root
HOUSTON, TEXAS

LOOP 20
WESTBOUND FRONTAGE ROAD

PLAN AND PROFILE
STA 461+00 TO STA 471+00

0 50 100
SCALE: 1"=100' HORIZ
1"=10' VERT

SHEET 5 OF 10

FED RD DIV NO	STATE PROJECT NO		SHEET NO
6	C86-14-23		264
STATE	STATE DIST NO		COUNTY
TEXAS	22		WEBB
CONT	SECT	JOB	HIGHWAY NO
0086	14	023	LOOP 20

REF FILE(S): J01LOX01.PRO, PRO LV ON = 1-63
J01LOX01.UTI, UTI LV ON = 1-63
J01LOX01.ILL, ILL LV ON = 20
J01LOX01.FND, FND LV ON = 35
J01LOX01.DRN, DRN LV ON = 8

REF FILE(S): J01LOX01.BCK, BCK LV ON = 1-30
J01LOX01.EOP, EOP LV ON = 1-11,13-17,19-27,29-41,43-53,5
J01LOX01.EOP, ALG LV ON = 1-44
J01LOX01.BDR, BDR LV ON = 5,10,35,45,46,57,60-62

04-01-99 BAR_HO_ES05 \HOIVIL\CF0039\PHASE2

D03FWX07.DGN-12

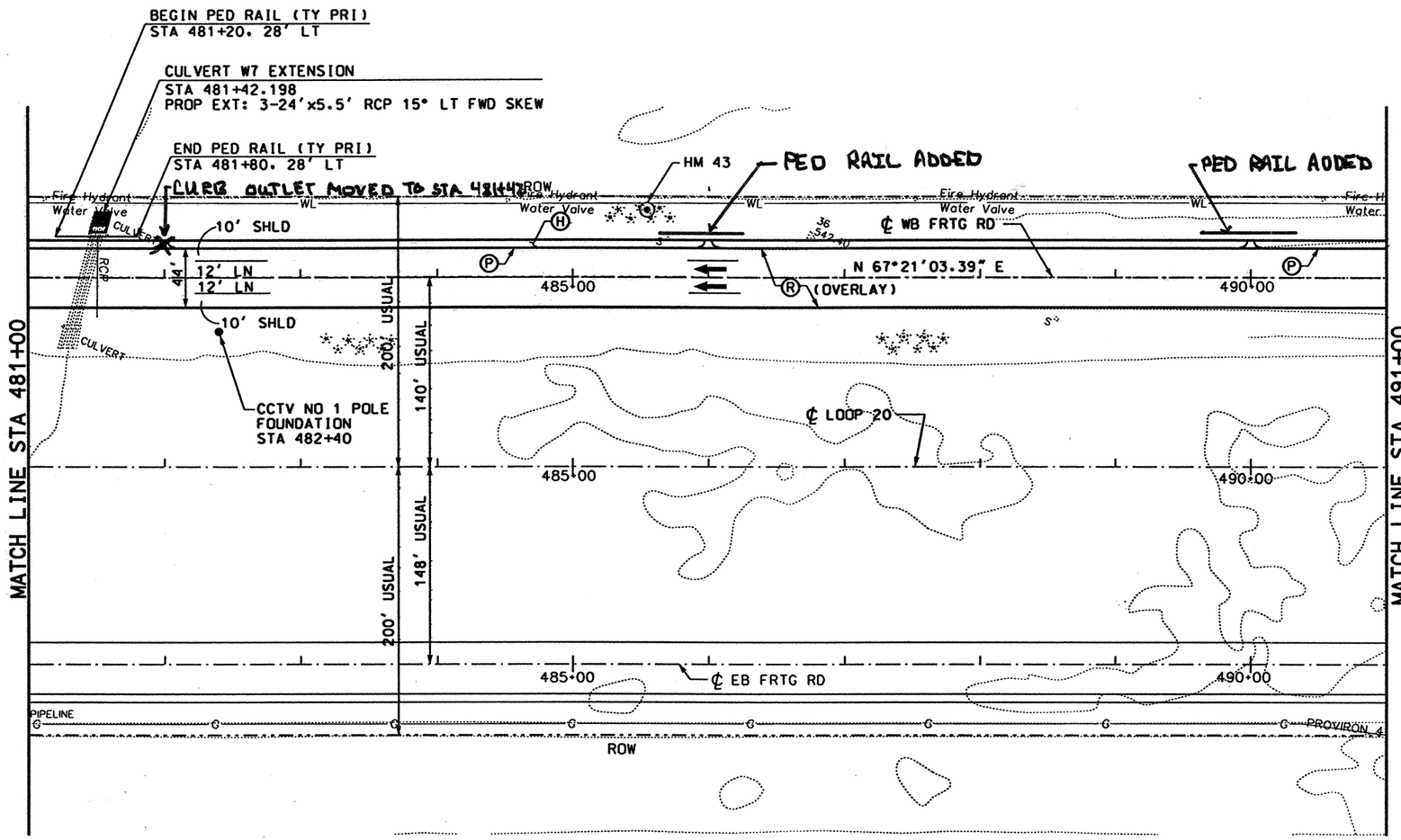

LEGEND:

- Ⓐ CONC PAV (CONT REINF HY STL)(12")
- Ⓑ ASPH CONC PAV (TY A)(4")
- Ⓒ LIME TREATED SUBGRADE (8")
- Ⓓ SINGLE SLOPE CONCRETE BARRIER (SSCB) (TYPE 2)
- Ⓔ TYPE II MONO CURB (6")
- Ⓕ CELL FIBER MULCH SEED (PERM) (RURAL)(CLAY)
- Ⓖ CLASS B RIPRAP (4")
- Ⓗ CONC SIDEWALK (4")
- Ⓘ CONC MEDIAN (6")
- Ⓙ SINGLE SLOPE TRAFFIC RAIL(SSTR) w/ DRAIN SLOTS
- Ⓚ RETAINING WALL
- Ⓛ METAL BEAM GUARD FENCE
- Ⓜ BRICK PAVERS
- Ⓝ REMOVE ASPH CONC PAV
- Ⓞ REMOVE CONC PAV
- Ⓟ TYPE II CURB AND GUTTER (6")
- Ⓠ CONCRETE DRIVEWAYS (6")
- Ⓡ ASPH CONC PAV (TY D)(2")
- Ⓢ ASPH CONC PAV (TY A)(8")
- Ⓣ PLANE ASPH CONC PAV (0 - 1")
- Ⓤ SINGLE SLOPE TRAFFIC RAIL (SSTR)
- Ⓥ CHAINLINK FENCE (6')
- Ⓦ ROADWAY UNDERDRAIN
- Ⓧ WHEELCHAIR RAMP TYPE B

NOTES:

1. SEE "GEOMETRIC DATA SUMMARY" FOR ALIGNMENT DATA.
2. APPLY 2" ACP OVERLAY (TY D) ABOVE EXIST PAV.
3. SEE CULVERT LAYOUT FOR MORE DETAILS.

STATE OF TEXAS
DERRON S. VINCIK
84028
REGISTERED PROFESSIONAL ENGINEER

The seal appearing on this document was authorized by Derron S. Vincik P.E. 84028, on April 2, 1999.

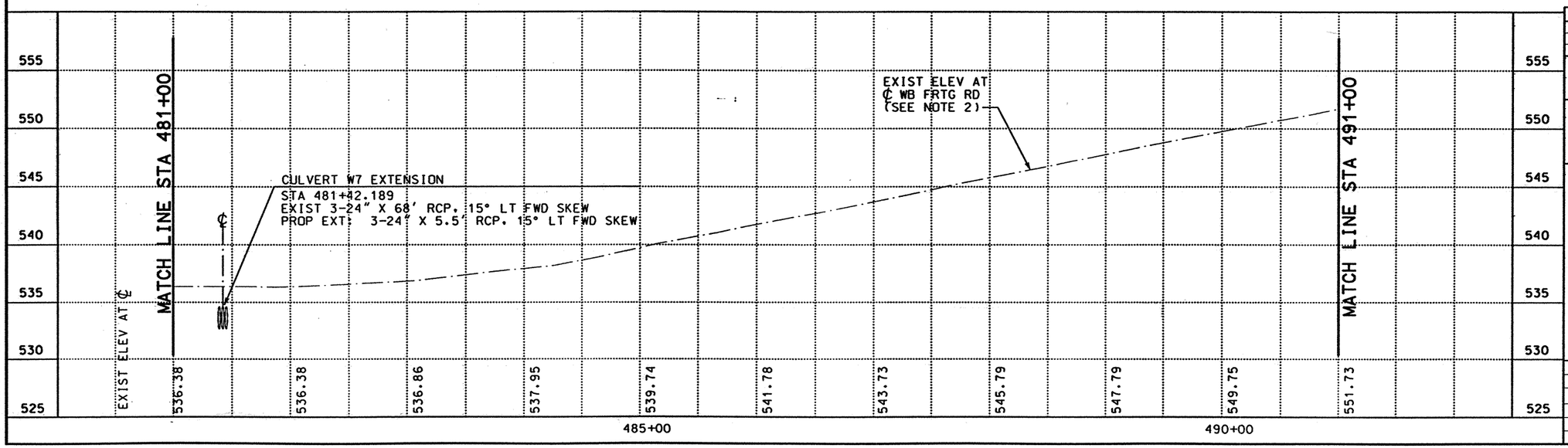

DATE	BY	REV	REVISION

© 1999 Texas Department of Transportation

Brown & Root
HOUSTON, TEXAS

LOOP 20
WESTBOUND FRONTAGE ROAD

PLAN AND PROFILE
STA 481+00 TO STA 491+00

0 50 100
SCALE: 1"=100' HORIZ
1"=10' VERT

SHEET 7 OF 10

FED RD DIV NO	STATE PROJECT NO		SHEET NO
6	C86-14-23		166
STATE	STATE DIST NO		COUNTY
TEXAS	22		WEBB
CONT	SECT	JOB	HIGHWAY NO
0086	14	023	LOOP 20

REF FILE(S): J01LDX01.PRO, PRO LV ON = 1-63
J01LDX01.UTI, UTI LV ON = 1-63
J01LDX01.ILL, ILL LV ON = 20
J01LDX01.FND, FND LV ON = 35
J01LDX01.DRN, DRN LV ON = 8

REF FILE(S): J01LDX01.BCK, BCK LV ON = 1-30
J01LDX01.EDP, EDP LV ON = 1-11,13-17,19-27,29-41,43-53,5
J01LDX01.EDP, ALG LV ON = 1-44
J01LDX01.BDR, BDR LV ON = 5,10,35,45,46,57,60-62

D03FWX09.DGN-12 04-02-99 BAR_HO_ES05 \HCIVIL\CF0039\PHASE2

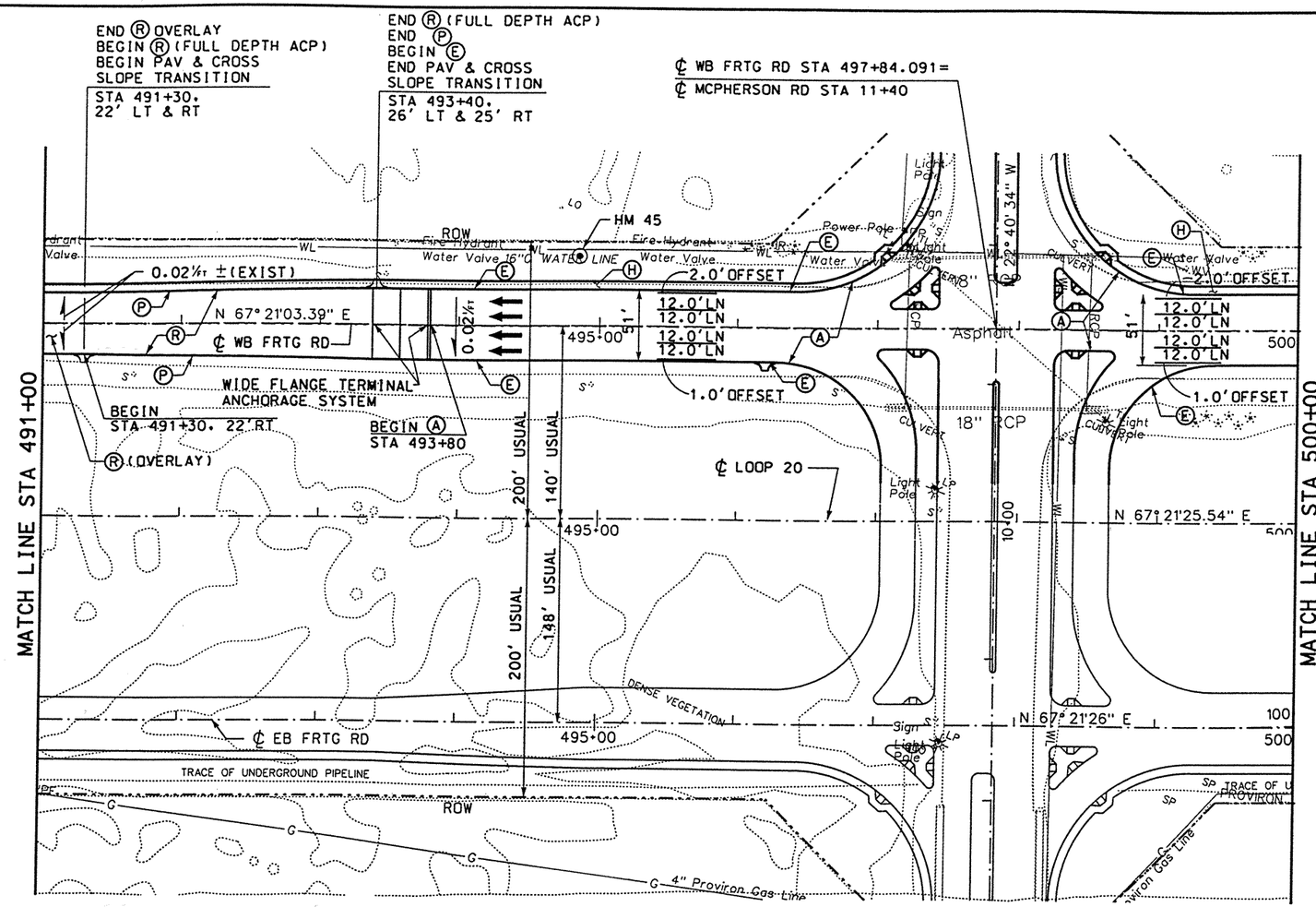

LEGEND:

- Ⓐ CONC PAV (CONT REINF HY STL)(12")
- Ⓑ ASPH CONC PAV (TY A)(4")
- Ⓒ LIME TREATED SUBGRADE (8")
- Ⓓ SINGLE SLOPE CONCRETE BARRIER (SSCB) (TYPE 2)
- Ⓔ TYPE II MONO CURB (6")
- Ⓕ CELL FIBER MULCH SEED (PERM) (RURAL)(CLAY)
- Ⓖ CLASS B RIPRAP (4")
- Ⓗ CONC SIDEWALK (4")
- Ⓘ CONC MEDIAN (6")
- Ⓙ SINGLE SLOPE TRAFFIC RAIL(SSTR) w/ DRAIN SLOTS
- Ⓚ RETAINING WALL
- Ⓛ METAL BEAM GUARD FENCE
- Ⓜ BRICK PAVERS
- Ⓝ REMOVE ASPH CONC PAV
- Ⓞ REMOVE CONC PAV
- Ⓟ TYPE II CURB AND GUTTER (6")
- Ⓠ CONCRETE DRIVEWAYS (6")
- Ⓡ ASPH CONC PAV (TY D)(2")
- Ⓢ ASPH CONC PAV (TY A)(8")
- Ⓣ PLANE ASPH CONC PAV (0 - 1")
- Ⓤ SINGLE SLOPE TRAFFIC RAIL (SSTR)
- Ⓥ CHAINLINK FENCE (6')
- Ⓦ ROADWAY UNDERDRAIN
- Ⓧ WHEELCHAIR RAMP TYPE B

NOTES:

1. SEE "GEOMETRIC DATA SUMMARY" FOR ALIGNMENT DATA.
2. SEE "McPHERSON ROAD PLAN AND PROFILE" AND "McPHERSON ROAD INTERSECTION LAYOUT" FOR MORE DETAILS.
3. SEE "McPHERSON ROAD CONTOUR GRADING PLAN" FOR CROSS SLOPES AND ELEVATIONS WITHIN THE INTERSECTION.
4. SEE "REMOVAL LAYOUT" FOR MORE DETAILS.

STATE OF TEXAS
DERRON S. VINCIK
84028
REGISTERED PROFESSIONAL ENGINEER

The seal appearing on this document was authorized by Derron S. Vincik P.E. 84028, on June 3, 1999.

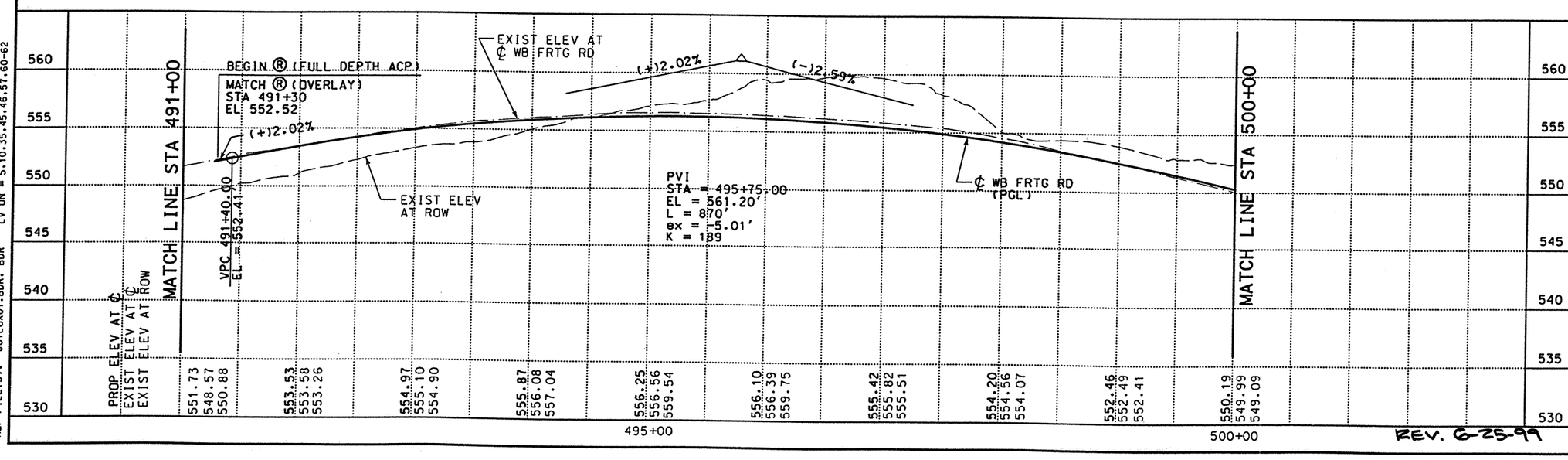

REV. 6-25-99

DATE	BY	REV	REVISION
6/3/99	DV	01	WIDE FLANGE TERMINAL ANCHORAGE SYSTEM

© 1999 Texas Department of Transportation

Brown & Root
HOUSTON, TEXAS

LOOP 20
WESTBOUND FRONTAGE ROAD

PLAN AND PROFILE
STA 491+00 TO END

0 50 100
SCALE: 1"=100' HORIZ
1"=10' VERT

SHEET 8 OF 10

FED RD DIV NO	STATE PROJECT NO		SHEET NO
6	C86-14-23		267
STATE	STATE DIST NO	COUNTY	
TEXAS	22	WEBB	
CONT	SECT	JOB	HIGHWAY NO
0086	14	023	LOOP 20

REF FILE(S): J01LOX01.PRO, PRO LV ON = 1-63
J01LOX01.UTI, UTI LV ON = 1-63
J01LOX01.ILL, ILL LV ON = 20
J01LOX01.FND, FND LV ON = 35
J01LOX01.DRN, DRN LV ON = 8

REF FILE(S): J01LOX01.BCK, BCK LV ON = 1-30
J01LOX01.EOP, EOP LV ON = 1-11,13-17,19-27,29-41,43-53,5
J01LOX01.EOP, ALG LV ON = 1-44
J01LOX01.BDR, BDR LV ON = 5,10,35,45,46,57,60-62

D03FWX10.DGN-10 05-27-99 BAR_HO_ES05 \HCIVIL\CF0039\PHASE2

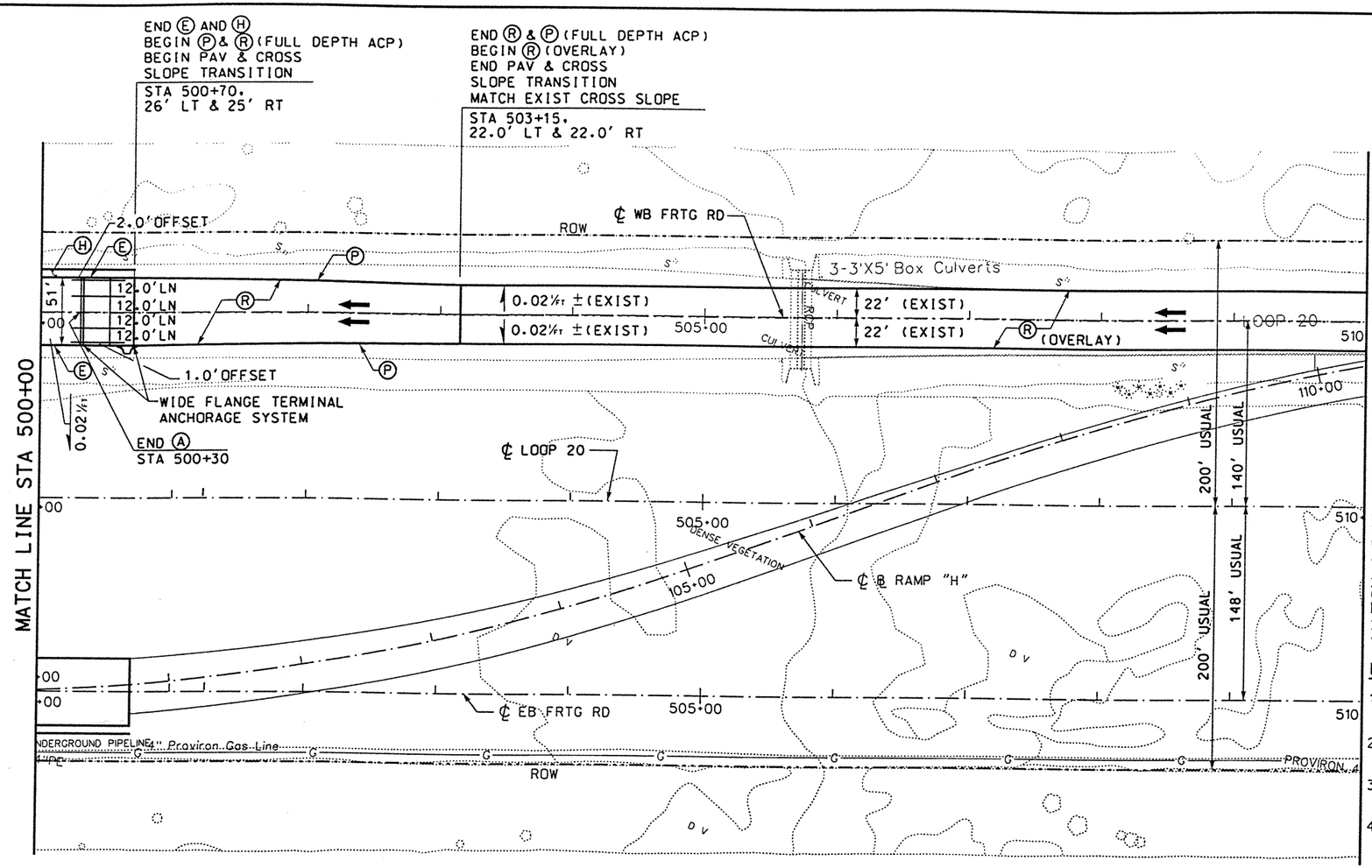

LEGEND:

- Ⓐ CONC PAV (CONT REINF HY STL)(12")
- Ⓑ ASPH CONC PAV (TY A)(4")
- Ⓒ LIME TREATED SUBGRADE (8")
- Ⓓ SINGLE SLOPE CONCRETE BARRIER (SSCB) (TYPE 2)
- Ⓔ TYPE II MONO CURB (6")
- Ⓕ CELL FIBER MULCH SEED (PERM) (RURAL)(CLAY)
- Ⓖ CLASS B RIPRAP (4")
- Ⓗ CONC SIDEWALK (4")
- Ⓘ CONC MEDIAN (6")
- Ⓙ SINGLE SLOPE TRAFFIC RAIL(SSTR) w/ DRAIN SLOTS
- Ⓚ RETAINING WALL
- Ⓛ METAL BEAM GUARD FENCE
- Ⓜ BRICK PAVERS
- Ⓝ REMOVE ASPH CONC PAV
- Ⓞ REMOVE CONC PAV
- Ⓟ TYPE II CURB AND GUTTER (6")
- Ⓠ CONCRETE DRIVEWAYS (6")
- Ⓡ ASPH CONC PAV (TY D)(2")
- Ⓢ ASPH CONC PAV (TY A)(8")
- Ⓣ PLANE ASPH CONC PAV (0 - 1")
- Ⓤ SINGLE SLOPE TRAFFIC RAIL (SSTR)
- Ⓥ CHAINLINK FENCE (6')
- Ⓦ ROADWAY UNDERDRAIN
- Ⓧ WHEELCHAIR RAMP TYPE B

NOTES:

1. SEE "GEOMETRIC DATA SUMMARY" FOR ALIGNMENT DATA.
2. SEE "RAMP "H" PLAN AND PROFILE" FOR MORE DETAILS.
3. APPLY 2" ACP OVERLAY (TY D) ABOVE EXIST PAV.
4. SEE "REMOVAL LAYOUT" FOR MORE DETAILS.

STATE OF TEXAS
DERRON S. VINCIK
R. 84028
REGISTERED PROFESSIONAL ENGINEER

The seal appearing on this document was authorized by Derron S. Vincik P.E. 84028, on June 3, 1999.

Derron S. Vincik

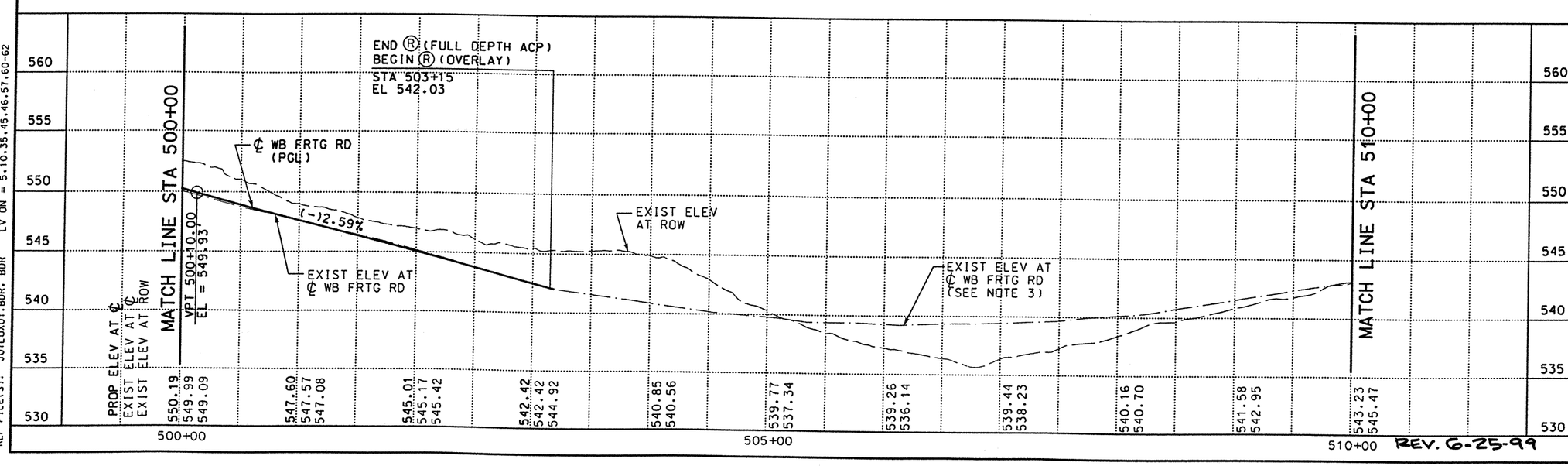

REV. 6-25-99

DATE	BY	REV	REVISION
6/3/99	DV	01	WIDE FLANGE TERMINAL ANCHORAGE SYSTEM

© 1999 Texas Department of Transportation

Brown & Root
HOUSTON, TEXAS

LOOP 20
WESTBOUND FRONTAGE ROAD

PLAN AND PROFILE
STA 500+00 TO 510+00

0 50 100
SCALE: 1"=100' HORIZ
1"=10' VERT

SHEET 9 OF 10

FED RD DIV NO	STATE PROJECT NO	SHEET NO
6	C86-14-23	268

STATE	STATE DIST NO	COUNTY
TEXAS	22	WEBB

CONT	SECT	JOB	HIGHWAY NO
0086	14	023	LOOP 20

REF FILE(S): J01LOX01.PRO, PRO LV ON = 1-63
J01LOX01.UTI, UTI LV ON = 1-63
J01LOX01.FND, FND LV ON = 35
J01LOX01.DRN, DRN LV ON = 8

REF FILE(S): J01LOX01.BCK, BCK LV ON = 1-30
J01LOX01.EOP, EOP LV ON = 1-11,13-17,19-27,29-41,43-53,5
J01LOX01.EOP, ALG LV ON = 1-44
J01LOX01.BDR, BDR LV ON = 5,10,35,45,46,57,60-62

DO3FWX1.DGN-05 05-27-99 BAR_HO_ES05 \HCIVIL\CF0039\PHASE2

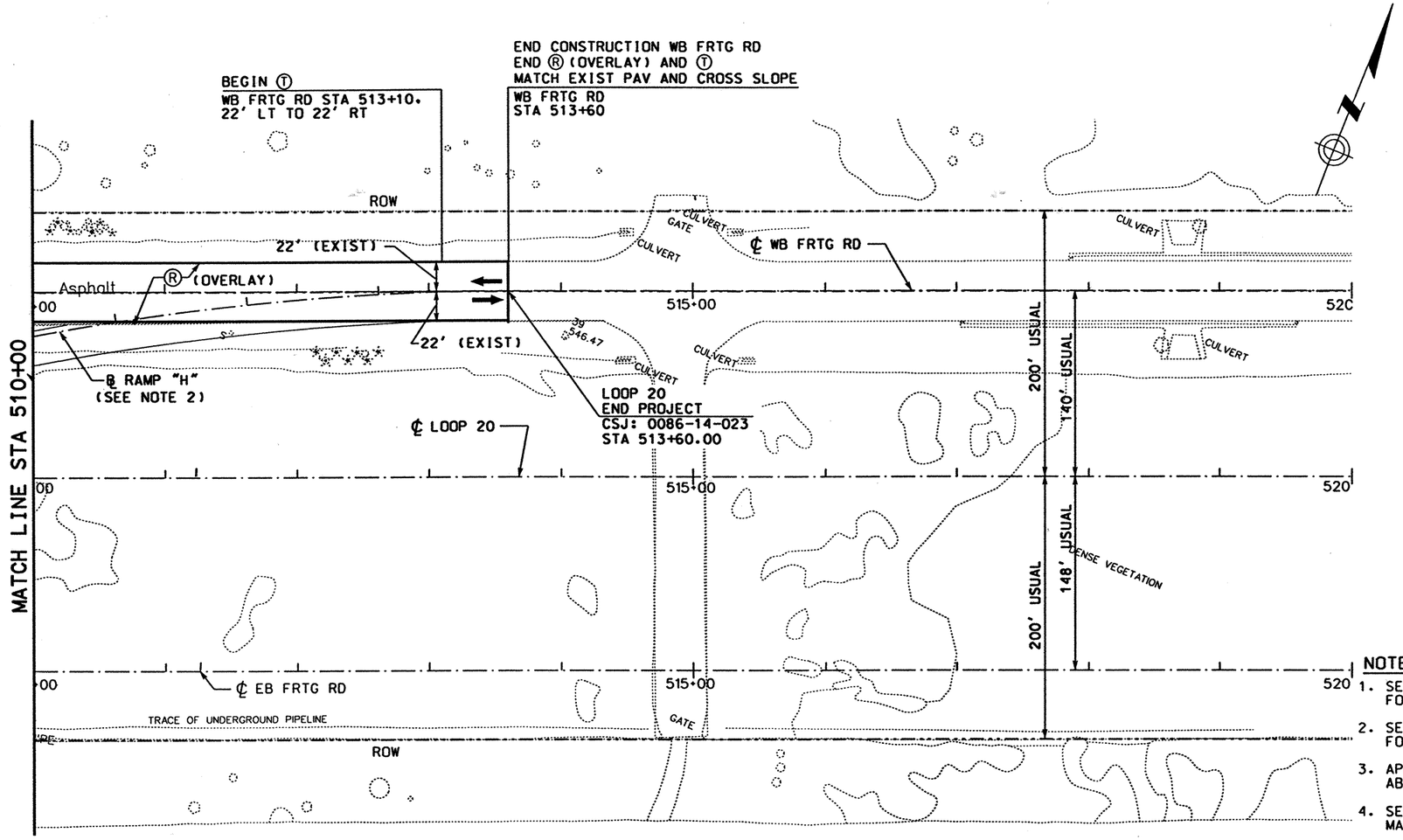

LEGEND:

- Ⓐ CONC PAV (CONT REINF HY STL)(12")
- Ⓑ ASPH CONC PAV (TY A)(4")
- Ⓒ LIME TREATED SUBGRADE (8")
- Ⓓ SINGLE SLOPE CONCRETE BARRIER (SSCB) (TYPE 2)
- Ⓔ TYPE II MONO CURB (6")
- Ⓕ CELL FIBER MULCH SEED (PERM) (RURAL)(CLAY)
- Ⓖ CLASS B RIPRAP (4")
- Ⓗ CONC SIDEWALK (4")
- Ⓘ CONC MEDIAN (6")
- Ⓙ SINGLE SLOPE TRAFFIC RAIL(SSTR) w/ DRAIN SLOTS
- Ⓚ RETAINING WALL
- Ⓛ METAL BEAM GUARD FENCE
- Ⓜ BRICK PAVERS
- Ⓝ REMOVE ASPH CONC PAV
- Ⓞ REMOVE CONC PAV
- Ⓟ TYPE II CURB AND GUTTER (6")
- Ⓠ CONCRETE DRIVEWAYS (6")
- Ⓡ ASPH CONC PAV (TY D)(2")
- Ⓢ ASPH CONC PAV (TY A)(8")
- Ⓣ PLANE ASPH CONC PAV (0 - 1")
- Ⓤ SINGLE SLOPE TRAFFIC RAIL (SSTR)
- Ⓥ CHAINLINK FENCE (6')
- Ⓦ ROADWAY UNDERDRAIN
- Ⓧ WHEELCHAIR RAMP TYPE B

NOTES:

1. SEE "GEOMETRIC DATA SUMMARY" FOR ALIGNMENT DATA.
2. SEE "RAMP "H" PLAN AND PROFILE" FOR MORE DETAILS.
3. APPLY 2" ACP OVERLAY (TY D) ABOVE EXIST PAV.
4. SEE "SIGNING AND PAVEMENT MARKINGS" FOR MORE DETAILS.

STATE OF TEXAS
DERRON S. VINCIK
84028
REGISTERED PROFESSIONAL ENGINEER

The seal appearing on this document was authorized by Derron S. Vincik P.E. 84028, on April 2, 1999.

Derron S. Vincik

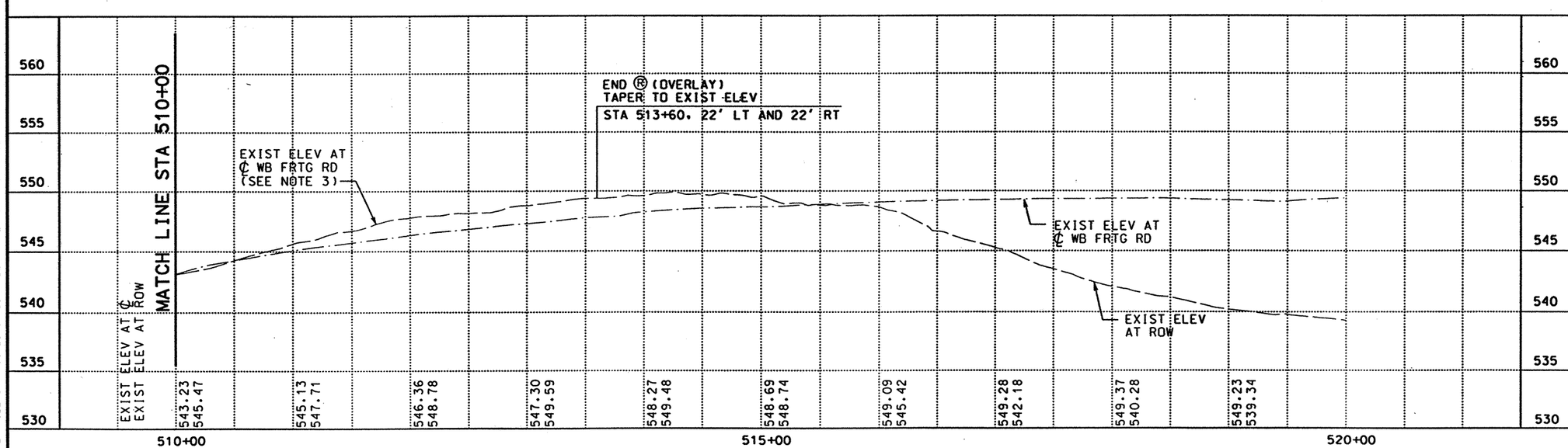

DATE	BY	REV	REVISION

© 1999 Texas Department of Transportation

Brown & Root
HOUSTON, TEXAS

LOOP 20
WESTBOUND FRONTAGE ROAD

PLAN AND PROFILE
STA 510+00 TO 520+00

0 50 100
SCALE: 1"=100' HORIZ
1"=10' VERT

SHEET 10 OF 10

FED RD DIV NO	STATE PROJECT NO	SHEET NO
6	C86-14-23	267

STATE	STATE DIST NO	COUNTY
TEXAS	22	WEBB

CONT	SECT	JOB	HIGHWAY NO
0086	14	023	LOOP 20

REF FILE(S): J01LOX01.PRO, PRO LV ON = 1-63
J01LOX01.UTI, UTI LV ON = 1-63
J01LOX01.ILL, ILL LV ON = 20
J01LOX01.FND, FND LV ON = 35
J01LOX01.DRN, DRN LV ON = 8

REF FILE(S): J01LOX01.BCK, BCK LV ON = 1-30
J01LOX01.EOP, EOP LV ON = 1-11,13-17,19-27,29-41,43-53,5
J01LOX01.EOP, ALG LV ON = 1-44
J01LOX01.BDR, BDR LV ON = 5,10,35,45,46,57,60-62

D03FWX12.DGN-03 03-07-99 BAR_HO_ES05 \HCIVIL\CF0039\PHASE2

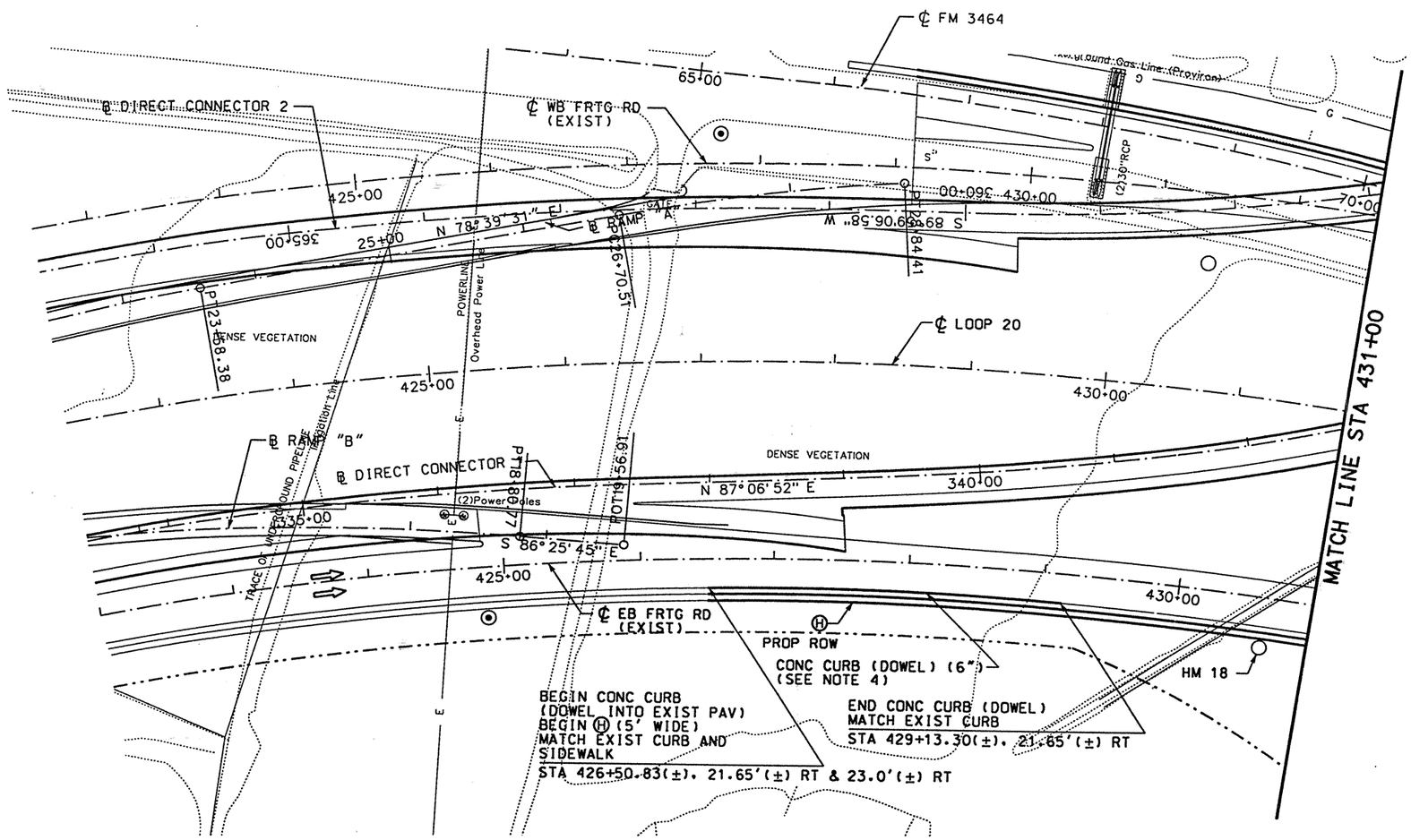

LEGEND:

- Ⓐ CONC PAV (CONT REINF HY STL)(12")
- Ⓑ ASPH CONC PAV (TY A)(4")
- Ⓒ LIME TREATED SUBGRADE (8")
- Ⓓ SINGLE SLOPE CONCRETE BARRIER (SSCB) (TYPE 2)
- Ⓔ TYPE II MONO CURB (6")
- Ⓕ CELL FIBER MULCH SEED (PERM) (RURAL)(CLAY)
- Ⓖ CLASS B RIPRAP (4")
- Ⓗ CONC SIDEWALK (4")
- Ⓘ CONC MEDIAN (6")
- Ⓙ SINGLE SLOPE TRAFFIC RAIL(SSTR) w/ DRAIN SLOTS
- Ⓚ RETAINING WALL
- Ⓛ METAL BEAM GUARD FENCE
- Ⓜ BRICK PAVERS
- Ⓝ REMOVE ASPH CONC PAV
- Ⓞ REMOVE CONC PAV
- Ⓟ TYPE II CURB AND GUTTER (6")
- Ⓠ CONCRETE DRIVEWAYS (6")
- Ⓡ ASPH CONC PAV (TY D)(2")
- Ⓢ ASPH CONC PAV (TY A)(8")
- Ⓣ PLANE ASPH CONC PAV (0 - 1")
- Ⓤ SINGLE SLOPE TRAFFIC RAIL (SSTR)
- Ⓥ CHAINLINK FENCE (6')
- Ⓦ ROADWAY UNDERDRAIN
- Ⓧ WHEELCHAIR RAMP TYPE B

NOTES:

1. SEE "GEOMETRIC DATA SUMMARY" FOR ALIGNMENT DATA.
2. SEE DIRECT CONNECTOR 1 "PLAN & PROFILE" FOR DETAILS.
3. SEE "RAMP B PLAN AND PROFILE" FOR MORE DETAILS.
4. SEE MISCELLANEOUS ROADWAY DETAILS (SHEET NO. 27) FOR MORE INFORMATION

STATE OF TEXAS
DERRON S. VINCIK
84028
REGISTERED PROFESSIONAL ENGINEER

The seal appearing on this document was authorized by Derron S. Vincik P.E. 84028, on April 2, 1999.

Derron S. Vincik

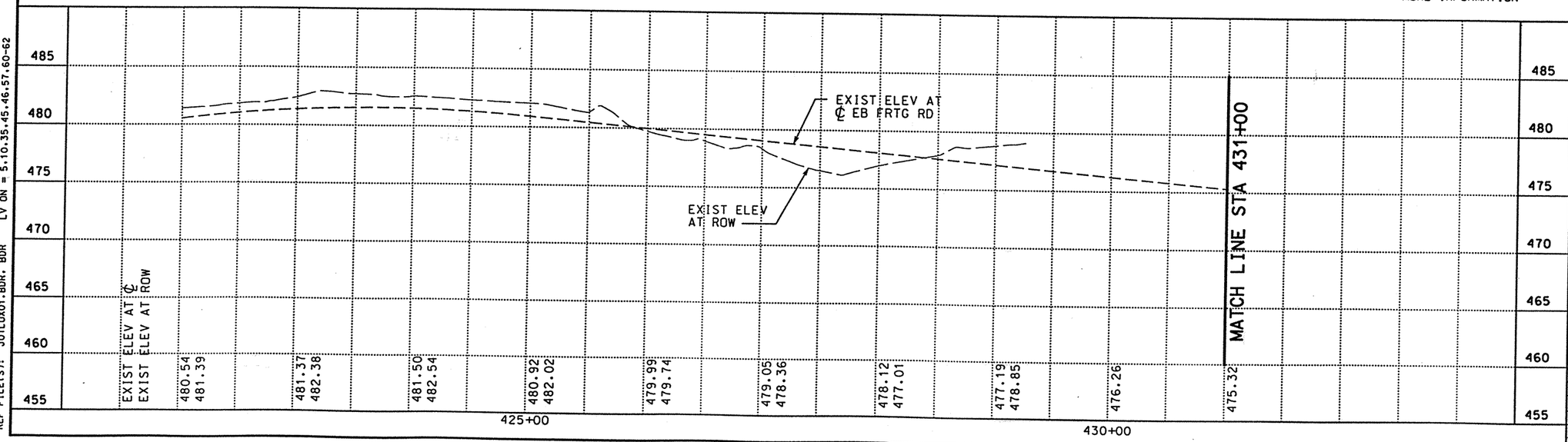

DATE	BY	REV	REVISION

© 1999 Texas Department of Transportation

Brown & Root
HOUSTON, TEXAS

LOOP 20
EASTBOUND FRONTAGE ROAD

PLAN AND PROFILE
STA 422+00 TO STA 432+00

0 50 100
SCALE: 1"=100' HORZ
1"=10' VERT

SHEET 1 OF 8

FED RD DIV NO	STATE PROJECT NO	SHEET NO
6	C86-14-23	170

STATE	STATE DIST NO	COUNTY
TEXAS	22	WEBB

CONT	SECT	JOB	HIGHWAY NO
0086	14	023	LOOP 20

REF FILE(S): J01LOX01.PRO, PRO LV ON = 1-63
J01LOX01.UTI, UTI LV ON = 1-63
J01LOX01.ILL, ILL LV ON = 20
J01LOX01.FND, FND LV ON = 35
J01LOX01.DRN, DRN LV ON = 8

REF FILE(S): J01LOX01.BCK, BCK LV ON = 1-30
J01LOX01.EOP, EOP LV ON = 1-11,13-17,19-27,29-41,43-53,5
J01LOX01.EOP, ALG LV ON = 1-44
J01LOX01.BDR, BDR LV ON = 5,10,35,45,46,57,60-62

D03FEX03.DGN-07 04-02-99 BAR_HO_ES05 \HCIVIL\CF0039\PHASE2

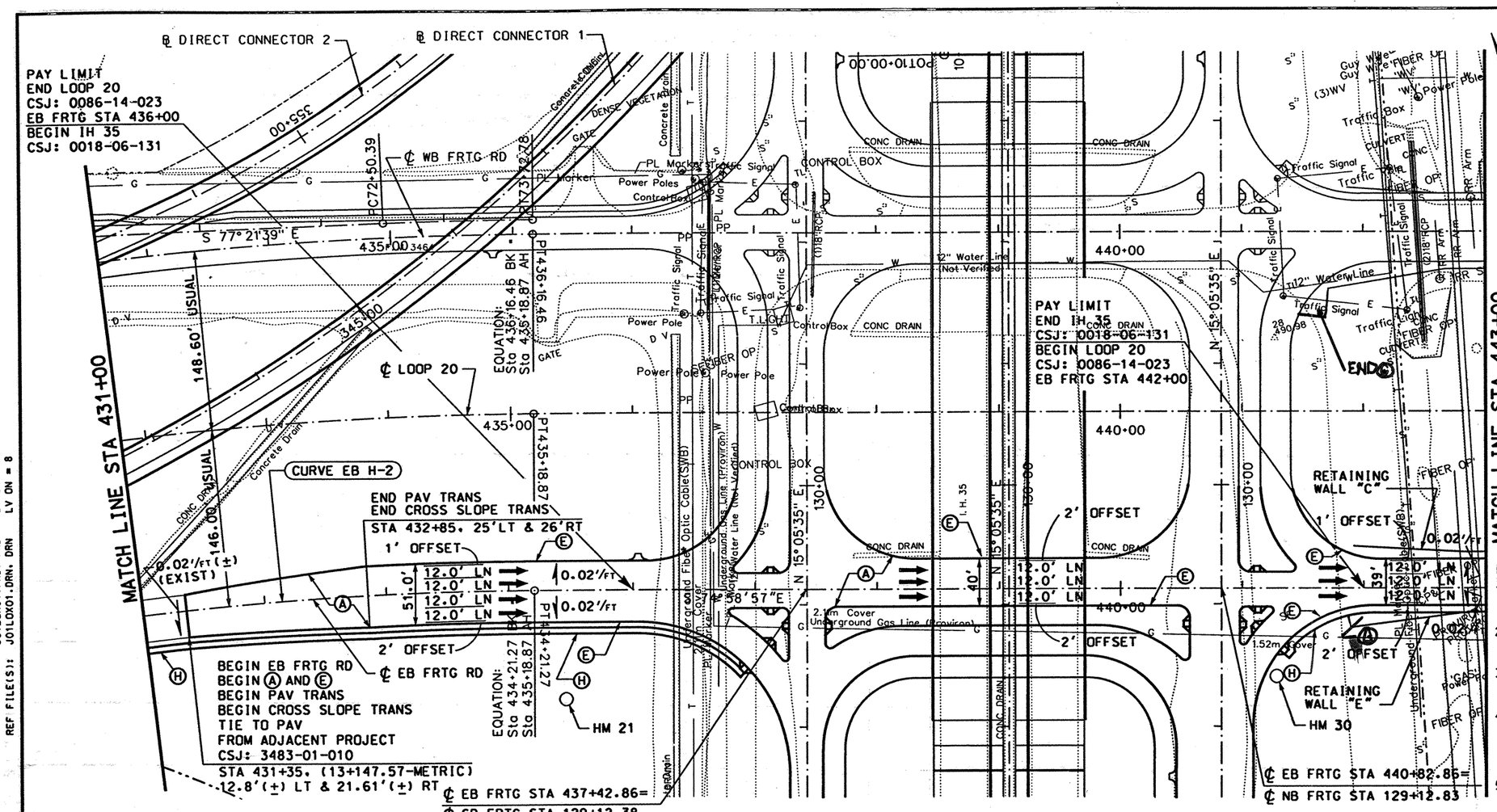

LEGEND:

- (A) CONC PAV (CONT REINF HY STL)(12")
- (B) ASPH CONC PAV (TY A)(4")
- (C) LIME TREATED SUBGRADE (8")
- (D) SINGLE SLOPE CONCRETE BARRIER (SSCB) (TYPE 2)
- (E) TYPE II MONO CURB (6")
- (F) CELL FIBER MULCH SEED (PERM) (RURAL)(CLAY)
- (G) CLASS B RIPRAP (4")
- (H) CONC SIDEWALK (4")
- (I) CONC MEDIAN (6")
- (J) SINGLE SLOPE TRAFFIC RAIL(SSTR) w/ DRAIN SLOTS
- (K) RETAINING WALL
- (L) METAL BEAM GUARD FENCE
- (M) BRICK PAVERS
- (N) REMOVE ASPH CONC PAV
- (O) REMOVE CONC PAV
- (P) TYPE II CURB AND GUTTER (6")
- (Q) CONCRETE DRIVEWAYS (6")
- (R) ASPH CONC PAV (TY D)(2")
- (S) ASPH CONC PAV (TY A)(8")
- (T) PLANE ASPH CONC PAV (0 - 1")
- (U) SINGLE SLOPE TRAFFIC RAIL (SSTR)
- (V) CHAINLINK FENCE (6')
- (W) ROADWAY UNDERDRAIN
- (X) WHEELCHAIR RAMP TYPE B

NOTES:

1. SEE "GEOMETRIC DATA SUMMARY" FOR ALIGNMENT DATA.
2. SEE "LOOP 20 AND IH35 INTERSECTION LAYOUT" FOR MORE DETAILS.
3. SEE "LOOP 20 RETAINING WALL LAYOUT" FOR MORE DETAILS.
4. SEE "LOOP 20 / IH 35 CONTOUR GRADING PLAN" FOR CROSS SLOPES AND ELEVATIONS WITHIN THE INTERSECTION.
5. SEE "REMOVAL LAYOUT" FOR MORE DETAILS.

STATE OF TEXAS
DERRON S. VINCIK
84028
REGISTERED PROFESSIONAL ENGINEER

The seal appearing on this document was authorized by Derron S. Vincik P.E. 84028, on April 2, 1999.

Derron S. Vincik

DATE	BY	REV	REVISION

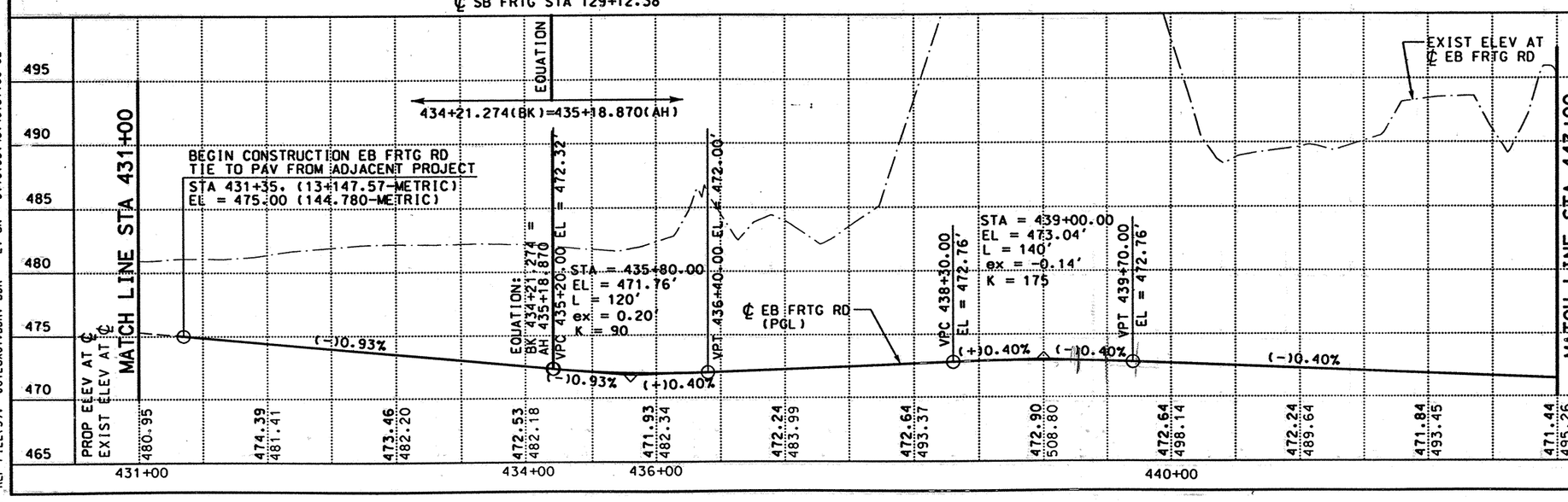

© 1999 Texas Department of Transportation

Brown & Root
HOUSTON, TEXAS

LOOP 20
EASTBOUND FRONTAGE ROAD

PLAN AND PROFILE
STA 431+00 TO STA 443+00

0 50 100
SCALE: 1"=100' HORIZ
1"=10' VERT

SHEET 2 OF 8

FED RD DIV NO.	STATE PROJECT NO		SHEET NO.
6	C86-14-23		27
STATE	STATE DIST NO	COUNTY	
TEXAS	22	WEBB	
CONT	SECT	JOB	HIGHWAY NO
0086	14	023	LOOP 20

REF FILE(S): J01LOX01.PRO, PRO LV ON = 1-63
J01LOX01.UT1, UT1 LV ON = 1-63
J01LOX01.ILL, ILL LV ON = 20
J01LOX01.FND, FND LV ON = 35
J01LOX01.DRN, DRN LV ON = 8

REF FILE(S): J01LOX01.BCK, BCK LV ON = 1-30
J01LOX01.EOP, EOP LV ON = 1-11,13-17,19-27,29-41,43-53,5
J01LOX01.EOP, ALG LV ON = 1-44
J01LOX01.BDR, BDR LV ON = 5,10,35,45,46,57,60-62

D03FEX04.DGN-11 04-02-99 BAR_HO_ES05 \HCIVIL\CF0039\PHASE2

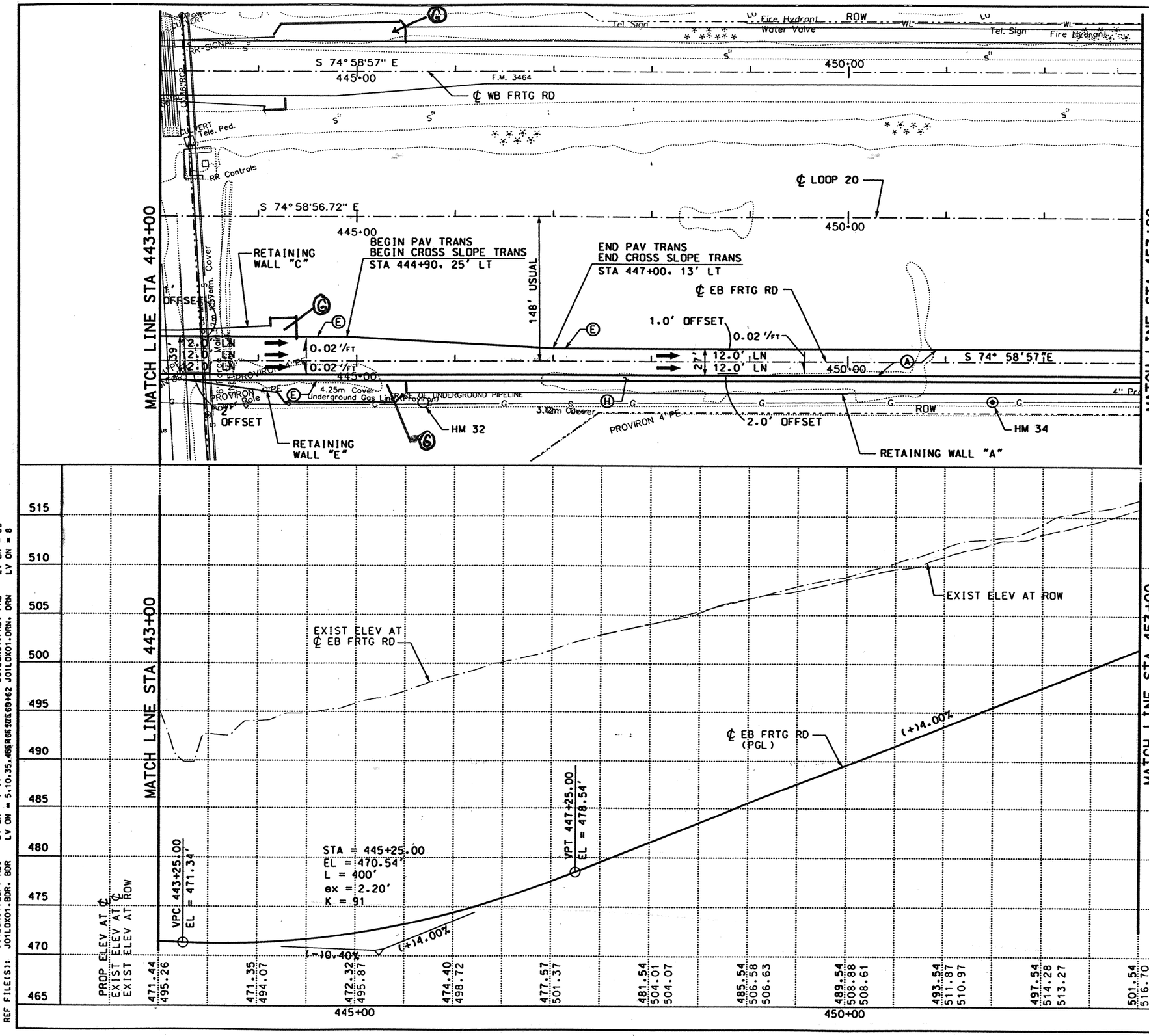

LEGEND:

- Ⓐ CONC PAV (CONT REINF HY STL)(12")
- Ⓑ ASPH CONC PAV (TY A)(4")
- Ⓒ LIME TREATED SUBGRADE (8")
- Ⓓ SINGLE SLOPE CONCRETE BARRIER (SSCB) (TYPE 2)
- Ⓔ TYPE II MONO CURB (6")
- Ⓕ CELL FIBER MULCH SEED (PERM) (RURAL)(CLAY)
- Ⓖ CLASS B RIPRAP (4")
- Ⓗ CONC SIDEWALK (4")
- Ⓘ CONC MEDIAN (6")
- Ⓙ SINGLE SLOPE TRAFFIC RAIL(SSTR) w/ DRAIN SLOTS
- Ⓚ RETAINING WALL
- Ⓛ METAL BEAM GUARD FENCE
- Ⓜ BRICK PAVERS
- Ⓝ REMOVE ASPH CONC PAV
- Ⓞ REMOVE CONC PAV
- Ⓟ TYPE II CURB AND GUTTER (6")
- Ⓠ CONCRETE DRIVEWAYS (6")
- Ⓡ ASPH CONC PAV (TY D)(2")
- Ⓢ ASPH CONC PAV (TY A)(8")
- Ⓣ PLANE ASPH CONC PAV (0 - 1")
- Ⓤ SINGLE SLOPE TRAFFIC RAIL (SSTR)
- Ⓥ CHAINLINK FENCE (6')
- Ⓦ ROADWAY UNDERDRAIN
- Ⓧ WHEELCHAIR RAMP TYPE B

NOTES:

1. SEE "GEOMETRIC DATA SUMMARY" FOR ALIGNMENT DATA.
2. SEE "LOOP 20 RETAINING WALL LAYOUT" FOR MORE DETAILS.

STATE OF TEXAS
DERRON S. VINCIK
84028
REGISTERED PROFESSIONAL ENGINEER

The seal appearing on this document was authorized by Derron S. Vincik P.E. 84028, on April 2, 1999.

Derron S. Vincik

DATE	BY	REV	REVISION

© 1999 Texas Department of Transportation

Brown & Root
HOUSTON, TEXAS

LOOP 20
EASTBOUND FRONTAGE ROAD

PLAN AND PROFILE
STA 443+00 TO STA 453+00

0 50 100
SCALE: 1"=100' HORIZ
1"=10' VERT

SHEET 3 OF 8

FED RD DIV NO	STATE PROJECT NO	SHEET NO
6	C86-14-23	272

STATE	STATE DIST NO	COUNTY
TEXAS	22	WEBB

CONT	SECT	JOB	HIGHWAY NO
0086	14	023	LOOP 20

D03FEX05.DGN-10 04-01-99 BAR_HO_ES05 \HCIVIL\CF0039\PHASE2

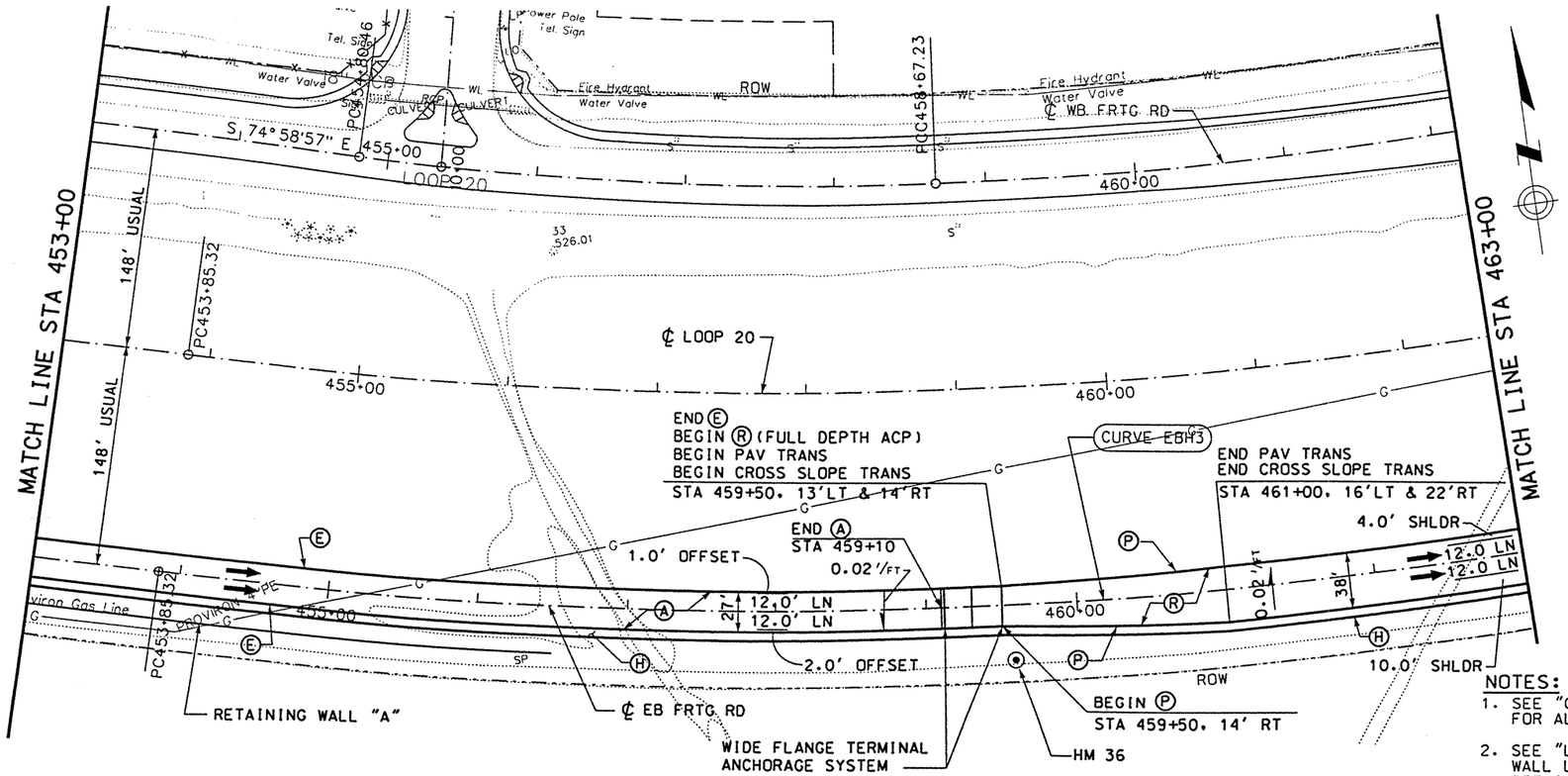

LEGEND:

- Ⓐ CONC PAV (CONT REINF HY STL)(12")
- Ⓑ ASPH CONC PAV (TY A)(4")
- Ⓒ LIME TREATED SUBGRADE (8")
- Ⓓ SINGLE SLOPE CONCRETE BARRIER (SSCB) (TYPE 2)
- Ⓔ TYPE II MONO CURB (6")
- Ⓕ CELL FIBER MULCH SEED (PERM) (RURAL)(CLAY)
- Ⓖ CLASS B RIPRAP (4")
- Ⓗ CONC SIDEWALK (4")
- Ⓘ CONC MEDIAN (6")
- Ⓙ SINGLE SLOPE TRAFFIC RAIL(SSTR) w/ DRAIN SLOTS
- Ⓚ RETAINING WALL
- Ⓛ METAL BEAM GUARD FENCE
- Ⓜ BRICK PAVERS
- Ⓝ REMOVE ASPH CONC PAV
- Ⓞ REMOVE CONC PAV
- Ⓟ TYPE II CURB AND GUTTER (6")
- Ⓠ CONCRETE DRIVEWAYS (6")
- Ⓡ ASPH CONC PAV (TY D)(2")
- Ⓢ ASPH CONC PAV (TY A)(8")
- Ⓣ PLANE ASPH CONC PAV (0 - 1")
- Ⓤ SINGLE SLOPE TRAFFIC RAIL (SSTR)
- Ⓥ CHAINLINK FENCE (6')
- Ⓦ ROADWAY UNDERDRAIN
- Ⓧ WHEELCHAIR RAMP TYPE B

NOTES:

1. SEE "GEOMETRIC DATA SUMMARY" FOR ALIGNMENT DATA.
2. SEE "LOOP 20 RETAINING WALL LAYOUT" FOR MORE DETAILS.

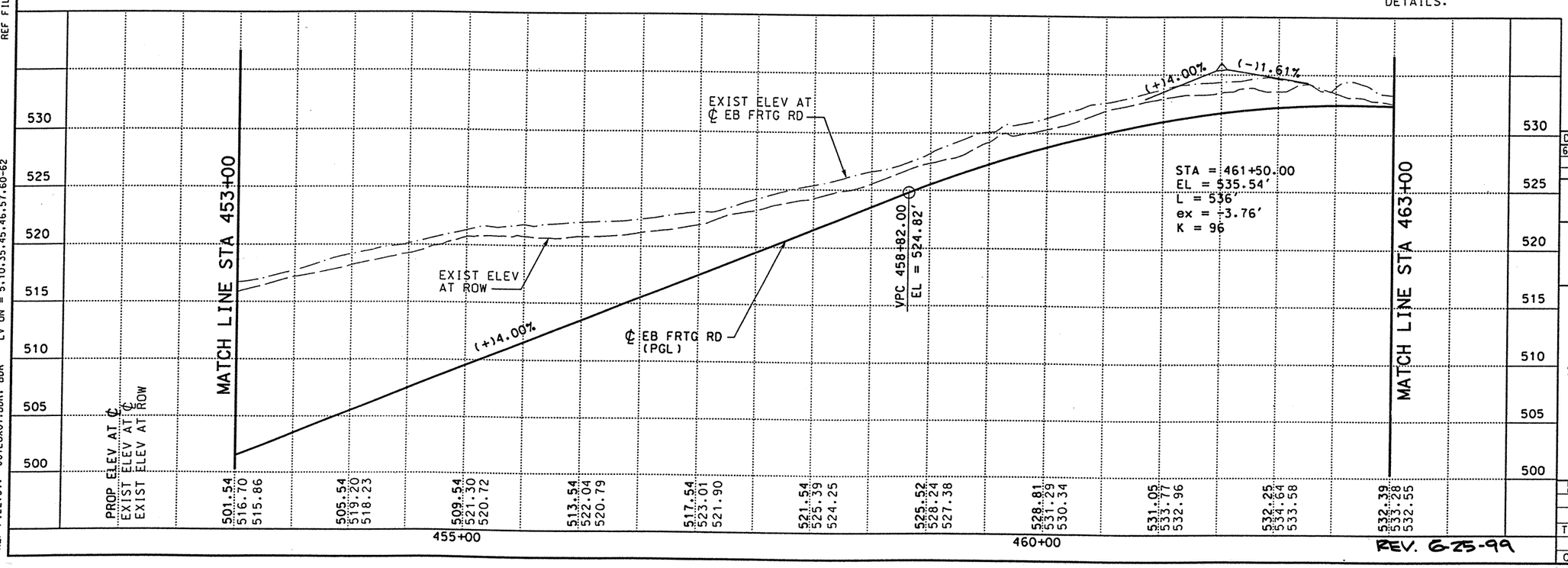

REV. 6-25-99

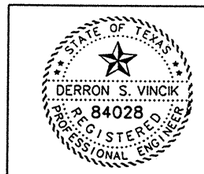

The seal appearing on this document was authorized by Derron S. Vincik P.E. 84028, on June 3, 1999.

DATE	BY	REV	REVISION
6/3/99	DV	01	WIDE FLANGE TERMINAL ANCHORAGE SYSTEM

© 1999 Texas Department of Transportation

Brown & Root
HOUSTON, TEXAS

LOOP 20
EASTBOUND FRONTAGE ROAD

PLAN AND PROFILE
STA 453+00 TO STA 463+00

0 50 100
SCALE: 1"=100' HORIZ
1"=10' VERT

SHEET 4 OF 8

FED RD DIV NO	STATE PROJECT NO		SHEET NO
6	C86-14-23		273
STATE	STATE DIST NO	COUNTY	
TEXAS	22	WEBB	
CONT	SECT	JOB	HIGHWAY NO
0086	14	023	LOOP 20

REF FILE(S): J01LOX01.PRO, PRO LV ON = 1-63
J01LOX01.UTI, UTI LV ON = 1-63
J01LOX01.ILL, ILL LV ON = 20
J01LOX01.FND, FND LV ON = 35
J01LOX01.DRN, DRN LV ON = 8

REF FILE(S): J01LOX01.BCK, BCK LV ON = 1-30
J01LOX01.EOP, EOP LV ON = 1-11,13-17,19-27,29-41,43-53,5
J01LOX01.EOP, ALG LV ON = 1-44
J01LOX01.BDR, BDR LV ON = 5,10,35,45,46,57,60-62

D03FEX06.DGN-11 05-27-99 BAR_HO_ES05 \HCIVIL\CF0039\PHASE2

SEE REVISION

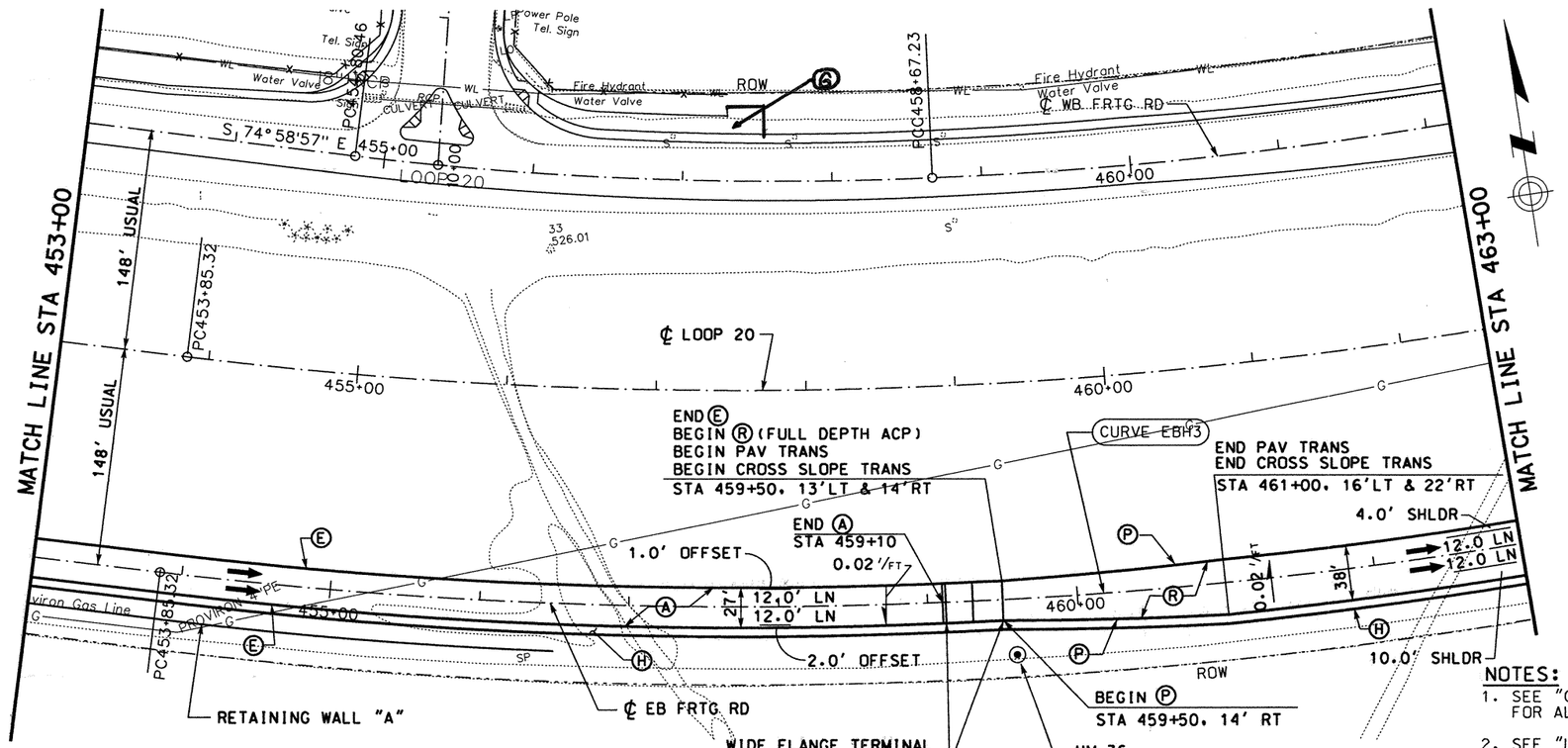

LEGEND:

- Ⓐ CONC PAV (CONT REINF HY STL)(12")
- Ⓑ ASPH CONC PAV (TY A)(4")
- Ⓒ LIME TREATED SUBGRADE (8")
- Ⓓ SINGLE SLOPE CONCRETE BARRIER (SSCB) (TYPE 2)
- Ⓔ TYPE II MONO CURB (6")
- Ⓕ CELL FIBER MULCH SEED (PERM) (RURAL)(CLAY)
- Ⓖ CLASS B RIPRAP (4")
- Ⓗ CONC SIDEWALK (4")
- Ⓘ CONC MEDIAN (6")
- Ⓙ SINGLE SLOPE TRAFFIC RAIL(SSTR) w/ DRAIN SLOTS
- Ⓚ RETAINING WALL
- Ⓛ METAL BEAM GUARD FENCE
- Ⓜ BRICK PAVERS
- Ⓝ REMOVE ASPH CONC PAV
- Ⓞ REMOVE CONC PAV
- Ⓟ TYPE II CURB AND GUTTER (6")
- Ⓠ CONCRETE DRIVEWAYS (6")
- Ⓡ ASPH CONC PAV (TY D)(2")
- Ⓢ ASPH CONC PAV (TY A)(8")
- Ⓣ PLANE ASPH CONC PAV (0 - 1")
- Ⓤ SINGLE SLOPE TRAFFIC RAIL (SSTR)
- Ⓥ CHAINLINK FENCE (6')
- Ⓦ ROADWAY UNDERDRAIN
- Ⓧ WHEELCHAIR RAMP TYPE B

NOTES:

1. SEE "GEOMETRIC DATA SUMMARY" FOR ALIGNMENT DATA.
2. SEE "LOOP 20 RETAINING WALL LAYOUT" FOR MORE DETAILS.

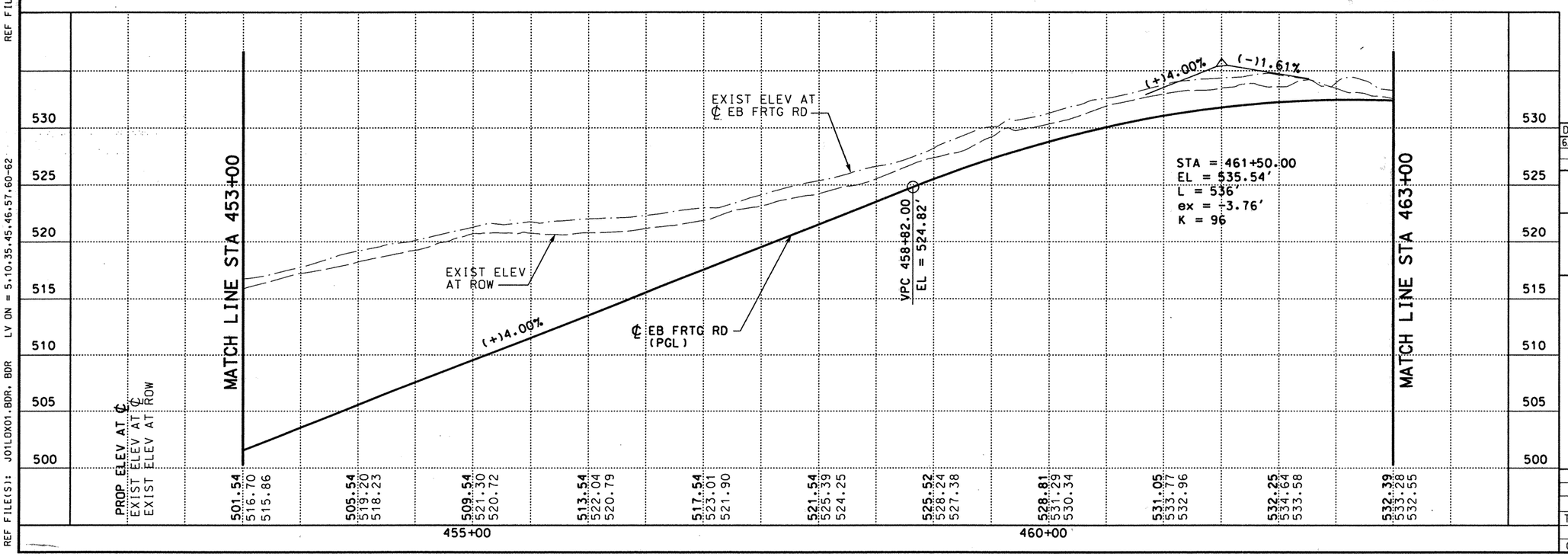

STATE OF TEXAS
DERRON S. VINCIK
84028
REGISTERED PROFESSIONAL ENGINEER

The seal appearing on this document was authorized by Derron S. Vincik P.E. 84028, on September 30, 1999.

DATE	BY	REV	REVISION
6/3/99	DV	01	WIDE FLANGE TERMINAL ANCHORAGE SYSTEM

© 1999 Texas Department of Transportation

Brown & Root
HOUSTON, TEXAS

LOOP 20
EASTBOUND FRONTAGE ROAD

PLAN AND PROFILE
STA 453+00 TO STA 463+00

0 50 100
SCALE: 1"=100' HORIZ
1"=10' VERT

SHEET 4 OF 8

FED RD DIV NO	STATE PROJECT NO	SHEET NO
6	C86-14-23	273

STATE	STATE DIST NO	COUNTY
TEXAS	22	WEBB

CONT	SECT	JOB	HIGHWAY NO
0086	14	023	LOOP 20

REF FILE(S): J01LOX01.PRO, PRO LV ON = 1-63
J01LOX01.UTI, UTI LV ON = 1-63
J01LOX01.ILL, ILL LV ON = 20
J01LOX01.FND, FND LV ON = 35
J01LOX01.DRN, DRN LV ON = 8

REF FILE(S): J01LOX01.BCK, BCK LV ON = 1-30
J01LOX01.EOP, EOP LV ON = 1-11,13-17,19-27,29-41,43-53,5
J01LOX01.EOP, ALG LV ON = 1-44
J01LOX01.BDR, BDR LV ON = 5,10,35,45,46,57,60-62

D03FEX06.DGN-11 05-27-99 BAR_HO_ES05 \HCIVIL\CF0039\PHASE2

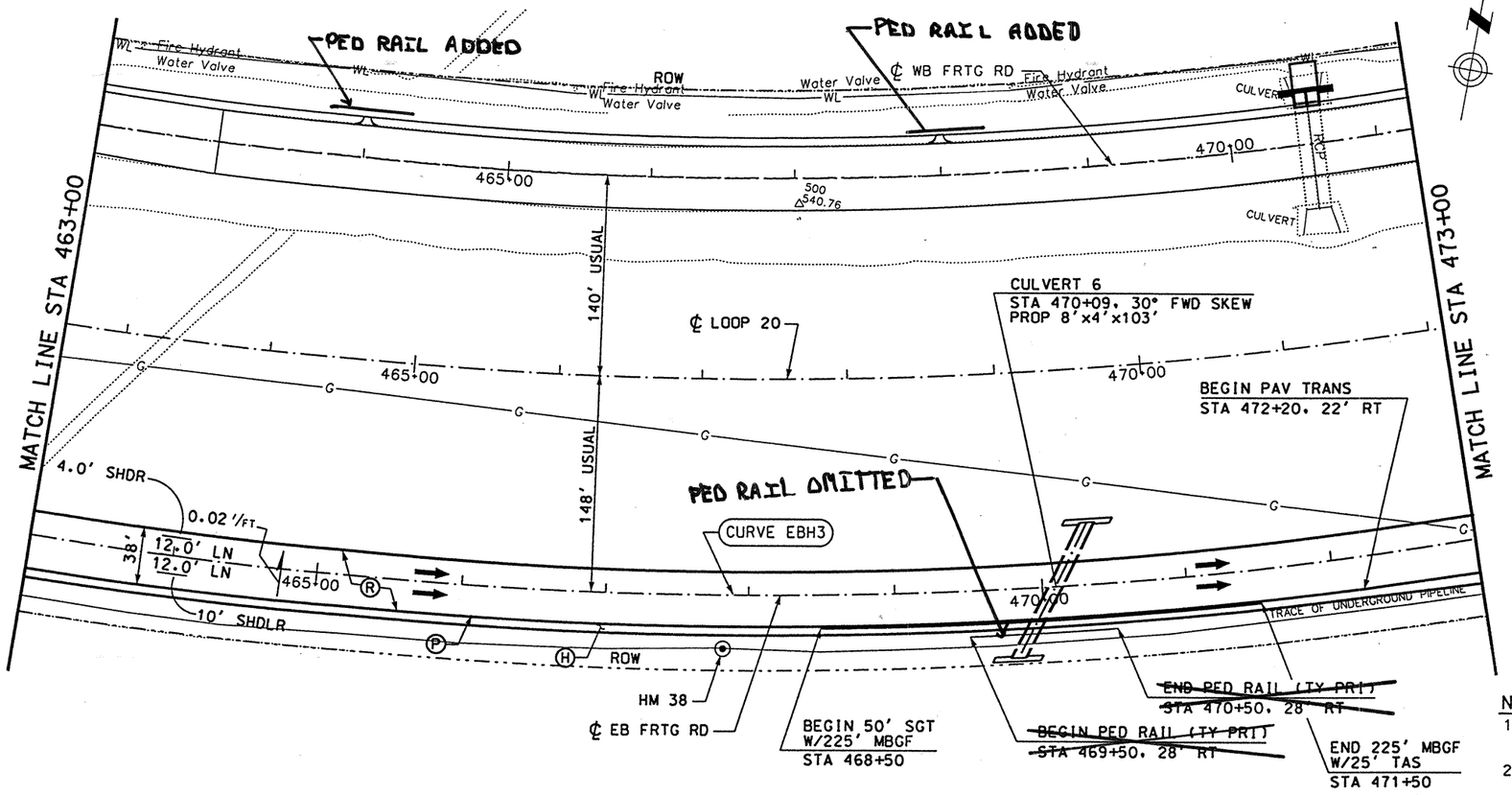

LEGEND:

- Ⓐ CONC PAV (CONT REINF HY STL)(12")
- Ⓑ ASPH CONC PAV (TY A)(4")
- Ⓒ LIME TREATED SUBGRADE (8")
- Ⓓ SINGLE SLOPE CONCRETE BARRIER (SSCB) (TYPE 2)
- Ⓔ TYPE II MONO CURB (6")
- Ⓕ CELL FIBER MULCH SEED (PERM) (RURAL)(CLAY)
- Ⓖ CLASS B RIPRAP (4")
- Ⓗ CONC SIDEWALK (4")
- Ⓘ CONC MEDIAN (6")
- Ⓙ SINGLE SLOPE TRAFFIC RAIL(SSTR) w/ DRAIN SLOTS
- Ⓚ RETAINING WALL
- Ⓛ METAL BEAM GUARD FENCE
- Ⓜ BRICK PAVERS
- Ⓝ REMOVE ASPH CONC PAV
- Ⓞ REMOVE CONC PAV
- Ⓟ TYPE II CURB AND GUTTER (6")
- Ⓠ CONCRETE DRIVEWAYS (6")
- Ⓡ ASPH CONC PAV (TY D)(2")
- Ⓢ ASPH CONC PAV (TY A)(8")
- Ⓣ PLANE ASPH CONC PAV (0 - 1")
- Ⓤ SINGLE SLOPE TRAFFIC RAIL (SSTR)
- Ⓥ CHAINLINK FENCE (6')
- Ⓦ ROADWAY UNDERDRAIN
- Ⓧ WHEELCHAIR RAMP TYPE B

NOTES:

1. SEE "GEOMETRIC DATA SUMMARY" FOR ALIGNMENT DATA.
2. SEE CULVERT LAYOUT FOR MORE DETAILS.

STATE OF TEXAS
DERRON S. VINCIK
84028
REGISTERED PROFESSIONAL ENGINEER

The seal appearing on this document was authorized by Derron S. Vincik P.E. 84028, on June 3, 1999.

Derron S. Vincik

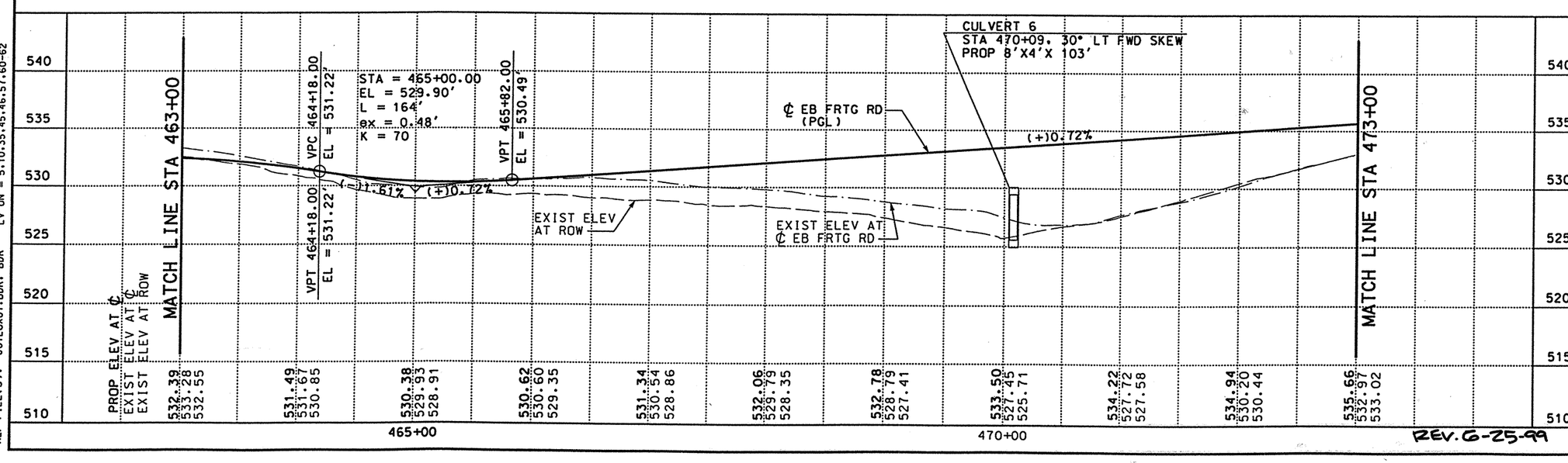

REV. 6-25-99

DATE	BY	REV	REVISION
6/03/99	DV	01	MBGF

© 1999 Texas Department of Transportation

Brown & Root
HOUSTON, TEXAS

LOOP 20
EASTBOUND FRONTAGE ROAD

PLAN AND PROFILE
STA 463+00 TO STA 473+00

0 50 100
SCALE: 1"=100' HORIZ
1"=10' VERT

SHEET 5 OF 8

FED RD DIV NO	STATE PROJECT NO	SHEET NO
6	C86-14-23	274

STATE	STATE DIST NO	COUNTY
TEXAS	22	WEBB

CONT	SECT	JOB	HIGHWAY NO
0086	14	023	LOOP 20

REF FILE(S): J01LOX01.PRO, PRO LV ON = 1-63
J01LOX01.UTI, UTI LV ON = 1-63
J01LOX01.ILL, ILL LV ON = 20
J01LOX01.FND, FND LV ON = 35
J01LOX01.DRN, DRN LV ON = 8

REF FILE(S): J01LOX01.BCK, BCK LV ON = 1-30
J01LOX01.EOP, EOP LV ON = 1-11,13-17,19-27,[illegible]41,43-53,5
J01LOX01.EOP, ALG LV ON = 1-44
J01LOX01.BDR, BDR LV ON = 5,10,35,45,46,57,60-62

D03FEX07.DGN-15 06-07-99 BAR_HO_ES05 \HCIVIL\CF0039\PHASE2

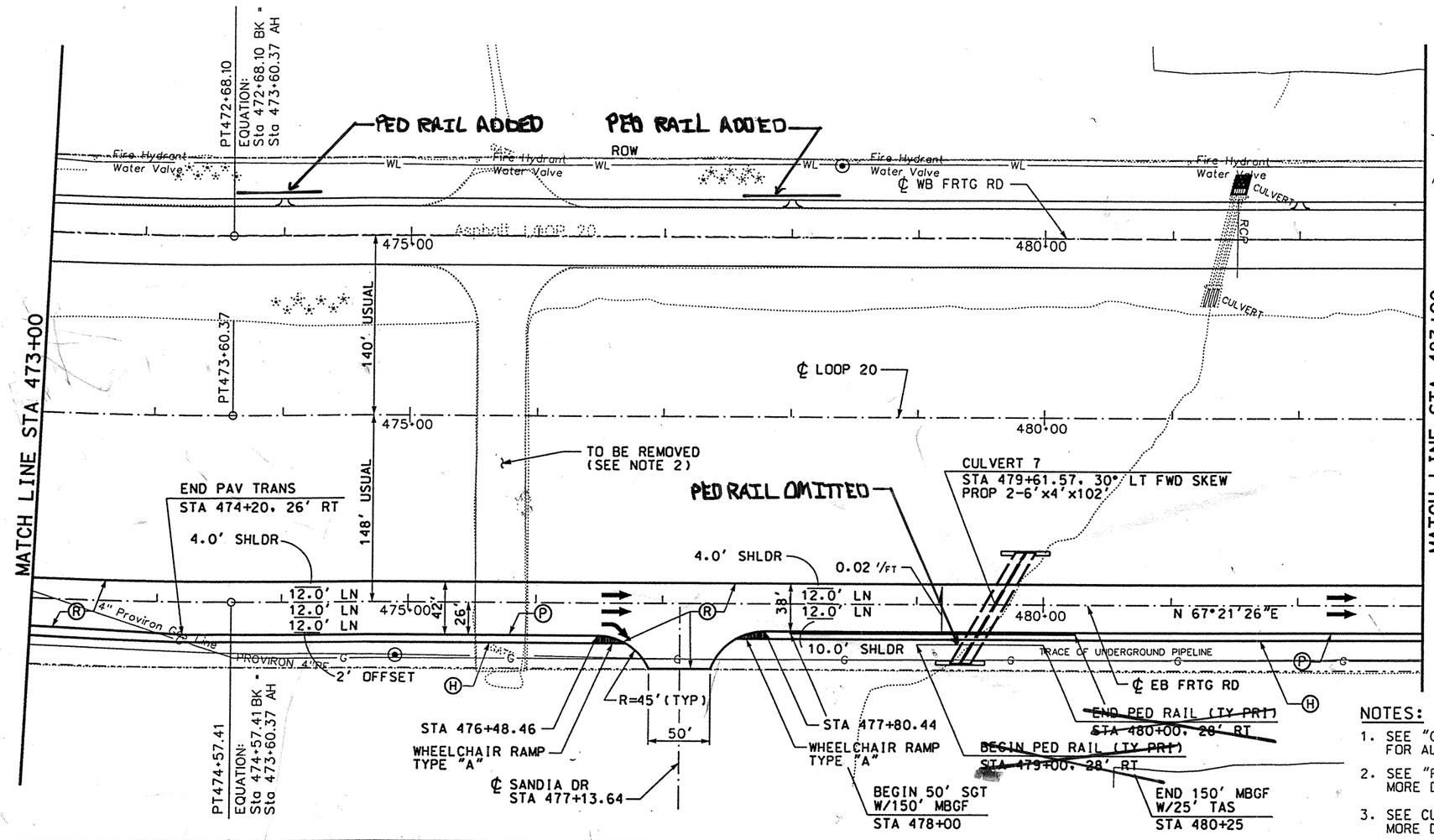

LEGEND:

- Ⓐ CONC PAV (CONT REINF HY STL)(12")
- Ⓑ ASPH CONC PAV (TY A)(4")
- Ⓒ LIME TREATED SUBGRADE (8")
- Ⓓ SINGLE SLOPE CONCRETE BARRIER (SSCB) (TYPE 2)
- Ⓔ TYPE II MONO CURB (6")
- Ⓕ CELL FIBER MULCH SEED (PERM) (RURAL)(CLAY)
- Ⓖ CLASS B RIPRAP (4")
- Ⓗ CONC SIDEWALK (4")
- Ⓘ CONC MEDIAN (6")
- Ⓙ SINGLE SLOPE TRAFFIC RAIL(SSTR) w/ DRAIN SLOTS
- Ⓚ RETAINING WALL
- Ⓛ METAL BEAM GUARD FENCE
- Ⓜ BRICK PAVERS
- Ⓝ REMOVE ASPH CONC PAV
- Ⓞ REMOVE CONC PAV
- Ⓟ TYPE II CURB AND GUTTER (6")
- Ⓠ CONCRETE DRIVEWAYS (6")
- Ⓡ ASPH CONC PAV (TY D)(2")
- Ⓢ ASPH CONC PAV (TY A)(8")
- Ⓣ PLANE ASPH CONC PAV (0 - 1")
- Ⓤ SINGLE SLOPE TRAFFIC RAIL (SSTR)
- Ⓥ CHAINLINK FENCE (6')
- Ⓦ ROADWAY UNDERDRAIN
- Ⓧ WHEELCHAIR RAMP TYPE B

NOTES:

1. SEE "GEOMETRIC DATA SUMMARY" FOR ALIGNMENT DATA.
2. SEE "REMOVAL LAYOUT" FOR MORE DETAILS.
3. SEE CULVERT LAYOUT FOR MORE DETAILS.

STATE OF TEXAS
DERRON S. VINCIK
84028
REGISTERED PROFESSIONAL ENGINEER

The seal appearing on this document was authorized by Derron S. Vincik P.E. 84028, on June 3, 1999.

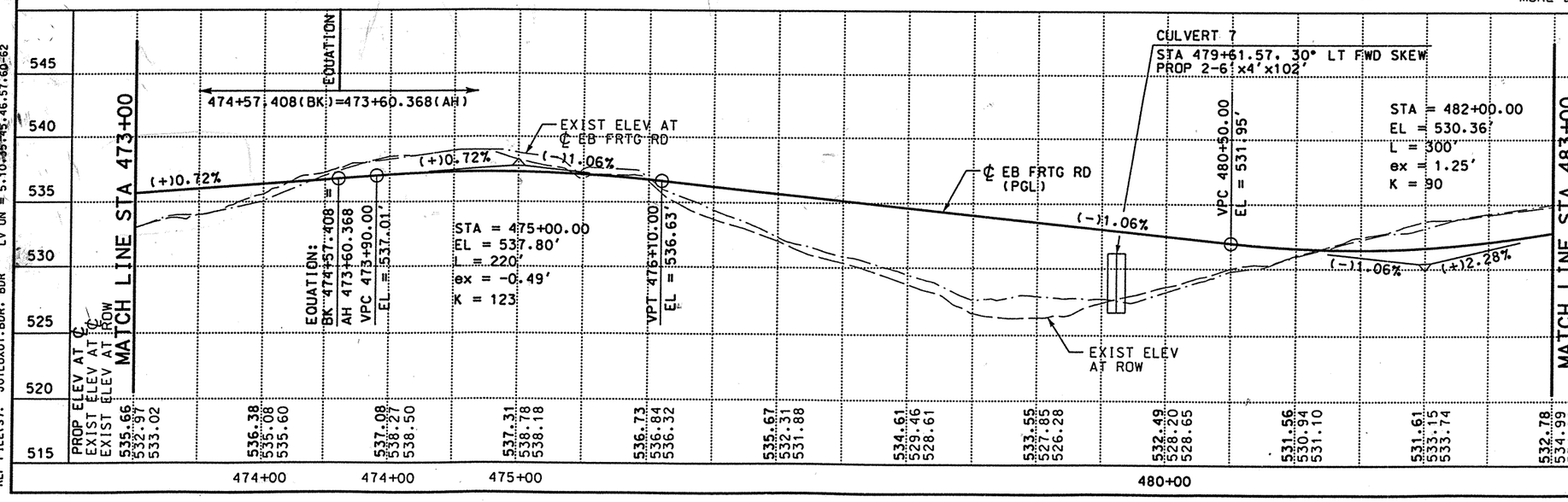

REV. 6-25-99

DATE	BY	REV	REVISION
6/03/99	DV	01	MBGF

© 1999

Texas Department of Transportation

Brown & Root
HOUSTON, TEXAS

LOOP 20
EASTBOUND FRONTAGE ROAD

PLAN AND PROFILE
STA 473+00 TO STA 483+00

0 50 100
SCALE: 1"=100' HORIZ
1"=10' VERT

SHEET 6 OF 8

FED RD DIV NO	STATE PROJECT NO	SHEET NO
6	C86-14-23	275

STATE	STATE DIST NO	COUNTY
TEXAS	22	WEBB

CONT	SECT	JOB	HIGHWAY NO
0086	14	023	LOOP 20

REF FILE(S): J01LOX01.PRO, PRD LV ON = 1-63
J01LOX01.UTI, UTI LV ON = 1-63
J01LOX01.ILL, ILL LV ON = 20
J01LOX01.FND, FND LV ON = 35
J01LOX01.DRN, DRN LV ON = 8

REF FILE(S): J01LOX01.BCK, BCK LV ON = 1-30
J01LOX01.EOP, EOP LV ON = 1-11,13-17,19-2[illegible],43-53,5
J01LOX01.EOP, ALG LV ON = 1-44
J01LOX01.BDR, BDR LV ON = 5,10-35,45,46,57,60-62

D03FEX08.DGN-12 06-07-99 BAR_HO_ES05 \HCIVIL\CF0039\PHASE2

PART 2 OF 4

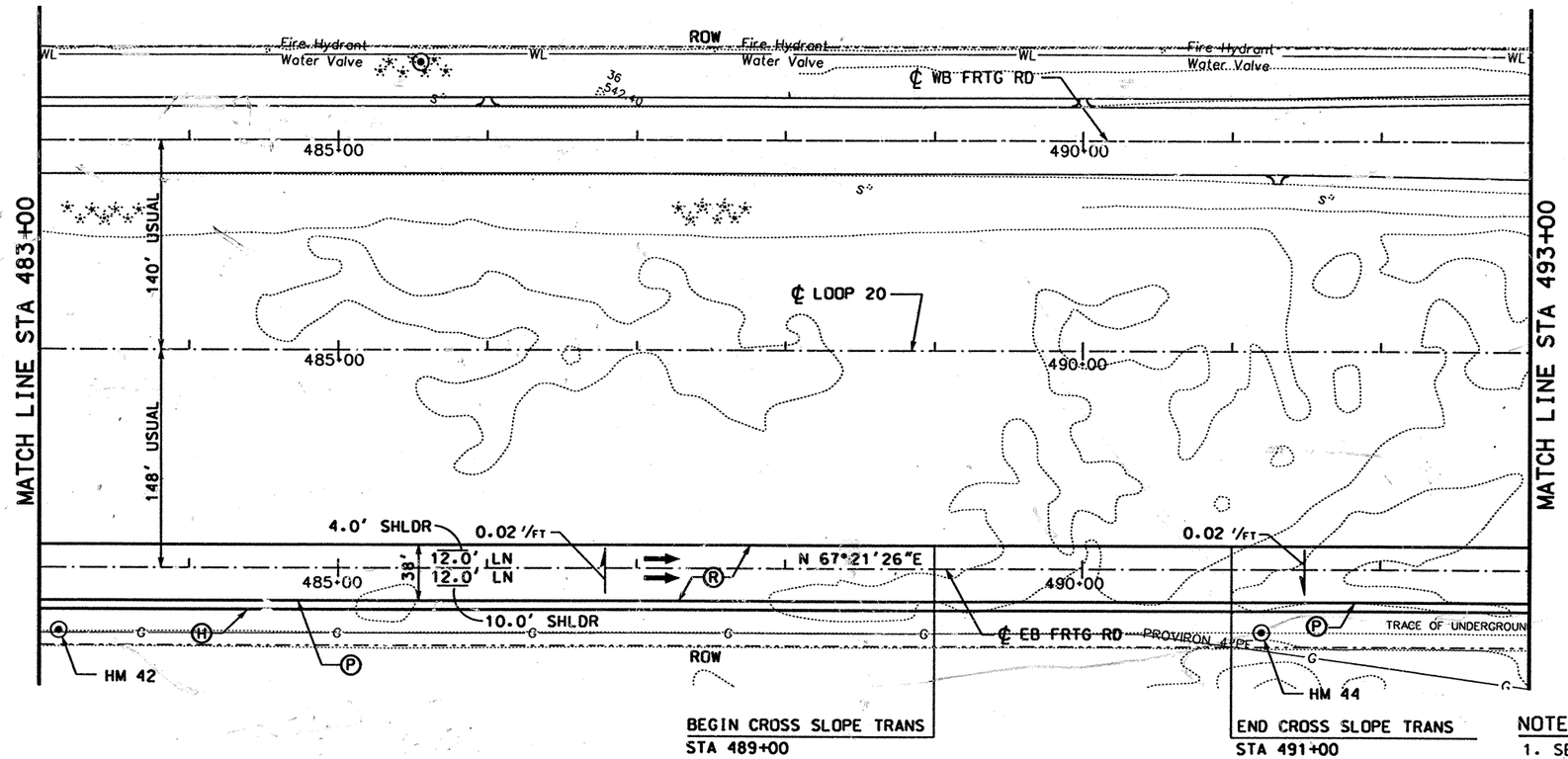

LEGEND:

- Ⓐ CONC PAV (CONT REINF HY STL)(12")
- Ⓑ ASPH CONC PAV (TY A)(4")
- Ⓒ LIME TREATED SUBGRADE (8")
- Ⓓ SINGLE SLOPE CONCRETE BARRIER (SSCB) (TYPE 2)
- Ⓔ TYPE II MONO CURB (6")
- Ⓕ CELL FIBER MULCH SEED (PERM) (RURAL)(CLAY)
- Ⓖ CLASS B RIPRAP (4")
- Ⓗ CONC SIDEWALK (4")
- Ⓘ CONC MEDIAN (6")
- Ⓙ SINGLE SLOPE TRAFFIC RAIL(SSTR) w/ DRAIN SLOTS
- Ⓚ RETAINING WALL
- Ⓛ METAL BEAM GUARD FENCE
- Ⓜ BRICK PAVERS
- Ⓝ REMOVE ASPH CONC PAV
- Ⓞ REMOVE CONC PAV
- Ⓟ TYPE II CURB AND GUTTER (6")
- Ⓠ CONCRETE DRIVEWAYS (6")
- Ⓡ ASPH CONC PAV (TY D)(2")
- Ⓢ ASPH CONC PAV (TY A)(8")
- Ⓣ PLANE ASPH CONC PAV (0 - 1")
- Ⓤ SINGLE SLOPE TRAFFIC RAIL (SSTR)
- Ⓥ CHAINLINK FENCE (6')
- Ⓦ ROADWAY UNDERDRAIN
- Ⓧ WHEELCHAIR RAMP TYPE B

NOTES:

1. SEE "GEOMETRIC DATA SUMMARY" FOR ALIGNMENT DATA.

STATE OF TEXAS
DERRON S. VINCIK
84028
REGISTERED PROFESSIONAL ENGINEER

The seal appearing on this document was authorized by Derron S. Vincik P.E. 84028, on April 2, 1999.

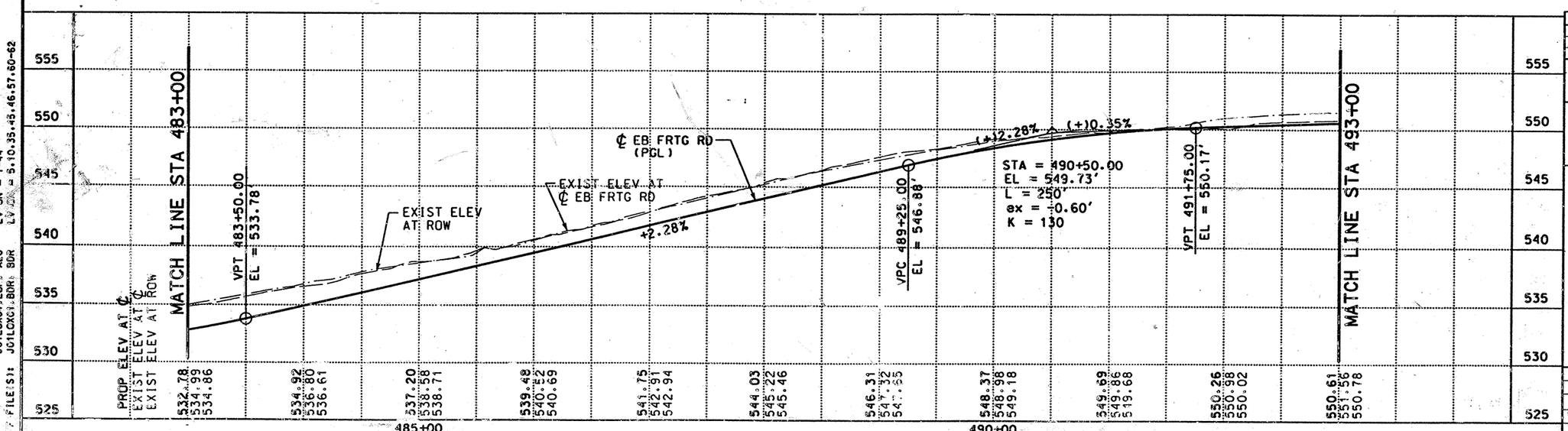

DATE	BY	REV	REVISION

© 1999

Texas Department of Transportation

Brown & Root
HOUSTON, TEXAS

LOOP 20
EASTBOUND FRONTAGE ROAD

PLAN AND PROFILE
STA 483+00 TO STA 493+00

0 50 100
SCALE: 1"=100' HORIZ
1"=10' VERT

SHEET 7 OF 8

FED RD DIV NO	STATE PROJECT NO	SHEET NO
6	C36-14-23	276

STATE	STATE DIST NO	COUNTY
TEXAS	22	WEBB

CONT	SECT	JOB	HIGHWAY NO
0086	14	023	LOOP 20

003FEX09.DGN-09 04-01-99 B:\R_HO_ES05 \HCIVIL\CF0039\PHASE2

REF FILE(S): J01LOX01.PRO, J01LOX01.UTI, J01LOX01.ILL, J01LOX01.FND, J01LOX01.DRN, J01LOX01.BCX, J01LOX01.EOP, J01LOX01.BDR, J01LOX01.SDR

LV ON = 1-63
LV ON = 1-63
LV ON = 20
LV ON = 35
LV ON = 8
LV ON = 1-30
LV ON = 1-44
LV ON = 5,10,35,45,46,57,60-62

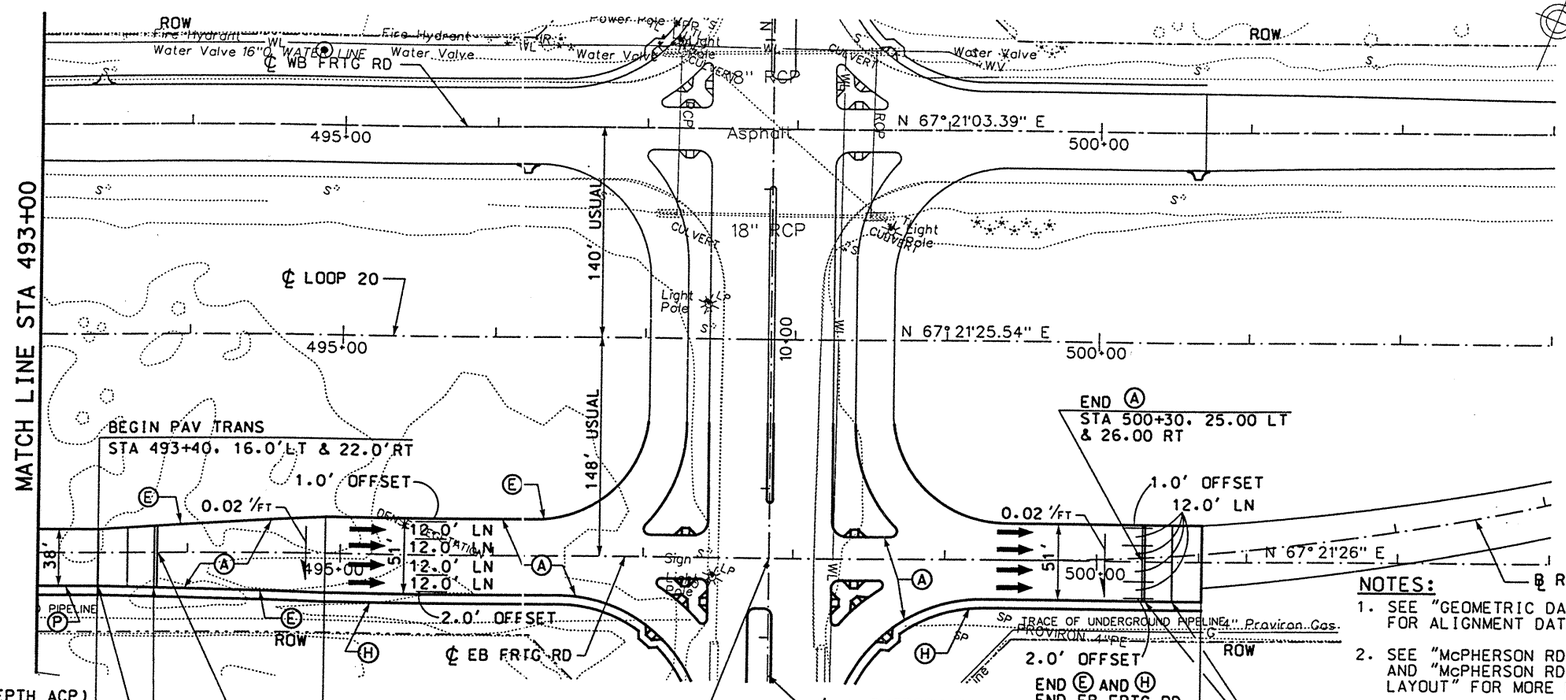

LEGEND:

- Ⓐ CONC PAV (CONT REINF HY STL)(12")
- Ⓑ ASPH CONC PAV (TY A)(4")
- Ⓒ LIME TREATED SUBGRADE (8")
- Ⓓ SINGLE SLOPE CONCRETE BARRIER (SSCB) (TYPE 2)
- Ⓔ TYPE II MONO CURB (6")
- Ⓕ CELL FIBER MULCH SEED (PERM) (RURAL)(CLAY)
- Ⓖ CLASS B RIPRAP (4")
- Ⓗ CONC SIDEWALK (4")
- Ⓘ CONC MEDIAN (6")
- Ⓙ SINGLE SLOPE TRAFFIC RAIL(SSTR) w/ DRAIN SLOTS
- Ⓚ RETAINING WALL
- Ⓛ METAL BEAM GUARD FENCE
- Ⓜ BRICK PAVERS
- Ⓝ REMOVE ASPH CONC PAV
- Ⓞ REMOVE CONC PAV
- Ⓟ TYPE II CURB AND GUTTER (6")
- Ⓠ CONCRETE DRIVEWAYS (6")
- Ⓡ ASPH CONC PAV (TY D)(2")
- Ⓢ ASPH CONC PAV (TY A)(8")
- Ⓣ PLANE ASPH CONC PAV (0 - 1")
- Ⓤ SINGLE SLOPE TRAFFIC RAIL (SSTR)
- Ⓥ CHAINLINK FENCE (6')
- Ⓦ ROADWAY UNDERDRAIN
- Ⓧ WHEELCHAIR RAMP TYPE B

NOTES:

1. SEE "GEOMETRIC DATA SUMMARY" FOR ALIGNMENT DATA.
2. SEE "McPHERSON RD PLAN AND PROFILE" AND "McPHERSON RD INTERSECTION LAYOUT" FOR MORE DETAILS.
3. SEE "RAMP "H" PLAN AND PROFILE" FOR MORE DETAILS.
4. SEE "McPHERSON RD CONTOUR GRADING PLAN" FOR CROSS SLOPES AND ELEVATIONS WITHIN THE INTERSECTION.
5. SEE "REMOVAL LAYOUT" FOR MORE DETAILS.

STATE OF TEXAS
DERRON S. VINCIK
84028
REGISTERED PROFESSIONAL ENGINEER

The seal appearing on this document was authorized by Derron S. Vincik P.E. 84028, on June 3, 1999.

Derron S. Vincik

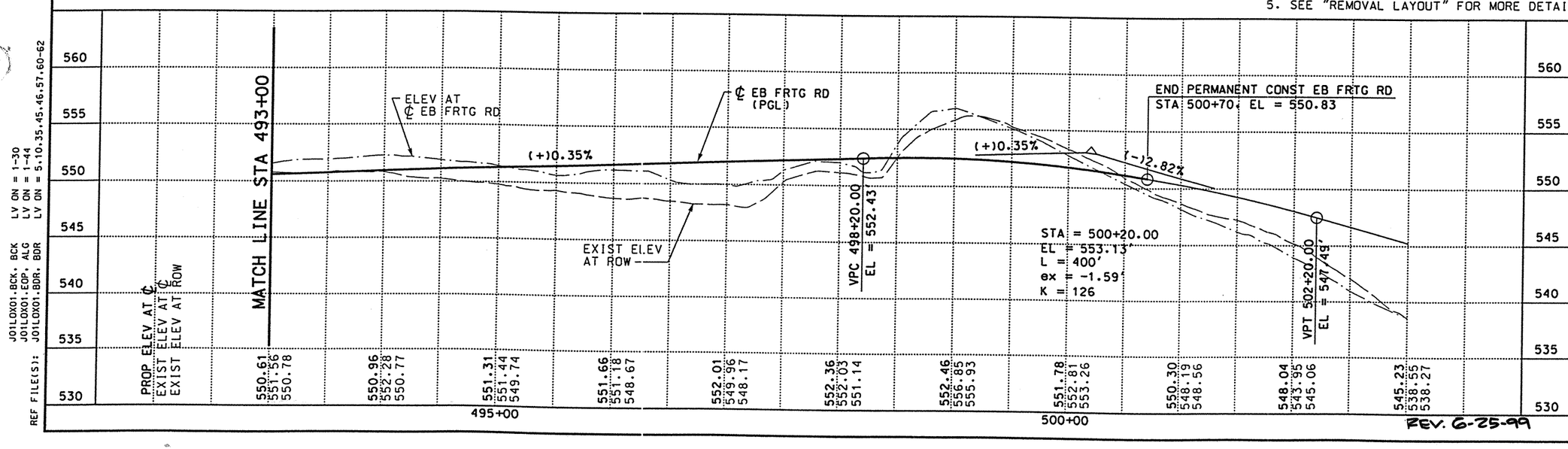

REV. 6-25-99

DATE	BY	REV	REVISION
6/3/99	DV	01	WIDE FLANGE TERMINAL ANCHORAGE SYSTEM

© 1999 Texas Department of Transportation

Brown & Root
HOUSTON, TEXAS

LOOP 20
EASTBOUND FRONTAGE ROAD

PLAN AND PROFILE
STA 493+00 TO END

0 50 100
SCALE: 1"=100' HORIZ
1"=10' VERT

SHEET 8 OF 8

FED RD DIV NO	STATE PROJECT NO	SHEET NO
6	C86-14-23	277

STATE	STATE DIST NO	COUNTY
TEXAS	22	WEBB

CONT	SECT	JOB	HIGHWAY NO
0086	14	023	LOOP 20

REF FILE(S): J01LOX01.PRO, PRD LV ON = 1-63
J01LOX01.UTI, UTI LV ON = 1-63
J01LOX01.ILL, ILL LV ON = 20
J01LOX01.FND, FND LV ON = 35
J01LOX01.DRN, DRN LV ON = 8

REF FILE(S): J01LOX01.BCK, BCK LV ON = 1-30
J01LOX01.EOP, ALG LV ON = 1-44
J01LOX01.BDR, BDR LV ON = 5,10,35,45,46,57,60-62

D03FEX10.DGN-11 05-27-99 BAR_HO_ES05 \HCIVIL\CF0039\PHASE2

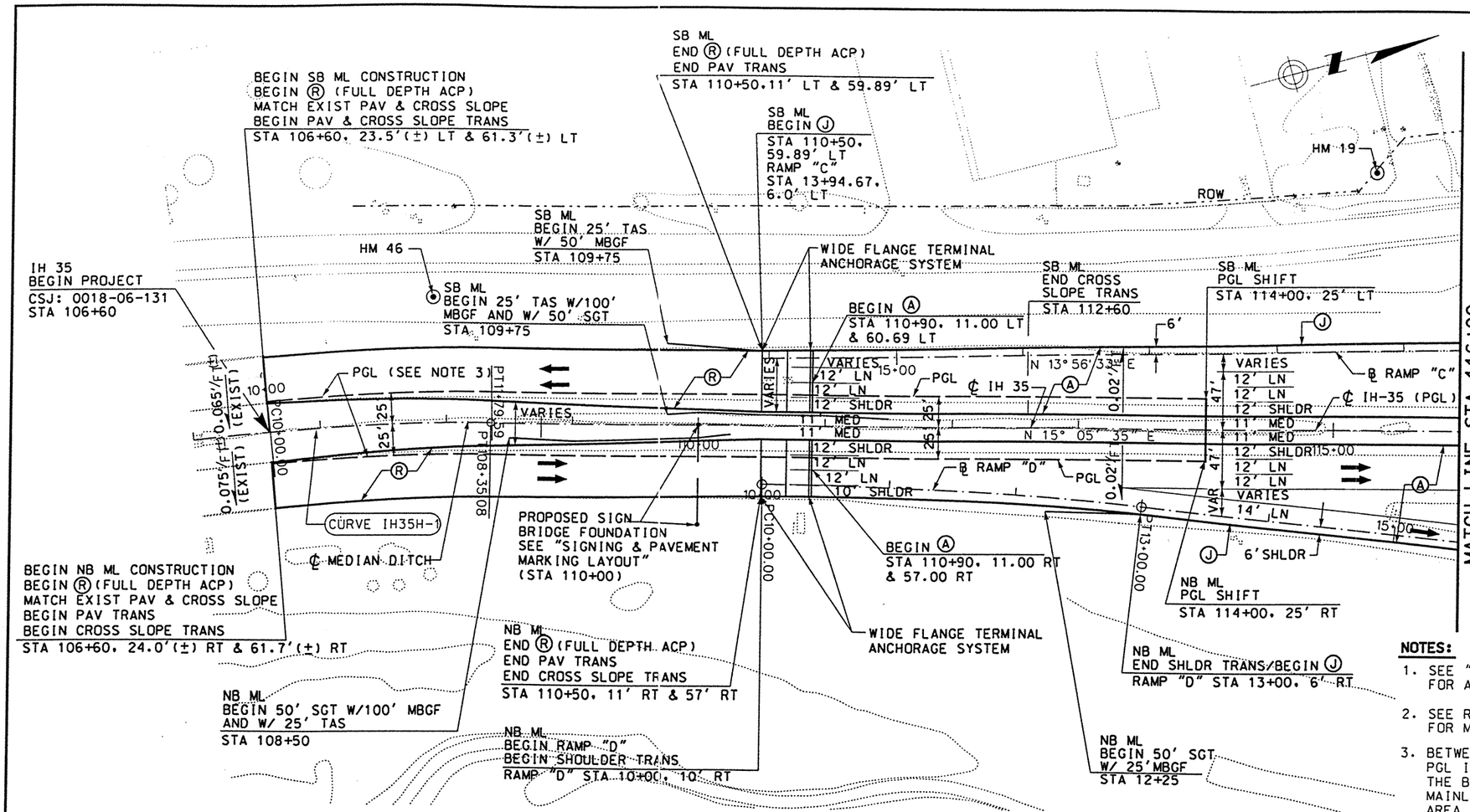

LEGEND:

- Ⓐ CONC PAV (CONT REINF HY STL)(12")
- Ⓑ ASPH CONC PAV (TY A)(4")
- Ⓒ LIME TREATED SUBGRADE (8")
- Ⓓ SINGLE SLOPE CONCRETE BARRIER (SSCB) (TYPE 2)
- Ⓔ TYPE II MONO CURB (6")
- Ⓕ CELL FIBER MULCH SEED (PERM) (RURAL)(CLAY)
- Ⓖ CLASS B RIPRAP (4")
- Ⓗ CONC SIDEWALK (4")
- Ⓘ CONC MEDIAN (6")
- Ⓙ SINGLE SLOPE TRAFFIC RAIL(SSTR) w/ DRAIN SLOTS
- Ⓚ RETAINING WALL
- Ⓛ METAL BEAM GUARD FENCE
- Ⓜ BRICK PAVERS
- Ⓝ REMOVE ASPH CONC PAV
- Ⓞ REMOVE CONC PAV
- Ⓟ TYPE II CURB AND GUTTER (6")
- Ⓠ CONCRETE DRIVEWAYS (6")
- Ⓡ ASPH CONC PAV (TY D)(2")
- Ⓢ ASPH CONC PAV (TY A)(8")
- Ⓣ PLANE ASPH CONC PAV (0 - 1")
- Ⓤ SINGLE SLOPE TRAFFIC RAIL (SSTR)
- Ⓥ CHAINLINK FENCE (6')
- Ⓦ ROADWAY UNDERDRAIN
- Ⓧ WHEELCHAIR RAMP TYPE B

NOTES:

1. SEE "GEOMETRIC DATA SUMMARY" FOR ALIGNMENT DATA.
2. SEE RAMPS "C & D" PLAN & PROFILE FOR MORE DETAILS.
3. BETWEEN STA 106+60 AND 114+00 THE PGL IS SHIFTED 25' PARALLEL FROM THE BASELINE FOR BOTH THE NB & SB MAINLANES. SUPERELEVATION IN THIS AREA IS ROTATED ABOUT THE PGL.
4. SEE "REMOVAL LAYOUT" FOR MORE DETAILS.

STATE OF TEXAS
DERRON S. VINCIK
84028
REGISTERED PROFESSIONAL ENGINEER

The seal appearing on this document was authorized by Derron S. Vincik P.E. 84028, on June 3, 1999.

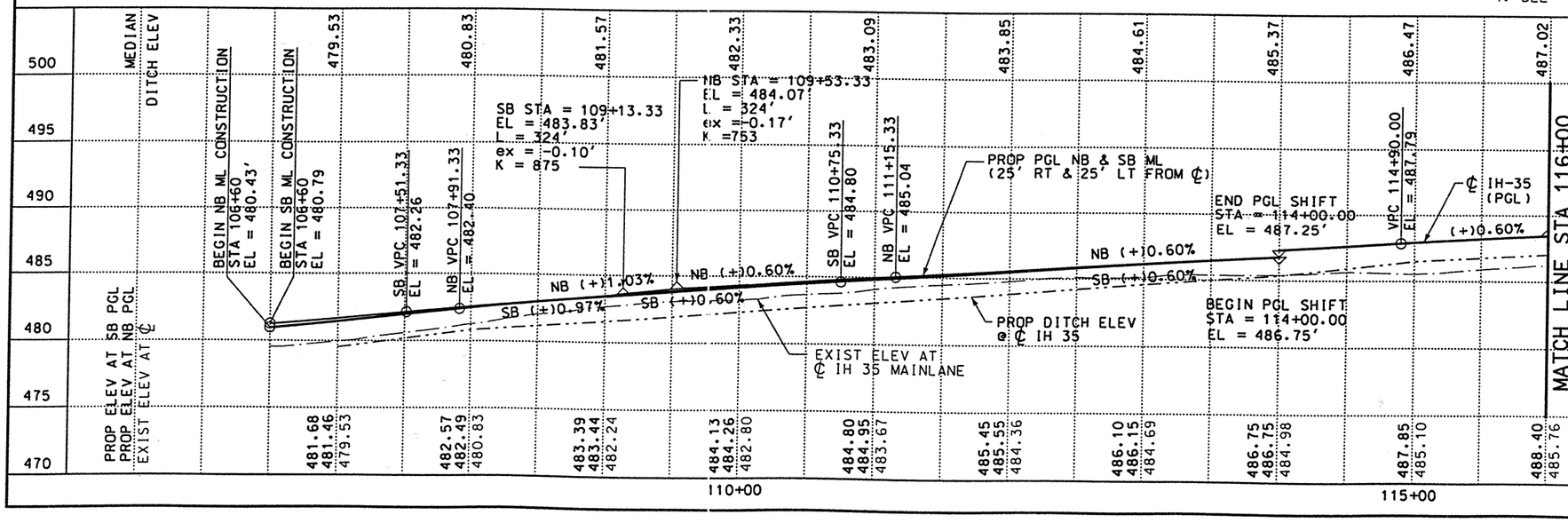

REV. 6-25-99

DATE	BY	REV	REVISION
6/3/99	DV	01	WIDE FLANGE TERMINAL ANCHORAGE SYSTEM

© 1999 Texas Department of Transportation

Brown & Root
HOUSTON, TEXAS

IH 35
MAINLANES

PLAN AND PROFILE
STA 106+00 TO STA 116+00

0 50 100
SCALE: 1"=100' HORIZ
1"=10' VERT

SHEET 1 OF 7

FED RD DIV NO	STATE PROJECT NO	SHEET NO
6	NH-99(462)	278

STATE	STATE DIST NO	COUNTY
TEXAS	22	WEBB

CONT	SECT	JOB	HIGHWAY NO
0018	06	131	IH 35

J01LOX01.PRO, PRO LV ON = 1-63
J01LOX01.UTI, UTI LV ON = 1-63
J01LOX01.ILL, ILL LV ON = 20
J01LOX01.FND, FND LV ON = 35

J01LOX01.BCK, BCK LV ON = 1-30
J01LOX01.EOP, EOP LV ON = 1-11,13-17,19-27,29-41,43-53,5
J01LOX01.EOP, ALG LV ON = 1-44

06-02-99 BAR_HO_ES05 \HGIVIL\CF0039\PHASE2
DO3MXO3.DGN-15

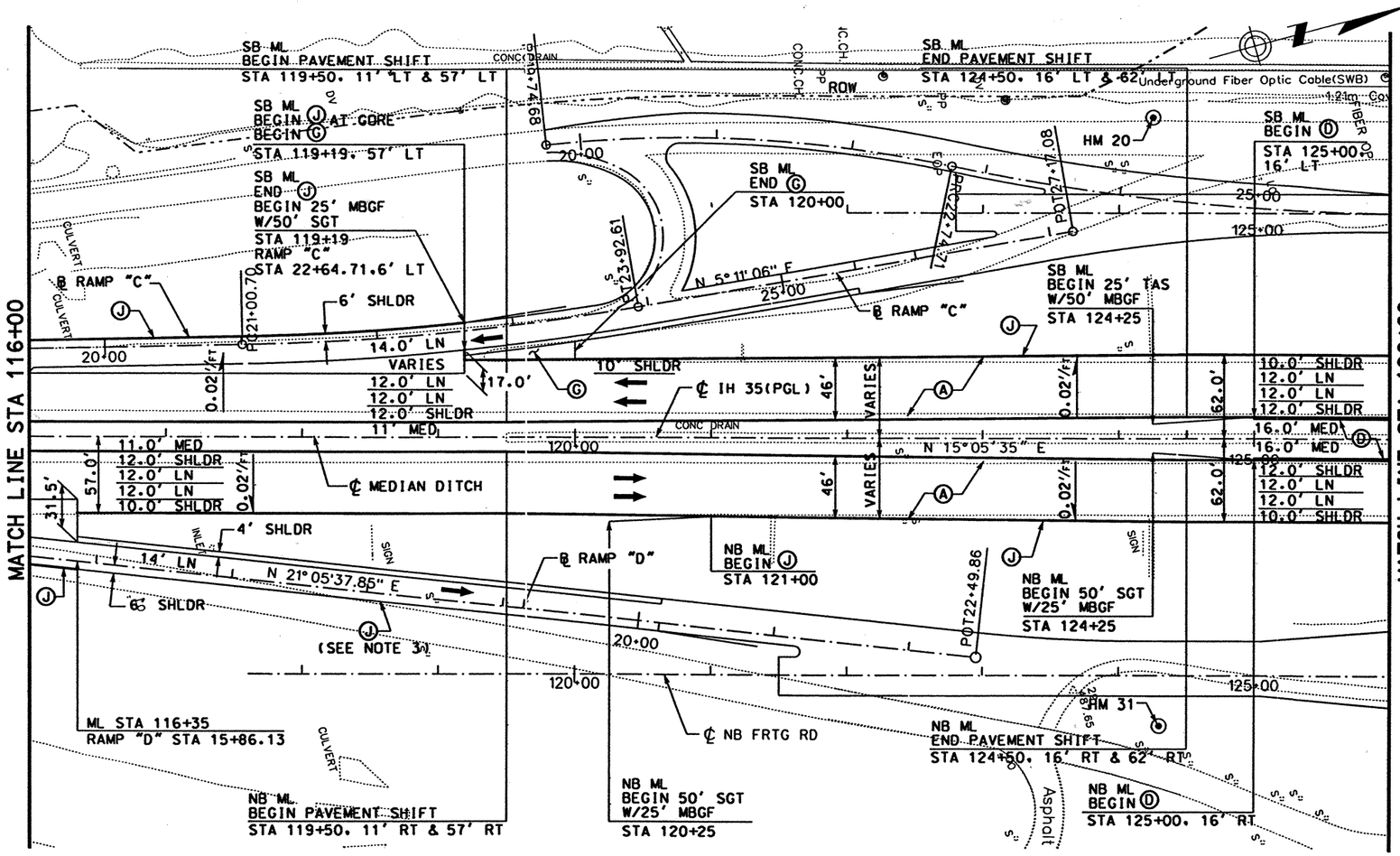

LEGEND:

- Ⓐ CONC PAV (CONT REINF HY STL)(12")
- Ⓑ ASPH CONC PAV (TY A)(4")
- Ⓒ LIME TREATED SUBGRADE (8")
- Ⓓ SINGLE SLOPE CONCRETE BARRIER (SSCB) (TYPE 2)
- Ⓔ TYPE II MONO CURB (6")
- Ⓕ CELL FIBER MULCH SEED (PERM) (RURAL)(CLAY)
- Ⓖ CLASS B RIPRAP (4")
- Ⓗ CONC SIDEWALK (4")
- Ⓘ CONC MEDIAN (6")
- Ⓙ SINGLE SLOPE TRAFFIC RAIL(SSTR) w/ DRAIN SLOTS
- Ⓚ RETAINING WALL
- Ⓛ METAL BEAM GUARD FENCE
- Ⓜ BRICK PAVERS
- Ⓝ REMOVE ASPH CONC PAV
- Ⓞ REMOVE CONC PAV
- Ⓟ TYPE II CURB AND GUTTER (6")
- Ⓠ CONCRETE DRIVEWAYS (6")
- Ⓡ ASPH CONC PAV (TY D)(2")
- Ⓢ ASPH CONC PAV (TY A)(8")
- Ⓣ PLANE ASPH CONC PAV (0 - 1")
- Ⓤ SINGLE SLOPE TRAFFIC RAIL (SSTR)
- Ⓥ CHAINLINK FENCE (6')
- Ⓦ ROADWAY UNDERDRAIN
- Ⓧ WHEELCHAIR RAMP TYPE B

NOTES:

1. SEE "GEOMETRIC DATA SUMMARY" FOR ALIGNMENT DATA.
2. SEE "RAMP "C" PLAN & PROFILE" FOR MORE DETAILS.
3. SEE "RAMP "D" PLAN & PROFILE" FOR MORE DETAILS.
4. PAY ITEM Ⓓ SHALL BE CONSIDERED AS TEMPORARY INSTALLATION.
5. SEE "REMOVAL LAYOUT" FOR MORE DETAILS.

STATE OF TEXAS
DERRON S. VINCIK
84028
REGISTERED PROFESSIONAL ENGINEER

The seal appearing on this document was authorized by Derron S. Vincik P.E. 84028, on April 2, 1999.

Derron S. Vincik

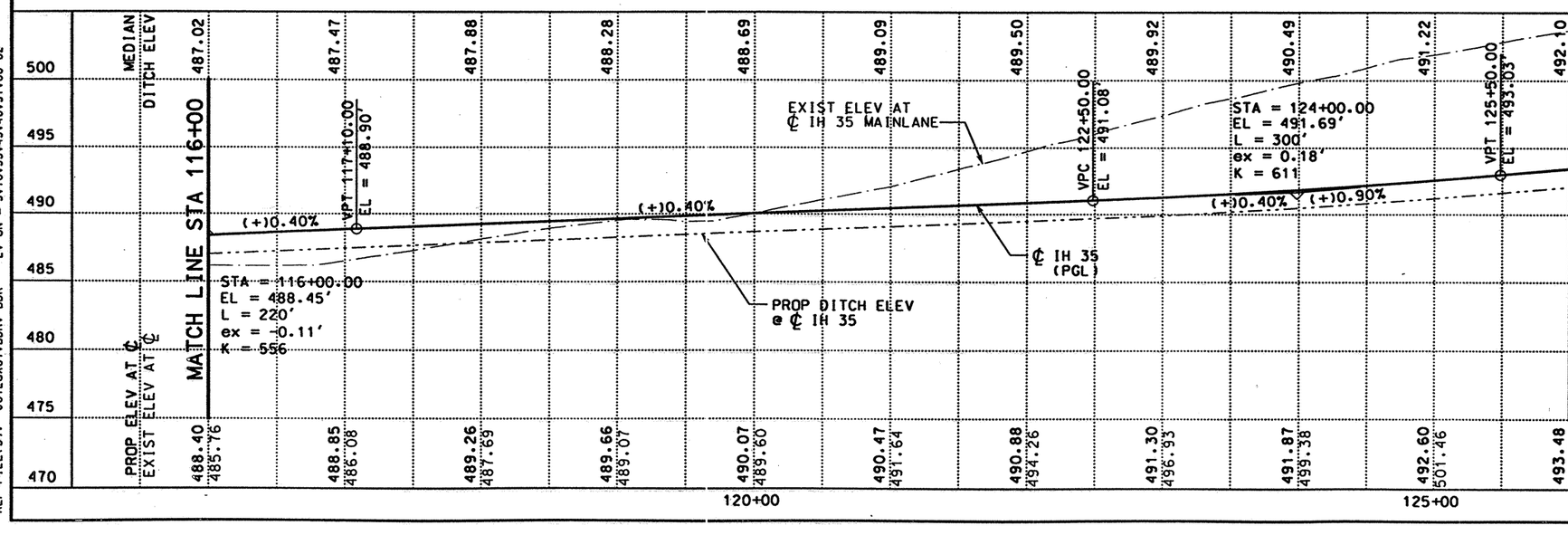

DATE	BY	REV	REVISION

© 1999 Texas Department of Transportation

Brown & Root
HOUSTON, TEXAS

IH 35
MAINLANES

PLAN AND PROFILE
STA 116+00 TO STA 126+00

0 50 100
SCALE: 1"=100' HORIZ
1"=10' VERT

SHEET 2 OF 7

FED RD DIV NO	STATE PROJECT NO		SHEET NO
6	NH-99(462)		279
STATE	STATE DIST NO		COUNTY
TEXAS	22		WEBB
CONT	SECT	JOB	HIGHWAY NO
0018	06	131	IH 35

REF FILE(S): J01LOX01.PRO, J01LOX01.UTI, J01LOX01.ILL, J01LOX01.FND, J01LOX01.DRN
LV ON = 1-63, LV ON = 1-63, LV ON = 20, LV ON = 35, LV ON = 8

REF FILE(S): J01LOX01.BCK, J01LOX01.EOP, J01LOX01.EOP, J01LOX01.BDR
LV ON = 1-30, LV ON = 1-11.13-17.19-27.29-41.43-53.5, LV ON = 1-44, LV ON = 5.10.35.45.46.57.60-62

D03MXO4.DGN-10 04-02-99 BAR_HO_ES05 \HCIVIL\CF0039\PHASE2

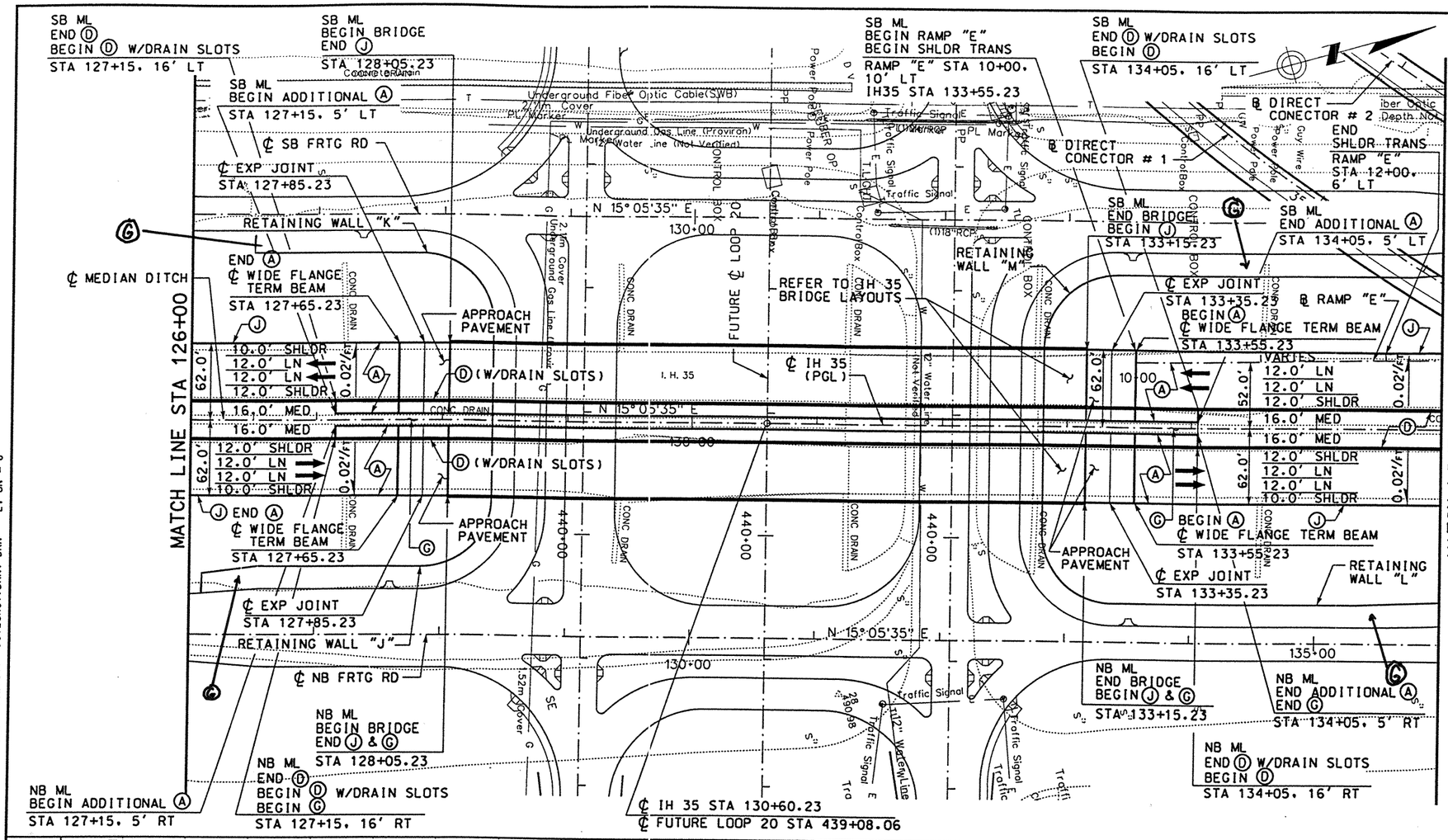

LEGEND:

- Ⓐ CONC PAV (CONT REINF HY STL)(12")
- Ⓑ ASPH CONC PAV (TY A)(4")
- Ⓒ LIME TREATED SUBGRADE (8")
- Ⓓ SINGLE SLOPE CONCRETE BARRIER (SSCB) (TYPE 2)
- Ⓔ TYPE II MONO CURB (6")
- Ⓕ CELL FIBER MULCH SEED (PERM) (RURAL)(CLAY)
- Ⓖ CLASS B RIPRAP (4")
- Ⓗ CONC SIDEWALK (4")
- Ⓘ CONC MEDIAN (6")
- Ⓙ SINGLE SLOPE TRAFFIC RAIL(SSTR) w/ DRAIN SLOTS
- Ⓚ RETAINING WALL
- Ⓛ METAL BEAM GUARD FENCE
- Ⓜ BRICK PAVERS
- Ⓝ REMOVE ASPH CONC PAV
- Ⓞ REMOVE CONC PAV
- Ⓟ TYPE II CURB AND GUTTER (6")
- Ⓠ CONCRETE DRIVEWAYS (6")
- Ⓡ ASPH CONC PAV (TY D)(2")
- Ⓢ ASPH CONC PAV (TY A)(8")
- Ⓣ PLANE ASPH CONC PAV (0 - 1")
- Ⓤ SINGLE SLOPE TRAFFIC RAIL (SSTR)
- Ⓥ CHAINLINK FENCE (6')
- Ⓦ ROADWAY UNDERDRAIN
- Ⓧ WHEELCHAIR RAMP TYPE B

NOTES:

1. SEE "GEOMETRIC DATA SUMMARY" FOR ALIGNMENT DATA.
2. REFER TO LOOP 20 AND IH 35 "PLAN AND PROFILE" AND "INTERSECTION LAYOUTS" FOR INTERSECTION DETAILS AND FOR TURNAROUND DETAILS.
3. SEE DC1 & DC2 "BRIDGE LAYOUTS" AND " PLAN AND PROFILE" FOR MORE DETAILS.
4. PAY ITEM Ⓓ SHALL BE CONSIDERED AS TEMPORARY INSTALLATION.
5. SEE "REMOVAL LAYOUT" FOR MORE DETAILS.

STATE OF TEXAS
DERRON S. VINCIK
84028
REGISTERED PROFESSIONAL ENGINEER

The seal appearing on this document was authorized by Derron S. Vincik P.E. 84028, on June 3, 1999.

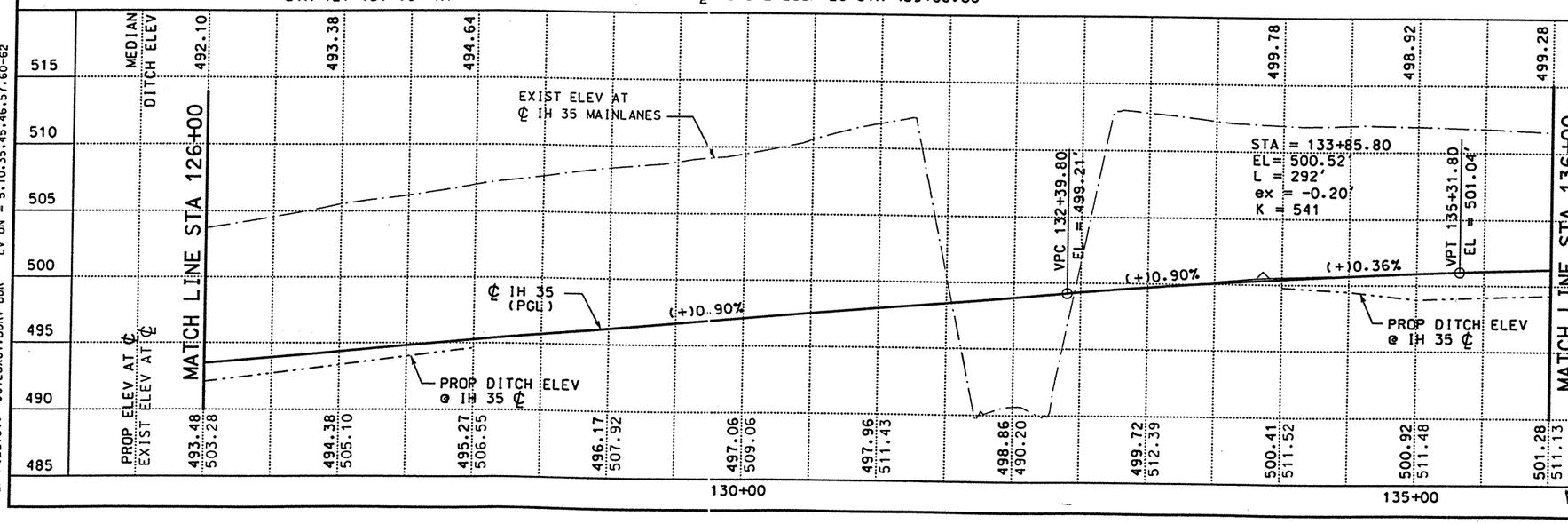

REV. 6-25-99

DATE	BY	REV	REVISION
6/3/99	DV	01	CALLOUTS

© 1999 Texas Department of Transportation

Brown & Root
HOUSTON, TEXAS

IH 35
MAINLANES

PLAN AND PROFILE
STA 126+00 TO STA 136+00

0 50 100
SCALE: 1"=100' HORIZ
1"=10' VERT

SHEET 3 OF 7

FED RD DIV NO	STATE PROJECT NO	SHEET NO
6	NH-99(462)	280

STATE	STATE DIST NO	COUNTY
TEXAS	22	WEBB

CONT	SECT	JOB	HIGHWAY NO
0018	06	131	IH 35

REF FILE(S): J01LOX01.PRO, PRO LV ON = 1-63
J01LOX01.UTI, UTI LV ON = 1-63
J01LOX01.ILL, ILL LV ON = 20
J01LOX01.FND, FND LV ON = 35
J01LOX01.DRN, DRN LV ON = 8

REF FILE(S): J01LOX01.BCK, BCK LV ON = 1-30
J01LOX01.EOP, EDP LV ON = 1-11,13-17,19-27,29-41,43-53,5
J01LOX01.EOP, ALG LV ON = 1-44
J01LOX01.BDR, BDR LV ON = 5,10,35,45,46,57,60-62

D03MX05.DGN-14 05-28-99 BAR_HO_ES05 \HCIVIL\CF0039\PHASE2

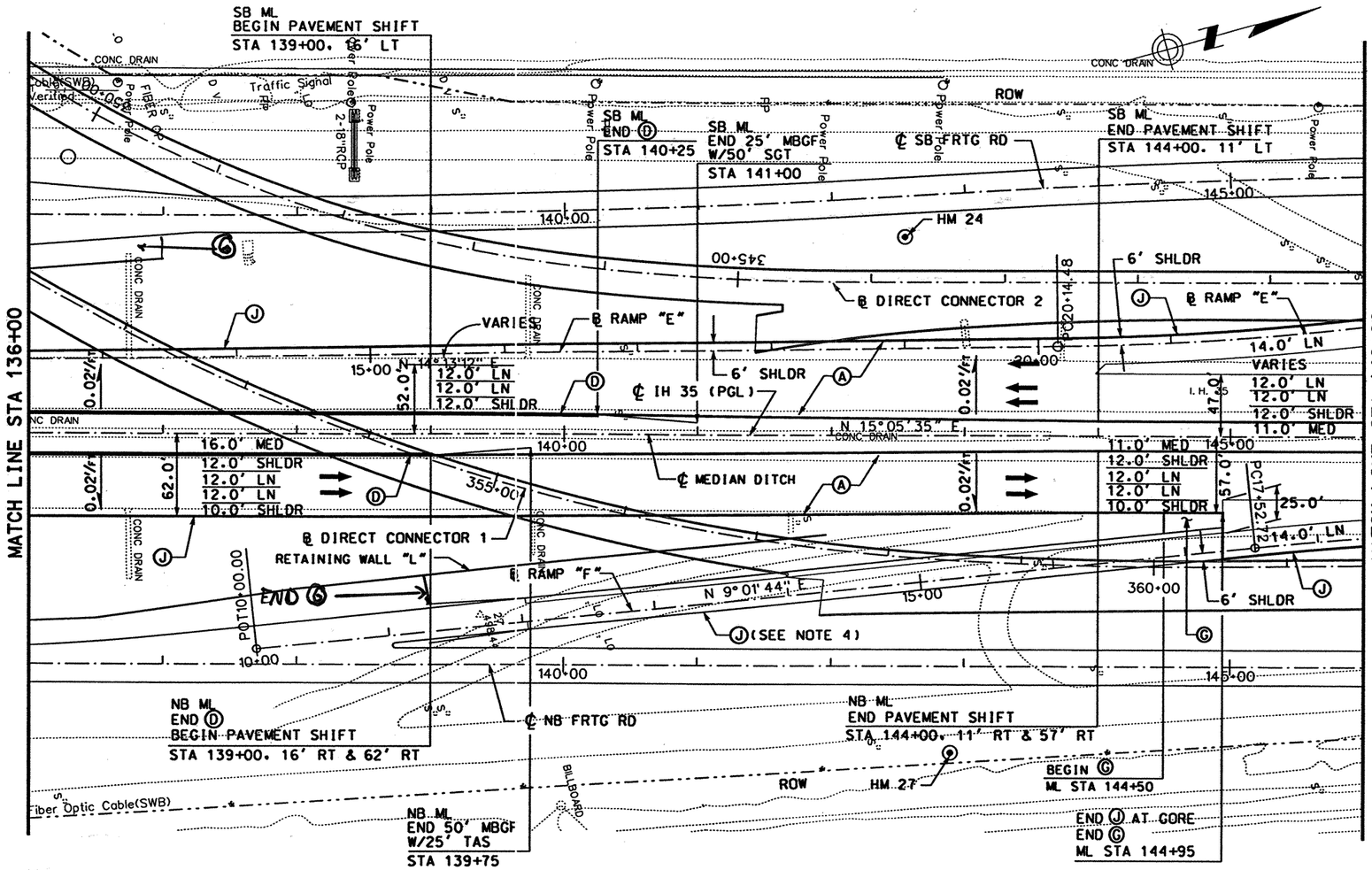

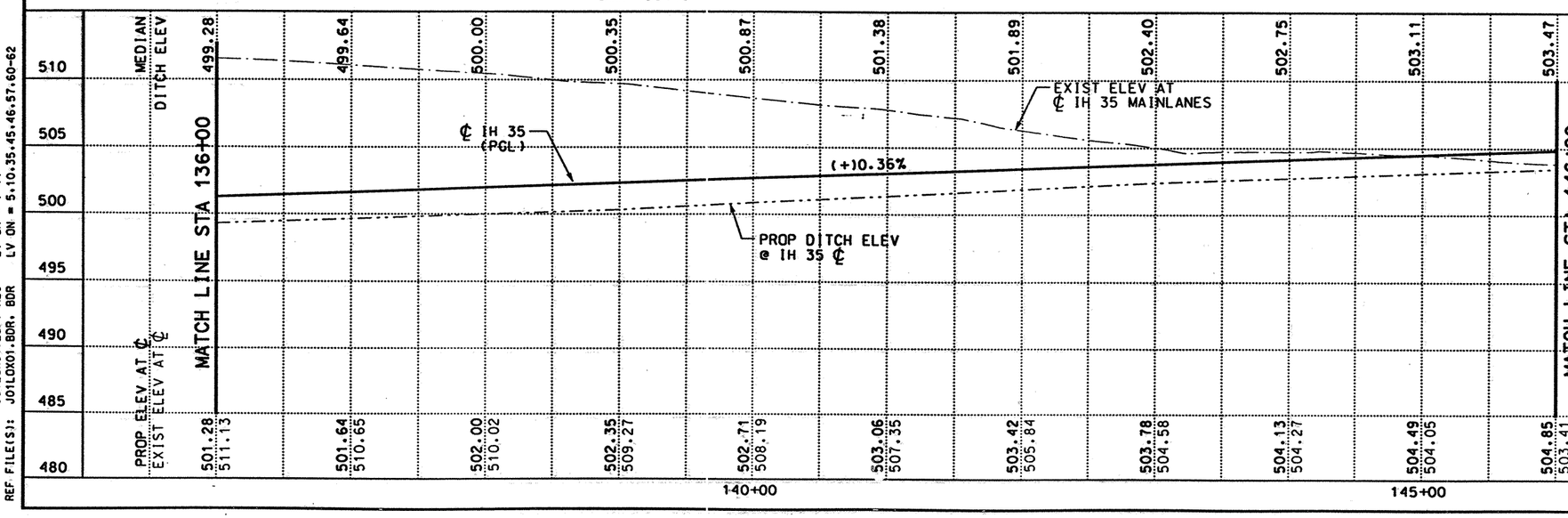

LEGEND:

- Ⓐ CONC PAV (CONT REINF HY STL)(12")
- Ⓑ ASPH CONC PAV (TY A)(4")
- Ⓒ LIME TREATED SUBGRADE (8")
- Ⓓ SINGLE SLOPE CONCRETE BARRIER (SSCB) (TYPE 2)
- Ⓔ TYPE II MONO CURB (6")
- Ⓕ CELL FIBER MULCH SEED (PERM) (RURAL)(CLAY)
- Ⓖ CLASS B RIPRAP (4")
- Ⓗ CONC SIDEWALK (4")
- Ⓘ CONC MEDIAN (6")
- Ⓙ SINGLE SLOPE TRAFFIC RAIL(SSTR) w/ DRAIN SLOTS
- Ⓚ RETAINING WALL
- Ⓛ METAL BEAM GUARD FENCE
- Ⓜ BRICK PAVERS
- Ⓝ REMOVE ASPH CONC PAV
- Ⓞ REMOVE CONC PAV
- Ⓟ TYPE II CURB AND GUTTER (6")
- Ⓠ CONCRETE DRIVEWAYS (6")
- Ⓡ ASPH CONC PAV (TY D)(2")
- Ⓢ ASPH CONC PAV (TY A)(8")
- Ⓣ PLANE ASPH CONC PAV (0 - 1")
- Ⓤ SINGLE SLOPE TRAFFIC RAIL (SSTR)
- Ⓥ CHAINLINK FENCE (6')
- Ⓦ ROADWAY UNDERDRAIN
- Ⓧ WHEELCHAIR RAMP TYPE B

NOTES:

1. SEE "GEOMETRIC DATA SUMMARY" FOR ALIGNMENT DATA.
2. SEE DC1 & DC2 " BRIDGE LAYOUTS" AND "PLAN AND PROFILE" FOR MORE DETAILS.
3. SEE "RAMP "E" PLAN AND PROFILE" FOR MORE DETAILS.
4. SEE "RAMP "F" PLAN AND PROFILE" FOR MORE DETAILS.
5. PAY ITEM Ⓓ SHALL BE CONSIDERED AS TEMPORARY INSTALLATION.
6. SEE "REMOVAL LAYOUT" FOR MORE DETAILS.

STATE OF TEXAS
DERRON S. VINCIK
84028
REGISTERED PROFESSIONAL ENGINEER

The seal appearing on this document was authorized by Derron S. Vincik P.E. 84028, on April 2, 1999.

Derron S. Vincik

DATE	BY	REV	REVISION

© 1999 Texas Department of Transportation

Brown & Root
HOUSTON, TEXAS

IH 35
MAINLANES

PLAN AND PROFILE
STA 136+00 TO STA 146+00

0 50 100
SCALE: 1"=100' HORIZ
1"=10' VERT

SHEET 4 OF 7

FED RD DIV NO	STATE PROJECT NO	SHEET NO
6	NH-99(462)	281
STATE	STATE DIST NO	COUNTY
TEXAS	22	WEBB
CONT	SECT	JOB	HIGHWAY NO
0018	06	131	IH 35

REF FILE(S): J01LDX01.PRO, J01LDX01.UTI, J01LDX01.ILL, J01LDX01.FND, J01LDX01.DRN
LV ON = 1-63, LV ON = 1-63, LV ON = 20, LV ON = 35, LV ON = 8

REF FILE(S): J01LDX01.BCK, J01LDX01.EOP, J01LDX01.EOP, J01LDX01.BDR
LV ON = 1-30, LV ON = 1-11,13-17,19-27,29-41,43-53,5, LV ON = 1-44, LV ON = 5,10,35,45,46,57,60-62

04-02-99 BAR_HO_ES05 \HCIVIL\CF0039\PHASE2 D03IMX06.DGN-12

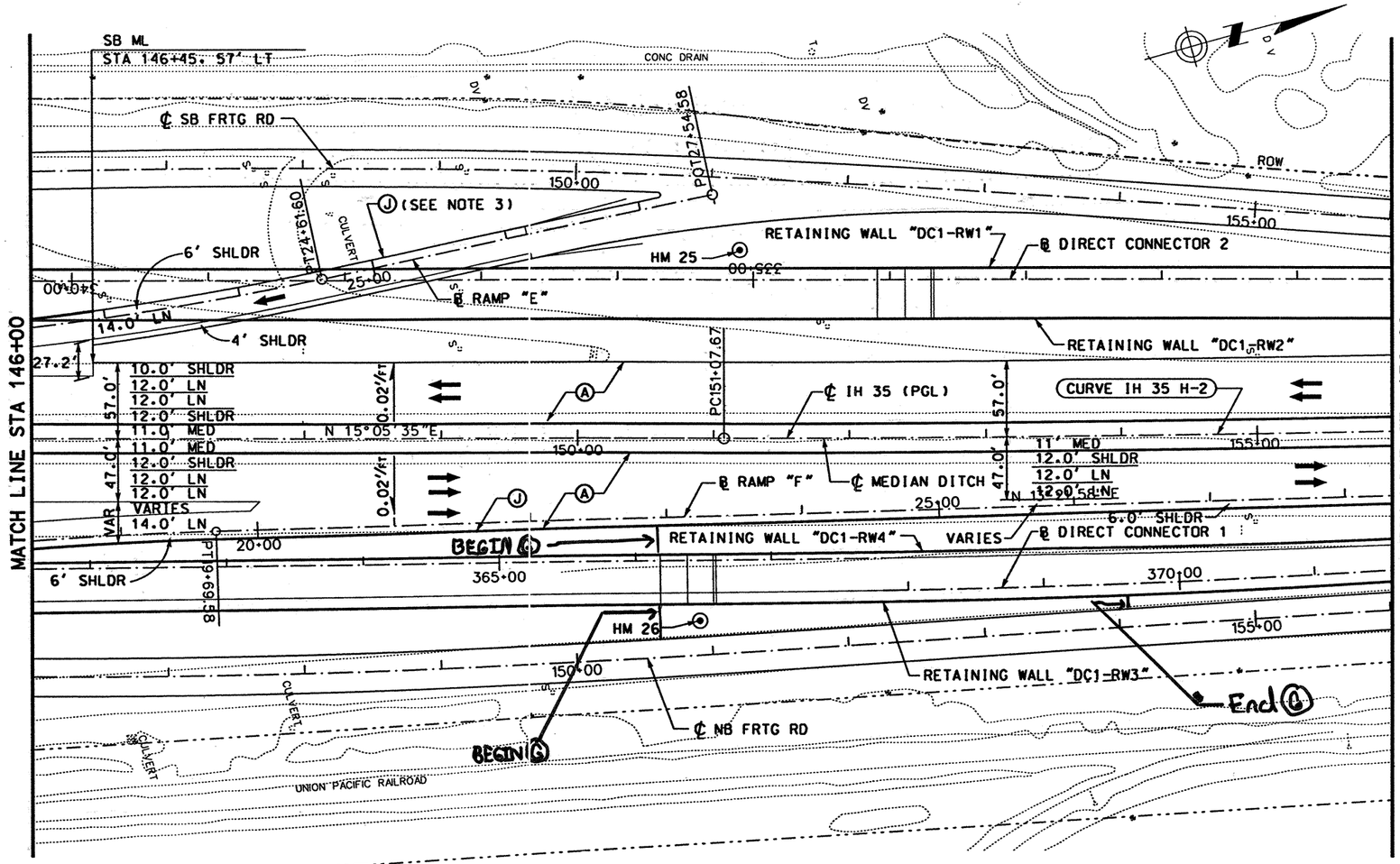

LEGEND:

- (A) CONC PAV (CONT REINF HY STL)(12")
- (B) ASPH CONC PAV (TY A)(4")
- (C) LIME TREATED SUBGRADE (8")
- (D) SINGLE SLOPE CONCRETE BARRIER (SSCB) (TYPE 2)
- (E) TYPE II MONO CURB (6")
- (F) CELL FIBER MULCH SEED (PERM) (RURAL)(CLAY)
- (G) CLASS B RIPRAP (4")
- (H) CONC SIDEWALK (4")
- (I) CONC MEDIAN (6")
- (J) SINGLE SLOPE TRAFFIC RAIL(SSTR) w/ DRAIN SLOTS
- (K) RETAINING WALL
- (L) METAL BEAM GUARD FENCE
- (M) BRICK PAVERS
- (N) REMOVE ASPH CONC PAV
- (O) REMOVE CONC PAV
- (P) TYPE II CURB AND GUTTER (6")
- (Q) CONCRETE DRIVEWAYS (6")
- (R) ASPH CONC PAV (TY D)(2")
- (S) ASPH CONC PAV (TY A)(8")
- (T) PLANE ASPH CONC PAV (0 - 1")
- (U) SINGLE SLOPE TRAFFIC RAIL (SSTR)
- (V) CHAINLINK FENCE (6')
- (W) ROADWAY UNDERDRAIN
- (X) WHEELCHAIR RAMP TYPE B

NOTES:

1. SEE "GEOMETRIC DATA SUMMARY" FOR ALIGNMENT DATA.
2. SEE DC1 & DC2 " BRIDGE LAYOUTS" AND "PLAN AND PROFILE" FOR MORE DETAILS.
3. SEE "RAMP "E" PLAN AND PROFILE" FOR MORE DETAILS.
4. SEE "RAMP "F" PLAN AND PROFILE" FOR MORE DETAILS.
5. SEE "REMOVAL LAYOUT" FOR MORE DETAILS.

STATE OF TEXAS
DERRON S. VINCIK
84028
REGISTERED PROFESSIONAL ENGINEER

The seal appearing on this document was authorized by Derron S. Vincik P.E. 84028, on April 2, 1999.

Derron S. Vincik

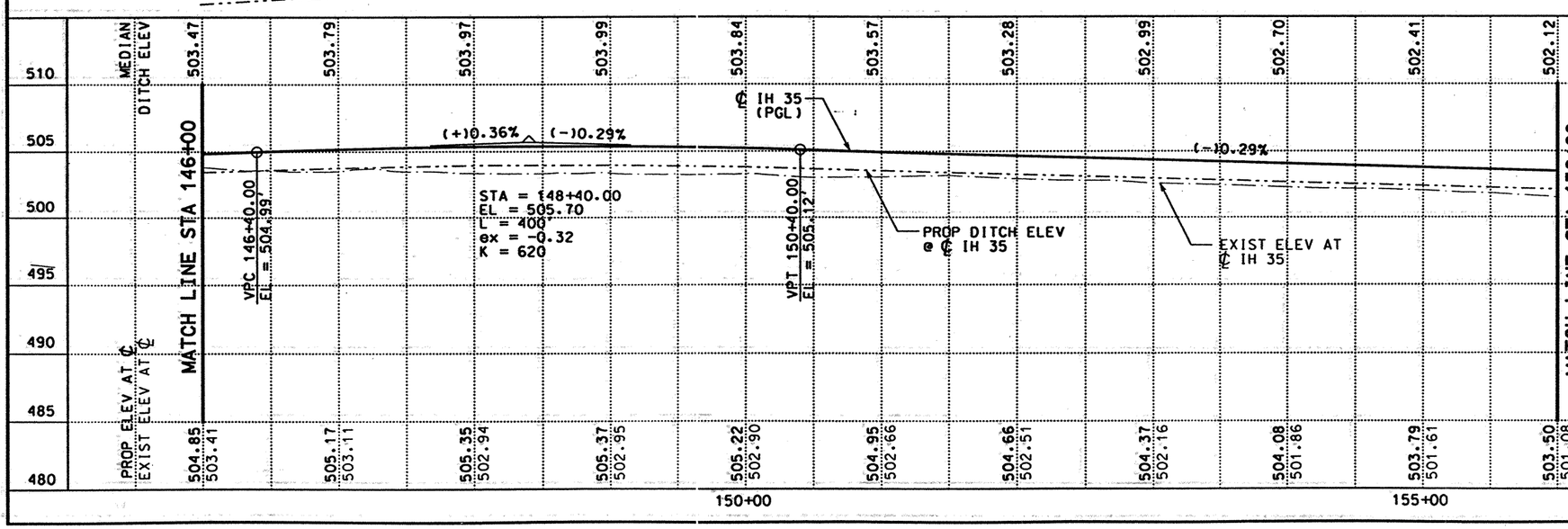

DATE	BY	REV	REVISION

© 1999 Texas Department of Transportation

Brown & Root
HOUSTON, TEXAS

IH 35
MAINLANES

PLAN AND PROFILE
STA 146+00 TO STA 156+00

0 50 100
SCALE: 1"=100' HORIZ
1"=10' VERT

SHEET 5 OF 7

FED RD DIV NO	STATE PROJECT NO	SHEET NO
6	NH-99(462)	182

STATE	STATE DIST NO	COUNTY
TEXAS	22	WEBB

CONT	SECT	JOB	HIGHWAY NO
0018	06	131	IH 35

REF FILE(S): J01LDX01.PRO, PRO LV ON = 1-63
J01LDX01.UTI, UTI LV ON = 1-63
J01LDX01.ILL, ILL LV ON = 20
J01LDX01.FND, FND LV ON = 35
J01LDX01.DRN, DRN LV ON = 8

REF FILE(S): J01LDX01.BCK, BCK LV ON = 1-30
J01LDX01.EDP, EDP LV ON = 1-11,13-17,19-27,29-41,43-53,5
J01LDX01.ALG, ALG LV ON = 1-44
J01LDX01.BDR, BDR LV ON = 5,10,35,45,46,57,60-62

DO3IMX07.DGN-11 04-02-99 BAR_HO_ES05 \HCIVIL\CF0039\PHASE2

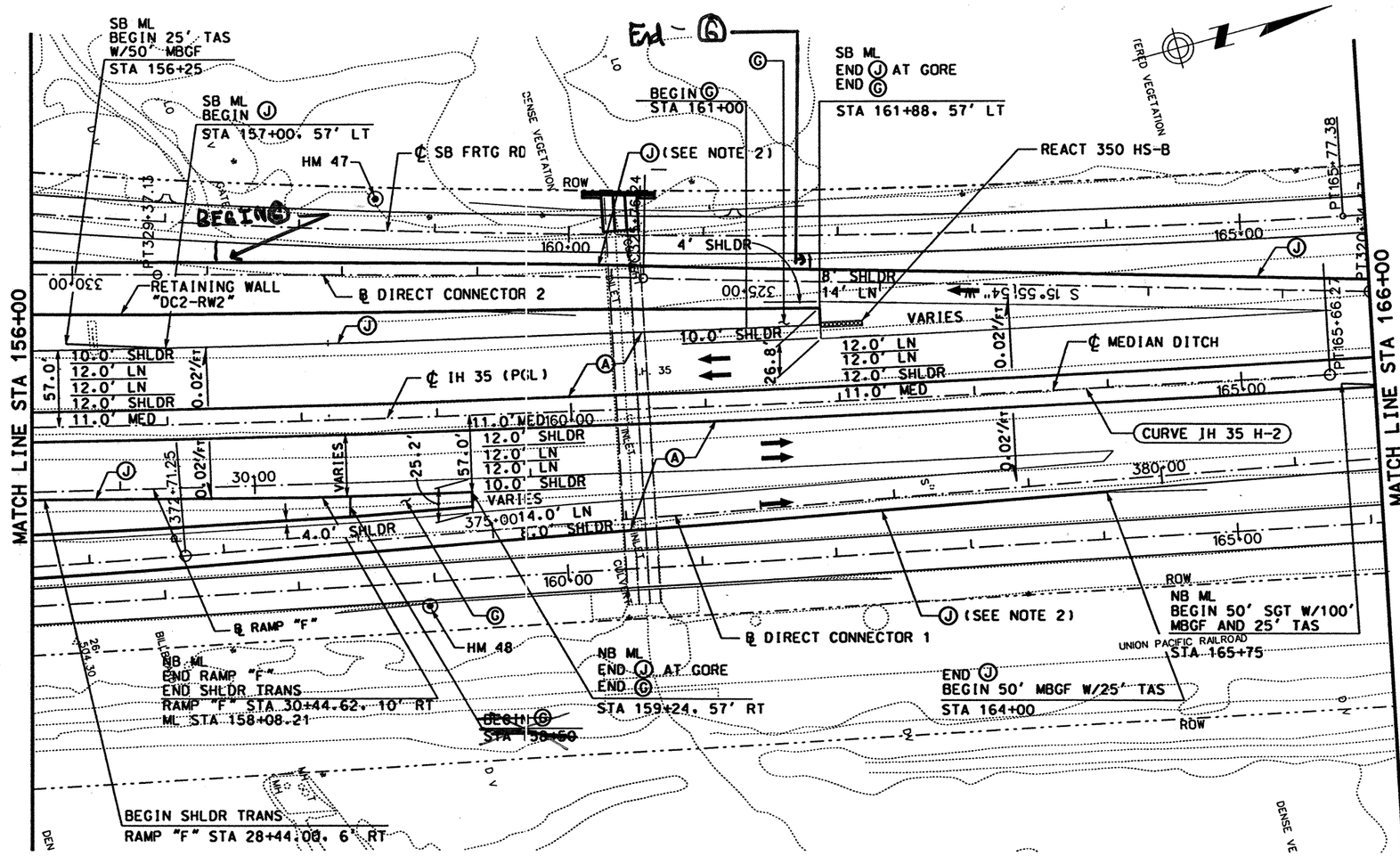

LEGEND:

- (A) CONC PAV (CONT REINF HY STL)(12")
- (B) ASPH CONC PAV (TY A)(4")
- (C) LIME TREATED SUBGRADE (8")
- (D) SINGLE SLOPE CONCRETE BARRIER (SSCB) (TYPE 2)
- (E) TYPE II MONO CURB (6")
- (F) CELL FIBER MULCH SEED (PERM) (RURAL)(CLAY)
- (G) CLASS B RIPRAP (4")
- (H) CONC SIDEWALK (4")
- (I) CONC MEDIAN (6")
- (J) SINGLE SLOPE TRAFFIC RAIL(SSTR) w/ DRAIN SLOTS
- (K) RETAINING WALL
- (L) METAL BEAM GUARD FENCE
- (M) BRICK PAVERS
- (N) REMOVE ASPH CONC PAV
- (O) REMOVE CONC PAV
- (P) TYPE II CURB AND GUTTER (6")
- (Q) CONCRETE DRIVEWAYS (6")
- (R) ASPH CONC PAV (TY D)(2")
- (S) ASPH CONC PAV (TY A)(8")
- (T) PLANE ASPH CONC PAV (0 - 1")
- (U) SINGLE SLOPE TRAFFIC RAIL (SSTR)
- (V) CHAINLINK FENCE (6')
- (W) ROADWAY UNDERDRAIN
- (X) WHEELCHAIR RAMP TYPE B

NOTES:

1. SEE "GEOMETRIC DATA SUMMARY" FOR ALIGNMENT DATA.
2. SEE DC1 & DC2 "BRIDGE LAYOUTS" AND "PLAN & PROFILE" FOR MORE DETAILS.
3. SEE "REMOVAL LAYOUT" FOR MORE DETAILS.
4. SEE "CULVERT LAYOUT" FOR MORE DETAILS.

STATE OF TEXAS
DERRON S. VINCIK
84028
REGISTERED PROFESSIONAL ENGINEER

The seal appearing on this document was authorized by Derron S. Vincik P.E. 84028, on April 2, 1999.

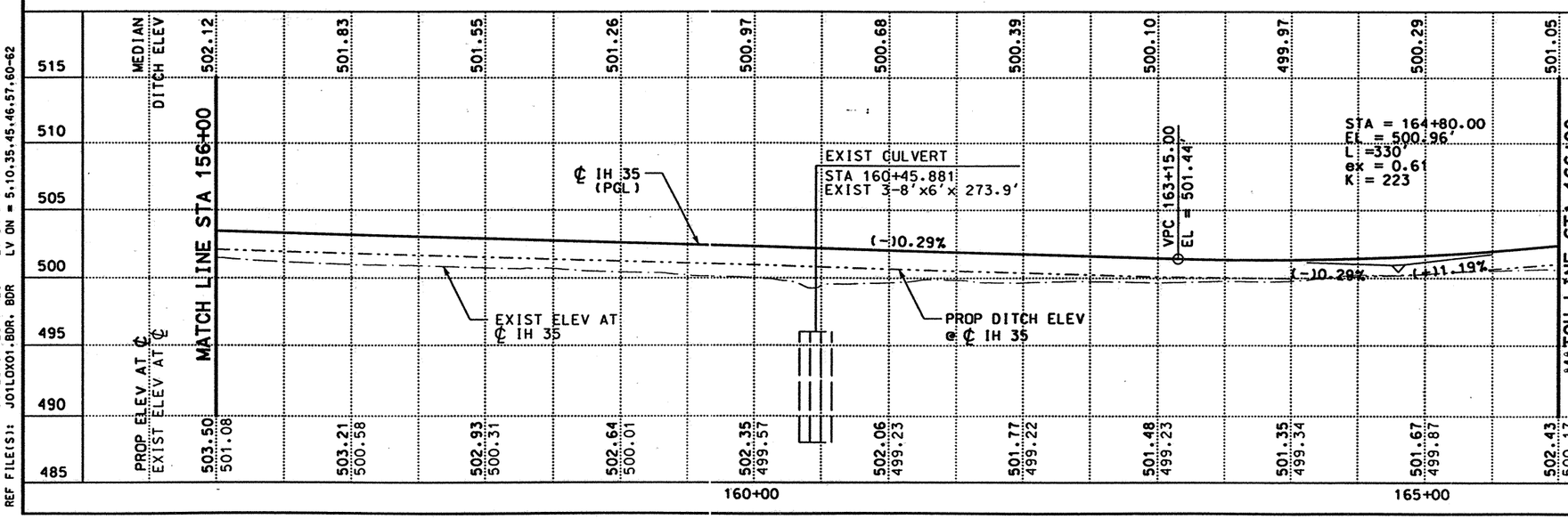

DATE	BY	REV	REVISION

© 1999 Texas Department of Transportation

Brown & Root
HOUSTON, TEXAS

IH 35
MAINLANES

PLAN AND PROFILE
STA 156+00 TO STA 166+00

0 50 100
SCALE: 1"=100' HORIZ
1"=10' VERT

SHEET 6 OF 7

FED RD DIV NO	STATE PROJECT NO	SHEET NO
6	NH-99(462)	283

STATE	STATE DIST NO	COUNTY
TEXAS	22	WEBB

CONT	SECT	JOB	HIGHWAY NO
0018	06	131	IH 35

REF FILE(S): J01LDX01.PRO, PRO LV ON = 1-63
J01LDX01.UTI, UTI LV ON = 1-63
J01LDX01.ILL, ILL LV ON = 20
J01LDX01.FND, FND LV ON = 35
J01LDX01.DRN, DRN LV ON = 8

REF FILE(S): J01LDX01.BCK, BCK LV ON = 1-30
J01LDX01.EOP, EOP LV ON = 1-11,13-17,19-27,29-41,43-53,5
J01LDX01.EOP, ALG LV ON = 1-44
J01LDX01.BDR, BDR LV ON = 5,10,35,45,46,57,60-62

D03MX08.DGN-10 04-02-99 BAR_HO_ES05 \HCIVIL\CF0039\PHASE2

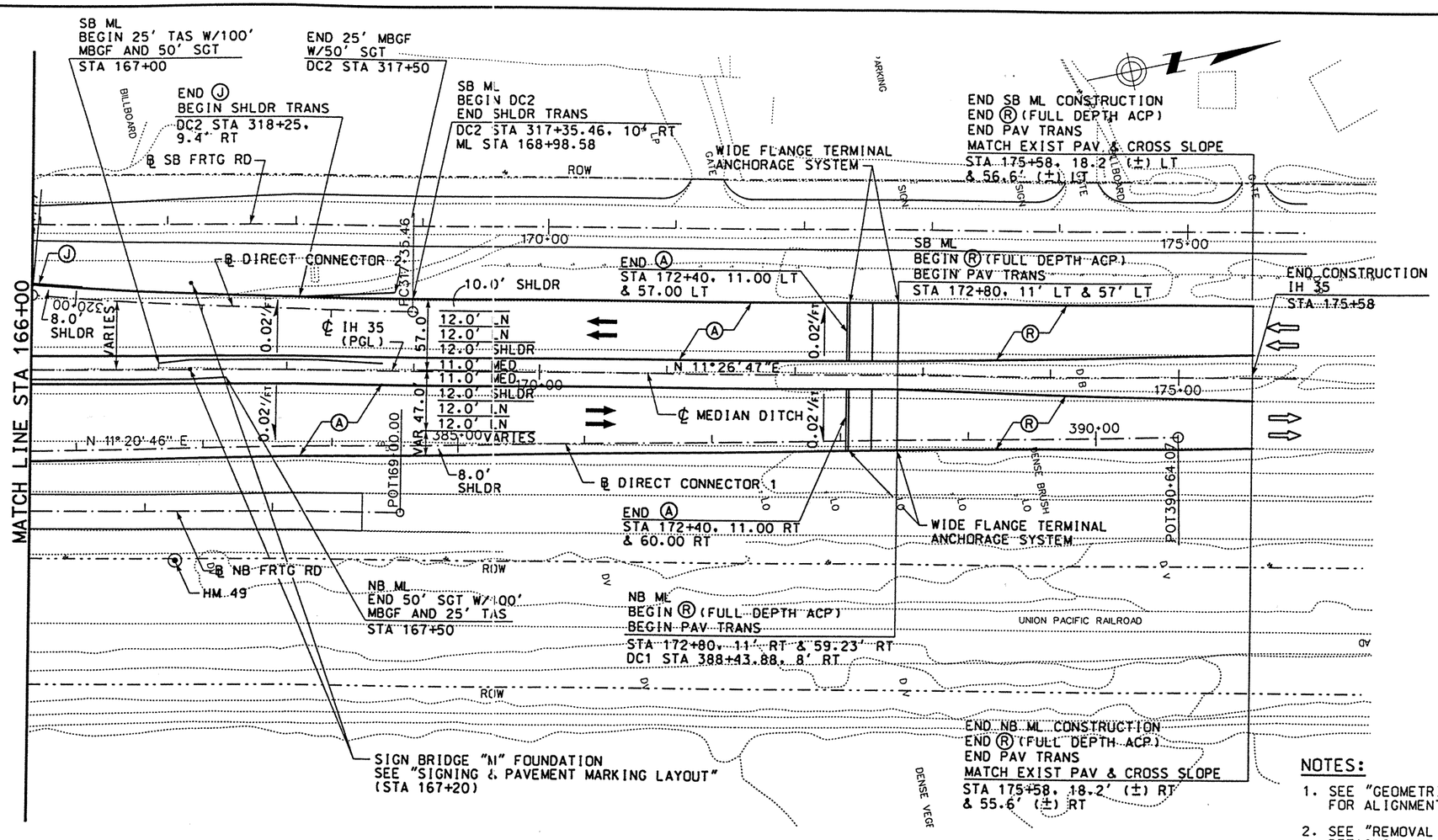

LEGEND:

- Ⓐ CONC PAV (CONT REINF HY STL)(12")
- Ⓑ ASPH CONC PAV (TY A)(4")
- Ⓒ LIME TREATED SUBGRADE (8")
- Ⓓ SINGLE SLOPE CONCRETE BARRIER (SSCB) (TYPE 2)
- Ⓔ TYPE II MONO CURB (6")
- Ⓕ CELL FIBER MULCH SEED (PERM) (RURAL)(CLAY)
- Ⓖ CLASS B RIPRAP (4")
- Ⓗ CONC SIDEWALK (4")
- Ⓘ CONC MEDIAN (6")
- Ⓙ SINGLE SLOPE TRAFFIC RAIL(SSTR) w/ DRAIN SLOTS
- Ⓚ RETAINING WALL
- Ⓛ METAL BEAM GUARD FENCE
- Ⓜ BRICK PAVERS
- Ⓝ REMOVE ASPH CONC PAV
- Ⓞ REMOVE CONC PAV
- Ⓟ TYPE II CURB AND GUTTER (6")
- Ⓠ CONCRETE DRIVEWAYS (6")
- Ⓡ ASPH CONC PAV (TY D)(2")
- Ⓢ ASPH CONC PAV (TY A)(8")
- Ⓣ PLANE ASPH CONC PAV (0 - 1")
- Ⓤ SINGLE SLOPE TRAFFIC RAIL (SSTR)
- Ⓥ CHAINLINK FENCE (6')
- Ⓦ ROADWAY UNDERDRAIN
- Ⓧ WHEELCHAIR RAMP TYPE B

NOTES:

1. SEE "GEOMETRIC DATA SUMMARY" FOR ALIGNMENT DATA.
2. SEE "REMOVAL LAYOUT" FOR MORE DETAILS.

STATE OF TEXAS
DERRON S. VINCIK
84028
REGISTERED PROFESSIONAL ENGINEER

The seal appearing on this document was authorized by Derron S. Vincik P.E. 84028, on June 3, 1999.

Derron S. Vincik

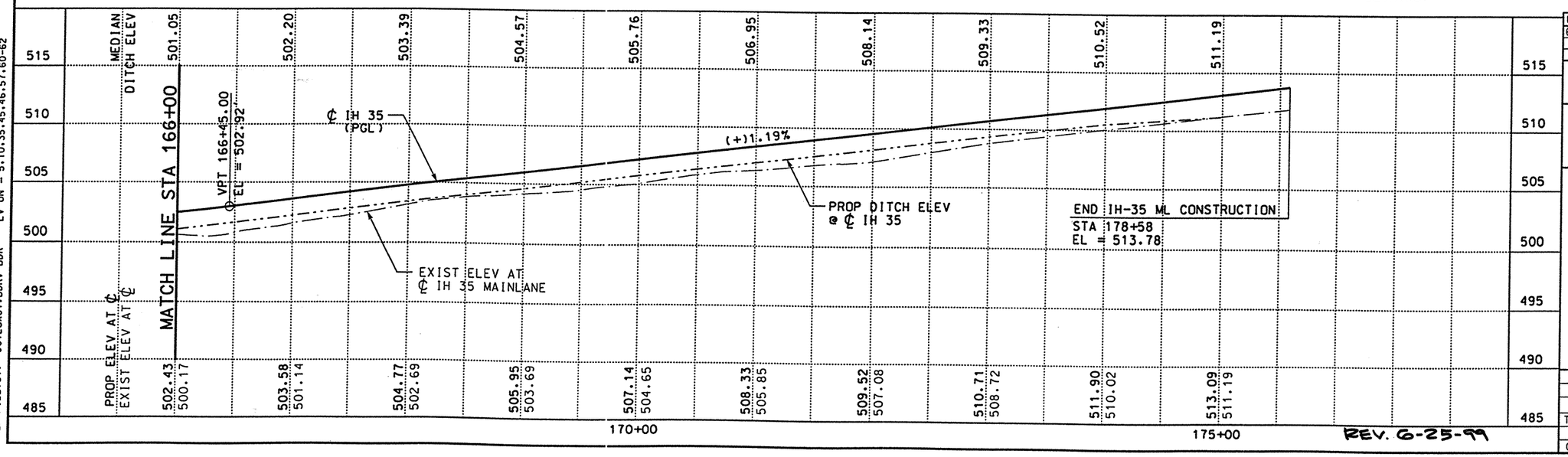

REV. 6-25-99

DATE	BY	REV	REVISION
6/3/99	DV	01	WIDE FLANGE TERMINAL ANCHORAGE SYSTEM

© 1999 Texas Department of Transportation

Brown & Root
HOUSTON, TEXAS

IH 35
MAINLANES

PLAN AND PROFILE
STA 166+00 TO END

0 50 100
SCALE: 1"=100' HORIZ
1"=10' VERT

SHEET 7 OF 7

FED RD DIV NO	STATE PROJECT NO	SHEET NO
6	NH-99(462)	284

STATE	STATE DIST NO	COUNTY
TEXAS	22	WEBB

CONT	SECT	JOB	HIGHWAY NO
0018	06	131	IH 35

REF FILE(S): J01LOX01.PRO, PRO LV ON = 1-63
J01LOX01.UTI, UTI LV ON = 1-63
J01LOX01.ILL, ILL LV ON = 20
J01LOX01.FND, FND LV ON = 35
J01LOX01.DRN, DRN LV ON = 8

REF FILE(S): J01LOX01.BCK, BCK LV ON = 1-30
J01LOX01.EDP, EDP LV ON = 1-11,13-17,19-27,29-41,43-53,5
J01LOX01.EDP, ALG LV ON = 1-44
J01LOX01.BDR, BDR LV ON = 5,10,35,45,46,57,60-62

D03MX09.DGN-13 06-02-99 BAR_HO_ES05 \HCIVIL\CF0039\PHASE2

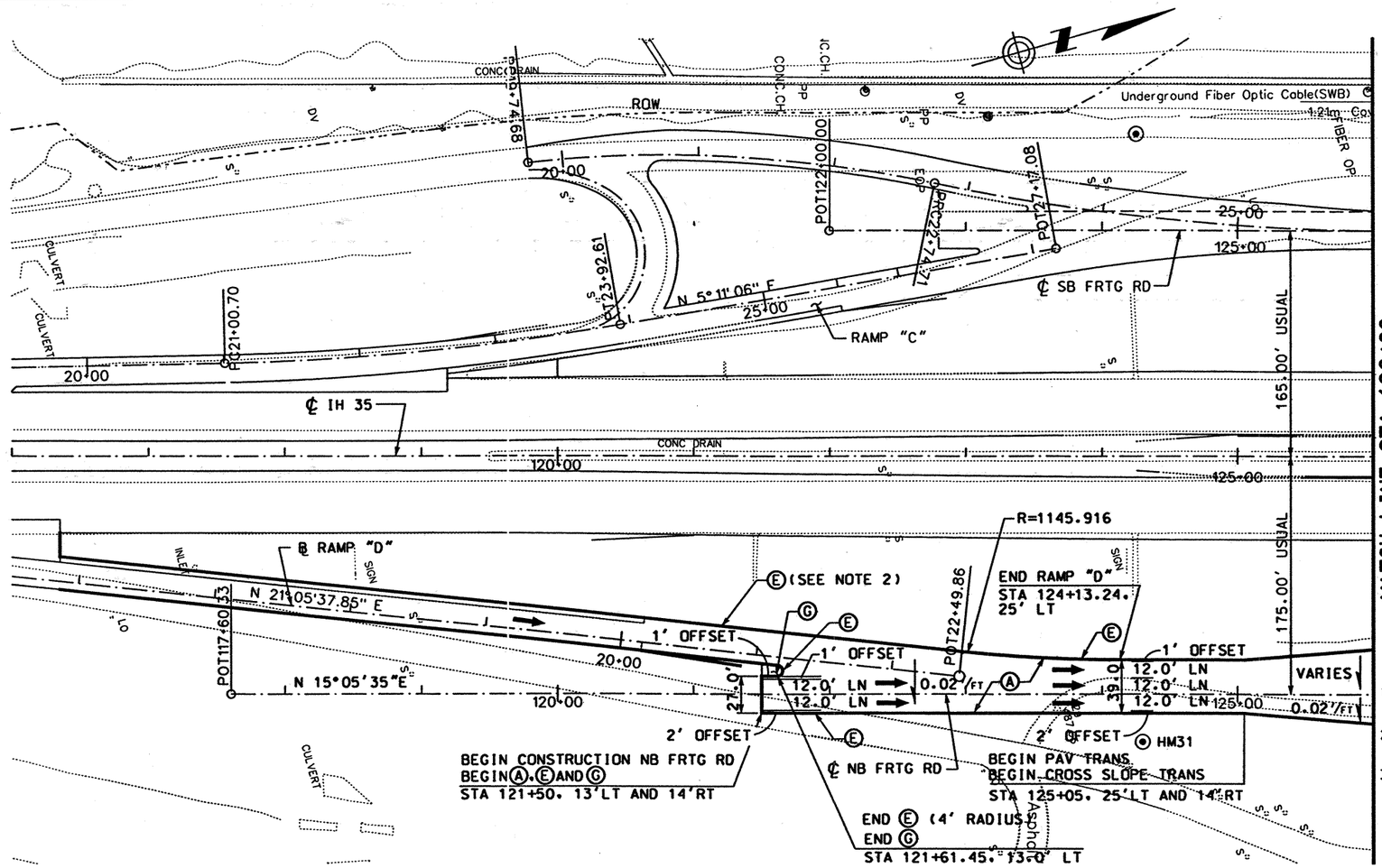

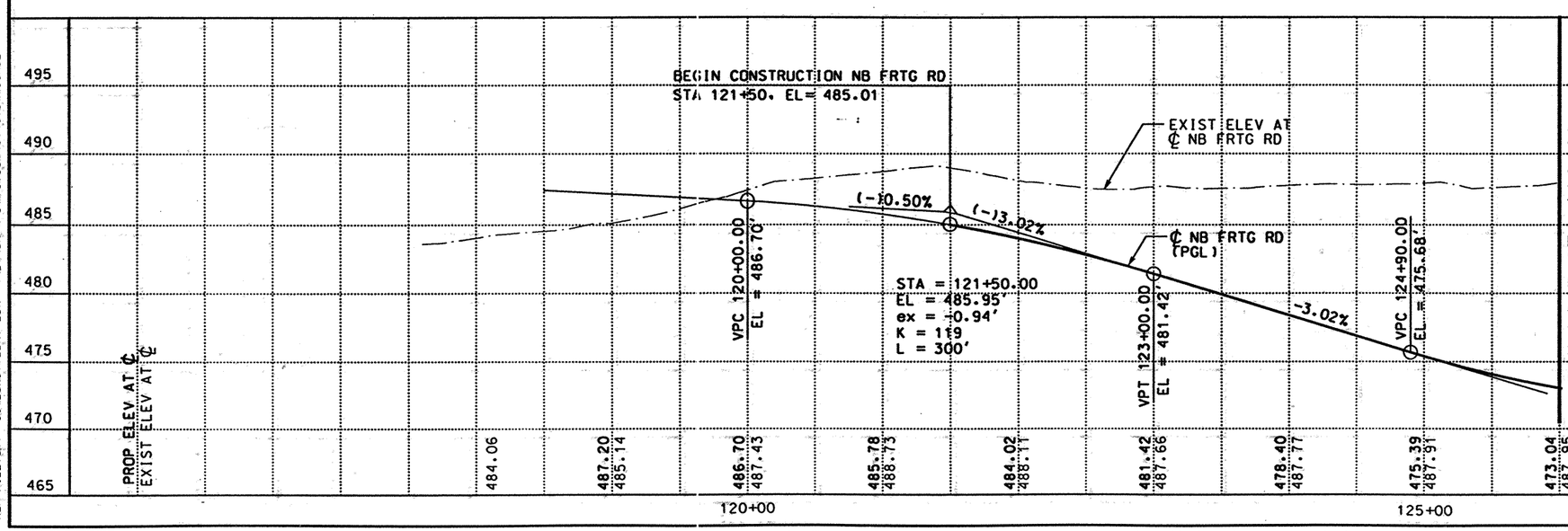

LEGEND:

- (A) CONC PAV (CONT REINF HY STL)(12")
- (B) ASPH CONC PAV (TY A)(4")
- (C) LIME TREATED SUBGRADE (8")
- (D) SINGLE SLOPE CONCRETE BARRIER (SSCB) (TYPE 2)
- (E) TYPE II MONO CURB (6")
- (F) CELL FIBER MULCH SEED (PERM) (RURAL)(CLAY)
- (G) CLASS B RIPRAP (4")
- (H) CONC SIDEWALK (4")
- (I) CONC MEDIAN (6")
- (J) SINGLE SLOPE TRAFFIC RAIL(SSTR) w/ DRAIN SLOTS
- (K) RETAINING WALL
- (L) METAL BEAM GUARD FENCE
- (M) BRICK PAVERS
- (N) REMOVE ASPH CONC PAV
- (O) REMOVE CONC PAV
- (P) TYPE II CURB AND GUTTER (6")
- (Q) CONCRETE DRIVEWAYS (6")
- (R) ASPH CONC PAV (TY D)(2")
- (S) ASPH CONC PAV (TY A)(8")
- (T) PLANE ASPH CONC PAV (0 - 1")
- (U) SINGLE SLOPE TRAFFIC RAIL (SSTR)
- (V) CHAINLINK FENCE (6')
- (W) ROADWAY UNDERDRAIN
- (X) WHEELCHAIR RAMP TYPE B

NOTES:

1. SEE "GEOMETRIC DATA SUMMARY" FOR ALIGNMENT DATA.
2. SEE "RAMP "D" PLAN AND PROFILE" FOR DETAILS.
3. SEE "REMOVAL LAYOUT" FOR MORE DETAILS.

STATE OF TEXAS
DERRON S. VINCIK
84028
REGISTERED PROFESSIONAL ENGINEER

The seal appearing on this document was authorized by Derron S. Vincik P.E. 84028, on April 2, 1999.

Derron S. Vincik

DATE	BY	REV	REVISION

© 1999 Texas Department of Transportation

Brown & Root
HOUSTON, TEXAS

IH 35
NORTHBOUND FRONTAGE ROAD

PLAN AND PROFILE
STA 116+00 TO STA 126+00

0 50 100
SCALE: 1"=100' HORIZ
1"=10' VERT

SHEET 1 OF 6

FED RD DIV NO	STATE PROJECT NO	SHEET NO
6	NH-99(462)	285

STATE	STATE DIST NO	COUNTY
TEXAS	22	WEBB

CONT	SECT	JOB	HIGHWAY NO
0018	06	131	IH 35

D03FNX04.DGN-11 03-07-99 BAR_HO_ES05 \HCIVIL\CF0039\PHASE2

REF FILE(S): J01LDX01.PRO, PRO LV ON = 1-63
J01LDX01.UTI, UTI LV ON = 1-63
J01LDX01.ILL, ILL LV ON = 19
J01LDX01.FND, FND LV ON = 35
J01LDX01.DRN, DRN LV ON = 8

REF FILE(S): J01LDX01.BCK, BCK LV ON = 1-30
J01LDX01.EDP, EDP LV ON = 1-11,13-17,19-27,29-41,43-53,5
J01LDX01.EDP, ALG LV ON = 1-44
J01LDX01.BDR, BDR LV ON = 5,10,35,45,46,57,60-62

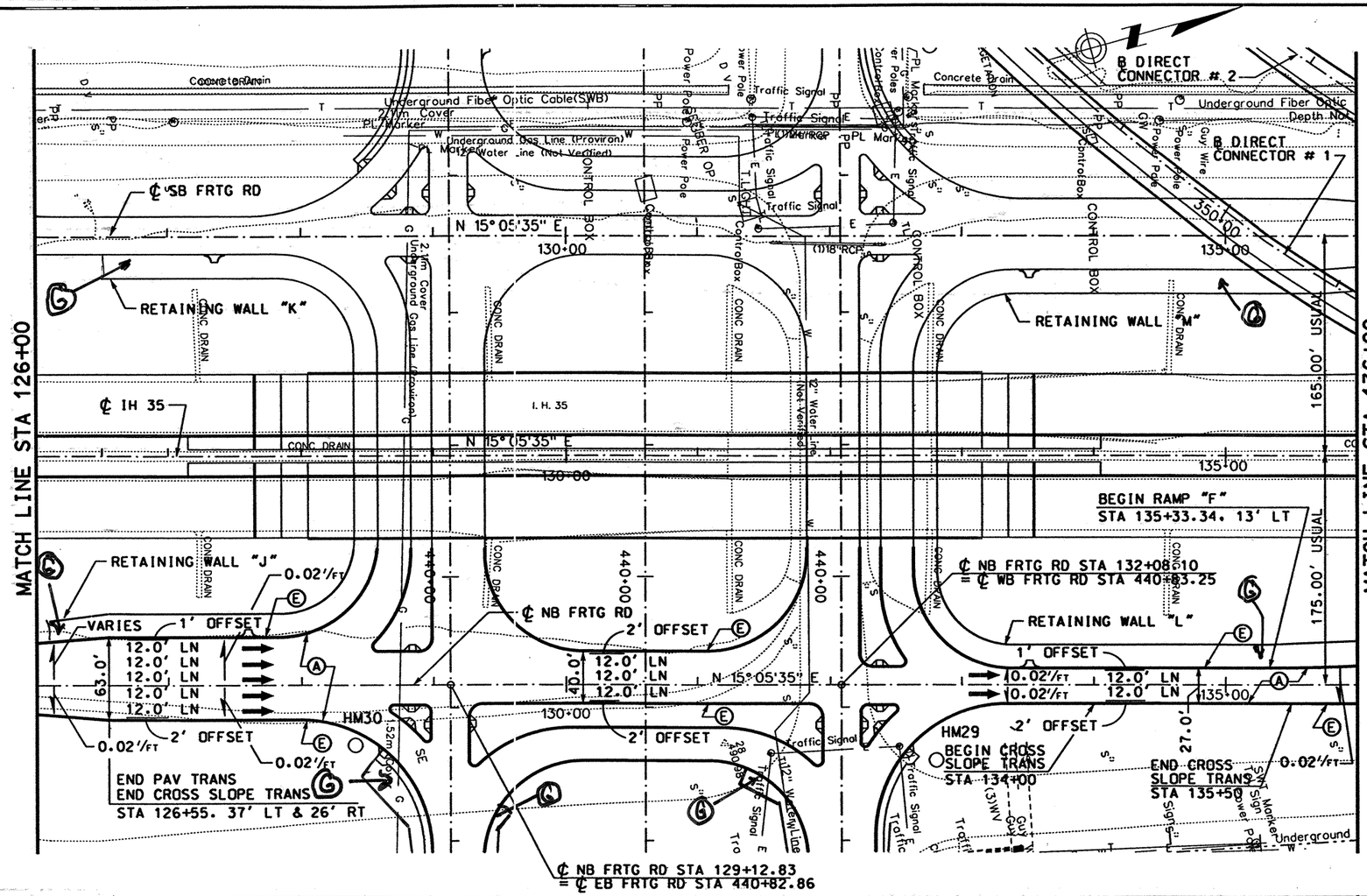

LEGEND:

- Ⓐ CONC PAV (CONT REINF HY STL)(12")
- Ⓑ ASPH CONC PAV (TY A)(4")
- Ⓒ LIME TREATED SUBGRADE (8")
- Ⓓ SINGLE SLOPE CONCRETE BARRIER (SSCB) (TYPE 2)
- Ⓔ TYPE II MONO CURB (6")
- Ⓕ CELL FIBER MULCH SEED (PERM) (RURAL)(CLAY)
- Ⓖ CLASS B RIPRAP (4")
- Ⓗ CONC SIDEWALK (4")
- Ⓘ CONC MEDIAN (6")
- Ⓙ SINGLE SLOPE TRAFFIC RAIL(SSTR) w/ DRAIN SLOTS
- Ⓚ RETAINING WALL
- Ⓛ METAL BEAM GUARD FENCE
- Ⓜ BRICK PAVERS
- Ⓝ REMOVE ASPH CONC PAV
- Ⓞ REMOVE CONC PAV
- Ⓟ TYPE II CURB AND GUTTER (6")
- Ⓠ CONCRETE DRIVEWAYS (6")
- Ⓡ ASPH CONC PAV (TY D)(2")
- Ⓢ ASPH CONC PAV (TY A)(8")
- Ⓣ PLANE ASPH CONC PAV (0 - 1")
- Ⓤ SINGLE SLOPE TRAFFIC RAIL (SSTR)
- Ⓥ CHAINLINK FENCE (6')
- Ⓦ ROADWAY UNDERDRAIN
- Ⓧ WHEELCHAIR RAMP TYPE B

NOTES:

1. SEE "GEOMETRIC DATA SUMMARY" FOR ALIGNMENT DATA.
2. SEE "LOOP 20 AND IH 35 INTERSECTION LAYOUT" FOR DETAILS.
3. SEE "LOOP 20/IH 35 CONTOUR GRADING PLAN" FOR CROSS SLOPES AND ELEVATIONS WITHIN THE INTERSECTION.
4. SEE "REMOVAL LAYOUT" FOR MORE DETAILS.

STATE OF TEXAS
DERRON S. VINCIK
84028
REGISTERED PROFESSIONAL ENGINEER

The seal appearing on this document was authorized by Derron S. Vincik P.E. 84028, on April 2, 1999.

Derron S. Vincik

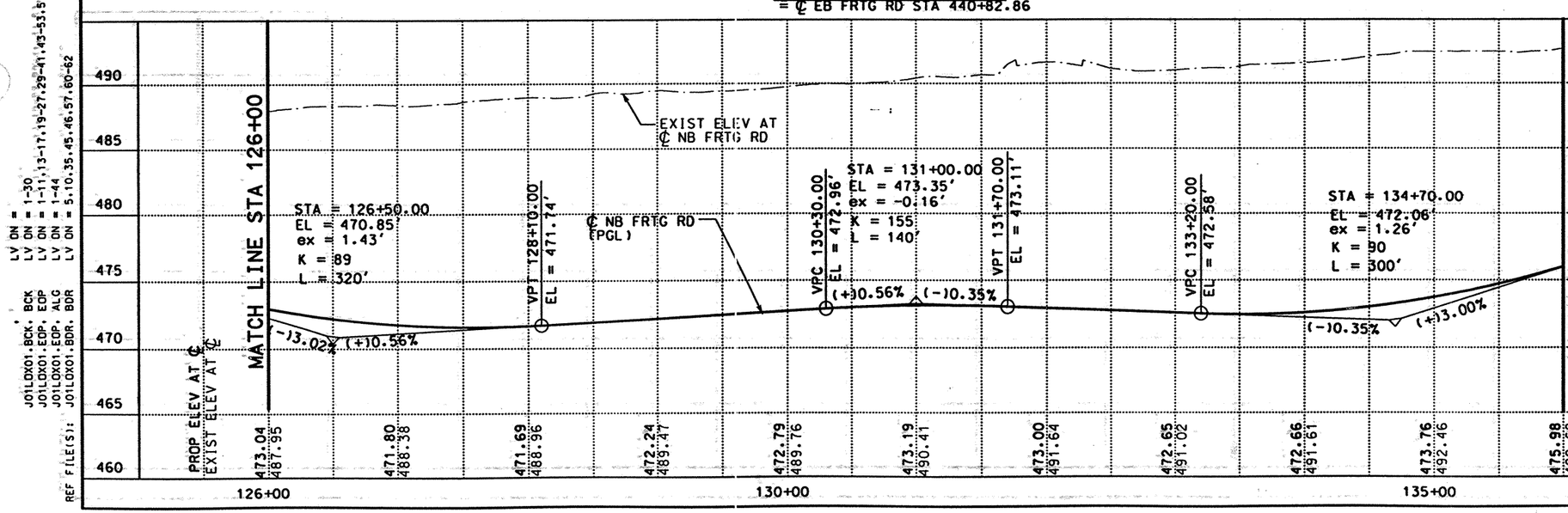

DATE	BY	REV	REVISION

© 1999

Texas Department of Transportation

Brown & Root
HOUSTON, TEXAS

IH 35
NORTHBOUND FRONTAGE ROAD

PLAN AND PROFILE
STA 126+00 TO STA 136+00

0 50 100
SCALE: 1"=100' HORZ
1"=10' VERT

SHEET 2 OF 6

FED RD DIV NO	STATE PROJECT NO	SHEET NO
6	NH-99(462)	206

STATE	STATE DIST NO	COUNTY
TEXAS	22	Wwebb

CONT	SECT	JOB	HIGHWAY NO
0018	06	131	IH 35

REF FILE(S): J01LOX01.PRO, PRO LV ON = 1-63
J01LOX01.UTI, UTI LV ON = 1-63
J01LOX01.ILL, ILL LV ON = 19
J01LOX01.FND, FND LV ON = 35
J01LOX01.DRN, DRN LV ON = 8

REF FILE(S): J01LOX01.BCK, BCK LV ON = 1-30
J01LOX01.EOP, EOP LV ON = 1-11,13-17,19-27,29-41,43-53,5
J01LOX01.EOP, ALG LV ON = 1-44
J01LOX01.BDR, BDR LV ON = 5,10,35,45,46,57,60-62

03-07-99 BAR_HO_ES05 \HCIVIL\CF0039\PHASE2
D03FNX05.DGN-12

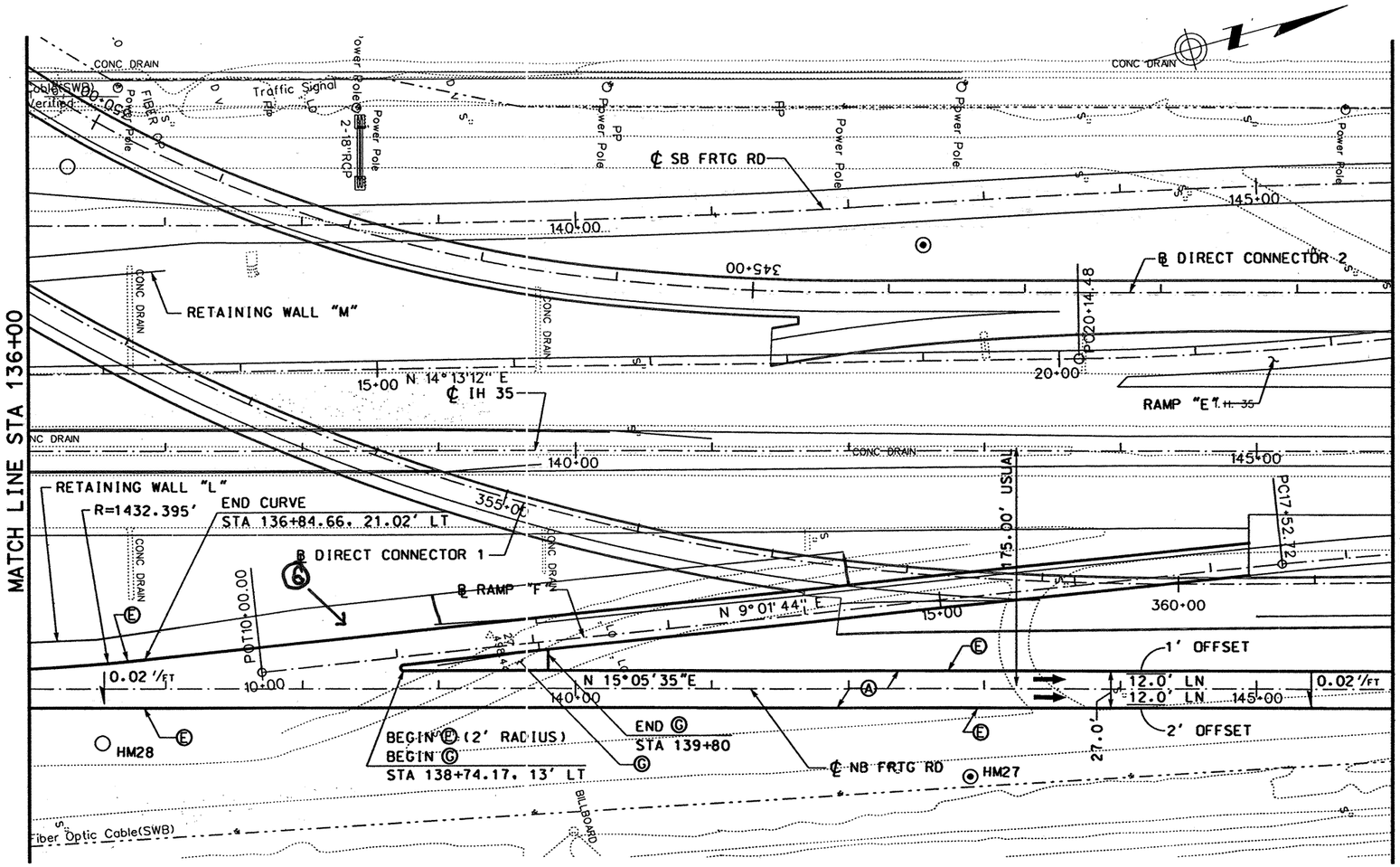

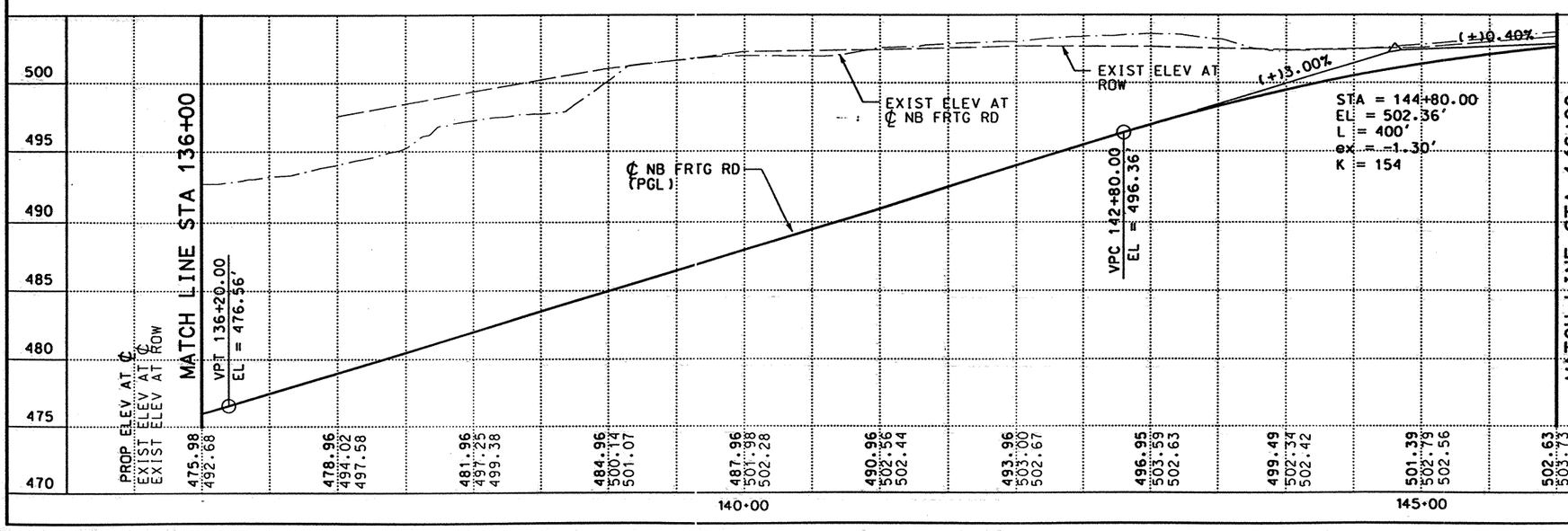

LEGEND:

- Ⓐ CONC PAV (CONT REINF HY STL)(12")
- Ⓑ ASPH CONC PAV (TY A)(4")
- Ⓒ LIME TREATED SUBGRADE (8")
- Ⓓ SINGLE SLOPE CONCRETE BARRIER (SSCB) (TYPE 2)
- Ⓔ TYPE II MONO CURB (6")
- Ⓕ CELL FIBER MULCH SEED (PERM) (RURAL)(CLAY)
- Ⓖ CLASS B RIPRAP (4")
- Ⓗ CONC SIDEWALK (4")
- Ⓘ CONC MEDIAN (6")
- Ⓙ SINGLE SLOPE TRAFFIC RAIL(SSTR) w/ DRAIN SLOTS
- Ⓚ RETAINING WALL
- Ⓛ METAL BEAM GUARD FENCE
- Ⓜ BRICK PAVERS
- Ⓝ REMOVE ASPH CONC PAV
- Ⓞ REMOVE CONC PAV
- Ⓟ TYPE II CURB AND GUTTER (6")
- Ⓠ CONCRETE DRIVEWAYS (6")
- Ⓡ ASPH CONC PAV (TY D)(2")
- Ⓢ ASPH CONC PAV (TY A)(8")
- Ⓣ PLANE ASPH CONC PAV (0 - 1")
- Ⓤ SINGLE SLOPE TRAFFIC RAIL (SSTR)
- Ⓥ CHAINLINK FENCE (6')
- Ⓦ ROADWAY UNDERDRAIN
- Ⓧ WHEELCHAIR RAMP TYPE B

NOTES:

1. SEE "GEOMETRIC DATA SUMMARY" FOR ALIGNMENT DATA.
2. SEE "DIRECT CONNECTOR 1 PLAN & PROFILE" FOR DETAILS.
3. SEE "RAMP "F" PLAN & PROFILE" FOR DETAILS.
4. SEE "REMOVAL LAYOUT" FOR MORE DETAILS.

STATE OF TEXAS
DERRON S. VINCIK
84028
REGISTERED PROFESSIONAL ENGINEER

The seal appearing on this document was authorized by Daniel Saucedo P.E. 84028, on April 2, 1999.

Derron S. Vincik

DATE	BY	REV	REVISION

© 1999 Texas Department of Transportation

Brown & Root
HOUSTON, TEXAS

IH 35
NORTHBOUND FRONTAGE ROAD

PLAN AND PROFILE
STA 136+00 TO STA 146+00

0 50 100
SCALE: 1"=100' HORZ
1"=10' VERT

SHEET 3 OF 6

FED RD DIV NO	STATE PROJECT NO	SHEET NO
6	NH-99(462)	297

STATE	STATE DIST NO	COUNTY
TEXAS	22	WEBB

CONT	SECT	JOB	HIGHWAY NO
0018	06	131	IH 35

J01LOX01.PRO, PRO LV ON = 1-63
J01LOX01.UTI, UTI LV ON = 1-63
J01LOX01.ILL, ILL LV ON = 19
J01LOX01.FND, FND LV ON = 35
J01LOX01.DRN, DRN LV ON = 8
REF FILE(S): J01LOX01

J01LOX01.BCK, BCK LV ON = 1-30
J01LOX01.EOP, EOP LV ON = 1-11,13-17,19-27,29-41,43-53,5
J01LOX01.EOP, ALG LV ON = 1-44
J01LOX01.BDR, BDR LV ON = 5,10,35,45,46,57,60-62
REF FILE(S): J01LOX01

D03FNX06.DGN-09 03-07-99 BAR_HO_ES05 \HCIVIL\CF0039\PHASE2

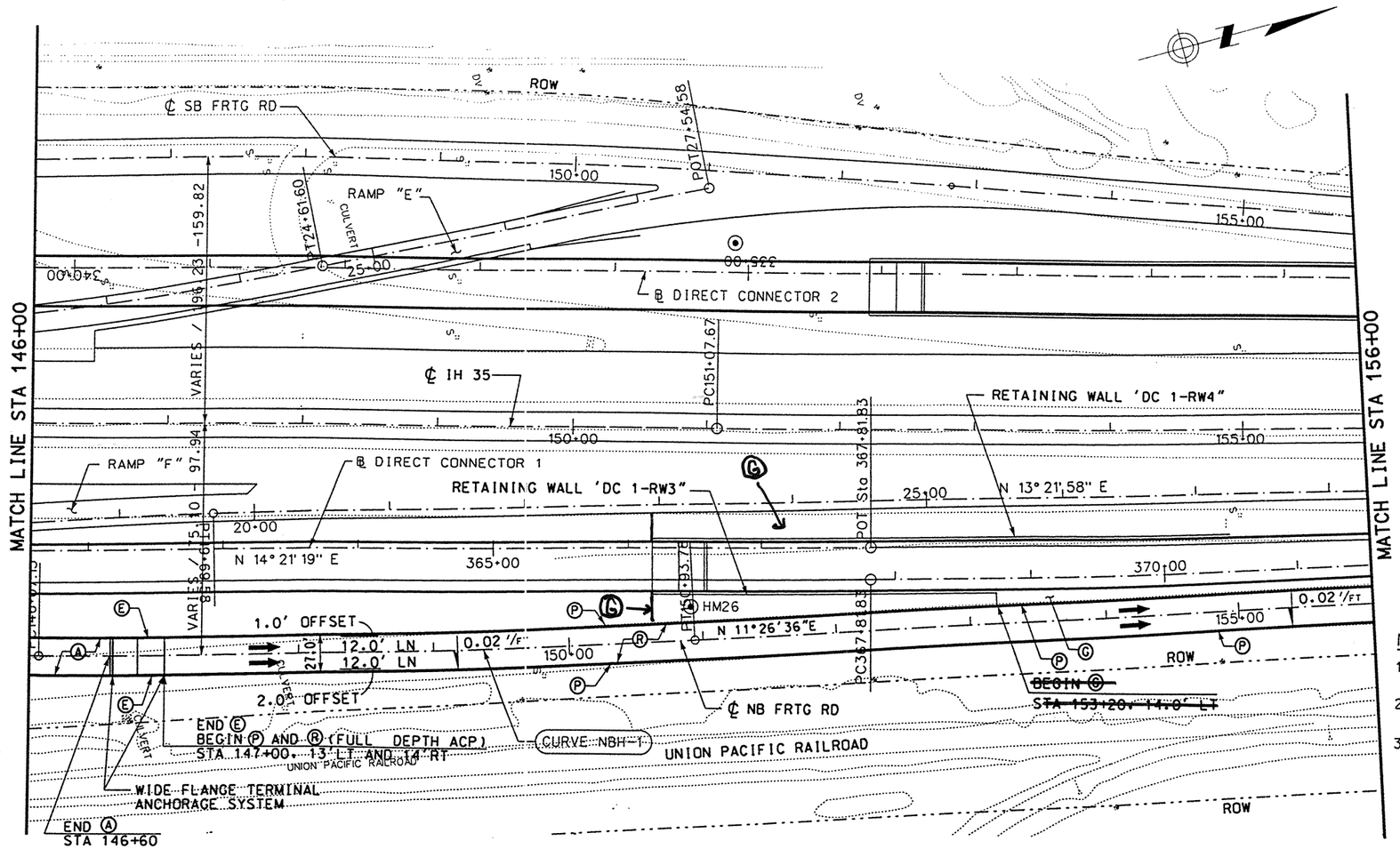

LEGEND:

- Ⓐ CONC PAV (CONT REINF HY STL)(12")
- Ⓑ ASPH CONC PAV (TY A)(4")
- Ⓒ LIME TREATED SUBGRADE (8")
- Ⓓ SINGLE SLOPE CONCRETE BARRIER (SSCB) (TYPE 2)
- Ⓔ TYPE II MONO CURB (6")
- Ⓕ CELL FIBER MULCH SEED (PERM) (RURAL)(CLAY)
- Ⓖ CLASS B RIPRAP (4")
- Ⓗ CONC SIDEWALK (4")
- Ⓘ CONC MEDIAN (6")
- Ⓙ SINGLE SLOPE TRAFFIC RAIL(SSTR) w/ DRAIN SLOTS
- Ⓚ RETAINING WALL
- Ⓛ METAL BEAM GUARD FENCE
- Ⓜ BRICK PAVERS
- Ⓝ REMOVE ASPH CONC PAV
- Ⓞ REMOVE CONC PAV
- Ⓟ TYPE II CURB AND GUTTER (6")
- Ⓠ CONCRETE DRIVEWAYS (6")
- Ⓡ ASPH CONC PAV (TY D)(2")
- Ⓢ ASPH CONC PAV (TY A)(8")
- Ⓣ PLANE ASPH CONC PAV (0 - 1")
- Ⓤ SINGLE SLOPE TRAFFIC RAIL (SSTR)
- Ⓥ CHAINLINK FENCE (6')
- Ⓦ ROADWAY UNDERDRAIN
- Ⓧ WHEELCHAIR RAMP TYPE B

NOTES:

1. SEE "GEOMETRIC DATA SUMMARY" FOR ALIGNMENT DATA.
2. SEE "DIRECT CONNECTOR 1 PLAN & PROFILE" FOR DETAILS.
3. SEE "REMOVAL LAYOUT" FOR MORE DETAILS.

STATE OF TEXAS
DERRON S. VINCIK
84028
REGISTERED PROFESSIONAL ENGINEER

The seal appearing on this document was authorized by Derron S. Vincik P.E. 84028, on June 3, 1999.

Derron S. Vincik

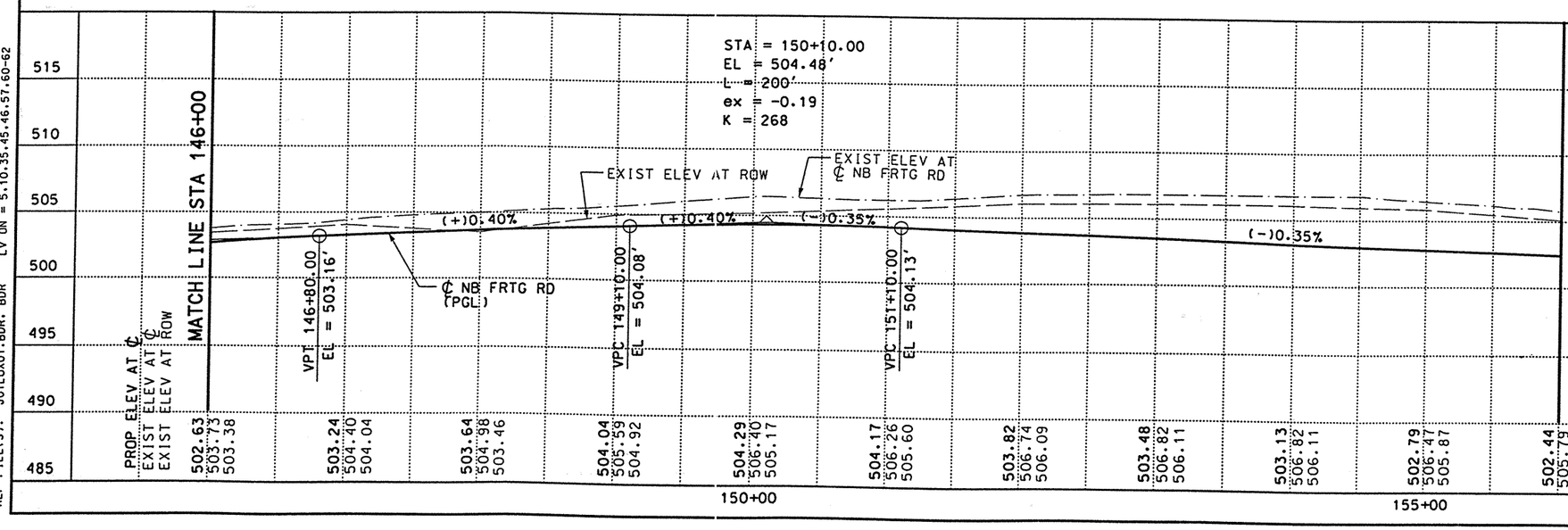

REV. 6-25-99

DATE	BY	REV	REVISION
6/3/99	DV	01	WIDE FLANGE TERMINAL ANCHORAGE SYSTEM

© 1999 Texas Department of Transportation

Brown & Root
HOUSTON, TEXAS

IH 35
NORTHBOUND FRONTAGE ROAD

PLAN AND PROFILE
STA 146+00 TO STA 156+00

0 50 100
SCALE: 1"=100' HORZ
1"=10' VERT

SHEET 4 OF 6

FED RD DIV NO	STATE PROJECT NO	SHEET NO
6	NH-99(462)	288

STATE	STATE DIST NO	COUNTY
TEXAS	22	WEBB

CONT	SECT	JOB	HIGHWAY NO
0018	06	131	IH 35

REF FILE(S): J01LOX01.PRO, PRO LV ON = 1-63
J01LOX01.UTI, UTI LV ON = 1-63
J01LOX01.ILL, ILL LV ON = 19
J01LOX01.FND, FND LV ON = 35
J01LOX01.DRN, DRN LV ON = 8

REF FILE(S): J01LOX01.BCK, BCK LV ON = 1-30
J01LOX01.EOP, EOP LV ON = 1-11,13-17,19-27,29-41,43-53,5
J01LOX01.EOP, ALG LV ON = 1-44
J01LOX01.BDR, BDR LV ON = 5,10,35,45,46,57,60-62

D03FNX07.DGN-09 04-28-99 BAR_HO_ES05 \HCIVIL\CF0039\PHASE2

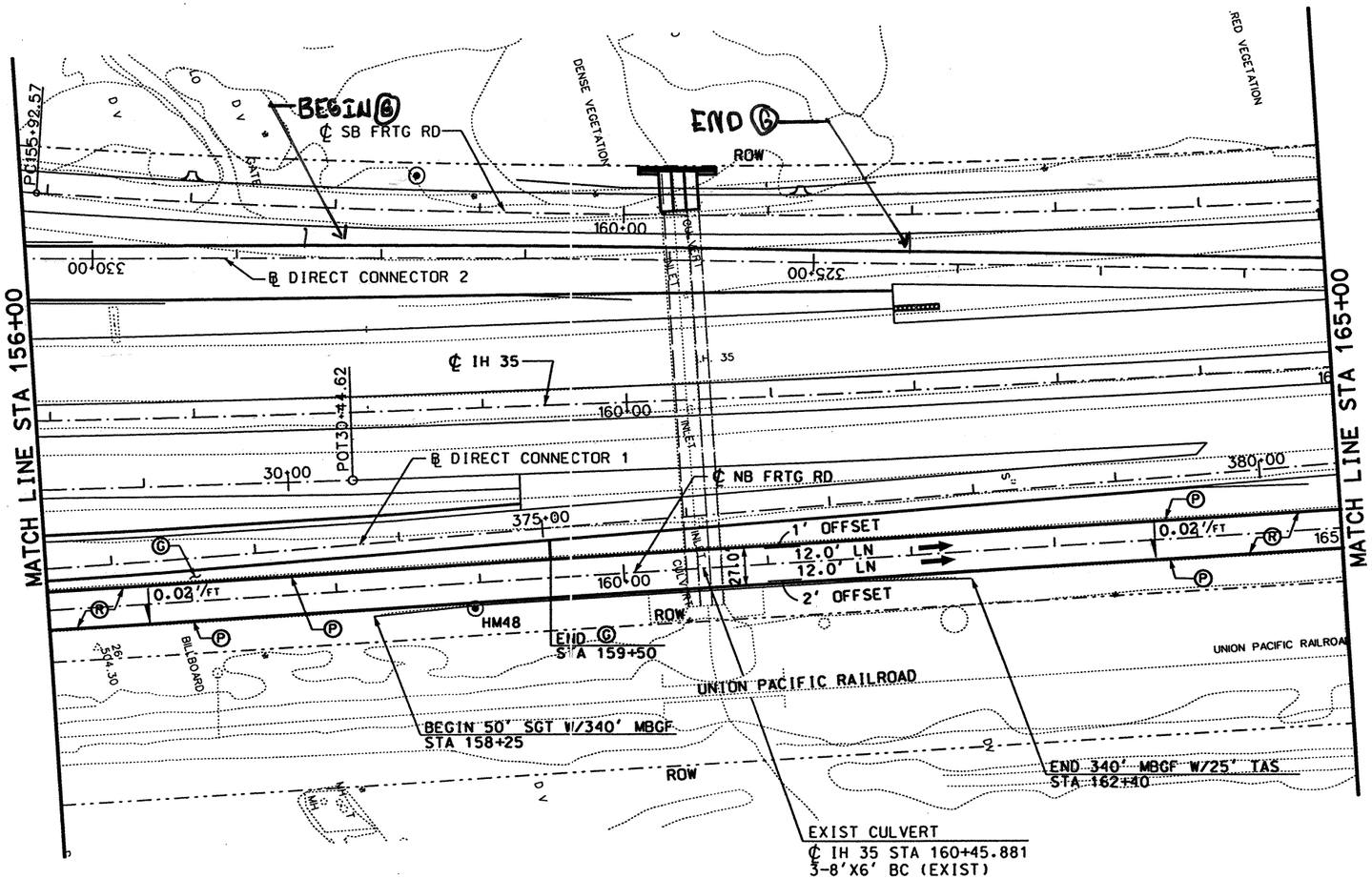

LEGEND:

- Ⓐ CONC PAV (CONT REINF HY STL)(12")
- Ⓑ ASPH CONC PAV (TY A)(4")
- Ⓒ LIME TREATED SUBGRADE (8")
- Ⓓ SINGLE SLOPE CONCRETE BARRIER (SSCB) (TYPE 2)
- Ⓔ TYPE II MONO CURB (6")
- Ⓕ CELL FIBER MULCH SEED (PERM) (RURAL)(CLAY)
- Ⓖ CLASS B RIPRAP (4")
- Ⓗ CONC SIDEWALK (4")
- Ⓘ CONC MEDIAN (6")
- Ⓙ SINGLE SLOPE TRAFFIC RAIL(SSTR) w/ DRAIN SLOTS
- Ⓚ RETAINING WALL
- Ⓛ METAL BEAM GUARD FENCE
- Ⓜ BRICK PAVERS
- Ⓝ REMOVE ASPH CONC PAV
- Ⓞ REMOVE CONC PAV
- Ⓟ TYPE II CURB AND GUTTER (6")
- Ⓠ CONCRETE DRIVEWAYS (6")
- Ⓡ ASPH CONC PAV (TY D)(2")
- Ⓢ ASPH CONC PAV (TY A)(8")
- Ⓣ PLANE ASPH CONC PAV (0 - 1")
- Ⓤ SINGLE SLOPE TRAFFIC RAIL (SSTR)
- Ⓥ CHAINLINK FENCE (6')
- Ⓦ ROADWAY UNDERDRAIN
- Ⓧ WHEELCHAIR RAMP TYPE B

NOTES:

1. SEE "GEOMETRIC DATA SUMMARY" FOR ALIGNMENT DATA.
2. SEE "DIRECT CONNECTOR 1 PLAN & PROFILE" FOR DETAILS.
3. SEE "REMOVAL LAYOUT" FOR MORE DETAILS.
4. SEE CULVERT LAYOUT FOR MORE DETAILS.

STATE OF TEXAS
DERRON S. VINCIK
84028
REGISTERED PROFESSIONAL ENGINEER

The seal appearing on this document was authorized by Derron S. Vincik P.E. 84028, on April 9, 1999.

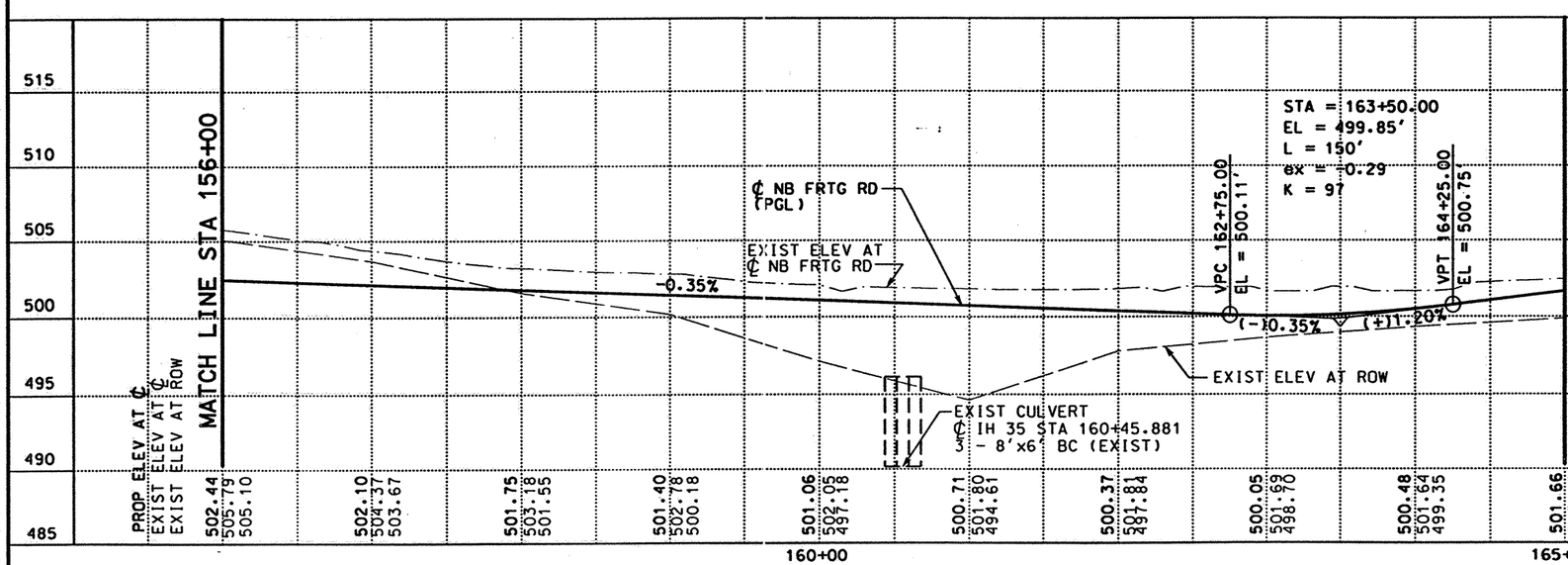

DATE	BY	REV	REVISION

© 1999

Texas Department of Transportation

Brown & Root
HOUSTON, TEXAS

IH 35
NORTHBOUND FRONTAGE ROAD

PLAN AND PROFILE
STA 156+00 TO STA 165+00

0 50 100
SCALE: 1"=100' HORIZ
1"=10' VERT

SHEET 5 OF 6

FED RD DIV NO	STATE PROJECT NO	SHEET NO
6	NH-99(462)	209

STATE	STATE DIST NO	COUNTY
TEXAS	22	WEBB

CONT	SECT	JOB	HIGHWAY NO
0018	06	131	IH 35

REF FILE(S): J01LDX01.PRO, PRO LV ON = 1-63
J01LDX01.UT1, UT1 LV ON = 1-63
J01LDX01.ILL, ILL LV ON = 20
J01LDX01.FND, FND LV ON = 35
J01LDX01.DRN, DRN LV ON = 8

REF FILE(S): J01LDX01.BCK, BCK LV ON = 1-30
J01LDX01.EOP, EOP LV ON = 1-11,13-17,19-27,29-41,43-53,5
J01LDX01.EOP, ALG LV ON = 1-44
J01LDX01.BDR, BDR LV ON = 5,10,35,45,46,57,60-62

D03FNX08.DGN-08 03-09-99 BAR_HO_ES05 \HCIVIL\CF0039\PHASE2

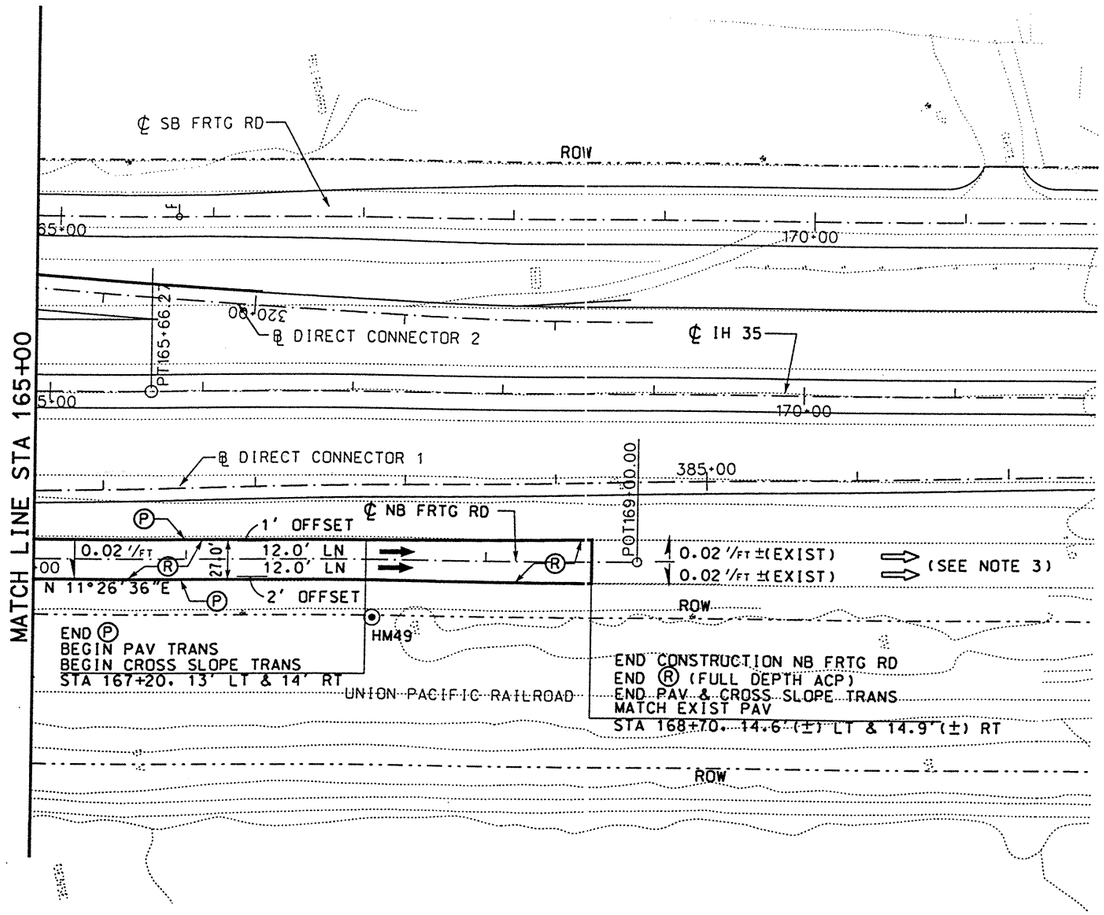

LEGEND:

- Ⓐ CONC PAV (CONT REINF HY STL)(12")
- Ⓑ ASPH CONC PAV (TY A)(4")
- Ⓒ LIME TREATED SUBGRADE (8")
- Ⓓ SINGLE SLOPE CONCRETE BARRIER (SSCB) (TYPE 2)
- Ⓔ TYPE II MONO CURB (6")
- Ⓕ CELL FIBER MULCH SEED (PERM) (RURAL)(CLAY)
- Ⓖ CLASS B RIPRAP (4")
- Ⓗ CONC SIDEWALK (4")
- Ⓘ CONC MEDIAN (6")
- Ⓙ SINGLE SLOPE TRAFFIC RAIL(SSTR) w/ DRAIN SLOTS
- Ⓚ RETAINING WALL
- Ⓛ METAL BEAM GUARD FENCE
- Ⓜ BRICK PAVERS
- Ⓝ REMOVE ASPH CONC PAV
- Ⓞ REMOVE CONC PAV
- Ⓟ TYPE II CURB AND GUTTER (6")
- Ⓠ CONCRETE DRIVEWAYS (6")
- Ⓡ ASPH CONC PAV (TY D)(2")
- Ⓢ ASPH CONC PAV (TY A)(8")
- Ⓣ PLANE ASPH CONC PAV (0 - 1")
- Ⓤ SINGLE SLOPE TRAFFIC RAIL (SSTR)
- Ⓥ CHAINLINK FENCE (6')
- Ⓦ ROADWAY UNDERDRAIN
- Ⓧ WHEELCHAIR RAMP TYPE B

NOTES:

1. SEE "GEOMETRIC DATA SUMMARY" FOR ALIGNMENT DATA.
2. SEE "REMOVAL LAYOUT" FOR MORE DETAILS.
3. THE EXISTING, EAST IH35 FRONTAGE ROAD WILL BE RE-STRIPED, BY OTHERS, TO ACCOMMODATE ONE-WAY TRAFFIC, PRIOR TO THE CONSTRUCTION OF THE PROPOSED IH 35 NORTHBOUND FRONTAGE ROAD.

STATE OF TEXAS
DERRON S. VINCIK
84028
REGISTERED PROFESSIONAL ENGINEER

The seal appearing on this document was authorized by Derron S. Vincik P.E. 84028, on June 3, 1999.

Derron S. Vincik

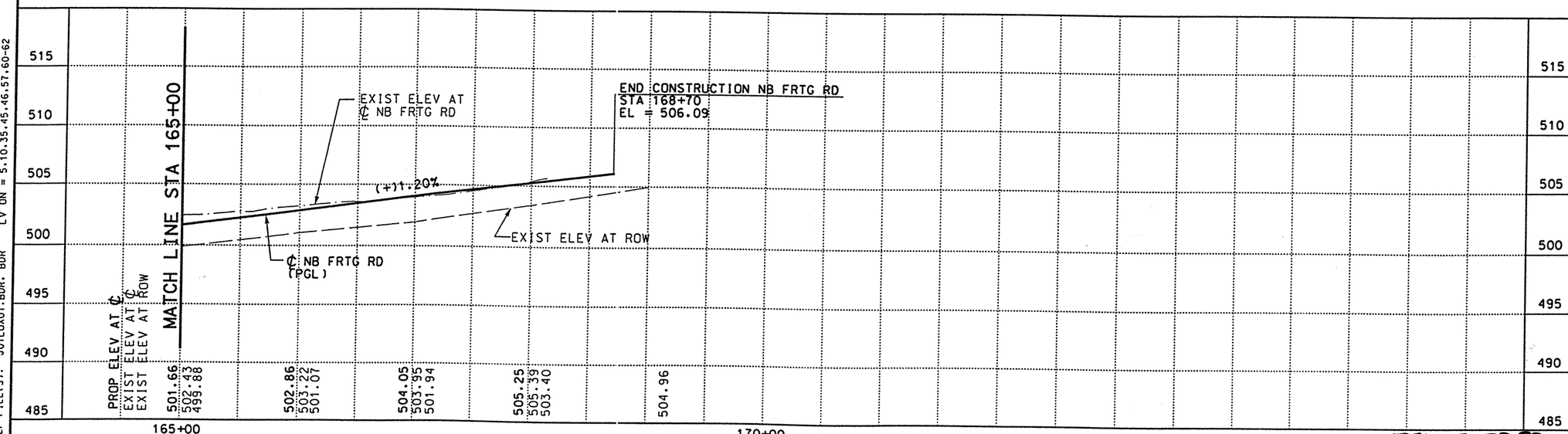

REV. 6-25-99

DATE	BY	REV	REVISION
6/3/99	DV	01	NOTES

© 1999 Texas Department of Transportation

Brown & Root
HOUSTON, TEXAS

IH 35
NORTHBOUND FRONTAGE ROAD

PLAN AND PROFILE
STA 165+00 TO END

0 50 100
SCALE: 1"=100' HORZ
1"=10' VERT

SHEET 6 OF 6

FED RD DIV NO	STATE PROJECT NO	SHEET NO
6	NH-99(462)	290

STATE	STATE DIST NO	COUNTY
TEXAS	22	WEBB

CONT	SECT	JOB	HIGHWAY NO
0018	06	131	IH 35

REF FILE(S): J01LOX01.PRO, PRO LV ON = 1-63
J01LOX01.UTI, UTI LV ON = 1-63
J01LOX01.ILL, ILL LV ON = 20
J01LOX01.FND, FND LV ON = 35
J01LOX01.DRN, DRN LV ON = 8

REF FILE(S): J01LOX01.BCK, BCK LV ON = 1-30
J01LOX01.EOP, EOP LV ON = 1-11,13-17,19-27,29-41,43-53,5
J01LOX01.EOP, ALG LV ON = 1-44
J01LOX01.BDR, BDR LV ON = 5,10,35,45,46,57,60-62

DO3FNX09.DGN-06 06-02-99 BAR_HO_ES05 \HCIVIL\CF0039\PHASE2

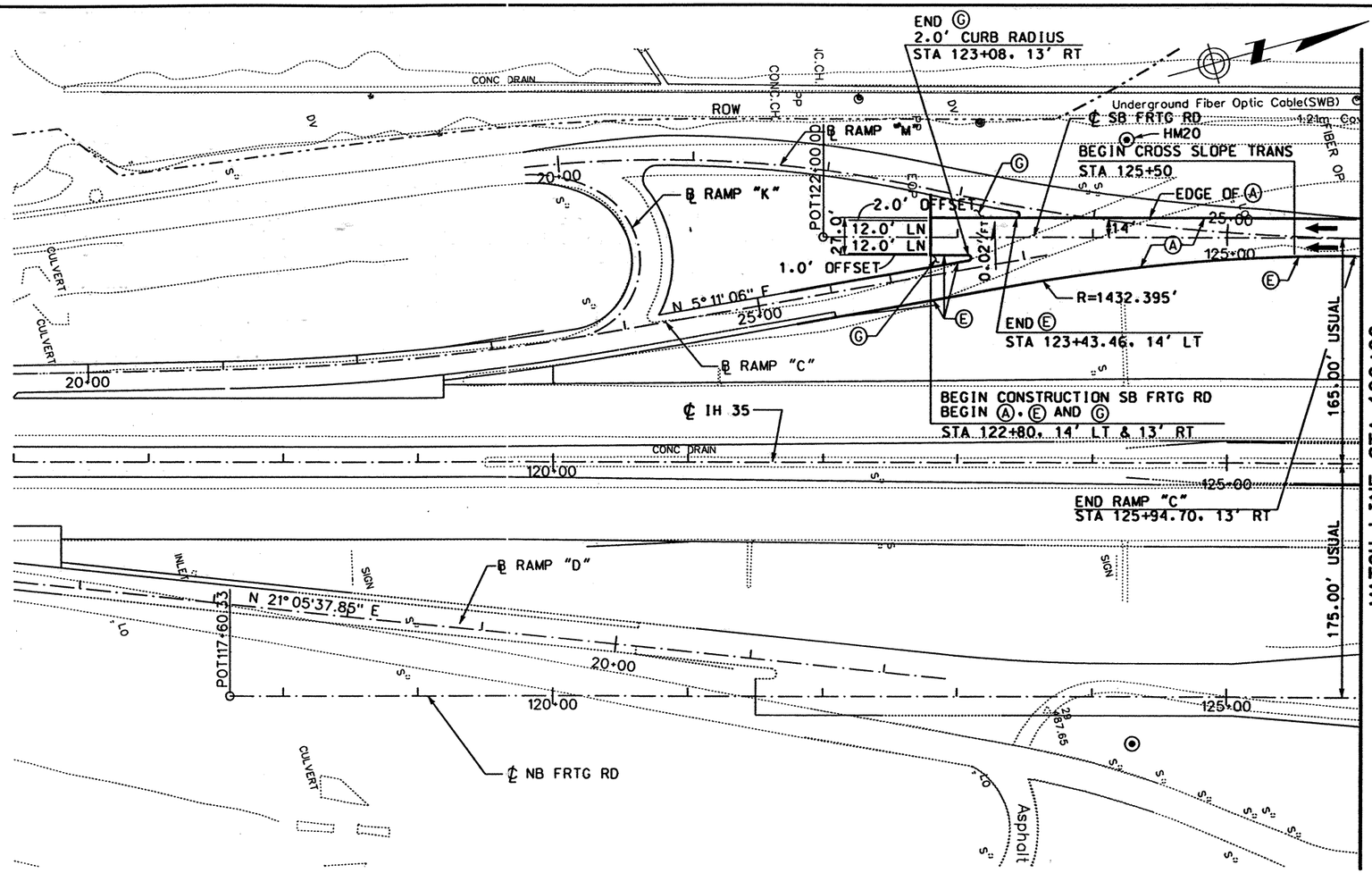

LEGEND:

- Ⓐ CONC PAV (CONT REINF HY STL)(12")
- Ⓑ ASPH CONC PAV (TY A)(4")
- Ⓒ LIME TREATED SUBGRADE (8")
- Ⓓ SINGLE SLOPE CONCRETE BARRIER (SSCB) (TYPE 2)
- Ⓔ TYPE II MONO CURB (6")
- Ⓕ CELL FIBER MULCH SEED (PERM) (RURAL)(CLAY)
- Ⓖ CLASS B RIPRAP (4")
- Ⓗ CONC SIDEWALK (4")
- Ⓘ CONC MEDIAN (6")
- Ⓙ SINGLE SLOPE TRAFFIC RAIL(SSTR) w/ DRAIN SLOTS
- Ⓚ RETAINING WALL
- Ⓛ METAL BEAM GUARD FENCE
- Ⓜ BRICK PAVERS
- Ⓝ REMOVE ASPH CONC PAV
- Ⓞ REMOVE CONC PAV
- Ⓟ TYPE II CURB AND GUTTER (6")
- Ⓠ CONCRETE DRIVEWAYS (6")
- Ⓡ ASPH CONC PAV (TY D)(2")
- Ⓢ ASPH CONC PAV (TY A)(8")
- Ⓣ PLANE ASPH CONC PAV (0 - 1")
- Ⓤ SINGLE SLOPE TRAFFIC RAIL (SSTR)
- Ⓥ CHAINLINK FENCE (6')
- Ⓦ ROADWAY UNDERDRAIN
- Ⓧ WHEELCHAIR RAMP TYPE B

NOTES:

1. SEE "GEOMETRIC DATA SUMMARY" FOR ALIGNMENT DATA.
2. SEE "RAMP C PLAN AND PROFILE" FOR MORE DETAILS.
3. SEE "RAMP M PLAN AND PROFILE" FOR MORE DETAILS.
4. SEE "REMOVAL LAYOUT" FOR MORE DETAILS.

STATE OF TEXAS
DERRON S. VINCIK
84028
REGISTERED PROFESSIONAL ENGINEER

The seal appearing on this document was authorized by Derron S. Vincik P.E. 84028, on April 20, 1999.

Derron S. Vincik

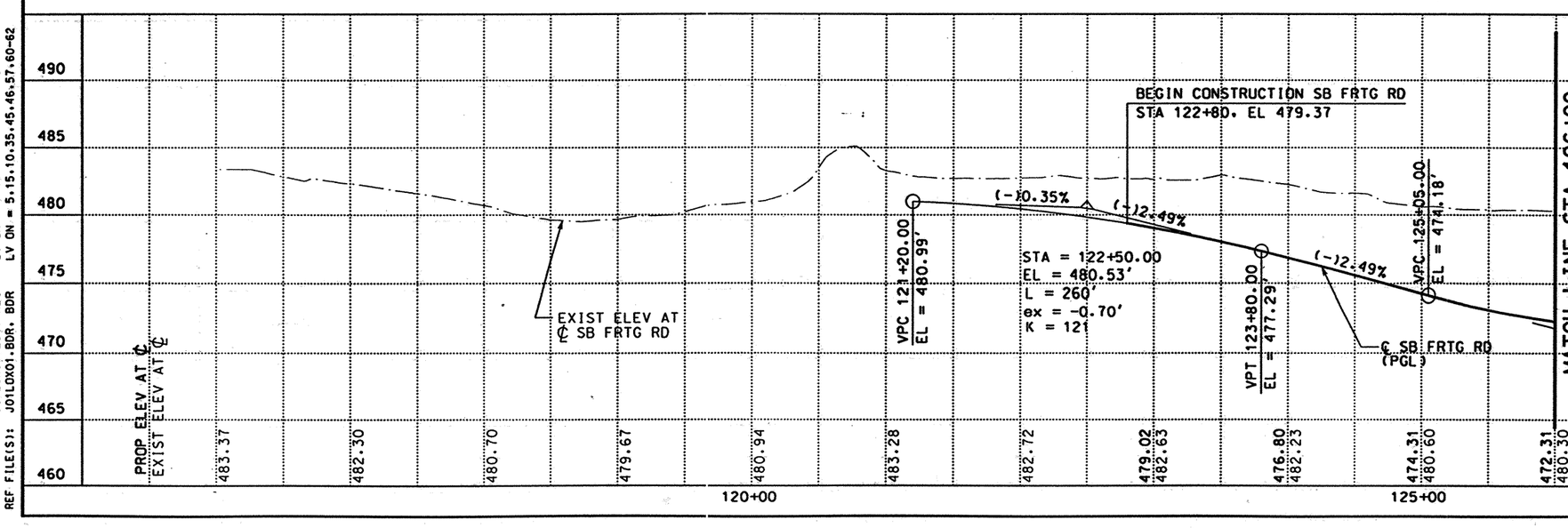

DATE	BY	REV	REVISION

© 1999 Texas Department of Transportation

Brown & Root
HOUSTON, TEXAS

IH 35
SOUTHBOUND FRONTAGE ROAD

PLAN AND PROFILE
STA 122+00 TO STA 126+00

0 50 100
SCALE: 1"=100' HORIZ
1"=10' VERT

SHEET 1 OF 14

FED RD DIV NO	STATE PROJECT NO		SHEET NO
6	NH-99(462)		291
STATE	STATE DIST NO		COUNTY
TEXAS	22		WEBB
CONT	SECT	JOB	HIGHWAY NO
0018	06	131	IH 35

REF FILE(S): J01LDX01.PRO, J01LDX01.UTI, J01LDX01.ILL, J01LDX01.FND, J01LDX01.DRN, J01LDX01.BCK, J01LDX01.EOP, J01LDX01.EOP, J01LDX01.ALG, J01LDX01.BDR

LV ON = 1-63, LV ON = 1-63, LV ON = 20, LV ON = 35, LV ON = 8, LV ON = 1-30, LV ON = 1-11,13-17,19-27,29-41,43-53,5, LV ON = 1-44, LV ON = 5,15,10,35,45,46,57,60-62

03-08-99 BAR_HO_ES05 \HCIVIL\CF0039\PHASE2 D03FSX04.DGN-09

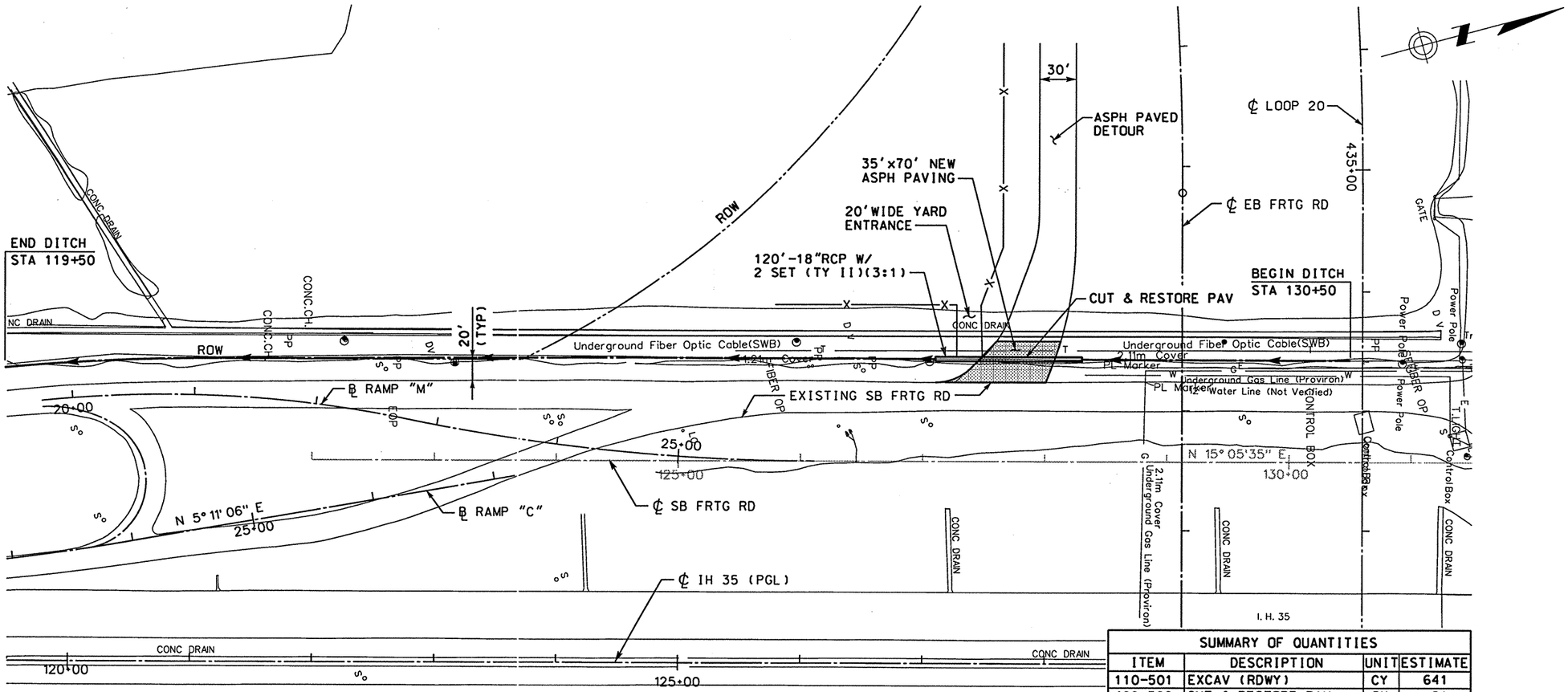

SUMMARY OF QUANTITIES			
ITEM	DESCRIPTION	UNIT	ESTIMATE
110-501	EXCAV (RDWY)	CY	641
400-508	CUT & RESTORE PAV	SY	21
464-519	RCP PIPE (CL IV)	LF	120
467-0673	SAFE END TRT (TY II) (18 IN)(RCP)(3:1)	EA	2
3116-501	HOT MIX (TY A)(6 IN)	TON	90
3116-504	HOT MIX (TY D)(2 IN)	TON	30

STATE OF TEXAS
RUDY L. GOMEZ
58664
REGISTERED PROFESSIONAL ENGINEER

The seal appearing on this document was authorized by Rudy L. Gomez P.E. 58664, on April 11, 2001.

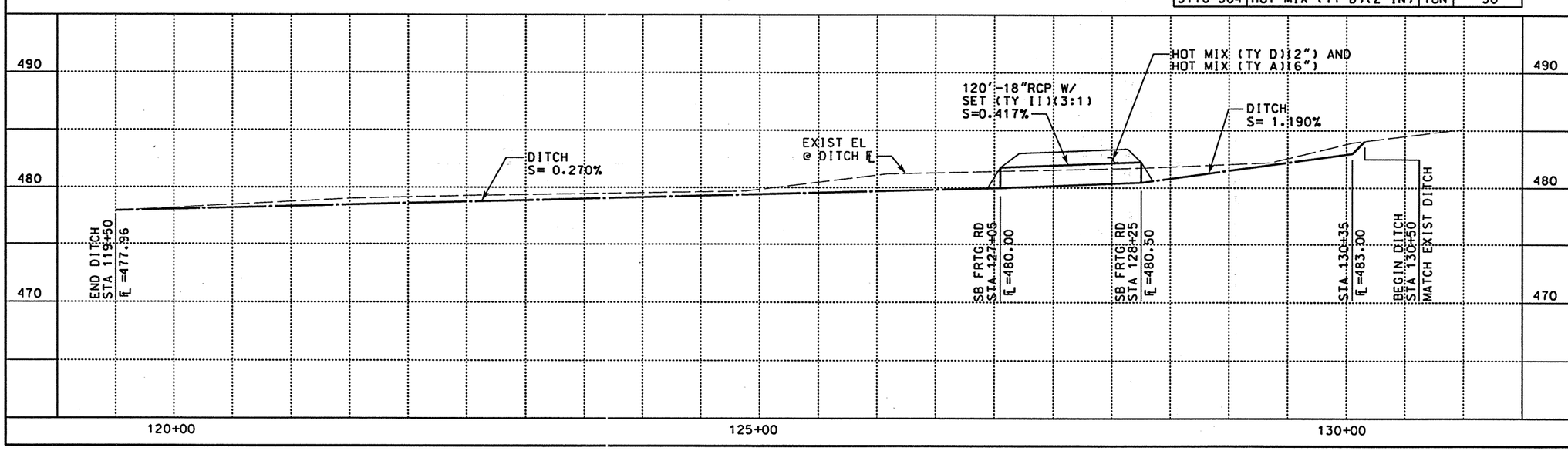

DATE	BY	REV	REVISION

© 1999 Texas Department of Transportation

Brown & Root
HOUSTON, TEXAS

IH 35

SB FRONTAGE ROAD
TEMPORARY DETOUR

291A

SHEET 1 OF 1

FED RD DIV NO	STATE PROJECT NO		SHEET NO
6	NH-99(462)		
STATE	STATE DIST NO	COUNTY	
TEXAS	22	WEBB	
CONT	SECT	JOB	HIGHWAY NO
0018	06	131	IH 35

DETOUR01.DGN-05 04-11-01 BAR_HO_ES05 \HCIVIL\CF0039\PHASE2

EPHASE.EOP. EEOP LV ON = 1-63
JO1LOX01.UTI. UTI LV ON = 1-37.39-63
MILOINT.ROW. ROW LV ON = 1-63

JO1LOX01.BCK. BCK LV ON = 1-30
JO1LOX01.EOP. EOP LV ON = OFF
JO1LOX01.ALG. ALG LV ON = 1-8.10.11.13.15.16.18-24.23-39.45-49
JO1LOX01.BDR. BDR LV ON = 10.11.47.57.58.60-62

REF FILE(S):

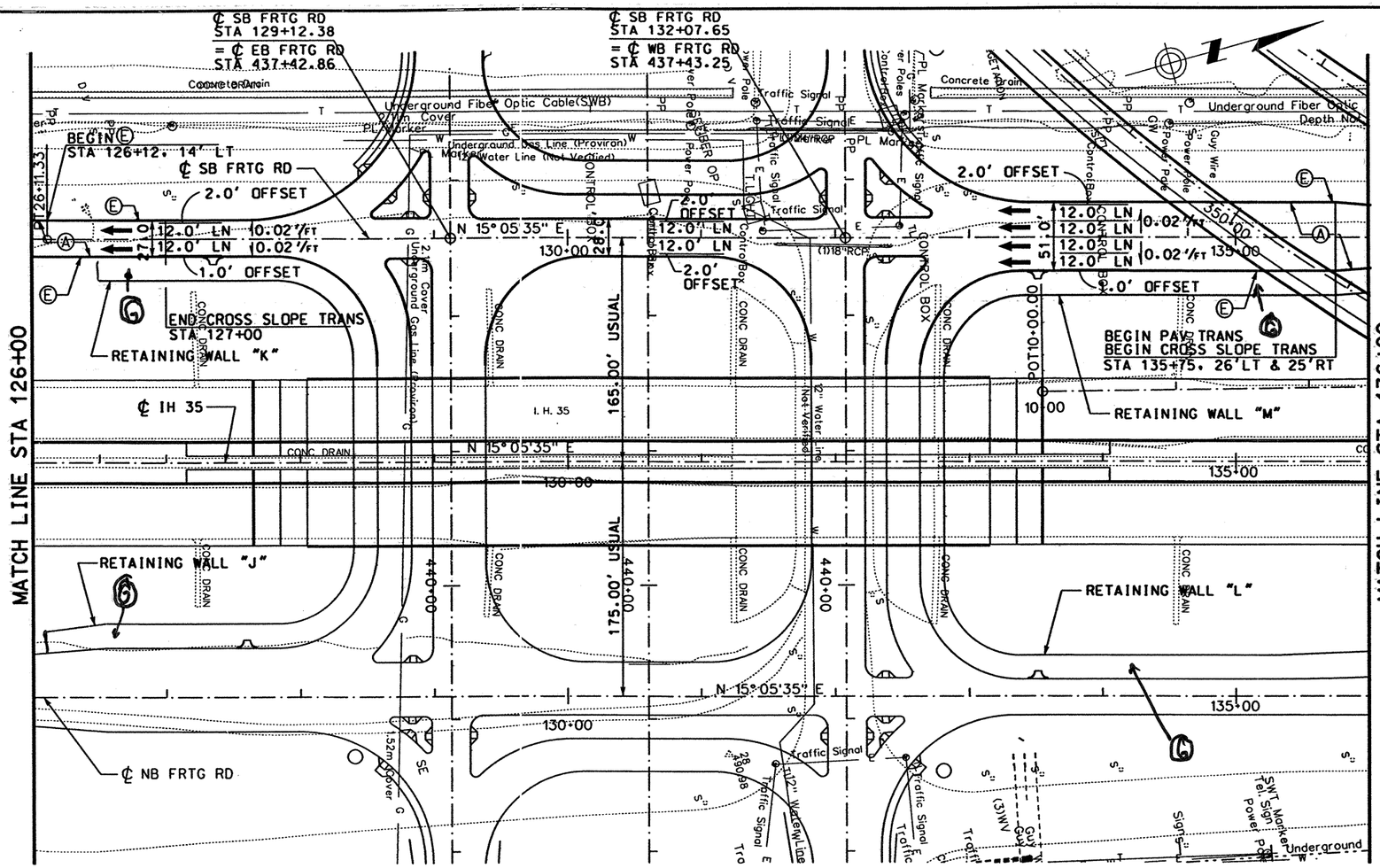

LEGEND:

- Ⓐ CONC PAV (CONT REINF HY STL)(12")
- Ⓑ ASPH CONC PAV (TY A)(4")
- Ⓒ LIME TREATED SUBGRADE (8")
- Ⓓ SINGLE SLOPE CONCRETE BARRIER (SSCB) (TYPE 2)
- Ⓔ TYPE II MONO CURB (6")
- Ⓕ CELL FIBER MULCH SEED (PERM) (RURAL)(CLAY)
- Ⓖ CLASS B RIPRAP (4")
- Ⓗ CONC SIDEWALK (4")
- Ⓘ CONC MEDIAN (6")
- Ⓙ SINGLE SLOPE TRAFFIC RAIL(SSTR) w/ DRAIN SLOTS
- Ⓚ RETAINING WALL
- Ⓛ METAL BEAM GUARD FENCE
- Ⓜ BRICK PAVERS
- Ⓝ REMOVE ASPH CONC PAV
- Ⓞ REMOVE CONC PAV
- Ⓟ TYPE II CURB AND GUTTER (6")
- Ⓠ CONCRETE DRIVEWAYS (6")
- Ⓡ ASPH CONC PAV (TY D)(2")
- Ⓢ ASPH CONC PAV (TY A)(8")
- Ⓣ PLANE ASPH CONC PAV (0 - 1")
- Ⓤ SINGLE SLOPE TRAFFIC RAIL (SSTR)
- Ⓥ CHAINLINK FENCE (6')
- Ⓦ ROADWAY UNDERDRAIN
- Ⓧ WHEELCHAIR RAMP TYPE B

NOTES:

1. SEE "GEOMETRIC DATA SUMMARY" FOR ALIGNMENT DATA.
2. SEE "DIRECT CONNECTOR 1 PLAN & PROFILE" FOR DETAILS.
3. SEE "LOOP 20 & IH35 INTERSECTION LAYOUT" FOR MORE DETAILS.
4. SEE "LOOP 20/IH 35 CONTOUR GRADING PLAN" FOR CROSS SLOPES AND ELEVATIONS WITHIN THE INTERSECTION.
5. SEE "REMOVAL LAYOUT" FOR MORE DETAILS.

STATE OF TEXAS
DERRON S. VINCIK
84028
REGISTERED PROFESSIONAL ENGINEER

The seal appearing on this document was authorized by Derron S. Vincik P.E. 84028, on April 2, 1999.

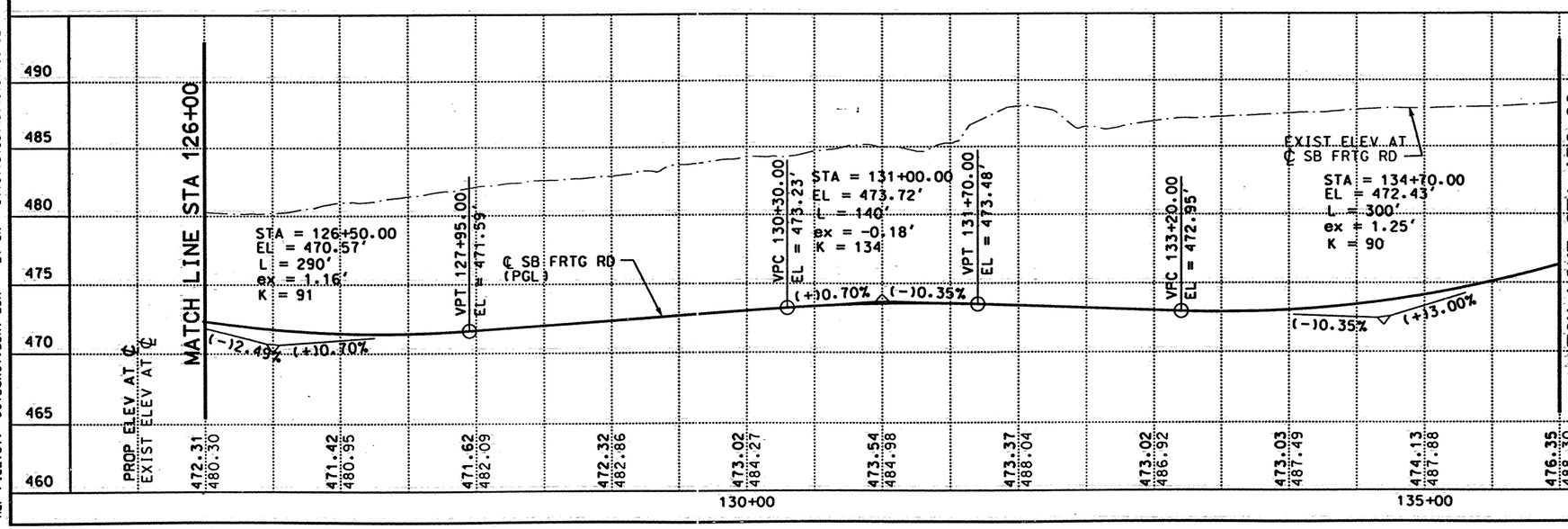

DATE	BY	REV	REVISION

© 1999 Texas Department of Transportation

Brown & Root
HOUSTON, TEXAS

IH 35
SOUTHBOUND FRONTAGE ROAD

PLAN AND PROFILE
STA 126+00 TO STA 136+00

0 50 100
SCALE: 1"=100' HORIZ
1"=10' VERT

SHEET 2 OF 14

FED RD DIV NO	STATE PROJECT NO		SHEET NO
6	NH-99(462)		292
STATE	STATE DIST NO		COUNTY
TEXAS	22		WEBB
CONT	SECT	JOB	HIGHWAY NO
0018	06	131	IH 35

REF FILE(S): J01LOX01.PRO, PRO LV ON = 1-63
J01LOX01.UTI, UTI LV ON = 1-63
J01LOX01.ILL, ILL LV ON = 20
J01LOX01.FND, FND LV ON = 35
J01LOX01.DRN, DRN LV ON = 8

REF FILE(S): J01LOX01.ROW, ROW LV ON = 1-20,22,23,25-61
J01LOX01.BCK, BCK LV ON = 1-30
J01LOX01.EOP, EOP LV ON = 1-11,13-17,19-27,29-41,43-53,5
J01LOX01.EOP, ALG LV ON = 1-44
J01LOX01.BDR, BDR LV ON = 5,10,15,35,45,46,57,60-62

D03FSX05.DGN-11 03-8-99 BAR_HO_ES05 \HCIVIL\CF0039\PHASE2

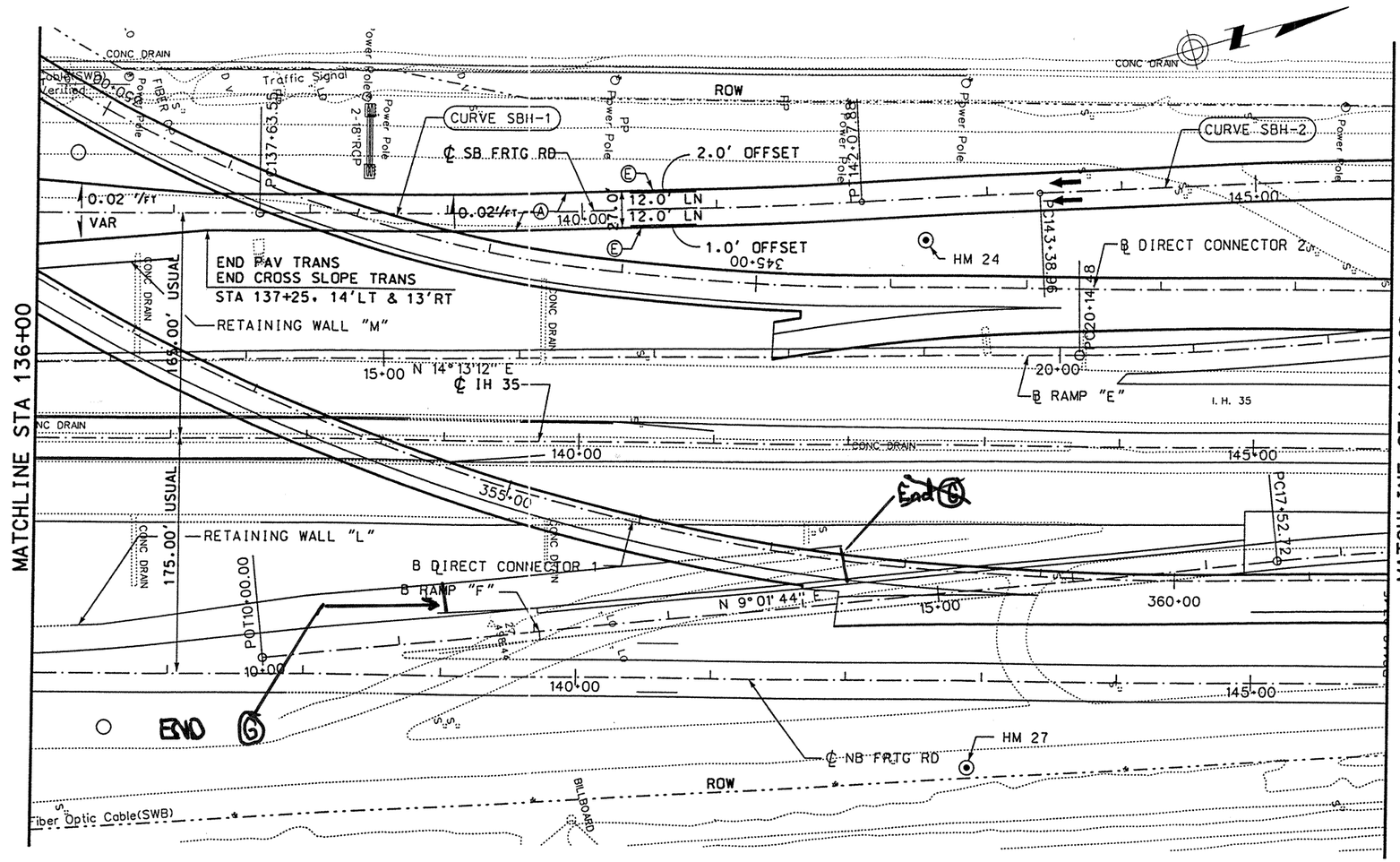

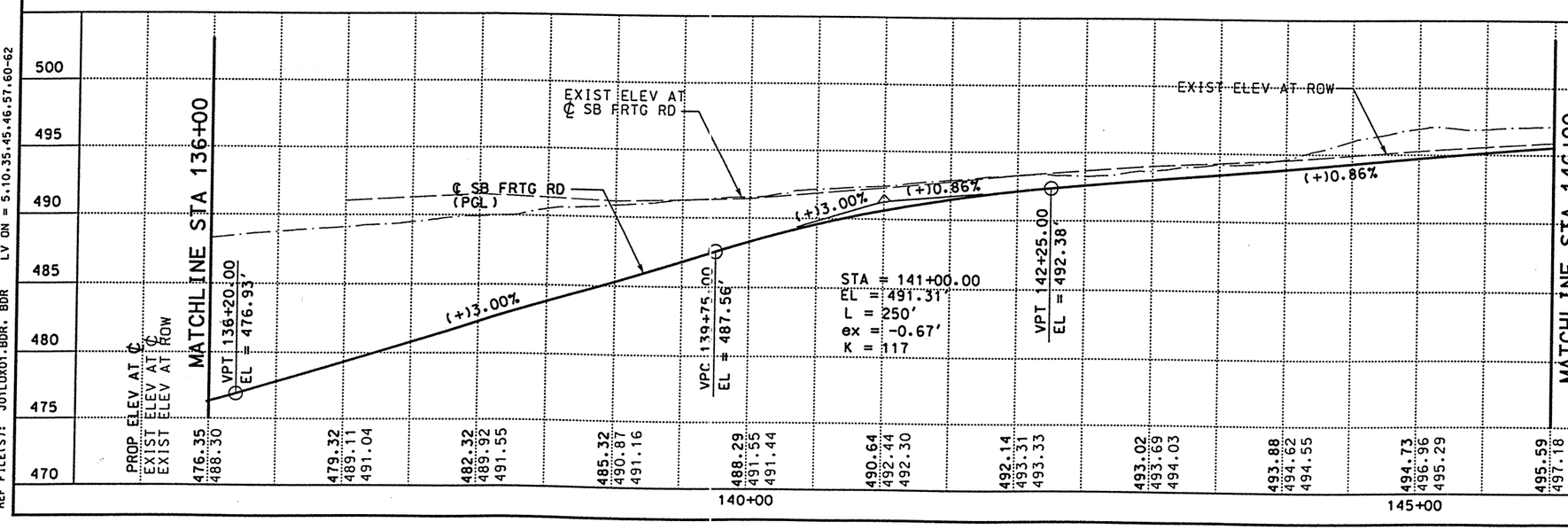

LEGEND:

- Ⓐ CONC PAV (CONT REINF HY STL)(12")
- Ⓑ ASPH CONC PAV (TY A)(4")
- Ⓒ LIME TREATED SUBGRADE (8")
- Ⓓ SINGLE SLOPE CONCRETE BARRIER (SSCB) (TYPE 2)
- Ⓔ TYPE II MONO CURB (6")
- Ⓕ CELL FIBER MULCH SEED (PERM) (RURAL)(CLAY)
- Ⓖ CLASS B RIPRAP (4")
- Ⓗ CONC SIDEWALK (4")
- Ⓘ CONC MEDIAN (6")
- Ⓙ SINGLE SLOPE TRAFFIC RAIL(SSTR) w/ DRAIN SLOTS
- Ⓚ RETAINING WALL
- Ⓛ METAL BEAM GUARD FENCE
- Ⓜ BRICK PAVERS
- Ⓝ REMOVE ASPH CONC PAV
- Ⓞ REMOVE CONC PAV
- Ⓟ TYPE II CURB AND GUTTER (6")
- Ⓠ CONCRETE DRIVEWAYS (6")
- Ⓡ ASPH CONC PAV (TY D)(2")
- Ⓢ ASPH CONC PAV (TY A)(8")
- Ⓣ PLANE ASPH CONC PAV (0 - 1")
- Ⓤ SINGLE SLOPE TRAFFIC RAIL (SSTR)
- Ⓥ CHAINLINK FENCE (6')
- Ⓦ ROADWAY UNDERDRAIN
- Ⓧ WHEELCHAIR RAMP TYPE B

NOTES:

1. SEE "GEOMETRIC DATA SUMMARY" FOR ALIGNMENT DATA.
2. SEE "DIRECT CONNECTOR 1 PLAN & PROFILE" FOR DETAILS.
3. SEE "DIRECT CONNECTOR 2 PLAN & PROFILE" FOR DETAILS.
4. SEE "REMOVAL LAYOUT" FOR MORE DETAILS.

STATE OF TEXAS
DERRON S. VINCIK
84028
REGISTERED PROFESSIONAL ENGINEER

The seal appearing on this document was authorized by Derron S. Vincik P.E. 84028, on June 3, 1999.

Derron S. Vincik

DATE	BY	REV	REVISION
6/3/99	DV	01	CALLOUT

© 1999 Texas Department of Transportation

Brown & Root
HOUSTON, TEXAS

IH 35
SOUTHBOUND FRONTAGE ROAD

PLAN AND PROFILE
STA 136+00 TO STA 146+00

0 50 100
SCALE: 1"=100' HORIZ
1"=10' VERT

SHEET 3 OF 14

FED RD DIV NO	STATE PROJECT NO		SHEET NO
6	NH-99(462)		293
STATE	STATE DIST NO	COUNTY	
TEXAS	22	WEBB	
CONT	SECT	JOB	HIGHWAY NO
0018	06	131	IH 35

REF FILE(S): JO1LOX01.PRO, PRO LV ON = 1-63
JO1LOX01.UTI, UTI LV ON = 1-63
JO1LOX01.ILL, ILL LV ON = 20
JO1LOX01.FND, FND LV ON = 35
JO1LOX01.DRN, DRN LV ON = 8

REF FILE(S): JO1LOX01.ROW, ROW LV ON = 1-23,25-61,63
JO1LOX01.BCK, BCK LV ON = 1-30
JO1LOX01.EQP, EQP LV ON = 1-11,13-17,19-27,29-41,43-53,5
JO1LOX01.EQP, ALG LV ON = 1-44
JO1LOX01.BDR, BDR LV ON = 5,10,35,45,46,57,60-62

D03FSX06.DGN-11 06-02-99 BAR_HO_ES05 \HCIVIL\CF0039\PHASE2

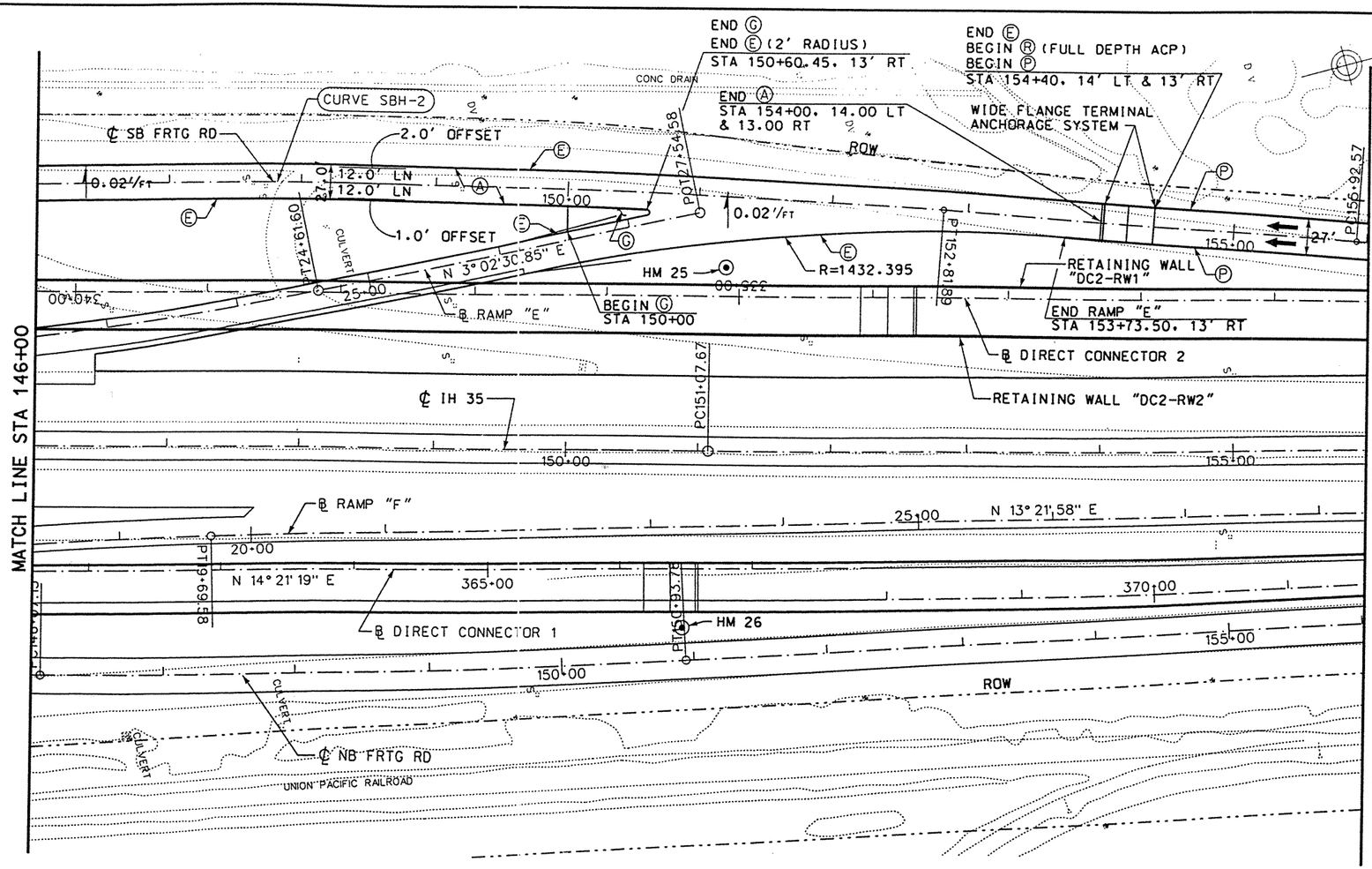

LEGEND:

- Ⓐ CONC PAV (CONT REINF HY STL)(12")
- Ⓑ ASPH CONC PAV (TY A)(4")
- Ⓒ LIME TREATED SUBGRADE (8")
- Ⓓ SINGLE SLOPE CONCRETE BARRIER (SSCB) (TYPE 2)
- Ⓔ TYPE II MONO CURB (6")
- Ⓕ CELL FIBER MULCH SEED (PERM) (RURAL)(CLAY)
- Ⓖ CLASS B RIPRAP (4")
- Ⓗ CONC SIDEWALK (4")
- Ⓘ CONC MEDIAN (6")
- Ⓙ SINGLE SLOPE TRAFFIC RAIL(SSTR) w/ DRAIN SLOTS
- Ⓚ RETAINING WALL
- Ⓛ METAL BEAM GUARD FENCE
- Ⓜ BRICK PAVERS
- Ⓝ REMOVE ASPH CONC PAV
- Ⓞ REMOVE CONC PAV
- Ⓟ TYPE II CURB AND GUTTER (6")
- Ⓠ CONCRETE DRIVEWAYS (6")
- Ⓡ ASPH CONC PAV (TY D)(2")
- Ⓢ ASPH CONC PAV (TY A)(8")
- Ⓣ PLANE ASPH CONC PAV (0 - 1")
- Ⓤ SINGLE SLOPE TRAFFIC RAIL (SSTR)
- Ⓥ CHAINLINK FENCE (6')
- Ⓦ ROADWAY UNDERDRAIN
- Ⓧ WHEELCHAIR RAMP TYPE B

NOTES:

1. SEE "GEOMETRIC DATA SUMMARY" FOR ALIGNMENT DATA.
2. SEE "RAMP E PLAN & PROFILE" FOR MORE DETAILS.
3. SEE "DIRECT CONNECTOR 2 PLAN & PROFILE" FOR DETAILS.
4. SEE "REMOVAL LAYOUT" FOR MORE DETAILS.

STATE OF TEXAS
DERRON S. VINCIK
84028
REGISTERED PROFESSIONAL ENGINEER

The seal appearing on this document was authorized by Derron S. Vincik P.E. 84028, on June 3, 1999.

Derron S. Vincik

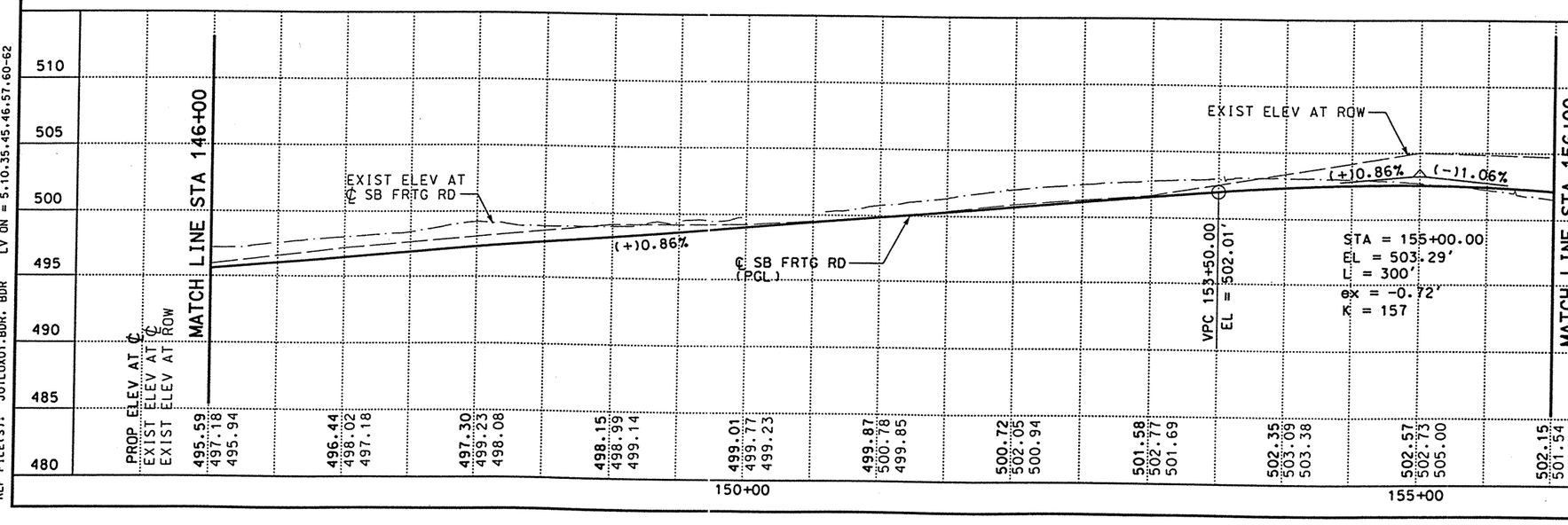

DATE	BY	REV	REVISION
6/3/99	DV	01	WIDE FLANGE TERMINAL ANCHORAGE SYSTEM

© 1999 Texas Department of Transportation

Brown & Root
HOUSTON, TEXAS

IH 35
SOUTHBOUND FRONTAGE ROAD

PLAN AND PROFILE
STA 146+00 TO STA 156+00

0 50 100
SCALE: 1"=100' HORIZ
1"=10' VERT

SHEET 4 OF 14

FED RD DIV NO	STATE PROJECT NO	SHEET NO
6	NH-99(462)	294

STATE	STATE DIST NO	COUNTY
TEXAS	22	WEBB

CONT	SECT	JOB	HIGHWAY NO
0018	06	131	IH 35

REV. 6-25-99

REF FILE(S): J01LOX01.PRO, PRO LV ON = 1-63
J01LOX01.UTI, UTI LV ON = 1-63
J01LOX01.ILL, ILL LV ON =
J01LOX01.DRN, DRN LV ON = 8

REF FILE(S): J01LOX01.ROW, ROW LV ON = 1-23,25-61,63
J01LOX01.BCK, BCK LV ON = 1-30
J01LOX01.EOP, EOP LV ON = 1-11,13-17,19-27,29-41,43-53,5
J01LOX01.EOP, ALG LV ON = 1-44
J01LOX01.BDR, BDR LV ON = 5,10,35,45,46,57,60-62

D03FSX07.DGN-11 05-28-99 BAR_HO_ES05 \HOIVIL\CF0039\PHASE2

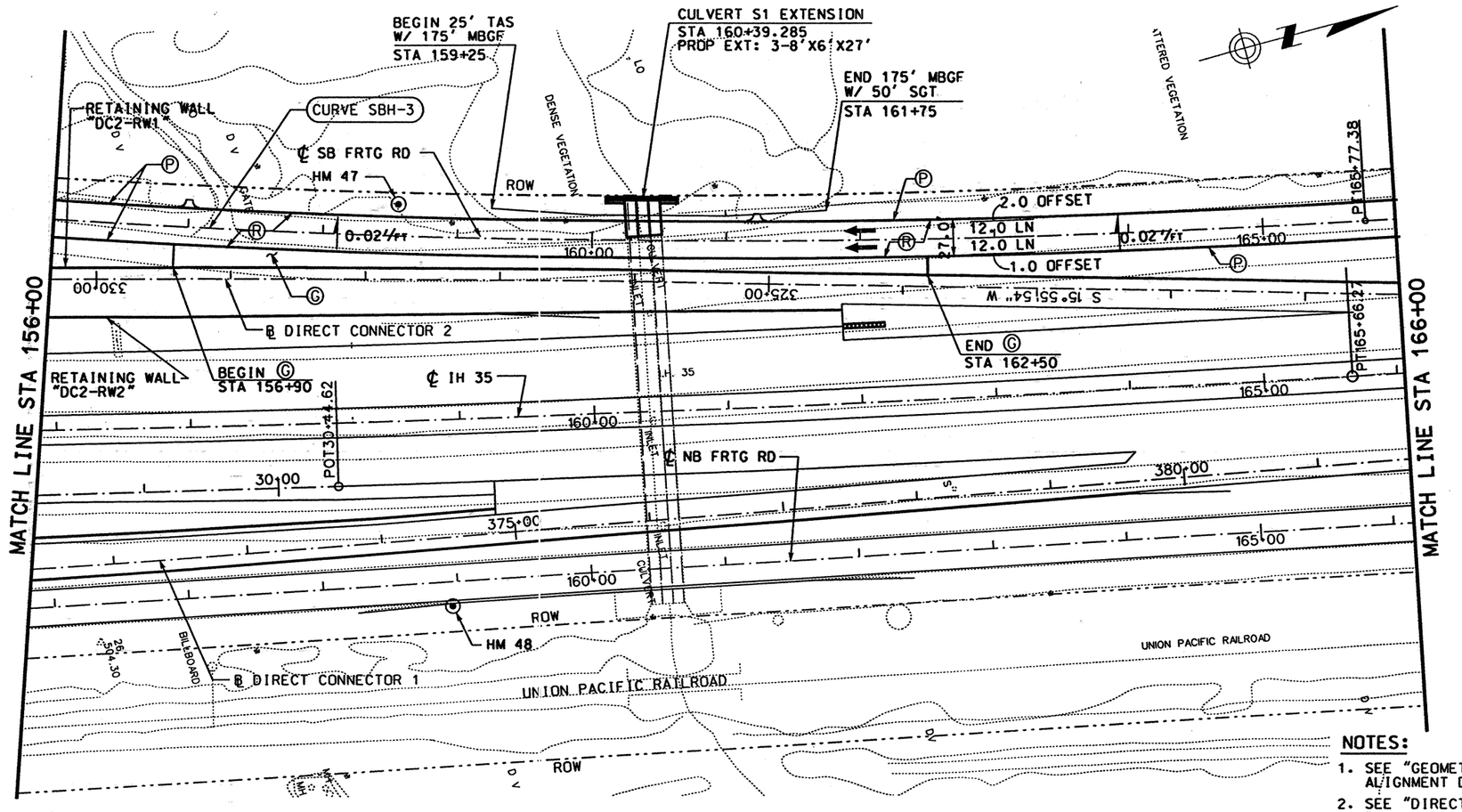

LEGEND:

- Ⓐ CONC PAV (CONT REINF HY STL)(12")
- Ⓑ ASPH CONC PAV (TY A)(4")
- Ⓒ LIME TREATED SUBGRADE (8")
- Ⓓ SINGLE SLOPE CONCRETE BARRIER (SSCB) (TYPE 2)
- Ⓔ TYPE II MONO CURB (6")
- Ⓕ CELL FIBER MULCH SEED (PERM) (RURAL)(CLAY)
- Ⓖ CLASS B RIPRAP (4")
- Ⓗ CONC SIDEWALK (4")
- Ⓘ CONC MEDIAN (6")
- Ⓙ SINGLE SLOPE TRAFFIC RAIL(SSTR) w/ DRAIN SLOTS
- Ⓚ RETAINING WALL
- Ⓛ METAL BEAM GUARD FENCE
- Ⓜ BRICK PAVERS
- Ⓝ REMOVE ASPH CONC PAV
- Ⓞ REMOVE CONC PAV
- Ⓟ TYPE II CURB AND GUTTER (6")
- Ⓠ CONCRETE DRIVEWAYS (6")
- Ⓡ ASPH CONC PAV (TY D)(2")
- Ⓢ ASPH CONC PAV (TY A)(8")
- Ⓣ PLANE ASPH CONC PAV (0 - 1")
- Ⓤ SINGLE SLOPE TRAFFIC RAIL (SSTR)
- Ⓥ CHAINLINK FENCE (6')
- Ⓦ ROADWAY UNDERDRAIN
- Ⓧ WHEELCHAIR RAMP TYPE B

NOTES:

1. SEE "GEOMETRIC DATA SUMMARY" FOR ALIGNMENT DATA.
2. SEE "DIRECT CONNECTOR 2 PLAN & PROFILE" FOR DETAILS.
3. SEE CULVERT LAYOUT FOR DETAILS.
4. SEE "REMOVAL LAYOUT" FOR MORE DETAILS.

STATE OF TEXAS
DERRON S. VINCIK
84028
REGISTERED PROFESSIONAL ENGINEER

The seal appearing on this document was authorized by Derron S. Vincik P.E. 84028, on April 2, 1999.

Derron S. Vincik

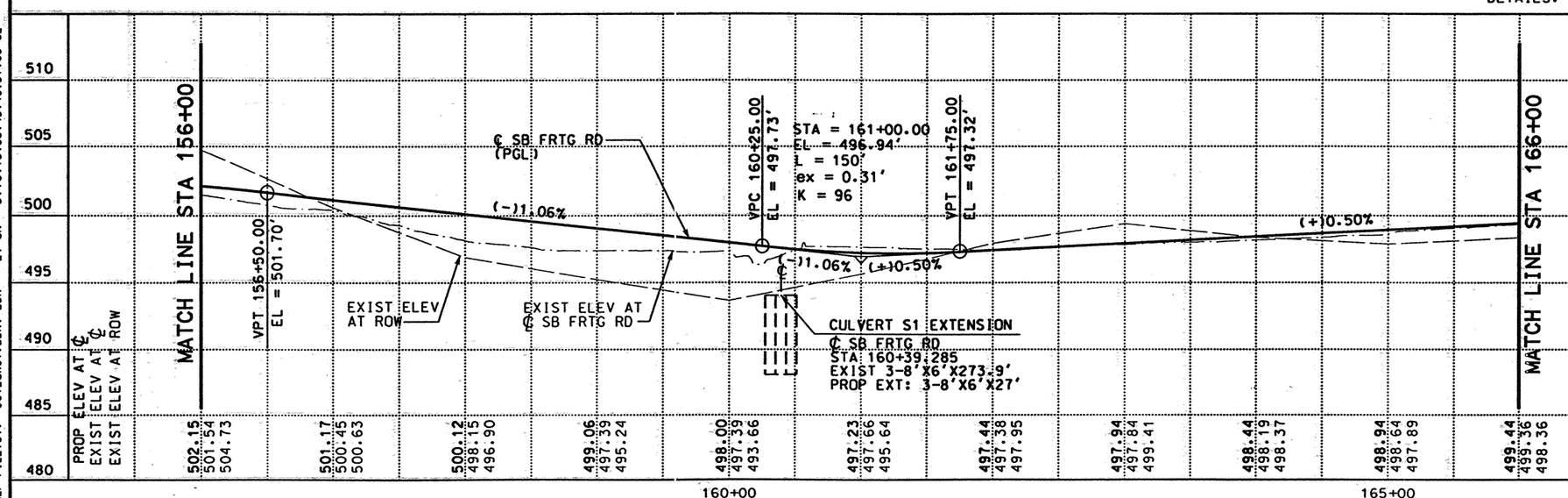

DATE	BY	REV	REVISION

© 1999 Texas Department of Transportation

Brown & Root
HOUSTON, TEXAS

IH 35
SOUTHBOUND FRONTAGE ROAD

PLAN AND PROFILE
STA 156+00 TO STA 166+00

0 50 100
SCALE: 1"=100' HORIZ
1"=10' VERT

SHEET 5 OF 14

FED RD DIV NO	STATE PROJECT NO		SHEET NO
6	NH-99(462)		295
STATE	STATE DIST NO	COUNTY	
TEXAS	22	WEBB	
CONT	SECT	JOB	HIGHWAY NO
0018	06	131	IH 35

J01LDX01.PRO, PRO LV ON = 1-63
J01LDX01.UTI, UTI LV ON = 1-63
J01LDX01.ILL, ILL LV ON = 20
J01LDX01.FND, FND LV ON = 35
J01LDX01.DRN, DRN LV ON = 8
REF FILE(S):

J01LDX01.ROW, ROW LV ON = 1-23,25-61,63
J01LDX01.BCK, BCK LV ON = 1-30
J01LDX01.EOP, EOP LV ON = 1-11,13-17,19-27,29-41,43-53,5
J01LDX01.EOP, ALG LV ON = 1-44
J01LDX01.BDR, BDR LV ON = 5,10,15,35,45,46,57,60-62
REF FILE(S):

D03FSX08.DGN-12 03-08-99 BAR_HO_ES05 \HCIVIL\CF0039\PHASE2

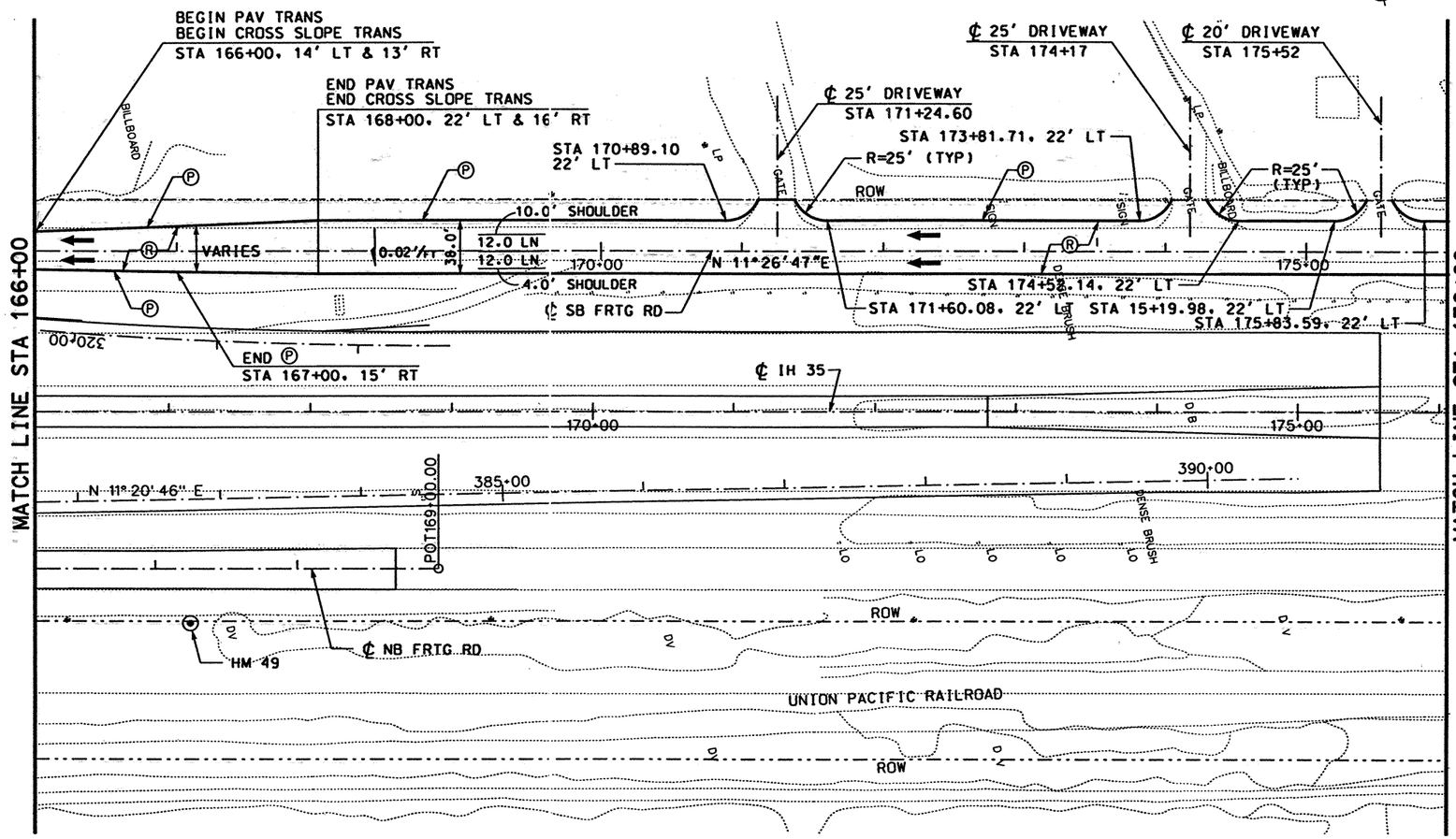

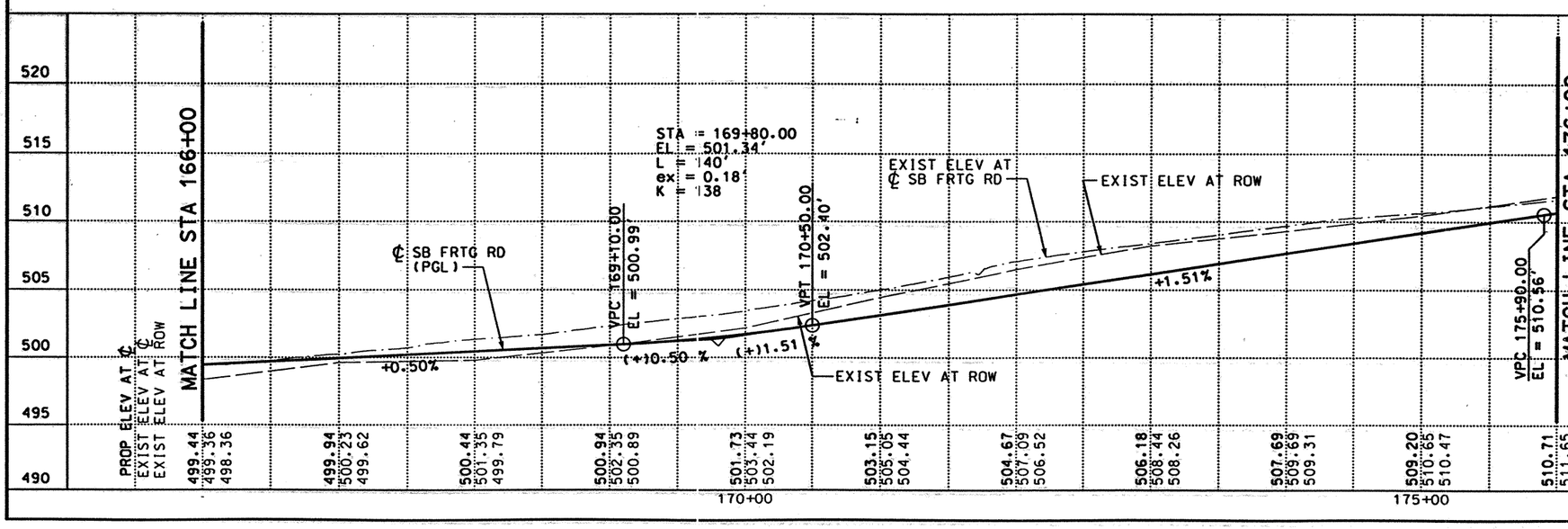

LEGEND:

- Ⓐ CONC PAV (CONT REINF HY STL)(12")
- Ⓑ ASPH CONC PAV (TY A)(4")
- Ⓒ LIME TREATED SUBGRADE (8")
- Ⓓ SINGLE SLOPE CONCRETE BARRIER (SSCB) (TYPE 2)
- Ⓔ TYPE II MONO CURB (6")
- Ⓕ CELL FIBER MULCH SEED (PERM) (RURAL)(CLAY)
- Ⓖ CLASS B RIPRAP (4")
- Ⓗ CONC SIDEWALK (4")
- Ⓘ CONC MEDIAN (6")
- Ⓙ SINGLE SLOPE TRAFFIC RAIL(SSTR) w/ DRAIN SLOTS
- Ⓚ RETAINING WALL
- Ⓛ METAL BEAM GUARD FENCE
- Ⓜ BRICK PAVERS
- Ⓝ REMOVE ASPH CONC PAV
- Ⓞ REMOVE CONC PAV
- Ⓟ TYPE II CURB AND GUTTER (6")
- Ⓠ CONCRETE DRIVEWAYS (6")
- Ⓡ ASPH CONC PAV (TY D)(2")
- Ⓢ ASPH CONC PAV (TY A)(8")
- Ⓣ PLANE ASPH CONC PAV (0 - 1")
- Ⓤ SINGLE SLOPE TRAFFIC RAIL (SSTR)
- Ⓥ CHAINLINK FENCE (6')
- Ⓦ ROADWAY UNDERDRAIN
- Ⓧ WHEELCHAIR RAMP TYPE B

NOTES:

1. SEE "GEOMETRIC DATA SUMMARY" FOR ALIGNMENT DATA.
2. SEE "REMOVAL LAYOUT" FOR MORE DETAILS.

STATE OF TEXAS
DERRON S. VINCIK
84028
REGISTERED PROFESSIONAL ENGINEER

The seal appearing on this document was authorized by Derron S. Vincik P.E. 84028, on April 2, 1999.

Derron S. Vincik

DATE	BY	REV	REVISION

© 1999
Texas Department of Transportation

Brown & Root
HOUSTON, TEXAS

IH 35
SOUTHBOUND FRONTAGE ROAD

PLAN AND PROFILE
STA 166+00 TO STA 176+00

0 50 100
SCALE: 1"=100' HORIZ
1"=10' VERT

SHEET 6 OF 14

FED RD DIV NO	STATE PROJECT NO	SHEET NO
6	NH-99(462)	256

STATE	STATE DIST NO	COUNTY
TEXAS	22	WEBB

CONT	SECT	JOB	HIGHWAY NO
0018	06	131	IH 35

REF FILE(S): J01LOX01.PRO, PRO LV ON = 1-63
J01LOX01.UTI, UTI LV ON = 1-63
J01LOX01.ILL, ILL LV ON = 20
J01LOX01.FND, FND LV ON = 35
J01LOX01.DRN, DRN LV ON = 8

REF FILE(S): J01LOX01.ROW, ROW LV ON = 1-23,25-61,63
J01LOX01.BCK, BCK LV ON = 1-30
J01LOX01.EOP, EOP LV ON = 1-11,13-17,19-27,29-41,43-53,5
J01LOX01.ALG, ALG LV ON = 1-44
J01LOX01.BDR, BDR LV ON = 5,10,15,35,45,46,57,60-62

D03FSX09.DGN-05 03-08-99 BAR_HO_ES05 \HCIVIL\CF0039\PHASE2

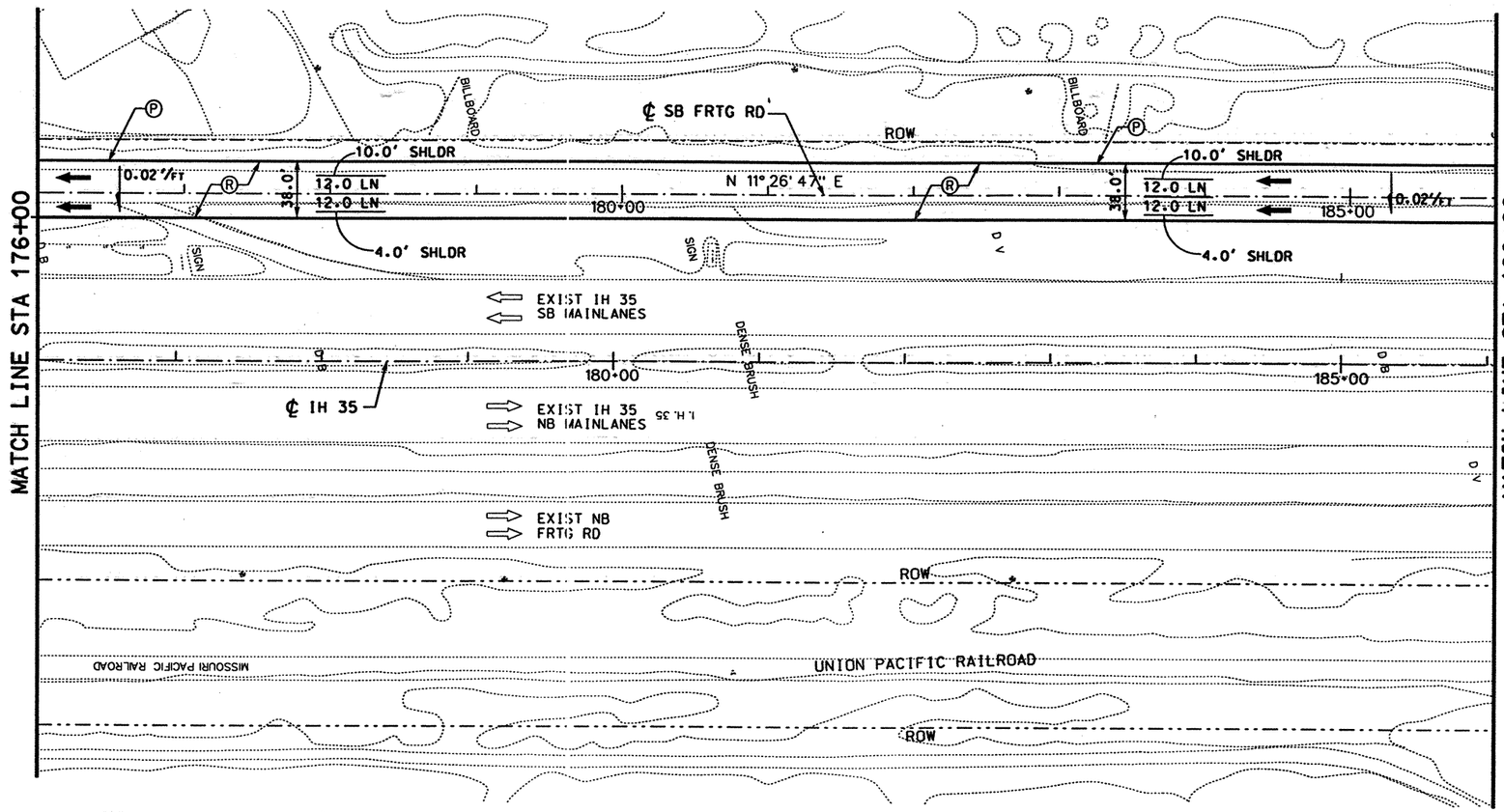

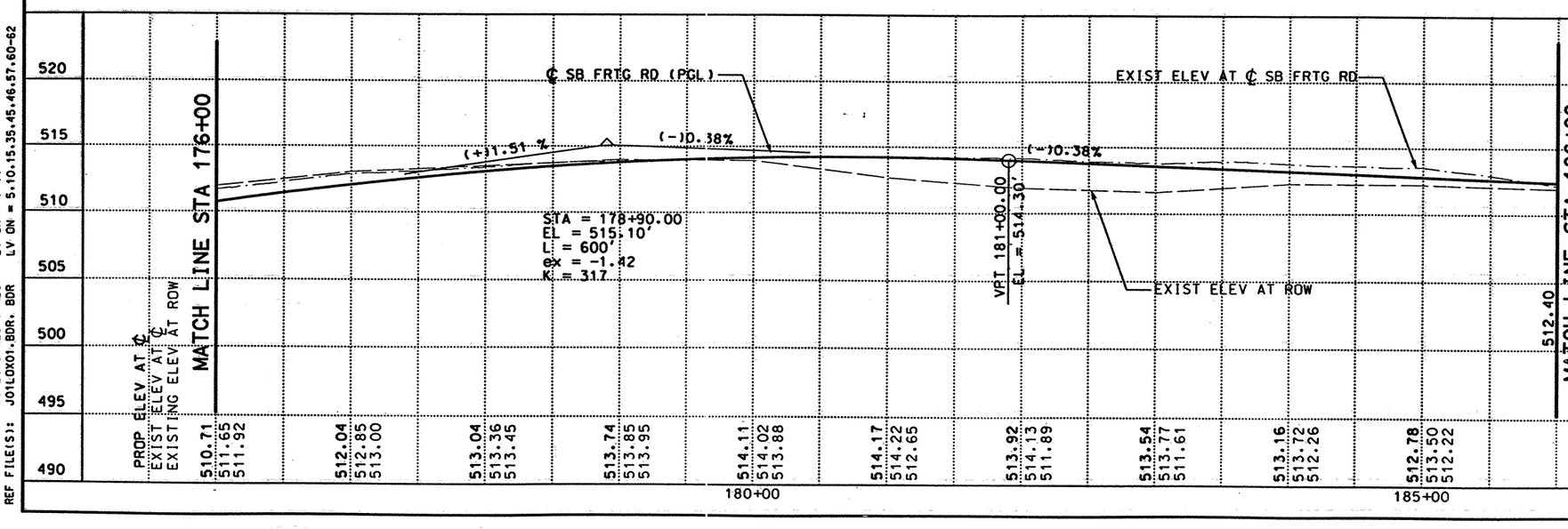

LEGEND:

- Ⓐ CONC PAV (CONT REINF HY STL)(12")
- Ⓑ ASPH CONC PAV (TY A)(4")
- Ⓒ LIME TREATED SUBGRADE (8")
- Ⓓ SINGLE SLOPE CONCRETE BARRIER (SSCB) (TYPE 2)
- Ⓔ TYPE II MONO CURB (6")
- Ⓕ CELL FIBER MULCH SEED (PERM) (RURAL)(CLAY)
- Ⓖ CLASS B RIPRAP (4")
- Ⓗ CONC SIDEWALK (4")
- Ⓘ CONC MEDIAN (6")
- Ⓙ SINGLE SLOPE TRAFFIC RAIL(SSTR) w/ DRAIN SLOTS
- Ⓚ RETAINING WALL
- Ⓛ METAL BEAM GUARD FENCE
- Ⓜ BRICK PAVERS
- Ⓝ REMOVE ASPH CONC PAV
- Ⓞ REMOVE CONC PAV
- Ⓟ TYPE II CURB AND GUTTER (6")
- Ⓠ CONCRETE DRIVEWAYS (6")
- Ⓡ ASPH CONC PAV (TY D)(2")
- Ⓢ ASPH CONC PAV (TY A)(8")
- Ⓣ PLANE ASPH CONC PAV (0 - 1")
- Ⓤ SINGLE SLOPE TRAFFIC RAIL (SSTR)
- Ⓥ CHAINLINK FENCE (6')
- Ⓦ ROADWAY UNDERDRAIN
- Ⓧ WHEELCHAIR RAMP TYPE B

NOTES:

1. SEE "GEOMETRIC DATA SUMMARY" FOR ALIGNMENT DATA.
2. SEE "REMOVAL LAYOUT" FOR MORE DETAILS.

STATE OF TEXAS
DERRON S. VINCIK
84028
REGISTERED PROFESSIONAL ENGINEER

The seal appearing on this document was authorized by Derron S. Vincik P.E. 84028, on April 2, 1999.

DATE	BY	REV	REVISION

© 1999 Texas Department of Transportation

Brown & Root
HOUSTON, TEXAS

IH 35
SOUTHBOUND FRONTAGE ROAD

PLAN AND PROFILE
STA 176+00 TO STA 186+00

0 50 100
SCALE: 1"=100' HORIZ
1"=10' VERT

SHEET 7 OF 14

FED RD DIV NO	STATE PROJECT NO	SHEET NO
6	NH-99(462)	197

STATE	STATE DIST NO	COUNTY
TEXAS	22	WEBB

CONT	SECT	JOB	HIGHWAY NO
0018	06	131	IH 35

D03FSX10.DGN-04 03-08-99 BAR_HO_ES05 \HCIVIL\CF0039\PHASE2

REF FILE(S): IH35NM1.BCK, NMI LV ON = 2-30
JO1LOX01.PRO, PRO LV ON = 1-63
JO1LOX01.UTI, UTI LV ON = 1-63
JO1LOX01.ILL, ILL LV ON = 20
JO1LOX01.FND, FND LV ON = 35
JO1LOX01.DRN, DRN LV ON = 8

REF FILE(S): JO1LOX01.ROW, ROW LV ON = 1-23.25-61.63
JO1LOX01.BCK, BCK LV ON = 2-30
JO1LOX01.EOP, EOP LV ON = 1-11.13-17.19-27.29-41.43-53.5
JO1LOX01.EOP, ALG LV ON = 1-44
JO1LOX01.BDR, BDR LV ON = 5.10.15.35.45.46.57.60-62

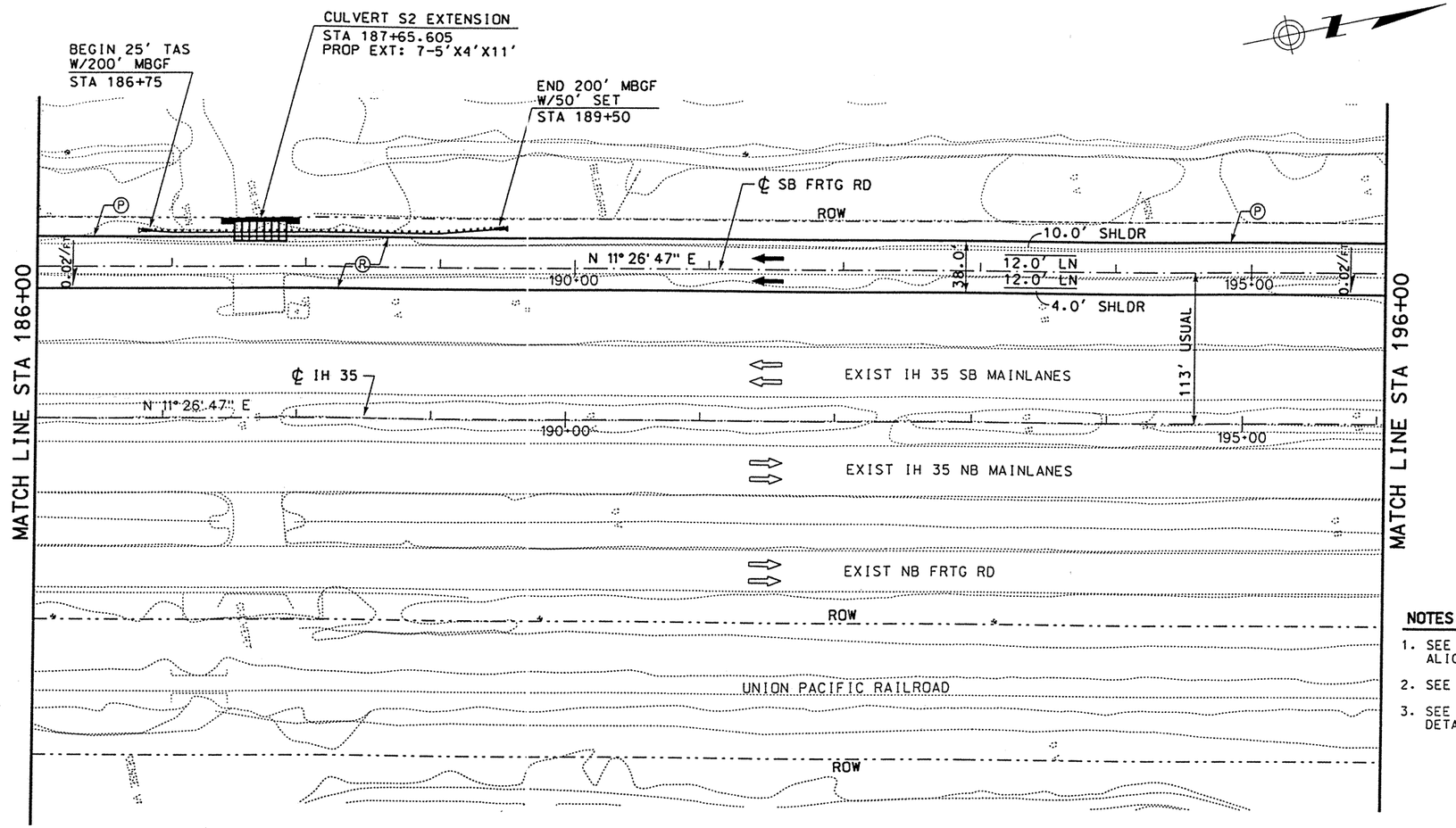

LEGEND:

- Ⓐ CONC PAV (CONT REINF HY STL)(12")
- Ⓑ ASPH CONC PAV (TY A)(4")
- Ⓒ LIME TREATED SUBGRADE (8")
- Ⓓ SINGLE SLOPE CONCRETE BARRIER (SSCB) (TYPE 2)
- Ⓔ TYPE II MONO CURB (6")
- Ⓕ CELL FIBER MULCH SEED (PERM) (RURAL)(CLAY)
- Ⓖ CLASS B RIPRAP (4")
- Ⓗ CONC SIDEWALK (4")
- Ⓘ CONC MEDIAN (6")
- Ⓙ SINGLE SLOPE TRAFFIC RAIL(SSTR) w/ DRAIN SLOTS
- Ⓚ RETAINING WALL
- Ⓛ METAL BEAM GUARD FENCE
- Ⓜ BRICK PAVERS
- Ⓝ REMOVE ASPH CONC PAV
- Ⓞ REMOVE CONC PAV
- Ⓟ TYPE II CURB AND GUTTER (6")
- Ⓠ CONCRETE DRIVEWAYS (6")
- Ⓡ ASPH CONC PAV (TY D)(2")
- Ⓢ ASPH CONC PAV (TY A)(8")
- Ⓣ PLANE ASPH CONC PAV (0 - 1")
- Ⓤ SINGLE SLOPE TRAFFIC RAIL (SSTR)
- Ⓥ CHAINLINK FENCE (6')
- Ⓦ ROADWAY UNDERDRAIN
- Ⓧ WHEELCHAIR RAMP TYPE B

NOTES:

1. SEE "GEOMETRIC DATA SUMMARY" FOR ALIGNMENT DATA.
2. SEE CULVERT LAYOUT FOR DETAILS.
3. SEE "REMOVAL LAYOUT" FOR MORE DETAILS.

STATE OF TEXAS
DERRON S. VINCIK
84028
REGISTERED PROFESSIONAL ENGINEER

The seal appearing on this document was authorized by Derron S. Vincik P.E. 84028, on June 3, 1999.

Derron S. Vincik

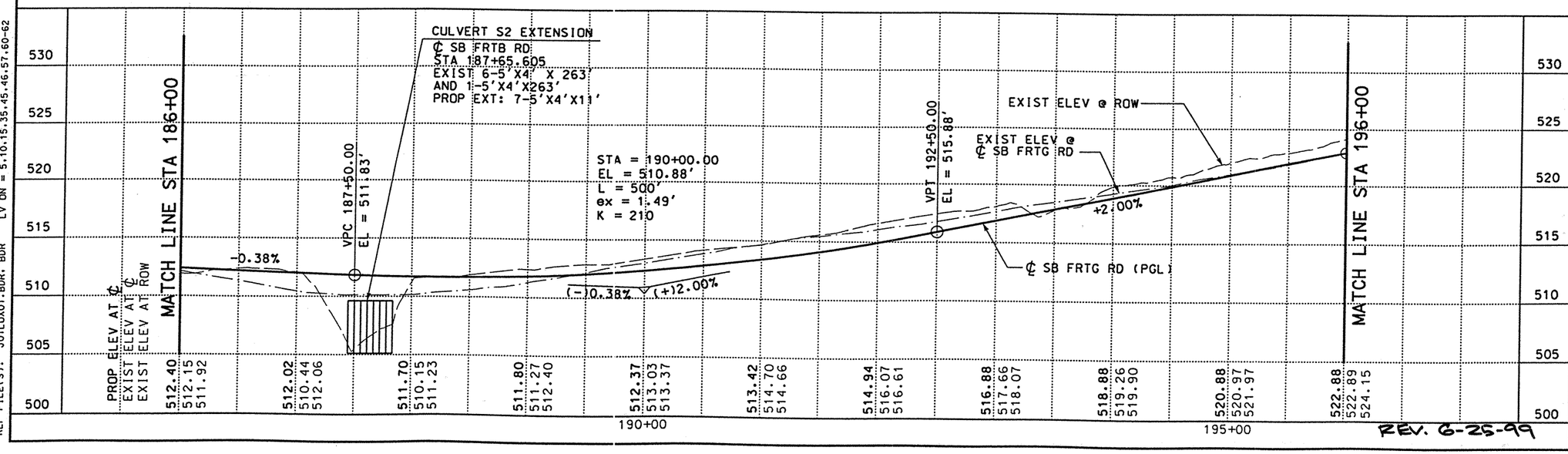

REV. 6-25-99

DATE	BY	REV	REVISION
6/03/99	DV	01	MBGF

© 1999

Texas Department of Transportation

Brown & Root
HOUSTON, TEXAS

IH 35
SOUTHBOUND FRONTAGE ROAD

PLAN AND PROFILE
STA 186+00 TO STA 196+00

0 50 100
SCALE: 1"=100' HORIZ
1"=10' VERT

SHEET 8 OF 14

FED RD DIV NO	STATE PROJECT NO	SHEET NO
6	NH-99(462)	298

STATE	STATE DIST NO	COUNTY
TEXAS	22	WEBB

CONT	SECT	JOB	HIGHWAY NO
0018	06	131	IH 35

REF FILE(S): IH35NMI.BCK, NMI LV ON = 2-30
JO1LOX01.PRO, PRO LV ON = 1-63
JO1LOX01.UTI, UTI LV ON = 1-63
JO1LOX01.ILL, ILL LV ON = 20
JO1LOX01.FND, FND LV ON = 35
JO1LOX01.DRN, DRN LV ON = 8

REF FILE(S): JO1LOX01.ROW, ROW LV ON = 1-23,25-61,63
JO1LOX01.BCK, BCK LV ON = 2-30
JO1LOX01.EOP, EOP LV ON = 1-11,13-17,19-27,29-41,43-53,5
JO1LOX01.EOP, ALG LV ON = 1-44
JO1LOX01.BDR, BDR LV ON = 5,10,15,35,45,46,57,60-62

D03FSX11.DGN-06 06-02-99 BAR_HO_ES05 \HCIVIL\CF0039\PHASE2

NOTES:

PHASE I

1) INSTALL THREE (3) WOOD TEMPORARY SIGNAL POLES WITH ANCHORS. POLES TO EXTEND 35' ABOVE GROUND LEVEL.
2) PLACE CONCRETE TRAFFIC BARRIERS (CTB) ON EAST LEG TO PROTECT POLE.
3) INSTALL CONDUIT (RUN *5) BETWEEN EXISTING CONTROLLER AND TEMPORARY SIGNAL POLE.
4) CONTRACTOR TO MAINTAIN OPERATION OF EXISTING SIGNAL OR TEMPORARY SIGNAL AT ALL TIMES. CONTRACTOR MAY USE FLAGGERS OR POLICE OFFICERS DURING TRANSITION BETWEEN EXISTING SIGNAL AND TEMPORARY SIGNAL. TRANSITION TO BE PERFORMED DURING NON-PEAK HOURS.

LOOP 20 NORTH FRONTAGE ROAD SIGNALS
DIAMOND INTERCHANGE TIMINGS

SIGNAL PHASE SEQUENCE		
MOVEMENT		
WEST INTERSECTION	EAST INTERSECTION	SPLIT
EASTBOUND	EASTBOUND	25 SECONDS
SOUTHBOUND	EASTBOUND	20 SECONDS
WESTBOUND	WESTBOUND	25 SECONDS
WESTBOUND	NORTHBOUND	20 SECONDS
WESTBOUND	SOUTHBOUND	15 SECONDS

PHASE IA

1) INSTALL NORTHEAST WOOD TEMPORARY SIGNAL POLE AT NEW LOCATION.
2) ADJUST ANCHORS ON EXISTING TEMPORARY POLES AS NEEDED.
3) CONTRACTOR MAY USE FLAGGERS OR POLICE OFFICERS DURING TRANSITION OF SIGNAL. TRANSITION TO BE PERFORMED DURING OFF-PEAK TRAVEL HOURS.
4) REMOVE TEMPORARY POLE FROM LOOP 20 ROADWAY. PATCH HOLE WITH CEMENT STABILIZED SAND BACKFILL AND OVERLAY WITH ASPHALT.
5) REMOVE CONCRETE TRAFFIC BARRIERS (CTB) ON EAST LEG OF INTERSECTION.
6) USE TIMINGS FROM PHASE I.

PHASE IIA

1) REVISE SIGNAL TIMING AT INTERSECTION OF LOOP 20 NORTH FRONTAGE ROAD AND IH 35 EAST FRONTAGE ROAD TO REFLECT CLOSURE OF THE ROAD SOUTH OF THE INTERSECTION.

LOOP 20 NORTH FRONTAGE ROAD SIGNALS
DIAMOND INTERCHANGE TIMINGS

SIGNAL PHASE SEQUENCE		
MOVEMENT		
WEST INTERSECTION	EAST INTERSECTION	SPLIT
EASTBOUND	EASTBOUND	30 SECONDS
SOUTHBOUND	EASTBOUND	20 SECONDS
WESTBOUND	WESTBOUND	30 SECONDS
WESTBOUND	SOUTHBOUND	15 SECONDS

PHASE III

1) INSTALL FOUR (4) WOOD TEMPORARY SIGNAL POLES WITH ANCHORS.
2) CONTRACTOR TO PROVIDE ONE (1) ADDITIONAL 5/C TO GROUND BOXES SHOWN ON PLANS WHEN WIRING FOR PERMANENT SIGNAL TO BE USED FOR TEMPORARY SIGNALS.
3) INSTALL 1" CONDUIT BETWEEN GROUND BOXES AND TEMPORARY SIGNAL POLES.
4) TIMING FOR LOOP 20 SOUTH FRONTAGE ROAD AT IH 35 WEST FRONTAGE ROAD TO REFLECT NO SOUTHBOUND TRAFFIC.
5) SIGNAL AT LOOP 20 NORTH FRONTAGE ROAD AND IH 35 EAST FRONTAGE ROAD TO HAVE SIGNAL HEADS BAGGED. WESTBOUND TRAFFIC MUST TURN RIGHT AND SOUTHBOUND TRAFFIC MUST TURN LEFT.

LOOP 20 SOUTH FRONTAGE ROAD SIGNALS
DIAMOND INTERCHANGE TIMINGS

SIGNAL PHASE SEQUENCE		
MOVEMENT		
WEST INTERSECTION	EAST INTERSECTION	SPLIT
EASTBOUND	EASTBOUND	30 SECONDS
WESTBOUND	WESTBOUND	30 SECONDS
WESTBOUND	NORTHBOUND	20 SECONDS

PHASE IV

1) SIGNALS AT LOOP 20 NORTH FRONTAGE ROAD AND IH 35 WEST FRONTAGE ROAD TO HAVE SIGNAL HEADS BAGGED. ONLY SOUTHBOUND TRAFFIC.
2) REVISE TIMING AT LOOP 20 SOUTH FRONTAGE ROAD AND IH 35 WEST FRONTAGE ROAD TO ACCOMODATE SOUTHBOUND TRAFFIC.
3) AFTER ALL ROADWAY CONSTRUCTION IS COMPLETE, REMOVE TEMPORARY POLES AND ABANDON TEMPORARY CONDUIT AND WIRING.

LOOP 20 SOUTH FRONTAGE ROAD SIGNALS
DIAMOND INTERCHANGE TIMINGS

SIGNAL PHASE SEQUENCE		
MOVEMENT		
WEST INTERSECTION	EAST INTERSECTION	SPLIT
EASTBOUND	EASTBOUND	25 SECONDS
SOUTHBOUND	EASTBOUND	15 SECONDS
WESTBOUND	WESTBOUND	25 SECONDS
WESTBOUND	NORTHBOUND	20 SECONDS

STATE OF TEXAS
ISAAC F. JOSKOWICZ
67445
REGISTERED PROFESSIONAL ENGINEER
5/14/99
I.F. Joskowicz, PE, Proje

DATE	BY	REV	REVISION

© 1999 Texas Department of Transportation

BROWN & ROOT
HOUSTON, TEXAS

TEI Traffic Engineers, Inc.
8303 Southwest Freeway, Suite 200, Houston, TX 77074
TEL (713) 270-05 FAX (713) 270-0148
Email tei@compuserve.com

R&H
RODRIGUEZ & HUGGINS, INC.
CONSULTING ENGINEERS
11824 JOLLYVILLE ROAD SUITE 402
AUSTIN, TEXAS 78759
PHONE: 512 335 1754 FAX: 512 335 1799

LOOP 20
TEMP. TRAFFIC SIGNALS
NOTES

0 10 20 40

SHEET 5 OF 5

FED RD DIV NO	STATE PROJECT NO		SHEET NO
6			299E
STATE	STATE DIST NO		COUNTY
TEXAS	22		WEBB
CONT	SECT	JOB	HIGHWAY NO
0086	14	023	LOOP 20

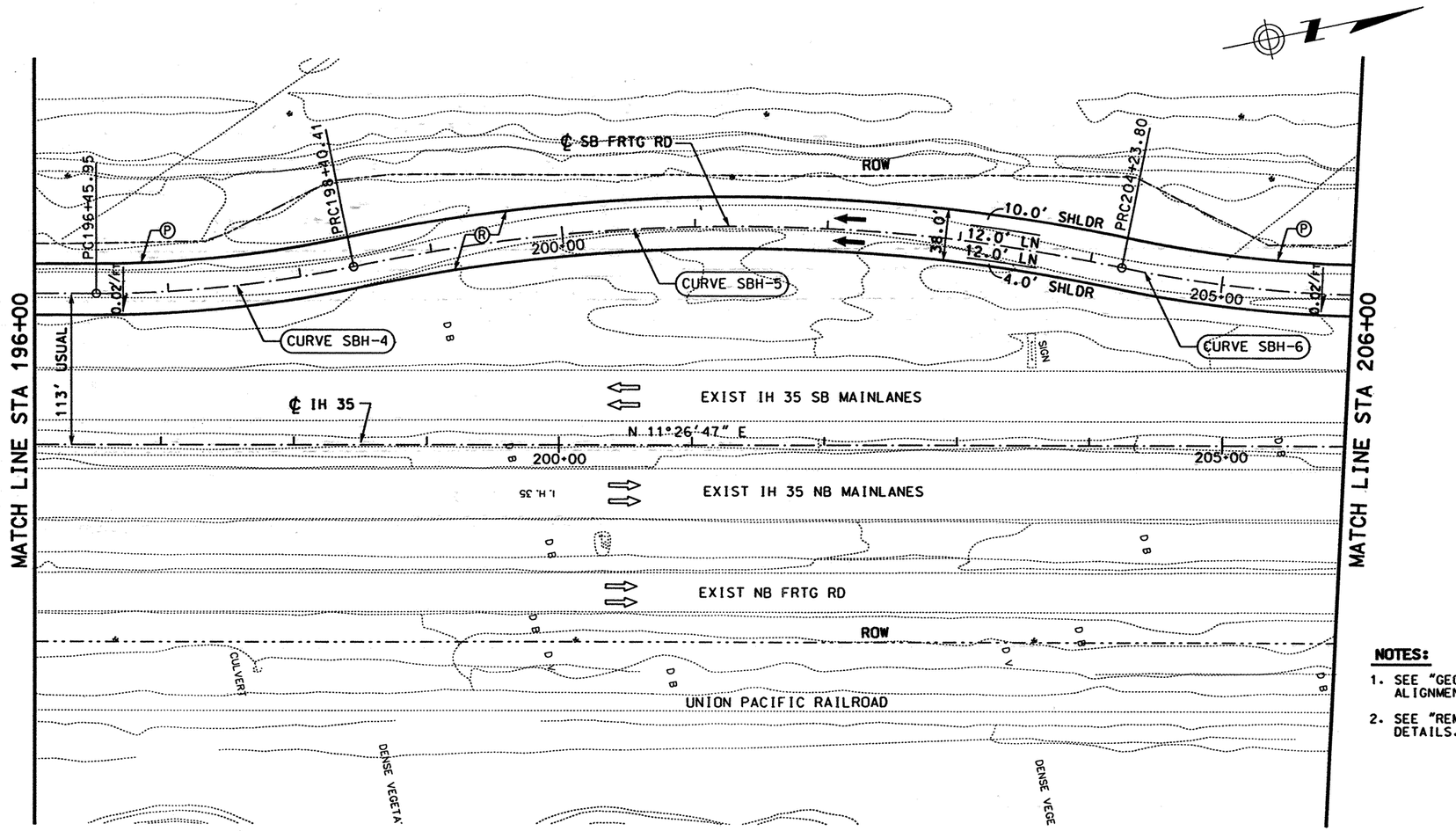

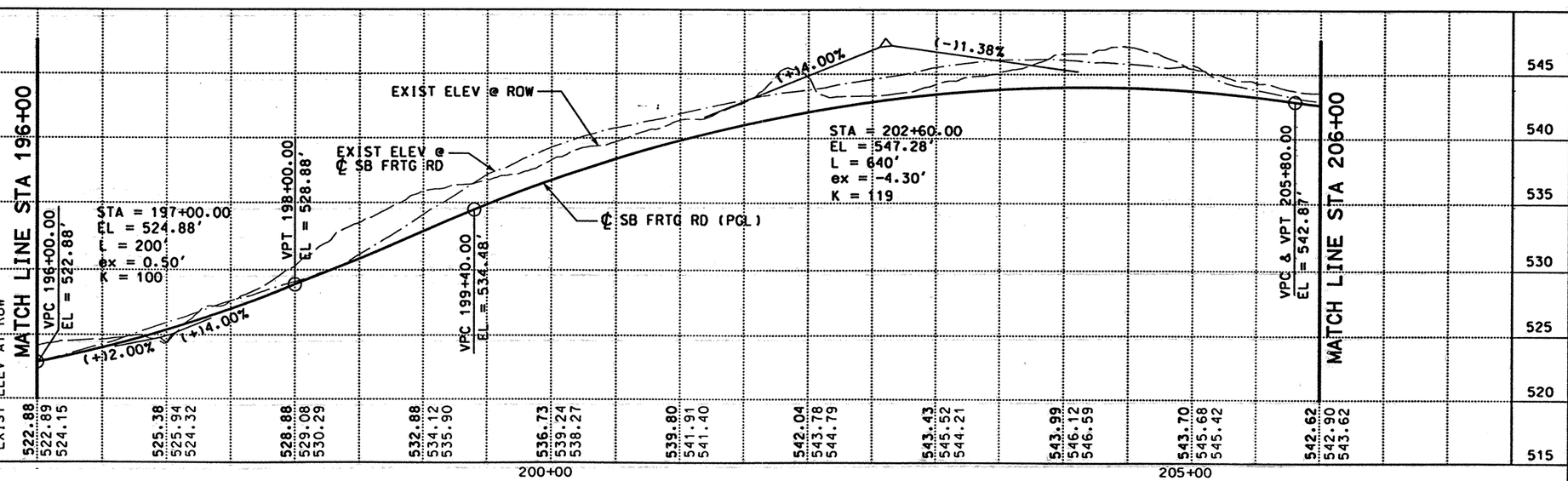

LEGEND:

- Ⓐ CONC PAV (CONT REINF HY STL)(12")
- Ⓑ ASPH CONC PAV (TY A)(4")
- Ⓒ LIME TREATED SUBGRADE (8")
- Ⓓ SINGLE SLOPE CONCRETE BARRIER (SSCB) (TYPE 2)
- Ⓔ TYPE II MONO CURB (6")
- Ⓕ CELL FIBER MULCH SEED (PERM) (RURAL)(CLAY)
- Ⓖ CLASS B RIPRAP (4")
- Ⓗ CONC SIDEWALK (4")
- Ⓘ CONC MEDIAN (6")
- Ⓙ SINGLE SLOPE TRAFFIC RAIL(SSTR) w/ DRAIN SLOTS
- Ⓚ RETAINING WALL
- Ⓛ METAL BEAM GUARD FENCE
- Ⓜ BRICK PAVERS
- Ⓝ REMOVE ASPH CONC PAV
- Ⓞ REMOVE CONC PAV
- Ⓟ TYPE II CURB AND GUTTER (6")
- Ⓠ CONCRETE DRIVEWAYS (6")
- Ⓡ ASPH CONC PAV (TY D)(2")
- Ⓢ ASPH CONC PAV (TY A)(8")
- Ⓣ PLANE ASPH CONC PAV (0 - 1")
- Ⓤ SINGLE SLOPE TRAFFIC RAIL (SSTR)
- Ⓥ CHAINLINK FENCE (6')
- Ⓦ ROADWAY UNDERDRAIN
- Ⓧ WHEELCHAIR RAMP TYPE B

NOTES:

1. SEE "GEOMETRIC DATA SUMMARY" FOR ALIGNMENT DATA.
2. SEE "REMOVAL LAYOUT" FOR MORE DETAILS.

STATE OF TEXAS
DERRON S. VINCIK
84028
REGISTERED PROFESSIONAL ENGINEER

The seal appearing on this document was authorized by Derron S. Vincik P.E. 84028, on April 2, 1999.

Derron S. Vincik

DATE	BY	REV	REVISION

© 1999 Texas Department of Transportation

Brown & Root
HOUSTON, TEXAS

IH 35
SOUTHBOUND FRONTAGE ROAD

PLAN AND PROFILE
STA 196+00 TO STA 206+00

0 50 100
SCALE: 1"=100' HORIZ
1"=10' VERT

SHEET 9 OF 14

FED RD DIV NO	STATE PROJECT NO	SHEET NO
6	NH-99(462)	199

STATE	STATE DIST NO	COUNTY
TEXAS	22	WEBB

CONT	SECT	JOB	HIGHWAY NO
0018	06	131	IH 35

REF FILE(S): IH35NMI.BCK, NMI LV ON = 2-30
JO1LOX01.PRO, PRO LV ON = 1-63
JO1LOX01.UTI, UTI LV ON = 1-63
JO1LOX01.ILL, ILL LV ON = 20
JO1LOX01.FND, FND LV ON = 35
JO1LOX01.DRN, DRN LV ON = 8

REF FILE(S): JO1LOX01.RDW, RDW LV ON = 1-23,25-61,63
JO1LOX01.BCK, BCK LV ON = 2-30
JO1LOX01.EDP, EDP LV ON = 1-11,13-17,19-27,29-41,43-53,5
JO1LOX01.EDP, ALG LV ON = 1,2,4-8,10-16,18,19,23-36,38,39,45-49
JO1LOX01.BDR, BDR LV ON = 5,10,15,35,45,46,57,60-62

D03FSX12.DGN-04 03-08-99 BAR_HO_ES05 \HCIVIL\CF0039\PHASE2

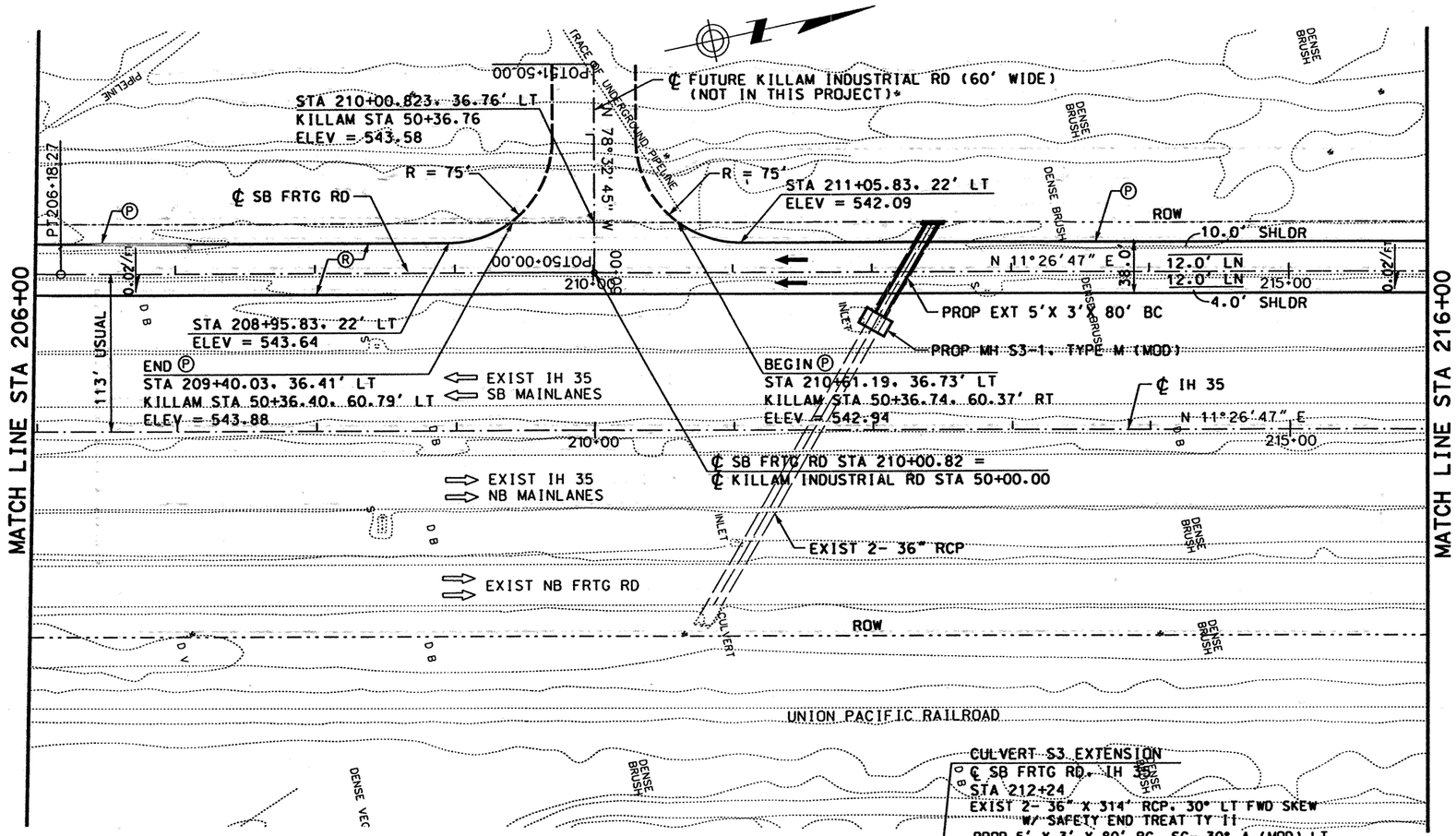

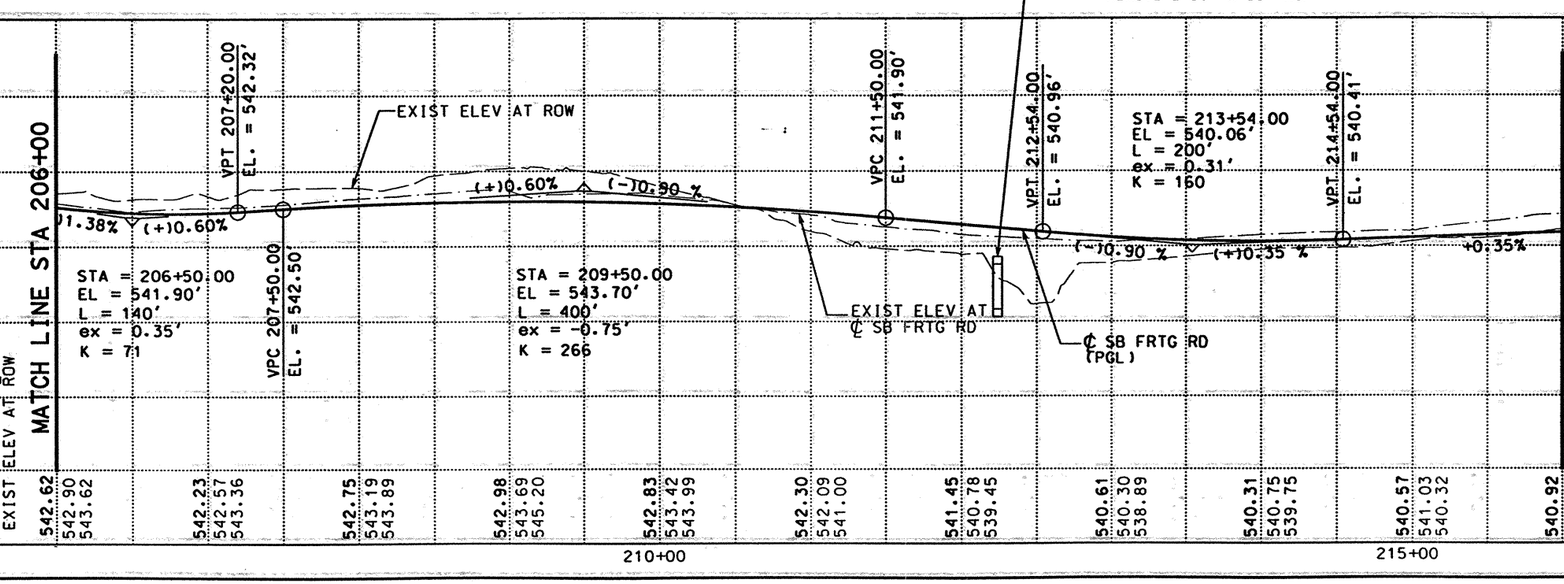

LEGEND:

- Ⓐ CONC PAV (CONT REINF HY STL)(12")
- Ⓑ ASPH CONC PAV (TY A)(4")
- Ⓒ LIME TREATED SUBGRADE (8")
- Ⓓ SINGLE SLOPE CONCRETE BARRIER (SSCB) (TYPE 2)
- Ⓔ TYPE II MONO CURB (6")
- Ⓕ CELL FIBER MULCH SEED (PERM) (RURAL)(CLAY)
- Ⓖ CLASS B RIPRAP (4")
- Ⓗ CONC SIDEWALK (4")
- Ⓘ CONC MEDIAN (6")
- Ⓙ SINGLE SLOPE TRAFFIC RAIL(SSTR) w/ DRAIN SLOTS
- Ⓚ RETAINING WALL
- Ⓛ METAL BEAM GUARD FENCE
- Ⓜ BRICK PAVERS
- Ⓝ REMOVE ASPH CONC PAV
- Ⓞ REMOVE CONC PAV
- Ⓟ TYPE II CURB AND GUTTER (6")
- Ⓠ CONCRETE DRIVEWAYS (6")
- Ⓡ ASPH CONC PAV (TY D)(2")
- Ⓢ ASPH CONC PAV (TY A)(8")
- Ⓣ PLANE ASPH CONC PAV (0 - 1")
- Ⓤ SINGLE SLOPE TRAFFIC RAIL (SSTR)
- Ⓥ CHAINLINK FENCE (6')
- Ⓦ ROADWAY UNDERDRAIN
- Ⓧ WHEELCHAIR RAMP TYPE B

NOTES:

1. SEE "GEOMETRIC DATA SUMMARY" FOR ALIGNMENT DATA.
2. SEE "REMOVAL LAYOUT" FOR MORE DETAILS.

STATE OF TEXAS
DERRON S. VINCIK
P.E. 84028
REGISTERED PROFESSIONAL ENGINEER

The seal appearing on this document was authorized by Derron S. Vincik P.E. 84028, on April 2, 1999.

DATE	BY	REV	REVISION

© 1999
Texas Department of Transportation

Brown & Root
HOUSTON, TEXAS

IH 35
SOUTHBOUND FRONTAGE ROAD

PLAN AND PROFILE
STA 206+00 TO STA 216+00

0 50 100
SCALE: 1"=100' HORIZ
1"=10' VERT

SHEET 10 OF 14

FED RD DIV NO	STATE PROJECT NO		SHEET NO
6	NH-99(462)		300
STATE	STATE DIST NO	COUNTY	
TEXAS	22	WEBB	
CONT	SECT	JOB	HIGHWAY NO
0018	06	131	IH 35

REF FILE(S): IH35NMI.BCK, NMI LV ON = 2-30
JO1LOX01.PRO, PRO LV ON = 1-63
JO1LOX01.UTI, UTI LV ON = 1-63
JO1LOX01.ILL, ILL LV ON = 20
JO1LOX01.FND, FND LV ON = 35
JO1LOX01.DRN, DRN LV ON = 8

REF FILE(S): LV ON = 1-23,25-61,63
LV ON = 2-30
LV ON = 1-11,13-17,19-27,29-41,43-53,5
LV ON = 1-44
LV ON = 5,10,15,35,45,46,57,60-62

REF FILE(S): JO1LOX01.ROW, ROW
JO1LOX01.BCK, BCK
JO1LOX01.EOP, EOP
JO1LOX01.EOP, ALG
JO1LOX01.BDR, BDR

D03FSX13.DGN-05 03-15-99 BAR_HO_ES05 \HCIVIL\CF0039\PHASE2

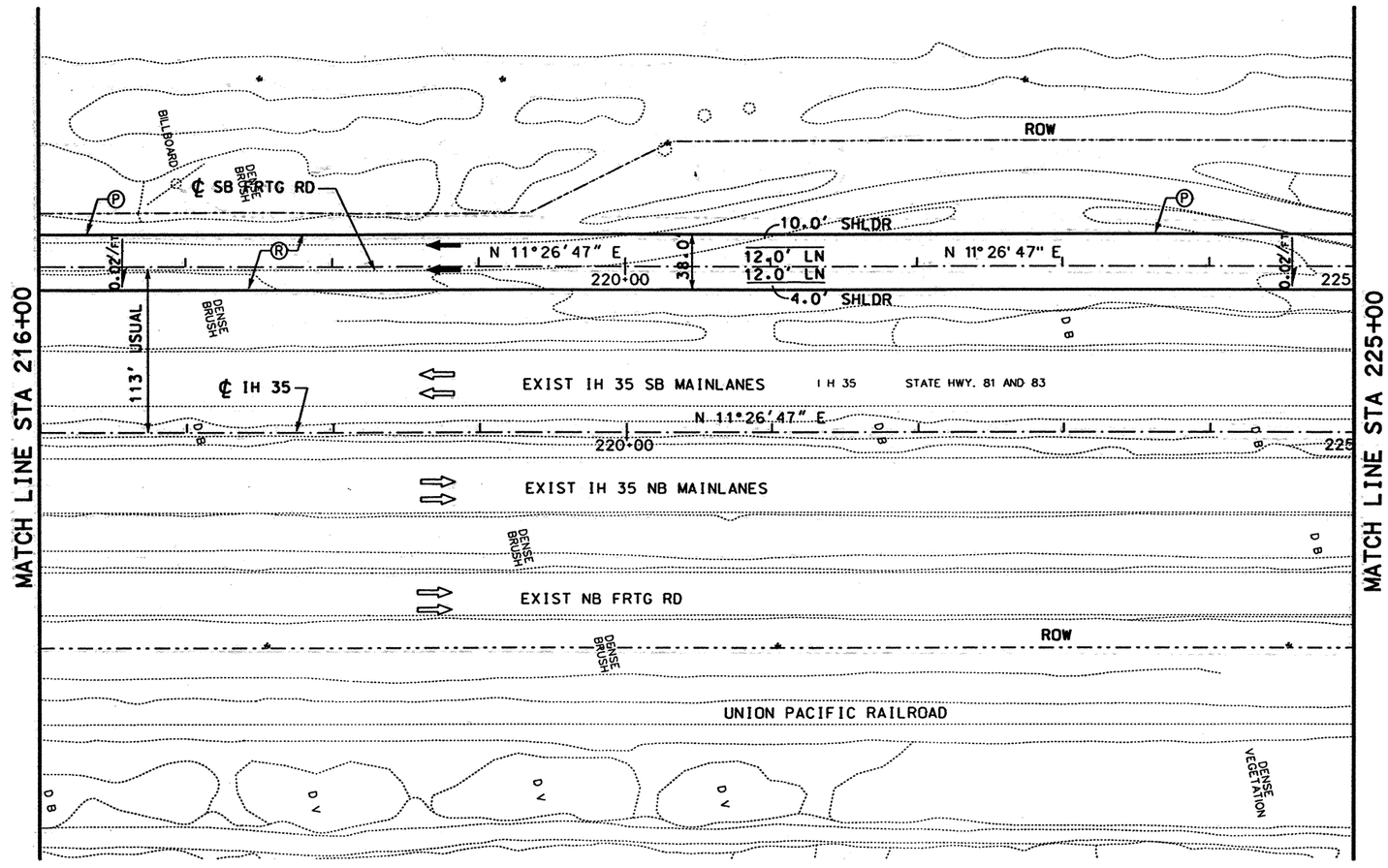

LEGEND:

- Ⓐ CONC PAV (CONT REINF HY STL)(12")
- Ⓑ ASPH CONC PAV (TY A)(4")
- Ⓒ LIME TREATED SUBGRADE (8")
- Ⓓ SINGLE SLOPE CONCRETE BARRIER (SSCB) (TYPE 2)
- Ⓔ TYPE II MONO CURB (6")
- Ⓕ CELL FIBER MULCH SEED (PERM) (RURAL)(CLAY)
- Ⓖ CLASS B RIPRAP (4")
- Ⓗ CONC SIDEWALK (4")
- Ⓘ CONC MEDIAN (6")
- Ⓙ SINGLE SLOPE TRAFFIC RAIL(SSTR) w/ DRAIN SLOTS
- Ⓚ RETAINING WALL
- Ⓛ METAL BEAM GUARD FENCE
- Ⓜ BRICK PAVERS
- Ⓝ REMOVE ASPH CONC PAV
- Ⓞ REMOVE CONC PAV
- Ⓟ TYPE II CURB AND GUTTER (6")
- Ⓠ CONCRETE DRIVEWAYS (6")
- Ⓡ ASPH CONC PAV (TY D)(2")
- Ⓢ ASPH CONC PAV (TY A)(8")
- Ⓣ PLANE ASPH CONC PAV (0 - 1")
- Ⓤ SINGLE SLOPE TRAFFIC RAIL (SSTR)
- Ⓥ CHAINLINK FENCE (6')
- Ⓦ ROADWAY UNDERDRAIN
- Ⓧ WHEELCHAIR RAMP TYPE B

NOTES:

1. SEE "GEOMETRIC DATA SUMMARY" FOR ALIGNMENT DATA.
2. SEE "REMOVAL LAYOUT" FOR MORE DETAILS.

STATE OF TEXAS
DERRON S. VINCIK
84028
REGISTERED PROFESSIONAL ENGINEER

The seal appearing on this document was authorized by Derron S. Vincik P.E. 84028, on April 2, 1999.

Derron S. Vincik

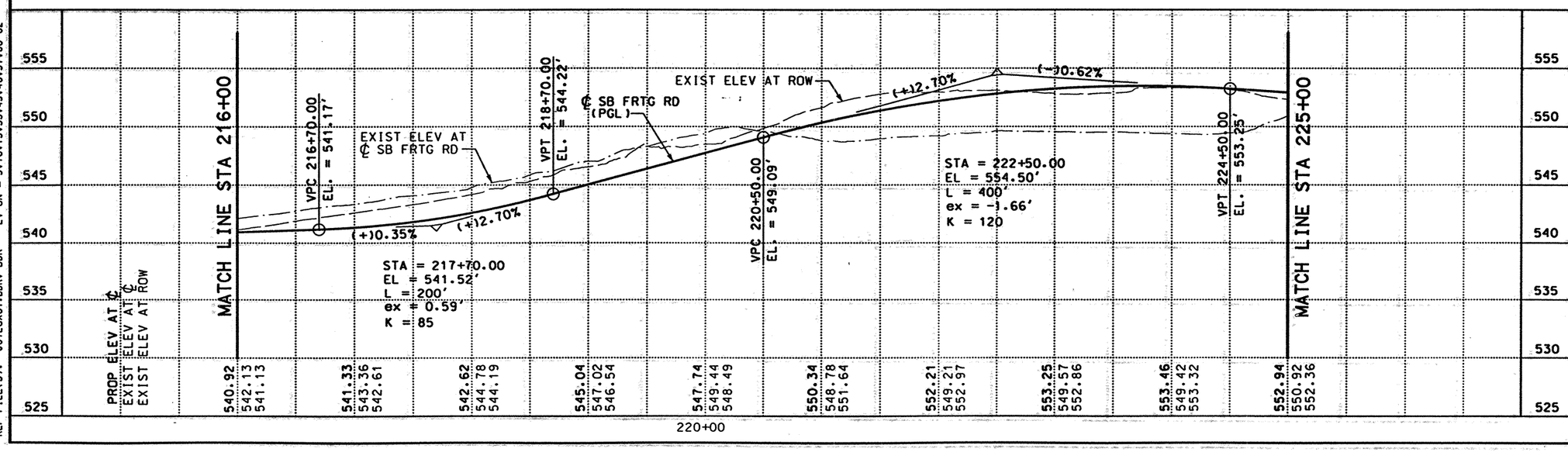

DATE	BY	REV	REVISION

© 1999 Texas Department of Transportation

Brown & Root
HOUSTON, TEXAS

IH 35
SOUTHBOUND FRONTAGE ROAD

PLAN AND PROFILE
STA 216+00 TO STA 225+00

0 50 100
SCALE: 1"=100' HORIZ
1"=10' VERT

SHEET 11 OF 14

FED RD DIV NO	STATE PROJECT NO	SHEET NO
6	NH-99(462)	301

STATE	STATE DIST NO	COUNTY
TEXAS	22	WEBB

CONT	SECT	JOB	HIGHWAY NO
0018	06	131	IH 35

REF FILE(S): IH35NMI.BCK, NMI LV ON = 2-30
JO1LOX01.PRO, PRO LV ON = 1-63
JO1LOX01.UTI, UTI LV ON = 1-63
JO1LOX01.ILL, ILL LV ON = 20
JO1LOX01.FND, FND LV ON = 35
JO1LOX01.DRN, DRN LV ON = 8

REF FILE(S): JO1LOX01.ROW, ROW LV ON = 1-23,25-61,63
JO1LOX01.BCK, BCK LV ON = 2-30
JO1LOX01.EDP, EDP LV ON = 1-11,13-17,19-27,29-41,43-53,5
JO1LOX01.EDP, ALG LV ON = 1-44
JO1LOX01.BDR, BDR LV ON = 5,10-15,35,45,46,57,60-62

DO3FSX14.DGN-04 03-08-99 BAR_HOLES05 \HCIVIL\CF0039\PHASE2

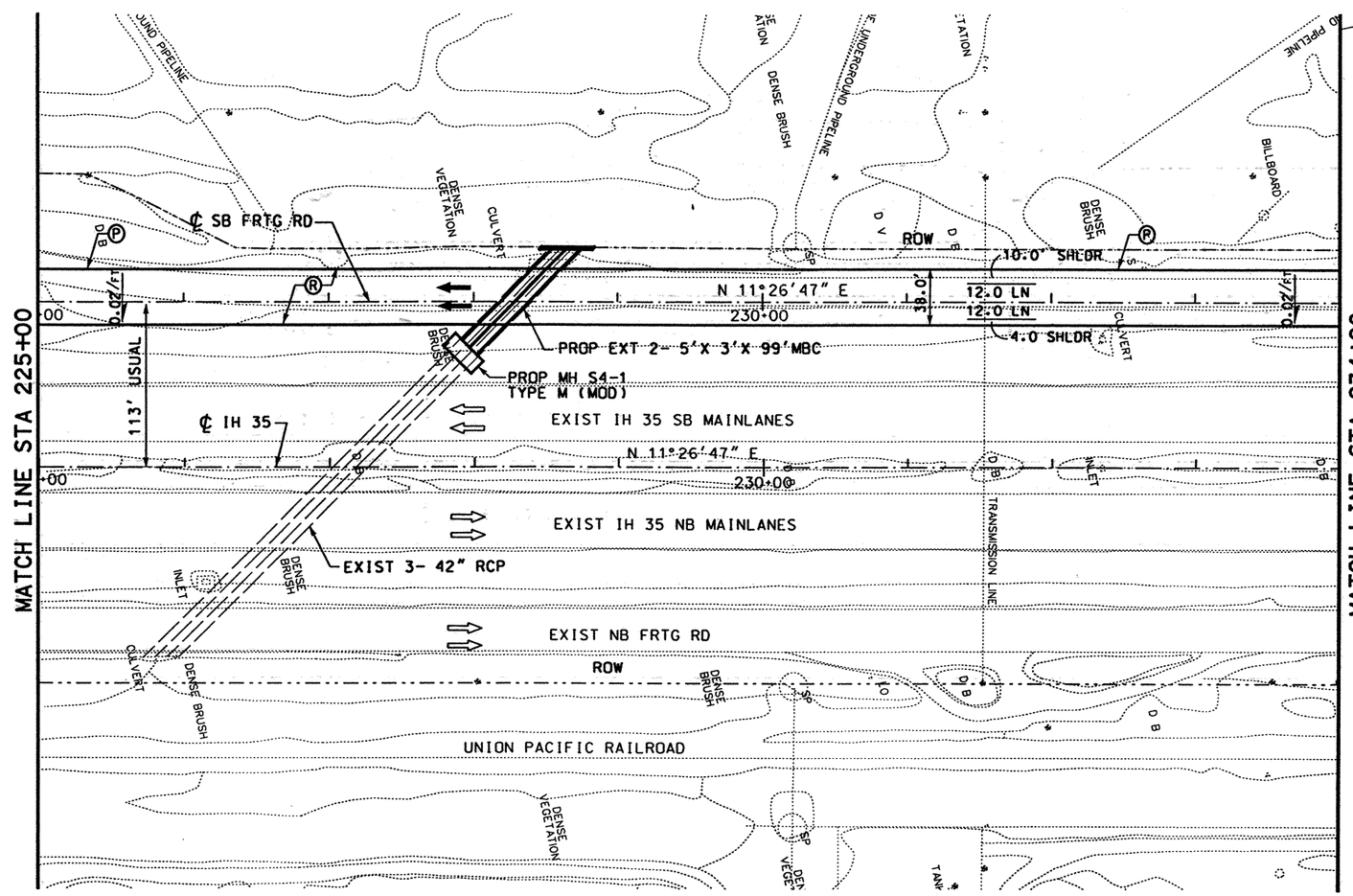

LEGEND:

- Ⓐ CONC PAV (CONT REINF HY STL)(12")
- Ⓑ ASPH CONC PAV (TY A)(4")
- Ⓒ LIME TREATED SUBGRADE (8")
- Ⓓ SINGLE SLOPE CONCRETE BARRIER (SSCB) (TYPE 2)
- Ⓔ TYPE II MONO CURB (6")
- Ⓕ CELL FIBER MULCH SEED (PERM) (RURAL)(CLAY)
- Ⓖ CLASS B RIPRAP (4")
- Ⓗ CONC SIDEWALK (4")
- Ⓘ CONC MEDIAN (6")
- Ⓙ SINGLE SLOPE TRAFFIC RAIL(SSTR) w/ DRAIN SLOTS
- Ⓚ RETAINING WALL
- Ⓛ METAL BEAM GUARD FENCE
- Ⓜ BRICK PAVERS
- Ⓝ REMOVE ASPH CONC PAV
- Ⓞ REMOVE CONC PAV
- Ⓟ TYPE II CURB AND GUTTER (6")
- Ⓠ CONCRETE DRIVEWAYS (6")
- Ⓡ ASPH CONC PAV (TY D)(2")
- Ⓢ ASPH CONC PAV (TY A)(8")
- Ⓣ PLANE ASPH CONC PAV (0 - 1")
- Ⓤ SINGLE SLOPE TRAFFIC RAIL (SSTR)
- Ⓥ CHAINLINK FENCE (6')
- Ⓦ ROADWAY UNDERDRAIN
- Ⓧ WHEELCHAIR RAMP TYPE B

NOTES:

1. SEE "GEOMETRIC DATA SUMMARY" FOR ALIGNMENT DATA.
2. SEE "REMOVAL LAYOUT" FOR MORE DETAILS.

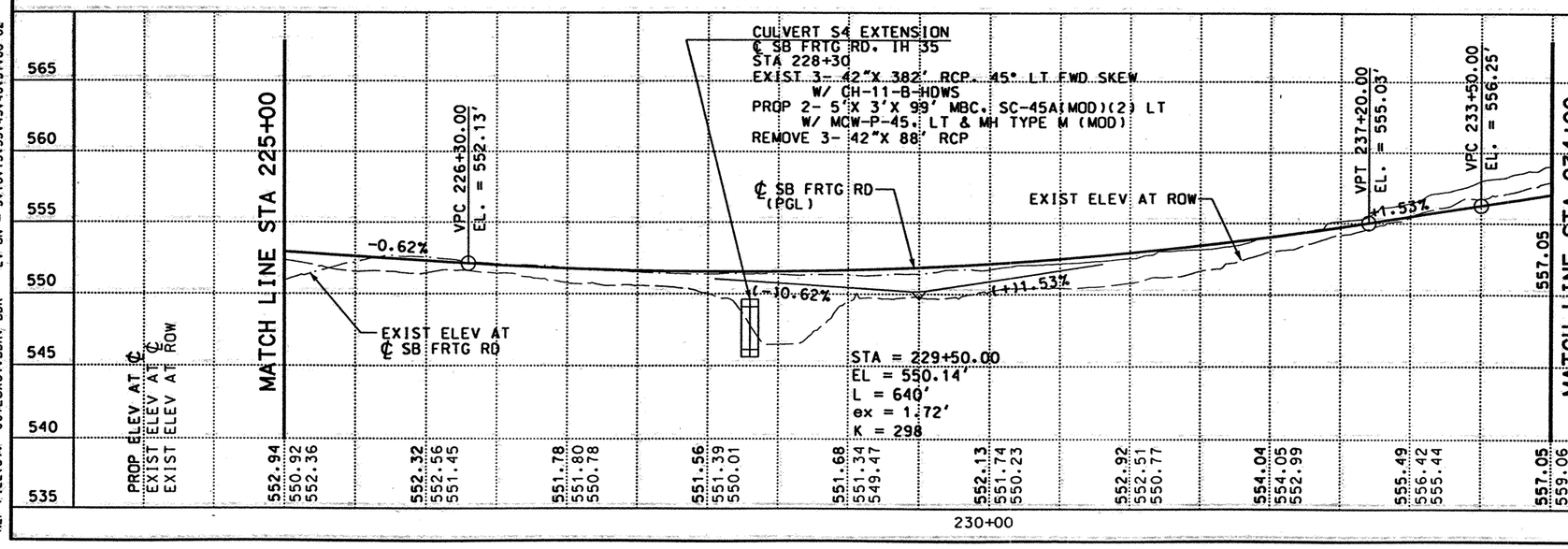

The seal appearing on this document was authorized by Derron S. Vincik P.E. 84028, on April 2, 1999.

DATE	BY	REV	REVISION

© 1999 Texas Department of Transportation

Brown & Root
HOUSTON, TEXAS

IH 35
SOUTHBOUND FRONTAGE ROAD

PLAN AND PROFILE
STA 225+00 TO STA 234+00

0 50 100
SCALE: 1"=100' HORIZ
1"=10' VERT

SHEET 12 OF 14

FED RD DIV NO	STATE PROJECT NO	SHEET NO
6	NH-99(462)	302

STATE	STATE DIST NO	COUNTY
TEXAS	22	WEBB

CONT	SECT	JOB	HIGHWAY NO
0018	06	131	IH 35

IH35NMI.BCK, NMI LV ON = 2-30
J01LOX01.PRO, PRO LV ON = 1-63
J01LOX01.UTI, UTI LV ON = 1-63
J01LOX01.ILL, ILL LV ON = 20
J01LOX01.FND, FND LV ON = 35
J01LOX01.DRN, DRN LV ON = 8
REF FILE(S): J01LOX01.ROW, ROW LV ON = 1-23,25-61,63
J01LOX01.BCK, BCK LV ON = 2-30
J01LOX01.EOP, EOP LV ON = 1-11,13-17,19-27,29-41,43-53,5
J01LOX01.EOP, ALG LV ON = 1-44
J01LOX01.BDR, BDR LV ON = 5,10,15,35,45,46,57,60-62
REF FILE(S): J01LOX01.BDR, BDR

D03FSX15.DGN-05 03-15-99 BAR_HO_ES05 \HCIVIL\CF0039\PHASE2

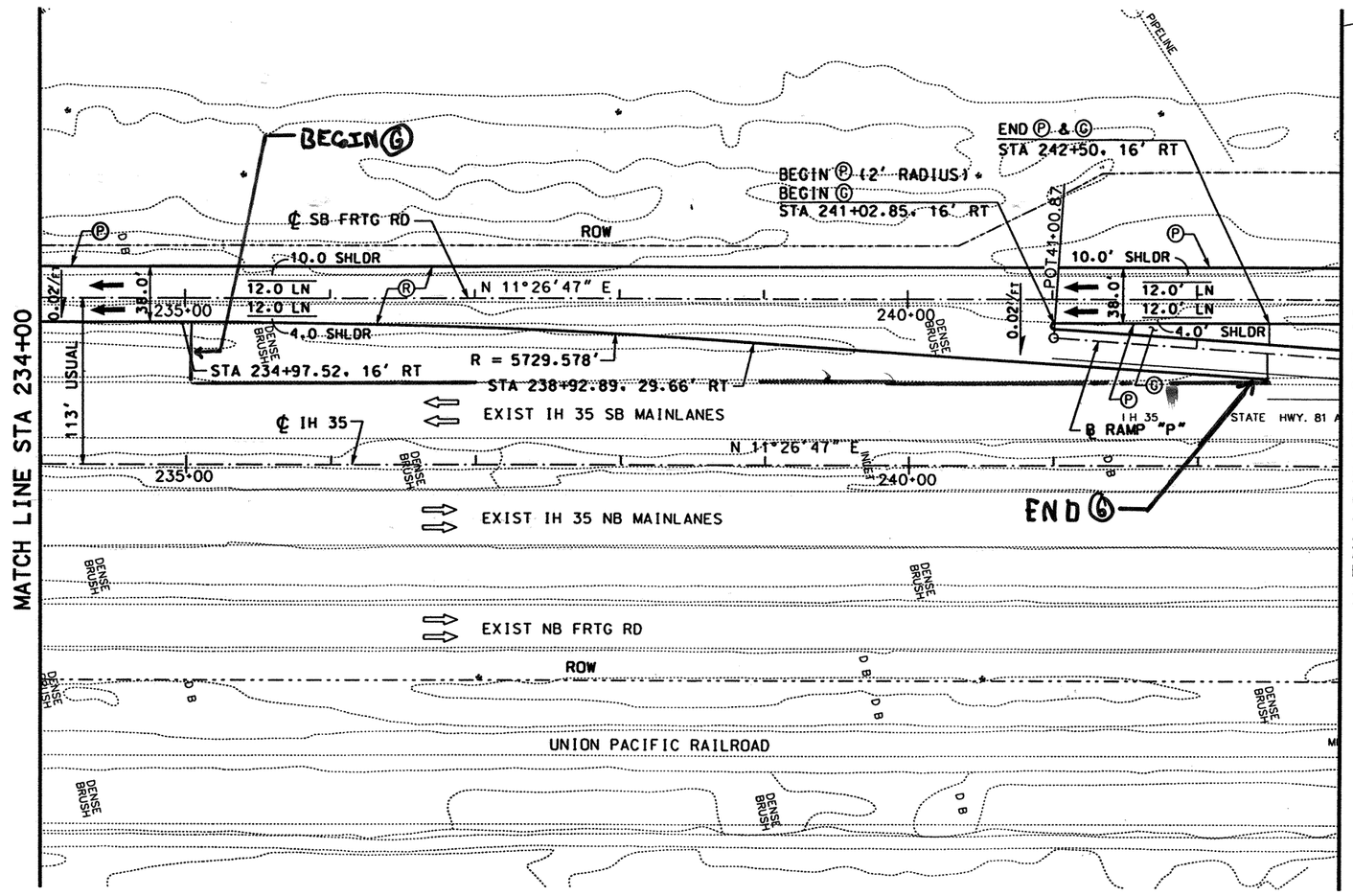

LEGEND:

- Ⓐ CONC PAV (CONT REINF HY STL)(12")
- Ⓑ ASPH CONC PAV (TY A)(4")
- Ⓒ LIME TREATED SUBGRADE (8")
- Ⓓ SINGLE SLOPE CONCRETE BARRIER (SSCB) (TYPE 2)
- Ⓔ TYPE II MONO CURB (6")
- Ⓕ CELL FIBER MULCH SEED (PERM) (RURAL)(CLAY)
- Ⓖ CLASS B RIPRAP (4")
- Ⓗ CONC SIDEWALK (4")
- Ⓘ CONC MEDIAN (6")
- Ⓙ SINGLE SLOPE TRAFFIC RAIL(SSTR) w/ DRAIN SLOTS
- Ⓚ RETAINING WALL
- Ⓛ METAL BEAM GUARD FENCE
- Ⓜ BRICK PAVERS
- Ⓝ REMOVE ASPH CONC PAV
- Ⓞ REMOVE CONC PAV
- Ⓟ TYPE II CURB AND GUTTER (6")
- Ⓠ CONCRETE DRIVEWAYS (6")
- Ⓡ ASPH CONC PAV (TY D)(2")
- Ⓢ ASPH CONC PAV (TY A)(8")
- Ⓣ PLANE ASPH CONC PAV (0 - 1")
- Ⓤ SINGLE SLOPE TRAFFIC RAIL (SSTR)
- Ⓥ CHAINLINK FENCE (6')
- Ⓦ ROADWAY UNDERDRAIN
- Ⓧ WHEELCHAIR RAMP TYPE B

NOTES:

1. SEE "GEOMETRIC DATA SUMMARY" FOR ALIGNMENT DATA.
2. SEE "RAMP "P" PLAN AND PROFILE" FOR MORE DETAILS.
3. SEE "REMOVAL LAYOUT" FOR MORE DETAILS.

STATE OF TEXAS
DERRON S. VINCIK
84028
REGISTERED PROFESSIONAL ENGINEER

The seal appearing on this document was authorized by Derron S. Vincik P.E. 84028, on April 2, 1999.

Derron S. Vincik

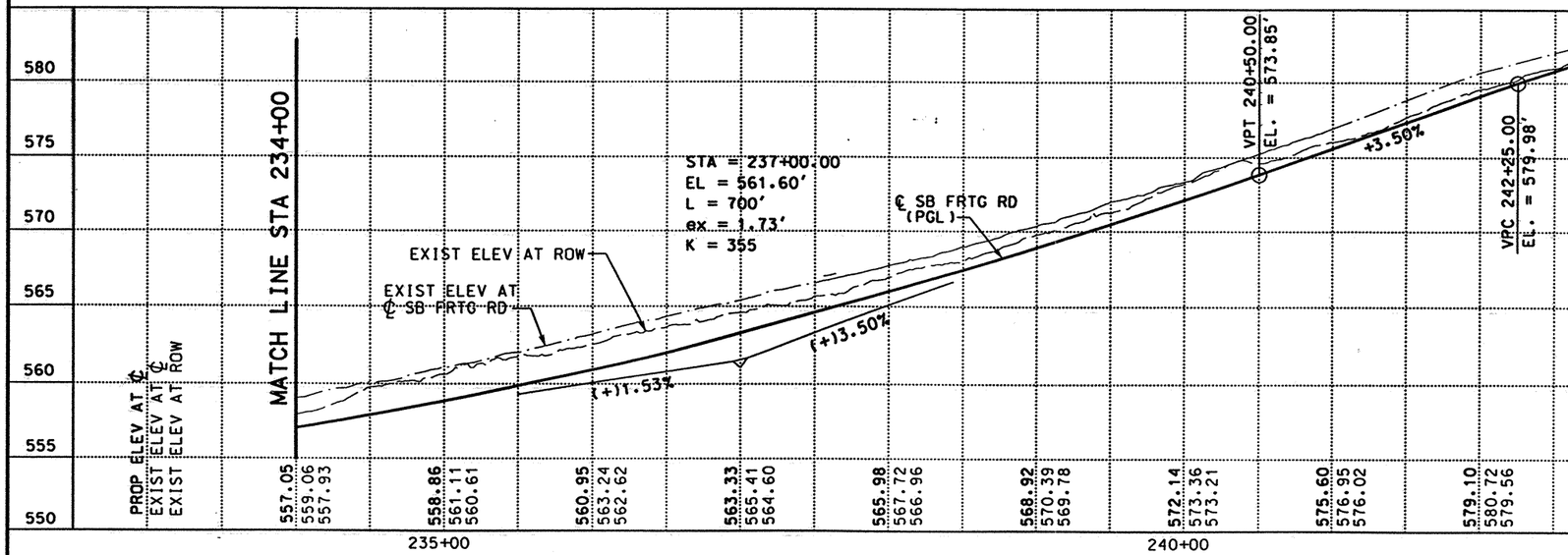

DATE	BY	REV	REVISION

© 1999 Texas Department of Transportation

Brown & Root
HOUSTON, TEXAS

IH 35
SOUTHBOUND FRONTAGE ROAD

PLAN AND PROFILE
STA 234+00 TO STA 243+00

0 50 100
SCALE: 1"=100' HORIZ
1"=10' VERT

SHEET 13 OF 14

FED RD DIV NO	STATE PROJECT NO	SHEET NO
6	NH-99(462)	303

STATE	STATE DIST NO	COUNTY
TEXAS	22	WEBB

CONT	SECT	JOB	HIGHWAY NO
0018	06	131	IH 35

REF FILE(S): IH35NMI.BCK, NMI LV ON = 2-30
J01LOX01.PRO, PRO LV ON = 1-63
J01LOX01.UTI, UTI LV ON = 1-63
J01LOX01.ILL, ILL LV ON = 20
J01LOX01.FND, FND LV ON = 35
J01LOX01.DRN, DRN LV ON = 8

REF FILE(S): J01LOX01.ROW, ROW LV ON = 1-23.25-61.63
J01LOX01.BCK, BCK LV ON = 2-30
J01LOX01.EOP, EOP LV ON = 1-11.13-17.19-27.29-41.43-53.5
J01LOX01.EOP, ALG LV ON = 1-44
J01LOX01.BDR, BDR LV ON = 5.10.15.35.45.46.57.60-62

BAR_HO_ES05 \HCIVIL\CF0039\PHASE2 03-08-99 D03FSX16.DGN-03

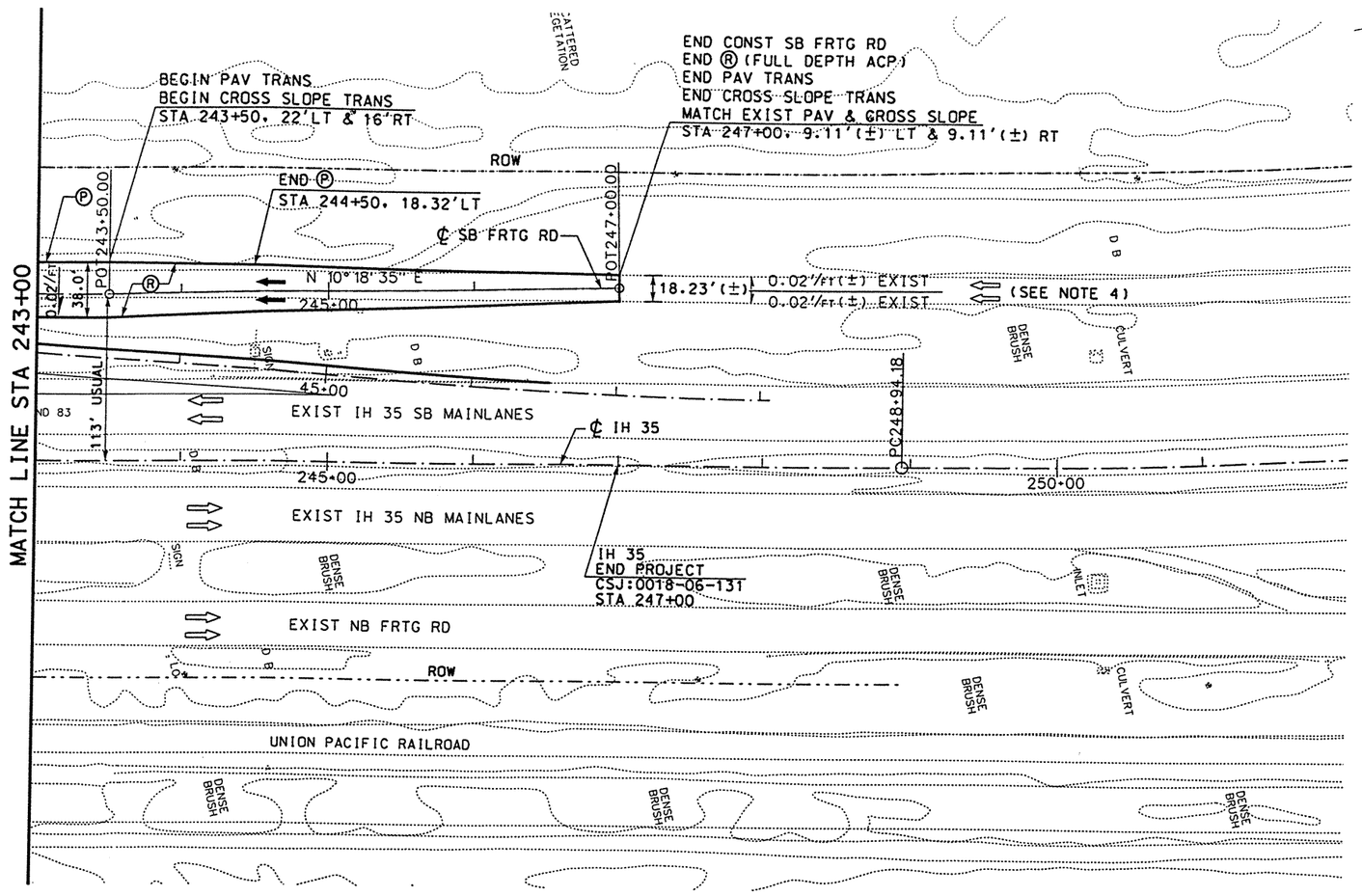

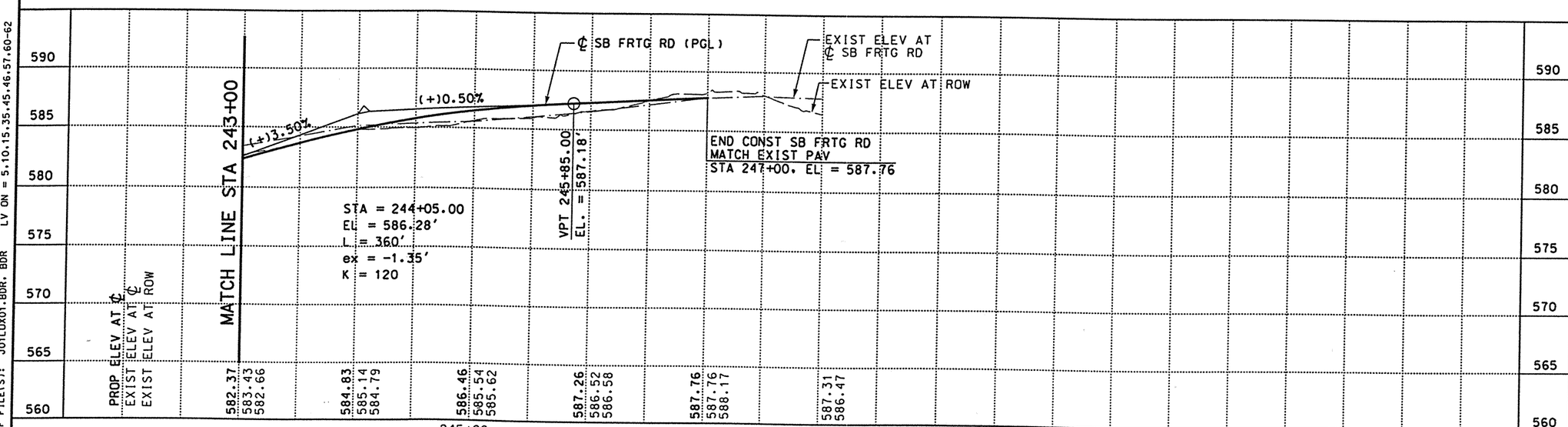

LEGEND:

- Ⓐ CONC PAV (CONT REINF HY STL)(12")
- Ⓑ ASPH CONC PAV (TY A)(4")
- Ⓒ LIME TREATED SUBGRADE (8")
- Ⓓ SINGLE SLOPE CONCRETE BARRIER (SSCB) (TYPE 2)
- Ⓔ TYPE II MONO CURB (6")
- Ⓕ CELL FIBER MULCH SEED (PERM) (RURAL)(CLAY)
- Ⓖ CLASS B RIPRAP (4")
- Ⓗ CONC SIDEWALK (4")
- Ⓘ CONC MEDIAN (6")
- Ⓙ SINGLE SLOPE TRAFFIC RAIL(SSTR) w/ DRAIN SLOTS
- Ⓚ RETAINING WALL
- Ⓛ METAL BEAM GUARD FENCE
- Ⓜ BRICK PAVERS
- Ⓝ REMOVE ASPH CONC PAV
- Ⓞ REMOVE CONC PAV
- Ⓟ TYPE II CURB AND GUTTER (6")
- Ⓠ CONCRETE DRIVEWAYS (6")
- Ⓡ ASPH CONC PAV (TY D)(2")
- Ⓢ ASPH CONC PAV (TY A)(8")
- Ⓣ PLANE ASPH CONC PAV (0 - 1")
- Ⓤ SINGLE SLOPE TRAFFIC RAIL (SSTR)
- Ⓥ CHAINLINK FENCE (6')
- Ⓦ ROADWAY UNDERDRAIN
- Ⓧ WHEELCHAIR RAMP TYPE B

NOTES:

1. SEE "GEOMETRIC DATA SUMMARY" FOR ALIGNMENT DATA.
2. SEE "RAMP "P" PLAN AND PROFILE" FOR MORE DETAILS.
3. SEE "REMOVAL LAYOUT" FOR MORE DETAILS.
4. THE EXISTING, WEST IH 35 FRONTAGE ROAD WILL BE RE-STRIPED, BY OTHERS, TO ACCOMMODATE ONE-WAY TRAFFIC, PRIOR TO THE CONSTRUCTION OF THE PROPOSED IH 35 SOUTHBOUND FRONTAGE ROAD.

STATE OF TEXAS
DERRON S. VINCIK
84028
REGISTERED PROFESSIONAL ENGINEER

The seal appearing on this document was authorized by Derron S. Vincik P.E. 84028, on June 3, 1999.

Derron S. Vincik

DATE	BY	REV	REVISION
6/3/99	DV	01	NOTES

© 1999 Texas Department of Transportation

Brown & Root
HOUSTON, TEXAS

IH 35
SOUTHBOUND FRONTAGE ROAD

PLAN AND PROFILE
STA 243+00 TO END

0 50 100
SCALE: 1"=100' HORIZ
1"=10' VERT

SHEET 14 OF 14

FED RD DIV NO	STATE PROJECT NO	SHEET NO
6	NH-99(462)	304

STATE	STATE DIST NO	COUNTY
TEXAS	22	WEBB

CONT	SECT	JOB	HIGHWAY NO
0018	06	131	IH 35

REV. 6-25-99

REF FILE(S): IH35NWI.BCK, NMI LV ON = 2-30
J01LOX01.PRO, PRO LV ON = 1-63
J01LOX01.UTI, UTI LV ON = 1-63
J01LOX01.ILL, ILL LV ON = 20
J01LOX01.FND, FND LV ON = 35
J01LOX01.DRN, DRN LV ON = 8

REF FILE(S): J01LOX01.ROW, ROW LV ON = 1-23,25-61,63
J01LOX01.BCK, BCK LV ON = 2-30
J01LOX01.EOP, EOP LV ON = 1-11,13-17,19-27,29-41,43-53,5
J01LOX01.EOP, ALG LV ON = 1-44
J01LOX01.BDR, BDR LV ON = 5,10,15,35,45,46,57,60-62

D03FSX17.DGN-03 06-02-99 BAR_HO_ES05 \HCIVIL\CF0039\PHASE2

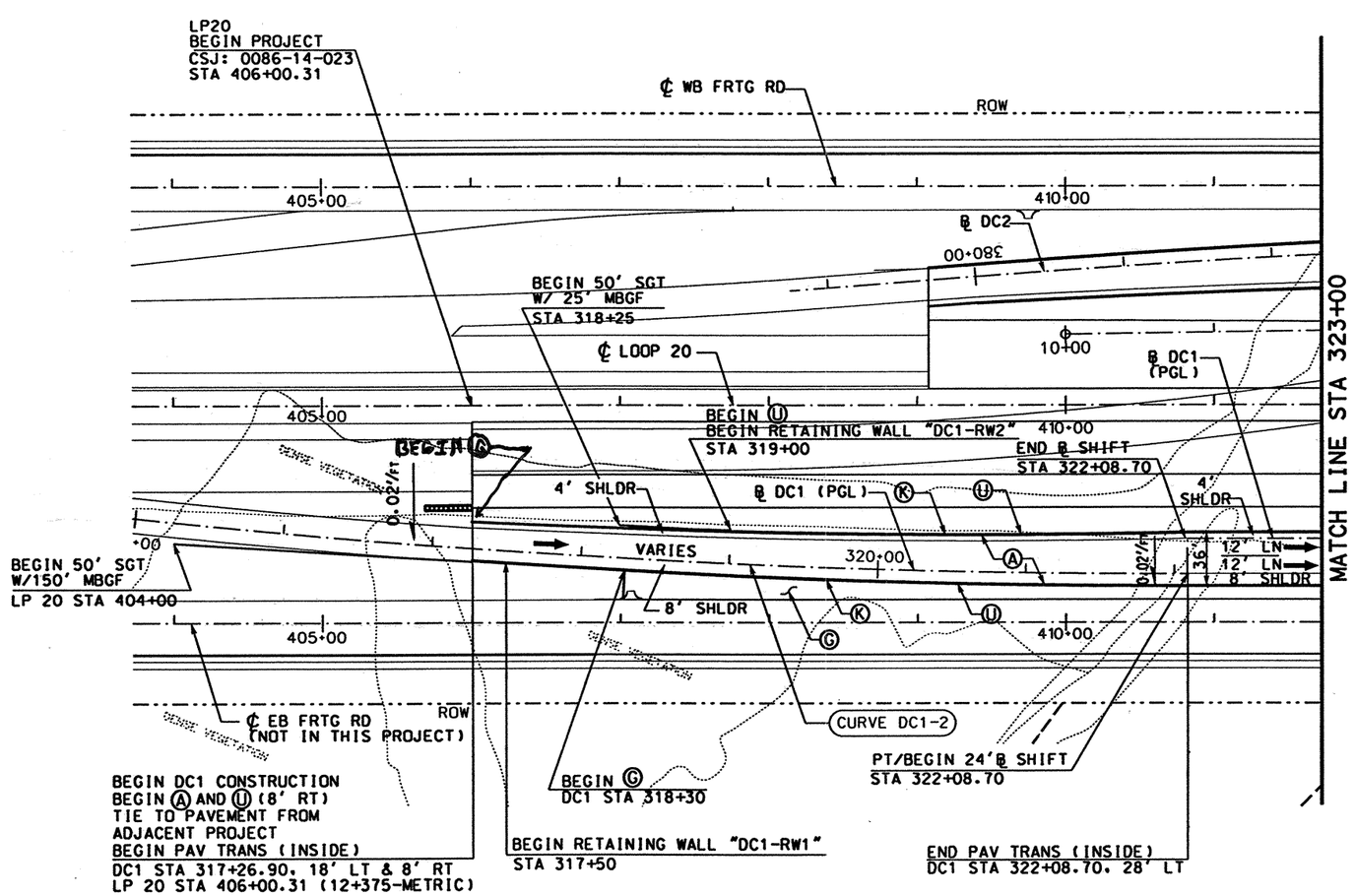

LEGEND:

- Ⓐ CONC PAV (CONT REINF HY STL)(12")
- Ⓑ ASPH CONC PAV (TY A)(4")
- Ⓒ LIME TREATED SUBGRADE (8")
- Ⓓ SINGLE SLOPE CONCRETE BARRIER (SSCB) (TYPE 2)
- Ⓔ TYPE II MONO CURB (6")
- Ⓕ CELL FIBER MULCH SEED (PERM) (RURAL)(CLAY)
- Ⓖ CLASS B RIPRAP (4")
- Ⓗ CONC SIDEWALK (4")
- Ⓘ CONC MEDIAN (6")
- Ⓙ SINGLE SLOPE TRAFFIC RAIL(SSTR) w/ DRAIN SLOTS
- Ⓚ RETAINING WALL
- Ⓛ METAL BEAM GUARD FENCE
- Ⓜ BRICK PAVERS
- Ⓝ REMOVE ASPH CONC PAV
- Ⓞ REMOVE CONC PAV
- Ⓟ TYPE II CURB AND GUTTER (6")
- Ⓠ CONCRETE DRIVEWAYS (6")
- Ⓡ ASPH CONC PAV (TY D)(2")
- Ⓢ ASPH CONC PAV (TY A)(8")
- Ⓣ PLANE ASPH CONC PAV (0 - 1")
- Ⓤ SINGLE SLOPE TRAFFIC RAIL (SSTR)
- Ⓥ CHAINLINK FENCE (6')
- Ⓦ ROADWAY UNDERDRAIN
- Ⓧ WHEELCHAIR RAMP TYPE B

NOTES:

1. SEE "GEOMETRIC DATA SUMMARY" FOR ALIGNMENT DATA.
2. SEE "LOOP 20 MAINLANE PLAN AND PROFILE" FOR MORE INFORMATION.
3. SEE "DC1 RETAINING WALL LAYOUTS" FOR DETAILS.
4. SEE "SIGNING AND PAVEMENT MARKING LAYOUTS" FOR APPROPRIATE ONE-LANE CONFIGURATION.

STATE OF TEXAS
DERRON S. VINCIK
84028
REGISTERED PROFESSIONAL ENGINEER

The seal appearing on this document was authorized by Derron S. Vincik P.E. 84028, on April 2, 1999.

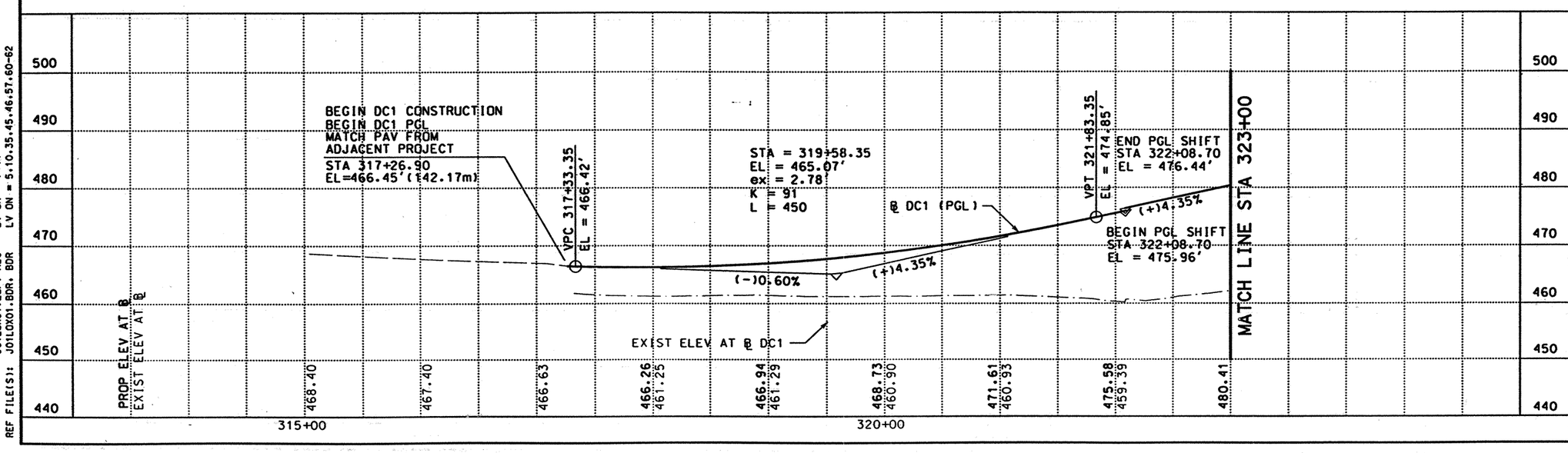

DATE	BY	REV	REVISION

© 1999 Texas Department of Transportation

Brown & Root
HOUSTON, TEXAS

LOOP 20
DIRECT CONNECTOR 1

PLAN AND PROFILE
STA 311+83.95 TO
STA 320+00

0 50 100
SCALE: 1"=100' HORIZ
1"=20' VERT

SHEET 1 OF 7

FED RD DIV NO	STATE PROJECT NO	SHEET NO
6	C86-14-23	305

STATE	STATE DIST NO	COUNTY
TEXAS	22	WEBB

CONT	SECT	JOB	HIGHWAY NO
0086	14	023	LOOP 20

REF FILE(S): J01LOX01.PRO, J01LOX01.UTI, J01LOX01.ILL, J01LOX01.FND, J01LOX01.DRN, J01LOX01.BCK, J01LOX01.EOP, J01LOX01.ALG, J01LOX01.BDR

LV ON = 1-63, LV ON = 1-63, LV ON = 20, LV ON = 35, LV ON = 8, LV ON = 1-30, LV ON = 1-11,13-17,19-27,29-41,43-53,5, LV ON = 1-44, LV ON = 5,10,35,45,46,57,60-62

03-06-99 BAR_HO_ES05 \HCIVIL\CF0039\PHASE2 D03C1X01.DGN-07

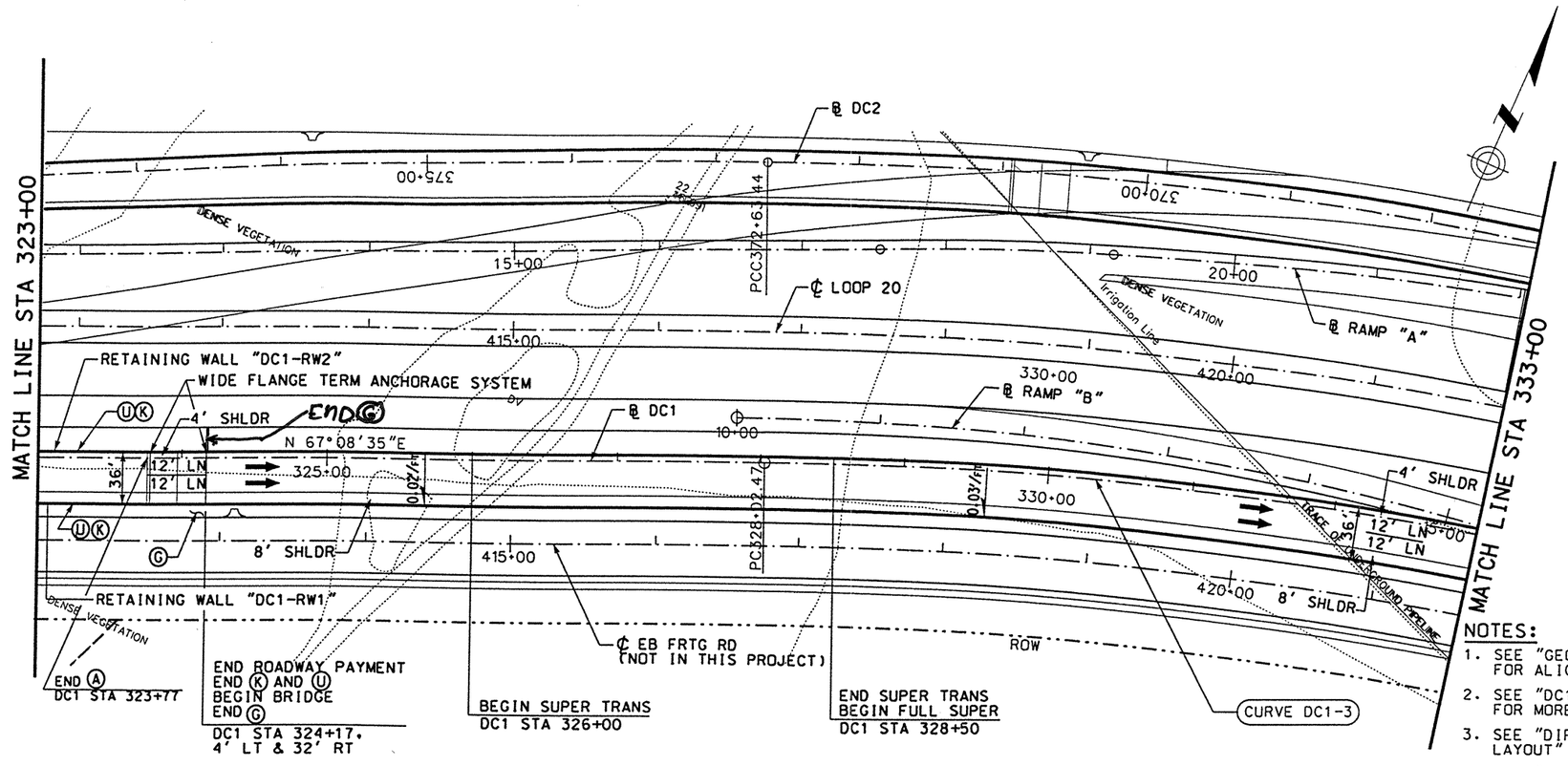

LEGEND:

- Ⓐ CONC PAV (CONT REINF HY STL)(12")
- Ⓑ ASPH CONC PAV (TY A)(4")
- Ⓒ LIME TREATED SUBGRADE (8")
- Ⓓ SINGLE SLOPE CONCRETE BARRIER (SSCB) (TYPE 2)
- Ⓔ TYPE II MONO CURB (6")
- Ⓕ CELL FIBER MULCH SEED (PERM) (RURAL)(CLAY)
- Ⓖ CLASS B RIPRAP (4")
- Ⓗ CONC SIDEWALK (4")
- Ⓘ CONC MEDIAN (6")
- Ⓙ SINGLE SLOPE TRAFFIC RAIL(SSTR) w/ DRAIN SLOTS
- Ⓚ RETAINING WALL
- Ⓛ METAL BEAM GUARD FENCE
- Ⓜ BRICK PAVERS
- Ⓝ REMOVE ASPH CONC PAV
- Ⓞ REMOVE CONC PAV
- Ⓟ TYPE II CURB AND GUTTER (6")
- Ⓠ CONCRETE DRIVEWAYS (6")
- Ⓡ ASPH CONC PAV (TY D)(2")
- Ⓢ ASPH CONC PAV (TY A)(8")
- Ⓣ PLANE ASPH CONC PAV (0 - 1")
- Ⓤ SINGLE SLOPE TRAFFIC RAIL (SSTR)
- Ⓥ CHAINLINK FENCE (6')
- Ⓦ ROADWAY UNDERDRAIN
- Ⓧ WHEELCHAIR RAMP TYPE B

NOTES:

1. SEE "GEOMETRIC DATA SUMMARY" FOR ALIGNMENT DATA.
2. SEE "DC1 RETAINING WALL LAYOUT" FOR MORE DETAILS.
3. SEE "DIRECT CONNECTOR #1 BRIDGE LAYOUT" FOR MORE DETAILS.
4. DEE "SIGNING AND PAVEMENT MARKING LAYOUTS" FOR APPROPRIATE ONE-LANE CONFIGURATION.

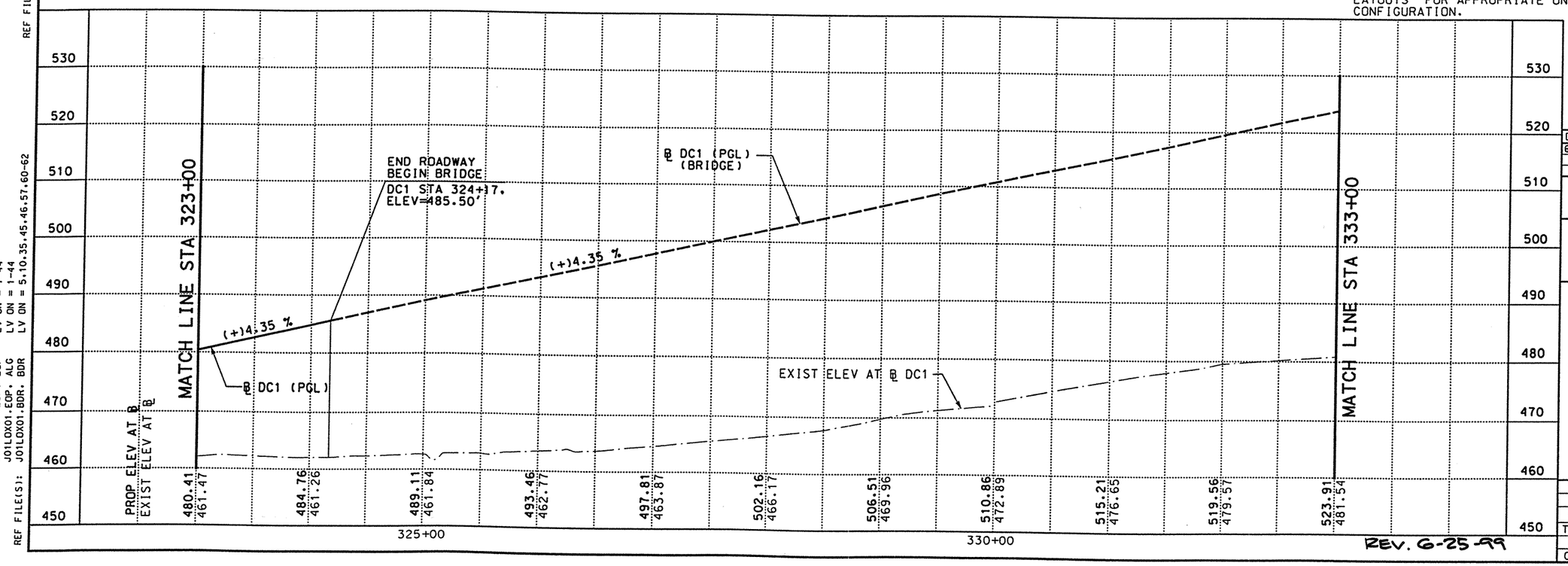

REV. 6-25-99

STATE OF TEXAS
DERRON S. VINCIK
P.E. 84028
REGISTERED PROFESSIONAL ENGINEER

The seal appearing on this document was authorized by Derron S. Vincik P.E. 84028, on June 3, 1999.

DATE	BY	REV	REVISION
6/3/99	DV	01	CALLOUT

© 1999 Texas Department of Transportation

Brown & Root
HOUSTON, TEXAS

LOOP 20
DIRECT CONNECTOR 1

PLAN AND PROFILE
STA 323+00 TO STA 333+00

0 50 100
SCALE: 1"=100' HORZ
1"=20' VERT

SHEET 2 OF 7

FED RD DIV NO	STATE PROJECT NO		SHEET NO
6	C86-14-23		306
STATE	STATE DIST NO	COUNTY	
TEXAS	22	WEBB	
CONT	SECT	JOB	HIGHWAY NO
0086	14	023	LOOP 20

J01LOX01.PRO, PRO LV ON = 1-63
J01LOX01.UTI, UTI LV ON = 1-63
J01LOX01.ILL, ILL LV ON = 20
J01LOX01.FND, FND LV ON = 35
J01LOX01.DRN, DRN LV ON = 8
REF FILE(S):

J01LOX01.BCK, BCK LV ON = 1-30
J01LOX01.EOP, EOP LV ON = 1-44
J01LOX01.EOP, ALG LV ON = 1-44
J01LOX01.BDR, BDR LV ON = 5,10,35,45,46,57,60-62
REF FILE(S):

D03C1X02.DGN-06 05-28-99 BAR_HO_ES05 \HCIVIL\CF0039\PHASE2

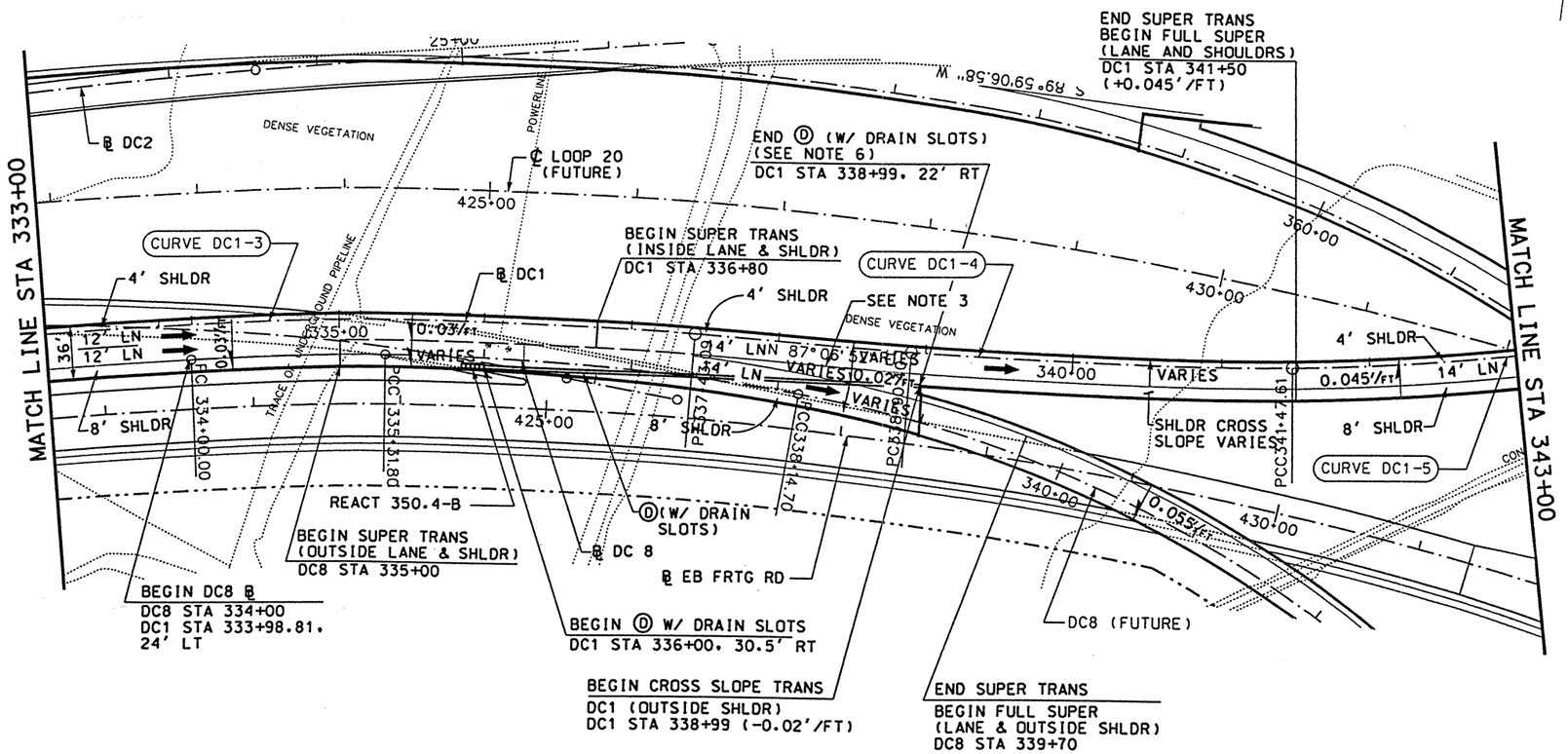

LEGEND:

- Ⓐ CONC PAV (CONT REINF HY STL)(12")
- Ⓑ ASPH CONC PAV (TY A)(4")
- Ⓒ LIME TREATED SUBGRADE (8")
- Ⓓ SINGLE SLOPE CONCRETE BARRIER (SSCB) (TYPE 2)
- Ⓔ TYPE II MONO CURB (6")
- Ⓕ CELL FIBER MULCH SEED (PERM) (RURAL)(CLAY)
- Ⓖ CLASS B RIPRAP (4")
- Ⓗ CONC SIDEWALK (4")
- Ⓘ CONC MEDIAN (6")
- Ⓙ SINGLE SLOPE TRAFFIC RAIL(SSTR) w/ DRAIN SLOTS
- Ⓚ RETAINING WALL
- Ⓛ METAL BEAM GUARD FENCE
- Ⓜ BRICK PAVERS
- Ⓝ REMOVE ASPH CONC PAV
- Ⓞ REMOVE CONC PAV
- Ⓟ TYPE II CURB AND GUTTER (6")
- Ⓠ CONCRETE DRIVEWAYS (6")
- Ⓡ ASPH CONC PAV (TY D)(2")
- Ⓢ ASPH CONC PAV (TY A)(8")
- Ⓣ PLANE ASPH CONC PAV (0 - 1")
- Ⓤ SINGLE SLOPE TRAFFIC RAIL (SSTR)
- Ⓥ CHAINLINK FENCE (6')
- Ⓦ ROADWAY UNDERDRAIN
- Ⓧ WHEELCHAIR RAMP TYPE B

NOTES:

1. SEE "GEOMETRIC DATA SUMMARY" FOR ALIGNMENT DATA.
2. SEE "DIRECT CONNECTOR #1 BRIDGE LAYOUT" FOR MORE DETAILS.
3. SEE "DIRECT CONNECTOR #1 GORE DETAILS" (pp 522B-522D) FOR MORE INFORMATION.
4. SEE " SIGNING AND PAVEMENT MARKING LAYOUT" FOR APPROPRIATE ONE-LANE CONFIGURATION.
5. ITEM Ⓓ SHALL BE CONSIDERED AS TEMPORARY INSTALLATION, AND SHALL BE PAID FOR AS A ROADWAY ITEM.
6. CONNECT Ⓓ TO BRIDGE RAIL WITH MBGF. SEE CONNECTION DETAIL FROM SINGLE SLOPE TRAFFIC RAILING STANDARD (TYPE SSTR).

REV. 6-25-99

STATE OF TEXAS
DERRON S. VINCIK
84028
REGISTERED PROFESSIONAL ENGINEER

The seal appearing on this document was authorized by Derron S. Vincik P.E. 84028, on June 3, 1999.

DATE	BY	REV	REVISION
6/03/99	DV	01	NOTES

© 1999 Texas Department of Transportation

Brown & Root
HOUSTON, TEXAS

IH 35
DIRECT CONNECTOR 1

PLAN AND PROFILE
STA 333+00 TO STA 343+00

0 50 100
SCALE: 1"=100' HORZ
1"=20' VERT

SHEET 3 OF 7

FED RD DIV NO	STATE PROJECT NO		SHEET NO
6	NH-99(462)		307
STATE	STATE DIST NO	COUNTY	
TEXAS	22	WEBB	
CONT	SECT	JOB	HIGHWAY NO
0018	06	131	IH 35

D03CIX03.DGN-07 06-02-99 BAR_HO_ES05 \HCIVIL\CF0039\PHASE2

REF FILE(S): J01LOX01.BCK, BCK LV ON = J01LOX01.EOP, EOP LV ON = 1-30 J01LOX01.EOP, ALG LV ON = 1-44 J01LOX01.BDR, BDR LV ON = 5,10,35,45,46,57,60-62

REF FILE(S): J01LOX01.PRO, PRO LV ON = J01LOX01.UTI, UTI LV ON = 1-11,13-17,19-27,29-41,43-53,5 J01LOX01.ILL, ILL LV ON = 1-63 J01LOX01.FND, FND LV ON = 20 J01LOX01.DRN, DRN LV ON = 35 J01LOX01.DRN, DRN LV ON = 8

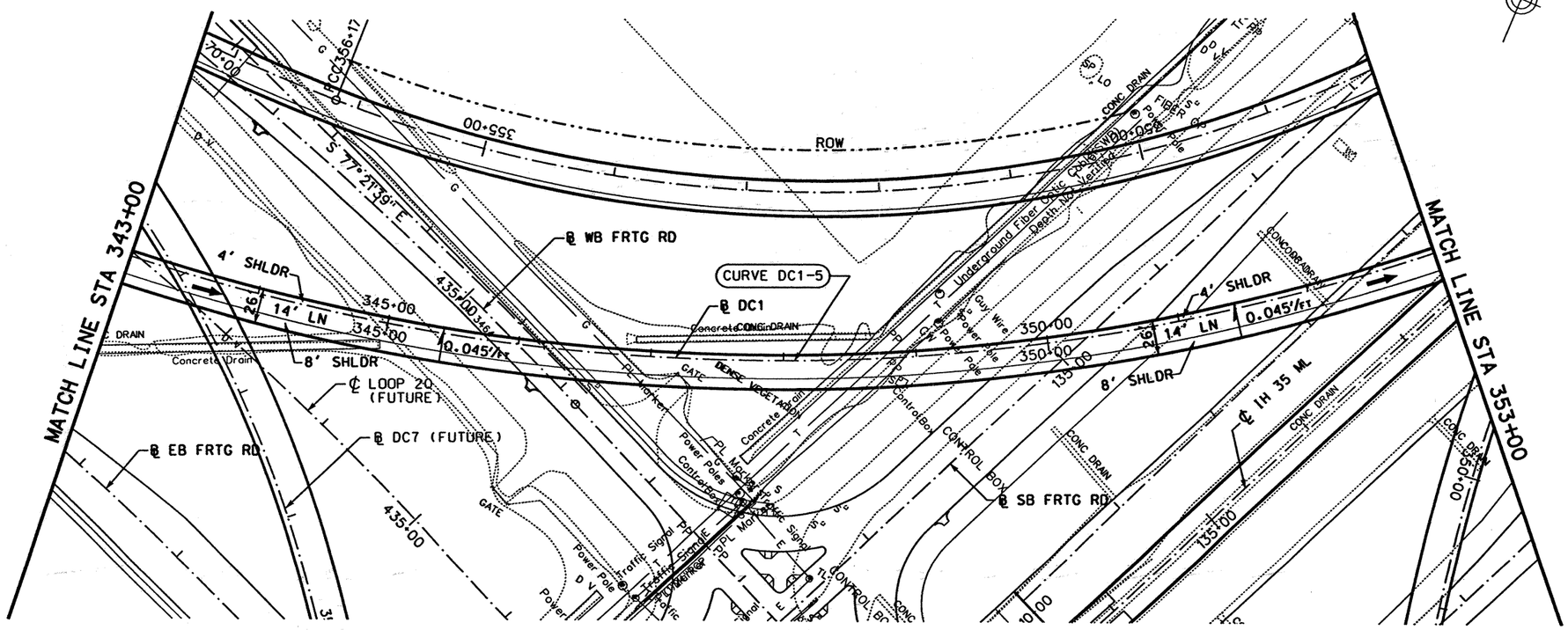

LEGEND:

- Ⓐ CONC PAV (CONT REINF HY STL)(12")
- Ⓑ ASPH CONC PAV (TY A)(4")
- Ⓒ LIME TREATED SUBGRADE (8")
- Ⓓ SINGLE SLOPE CONCRETE BARRIER (SSCB) (TYPE 2)
- Ⓔ TYPE II MONO CURB (6")
- Ⓕ CELL FIBER MULCH SEED (PERM) (RURAL)(CLAY)
- Ⓖ CLASS B RIPRAP (4")
- Ⓗ CONC SIDEWALK (4")
- Ⓘ CONC MEDIAN (6")
- Ⓙ SINGLE SLOPE TRAFFIC RAIL(SSTR) w/ DRAIN SLOTS
- Ⓚ RETAINING WALL
- Ⓛ METAL BEAM GUARD FENCE
- Ⓜ BRICK PAVERS
- Ⓝ REMOVE ASPH CONC PAV
- Ⓞ REMOVE CONC PAV
- Ⓟ TYPE II CURB AND GUTTER (6")
- Ⓠ CONCRETE DRIVEWAYS (6")
- Ⓡ ASPH CONC PAV (TY D)(2")
- Ⓢ ASPH CONC PAV (TY A)(8")
- Ⓣ PLANE ASPH CONC PAV (0 - 1")
- Ⓤ SINGLE SLOPE TRAFFIC RAIL (SSTR)
- Ⓥ CHAINLINK FENCE (6')
- Ⓦ ROADWAY UNDERDRAIN
- Ⓧ WHEELCHAIR RAMP TYPE B

NOTES:

1. SEE "GEOMETRIC DATA SUMMARY" FOR ALIGNMENT DATA.
2. SEE "DIRECT CONNECTOR #1 BRIDGE LAYOUT" FOR MORE DETAILS.

STATE OF TEXAS
DERRON S. VINCIK
P.E. 84028
REGISTERED PROFESSIONAL ENGINEER

The seal appearing on this document was authorized by Derron S. Vincik P.E. 84028, on April 2, 1999.

DATE	BY	REV	REVISION

© 1999 Texas Department of Transportation

Brown & Root
HOUSTON, TEXAS

IH 35
DIRECT CONNECTOR 1

PLAN AND PROFILE
STA 343+00 TO STA 353+00

0 50 100
SCALE: 1"=100' HORZ
1"=20' VERT

SHEET 4 OF 7

FED RD DIV NO	STATE PROJECT NO		SHEET NO
6	NH-99(462)		308
STATE	STATE DIST NO	COUNTY	
TEXAS	22	WEBB	
CONT	SECT	JOB	HIGHWAY NO
0018	06	131	IH 35

REF FILE(S): J01LOX01.BDR, BDR LV ON = 5,10,35,45,46,57,60-62
J01LOX01.BCK, BCK LV ON = 1-30
J01LOX01.EOP, EOP LV ON = 1-11,13-17,19-27,29-41,43-53,5
J01LOX01.EOP, ALG LV ON = 1-44
J01LOX01.PRO, PRO LV ON = 1-63
J01LOX01.UTI, UTI LV ON = 1-63
J01LOX01.ILL, ILL LV ON = 20
J01LOX01.FND, FND LV ON = 35
J01LOX01.DRN, DRN LV ON = 8

D03CIX04.DGN-06 03-06-99 BAR_HO_ES05 \HCIVIL\CF0039\PHASE2

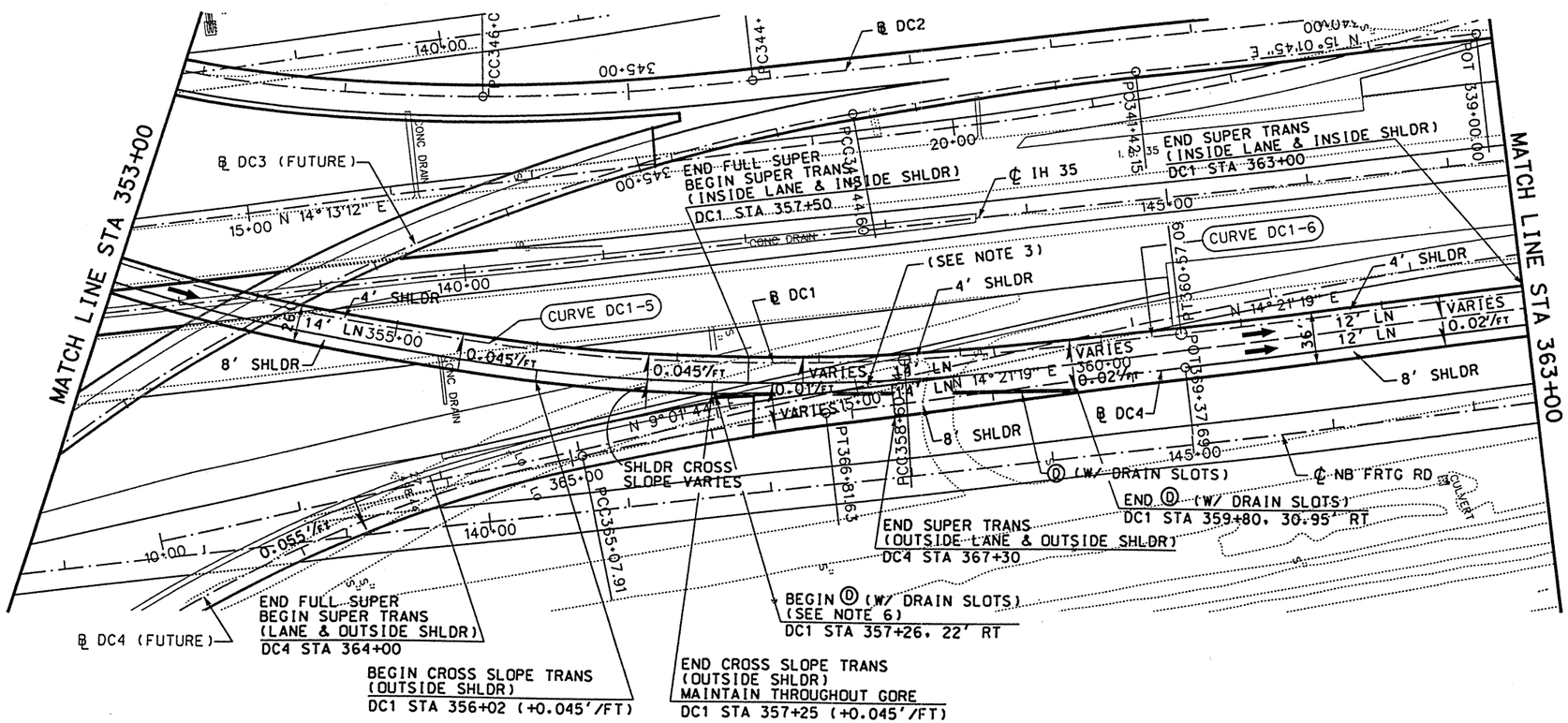

LEGEND:

- Ⓐ CONC PAV (CONT REINF HY STL)(12")
- Ⓑ ASPH CONC PAV (TY A)(4")
- Ⓒ LIME TREATED SUBGRADE (8")
- Ⓓ SINGLE SLOPE CONCRETE BARRIER (SSCB) (TYPE 2)
- Ⓔ TYPE II MONO CURB (6")
- Ⓕ CELL FIBER MULCH SEED (PERM) (RURAL)(CLAY)
- Ⓖ CLASS B RIPRAP (4")
- Ⓗ CONC SIDEWALK (4")
- Ⓘ CONC MEDIAN (6")
- Ⓙ SINGLE SLOPE TRAFFIC RAIL(SSTR) w/ DRAIN SLOTS
- Ⓚ RETAINING WALL
- Ⓛ METAL BEAM GUARD FENCE
- Ⓜ BRICK PAVERS
- Ⓝ REMOVE ASPH CONC PAV
- Ⓞ REMOVE CONC PAV
- Ⓟ TYPE II CURB AND GUTTER (6")
- Ⓠ CONCRETE DRIVEWAYS (6")
- Ⓡ ASPH CONC PAV (TY D)(2")
- Ⓢ ASPH CONC PAV (TY A)(8")
- Ⓣ PLANE ASPH CONC PAV (0 - 1")
- Ⓤ SINGLE SLOPE TRAFFIC RAIL (SSTR)
- Ⓥ CHAINLINK FENCE (6')
- Ⓦ ROADWAY UNDERDRAIN
- Ⓧ WHEELCHAIR RAMP TYPE B

NOTES:

1. SEE "GEOMETRIC DATA SUMMARY" FOR ALIGNMENT DATA.
2. SEE "DIRECT CONNECTOR #1 BRIDGE LAYOUT" FOR MORE DETAILS.
3. SEE "DIRECT CONNECTOR #1 GORE DETAILS" (pp 522B-522D) FOR MORE INFORMATION.
4. SEE "SIGNING AND PAVEMENT MARKING LAYOUT" FOR APPROPRIATE ONE-LANE CONFIGURATION.
5. ITEM Ⓓ SHALL BE CONSIDERED AS TEMPORARY INSTALLATION, AND SHALL BE PAID FOR AS A ROADWAY ITEM.
6. CONNECT Ⓓ TO BRIDGE RAIL WITH MBGF. SEE CONNECTION DETAIL FROM SINGLE SLOPE TRAFFIC RAILING STANDARD (TYPE SSTR).

REV. 6-25-99

STATE OF TEXAS
DERRON S. VINCIK
P.E. 84028
REGISTERED PROFESSIONAL ENGINEER

The seal appearing on this document was authorized by Derron S. Vincik P.E. 84028, on June 3, 1999.

DATE	BY	REV	REVISION
6/03/99	DV	01	NOTES

© 1999 Texas Department of Transportation

Brown & Root
HOUSTON, TEXAS

IH 35
DIRECT CONNECTOR 1

PLAN AND PROFILE
STA 353+00 TO STA 363+00

0 50 100
SCALE: 1"=100' HORIZ
1"=20' VERT

SHEET 5 OF 7

FED RD DIV NO	STATE PROJECT NO	SHEET NO
6	NH-99(462)	309

STATE	STATE DIST NO	COUNTY
TEXAS	22	WEBB

CONT	SECT	JOB	HIGHWAY NO
0018	06	131	IH 35

REF FILE(S): J01LOX01.PRO, PRO LV ON =
J01LOX01.UTI, UTI LV ON = 1-63
J01LOX01.ILL, ILL LV ON = 20
J01LOX01.FND, FND LV ON = 35
J01LOX01.DRN, DRN LV ON = 8

REF FILE(S): J01LOX01.BCK, BCK LV ON =
J01LOX01.EOP, EOP LV ON = 1-30
J01LOX01.EOP, ALG LV ON = 1-11,13-17,19-27,29-41,43-53,5
J01LOX01.EOP, BDR LV ON = 1-44
J01LOX01.BDR, BDR LV ON = 5,10,35,45,46,57,60-62

D03CIX05.DGN-07 06-02-99 BAR_HO_ES05 \HCIVIL\CF0039\PHASE2

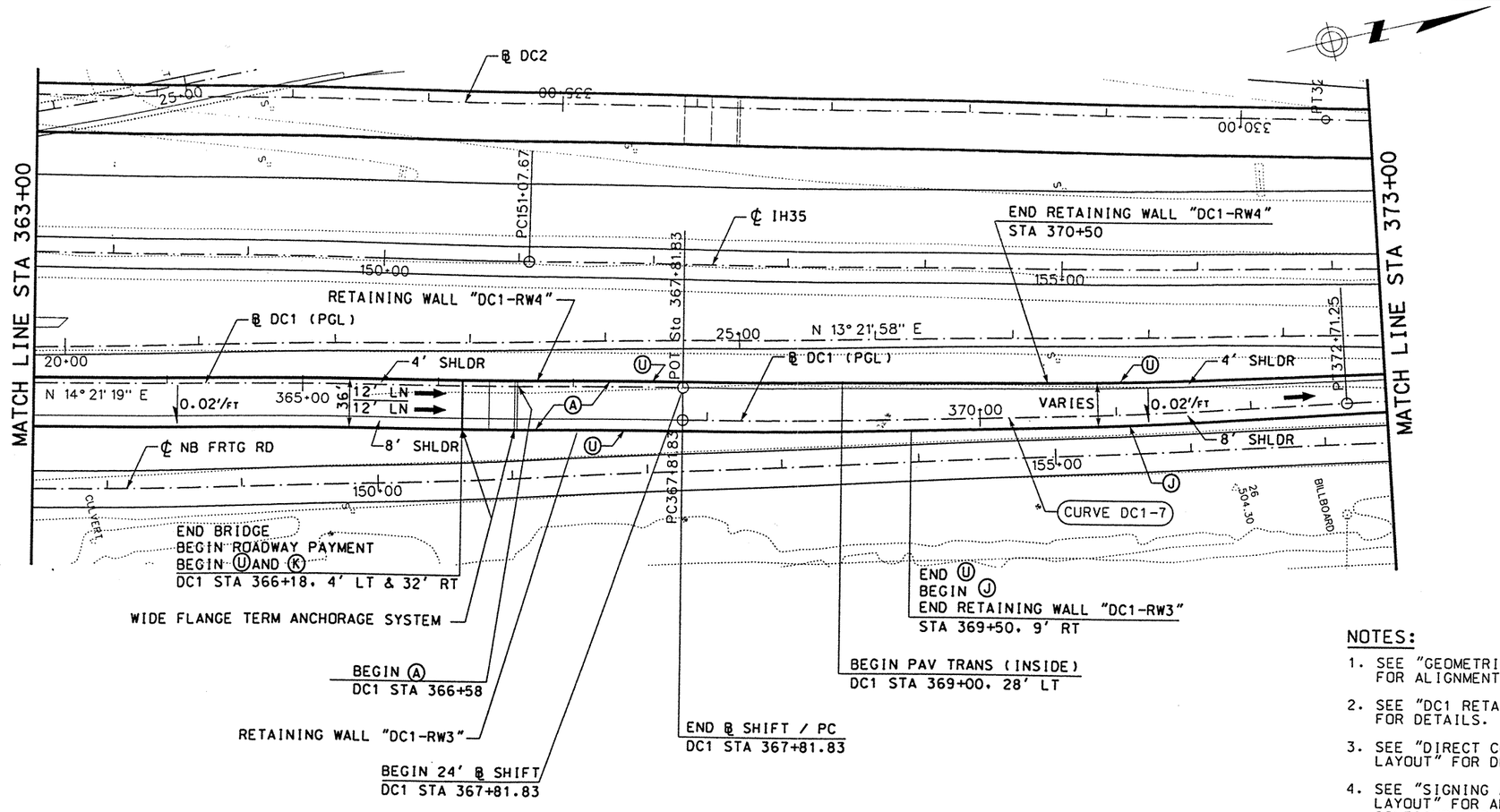

LEGEND:

- Ⓐ CONC PAV (CONT REINF HY STL)(12")
- Ⓑ ASPH CONC PAV (TY A)(4")
- Ⓒ LIME TREATED SUBGRADE (8")
- Ⓓ SINGLE SLOPE CONCRETE BARRIER (SSCB) (TYPE 2)
- Ⓔ TYPE II MONO CURB (6")
- Ⓕ CELL FIBER MULCH SEED (PERM) (RURAL)(CLAY)
- Ⓖ CLASS B RIPRAP (4")
- Ⓗ CONC SIDEWALK (4")
- Ⓘ CONC MEDIAN (6")
- Ⓙ SINGLE SLOPE TRAFFIC RAIL(SSTR) w/ DRAIN SLOTS
- Ⓚ RETAINING WALL
- Ⓛ METAL BEAM GUARD FENCE
- Ⓜ BRICK PAVERS
- Ⓝ REMOVE ASPH CONC PAV
- Ⓞ REMOVE CONC PAV
- Ⓟ TYPE II CURB AND GUTTER (6")
- Ⓠ CONCRETE DRIVEWAYS (6")
- Ⓡ ASPH CONC PAV (TY D)(2")
- Ⓢ ASPH CONC PAV (TY A)(8")
- Ⓣ PLANE ASPH CONC PAV (0 - 1")
- Ⓤ SINGLE SLOPE TRAFFIC RAIL (SSTR)
- Ⓥ CHAINLINK FENCE (6')
- Ⓦ ROADWAY UNDERDRAIN
- Ⓧ WHEELCHAIR RAMP TYPE B

NOTES:

1. SEE "GEOMETRIC DATA SUMMARY" FOR ALIGNMENT DATA.
2. SEE "DC1 RETAINING WALL LAYOUT" FOR DETAILS.
3. SEE "DIRECT CONNECTOR #1 BRIDGE LAYOUT" FOR DETAILS.
4. SEE "SIGNING AND PAVEMENT MARKING LAYOUT" FOR APPROPRIATE ONE-LANE CONFIGURATION.
5. SEE "NORTHBOUND FRONTAGE RD. PLAN AND PROFILE" FOR MORE DETAILS.

STATE OF TEXAS
DERRON S. VINCIK
84028
REGISTERED PROFESSIONAL ENGINEER

The seal appearing on this document was authorized by Derron S. Vincik P.E. 84028, on June 3, 1999.

Derron S. Vincik

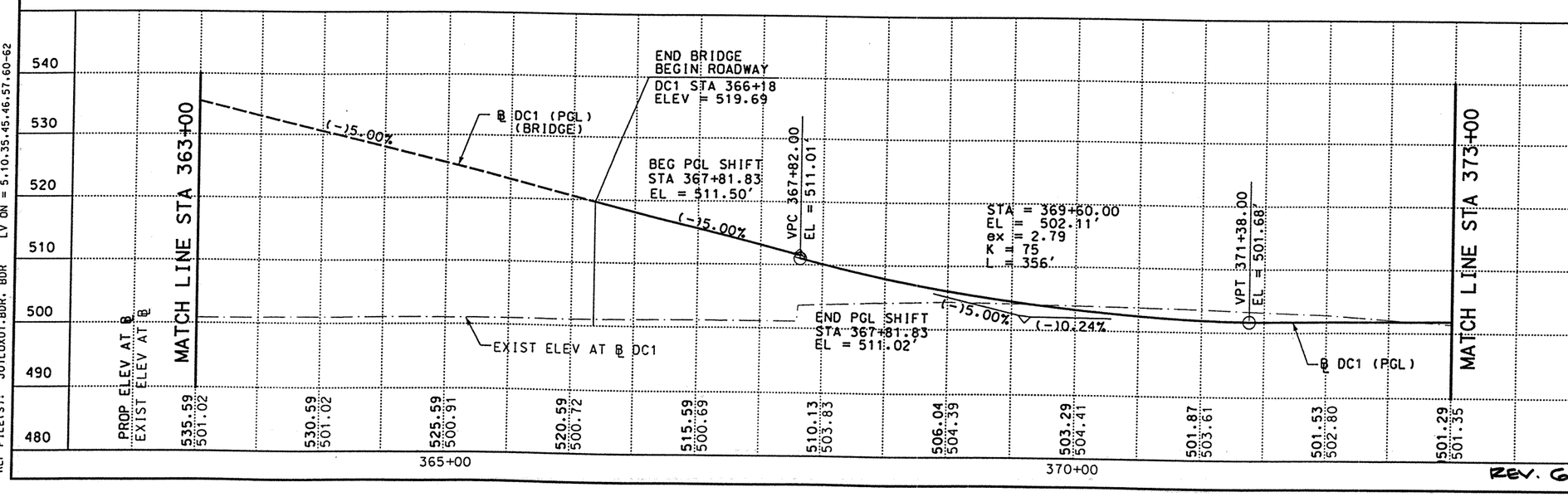

REV. 6-25-99

DATE	BY	REV	REVISION
6/3/99	DV	01	CALLOUT

© 1999 Texas Department of Transportation

Brown & Root
HOUSTON, TEXAS

IH 35
DIRECT CONNECTOR 1

PLAN AND PROFILE
STA 363+00 TO STA 373+00

0 50 100
SCALE: 1"=100' HORIZ
1"=20' VERT

SHEET 6 OF 7

FED RD DIV NO	STATE PROJECT NO	SHEET NO
6	NH-99(462)	310

STATE	STATE DIST NO	COUNTY
TEXAS	22	WEBB

CONT	SECT	JOB	HIGHWAY NO
0018	06	131	IH 35

D03CIX06.DGN-08 05-28-99 BAR_HO_ES05 \HCIVIL\CF0039\PHASE2

REF FILE(S): J01LOX01.PRO, PRO LV ON = 1-63
J01LOX01.UTI, UTI LV ON = 1-11,13-1...19-27,29-41,43-53,5
J01LOX01.ILL, ILL LV ON = 1-44
J01LOX01.FND, FND LV ON = 35
J01LOX01.DRN, DRN LV ON = 8

REF FILE(S): J01LOX01.BCK, BCK LV ON = 1-30
J01LOX01.EOP, EOP LV ON = 1-11,13-17,19-27,29-41,43-53,5
J01LOX01.EOP, ALG LV ON = 1-44
J01LOX01.BDR, BDR LV ON = 5,10,35,45,46,57,60-62

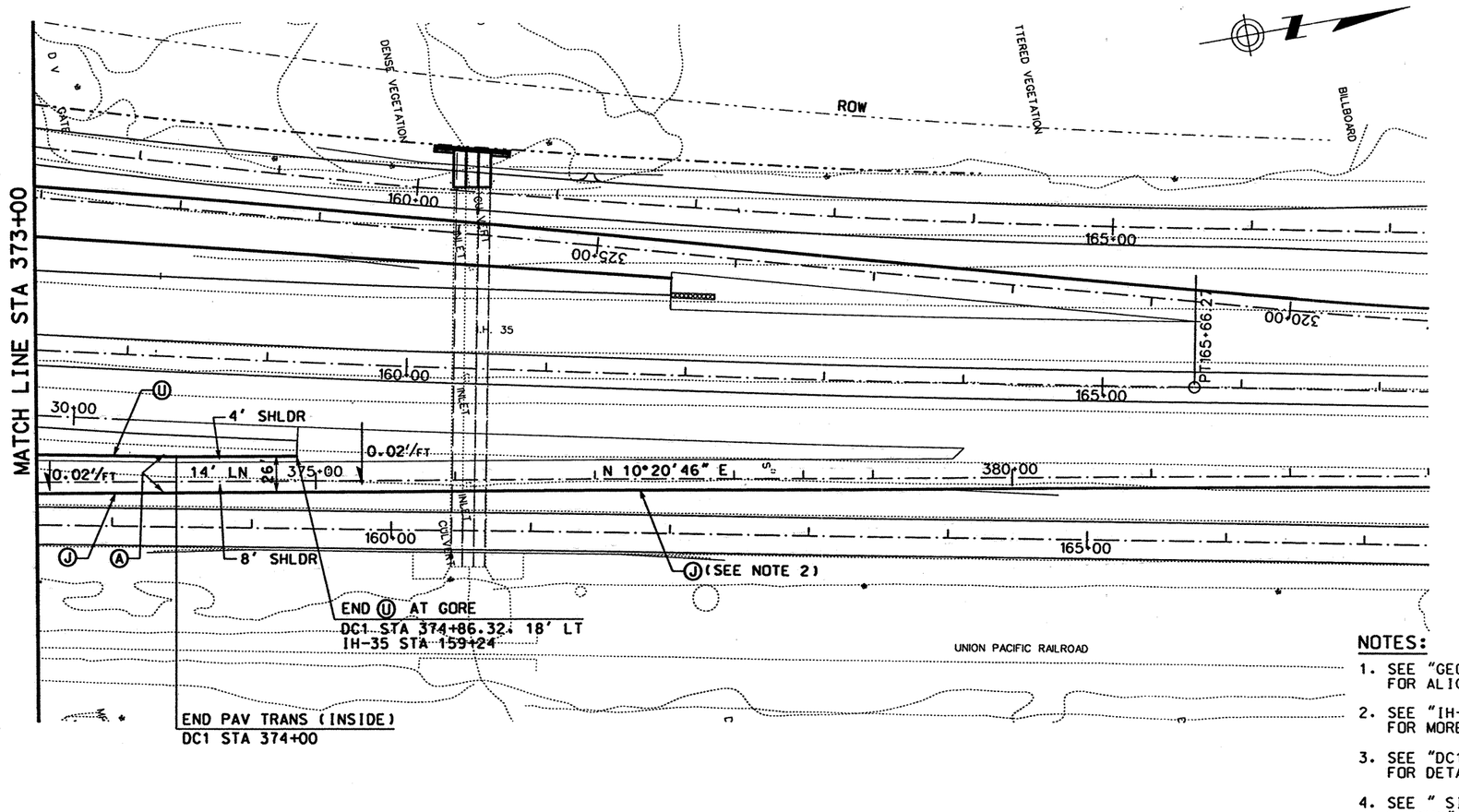

LEGEND:

- Ⓐ CONC PAV (CONT REINF HY STL)(12")
- Ⓑ ASPH CONC PAV (TY A)(4")
- Ⓒ LIME TREATED SUBGRADE (8")
- Ⓓ SINGLE SLOPE CONCRETE BARRIER (SSCB) (TYPE 2)
- Ⓔ TYPE II MONO CURB (6")
- Ⓕ CELL FIBER MULCH SEED (PERM) (RURAL)(CLAY)
- Ⓖ CLASS B RIPRAP (4")
- Ⓗ CONC SIDEWALK (4")
- Ⓘ CONC MEDIAN (6")
- Ⓙ SINGLE SLOPE TRAFFIC RAIL(SSTR) w/ DRAIN SLOTS
- Ⓚ RETAINING WALL
- Ⓛ METAL BEAM GUARD FENCE
- Ⓜ BRICK PAVERS
- Ⓝ REMOVE ASPH CONC PAV
- Ⓞ REMOVE CONC PAV
- Ⓟ TYPE II CURB AND GUTTER (6")
- Ⓠ CONCRETE DRIVEWAYS (6")
- Ⓡ ASPH CONC PAV (TY D)(2")
- Ⓢ ASPH CONC PAV (TY A)(8")
- Ⓣ PLANE ASPH CONC PAV (0 - 1")
- Ⓤ SINGLE SLOPE TRAFFIC RAIL (SSTR)
- Ⓥ CHAINLINK FENCE (6')
- Ⓦ ROADWAY UNDERDRAIN
- Ⓧ WHEELCHAIR RAMP TYPE B

NOTES:

1. SEE "GEOMETRIC DATA SUMMARY" FOR ALIGNMENT DATA.
2. SEE "IH-35 MAINLANE PLAN AND PROFILE" FOR MORE INFORMATION.
3. SEE "DC1 RETAINING WALL LAYOUT" FOR DETAILS.
4. SEE " SIGNING AND PAVEMENT MARKING LAYOUT" FOR APPROPRIATE ONE-LANE CONFIGURATION.
5. SEE "NORTHBOUND FRONTAGE RD PLAN AND PROFILE" FOR MORE DETAILS.

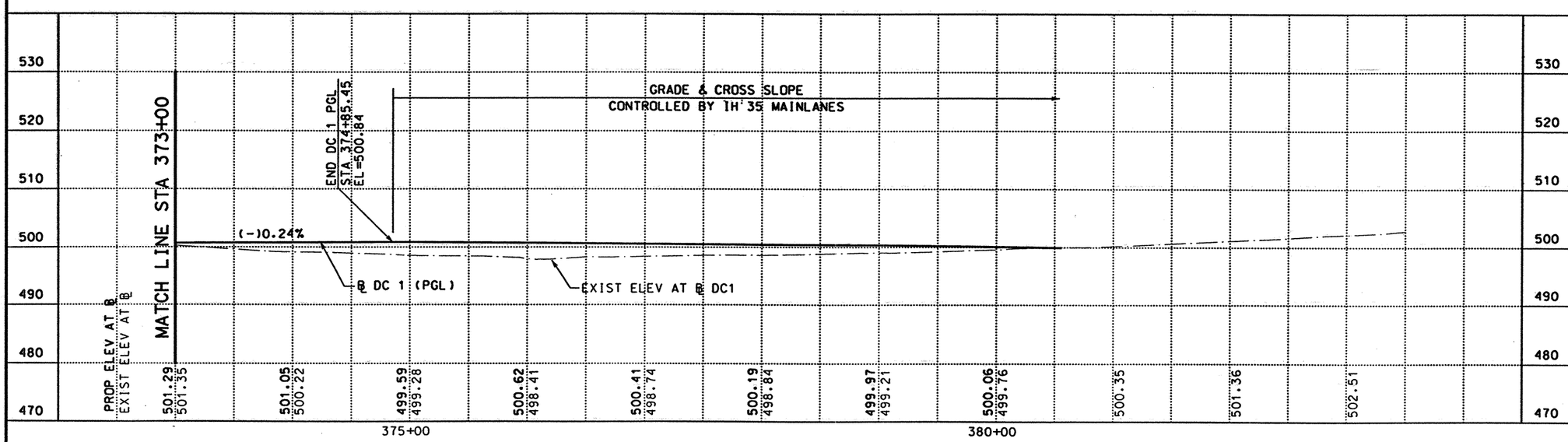

STATE OF TEXAS
DERRON S. VINCIK
84028
REGISTERED PROFESSIONAL ENGINEER

The seal appearing on this document was authorized by Derron S. Vincik P.E. 84028, on April 2, 1999.

DATE	BY	REV	REVISION

© 1999
Texas Department of Transportation

Brown & Root
HOUSTON, TEXAS

IH 35
DIRECT CONNECTOR 1

PLAN AND PROFILE
STA 373+00 TO STA 383+00

0 50 100
SCALE: 1"=100' HORZ
1"=20' VERT

SHEET 7 OF 7

FED RD DIV NO	STATE PROJECT NO		SHEET NO
6	NH-99(462)		3/11
STATE	STATE DIST NO		COUNTY
TEXAS	22		WEBB
CONT	SECT	JOB	HIGHWAY NO
0018	06	131	IH 35

REF FILE(S): J01LOX01.PRO, PRO LV ON = J01LOX01.UTI, UTI LV ON = 1-63 J01LOX01.ILL, ILL LV ON = 20 J01LOX01.FND, FND LV ON = 35 J01LOX01.DRN, DRN LV ON = 8

REF FILE(S): J01LOX01.BCK, BCK LV ON = J01LOX01.EOP, EOP LV ON = 1-30 J01LOX01.EOP, ALG LV ON = 1-11,13-17,19-27,29-41,43-53,5 J01LOX01.BDR, BDR LV ON = 5,10,35,45,46,57,60-62

D03CIX07.DGN-04 03-06-99 BAR_HO_ES05 \HOCIVIL\CF0039\PHASE2

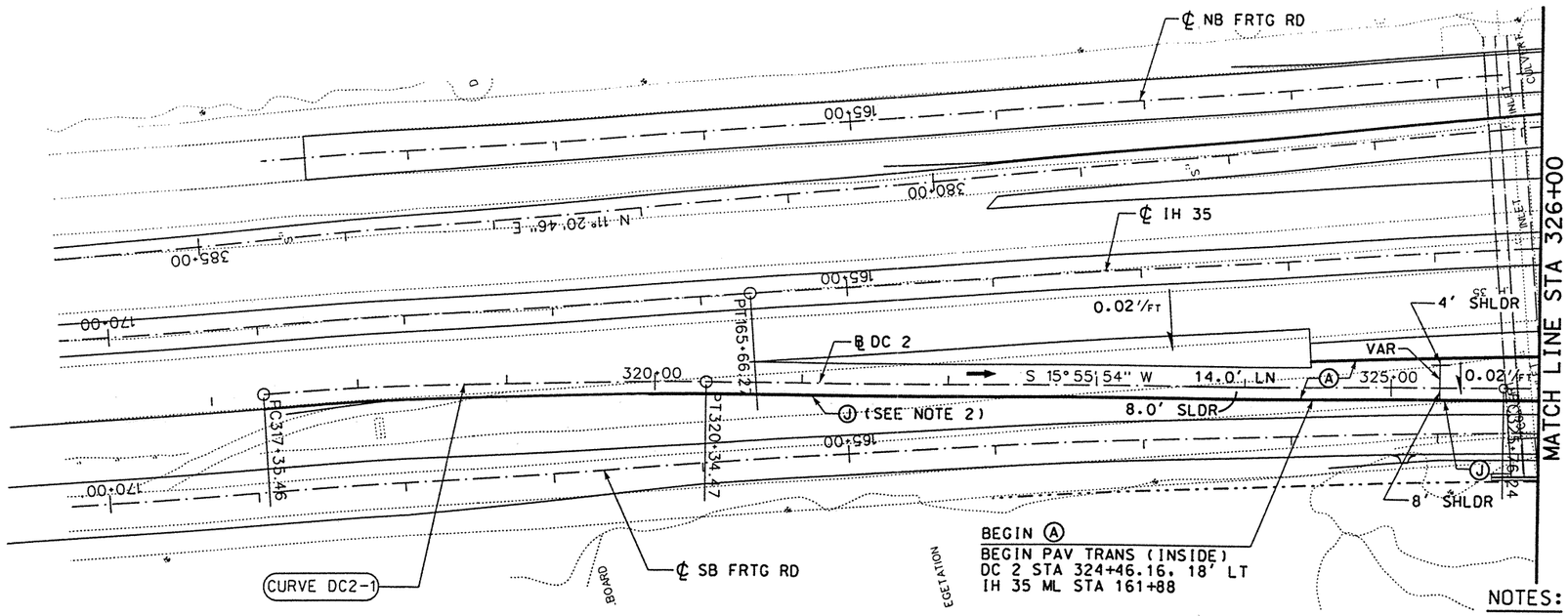

LEGEND:

- (A) CONC PAV (CONT REINF HY STL)(12")
- (B) ASPH CONC PAV (TY A)(4")
- (C) LIME TREATED SUBGRADE (8")
- (D) SINGLE SLOPE CONCRETE BARRIER (SSCB) (TYPE 2)
- (E) TYPE II MONO CURB (6")
- (F) CELL FIBER MULCH SEED (PERM) (RURAL)(CLAY)
- (G) CLASS B RIPRAP (4")
- (H) CONC SIDEWALK (4")
- (I) CONC MEDIAN (6")
- (J) SINGLE SLOPE TRAFFIC RAIL(SSTR) w/ DRAIN SLOTS
- (K) RETAINING WALL
- (L) METAL BEAM GUARD FENCE
- (M) BRICK PAVERS
- (N) REMOVE ASPH CONC PAV
- (O) REMOVE CONC PAV
- (P) TYPE II CURB AND GUTTER (6")
- (Q) CONCRETE DRIVEWAYS (6")
- (R) ASPH CONC PAV (TY D)(2")
- (S) ASPH CONC PAV (TY A)(8")
- (T) PLANE ASPH CONC PAV (0 - 1")
- (U) SINGLE SLOPE TRAFFIC RAIL (SSTR)
- (V) CHAINLINK FENCE (6')
- (W) ROADWAY UNDERDRAIN
- (X) WHEELCHAIR RAMP TYPE B

NOTES:

1. SEE "GEOMETRIC DATA SUMMARY" FOR ALIGNMENT DATA.
2. SEE "IH35 MAINLANE PLAN AND PROFILE" FOR MORE DETAILS.
3. SEE "DC 2 RETAINING WALL LAYOUT" FOR MORE DETAILS.
4. SEE "SIGNING AND PAVEMENT MARKING LAYOUT" FOR APPROPRIATE ONE-LANE CONFIGURATION.
5. SEE "SOUTHBOUND FRONTAGE ROAD PLAN AND PROFILE" FOR MORE DETAILS.

STATE OF TEXAS
DERRON S. VINCIK
84028
REGISTERED PROFESSIONAL ENGINEER

The seal appearing on this document was authorized by Derron S. Vincik P.E. 84028, on June 3, 1999.

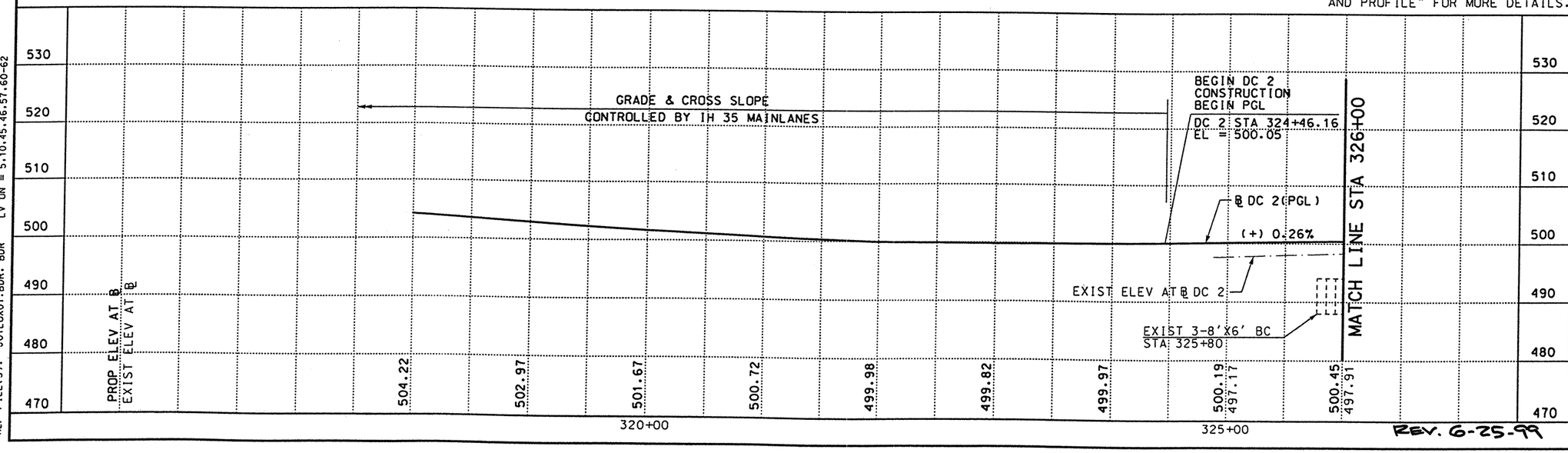

REV. 6-25-99

DATE	BY	REV	REVISION
6/3/99	DV	01	CALLOUT

© 1999 Texas Department of Transportation

Brown & Root
HOUSTON, TEXAS

IH 35
DIRECT CONNECTOR 2

PLAN AND PROFILE
STA 317+70.71 TO
STA 326+00

0 50 100
SCALE: 1"=100' HORZ
1"=20' VERT

SHEET 1 OF 7

FED RD DIV NO	STATE PROJECT NO	SHEET NO
6	NH-99(462)	312

STATE	STATE DIST NO	COUNTY
TEXAS	22	WEBB

CONT	SECT	JOB	HIGHWAY NO
0018	06	131	IH 35

D03C2X01.DGN-08 05-28-99 BAR_HO_ES05 \HCIVIL\CF0039\PHASE2

REF FILE(S): J01LOX01.PRO, PRO LV ON = 1-63
J01LOX01.UTI, UTI LV ON = 1-63
J01LOX01.ILL, ILL LV ON = 20
J01LOX01.FND, FND LV ON = 35
J01LOX01.DRN, DRN LV ON = 8

REF FILE(S): J01LOX01.BCK, BCK LV ON = 1-30
J01LOX01.EOP, EOP LV ON = 1-11,13-17,19-27,29-41,43-53,5
J01LOX01.EOP, ALG LV ON = 1-44
J01LOX01.BDR, BDR LV ON = 5,10,45,46,57,60-62

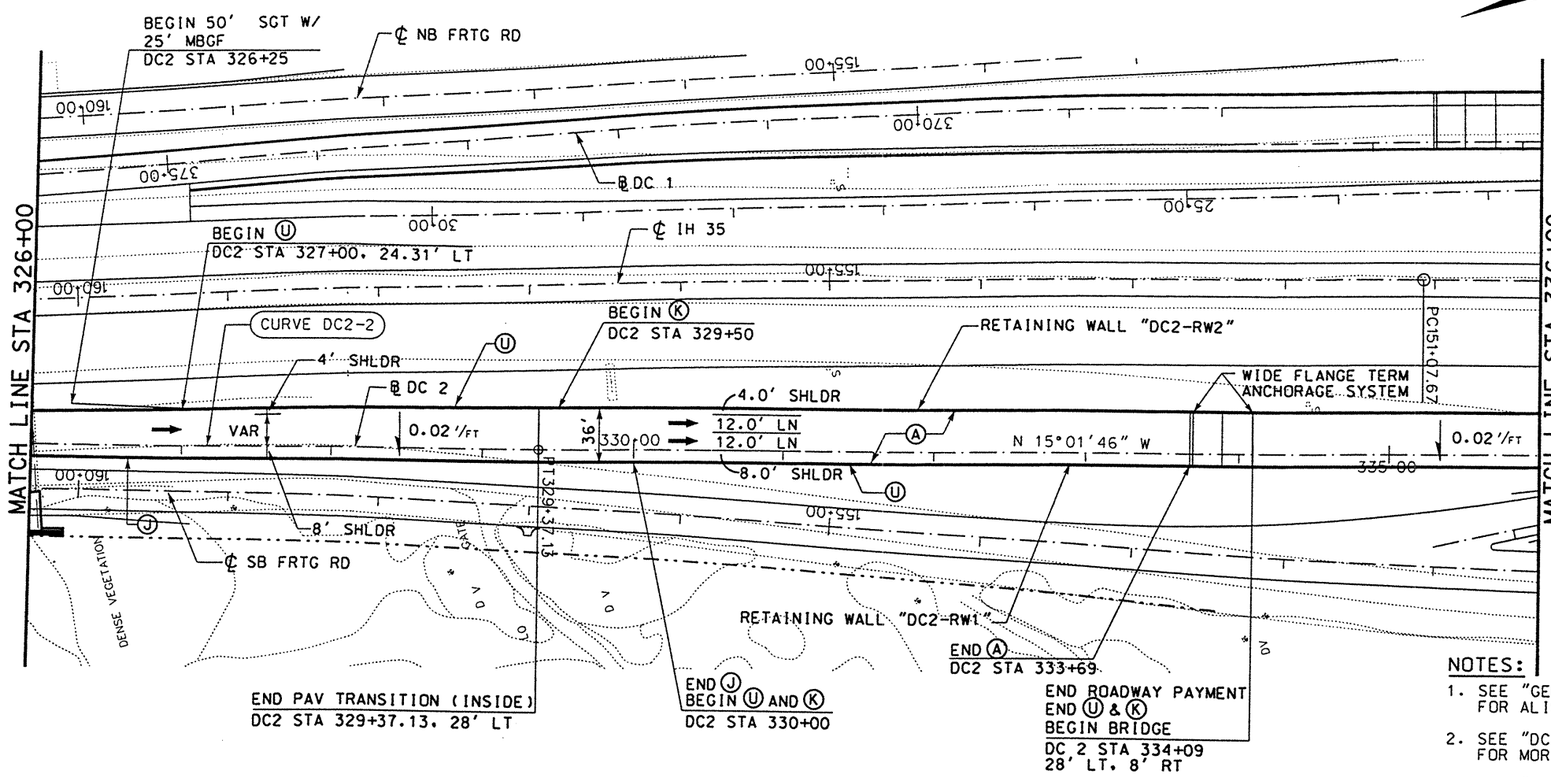

LEGEND:

- Ⓐ CONC PAV (CONT REINF HY STL)(12")
- Ⓑ ASPH CONC PAV (TY A)(4")
- Ⓒ LIME TREATED SUBGRADE (8")
- Ⓓ SINGLE SLOPE CONCRETE BARRIER (SSCB) (TYPE 2)
- Ⓔ TYPE II MONO CURB (6")
- Ⓕ CELL FIBER MULCH SEED (PERM) (RURAL)(CLAY)
- Ⓖ CLASS B RIPRAP (4")
- Ⓗ CONC SIDEWALK (4")
- Ⓘ CONC MEDIAN (6")
- Ⓙ SINGLE SLOPE TRAFFIC RAIL(SSTR) w/ DRAIN SLOTS
- Ⓚ RETAINING WALL
- Ⓛ METAL BEAM GUARD FENCE
- Ⓜ BRICK PAVERS
- Ⓝ REMOVE ASPH CONC PAV
- Ⓞ REMOVE CONC PAV
- Ⓟ TYPE II CURB AND GUTTER (6")
- Ⓠ CONCRETE DRIVEWAYS (6")
- Ⓡ ASPH CONC PAV (TY D)(2")
- Ⓢ ASPH CONC PAV (TY A)(8")
- Ⓣ PLANE ASPH CONC PAV (0 - 1")
- Ⓤ SINGLE SLOPE TRAFFIC RAIL (SSTR)
- Ⓥ CHAINLINK FENCE (6')
- Ⓦ ROADWAY UNDERDRAIN
- Ⓧ WHEELCHAIR RAMP TYPE B

NOTES:

1. SEE "GEOMETRIC DATA SUMMARY" FOR ALIGNMENT DATA.
2. SEE "DC 2 RETAINING WALL LAYOUT" FOR MORE DETAILS.
3. SEE "DIRECT CONNECTOR 2 BRIDGE LAYOUT" FOR MORE DETAILS.
4. SEE "SIGNING AND PAVEMENT MARKING LAYOUT" FOR APPROPRIATE ONE-LANE CONFIGURATION.
5. SEE "SOUTHBOUND FRONTAGE ROAD PLAN AND PROFILE" FOR MORE DETAILS.

REV. 6-25-99

STATE OF TEXAS
DERRON S. VINCIK
84028
REGISTERED PROFESSIONAL ENGINEER

The seal appearing on this document was authorized by Derron S. Vincik P.E. 84028, on June 3, 1999.

DATE	BY	REV	REVISION
6/3/99	DV	01	CALLOUT

© 1999 Texas Department of Transportation

Brown & Root
HOUSTON, TEXAS

IH 35
DIRECT CONNECTOR 2

PLAN AND PROFILE
STA 326+00 TO
STA 336+00

0 50 100
SCALE: 1"=100' HORIZ
1"=20' VERT

SHEET 2 OF 7

FED RD DIV NO	STATE PROJECT NO	SHEET NO
6	NH-99(462)	313

STATE	STATE DIST NO	COUNTY
TEXAS	22	WEBB

CONT	SECT	JOB	HIGHWAY NO
0018	06	131	IH 35

REF FILE(S): J01LOX01.PRO, PRO LV ON = 1-63
J01LOX01.UTI, UTI LV ON = 1-63
J01LOX01.ILL, ILL LV ON = 20
J01LOX01.FND, FND LV ON = 35
J01LOX01.DRN, DRN LV ON = 8

REF FILE(S): J01LOX01.BCK, BCK LV ON = 1-30
J01LOX01.EOP, EOP LV ON = 1-11,13-17,19-27,29-41,43-53,5
J01LOX01.EOP, ALG LV ON = 1-44
J01LOX01.BDR, BDR LV ON = 5,10,35,45,46,57,60-62

D03C2X02.DGN-09 05-29-99 BAR_HO_ES05 \HCIVIL\CF0039\PHASE2

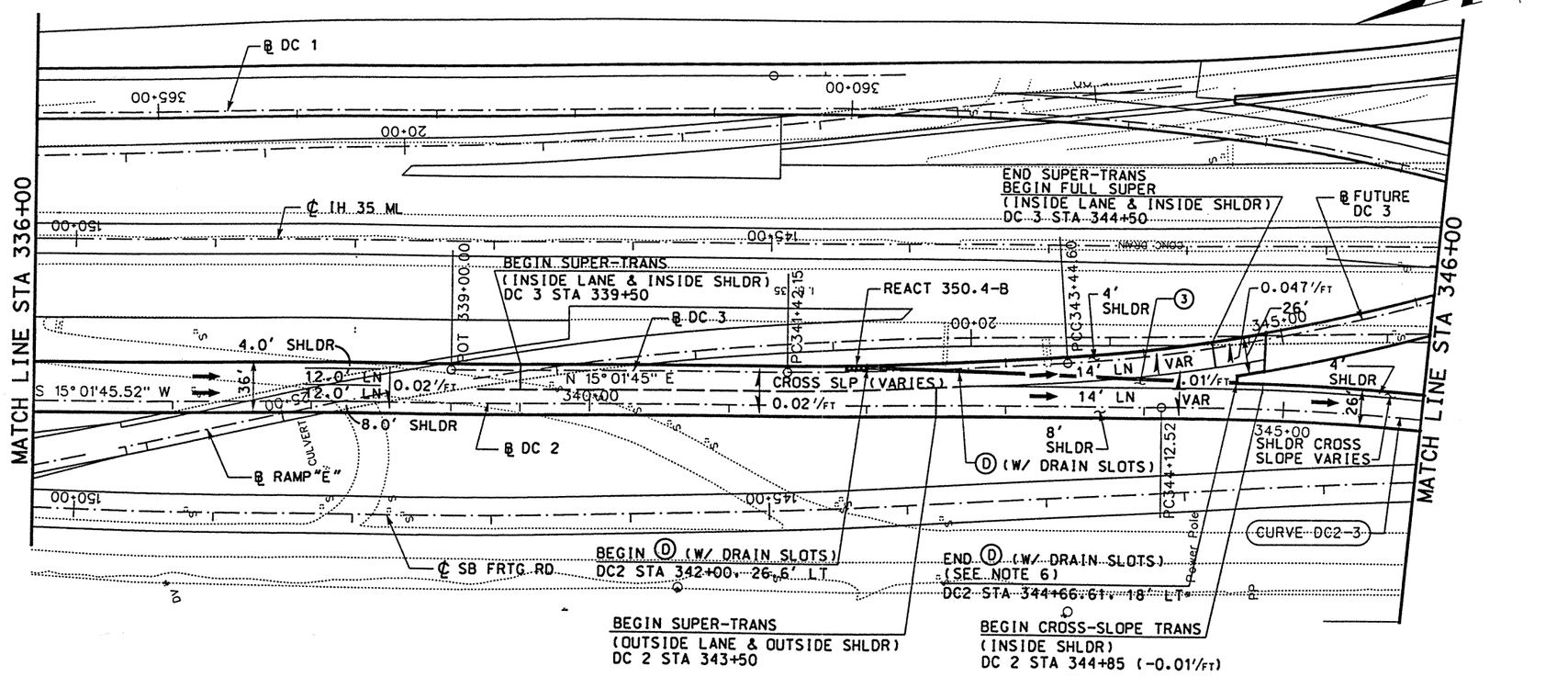

LEGEND:

- Ⓐ CONC PAV (CONT REINF HY STL)(12")
- Ⓑ ASPH CONC PAV (TY A)(4")
- Ⓒ LIME TREATED SUBGRADE (8")
- Ⓓ SINGLE SLOPE CONCRETE BARRIER (SSCB) (TYPE 2)
- Ⓔ TYPE II MONO CURB (6")
- Ⓕ CELL FIBER MULCH SEED (PERM) (RURAL)(CLAY)
- Ⓖ CLASS B RIPRAP (4")
- Ⓗ CONC SIDEWALK (4")
- Ⓘ CONC MEDIAN (6")
- Ⓙ SINGLE SLOPE TRAFFIC RAIL(SSTR) w/ DRAIN SLOTS
- Ⓚ RETAINING WALL
- Ⓛ METAL BEAM GUARD FENCE
- Ⓜ BRICK PAVERS
- Ⓝ REMOVE ASPH CONC PAV
- Ⓞ REMOVE CONC PAV
- Ⓟ TYPE II CURB AND GUTTER (6")
- Ⓠ CONCRETE DRIVEWAYS (6")
- Ⓡ ASPH CONC PAV (TY D)(2")
- Ⓢ ASPH CONC PAV (TY A)(8")
- Ⓣ PLANE ASPH CONC PAV (0 - 1")
- Ⓤ SINGLE SLOPE TRAFFIC RAIL (SSTR)
- Ⓥ CHAINLINK FENCE (6')
- Ⓦ ROADWAY UNDERDRAIN
- Ⓧ WHEELCHAIR RAMP TYPE B

NOTES:

1. SEE "GEOMETRIC DATA SUMMARY" FOR ALIGNMENT DATA.
2. SEE "DIRECT CONNECTOR #2 BRIDGE LAYOUT" FOR MORE DETAILS.
3. SEE "DIRECT CONNECTOR #2 GORE DETAILS" (pp 618B-618D) FOR MORE INFORMATION.
4. SEE " SIGNING AND PAVEMENT MARKING LAYOUT" FOR APPROPRIATE ONE-LANE CONFIGURATION.
5. ITEM Ⓓ SHALL BE CONSIDERED AS TEMPORARY INSTALLATION, AND SHALL BE PAID FOR AS A ROADWAY ITEM.
6. CONNECT Ⓓ TO BRIDGE RAIL WITH MBGF. SEE CONNECTION DETAIL FROM SINGLE SLOPE TRAFFIC RAILING STANDARD (TYPE SSTR).

REV. 6-25-99

STATE OF TEXAS
DERRON S. VINCIK
84028
REGISTERED PROFESSIONAL ENGINEER

The seal appearing on this document was authorized by Derron S. Vincik P.E. 84028, on June 3, 1999.

Derron S. Vincik

DATE	BY	REV	REVISION
6/03/99	DV	01	NOTES

© 1999 Texas Department of Transportation

Brown & Root
HOUSTON, TEXAS

IH 35
DIRECT CONNECTOR 2

PLAN AND PROFILE
STA 336+00 TO STA 346+00

0 50 100
SCALE: 1"=100' HORIZ
1"=20' VERT

SHEET 3 OF 7

FED RD DIV NO	STATE PROJECT NO		SHEET NO
6	NH-99(462)		314
STATE	STATE DIST NO	COUNTY	
TEXAS	22	WEBB	
CONT	SECT	JOB	HIGHWAY NO
0018	06	131	IH 35

D03C2X03.DGN-11 06-02-99 BAR_HO_ES05 \HCIVIL\CF0039\PHASE2

REF FILE(S): J01LOX01.PRO, PRO LV ON = 1-03
J01LOX01.UTI, UTI LV ON = 1-03
J01LOX01.ILL, ILL LV ON = 20
J01LOX01.FND, FND LV ON = 35
J01LOX01.DRN, DRN LV ON = 8

REF FILE(S): J01LOX01.BCK, BCK LV ON = 1-30
J01LOX01.EOP, EOP LV ON = 1-11,13-17,19-27,29-41,43-53,5
J01LOX01.EOP, ALG LV ON = 1-44
J01LOX01.BDR, BDR LV ON = 5,10,35,45,46,57,60-62

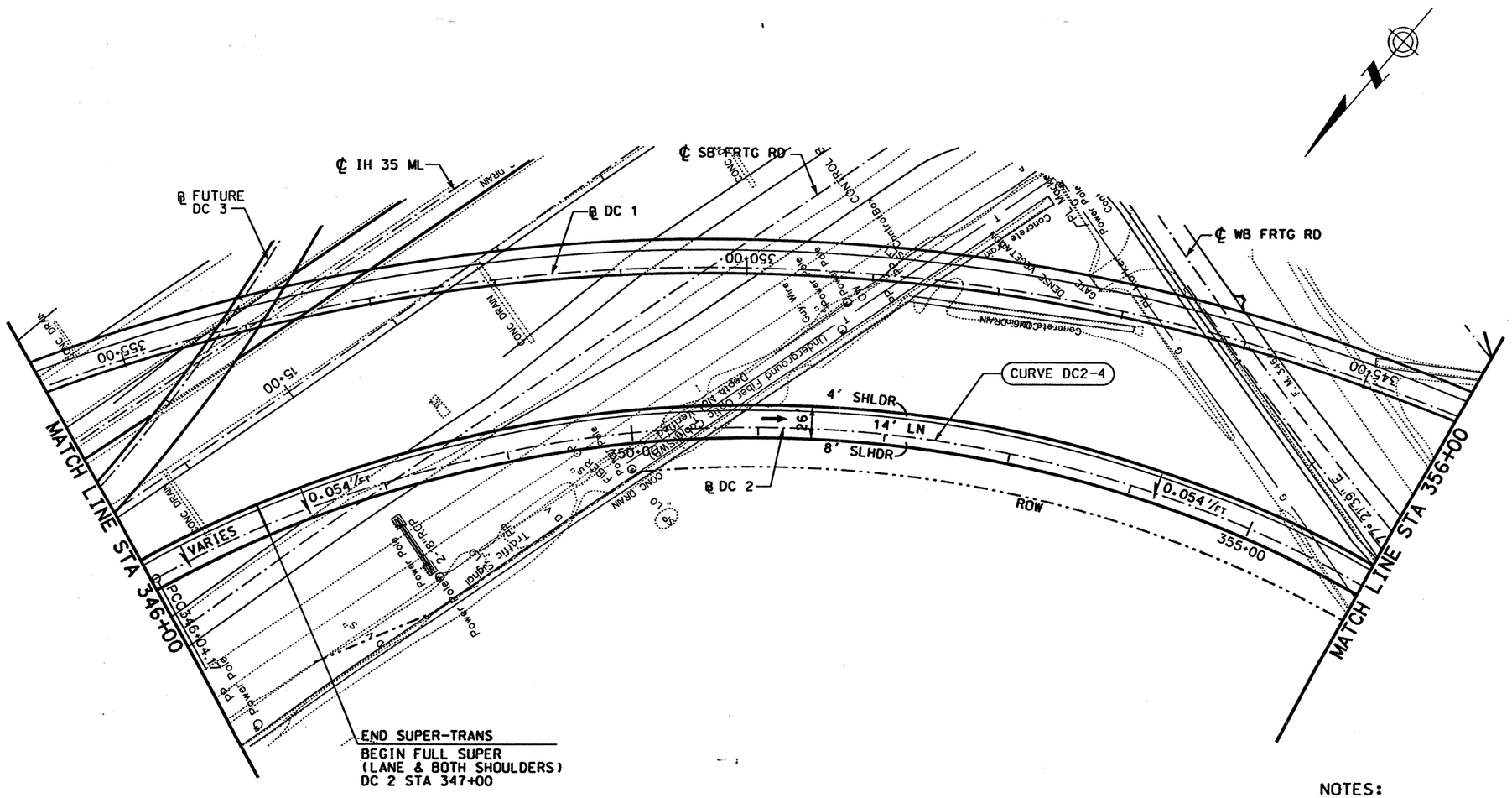

LEGEND:

- Ⓐ CONC PAV (CONT REINF HY STL)(12")
- Ⓑ ASPH CONC PAV (TY A)(4")
- Ⓒ LIME TREATED SUBGRADE (8")
- Ⓓ SINGLE SLOPE CONCRETE BARRIER (SSCB) (TYPE 2)
- Ⓔ TYPE II MONO CURB (6")
- Ⓕ CELL FIBER MULCH SEED (PERM) (RURAL)(CLAY)
- Ⓖ CLASS B RIPRAP (4")
- Ⓗ CONC SIDEWALK (4")
- Ⓘ CONC MEDIAN (6")
- Ⓙ SINGLE SLOPE TRAFFIC RAIL(SSTR) w/ DRAIN SLOTS
- Ⓚ RETAINING WALL
- Ⓛ METAL BEAM GUARD FENCE
- Ⓜ BRICK PAVERS
- Ⓝ REMOVE ASPH CONC PAV
- Ⓞ REMOVE CONC PAV
- Ⓟ TYPE II CURB AND GUTTER (6")
- Ⓠ CONCRETE DRIVEWAYS (6")
- Ⓡ ASPH CONC PAV (TY D)(2")
- Ⓢ ASPH CONC PAV (TY A)(8")
- Ⓣ PLANE ASPH CONC PAV (0 - 1")
- Ⓤ SINGLE SLOPE TRAFFIC RAIL (SSTR)
- Ⓥ CHAINLINK FENCE (6')
- Ⓦ ROADWAY UNDERDRAIN
- Ⓧ WHEELCHAIR RAMP TYPE B

NOTES:

1. SEE "GEOMETRIC DATA SUMMARY" FOR ALIGNMENT DATA.
2. SEE "DIRECT CONNECTOR 2 BRIDGE LAYOUT FOR MORE DETAILS.

STATE OF TEXAS
DERRON S. VINCIK
84028
REGISTERED PROFESSIONAL ENGINEER

The seal appearing on this document was authorized by Derron S. Vincik P.E. 84028, on April 2, 1999.

DATE	BY	REV	REVISION

© 1999 Texas Department of Transportation

Brown & Root
HOUSTON, TEXAS

IH 35
DIRECT CONNECTOR 2

PLAN AND PROFILE
STA 346+00 TO STA 356+00

0 50 100
SCALE: 1"=100' HORZ
1"=20' VERT

SHEET 4 OF 7

FED RD DIV NO	STATE PROJECT NO		SHEET NO
6	NH-99(462)		315
STATE	STATE DIST NO		COUNTY
TEXAS	22		WEBB
CONT	SECT	JOB	HIGHWAY NO
0018	06	131	IH 35

REF FILE(S): J01LOX01.BDR, BDR LV ON = 8
J01LOX01.EOP, ALG LV ON = 1-44
J01LOX01.EOP, EOP LV ON = 1-11,13-17,19-20,22-24,41-53,61 LV ON = 20
J01LOX01.BCK, BCK LV ON = 1-30
J01LOX01.PRO, PRO LV ON = 1-63
J01LOX01.UTI, UTI LV ON = 1-63
J01LOX01.FND, FND LV ON = 35
J01LOX01.DRN, DRN LV ON = 8

D03C2X04.DGN-07 02-03-99 BAR_HO_ES05 \HCIVIL\CF0039\PHASE2

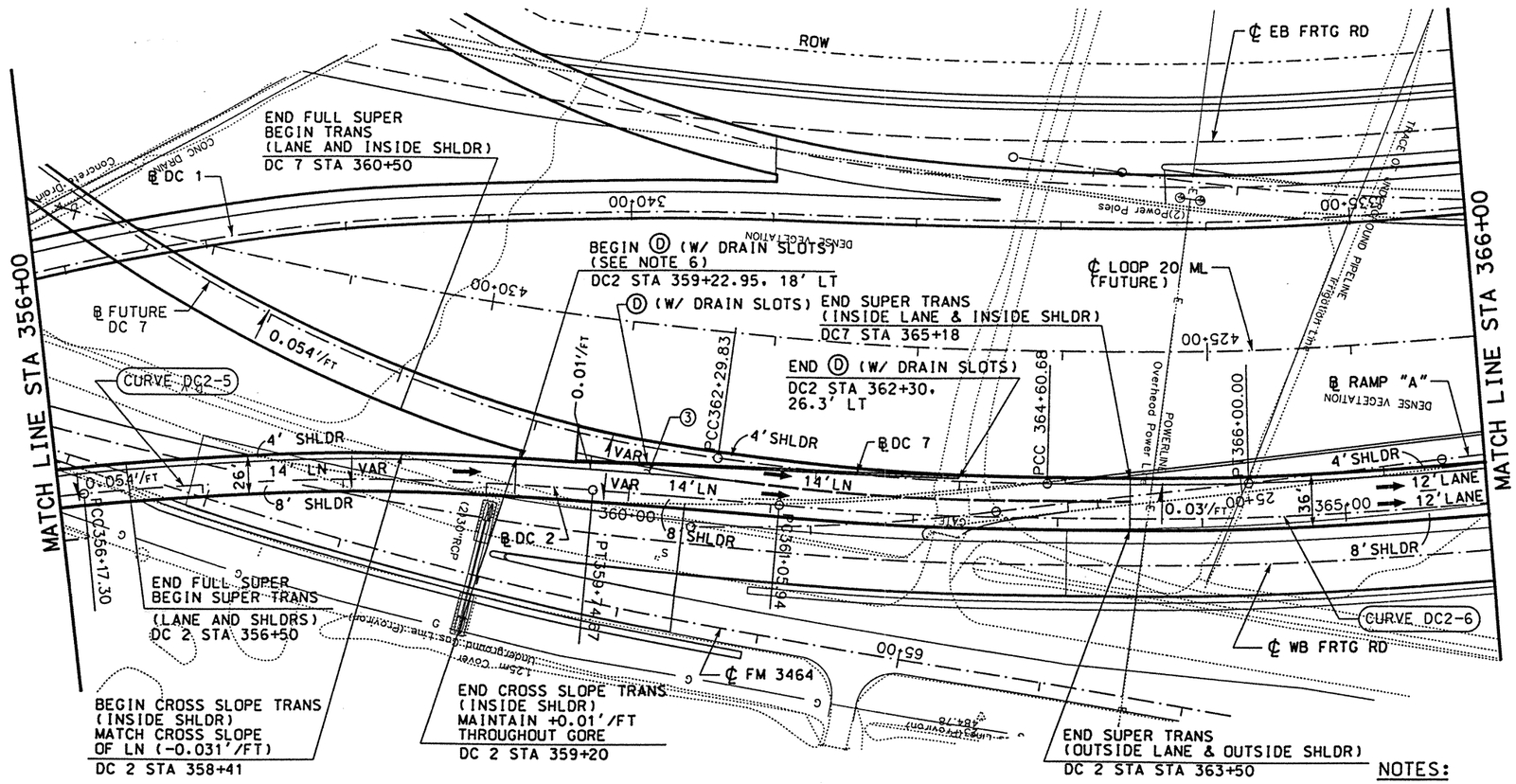

LEGEND:

- Ⓐ CONC PAV (CONT REINF HY STL)(12")
- Ⓑ ASPH CONC PAV (TY A)(4")
- Ⓒ LIME TREATED SUBGRADE (8")
- Ⓓ SINGLE SLOPE CONCRETE BARRIER (SSCB) (TYPE 2)
- Ⓔ TYPE II MONO CURB (6")
- Ⓕ CELL FIBER MULCH SEED (PERM) (RURAL)(CLAY)
- Ⓖ CLASS B RIPRAP (4")
- Ⓗ CONC SIDEWALK (4")
- Ⓘ CONC MEDIAN (6")
- Ⓙ SINGLE SLOPE TRAFFIC RAIL(SSTR) w/ DRAIN SLOTS
- Ⓚ RETAINING WALL
- Ⓛ METAL BEAM GUARD FENCE
- Ⓜ BRICK PAVERS
- Ⓝ REMOVE ASPH CONC PAV
- Ⓞ REMOVE CONC PAV
- Ⓟ TYPE II CURB AND GUTTER (6")
- Ⓠ CONCRETE DRIVEWAYS (6")
- Ⓡ ASPH CONC PAV (TY D)(2")
- Ⓢ ASPH CONC PAV (TY A)(8")
- Ⓣ PLANE ASPH CONC PAV (0 - 1")
- Ⓤ SINGLE SLOPE TRAFFIC RAIL (SSTR)
- Ⓥ CHAINLINK FENCE (6')
- Ⓦ ROADWAY UNDERDRAIN
- Ⓧ WHEELCHAIR RAMP TYPE B

NOTES:

1. SEE "GEOMETRIC DATA SUMMARY" FOR ALIGNMENT DATA.
2. SEE "DIRECT CONNECTOR #2 BRIDGE LAYOUT" FOR MORE DETAILS.
3. SEE "DIRECT CONNECTOR #2 GORE DETAILS" (pp 618B-618D) FOR MORE INFORMATION.
4. SEE " SIGNING AND PAVEMENT MARKING LAYOUT" FOR APPROPRIATE ONE-LANE CONFIGURATION.
5. ITEM Ⓓ SHALL BE CONSIDERED AS TEMPORARY INSTALLATION, AND SHALL BE PAID FOR AS A ROADWAY ITEM.
6. CONNECT Ⓓ TO BRIDGE RAIL WITH MBGF. SEE CONNECTION DETAIL FROM SINGLE SLOPE TRAFFIC RAILING STANDARD (TYPE SSTR).

REV. 6-25-99

STATE OF TEXAS
DERRON S. VINCIK
84028
REGISTERED PROFESSIONAL ENGINEER

The seal appearing on this document was authorized by Derron S. Vincik P.E. 84028, on June 3, 1999.

DATE	BY	REV	REVISION
6/02/99	DV	01	NOTES

© 1999 Texas Department of Transportation

Brown & Root
HOUSTON, TEXAS

IH 35
DIRECT CONNECTOR 2

PLAN AND PROFILE
STA 356+00 TO 366+00

0 50 100
SCALE: 1"=100' HORIZ
1"=20' VERT

SHEET 5 OF 7

FED RD DIV NO	STATE PROJECT NO		SHEET NO
6	NH-99(462)		316
STATE	STATE DIST NO	COUNTY	
TEXAS	22	WEBB	
CONT	SECT	JOB	HIGHWAY NO
0018	06	131	IH 35

D03C2X05.DGN-11 06-02-99 BAR_HO_ES05 \HCIVIL\CF0039\PHASE2

REF FILE(S): J01LOX01.PRO, J01LOX01.UTI, J01LOX01.ILL, J01LOX01.FND, J01LOX01.DRN,
LV O 63
LV ON = 1-63
LV ON = 20
LV ON = 35
LV ON = 8

REF FILE(S): J01LOX01.BCK, J01LOX01.EOP, J01LOX01.EOP, J01LOX01.BDR,
LV ON = 1-30
LV ON = 1-11,13-17,19-27,29-41,43-53,5
LV ON = 1-44
LV ON = 5,10,35,45,46,57,60-62

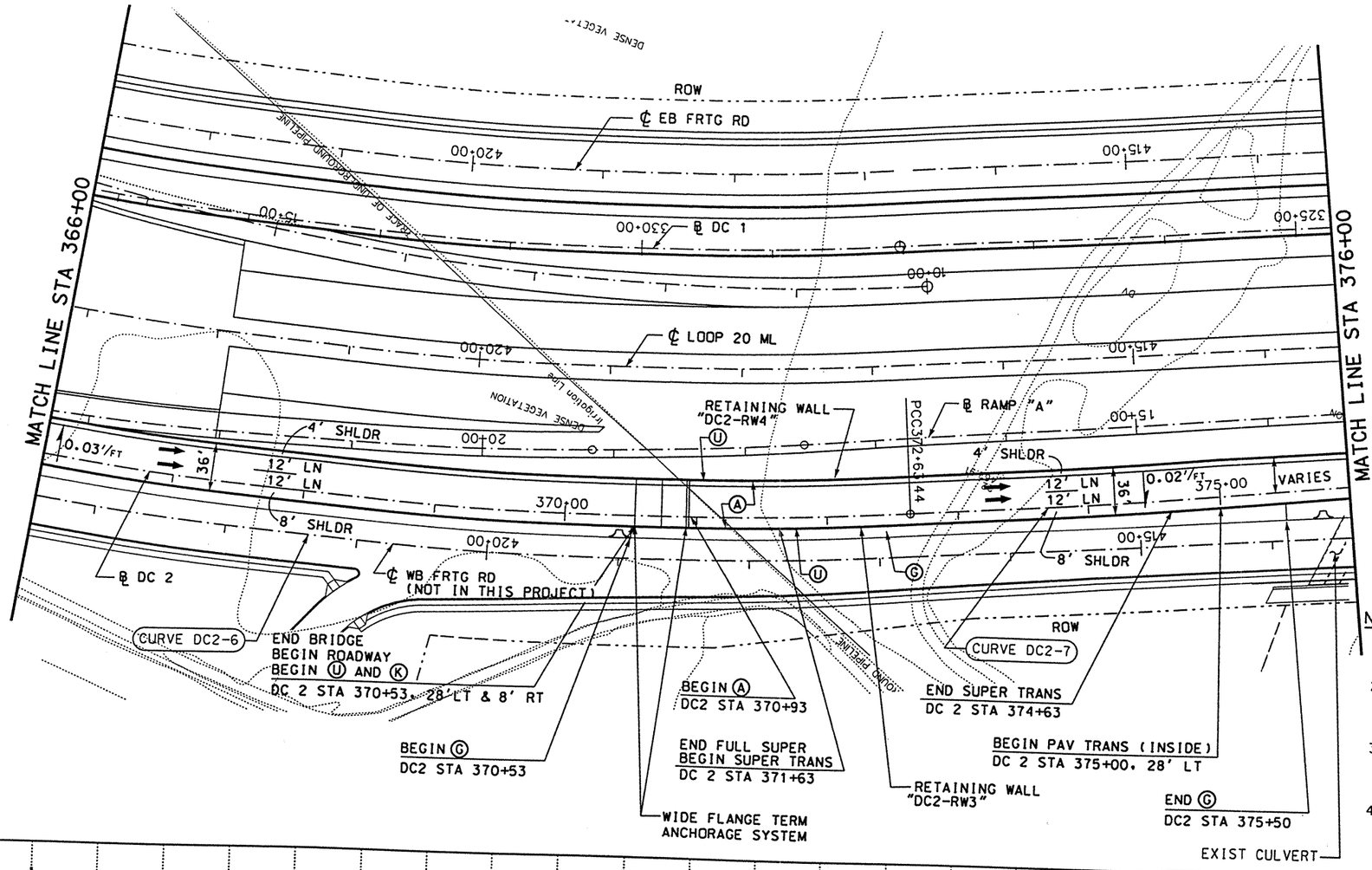

LEGEND:

- Ⓐ CONC PAV (CONT REINF HY STL)(12")
- Ⓑ ASPH CONC PAV (TY A)(4")
- Ⓒ LIME TREATED SUBGRADE (8")
- Ⓓ SINGLE SLOPE CONCRETE BARRIER (SSCB) (TYPE 2)
- Ⓔ TYPE II MONO CURB (6")
- Ⓕ CELL FIBER MULCH SEED (PERM) (RURAL)(CLAY)
- Ⓖ CLASS B RIPRAP (4")
- Ⓗ CONC SIDEWALK (4")
- Ⓘ CONC MEDIAN (6")
- Ⓙ SINGLE SLOPE TRAFFIC RAIL(SSTR) w/ DRAIN SLOTS
- Ⓚ RETAINING WALL
- Ⓛ METAL BEAM GUARD FENCE
- Ⓜ BRICK PAVERS
- Ⓝ REMOVE ASPH CONC PAV
- Ⓞ REMOVE CONC PAV
- Ⓟ TYPE II CURB AND GUTTER (6")
- Ⓠ CONCRETE DRIVEWAYS (6")
- Ⓡ ASPH CONC PAV (TY D)(2")
- Ⓢ ASPH CONC PAV (TY A)(8")
- Ⓣ PLANE ASPH CONC PAV (0 - 1")
- Ⓤ SINGLE SLOPE TRAFFIC RAIL (SSTR)
- Ⓥ CHAINLINK FENCE (6')
- Ⓦ ROADWAY UNDERDRAIN
- Ⓧ WHEELCHAIR RAMP TYPE B

NOTES:

1. SEE "GEOMETRIC DATA SUMMARY" FOR ALIGNMENT DATA.
2. SEE "DIRECT CONNECTOR #2 BRIDGE LAYOUT" FOR MORE DETAILS.
3. SEE "DC 2 RETAINING WALL LAYOUT" FOR MORE INFORMATION.
4. SEE "SIGNING AND PAVEMENT MARKING LAYOUT" FOR APPROPRIATE ONE- LANE CONFIGURATION.

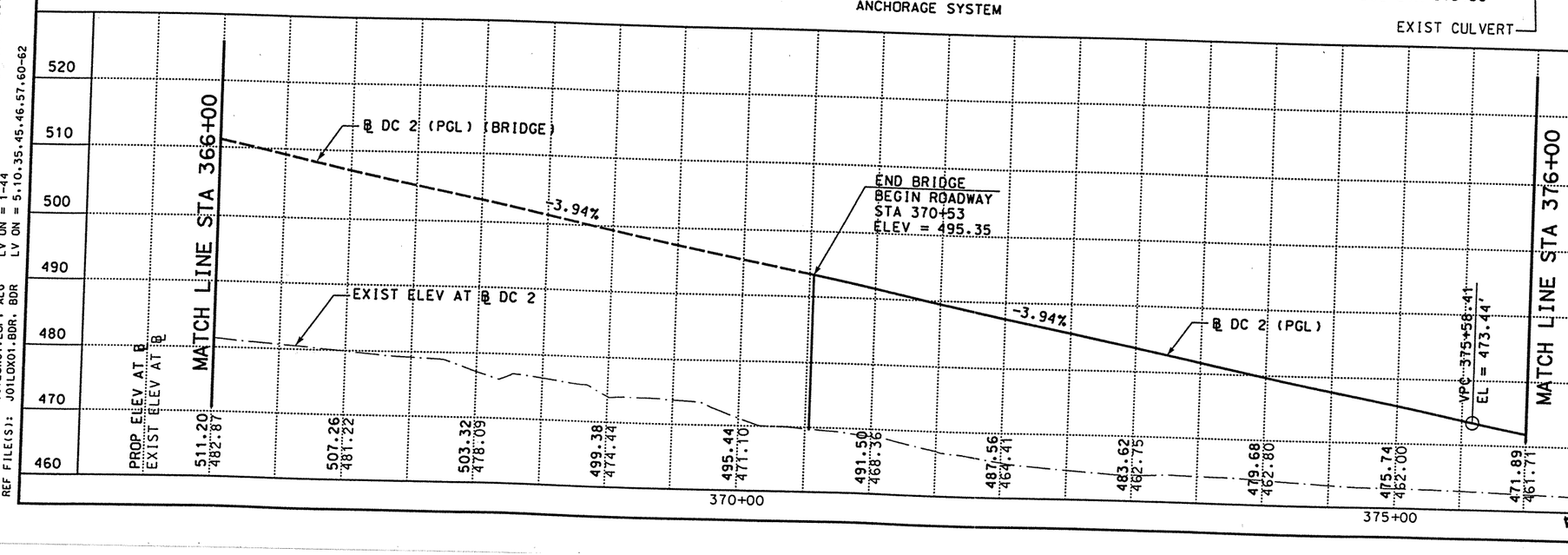

REV. 6-25-99

DATE	BY	REV	REVISION
6/3/99	DV	01	CALLOUT

STATE OF TEXAS — DERRON S. VINCIK — 84028 — REGISTERED PROFESSIONAL ENGINEER

The seal appearing on this document was authorized by Derron S. Vincik P.E. 84028, on June 3, 1999.

© 1999 Texas Department of Transportation

Brown & Root — HOUSTON, TEXAS

LOOP 20
DIRECT CONNECTOR 2

PLAN AND PROFILE
STA 366+00 TO STA 376+00

0 50 100
SCALE: 1"=100' HORIZ
1"=20' VERT

SHEET 6 OF 7

FED RD DIV NO	STATE PROJECT NO	SHEET NO
6	C86-14-23	317

STATE	STATE DIST NO	COUNTY
TEXAS	22	WEBB

CONT	SECT	JOB	HIGHWAY NO
0086	14	023	LOOP 20

REF FILE(S): J01LOX01.PRO, PRO LV ON = 1-63
J01LOX01.UTI, UTI LV ON = 1-63
J01LOX01.ILL, ILL LV ON = 20
J01LOX01.FND, FND LV ON = 35
J01LOX01.DRN, DRN LV ON = 8

REF FILE(S): J01LOX01.BCK, BCK LV ON = 1-30
J01LOX01.EDP, EDP LV ON = 1-11,13-17,19-27,29-41,43-53,5
J01LOX01.EDP, ALG LV ON = 1-44
J01LOX01.BDR, BDR LV ON = 5,10,35,45,46,57,60-62

D03C2X06.DGN-08 06-02-99 BAR_HO_ES05 \HCIVIL\CF0039\PHASE2

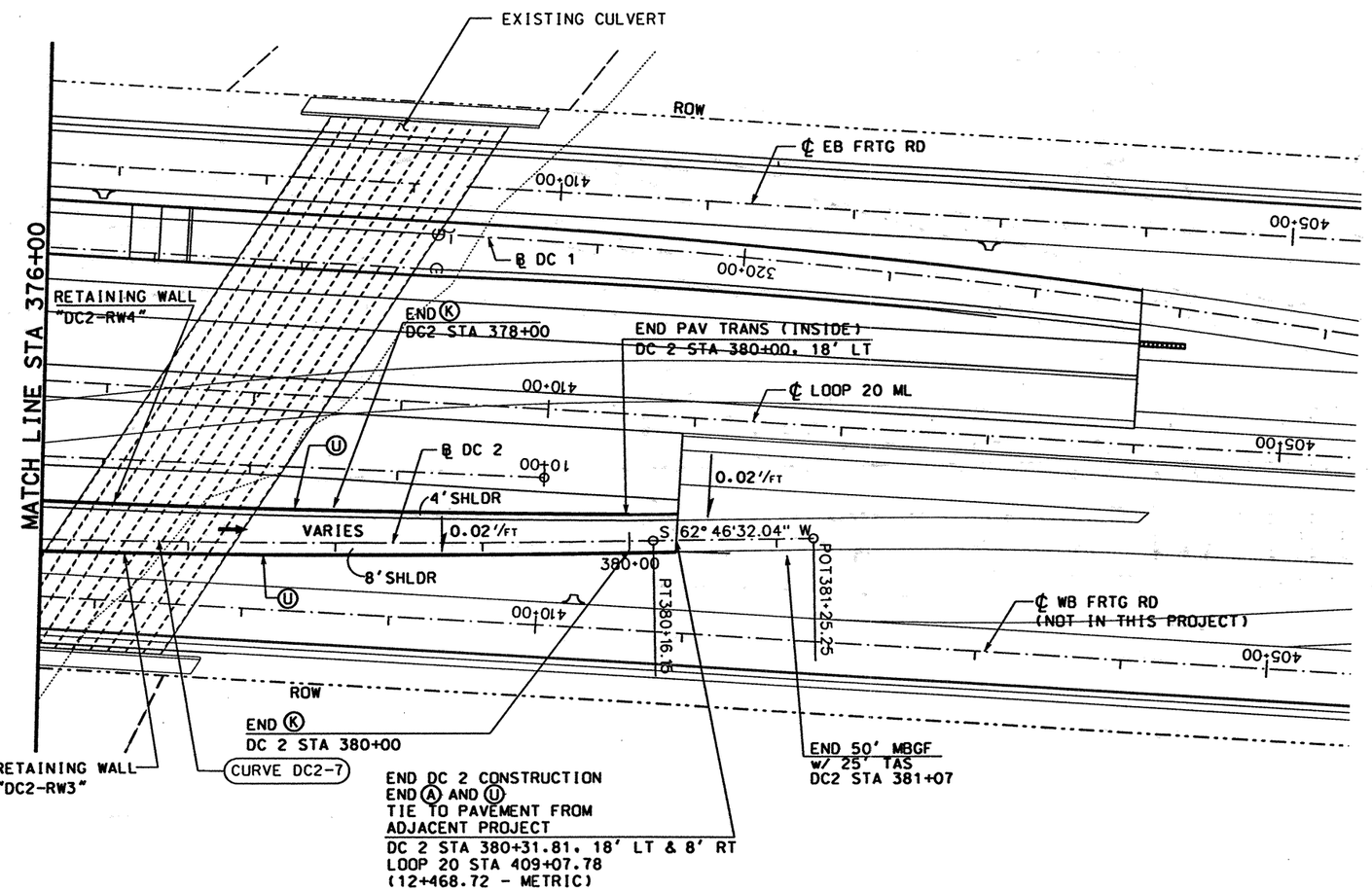

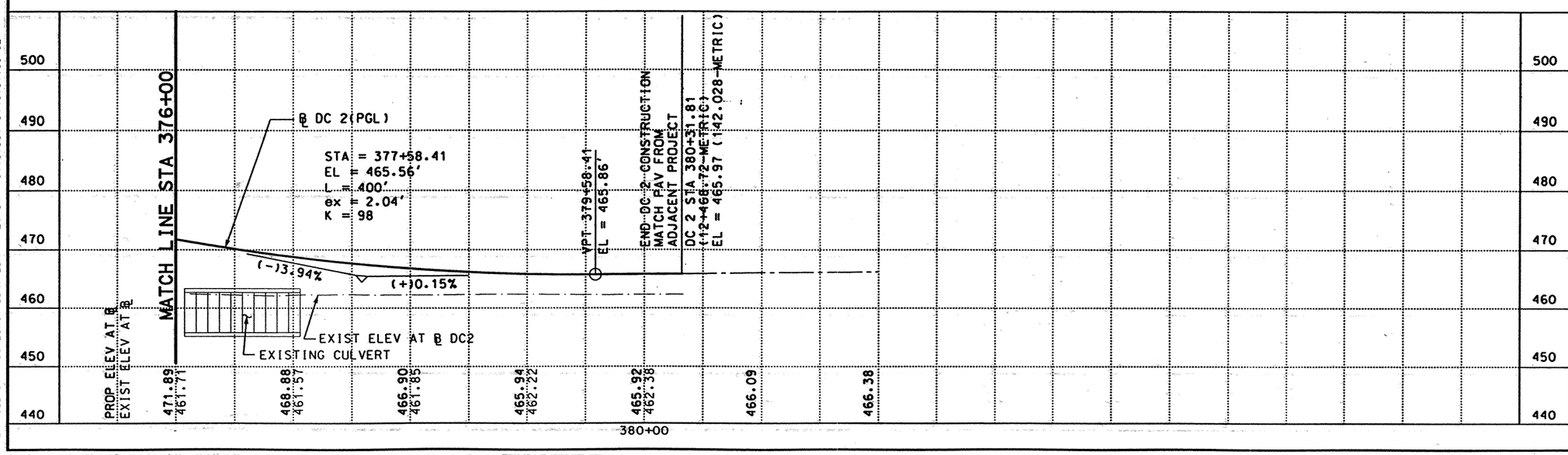

LEGEND:

- Ⓐ CONC PAV (CONT REINF HY STL)(12")
- Ⓑ ASPH CONC PAV (TY A)(4")
- Ⓒ LIME TREATED SUBGRADE (8")
- Ⓓ SINGLE SLOPE CONCRETE BARRIER (SSCB) (TYPE 2)
- Ⓔ TYPE II MONO CURB (6")
- Ⓕ CELL FIBER MULCH SEED (PERM) (RURAL)(CLAY)
- Ⓖ CLASS B RIPRAP (4")
- Ⓗ CONC SIDEWALK (4")
- Ⓘ CONC MEDIAN (6")
- Ⓙ SINGLE SLOPE TRAFFIC RAIL(SSTR) w/ DRAIN SLOTS
- Ⓚ RETAINING WALL
- Ⓛ METAL BEAM GUARD FENCE
- Ⓜ BRICK PAVERS
- Ⓝ REMOVE ASPH CONC PAV
- Ⓞ REMOVE CONC PAV
- Ⓟ TYPE II CURB AND GUTTER (6")
- Ⓠ CONCRETE DRIVEWAYS (6")
- Ⓡ ASPH CONC PAV (TY D)(2")
- Ⓢ ASPH CONC PAV (TY A)(8")
- Ⓣ PLANE ASPH CONC PAV (0 - 1")
- Ⓤ SINGLE SLOPE TRAFFIC RAIL (SSTR)
- Ⓥ CHAINLINK FENCE (6')
- Ⓦ ROADWAY UNDERDRAIN
- Ⓧ WHEELCHAIR RAMP TYPE B

NOTES:

1. SEE "GEOMETRIC DATA SUMMARY" FOR ALIGNMENT DATA.
2. SEE "LOOP 20 PLAN AND PROFILE" FOR MORE DETAILS.
3. SEE "DC 2 RETAINING WALL LAYOUT" FOR MORE INFORMATION.
4. SEE "SIGNING AND PAVEMENT MARKING LAYOUT" FOR APPROPRIATE ON - LANE CONFIGURATION.

STATE OF TEXAS
DERRON S. VINCIK
84028
REGISTERED PROFESSIONAL ENGINEER

The seal appearing on this document was authorized by Derron S. Vincik P.E. 84028, on April 2, 1999.

Derron S. Vincik

DATE	BY	REV	REVISION

© 1999
Texas Department of Transportation

Brown & Root
HOUSTON, TEXAS

LOOP 20
DIRECT CONNECTOR 2

PLAN AND PROFILE
STA 376+00 TO
STA 381+25.25

0 50 100
SCALE: 1"=100' HORIZ
1"=20' VERT

SHEET 7 OF 7

FED RD DIV NO	STATE PROJECT NO	SHEET NO
6	C86-14-23	3/8

STATE	STATE DIST NO	COUNTY
TEXAS	22	WEBB

CONT	SECT	JOB	HIGHWAY NO
0086	14	023	LOOP 20

J01LOX01.PRO, PRO LV ON = 1-63
J01LOX01.UTI, UTI LV ON = 1-63
J01LOX01.ILL, ILL LV ON = 20
J01LOX01.FND, FND LV ON = 35
J01LOX01.DRN, DRN LV ON = 8
REF FILE(S): J01LOX01.DGN
J01LOX01.BCK, BCK LV ON = 1-30
J01LOX01.EOP, EOP LV ON = 1-11,13-17,19-27,29-41,43-53,5
J01LOX01.EOP, ALG LV ON = 1-44
J01LOX01.BDR, BDR LV ON = 5,10,35,45,46,57,60-62
REF FILE(S): J01LOX01.DGN
D03C2X07.DGN-07 03-09-99 BAR_HO_ES05 \HCIVIL\CF0039\PHASE2

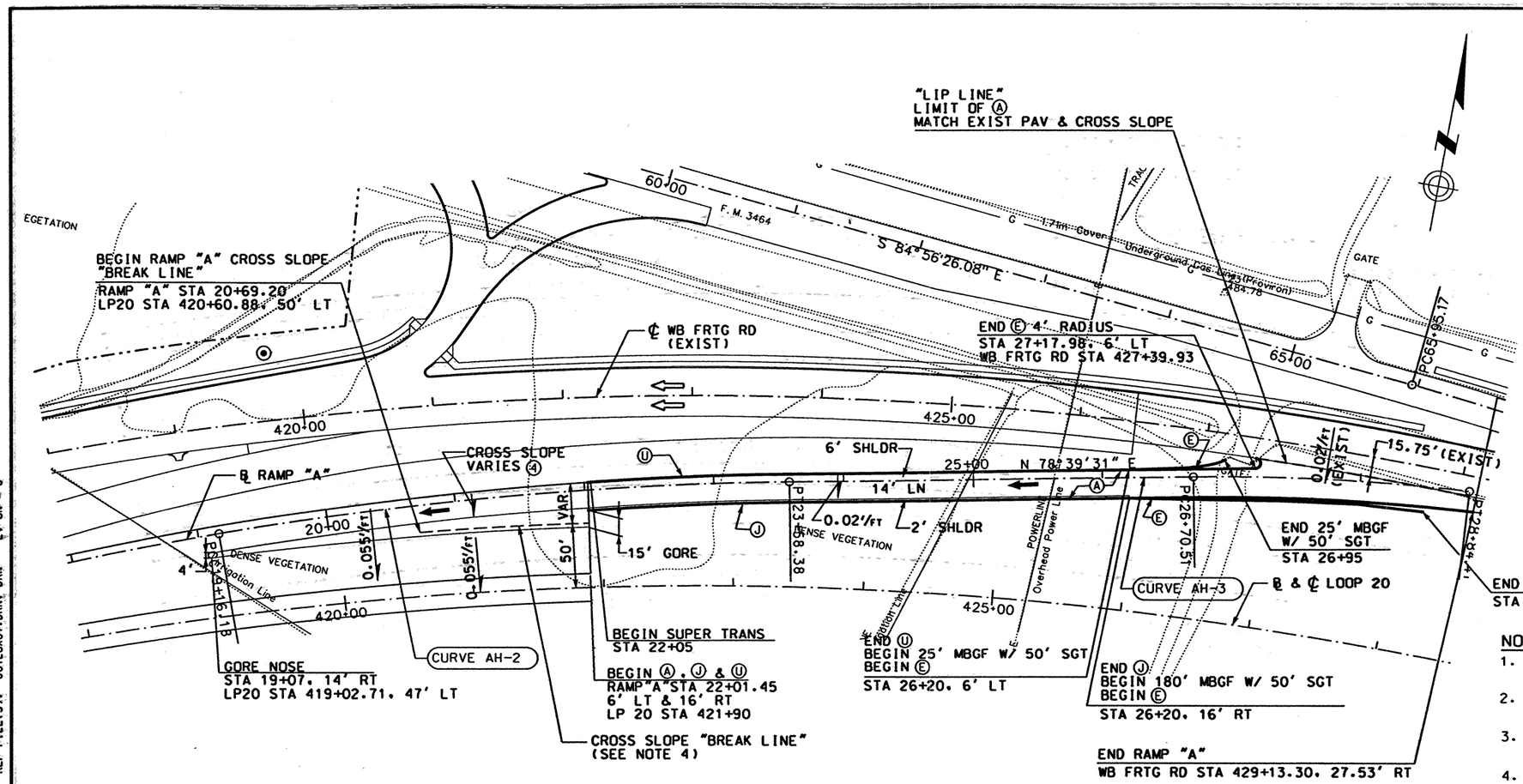

LEGEND:

- Ⓐ CONC PAV (CONT REINF HY STL)(12")
- Ⓑ ASPH CONC PAV (TY A)(4")
- Ⓒ LIME TREATED SUBGRADE (8")
- Ⓓ SINGLE SLOPE CONCRETE BARRIER (SSCB) (TYPE 2)
- Ⓔ TYPE II MONO CURB (6")
- Ⓕ CELL FIBER MULCH SEED (PERM) (RURAL)(CLAY)
- Ⓖ CLASS B RIPRAP (4")
- Ⓗ CONC SIDEWALK (4")
- Ⓘ CONC MEDIAN (6")
- Ⓙ SINGLE SLOPE TRAFFIC RAIL(SSTR) w/ DRAIN SLOTS
- Ⓚ RETAINING WALL
- Ⓛ METAL BEAM GUARD FENCE
- Ⓜ BRICK PAVERS
- Ⓝ REMOVE ASPH CONC PAV
- Ⓞ REMOVE CONC PAV
- Ⓟ TYPE II CURB AND GUTTER (6")
- Ⓠ CONCRETE DRIVEWAYS (6")
- Ⓡ ASPH CONC PAV (TY D)(2")
- Ⓢ ASPH CONC PAV (TY A)(8")
- Ⓣ PLANE ASPH CONC PAV (0 - 1")
- Ⓤ SINGLE SLOPE TRAFFIC RAIL (SSTR)
- Ⓥ CHAINLINK FENCE (6')
- Ⓦ ROADWAY UNDERDRAIN
- Ⓧ WHEELCHAIR RAMP TYPE B

NOTES:

1. SEE "GEOMETRIC DATA SUMMARY" FOR ALIGNMENT DATA.
2. SEE DIRECT CONNECTOR 2 "PLAN & PROFILE" FOR DETAILS.
3. SEE WB FRTG RD FOR "PLAN & PROFILE" FOR DETAILS.
4. CROSS SLOPE IS DETERMINED BY THE RAMP PGL ELEVATION AND THE ELEVATION AT THE CROSS SLOPE "BREAK LINE".

STATE OF TEXAS
DERRON S. VINCIK
84028
REGISTERED PROFESSIONAL ENGINEER

The seal appearing on this document was authorized by Derron S. Vincik P.E. 84028, on April 2, 1999.

Derron S. Vincik

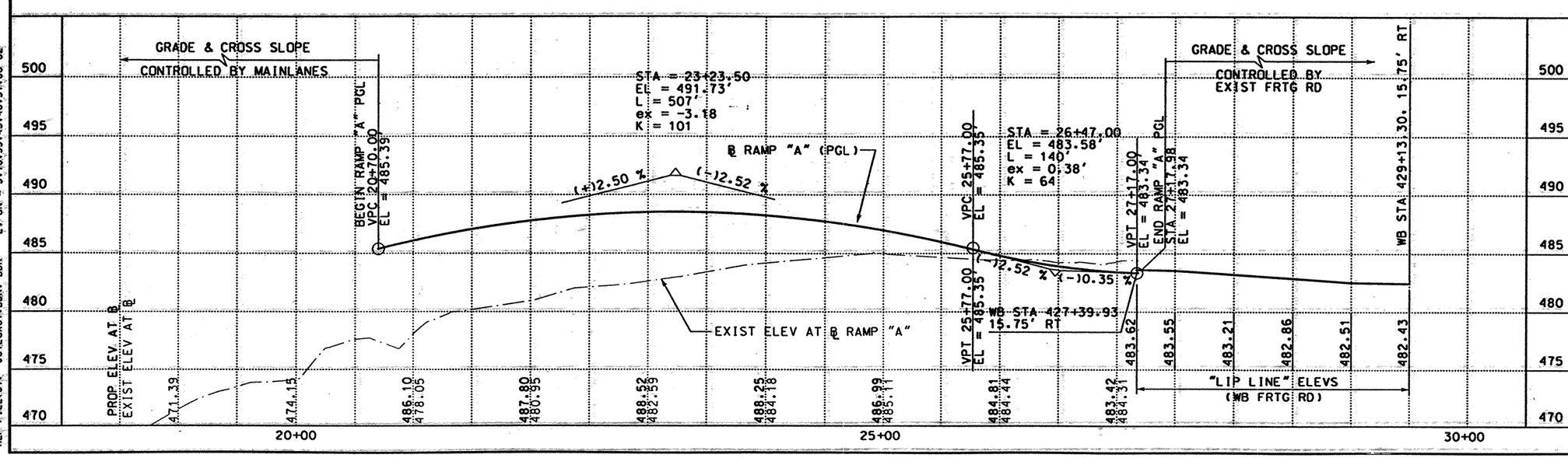

DATE	BY	REV	REVISION

© 1999 Texas Department of Transportation

Brown & Root
HOUSTON, TEXAS

LOOP 20

RAMP "A"
PLAN AND PROFILE

0 50 100
SCALE: 1"=100' HORZ
1"=10' VERT

SHEET 1 OF 1

FED RD DIV NO	STATE PROJECT NO		SHEET NO
6	C86-14-23		319
STATE	STATE DIST NO	COUNTY	
TEXAS	22	WEBB	
CONT	SECT	JOB	HIGHWAY NO
0086	14	023	LOOP 20

D03RAX01DGN-09 04-02-99 BAR_HO_ES05 \HCIVIL\CF0039\PHASE2

REF FILE(S): J01LOX01.PRO, PRO LV ON = 1-63
J01LOX01.UTI, UTI LV ON = 1-63
J01LOX01.ILL, ILL LV ON = 20
J01LOX01.FND, FND LV ON = 35
J01LOX01.DRN, DRN LV ON = 8

REF FILE(S): J01LOX01.BCK, BCK LV ON = 1-30
J01LOX01.EOP, EOP LV ON = 1-11,13-17,19-27,29-41,43-53,5
J01LOX01.EOP, ALG LV ON = 1-44
J01LOX01.BDR, BDR LV ON = 5,10,35,45,46,57,60-62

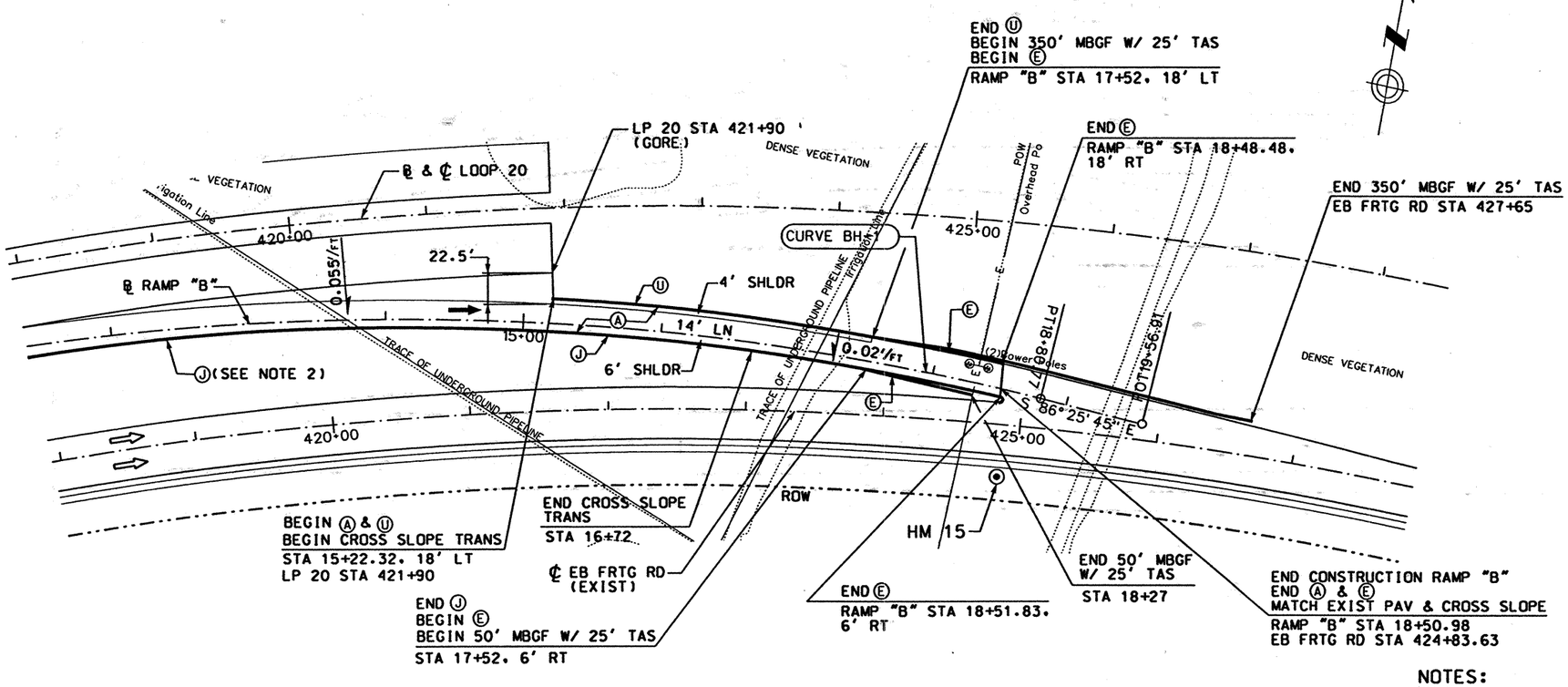

LEGEND:

- Ⓐ CONC PAV (CONT REINF HY STL)(12")
- Ⓑ ASPH CONC PAV (TY A)(4")
- Ⓒ LIME TREATED SUBGRADE (8")
- Ⓓ SINGLE SLOPE CONCRETE BARRIER (SSCB) (TYPE 2)
- Ⓔ TYPE II MONO CURB (6")
- Ⓕ CELL FIBER MULCH SEED (PERM) (RURAL)(CLAY)
- Ⓖ CLASS B RIPRAP (4")
- Ⓗ CONC SIDEWALK (4")
- Ⓘ CONC MEDIAN (6")
- Ⓙ SINGLE SLOPE TRAFFIC RAIL(SSTR) w/ DRAIN SLOTS
- Ⓚ RETAINING WALL
- Ⓛ METAL BEAM GUARD FENCE
- Ⓜ BRICK PAVERS
- Ⓝ REMOVE ASPH CONC PAV
- Ⓞ REMOVE CONC PAV
- Ⓟ TYPE II CURB AND GUTTER (6")
- Ⓠ CONCRETE DRIVEWAYS (6")
- Ⓡ ASPH CONC PAV (TY D)(2")
- Ⓢ ASPH CONC PAV (TY A)(8")
- Ⓣ PLANE ASPH CONC PAV (0 - 1")
- Ⓤ SINGLE SLOPE TRAFFIC RAIL (SSTR)
- Ⓥ CHAINLINK FENCE (6')
- Ⓦ ROADWAY UNDERDRAIN
- Ⓧ WHEELCHAIR RAMP TYPE B

NOTES:

1. SEE "GEOMETRIC DATA SUMMARY" FOR ALIGNMENT DATA.
2. SEE "LOOP 20 MAINLANES PLAN AND PROFILE" FOR MORE DETAILS.

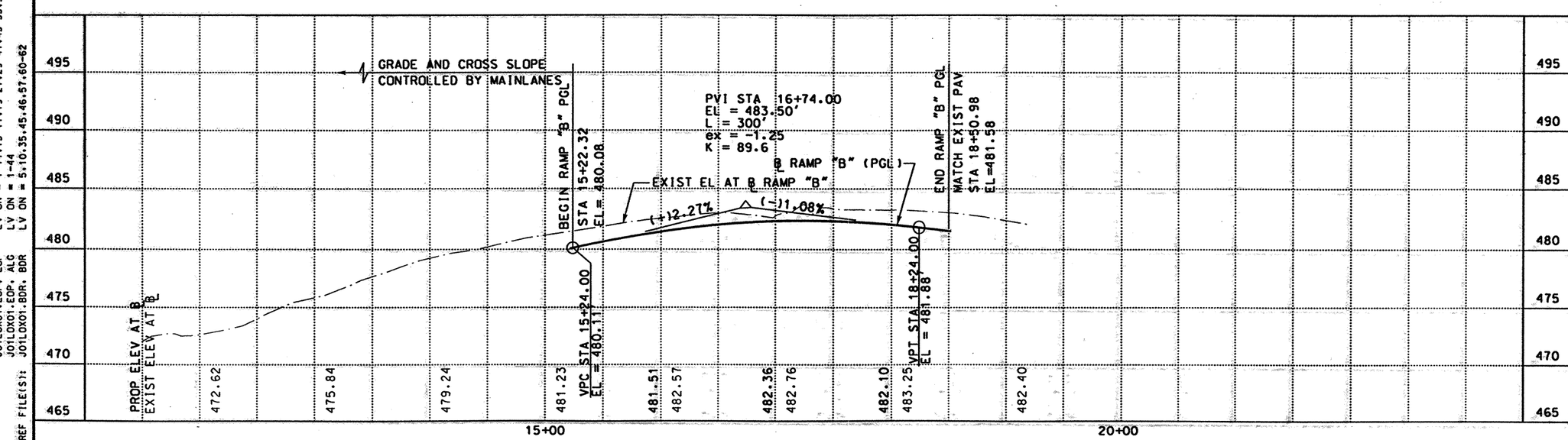

The seal appearing on this document was authorized by Derron S. Vincik P.E. 84028, on April 2, 1999.

DATE	BY	REV	REVISION

© 1999 Texas Department of Transportation

Brown & Root
HOUSTON, TEXAS

LOOP 20

RAMP "B"
PLAN AND PROFILE

0 50 100
SCALE: 1"=100' HORIZ
1"=10' VERT

SHEET 1 OF 1

FED RD DIV NO	STATE PROJECT NO	SHEET NO
6	C86-14-23	320

STATE	STATE DIST NO	COUNTY
TEXAS	22	WEBB

CONT	SECT	JOB	HIGHWAY NO
0086	14	023	LOOP 20

REF FILE(S): J01LDX01.PRO, PRO LV ON = 1-63
J01LDX01.UTI, UTI LV ON = 1-63
J01LDX01.ILL, ILL LV ON = 20
J01LDX01.FND, FND LV ON = 35
J01LDX01.DRN, DRN LV ON = 8

REF FILE(S): J01LDX01.BCK, BCK LV ON = 1-30
J01LDX01.EDP, EDP LV ON = 1-11,13-17,19-27,29-41,43-53,5
J01LDX01.EDP, ALG LV ON = 1-44
J01LDX01.BDR, BDR LV ON = 5,10,35,45,46,57,60-62

D03RAX02.DGN-10 04-02-99 BAR_HO_ES05 \HCIVIL\CF0039\PHASE2

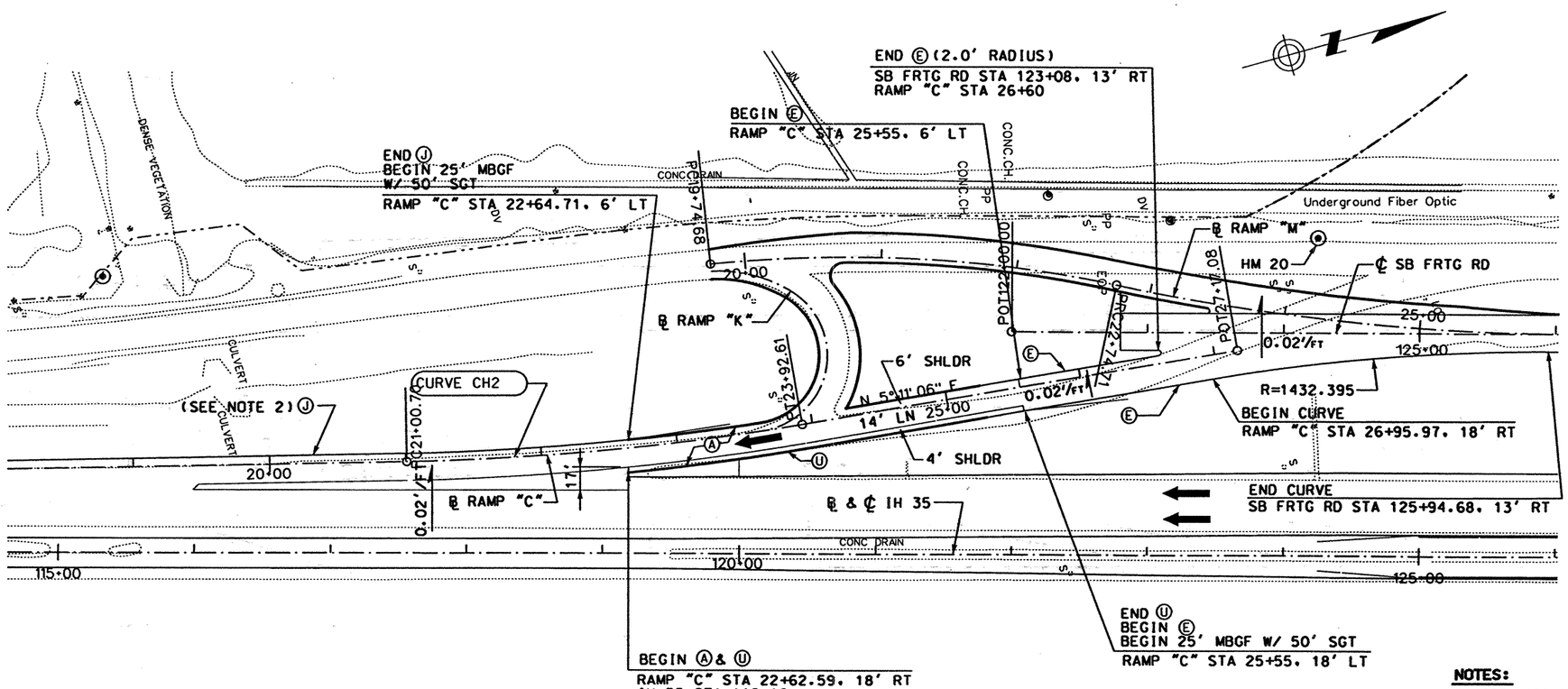

LEGEND:

- Ⓐ CONC PAV (CONT REINF HY STL)(12")
- Ⓑ ASPH CONC PAV (TY A)(4")
- Ⓒ LIME TREATED SUBGRADE (8")
- Ⓓ SINGLE SLOPE CONCRETE BARRIER (SSCB) (TYPE 2)
- Ⓔ TYPE II MONO CURB (6")
- Ⓕ CELL FIBER MULCH SEED (PERM) (RURAL)(CLAY)
- Ⓖ CLASS B RIPRAP (4")
- Ⓗ CONC SIDEWALK (4")
- Ⓘ CONC MEDIAN (6")
- Ⓙ SINGLE SLOPE TRAFFIC RAIL(SSTR) w/ DRAIN SLOTS
- Ⓚ RETAINING WALL
- Ⓛ METAL BEAM GUARD FENCE
- Ⓜ BRICK PAVERS
- Ⓝ REMOVE ASPH CONC PAV
- Ⓞ REMOVE CONC PAV
- Ⓟ TYPE II CURB AND GUTTER (6")
- Ⓠ CONCRETE DRIVEWAYS (6")
- Ⓡ ASPH CONC PAV (TY D)(2")
- Ⓢ ASPH CONC PAV (TY A)(8")
- Ⓣ PLANE ASPH CONC PAV (0 - 1")
- Ⓤ SINGLE SLOPE TRAFFIC RAIL (SSTR)
- Ⓥ CHAINLINK FENCE (6')
- Ⓦ ROADWAY UNDERDRAIN
- Ⓧ WHEELCHAIR RAMP TYPE B

NOTES:

1. SEE "GEOMETRIC DATA SUMMARY" FOR ALIGNMENT DATA.
2. SEE "IH 35 MAINLANE PLAN AND PROFILE" FOR MORE DETAILS
3. SEE "SOUTHBOUND FRONTAGE ROAD PLAN AND PROFILE" FOR MORE DETAILS.
4. SEE "RAMP "K" & "M" PLAN AND PROFILE" FOR MORE DETAILS.
5. SEE "REMOVAL LAYOUT" FOR MORE DETAILS.

STATE OF TEXAS
DERRON S. VINCIK
84028
REGISTERED PROFESSIONAL ENGINEER

The seal appearing on this document was authorized by Derron S. Vincik P.E. 84028, on April 2, 1999.

Derron S. Vincik

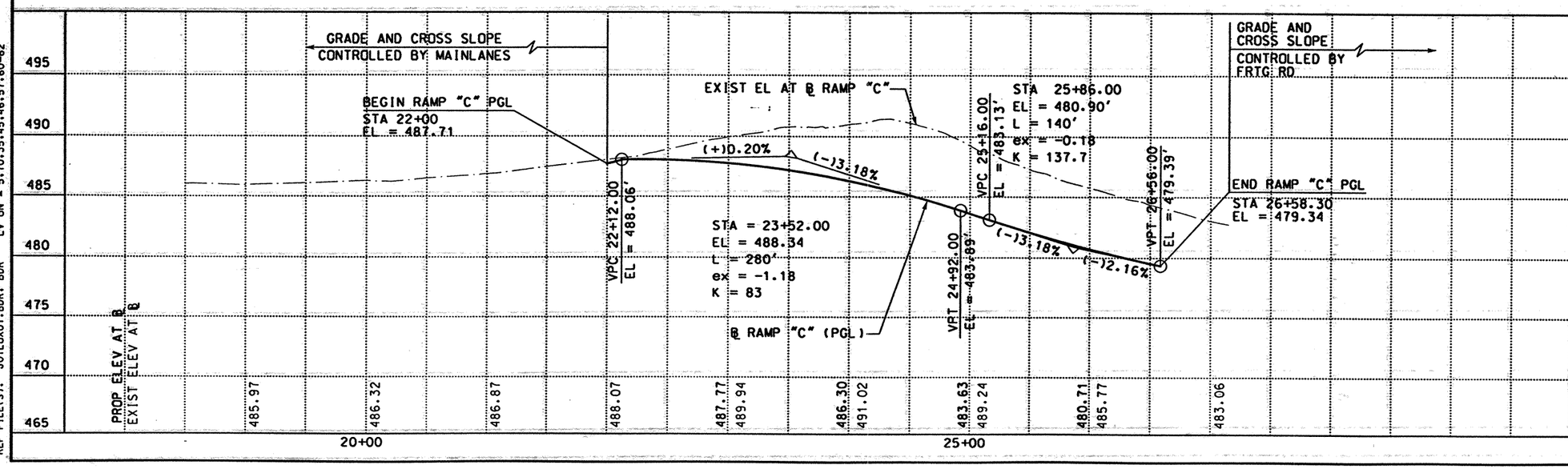

DATE	BY	REV	REVISION

© 1999 Texas Department of Transportation

Brown & Root
HOUSTON, TEXAS

IH 35

RAMP "C"
PLAN AND PROFILE

0 50 100
SCALE: 1"=100' HORIZ
1"=10' VERT

SHEET 1 OF 1

FED RD DIV NO	STATE PROJECT NO		SHEET NO
6	NH-99(462)		321
STATE	STATE DIST NO		COUNTY
TEXAS	22		WEBB
CONT	SECT	JOB	HIGHWAY NO
0018	06	131	IH 35

D03RAX03.DGN-09 04-02-99 BAR_HO_ES05 \HCIVIL\CF0039\PHASE2

REF FILE(S): J01LOX01.PRO, PRO LV ON = 1-63
J01LOX01.UTI, UTI LV ON = 1-63
J01LOX01.ILL, ILL LV ON = 20
J01LOX01.FND, FND LV ON = 35
J01LOX01.DRN, DRN LV ON = 8

REF FILE(S): J01LOX01.BCK, BCK LV ON = 1-30
J01LOX01.EOP, EOP LV ON = 1-11,13-17,19-27,29-41,43-53,5
J01LOX01.EOP, ALG LV ON = 1-44
J01LOX01.BDR, BDR LV ON = 5,10,35,45,46,57,60-62

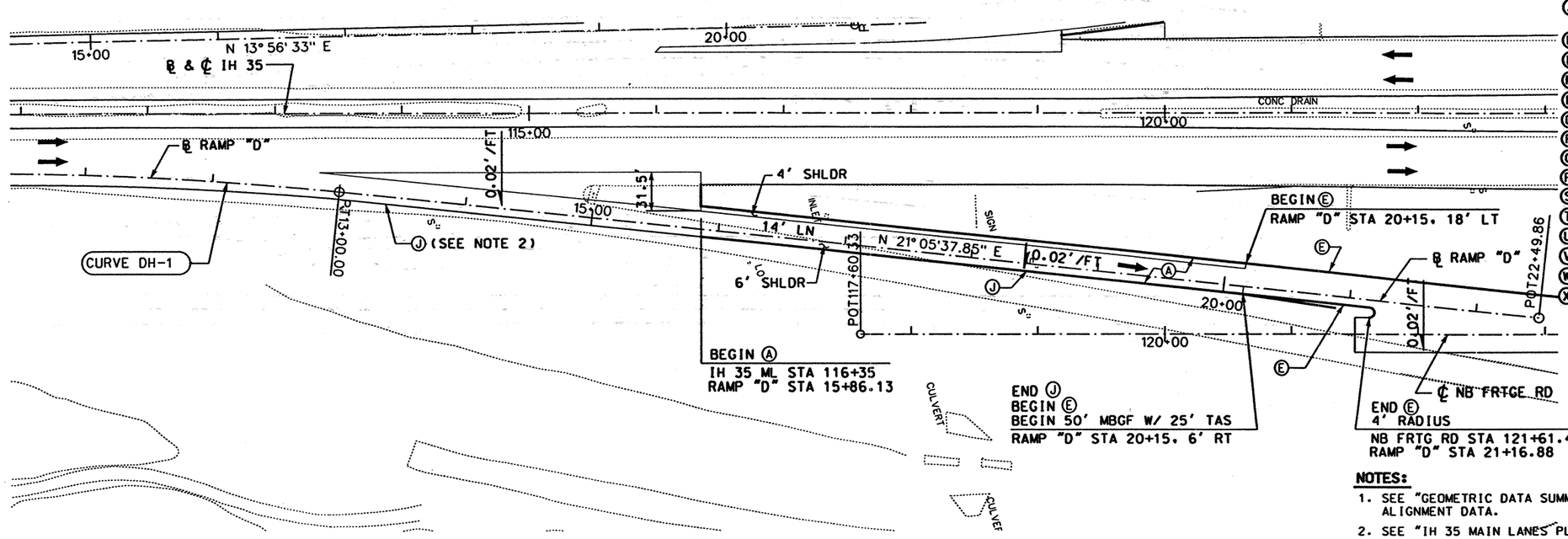

LEGEND:

- (A) CONC PAV (CONT REINF HY STL)(12")
- (B) ASPH CONC PAV (TY A)(4")
- (C) LIME TREATED SUBGRADE (8")
- (D) SINGLE SLOPE CONCRETE BARRIER (SSCB) (TYPE 2)
- (E) TYPE II MONO CURB (6")
- (F) CELL FIBER MULCH SEED (PERM) (RURAL)(CLAY)
- (G) CLASS B RIPRAP (4")
- (H) CONC SIDEWALK (4")
- (I) CONC MEDIAN (6")
- (J) SINGLE SLOPE TRAFFIC RAIL(SSTR) w/ DRAIN SLOTS
- (K) RETAINING WALL
- (L) METAL BEAM GUARD FENCE
- (M) BRICK PAVERS
- (N) REMOVE ASPH CONC PAV
- (O) REMOVE CONC PAV
- (P) TYPE II CURB AND GUTTER (6")
- (Q) CONCRETE DRIVEWAYS (6")
- (R) ASPH CONC PAV (TY D)(2")
- (S) ASPH CONC PAV (TY A)(8")
- (T) PLANE ASPH CONC PAV (0 - 1")
- (U) SINGLE SLOPE TRAFFIC RAIL (SSTR)
- (V) CHAINLINK FENCE (6')
- (W) ROADWAY UNDERDRAIN
- (X) WHEELCHAIR RAMP TYPE B

NOTES:

1. SEE "GEOMETRIC DATA SUMMARY" FOR ALIGNMENT DATA.
2. SEE "IH 35 MAIN LANES PLAN & PROFILE" FOR MORE DETAILS.
3. SEE "NORTHBOUND FRONTAGE ROAD PLAN AND PROFILE" FOR MORE DETAILS.
4. SEE "REMOVAL LAYOUT" FOR MORE DETAILS.

STATE OF TEXAS
DERRON S. VINCIK
84028
REGISTERED PROFESSIONAL ENGINEER

The seal appearing on this document was authorized by Derron S. Vincik P.E. 84028, on April 2, 1999.

Derron S. Vincik

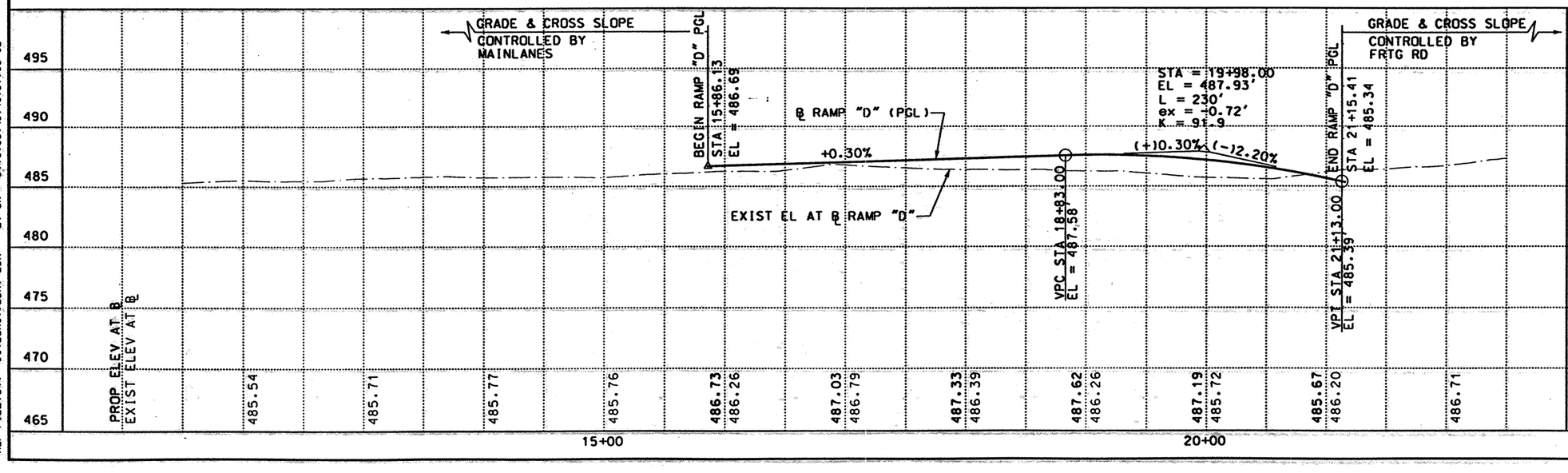

DATE	BY	REV	REVISION

© 1999 Texas Department of Transportation

Brown & Root
HOUSTON, TEXAS

IH 35

RAMP "D"
PLAN AND PROFILE

0 50 100
SCALE: 1"=100' HORZ
1"=10' VERT

SHEET 1 OF 1

FED RD DIV NO	STATE PROJECT NO	SHEET NO
6	NH-99(462)	322

STATE	STATE DIST NO	COUNTY
TEXAS	22	WEBB

CONT	SECT	JOB	HIGHWAY NO
0018	06	131	IH 35

REF FILE(S): J01LOX01.PRO, PRO LV ON = 1-63
J01LOX01.UTI, UTI LV ON = 1-63
J01LOX01.ILL, ILL LV ON = 20
J01LOX01.FND, FND LV ON = 35
J01LOX01.DRN, DRN LV ON = 8

REF FILE(S): J01LOX01.BCK, BCK LV ON = 1-30
J01LOX01.EDP, EDP LV ON = 1-11,13-17,19-27,29-41,43-53,5
J01LOX01.EDP, ALG LV ON = 1-44
J01LOX01.BDR, BDR LV ON = 5,10,35,45,46,57,60-62

D03RAX04.DGN-09 03-06-99 BAR_HO_ES05 \HCIVIL\CF0039\PHASE2

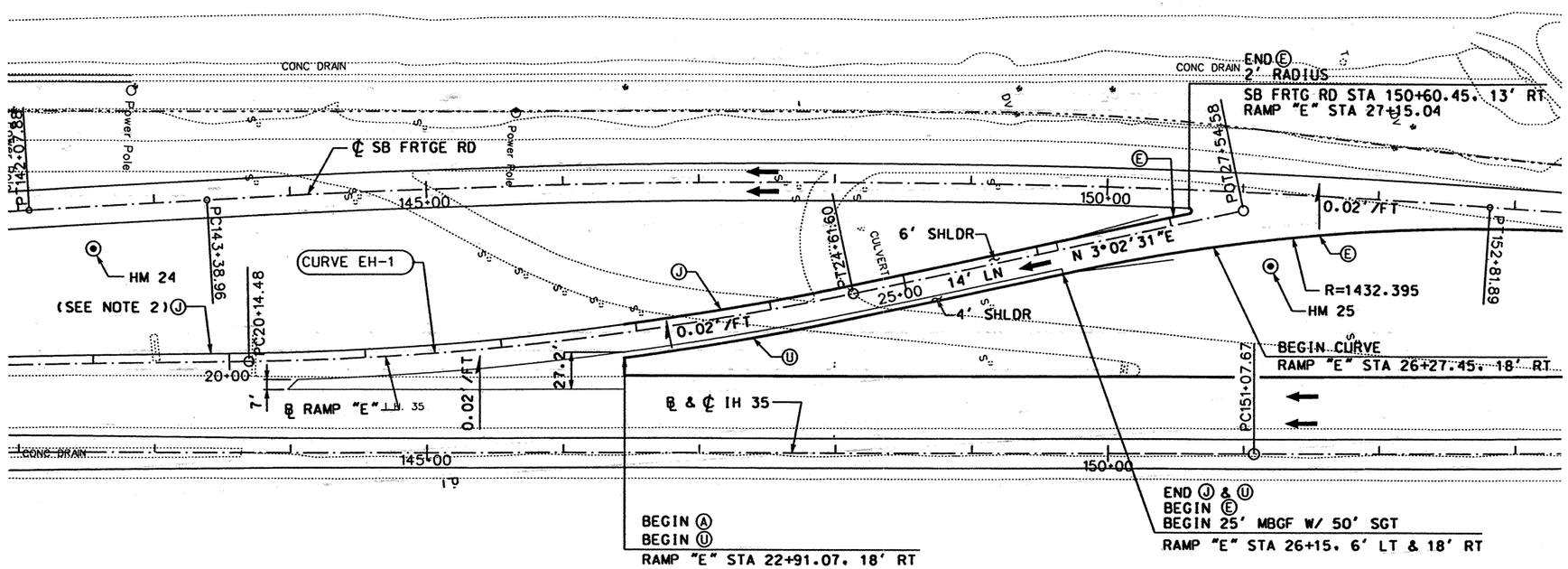

LEGEND:

- Ⓐ CONC PAV (CONT REINF HY STL)(12")
- Ⓑ ASPH CONC PAV (TY A)(4")
- Ⓒ LIME TREATED SUBGRADE (8")
- Ⓓ SINGLE SLOPE CONCRETE BARRIER (SSCB) (TYPE 2)
- Ⓔ TYPE II MONO CURB (6")
- Ⓕ CELL FIBER MULCH SEED (PERM) (RURAL)(CLAY)
- Ⓖ CLASS B RIPRAP (4")
- Ⓗ CONC SIDEWALK (4")
- Ⓘ CONC MEDIAN (6")
- Ⓙ SINGLE SLOPE TRAFFIC RAIL(SSTR) w/ DRAIN SLOTS
- Ⓚ RETAINING WALL
- Ⓛ METAL BEAM GUARD FENCE
- Ⓜ BRICK PAVERS
- Ⓝ REMOVE ASPH CONC PAV
- Ⓞ REMOVE CONC PAV
- Ⓟ TYPE II CURB AND GUTTER (6")
- Ⓠ CONCRETE DRIVEWAYS (6")
- Ⓡ ASPH CONC PAV (TY D)(2")
- Ⓢ ASPH CONC PAV (TY A)(8")
- Ⓣ PLANE ASPH CONC PAV (0 - 1")
- Ⓤ SINGLE SLOPE TRAFFIC RAIL (SSTR)
- Ⓥ CHAINLINK FENCE (6')
- Ⓦ ROADWAY UNDERDRAIN
- Ⓧ WHEELCHAIR RAMP TYPE B

NOTES:

1. SEE "GEOMETRIC DATA SUMMARY" FOR ALIGNMENT DATA.
2. SEE "IH 35 MAIN LANE PLAN AND PROFILE" FOR MORE DETAILS.
3. SEE "SOUTHBOUND FRONTAGE ROAD PLAN AND PROFILE" FOR MORE DETAILS.
4. SEE "REMOVAL LAYOUT" FOR MORE DETAILS.

STATE OF TEXAS
DERRON S. VINCIK
84028
REGISTERED PROFESSIONAL ENGINEER

The seal appearing on this document was authorized by Derron S. Vincik P.E. 84028, on April 2, 1999.

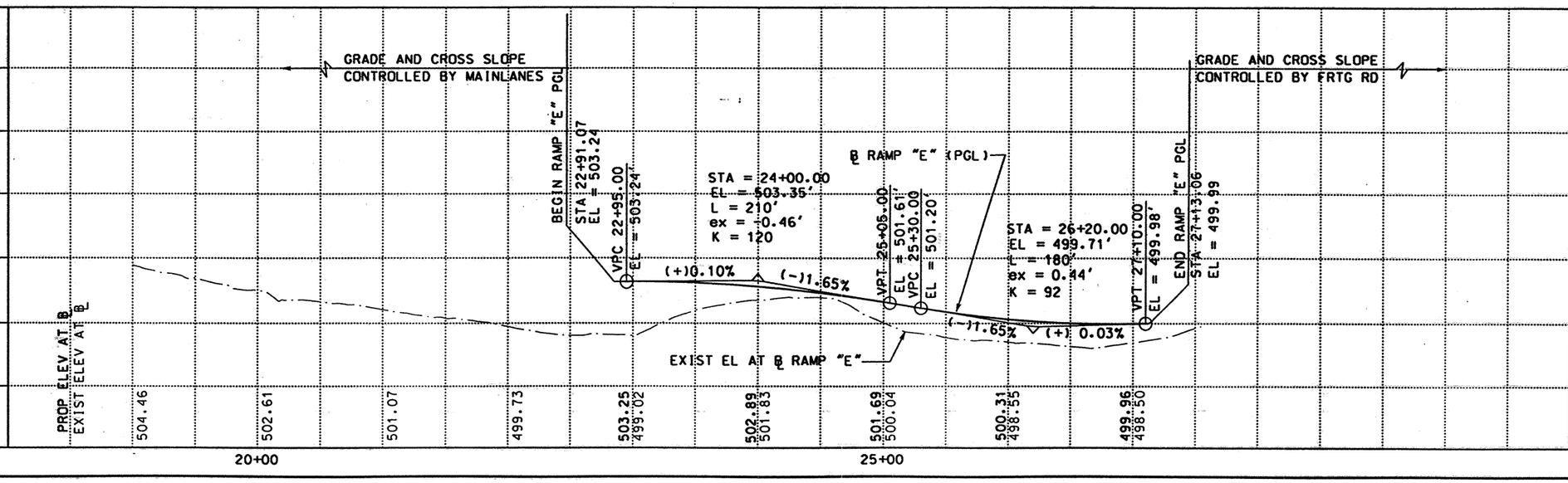

DATE	BY	REV	REVISION

© 1999 Texas Department of Transportation

Brown & Root
HOUSTON, TEXAS

IH 35

RAMP "E"
PLAN AND PROFILE

0 50 100
SCALE: 1"=100' HORZ
1"=10' VERT

SHEET 1 OF 1

FED RD DIV NO	STATE PROJECT NO		SHEET NO
6	NH-99(462)		323
STATE	STATE DIST NO	COUNTY	
TEXAS	22	WEBB	
CONT	SECT	JOB	HIGHWAY NO
0018	06	131	IH 35

REF FILE(S): J01LOX01.PRO, PRO LV ON = 1-63
J01LOX01.UTI, UTI LV ON = 1-63
J01LOX01.ILL, ILL LV ON = 20
J01LOX01.FND, FND LV ON = 35
J01LOX01.DRN, DRN LV ON = 8

REF FILE(S): J01LOX01.BCK, BCK LV ON = 1-30
J01LOX01.EOP, EOP LV ON = 1-11,13-17,19-27,29-41,43-53,5
J01LOX01.EOP, ALG LV ON = 1-44
J01LOX01.BOR, BOR LV ON = 5,10,35,45,46,57,60-62

D03RAX05.DGN-10 04-02-99 BAR_HO_ES05 \HCIVIL\CF0039\PHASE2

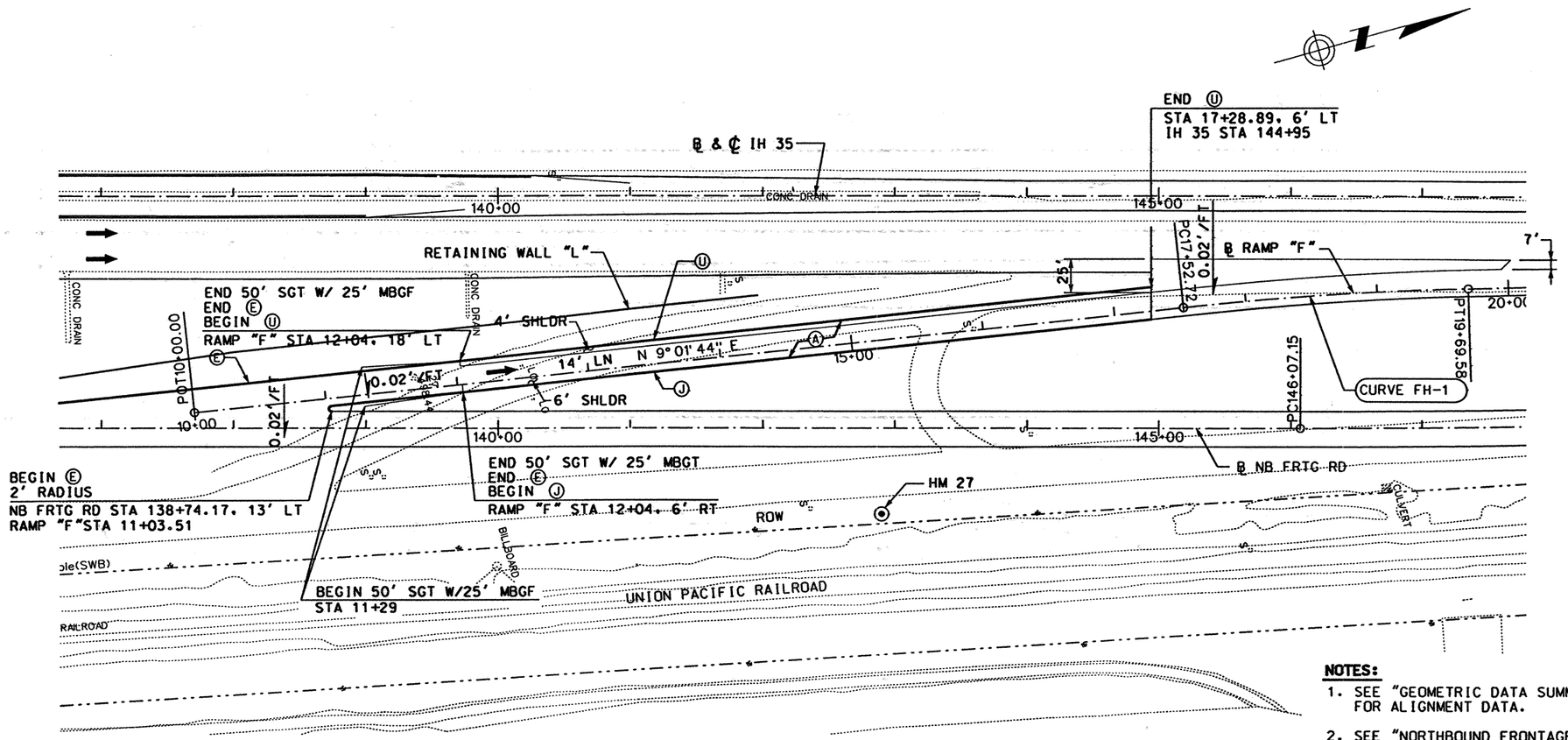

LEGEND:

- Ⓐ CONC PAV (CONT REINF HY STL)(12")
- Ⓑ ASPH CONC PAV (TY A)(4")
- Ⓒ LIME TREATED SUBGRADE (8")
- Ⓓ SINGLE SLOPE CONCRETE BARRIER (SSCB) (TYPE 2)
- Ⓔ TYPE II MONO CURB (6")
- Ⓕ CELL FIBER MULCH SEED (PERM) (RURAL)(CLAY)
- Ⓖ CLASS B RIPRAP (4")
- Ⓗ CONC SIDEWALK (4")
- Ⓘ CONC MEDIAN (6")
- Ⓙ SINGLE SLOPE TRAFFIC RAIL(SSTR) w/ DRAIN SLOTS
- Ⓚ RETAINING WALL
- Ⓛ METAL BEAM GUARD FENCE
- Ⓜ BRICK PAVERS
- Ⓝ REMOVE ASPH CONC PAV
- Ⓞ REMOVE CONC PAV
- Ⓟ TYPE II CURB AND GUTTER (6")
- Ⓠ CONCRETE DRIVEWAYS (6")
- Ⓡ ASPH CONC PAV (TY D)(2")
- Ⓢ ASPH CONC PAV (TY A)(8")
- Ⓣ PLANE ASPH CONC PAV (0 - 1")
- Ⓤ SINGLE SLOPE TRAFFIC RAIL (SSTR)
- Ⓥ CHAINLINK FENCE (6')
- Ⓦ ROADWAY UNDERDRAIN
- Ⓧ WHEELCHAIR RAMP TYPE B

NOTES:

1. SEE "GEOMETRIC DATA SUMMARY" FOR ALIGNMENT DATA.
2. SEE "NORTHBOUND FRONTAGE ROAD PLAN AND PROFILE" FOR MORE DETAILS.
3. SEE "IH 35 MAINLANES PLAN AND PROFILE" FOR MORE DETAILS.
4. SEE "REMOVAL LAYOUT" FOR MORE DETAILS.

STATE OF TEXAS
DERRON S. VINCIK
84028
REGISTERED PROFESSIONAL ENGINEER

The seal appearing on this document was authorized by Derron S. Vincik P.E. 84028, on April 2, 1999.

Derron S. Vincik

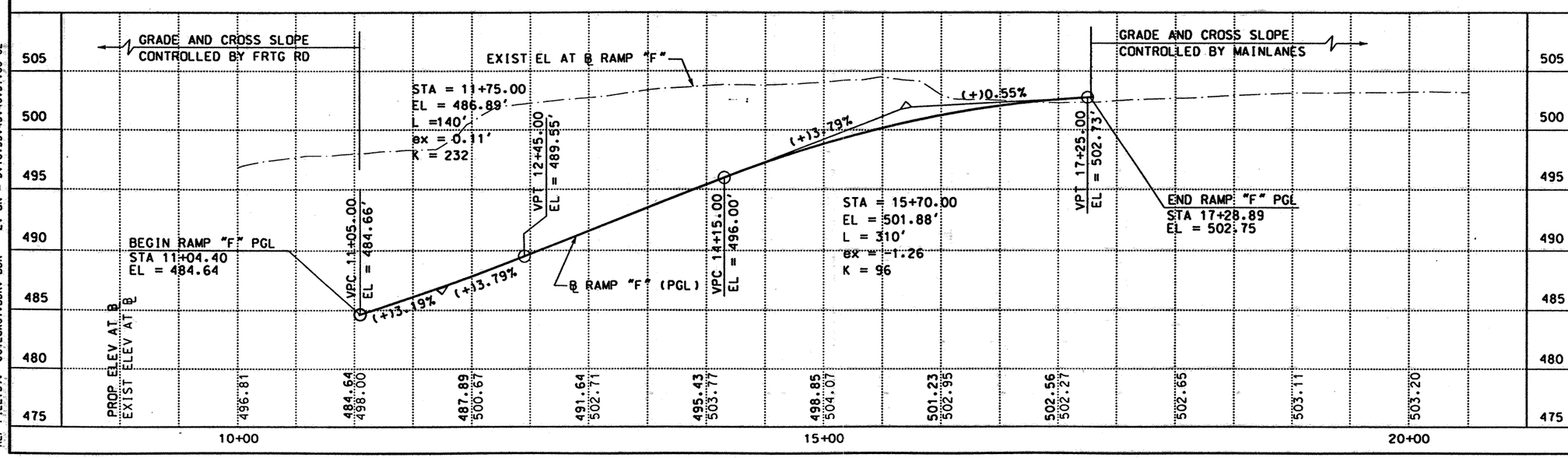

DATE	BY	REV	REVISION

© 1999
Texas Department of Transportation

Brown & Root
HOUSTON, TEXAS

IH 35

RAMP "F"
PLAN AND PROFILE

0 50 100
SCALE: 1"=100' HORZ
1"=10' VERT

SHEET 1 OF 1

FED RD DIV NO	STATE PROJECT NO		SHEET NO
6	NH-99(462)		324
STATE	STATE DIST NO	COUNTY	
TEXAS	22	WEBB	
CONT	SECT	JOB	HIGHWAY NO
0018	06	131	IH 35

D03RAX06.DGN-07 03-06-99 BAR_HO_ES05 \HCIVIL\CF0039\PHASE2

REF FILE(S): J01LDX01.PRO, PRO LV ON = 1-63
J01LDX01.UTI, UTI LV ON = 1-63
J01LDX01.ILL, ILL LV ON = 20
J01LDX01.FND, FND LV ON = 35
J01LDX01.DRN, DRN LV ON = 8

REF FILE(S): J01LDX01.BCK, BCK LV ON = 1-30
J01LDX01.EOP, EOP LV ON = 1-11,13-17,19-27,29-41,43-53,5
J01LDX01.EOP, ALG LV ON = 1-44
J01LDX01.BDR, BDR LV ON = 5,10,35,45,46,57,60-62

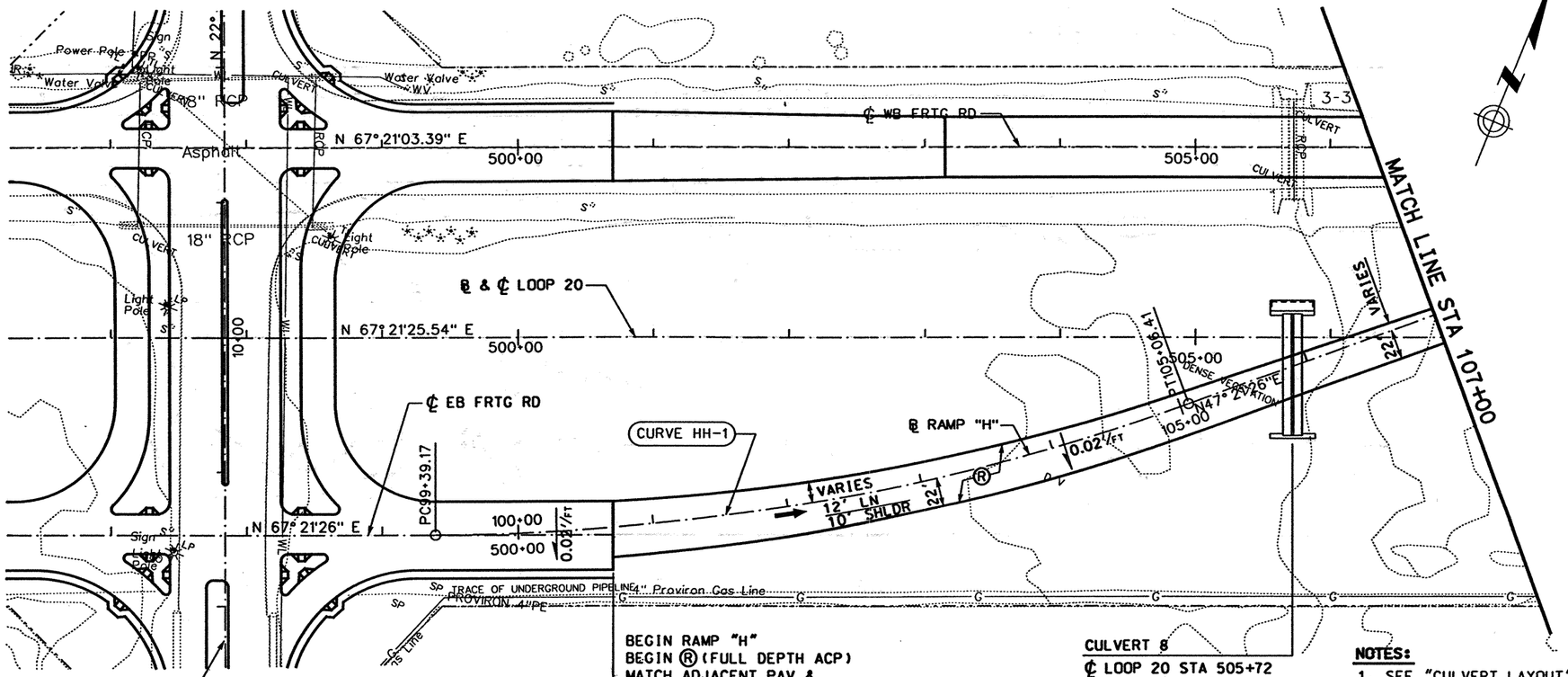

LEGEND:

- Ⓐ CONC PAV (CONT REINF HY STL)(12")
- Ⓑ ASPH CONC PAV (TY A)(4")
- Ⓒ LIME TREATED SUBGRADE (8")
- Ⓓ SINGLE SLOPE CONCRETE BARRIER (SSCB) (TYPE 2)
- Ⓔ TYPE II MONO CURB (6")
- Ⓕ CELL FIBER MULCH SEED (PERM) (RURAL)(CLAY)
- Ⓖ CLASS B RIPRAP (4")
- Ⓗ CONC SIDEWALK (4")
- Ⓘ CONC MEDIAN (6")
- Ⓙ SINGLE SLOPE TRAFFIC RAIL(SSTR) w/ DRAIN SLOTS
- Ⓚ RETAINING WALL
- Ⓛ METAL BEAM GUARD FENCE
- Ⓜ BRICK PAVERS
- Ⓝ REMOVE ASPH CONC PAV
- Ⓞ REMOVE CONC PAV
- Ⓟ TYPE II CURB AND GUTTER (6")
- Ⓠ CONCRETE DRIVEWAYS (6")
- Ⓡ ASPH CONC PAV (TY D)(2")
- Ⓢ ASPH CONC PAV (TY A)(8")
- Ⓣ PLANE ASPH CONC PAV (0 - 1")
- Ⓤ SINGLE SLOPE TRAFFIC RAIL (SSTR)
- Ⓥ CHAINLINK FENCE (6')
- Ⓦ ROADWAY UNDERDRAIN
- Ⓧ WHEELCHAIR RAMP TYPE B

NOTES:

1. SEE "CULVERT LAYOUT" FOR MORE DETAILS.
2. SEE "EASTBOUND FRONTAGE ROAD PLAN AND PROFILE" FOR MORE DETAILS.
3. SEE "SIGNING AND PAVEMENT MARKINGS" FOR MORE DETAILS.

STATE OF TEXAS
DERRON S. VINCIK
P.E. 84028
REGISTERED PROFESSIONAL ENGINEER

The seal appearing on this document was authorized by Derron S. Vincik P.E. 84028, on April 2, 1999.

Derron S. Vincik

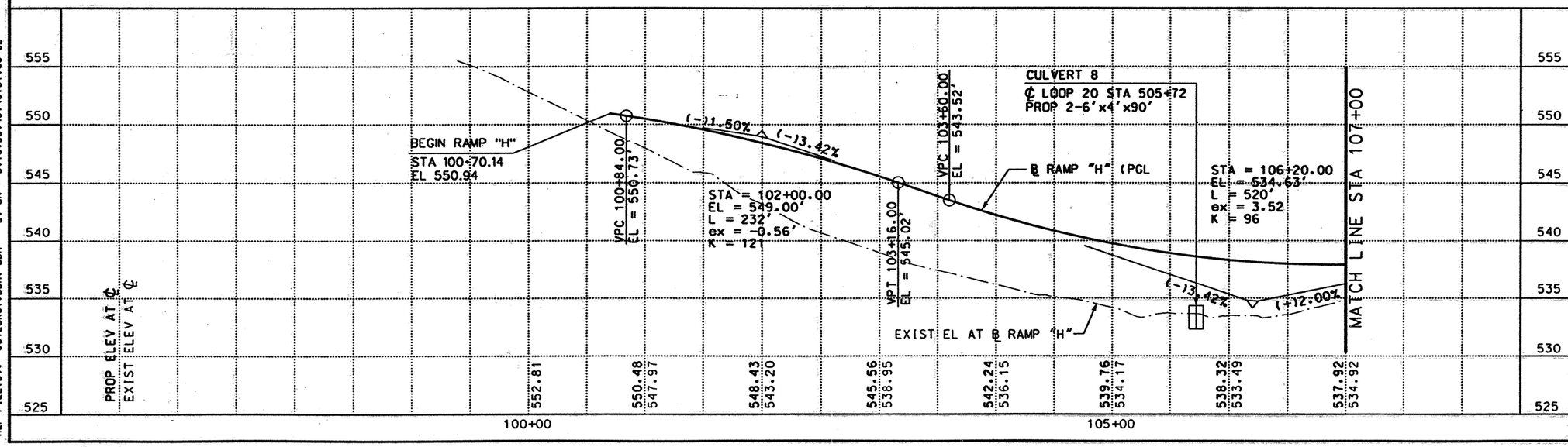

DATE	BY	REV	REVISION

© 1999 Texas Department of Transportation

Brown & Root
HOUSTON, TEXAS

LOOP 20

TEMPORARY ACCESS
RAMP "H"
PLAN AND PROFILE
STA 100+70.14 TO
STA 107+00

0 50 100
SCALE: 1"=100' HORIZ
1"=10' VERT

SHEET 1 OF 2

FED RD DIV NO	STATE PROJECT NO	SHEET NO
6	C86-14-23	325

STATE	STATE DIST NO	COUNTY
TEXAS	22	WEBB

CONT	SECT	JOB	HIGHWAY NO
0086	14	023	LOOP 20

REF FILE(S): J01LOX01.PRO, PRO LV ON = 1-63
J01LOX01.UTI, UTI LV ON = 1-63
J01LOX01.ILL, ILL LV ON = 20
J01LOX01.FND, FND LV ON = 35
J01LOX01.DRN, DRN LV ON = 8

REF FILE(S): J01LOX01.BCK, BCK LV ON = 1-30
J01LOX01.EOP, ALG LV ON = 1-44
J01LOX01.BDR, BDR LV ON = 5:10,35,45,46,57,60-62

D03TRX01.DGN-07 03-06-99 BAR_HO_ES05 \HCIVIL\CF0039\PHASE2

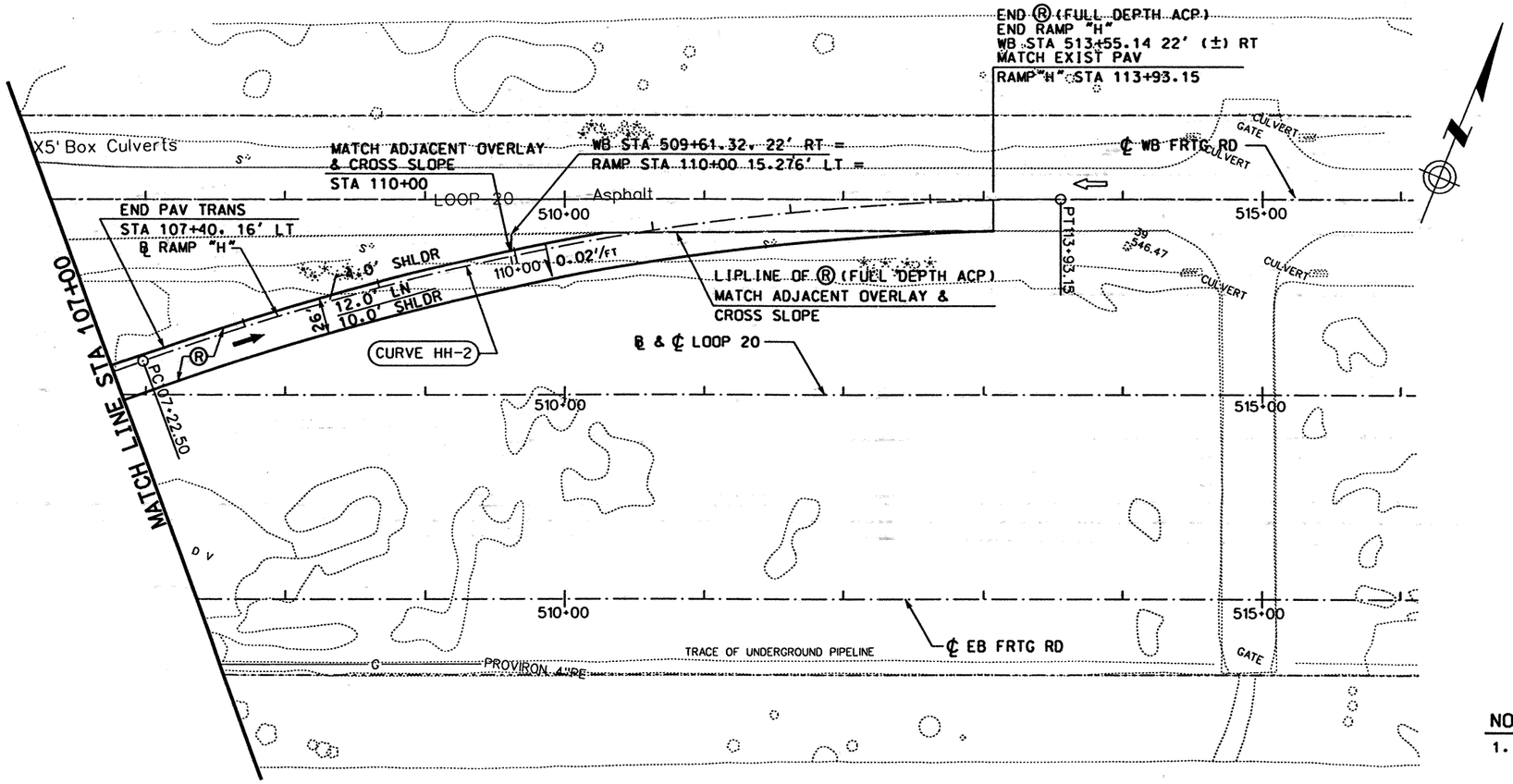

LEGEND:

- Ⓐ CONC PAV (CONT REINF HY STL)(12")
- Ⓑ ASPH CONC PAV (TY A)(4")
- Ⓒ LIME TREATED SUBGRADE (8")
- Ⓓ SINGLE SLOPE CONCRETE BARRIER (SSCB) (TYPE 2)
- Ⓔ TYPE II MONO CURB (6")
- Ⓕ CELL FIBER MULCH SEED (PERM) (RURAL)(CLAY)
- Ⓖ CLASS B RIPRAP (4")
- Ⓗ CONC SIDEWALK (4")
- Ⓘ CONC MEDIAN (6")
- Ⓙ SINGLE SLOPE TRAFFIC RAIL(SSTR) w/ DRAIN SLOTS
- Ⓚ RETAINING WALL
- Ⓛ METAL BEAM GUARD FENCE
- Ⓜ BRICK PAVERS
- Ⓝ REMOVE ASPH CONC PAV
- Ⓞ REMOVE CONC PAV
- Ⓟ TYPE II CURB AND GUTTER (6")
- Ⓠ CONCRETE DRIVEWAYS (6")
- Ⓡ ASPH CONC PAV (TY D)(2")
- Ⓢ ASPH CONC PAV (TY A)(8")
- Ⓣ PLANE ASPH CONC PAV (0 - 1")
- Ⓤ SINGLE SLOPE TRAFFIC RAIL (SSTR)
- Ⓥ CHAINLINK FENCE (6')
- Ⓦ ROADWAY UNDERDRAIN
- Ⓧ WHEELCHAIR RAMP TYPE B

NOTES:

1. SEE "WESTBOUND FRONTAGE ROAD PLAN AND PROFILE" FOR MORE DETAILS.
2. SEE "SIGNING AND PAVEMENT MARKINGS" FOR MORE DETAILS.

STATE OF TEXAS
DERRON S. VINCIK
84028
REGISTERED PROFESSIONAL ENGINEER

The seal appearing on this document was authorized by Derron S. Vincik P.E. 84028, on April 2, 1999.

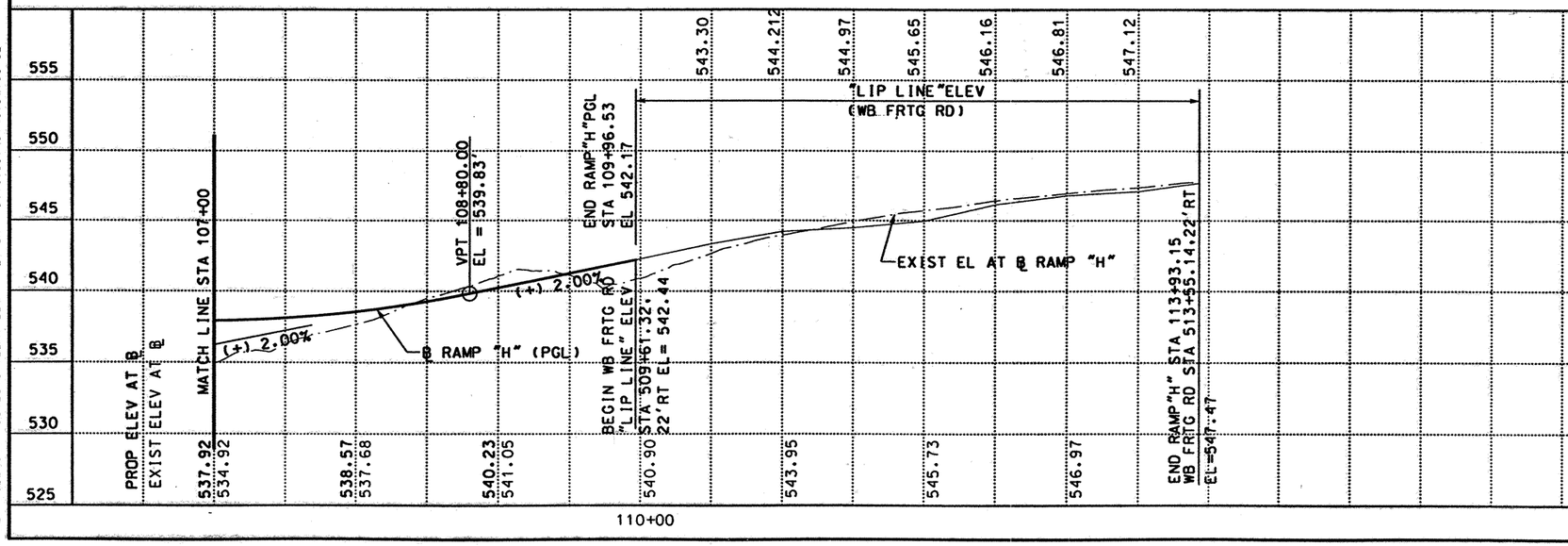

DATE	BY	REV	REVISION

© 1999 Texas Department of Transportation

Brown & Root
HOUSTON, TEXAS

LOOP 20

RAMP "H"
PLAN AND PROFILE
STA 107+00 TO
STA 113+93.10

0 50 100
SCALE: 1"=100' HORIZ
1"=10' VERT

SHEET 2 OF 2

FED RD DIV NO	STATE PROJECT NO		SHEET NO
6	C86-14-23		326
STATE	STATE DIST NO		COUNTY
TEXAS	22		WEBB
CONT	SECT	JOB	HIGHWAY NO
0086	14	023	LOOP 20

REF FILE(S): J01LOX01.PRO, PRO LV ON = 1-63
J01LOX01.UTI, UTI LV ON = 1-63
J01LOX01.ILL, ILL LV ON = 20
J01LOX01.FND, FND LV ON = 35
J01LOX01.DRN, DRN LV ON = 8

REF FILE(S): J01LOX01.BCK, BCK LV ON = 1-30
J01LOX01.EOP, ALG LV ON = 1-44
J01LOX01.BDR, BDR LV ON = 5,10,35,45,46,57,60-62

03-12-99 BAR_HO_ES05 \HCIVIL\CF0039\PHASE2
D03TRX02.DGN-07

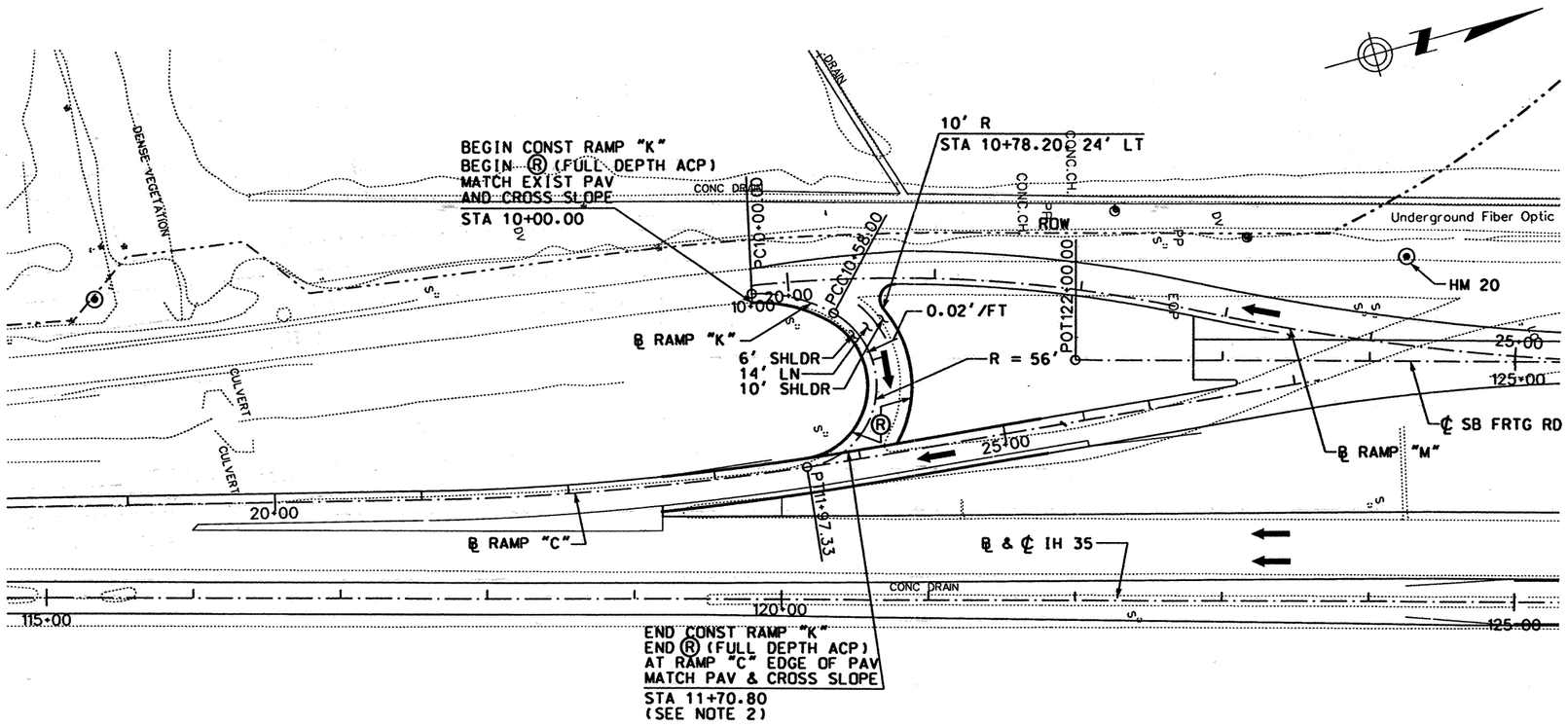

LEGEND:

- Ⓐ CONC PAV (CONT REINF HY STL)(12")
- Ⓑ ASPH CONC PAV (TY A)(4")
- Ⓒ LIME TREATED SUBGRADE (8")
- Ⓓ SINGLE SLOPE CONCRETE BARRIER (SSCB) (TYPE 2)
- Ⓔ TYPE II MONO CURB (6")
- Ⓕ CELL FIBER MULCH SEED (PERM) (RURAL)(CLAY)
- Ⓖ CLASS B RIPRAP (4")
- Ⓗ CONC SIDEWALK (4")
- Ⓘ CONC MEDIAN (6")
- Ⓙ SINGLE SLOPE TRAFFIC RAIL(SSTR) w/ DRAIN SLOTS
- Ⓚ RETAINING WALL
- Ⓛ METAL BEAM GUARD FENCE
- Ⓜ BRICK PAVERS
- Ⓝ REMOVE ASPH CONC PAV
- Ⓞ REMOVE CONC PAV
- Ⓟ TYPE II CURB AND GUTTER (6")
- Ⓠ CONCRETE DRIVEWAYS (6")
- Ⓡ ASPH CONC PAV (TY D)(2")
- Ⓢ ASPH CONC PAV (TY A)(8")
- Ⓣ PLANE ASPH CONC PAV (0 - 1")
- Ⓤ SINGLE SLOPE TRAFFIC RAIL (SSTR)
- Ⓥ CHAINLINK FENCE (6')
- Ⓦ ROADWAY UNDERDRAIN
- Ⓧ WHEELCHAIR RAMP TYPE B

NOTES:

1. SEE "GEOMETRIC DATA SUMMARY" FOR ALIGNMENT DATA.
2. SEE "RAMP "C" AND "M" PLAN AND PROFILE" FOR DETAILS.
3. SEE "REMOVAL LAYOUT" FOR MORE DETAILS.

STATE OF TEXAS
DERRON S. VINCIK
84028
REGISTERED PROFESSIONAL ENGINEER

The seal appearing on this document was authorized by Derron S. Vincik P.E. 84028, on April 2, 1999.

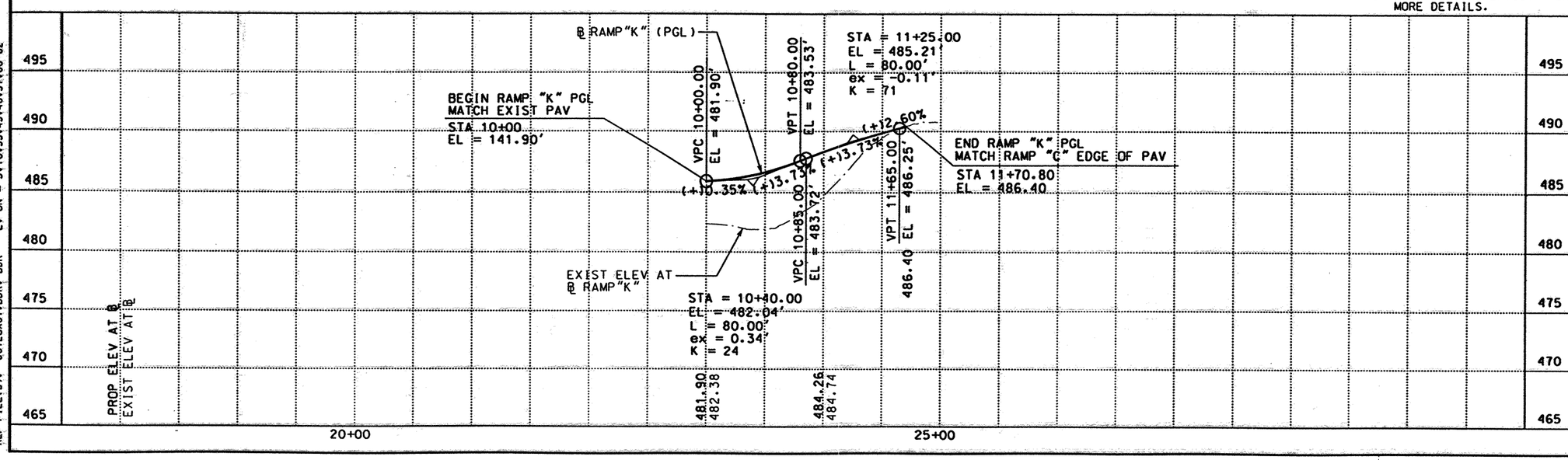

DATE	BY	REV	REVISION

© 1999 Texas Department of Transportation

Brown & Root
HOUSTON, TEXAS

IH 35

RAMP "K"
PLAN AND PROFILE

0 50 100
SCALE: 1"=100' HORZ
1"=10' VERT

SHEET 1 OF 1

FED RD DIV NO	STATE PROJECT NO	SHEET NO
6	NH-99(462)	327

STATE	STATE DIST NO	COUNTY
TEXAS	22	WEBB

CONT	SECT	JOB	HIGHWAY NO
0018	06	131	IH 35

REF FILE(S): J01LOX01.PRO, PRO LV ON = 1-63
J01LOX01.UTI, UTI LV ON = 1-63
J01LOX01.ILL, ILL LV ON = 20
J01LOX01.FND, FND LV ON = 35
J01LOX01.DRN, DRN LV ON = 8

REF FILE(S): J01LOX01.BCK, BCK LV ON = 1-30
J01LOX01.EDP, EDP LV ON = 1-11,13-17,19-27,29-41,43-53,5
J01LOX01.ALG, ALG LV ON = 1-44
J01LOX01.BDR, BDR LV ON = 5,10,35,45,46,57,60-62

D03RAX07.DGN-05 04-02-99 BAR_HO_ES05 \HCIVIL\CF0039\PHASE2

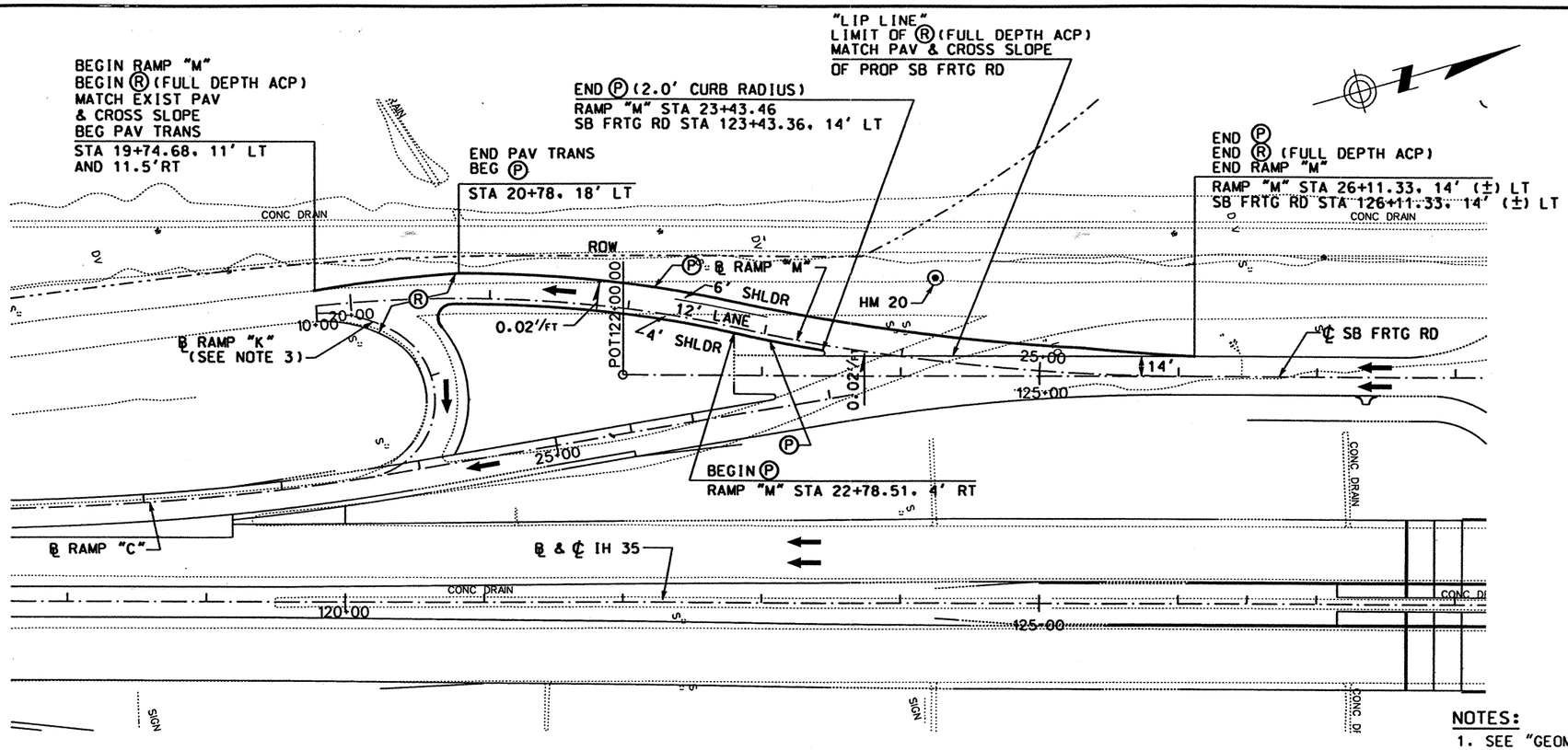

LEGEND:

- Ⓐ CONC PAV (CONT REINF HY STL)(12")
- Ⓑ ASPH CONC PAV (TY A)(4")
- Ⓒ LIME TREATED SUBGRADE (8")
- Ⓓ SINGLE SLOPE CONCRETE BARRIER (SSCB) (TYPE 2)
- Ⓔ TYPE II MONO CURB (6")
- Ⓕ CELL FIBER MULCH SEED (PERM) (RURAL)(CLAY)
- Ⓖ CLASS B RIPRAP (4")
- Ⓗ CONC SIDEWALK (4")
- Ⓘ CONC MEDIAN (6")
- Ⓙ SINGLE SLOPE TRAFFIC RAIL(SSTR) w/ DRAIN SLOTS
- Ⓚ RETAINING WALL
- Ⓛ METAL BEAM GUARD FENCE
- Ⓜ BRICK PAVERS
- Ⓝ REMOVE ASPH CONC PAV
- Ⓞ REMOVE CONC PAV
- Ⓟ TYPE II CURB AND GUTTER (6")
- Ⓠ CONCRETE DRIVEWAYS (6")
- Ⓡ ASPH CONC PAV (TY D)(2")
- Ⓢ ASPH CONC PAV (TY A)(8")
- Ⓣ PLANE ASPH CONC PAV (0 - 1")
- Ⓤ SINGLE SLOPE TRAFFIC RAIL (SSTR)
- Ⓥ CHAINLINK FENCE (6')
- Ⓦ ROADWAY UNDERDRAIN
- Ⓧ WHEELCHAIR RAMP TYPE B

NOTES:

1. SEE "GEOMETRIC DATA SUMMARY" FOR ALIGNMENT DATA.
2. SEE "SOUTHBOUND FRONTAGE RD PLAN AND PROFILE" FOR MORE DETAILS.
3. SEE "RAMP "K" PLAN AND PROFILE" FOR MORE DETAILS.
4. SEE "REMOVAL LAYOUT" FOR MORE DETAILS.

STATE OF TEXAS
DERRON S. VINCIK
84028
REGISTERED PROFESSIONAL ENGINEER

The seal appearing on this document was authorized by Derron S. Vincik P.E. 84028, on April 2, 1999.

Derron S. Vincik

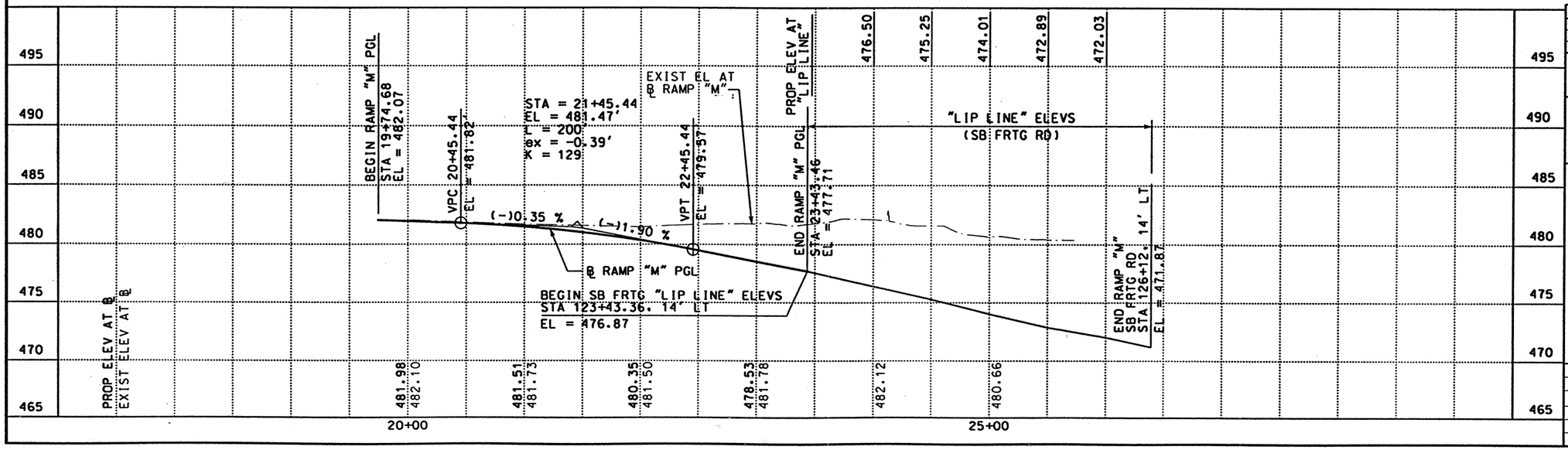

DATE	BY	REV	REVISION

© 1999 Texas Department of Transportation

Brown & Root
HOUSTON, TEXAS

IH 35

RAMP "M"
PLAN AND PROFILE

0 50 100
SCALE: 1"=100' HORIZ
1"=10' VERT

SHEET 1 OF 1

FED RD DIV NO	STATE PROJECT NO	SHEET NO
6	NH-99(462)	318

STATE	STATE DIST NO	COUNTY
TEXAS	22	WEBB

CONT	SECT	JOB	HIGHWAY NO
0018	06	131	IH 35

D03RAX08.DGN-06 04-02-99 BAR_HO_ES05 \HCIVIL\CF0039\PHASE2

REF FILE(S): J01LOX01.PRO, PRO LV ON = 1-63
J01LOX01.UTI, UTI LV ON = 1-63
J01LOX01.ILL, ILL LV ON = 20
J01LOX01.FND, FND LV ON = 35
J01LOX01.DRN, DRN LV ON = 8

REF FILE(S): J01LOX01.BCK, BCK LV ON = 1-30
J01LOX01.EOP, EOP LV ON = 1-11,13-17,19-27,29-41,43-53,5
J01LOX01.EOP, ALG LV ON = 1-44
J01LOX01.BDR, BDR LV ON = 5,10,35,45,46,57,60-62

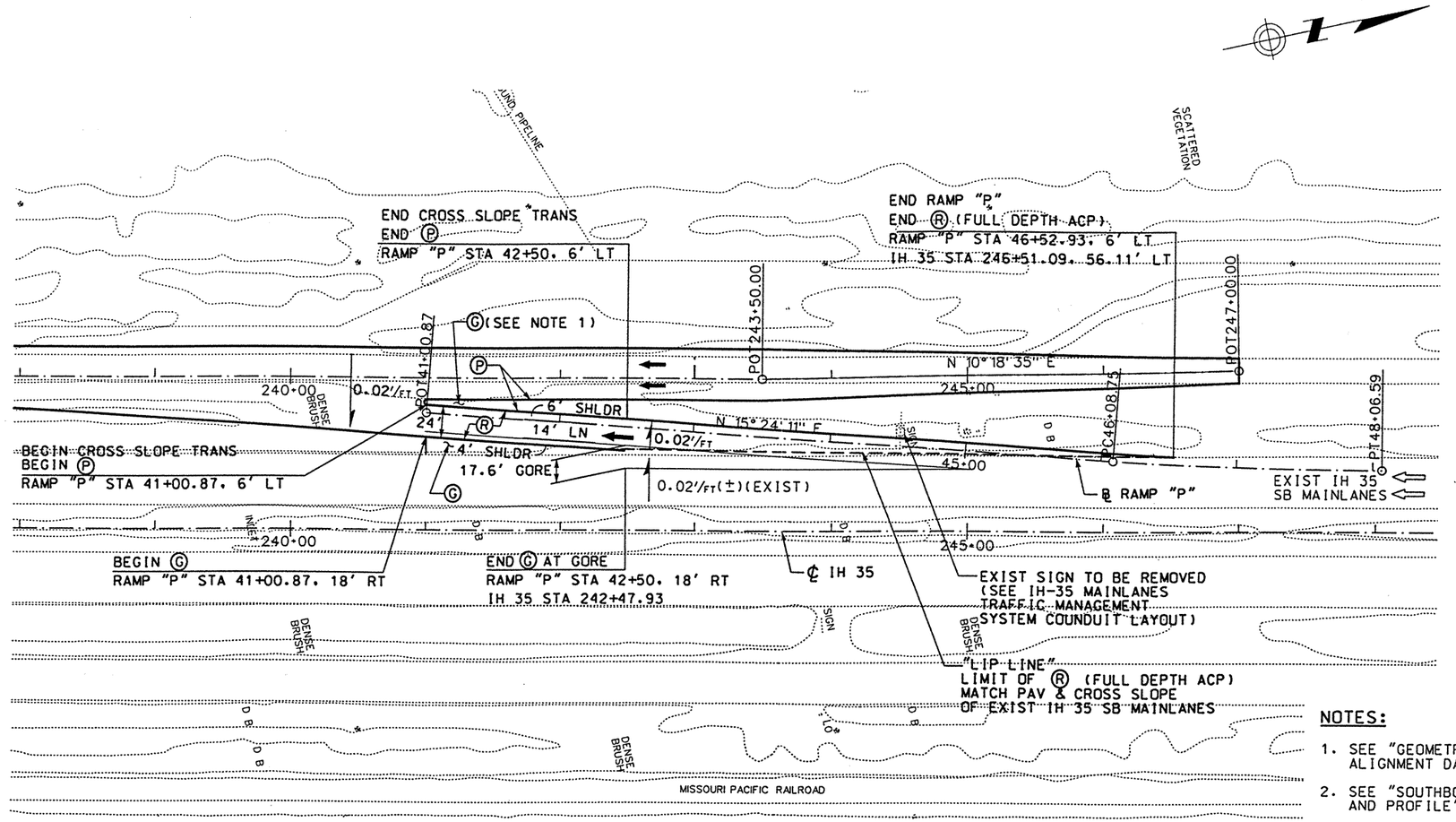

LEGEND:

- Ⓐ CONC PAV (CONT REINF HY STL)(12")
- Ⓑ ASPH CONC PAV (TY A)(4")
- Ⓒ LIME TREATED SUBGRADE (8")
- Ⓓ SINGLE SLOPE CONCRETE BARRIER (SSCB) (TYPE 2)
- Ⓔ TYPE II MONO CURB (6")
- Ⓕ CELL FIBER MULCH SEED (PERM) (RURAL)(CLAY)
- Ⓖ CLASS B RIPRAP (4")
- Ⓗ CONC SIDEWALK (4")
- Ⓘ CONC MEDIAN (6")
- Ⓙ SINGLE SLOPE TRAFFIC RAIL(SSTR) w/ DRAIN SLOTS
- Ⓚ RETAINING WALL
- Ⓛ METAL BEAM GUARD FENCE
- Ⓜ BRICK PAVERS
- Ⓝ REMOVE ASPH CONC PAV
- Ⓞ REMOVE CONC PAV
- Ⓟ TYPE II CURB AND GUTTER (6")
- Ⓠ CONCRETE DRIVEWAYS (6")
- Ⓡ ASPH CONC PAV (TY D)(2")
- Ⓢ ASPH CONC PAV (TY A)(8")
- Ⓣ PLANE ASPH CONC PAV (0 - 1")
- Ⓤ SINGLE SLOPE TRAFFIC RAIL (SSTR)
- Ⓥ CHAINLINK FENCE (6')
- Ⓦ ROADWAY UNDERDRAIN
- Ⓧ WHEELCHAIR RAMP TYPE B

NOTES:

1. SEE "GEOMETRIC DATA SUMMARY" FOR ALIGNMENT DATA.
2. SEE "SOUTHBOUND FRONTAGE ROAD PLAN AND PROFILE" FOR MORE DETAILS.

STATE OF TEXAS
DERRON S. VINCIK
84028
REGISTERED PROFESSIONAL ENGINEER

The seal appearing on this document was authorized by Derron S. Vincik P.E. 84028, on June 3, 1999.

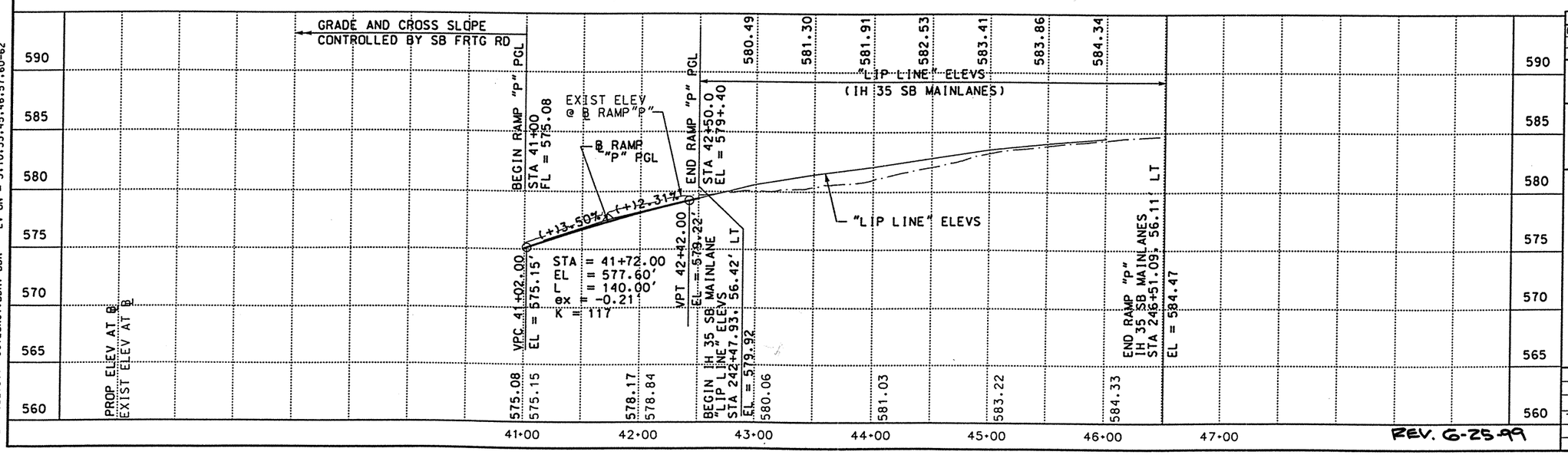

REV. 6-25-99

DATE	BY	REV	REVISION
06/03/99	DV	1	NOTE

© 1999 Texas Department of Transportation

Brown & Root
HOUSTON, TEXAS

IH 35

RAMP "P"
PLAN AND PROFILE

0 50 100
SCALE: 1"=100' HORZ
1"=10' VERT

SHEET 1 OF 1

FED RD DIV NO	STATE PROJECT NO	SHEET NO
6	NH-99(462)	329

STATE	STATE DIST NO	COUNTY
TEXAS	22	WEBB

CONT	SECT	JOB	HIGHWAY NO
0018	06	131	IH 35

REF FILE(S): J01LOX01.PRO, PRO LV ON = 1-63
J01LOX01.UTI, UTI LV ON = 1-63
J01LOX01.ILL, ILL LV ON = 20
J01LOX01.FND, FND LV ON = 35
J01LOX01.DRN, DRN LV ON = 8

REF FILE(S): J01LOX01.BCK, BCK LV ON = 1-30
J01LOX01.EOP, EOP LV ON = 1-11,13-17,19-27,29-41,43-53,5
J01LOX01.EOP, ALG LV ON = 1-44
J01LOX01.BDR, BDR LV ON = 5,10,35,45,46,57,60-62

D03RAX10.DGN-06 06-03-99 BAR_HO_ES05 \HCIVIL\CF0039\PHASE2

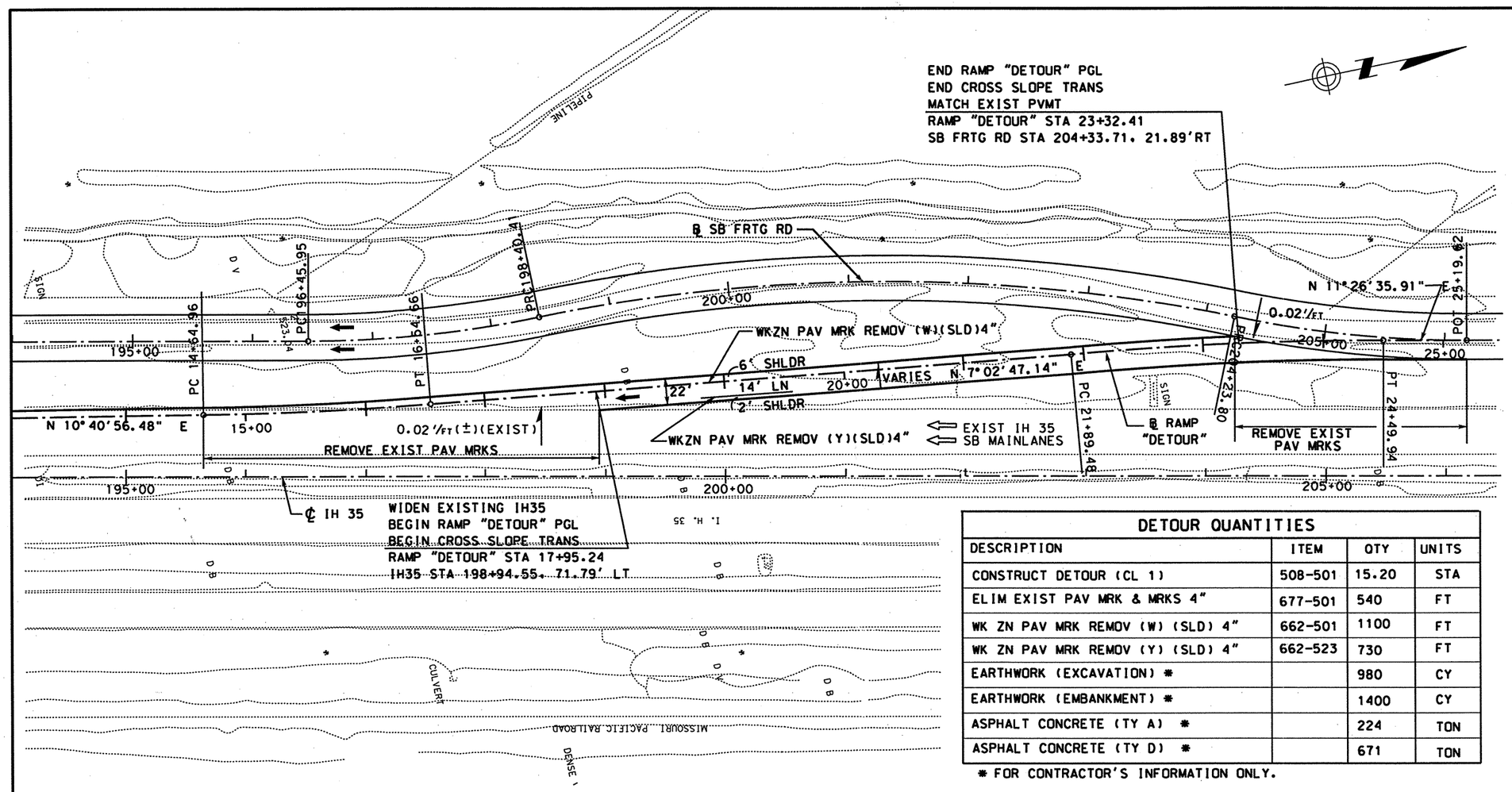

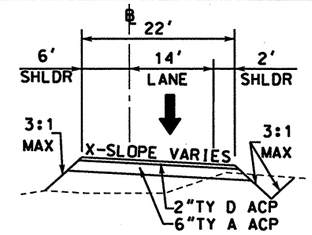

TYPICAL DETOUR SECTION

NTS

HORIZONTAL CURVE DATA

PI STATION	= 10+00.00
	N 17,117,334.963
	E 663,573.606
PI STATION	= 15+59.84
	N 17,117,885.1053
	E 663,677.3810
DELTA	= 3° 47' 38.96" (LT)
DEGREE OF CURVE	= 2° 00' 00.00"
TANGENT	= 94.89
LENGTH	= 189.71
RADIUS	= 2,864.79
PC STATION	= 14+64.96
PT STATION	= 16+54.66
PI STATION	= 23+19.80
	N 17,118,639.635
	E 663,768.530
DELTA	= 5° 12' 33.07" (RT)
DEGREE OF CURVE	= 2° 00' 00.00"
TANGENT	= 130.32
LENGTH	= 260.46
RADIUS	= 2,864.79
PC STATION	= 21+89.48
PT STATION	= 24+49.94
PI STATION	= 25+19.62
	N 17,118,835.6573
	E 663,808.2187

DETOUR QUANTITIES

DESCRIPTION	ITEM	QTY	UNITS
CONSTRUCT DETOUR (CL 1)	508-501	15.20	STA
ELIM EXIST PAV MRK & MRKS 4"	677-501	540	FT
WK ZN PAV MRK REMOV (W) (SLD) 4"	662-501	1100	FT
WK ZN PAV MRK REMOV (Y) (SLD) 4"	662-523	730	FT
EARTHWORK (EXCAVATION) *		980	CY
EARTHWORK (EMBANKMENT) *		1400	CY
ASPHALT CONCRETE (TY A) *		224	TON
ASPHALT CONCRETE (TY D) *		671	TON

* FOR CONTRACTOR'S INFORMATION ONLY.

STATE OF TEXAS
A. A. ABUGATTAS
34940
REGISTERED
PROFESSIONAL ENGINEER

The seal appearing on this document was authorized by A. A. ABUGATTAS P.E. 34940, on November 14, 2000.

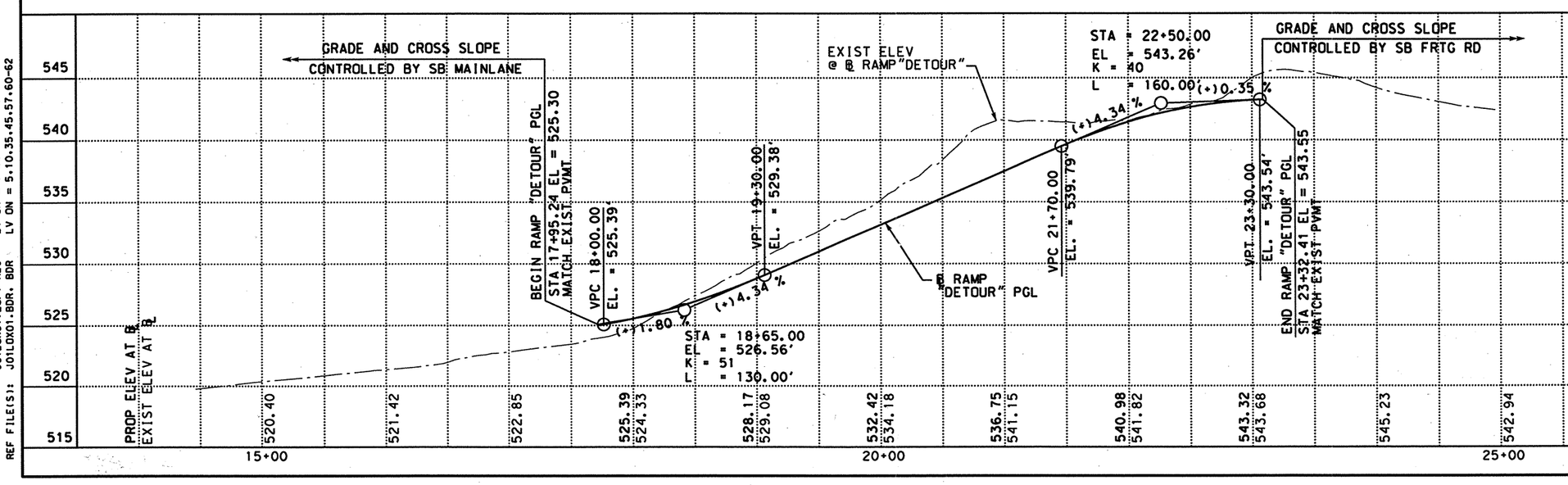

DATE	BY	REV	REVISION

© 1999 Texas Department of Transportation

Brown & Root
HOUSTON, TEXAS

IH 35

RAMP "DETOUR"
PLAN AND PROFILE

0 50 100
SCALE: 1"=100' HORZ
1"=10' VERT

SHEET 1 OF 1

FED RD DIV NO	STATE PROJECT NO	SHEET NO
6	NH-99(462)	329A

STATE	STATE DIST NO	COUNTY
TEXAS	22	WEBB

CONT	SECT	JOB	HIGHWAY NO
0018	06	131	IH 35

REF FILE(S): J01LOX01.UTI, UTI LV ON = 1-63
J01LOX01.detour.alg, alg LV ON = 1-63
J01LOX01.DRN, DRN LV ON = 8

REF FILE(S): J01LOX01.BCK, BCK LV ON = 1-30
J01LOX01.EOP, EOP LV ON = 1-11,13-17,19-27,29-41,43-53,5
J01LOX01.EOP, ALG LV ON = 1-44
J01LOX01.BDR, BDR LV ON = 5,10,35,45,57,60-62

D03detour.DGN-01 11-07-00 BAR=HO=E505 \HCIVIL\CF0039\PHASE2

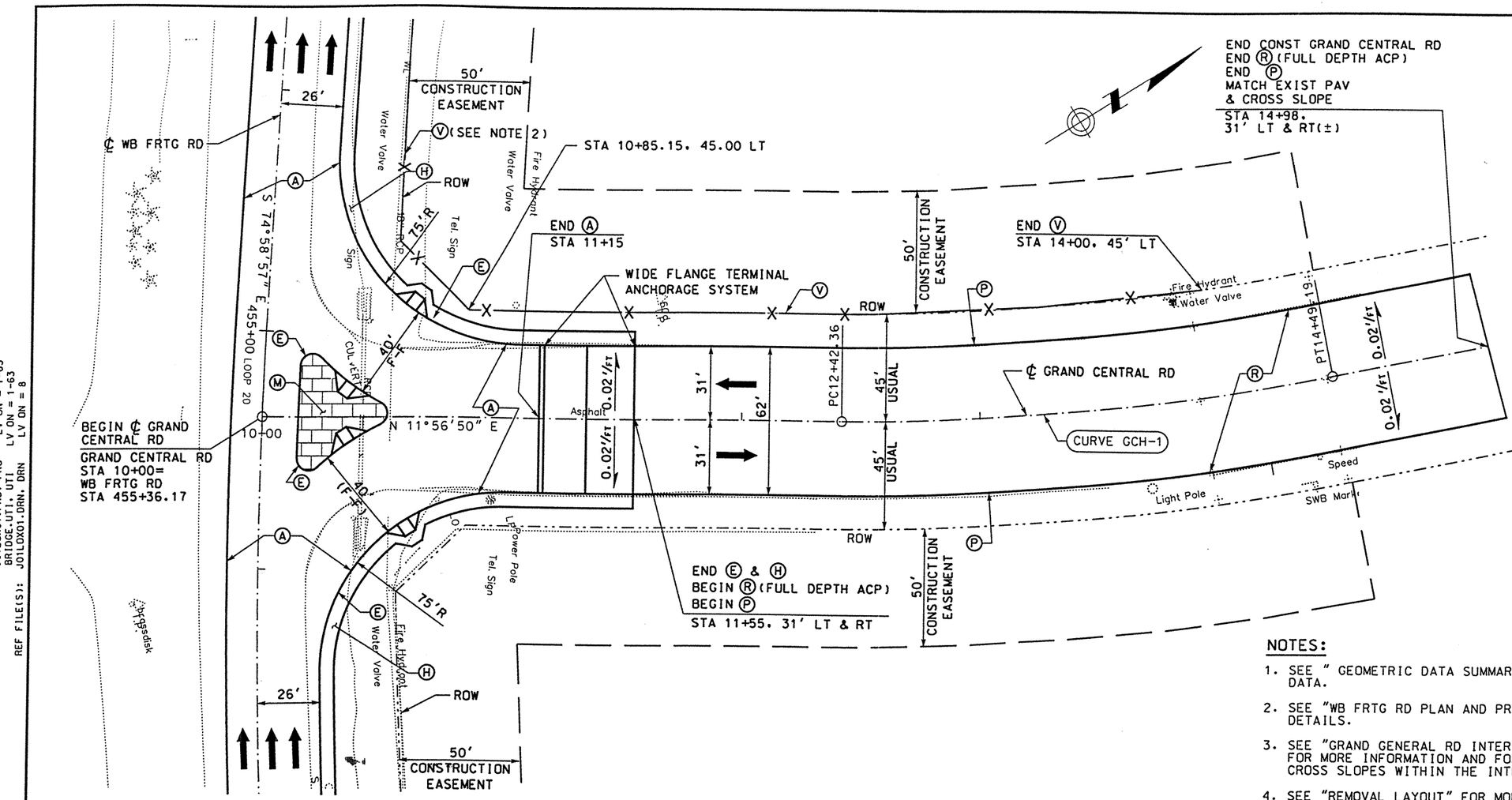

LEGEND:

- (A) CONC PAV (CONT REINF HY STL)(12")
- (B) ASPH CONC PAV (TY A)(4")
- (C) LIME TREATED SUBGRADE (8")
- (D) SINGLE SLOPE CONCRETE BARRIER (SSCB) (TYPE 2)
- (E) TYPE II MONO CURB (6")
- (F) CELL FIBER MULCH SEED (PERM) (RURAL)(CLAY)
- (G) CLASS B RIPRAP (4")
- (H) CONC SIDEWALK (4")
- (I) CONC MEDIAN (6")
- (J) SINGLE SLOPE TRAFFIC RAIL(SSTR) w/ DRAIN SLOTS
- (K) RETAINING WALL
- (L) METAL BEAM GUARD FENCE
- (M) BRICK PAVERS
- (N) REMOVE ASPH CONC PAV
- (O) REMOVE CONC PAV
- (P) TYPE II CURB AND GUTTER (6")
- (Q) CONCRETE DRIVEWAYS (6")
- (R) ASPH CONC PAV (TY D)(2")
- (S) ASPH CONC PAV (TY A)(8")
- (T) PLANE ASPH CONC PAV (0 - 1")
- (U) SINGLE SLOPE TRAFFIC RAIL (SSTR)
- (V) CHAINLINK FENCE (6')
- (W) ROADWAY UNDERDRAIN
- (X) WHEELCHAIR RAMP TYPE B

NOTES:

1. SEE " GEOMETRIC DATA SUMMARY" FOR ALIGNMENT DATA.
2. SEE "WB FRTG RD PLAN AND PROFILE" FOR MORE DETAILS.
3. SEE "GRAND GENERAL RD INTERSECTION LAYOUT" FOR MORE INFORMATION AND FOR ELEVATIONS AND CROSS SLOPES WITHIN THE INTERSECTION.
4. SEE "REMOVAL LAYOUT" FOR MORE DETAILS.

STATE OF TEXAS
DERRON S. VINCIK
84028
REGISTERED PROFESSIONAL ENGINEER

The seal appearing on this document was authorized by Derron S. Vincik P.E. 84028, on June 3, 1999.

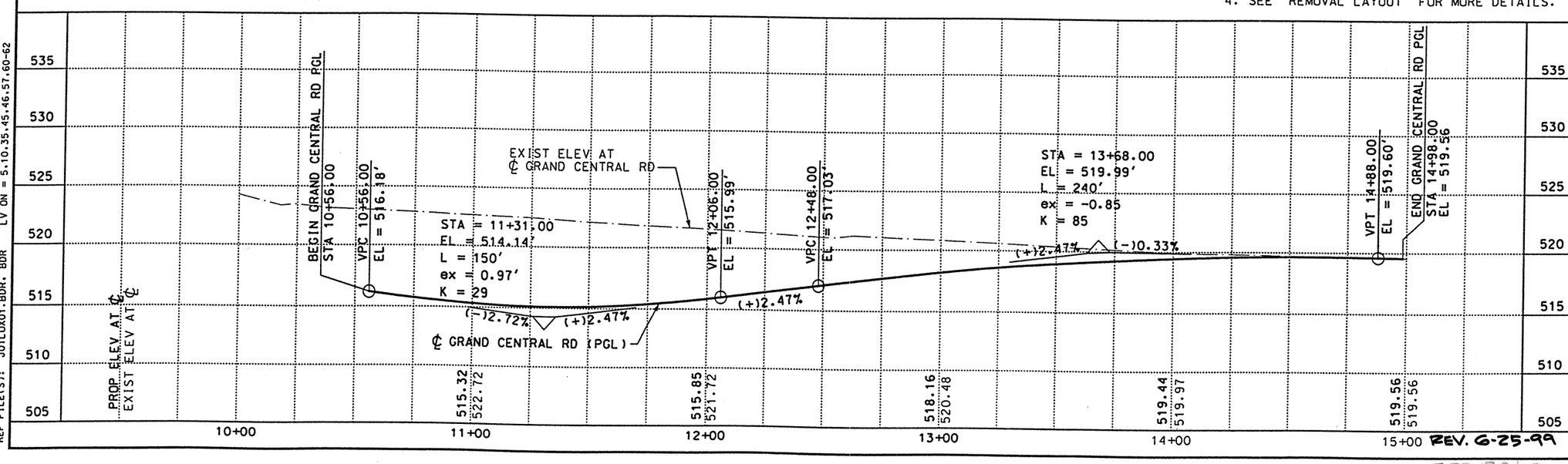

REV. 6-25-99

DATE	BY	REV	REVISION
6/3/99	DV	01	CONSTRUCTION EASEMENT

© 1999 Texas Department of Transportation

Brown & Root
HOUSTON, TEXAS

LOOP 20
GRAND CENTRAL RD

PLAN AND PROFILE
STA 10+00.00 TO
STA 15+00.00

0 25 50
SCALE: 1"=50' HORIZ
1"=10' VERT

SHEET 1 OF 1

FED RD DIV NO	STATE PROJECT NO	SHEET NO
6	C86-14-23	330

STATE	STATE DIST NO	COUNTY
TEXAS	22	WEBB

CONT	SECT	JOB	HIGHWAY NO
0086	14	023	LOOP 20

SEE REVISION

REF FILE(S): J03ASX01.SUR, SUR LV ON = ∞0
J01LOX01.ROW, ROW LV ON = 1-20,22-61,63
J01LOX01.PRO, PRO LV ON = 1-63
BRIDGE.UTI, UTI LV ON = 1-63
J01LOX01.DRN, DRN LV ON = 8

REF FILE(S): BRIDGE01.BCK, BCK LV ON = 1-30
J01LOX01.EOP, EOP LV ON = 1-11,13-17,19-27,29-41,43-53,5
J01LOX01.ALG, ALG LV ON = 1-44
J01LOX01.BDR, BDR LV ON = 5,10,35,45,46,57,60-62

D03CCX01.DGN-06 05-29-99 BAR_HO_ES05 \HCIVIL\CF0039\PHASE2

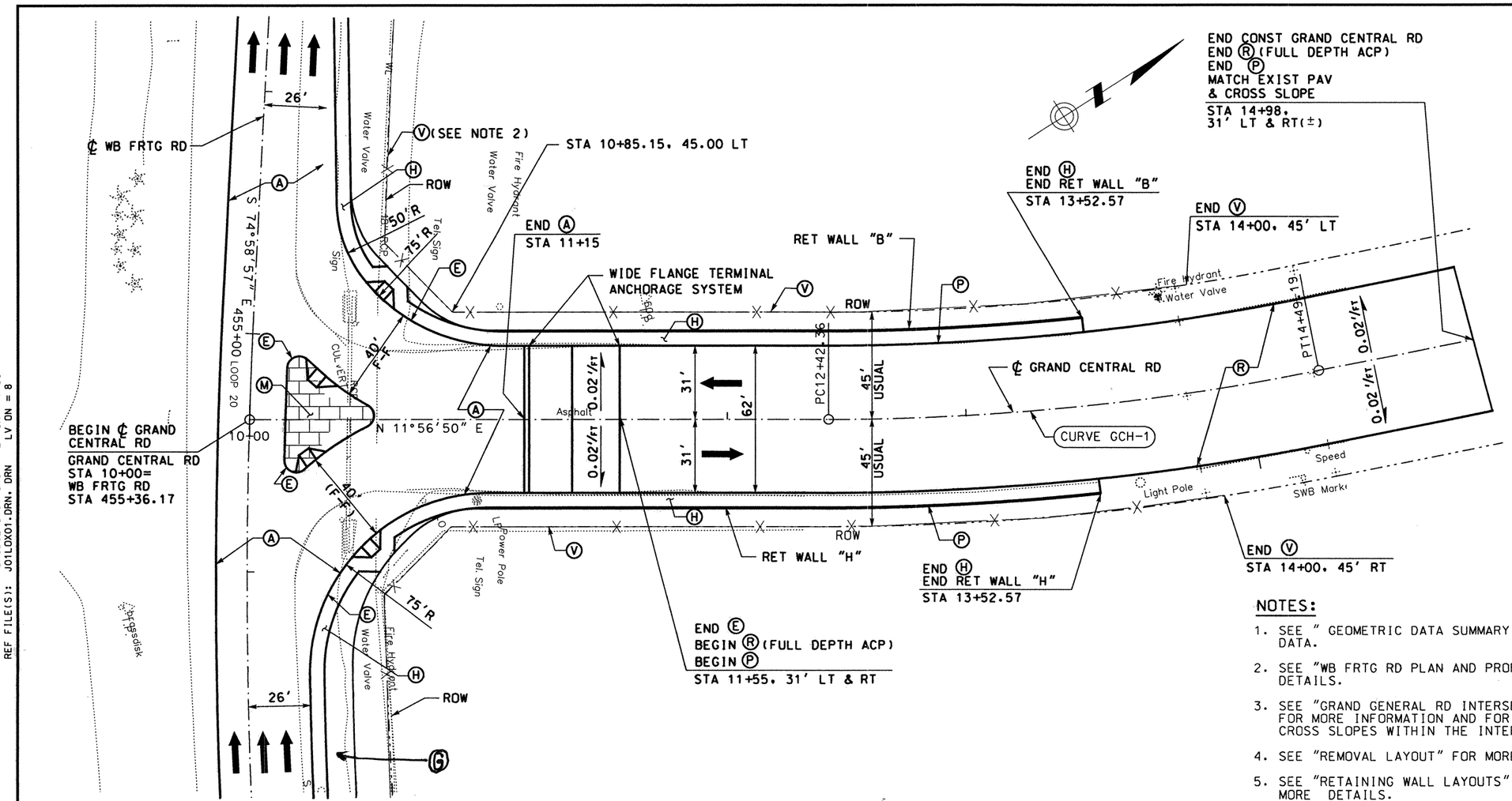

LEGEND:

- Ⓐ CONC PAV (CONT REINF HY STL)(12")
- Ⓑ ASPH CONC PAV (TY A)(4")
- Ⓒ LIME TREATED SUBGRADE (8")
- Ⓓ SINGLE SLOPE CONCRETE BARRIER (SSCB) (TYPE 2)
- Ⓔ TYPE II MONO CURB (6")
- Ⓕ CELL FIBER MULCH SEED (PERM) (RURAL)(CLAY)
- Ⓖ CLASS B RIPRAP (4")
- Ⓗ CONC SIDEWALK (4")
- Ⓘ CONC MEDIAN (6")
- Ⓙ SINGLE SLOPE TRAFFIC RAIL(SSTR) w/ DRAIN SLOTS
- Ⓚ RETAINING WALL
- Ⓛ METAL BEAM GUARD FENCE
- Ⓜ BRICK PAVERS
- Ⓝ REMOVE ASPH CONC PAV
- Ⓞ REMOVE CONC PAV
- Ⓟ TYPE II CURB AND GUTTER (6")
- Ⓠ CONCRETE DRIVEWAYS (6")
- Ⓡ ASPH CONC PAV (TY D)(2")
- Ⓢ ASPH CONC PAV (TY A)(8")
- Ⓣ PLANE ASPH CONC PAV (0 - 1")
- Ⓤ SINGLE SLOPE TRAFFIC RAIL (SSTR)
- Ⓥ CHAINLINK FENCE (6')
- Ⓦ ROADWAY UNDERDRAIN
- Ⓧ WHEELCHAIR RAMP TYPE B

NOTES:

1. SEE " GEOMETRIC DATA SUMMARY" FOR ALIGNMENT DATA.
2. SEE "WB FRTG RD PLAN AND PROFILE" FOR MORE DETAILS.
3. SEE "GRAND GENERAL RD INTERSECTION LAYOUT" FOR MORE INFORMATION AND FOR ELEVATIONS AND CROSS SLOPES WITHIN THE INTERSECTION.
4. SEE "REMOVAL LAYOUT" FOR MORE DETAILS.
5. SEE "RETAINING WALL LAYOUTS" "B" & "H" FOR MORE DETAILS.

STATE OF TEXAS
DERRON S. VINCIK
84028
REGISTERED PROFESSIONAL ENGINEER

The seal appearing on this document was authorized by Derron S. Vincik P.E. 84028, on September 30, 1999.

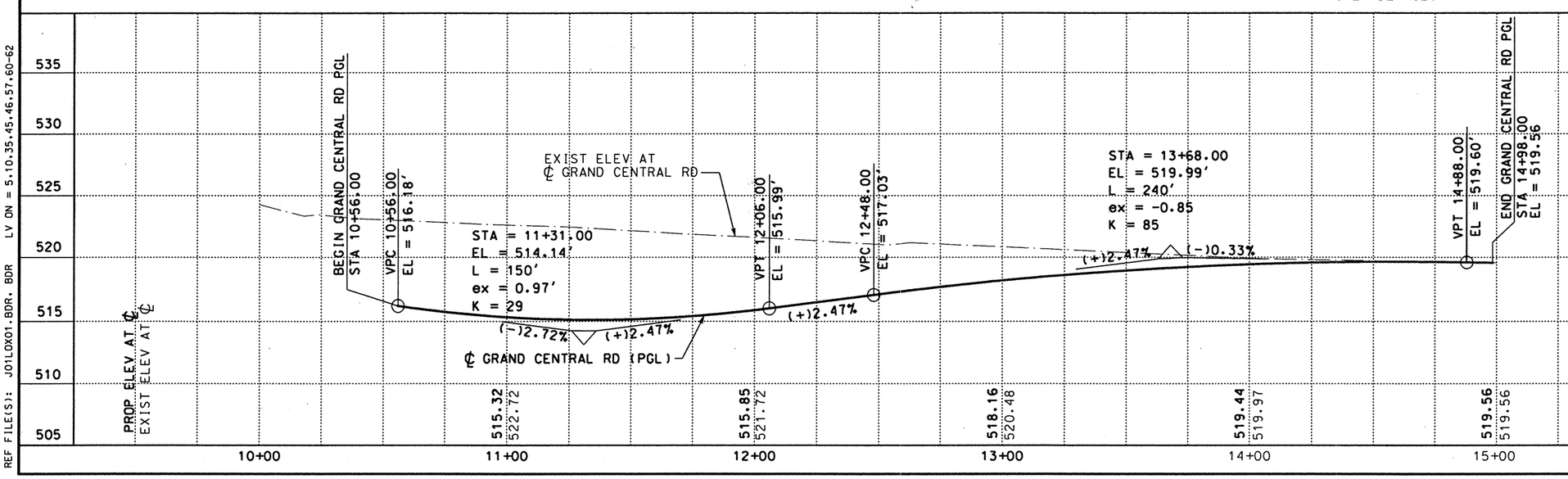

DATE	BY	REV	REVISION
6/3/99	DV	01	CONSTRUCTION EASEMENT
9/29/99	DV	02	RETAINING WALL "B" & "H"

© 1999 Texas Department of Transportation

Brown & Root
HOUSTON, TEXAS

LOOP 20
GRAND CENTRAL RD

PLAN AND PROFILE
STA 10+00.00 TO
STA 15+00.00

0 25 50
SCALE: 1"=50' HORIZ
1"=10' VERT

SHEET 1 OF 1

FED RD DIV NO	STATE PROJECT NO	SHEET NO
6	C86-14-23	330

STATE	STATE DIST NO	COUNTY
TEXAS	22	WEBB

CONT	SECT	JOB	HIGHWAY NO
0086	14	023	LOOP 20

REF FILE(S): J03ASX01.SUR, SUR LV ON = 2-60
J01LOX01.ROW, ROW LV ON = 1-20,22-61,63
J01LOX01.PRO, PRO LV ON = 1-63
BRIDGE.UTI, UTI LV ON = 1-63
J01LOX01.DRN, DRN LV ON = 8

REF FILE(S): BRIDGE01.BCK, BCK LV ON = 1-30
J01LOX01.EOP, EOP LV ON = 1-11,13-17,19-27,29-41,43-53,5
J01LOX01.ALG, ALG LV ON = 1-44
J01LOX01.BDR, BDR LV ON = 5,10,35,45,46,57,60-62

D03GCX01.DGN-07 09-29-99 BAR_HO_ES05 \HCIVIL\CF0039\PHASE2

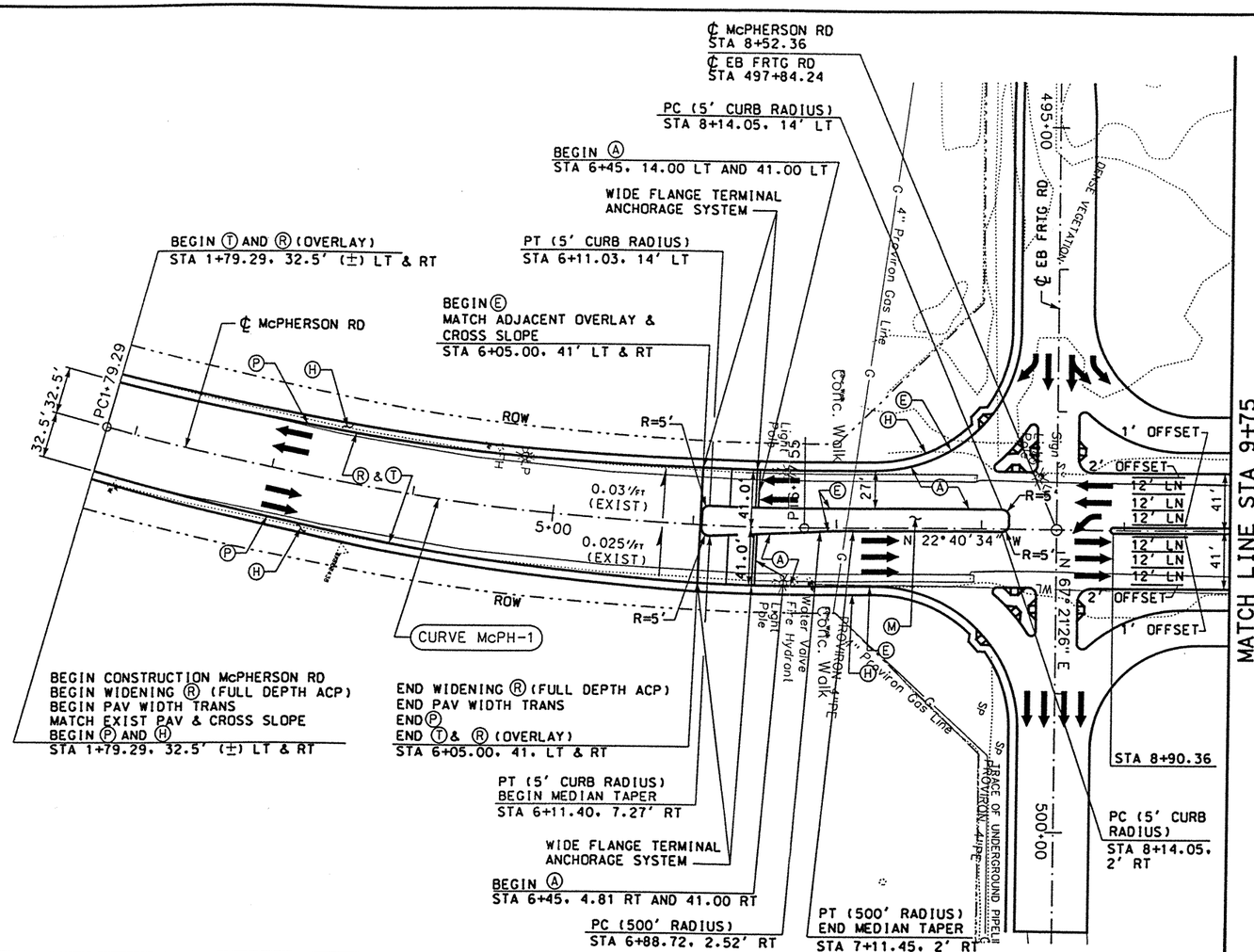

LEGEND:

- Ⓐ CONC PAV (CONT REINF HY STL)(12")
- Ⓑ ASPH CONC PAV (TY A)(4")
- Ⓒ LIME TREATED SUBGRADE (8")
- Ⓓ SINGLE SLOPE CONCRETE BARRIER (SSCB) (TYPE 2)
- Ⓔ TYPE II MONO CURB (6")
- Ⓕ CELL FIBER MULCH SEED (PERM) (RURAL)(CLAY)
- Ⓖ CLASS B RIPRAP (4")
- Ⓗ CONC SIDEWALK (4")
- Ⓘ CONC MEDIAN (6")
- Ⓙ SINGLE SLOPE TRAFFIC RAIL(SSTR) w/ DRAIN SLOTS
- Ⓚ RETAINING WALL
- Ⓛ METAL BEAM GUARD FENCE
- Ⓜ BRICK PAVERS
- Ⓝ REMOVE ASPH CONC PAV
- Ⓞ REMOVE CONC PAV
- Ⓟ TYPE II CURB AND GUTTER (6")
- Ⓠ CONCRETE DRIVEWAYS (6")
- Ⓡ ASPH CONC PAV (TY D)(2")
- Ⓢ ASPH CONC PAV (TY A)(8")
- Ⓣ PLANE ASPH CONC PAV (0 - 1")
- Ⓤ SINGLE SLOPE TRAFFIC RAIL (SSTR)
- Ⓥ CHAINLINK FENCE (6')
- Ⓦ ROADWAY UNDERDRAIN
- Ⓧ WHEELCHAIR RAMP TYPE B

NOTES:

1. SEE "GEOMETRIC DATA SUMMARY" FOR ALIGNMENT DATA.
2. SEE "EASTBOUND AND WESTBOUND FRONTAGE ROAD PLAN AND PROFILE" FOR MORE DETAILS.
3. SEE "McPHERSON ROAD INTERSECTION LAYOUTS" FOR MORE DETAILS.
4. SEE "McPHERSON ROAD CONTOUR LAYOUT" FOR CROSS SLOPE AND ELEVATIONS WITHIN THE INTERSECTION.
5. SEE "SIGNING AND PAVEMENT MARKING LAYOUT" FOR MORE DETAILS.
6. SEE "REMOVAL LAYOUT" FOR MORE DETAILS.
7. PLANE EXIST ACP (0-1") AND THEN APPLY 2" ACP OVERLAY (TY D).

STATE OF TEXAS
DERRON S. VINCIK
84028
REGISTERED PROFESSIONAL ENGINEER

The seal appearing on this document was authorized by Derron S. Vincik P.E. 84028, on June 3, 1999.

Derron S. Vincik

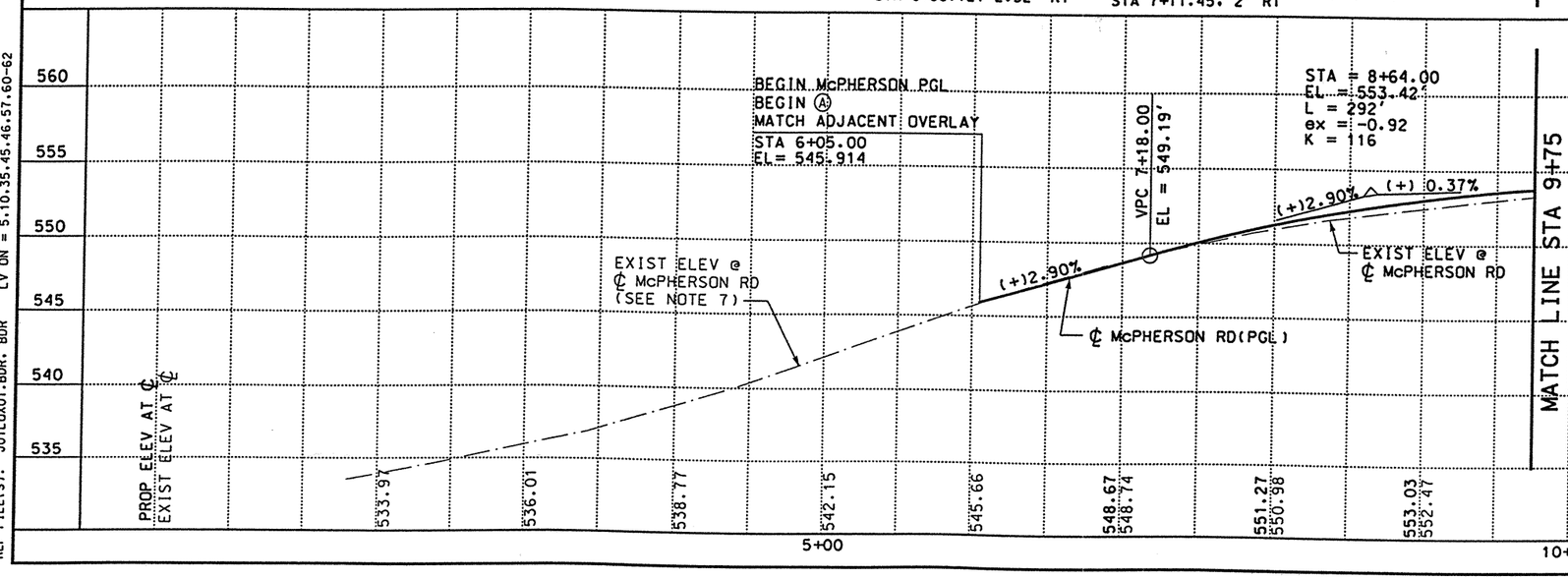

REV. 6-25-99

DATE	BY	REV	REVISION
6/3/99	DV	01	WIDE FLANGE TERMINAL ANCHORAGE SYSTEM

© 1999 Texas Department of Transportation

Brown & Root
HOUSTON, TEXAS

LOOP 20
McPHERSON ROAD

PLAN AND PROFILE
STA 1+79.29 TO STA 9+75

0 50 100
SCALE: 1"=100' HORIZ
1"=10' VERT

SHEET 1 OF 2

FED RD DIV NO	STATE PROJECT NO	SHEET NO
6	C86-14-23	331

STATE	STATE DIST NO	COUNTY
TEXAS	22	WEBB

CONT	SECT	JOB	HIGHWAY NO
0086	14	023	LOOP 20

REF FILE(S): J01LOX01.PRO, PRO LV ON = 1-63
J01LOX01.UTI, UTI LV ON = 1-63
J01LOX01.ILL, ILL LV ON = 20
J01LOX01.FND, FND LV ON = 35
J01LOX01.DRN, DRN LV ON = 8

REF FILE(S): J01LOX01.BCK, BCK LV ON = 1-30
J01LOX01.EOP, EOP LV ON = 1-11,13-17,19-27,29-41,43-53,5
J01LOX01.EOP, ALG LV ON = 1-44
J01LOX01.BDR, BDR LV ON = 5,10,35,45,46,57,60-62

D03MRX01.DGN-07 06-02-99 BAR_HO_ES05 \HCIVIL\CF0039\PHASE2

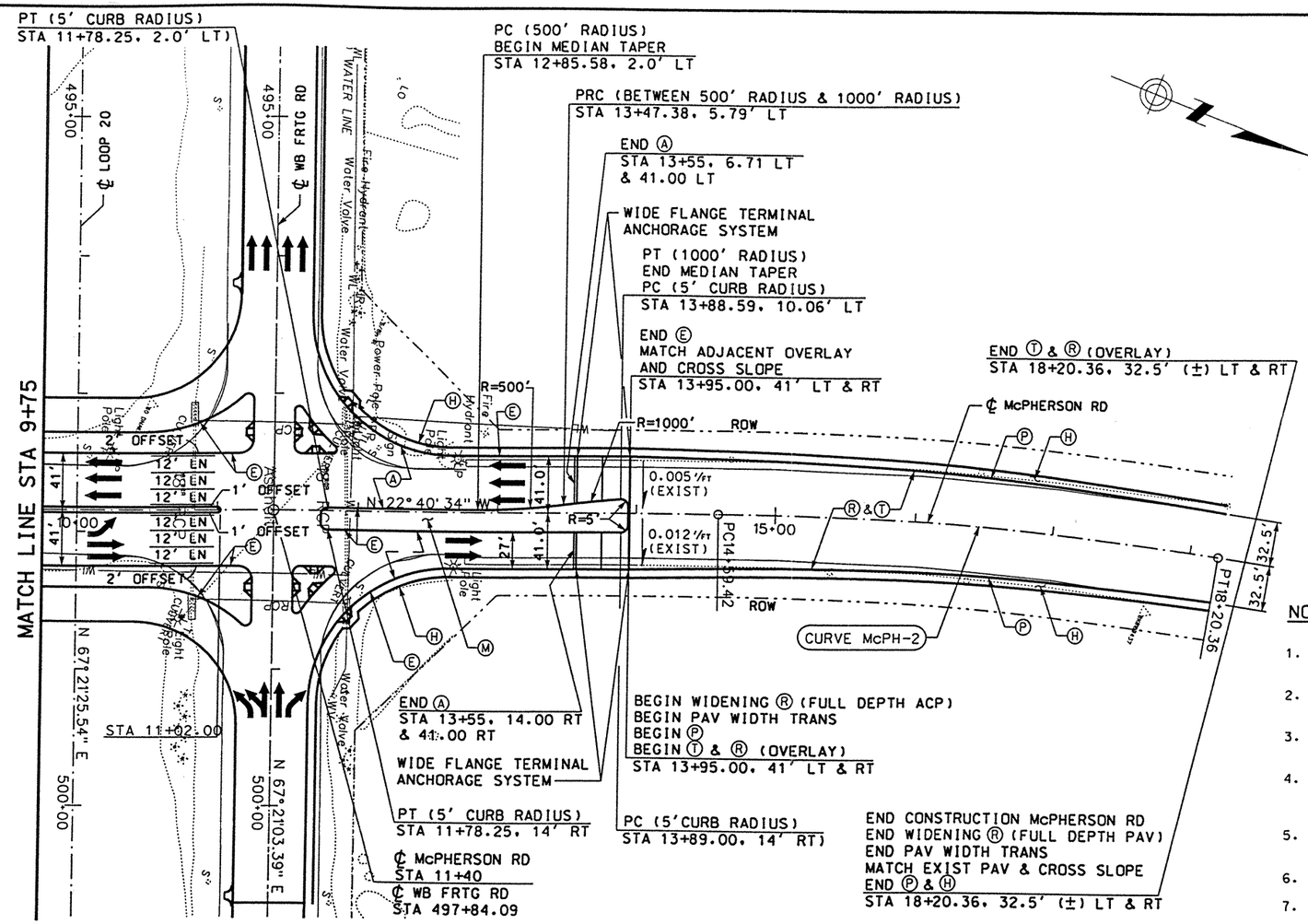

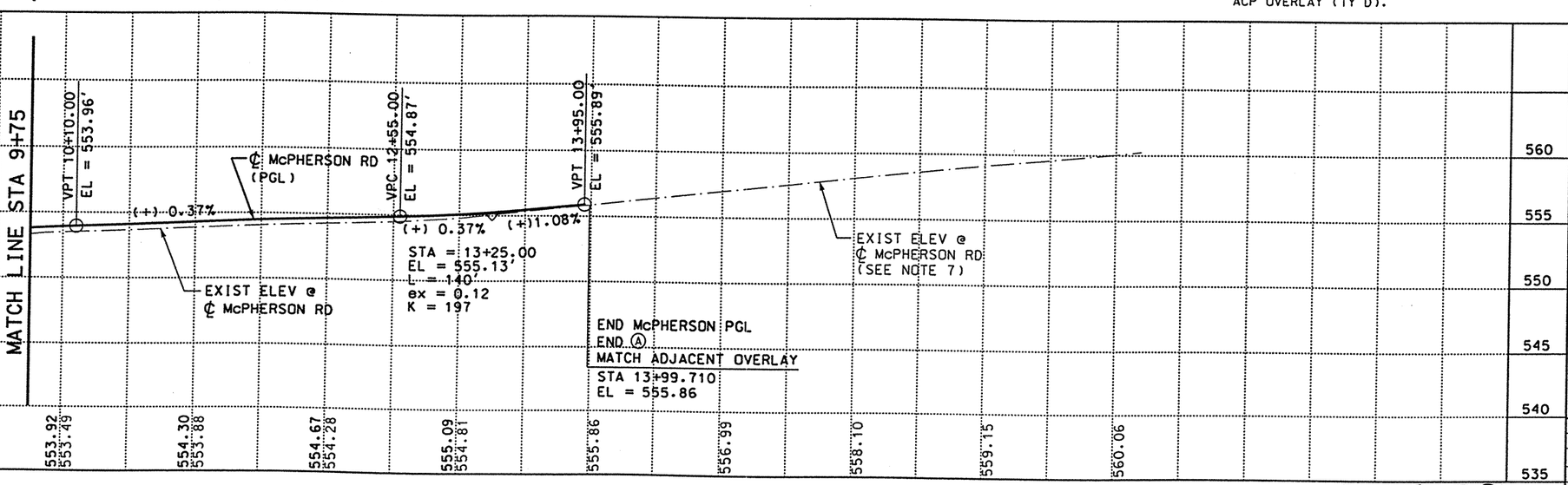

REV. 6-25-99

LEGEND:

- Ⓐ CONC PAV (CONT REINF HY STL)(12")
- Ⓑ ASPH CONC PAV (TY A)(4")
- Ⓒ LIME TREATED SUBGRADE (8")
- Ⓓ SINGLE SLOPE CONCRETE BARRIER (SSCB) (TYPE 2)
- Ⓔ TYPE II MONO CURB (6")
- Ⓕ CELL FIBER MULCH SEED (PERM) (RURAL)(CLAY)
- Ⓖ CLASS B RIPRAP (4")
- Ⓗ CONC SIDEWALK (4")
- Ⓘ CONC MEDIAN (6")
- Ⓙ SINGLE SLOPE TRAFFIC RAIL(SSTR) w/ DRAIN SLOTS
- Ⓚ RETAINING WALL
- Ⓛ METAL BEAM GUARD FENCE
- Ⓜ BRICK PAVERS
- Ⓝ REMOVE ASPH CONC PAV
- Ⓞ REMOVE CONC PAV
- Ⓟ TYPE II CURB AND GUTTER (6")
- Ⓠ CONCRETE DRIVEWAYS (6")
- Ⓡ ASPH CONC PAV (TY D)(2")
- Ⓢ ASPH CONC PAV (TY A)(8")
- Ⓣ PLANE ASPH CONC PAV (0 - 1")
- Ⓤ SINGLE SLOPE TRAFFIC RAIL (SSTR)
- Ⓥ CHAINLINK FENCE (6')
- Ⓦ ROADWAY UNDERDRAIN
- Ⓧ WHEELCHAIR RAMP TYPE B

NOTES:

1. SEE "GEOMETRIC DATA SUMMARY" FOR ALIGNMENT DATA.
2. SEE "EASTBOUND AND WESTBOUND FRONTAGE ROAD PLAN AND PROFILE" FOR MORE DETAILS.
3. SEE "McPHERSON ROAD INTERSECTION LAYOUT" FOR MORE DETAILS.
4. SEE "McPHERSON ROAD CONTOUR LAYOUT" FOR CROSS SLOPE AND ELEVATIONS WITHIN THE INTERSECTION.
5. SEE "SIGNING AND PAVEMENT MARKING LAYOUT" FOR MORE DETAILS.
6. SEE "REMOVAL LAYOUT" FOR MORE DETAILS.
7. PLANE EXIST ACP (0-1") AND THEN APPLY 2" ACP OVERLAY (TY D).

STATE OF TEXAS
DERRON S. VINCIK
P.E. 84028
REGISTERED PROFESSIONAL ENGINEER

The seal appearing on this document was authorized by Derron S. Vincik P.E. 84028, on June 3, 1999.

DATE	BY	REV	REVISION
6/3/99	DV	01	WIDE FLANGE TERMINAL ANCHORAGE SYSTEM

© 1999 Texas Department of Transportation

Brown & Root
HOUSTON, TEXAS

LOOP 20
McPHERSON ROAD

PLAN AND PROFILE
STA 9+75 TO STA 18+20.36

0 50 100
SCALE: 1"=100' HORIZ
1"=10' VERT

SHEET 2 OF 2

FED RD DIV NO	STATE PROJECT NO	SHEET NO
6	C86-14-23	332

STATE	STATE DIST NO	COUNTY
TEXAS	22	WEBB

CONT	SECT	JOB	HIGHWAY NO
0086	14	023	LOOP 20

REF FILE(S): J01LOX01.PRO, PRO LV ON = 1-63
J01LOX01.UTI, UTI LV ON = 1-63
J01LOX01.ILL, ILL LV ON = 20
J01LOX01.FND, FND LV ON = 35
J01LOX01.DRN, DRN LV ON = 8

REF FILE(S): J01LOX01.BCK, BCK LV ON = 1-30
J01LOX01.EOP, EOP LV ON = 1-11,13-17,19-27,29-41,43-53,5
J01LOX01.EOP, ALG LV ON = 1-44
J01LOX01.BDR, BDR LV ON = 5,10,35,45,46,57,60-62

DO3MRX02.DGN-07 06-02-99 BAR_HO_ES05 \HCIVIL\CF0039\PHASE2

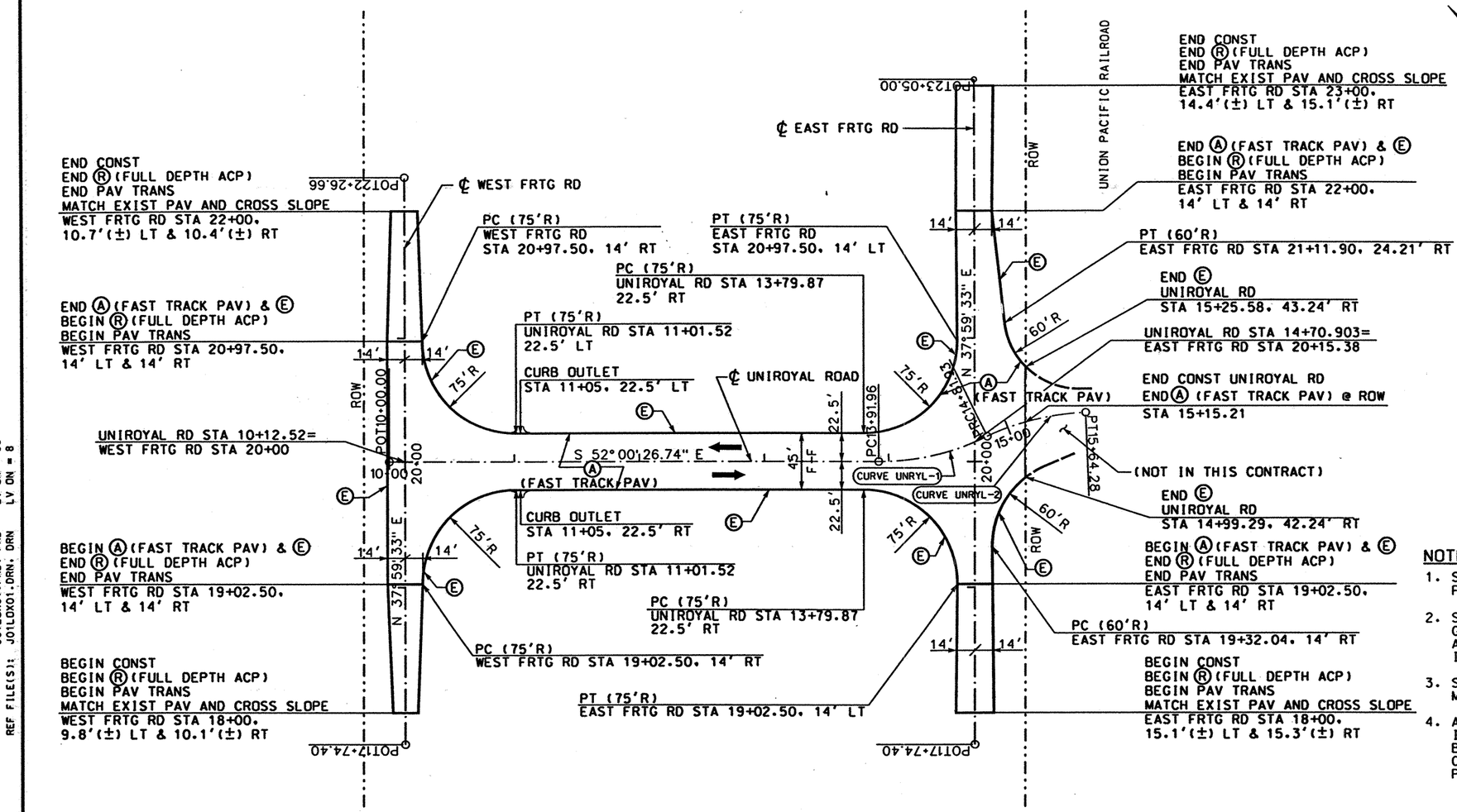

LEGEND:

- Ⓐ CONC PAV (CONT REINF HY STL)(12")
- Ⓑ ASPH CONC PAV (TY A)(4")
- Ⓒ LIME TREATED SUBGRADE (8")
- Ⓓ SINGLE SLOPE CONCRETE BARRIER (SSCB) (TYPE 2)
- Ⓔ TYPE II MONO CURB (6")
- Ⓕ CELL FIBER MULCH SEED (PERM) (RURAL)(CLAY)
- Ⓖ CLASS B RIPRAP (4")
- Ⓗ CONC SIDEWALK (4")
- Ⓘ CONC MEDIAN (6")
- Ⓙ SINGLE SLOPE TRAFFIC RAIL(SSTR) w/ DRAIN SLOTS
- Ⓚ RETAINING WALL
- Ⓛ METAL BEAM GUARD FENCE
- Ⓜ BRICK PAVERS
- Ⓝ REMOVE ASPH CONC PAV
- Ⓞ REMOVE CONC PAV
- Ⓟ TYPE II CURB AND GUTTER (6")
- Ⓠ CONCRETE DRIVEWAYS (6")
- Ⓡ ASPH CONC PAV (TY D)(2")
- Ⓢ ASPH CONC PAV (TY A)(8")
- Ⓣ PLANE ASPH CONC PAV (0 - 1")
- Ⓤ SINGLE SLOPE TRAFFIC RAIL (SSTR)
- Ⓥ CHAINLINK FENCE (6')
- Ⓦ ROADWAY UNDERDRAIN
- Ⓧ WHEELCHAIR RAMP TYPE B

NOTES:

1. SEE "GEOMETRIC DATA SUMMARY" FOR ALIGNMENT DATA.
2. SEE "UNIROYAL ROAD INTERSECTION GRADING PLAN" FOR SPOT ELEVATIONS AND CROSS SLOPES WITHIN THE INTERSECTION LAYOUT.
3. SEE "REMOVAL LAYOUT" FOR MORE DETAILS.
4. ALL CONC PAV Ⓐ WITHIN THE INTERSECTION IS SHOWN AND HAS BEEN QUANTIFIED AS FAST TRACK CONTINUALLY REINFORCED CONCRETE PAVEMENT (CRCP-(FS)-92).

STATE OF TEXAS
DERRON S. VINCIK
84028
REGISTERED PROFESSIONAL ENGINEER

The seal appearing on this document was authorized by Derron S. Vincik P.E. 84028, on April 2, 1999.

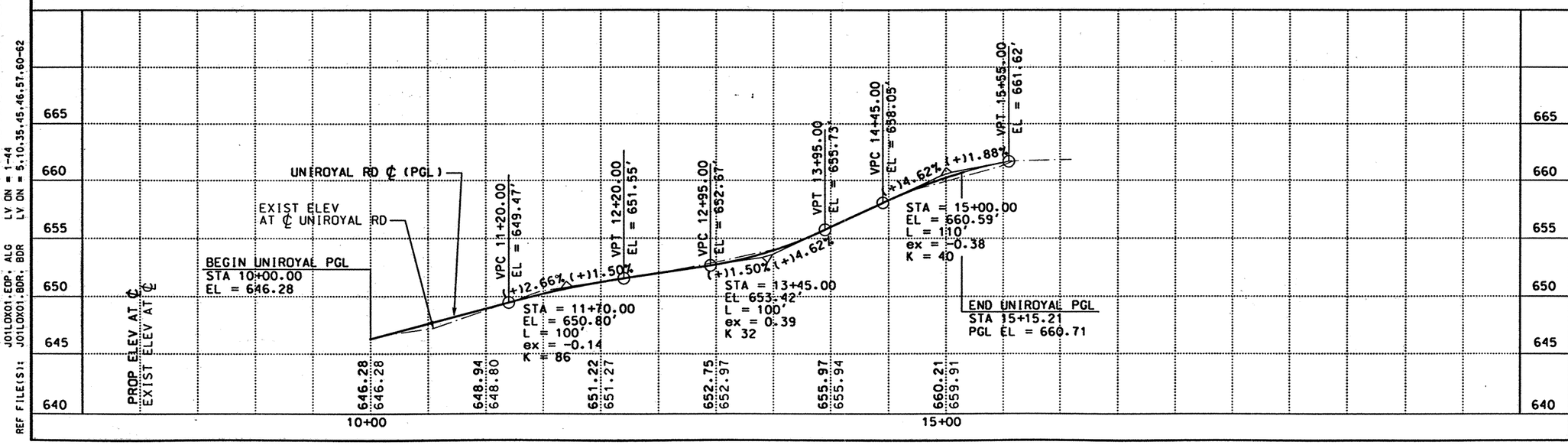

DATE	BY	REV	REVISION

© 1999 Texas Department of Transportation

Brown & Root
HOUSTON, TEXAS

IH 35

UNIROYAL ROAD
PLAN AND PROFILE

0 50 100
SCALE: 1"=100' HORIZ
1"=10' VERT

SHEET 1 OF 1

FED RD DIV NO	STATE PROJECT NO	SHEET NO
6	NH-99(462)	333

STATE	STATE DIST NO	COUNTY
TEXAS	22	WEBB

CONT	SECT	JOB	HIGHWAY NO
0018	05	057	IH 35

REF FILE(S): J01LOX01.PRO, PRO LV ON = 1-63
J01LOX01.UT1, UT1 LV ON = 1-63
J01LOX01.ILL, ILL LV ON = 20
J01LOX01.FND, FND LV ON = 35
J01LOX01.DRN, DRN LV ON = 8

REF FILE(S): J01LOX01.BCK, BCK LV ON = 1-30
J01LOX01.EDP, EDP LV ON = 1-11,13-17,19-27,29-41,43-53,5
J01LOX01.EDP, ALG LV ON = 1-44
J01LOX01.BDR, BDR LV ON = 5,10,35,45,46,57,60-62

D03URX01.DGN-07 04-02-99 BAR_HO_ES05 \HCIVIL\CF0039\PHASE2

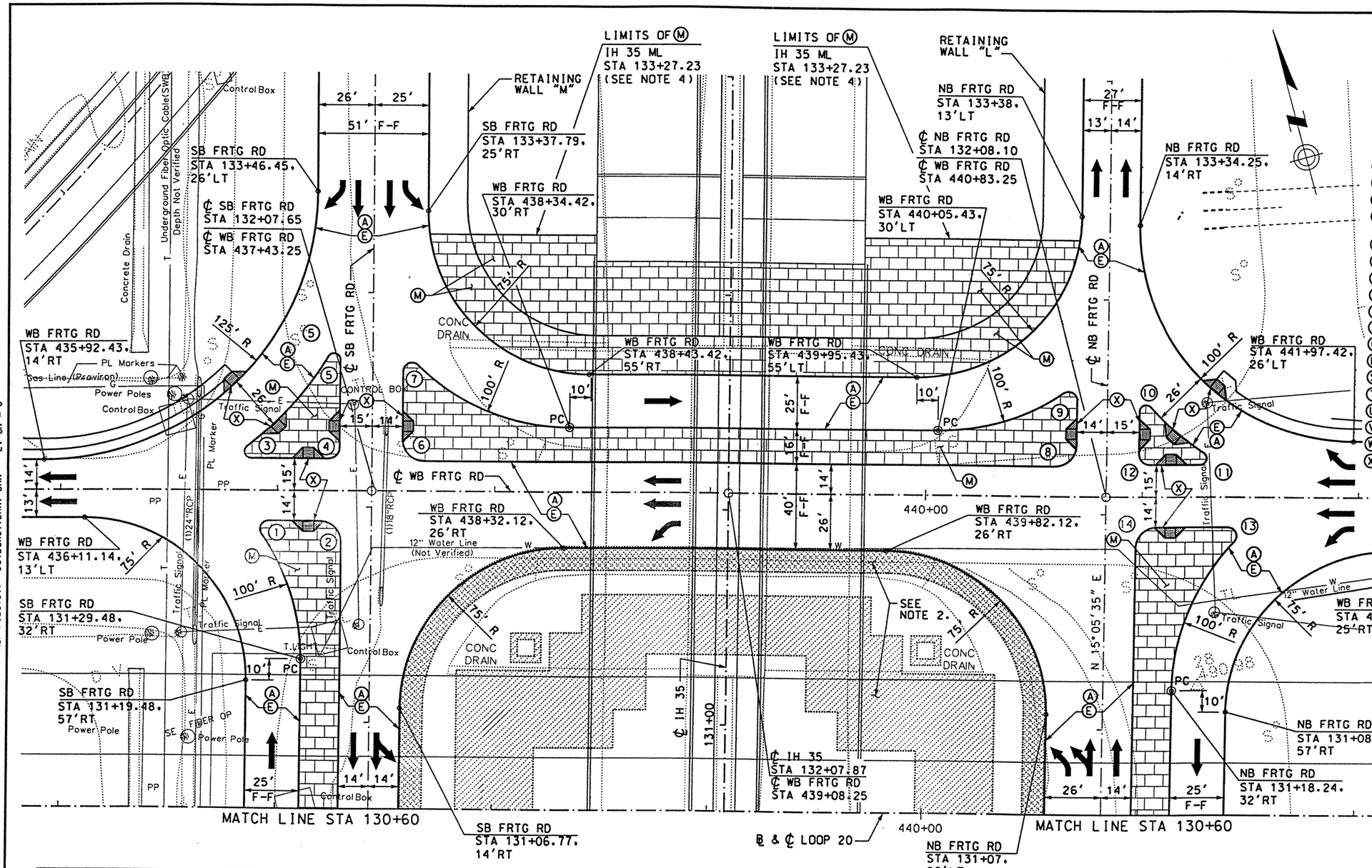

LEGEND:

- Ⓐ CONC PAV (CONT REINF HY STL)(12")
- Ⓑ ASPH CONC PAV (TY A)(4")
- Ⓒ LIME TREATED SUBGRADE (8")
- Ⓓ SINGLE SLOPE CONCRETE BARRIER (SSCB) (TYPE 2)
- Ⓔ TYPE II MONO CURB (6")
- Ⓕ CELL FIBER MULCH SEED (PERM) (RURAL)(CLAY)
- Ⓖ CLASS B RIPRAP (4")
- Ⓗ CONC SIDEWALK (4")
- Ⓘ CONC MEDIAN (6")
- Ⓙ SINGLE SLOPE TRAFFIC RAIL(SSTR) w/ DRAIN SLOTS
- Ⓚ RETAINING WALL
- Ⓛ METAL BEAM GUARD FENCE
- Ⓜ BRICK PAVERS
- Ⓝ REMOVE ASPH CONC PAV
- Ⓞ REMOVE CONC PAV
- Ⓟ TYPE II CURB AND GUTTER (6")
- Ⓠ CONCRETE DRIVEWAYS (6")
- Ⓡ ASPH CONC PAV (TY D)(2")
- Ⓢ ASPH CONC PAV (TY A)(8")
- Ⓣ PLANE ASPH CONC PAV (0 - 1")
- Ⓤ SINGLE SLOPE TRAFFIC RAIL (SSTR)
- Ⓥ CHAINLINK FENCE (6')
- Ⓦ ROADWAY UNDERDRAIN
- Ⓧ WHEELCHAIR RAMP TYPE B

MEDIAN AND ISLANDS

NUMBER	RADIUS (FT)	STATION AND OFFSET	
1	4	WB FRTG STA 436+96.10. 14'RT	
2	10	WB FRTG STA 437+19.22. 14'RT	SB FRTG STA 131+83.62. 14'LT
3	3	WB FRTG STA 436+87.70. 15'LT	
4	5	WB FRTG STA 437+23.28. 15'LT	SB FRTG STA 132+27.63. 15'LT
5	3	SB FRTG STA 132+68.82. 15'LT	
6	10	WB FRTG STA 437+19.22. 14'RT	
7	4	SB FRTG STA 132+63.70. 14'RT	
8	10	WB FRTG STA 440+59.28. 14'LT	NB FRTG STA 132+32.07. 14'LT
9	4	NB FRTG STA 132+53.05. 14'LT	
10	3	NB FRTG STA 132+48.09. 15'RT	
11	3	WB FRTG STA 441+26.87. 15'LT	
12	5	NB FRTG STA 132+28.13. 15'RT	WB FRTG STA 441+03.28. 15'LT
13	4	WB FRTG STA 441+40.09. 14'RT	
14	10	NB FRTG STA 131+84.13. 14'RT	WB FRTG STA 441+19.22. 14'RT

NOTES:

1. FOR PROFILE AND ROADWAY DETAILS SEE PLAN AND PROFILE SHEETS.
2. SEE LANDSCAPE PLAN FOR DETAILS ON BRICK PAVER LAYOUT AND QUANTITIES WITHIN THE INTERSECTION'S CENTER MEDIAN.
3. FOR ELEVATIONS AND CROSS SLOPES WITHIN THE INTERSECTION, SEE THE "LOOP 20 AND IH 35 CONTOUR GRADING PLAN
4. SEE BRIDGE LAYOUTS FOR MORE DETAILS.

STATE OF TEXAS
DERRON S. VINCIK
84028
REGISTERED PROFESSIONAL ENGINEER

The seal appearing on this document was authorized by Derron S. Vincik P.E. 84028, on MAY 13, 1999.

DATE	BY	REV	REVISION

© 1999 Texas Department of Transportation

Brown & Root
HOUSTON, TEXAS

LOOP 20 AND IH 35 INTERSECTION LAYOUT

0 25 50
SCALE: 1" = 50'

SHEET 1 OF 2

FED RD DIV NO	STATE PROJECT NO	SHEET NO
6	NH-99(462)	334

STATE	STATE DIST NO	COUNTY
TEXAS	22	WEBB

CONT	SECT	JOB	HIGHWAY NO
0018	06	131	IH 35

REF FILE(S): J01LOX01.PRO, PRO LV ON = 1-63
J01LOX01.UT1, UT1 LV ON = 1-63
J01LOX01.ILL, ILL LV ON = 20
J01LOX01.FND, FND LV ON = 35
J01LOX01.DRN, DRN LV ON = 8

REF FILE(S): J01LOX01.BCK, BCK LV ON = 1-30
J01LOX01.EOP, EOP LV ON = 1-11,13-17,19-27,29-41,43-53,5
J01LOX01.EOP, ALG LV ON = 1-44
J01LOX01.BDR, BDR LV ON = 5,10,35,45,46,57,60-62

D03LOX01.DGN-09 05-13-99 BAR_HO_ES05 \HCIVIL\CF0039\PHASE2

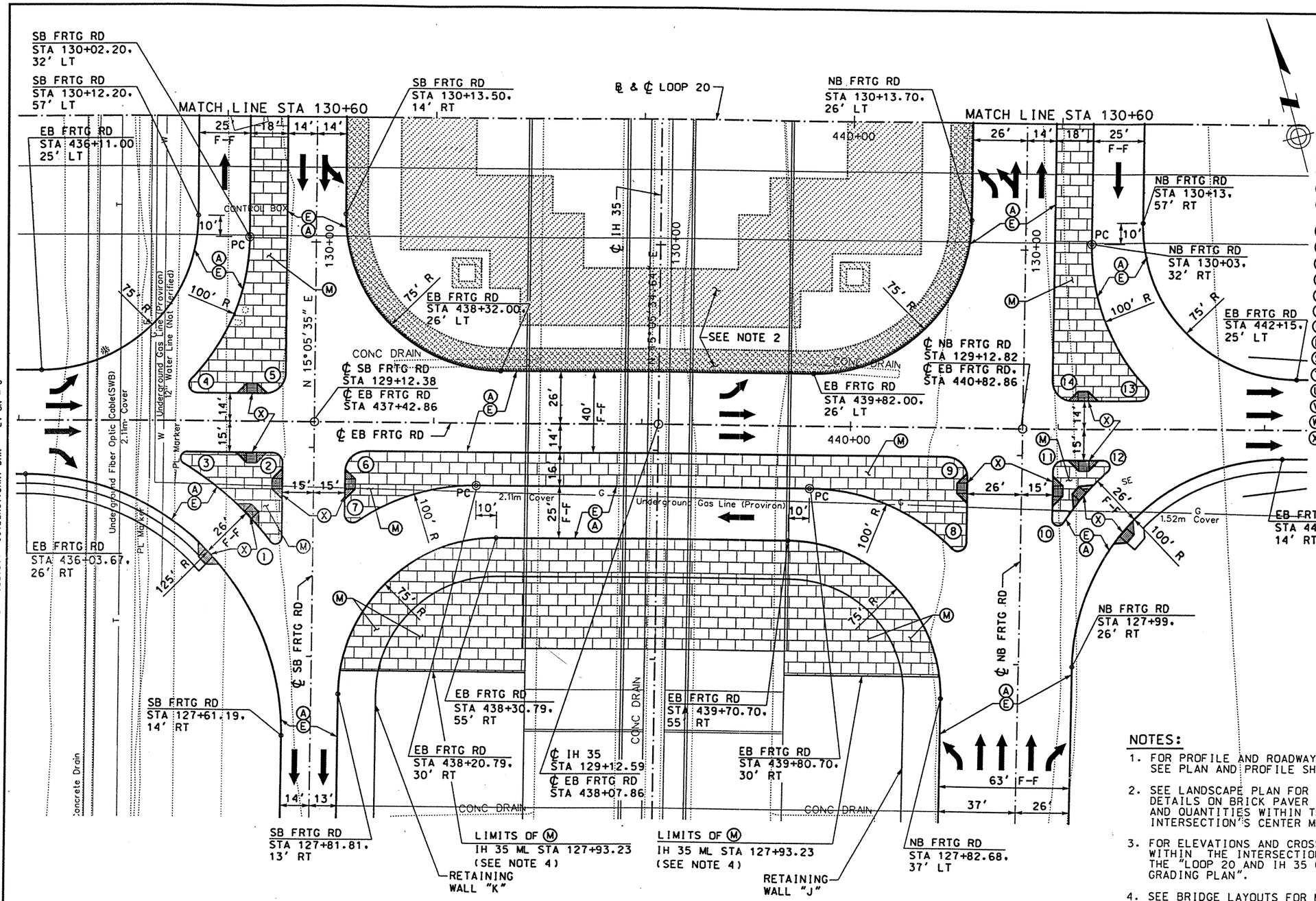

LEGEND:

- Ⓐ CONC PAV (CONT REINF HY STL)(12")
- Ⓑ ASPH CONC PAV (TY A)(4")
- Ⓒ LIME TREATED SUBGRADE (8")
- Ⓓ SINGLE SLOPE CONCRETE BARRIER (SSCB) (TYPE 2)
- Ⓔ TYPE II MONO CURB (6")
- Ⓕ CELL FIBER MULCH SEED (PERM) (RURAL)(CLAY)
- Ⓖ CLASS B RIPRAP (4")
- Ⓗ CONC SIDEWALK (4")
- Ⓘ CONC MEDIAN (6")
- Ⓙ SINGLE SLOPE TRAFFIC RAIL(SSTR) w/ DRAIN SLOTS
- Ⓚ RETAINING WALL
- Ⓛ METAL BEAM GUARD FENCE
- Ⓜ BRICK PAVERS
- Ⓝ REMOVE ASPH CONC PAV
- Ⓞ REMOVE CONC PAV
- Ⓟ TYPE II CURB AND GUTTER (6")
- Ⓠ CONCRETE DRIVEWAYS (6")
- Ⓡ ASPH CONC PAV (TY D)(2")
- Ⓢ ASPH CONC PAV (TY A)(8")
- Ⓣ PLANE ASPH CONC PAV (0 - 1")
- Ⓤ SINGLE SLOPE TRAFFIC RAIL (SSTR)
- Ⓥ CHAINLINK FENCE (6')
- Ⓦ ROADWAY UNDERDRAIN
- Ⓧ WHEELCHAIR RAMP TYPE B

NOTES:

1. FOR PROFILE AND ROADWAY DETAILS SEE PLAN AND PROFILE SHEETS.
2. SEE LANDSCAPE PLAN FOR DETAILS ON BRICK PAVER LAYOUT AND QUANTITIES WITHIN THE INTERSECTION'S CENTER MEDIAN.
3. FOR ELEVATIONS AND CROSS SLOPES WITHIN THE INTERSECTION. SEE THE "LOOP 20 AND IH 35 CONTOUR GRADING PLAN".
4. SEE BRIDGE LAYOUTS FOR MORE DETAILS.

MEDIAN AND ISLANDS

NUMBER	RADIUS (FT)	STATION AND OFFSET	
1	3	SB FRTG STA 128+56.46. 15'LT	
2	5	SB FRTG STA 128+92.35. 15'LT	EB FRTG STA 437+22.84. 15'RT
3	3	EB FRTG STA 436+81.30. 15'RT	
4	4	EB FRTG STA 436+86.03. 14'LT	
5	10	SB FRTG STA 129+36.35. 14'LT	EB FRTG STA 437+18.90. 14'LT
6	10	SB FRTG STA 128+88.41. 15'RT	EB FRTG STA 437+67.83. 14'RT
7	4	SB FRTG STA 128+68.05. 15'RT	

MEDIAN AND ISLANDS

NUMBER	RADIUS (FT)	STATION AND OFFSET	
8	4	NB FRTG STA 128+57.74. 26'LT	
9	10	NB FRTG STA 128+88.78. 26'RT	EB FRTG STA 440+46.83. 14'RT
10	3	NB FRTG STA 128+69.54. 15'RT	
11	5	NB FRTG STA 128+92.85. 15'RT	EB FRTG STA 441+02.84. 15'RT
12	3	WB FRTG STA 441+22.55. 15'RT	
13	4	WB FRTG STA 441+39.93. 14'LT	
14	10	NB FRTG STA 129+36.86. 14'RT	EB FRTG STA 441+06.89. 14'LT

STATE OF TEXAS
DERRON S. VINCIK
84028
REGISTERED PROFESSIONAL ENGINEER

The seal appearing on this document was authorized by Derron S. Vincik P.E. 84028, on MAY 13, 1999.

Derron S. Vincik

DATE	BY	REV	REVISION

© 1999 Texas Department of Transportation

Brown & Root
HOUSTON, TEXAS

LOOP 20 AND IH 35 INTERSECTION LAYOUT

0 25 50
SCALE: 1" = 50'

SHEET 2 OF 2

FED RD DIV NO	STATE PROJECT NO		SHEET NO
6	NH-99(462)		335
STATE	STATE DIST NO	COUNTY	
TEXAS	22	WEBB	
CONT	SECT	JOB	HIGHWAY NO
0018	06	131	IH 35

REF FILE(S): J01LOX01.BCK, BCK LV ON = 1-30
J01LOX01.EOP, EOP LV ON = 1-11,13-17,19-27,29-41,43-53,5
J01LOX01.EOP, ALG LV ON = 1-44
J01LOX01.BDR, BDR LV ON = 5,10,35,45,46,57,60-62
REF FILE(S): J01LOX01.UTI, UTI LV ON = 1-63
J01LOX01.ILL, ILL LV ON = 20
J01LOX01.FND, FND LV ON = 35
J01LOX01.DRN, DRN LV ON = 8

D03LOX02.DGN-09 05-13-99 BAR_HO_ES05 \HCIVIL\CF0039\PHASE2

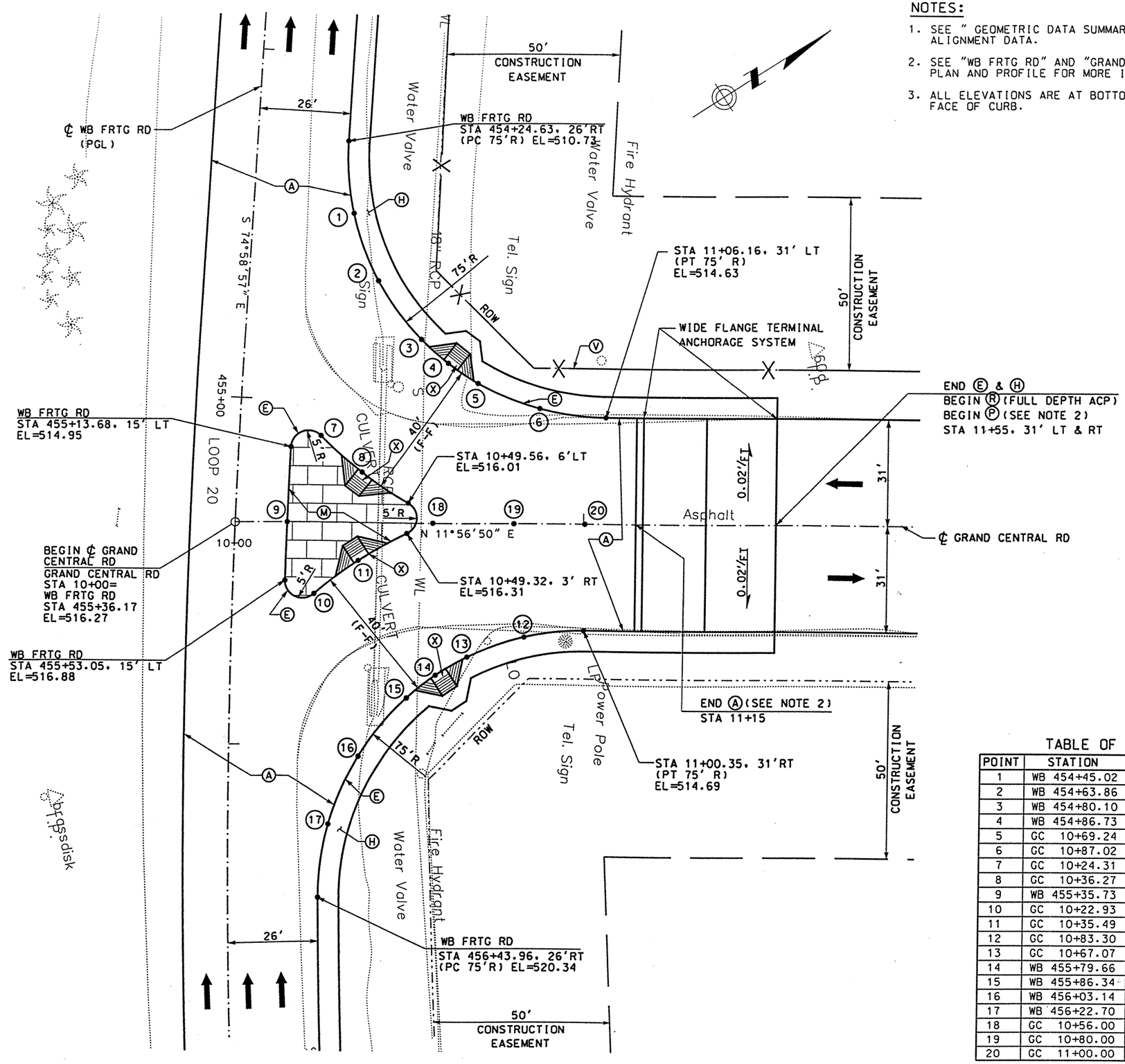

NOTES:

1. SEE " GEOMETRIC DATA SUMMARY" FOR ALIGNMENT DATA.
2. SEE "WB FRTG RD" AND "GRAND CENTRAL ROAD" PLAN AND PROFILE FOR MORE INFORMATION.
3. ALL ELEVATIONS ARE AT BOTTOM FACE OF CURB.

LEGEND:

- Ⓐ CONC PAV (CONT REINF HY STL)(12")
- Ⓑ ASPH CONC PAV (TY A)(4")
- Ⓒ LIME TREATED SUBGRADE (8")
- Ⓓ SINGLE SLOPE CONCRETE BARRIER (SSCB) (TYPE 2)
- Ⓔ TYPE II MONO CURB (6")
- Ⓕ CELL FIBER MULCH SEED (PERM) (RURAL)(CLAY)
- Ⓖ CLASS B RIPRAP (4")
- Ⓗ CONC SIDEWALK (4")
- Ⓘ CONC MEDIAN (6")
- Ⓙ SINGLE SLOPE TRAFFIC RAIL(SSTR) w/ DRAIN SLOTS
- Ⓚ RETAINING WALL
- Ⓛ METAL BEAM GUARD FENCE
- Ⓜ BRICK PAVERS
- Ⓝ REMOVE ASPH CONC PAV
- Ⓞ REMOVE CONC PAV
- Ⓟ TYPE II CURB AND GUTTER (6")
- Ⓠ CONCRETE DRIVEWAYS (6")
- Ⓡ ASPH CONC PAV (TY D)(2")
- Ⓢ ASPH CONC PAV (TY A)(8")
- Ⓣ PLANE ASPH CONC PAV (0 - 1")
- Ⓤ SINGLE SLOPE TRAFFIC RAIL (SSTR)
- Ⓥ CHAINLINK FENCE (6')
- Ⓦ ROADWAY UNDERDRAIN
- Ⓧ WHEELCHAIR RAMP TYPE B

TABLE OF ELEVATIONS

POINT	STATION	OFFSET	ELEV
1	WB 454+45.02	28.83' LT	511.71
2	WB 454+63.86	37.08' LT	512.68
3	WB 454+80.10	50.52' LT	513.66
4	WB 454+86.73	58.70' LT	514.27
5	GC 10+69.24	40.71' LT	514.87
6	GC 10+87.02	33.48' LT	514.85
7	GC 10+24.31	25.21' LT	514.60
8	GC 10+36.27	14.67' LT	515.93
9	WB 455+35.73	15.00' LT	516.05
10	GC 10+22.93	20.97' RT	517.37
11	GC 10+35.49	11.03' RT	516.84
12	GC 10+83.30	32.96' RT	515.32
13	GC 10+67.07	38.79' RT	515.93
14	WB 455+79.66	58.88' LT	516.56
15	WB 455+86.34	50.78' LT	517.18
16	WB 456+03.14	37.30' LT	518.22
17	WB 456+22.70	28.90' LT	519.26
18	GC 10+56.00	0.00'	516.18
19	GC 10+80.00	0.00'	515.62
20	GC 11+00.00	0.00'	515.32

NEW SHT. 6-25-99
SEE REVISION

STATE OF TEXAS
DERRON S. VINCIK
84028
REGISTERED PROFESSIONAL ENGINEER

The seal appearing on this document was authorized by Derron S. Vincik P.E. 84028, on June 3, 1999.

DATE	BY	REV	REVISION

© 1999 Texas Department of Transportation

Brown & Root
HOUSTON, TEXAS

LOOP 20
GRAND CENTRAL RD
INTERSECTION LAYOUT

0 25 50
SCALE: 1" = 30'

SHEET 1 OF 1

FED RD DIV NO	STATE PROJECT NO	SHEET NO
6	C86-14-23	335A

STATE	STATE DIST NO	COUNTY
TEXAS	22	WEBB

CONT	SECT	JOB	HIGHWAY NO
0086	14	023	LOOP 20

D05GCX01.DGN-04 06-02-99 BAR_HO_ES05 \HCIVIL\CF0039\PHASE2

REF FILE(S): J03ASX01.SUR, SUR LV ON = 0
J01LOX01.ROW, ROW LV ON = 1-20.22-61.63
J01LOX01.PRO, PRO LV ON = 1-63
BRIDGE.UTI, UTI LV ON = 1-63
J01LOX01.DRN, DRN LV ON = 8

REF FILE(S): J01LOX01.SUR, SUR LV ON = 1-30
J01LOX01.ROW, ROW LV ON = 1-11.13-17.19-27.29-41.43-53.5
J01LOX01.PRO, PRO LV ON = 1-44
J01LOX01.ALG, ALG LV ON = 5.10.35.45.46.57.60-62

REF FILE(S): BRIDGE01.BCK, BCK LV ON = 1-30
J01LOX01.EOP, EOP LV ON = 1-11.13-17.19-27.29-41.43-53.5
J01LOX01.ALG, ALG LV ON = 1-44
J01LOX01.BDR, BDR LV ON = 5.10.35.45.46.57.60-62

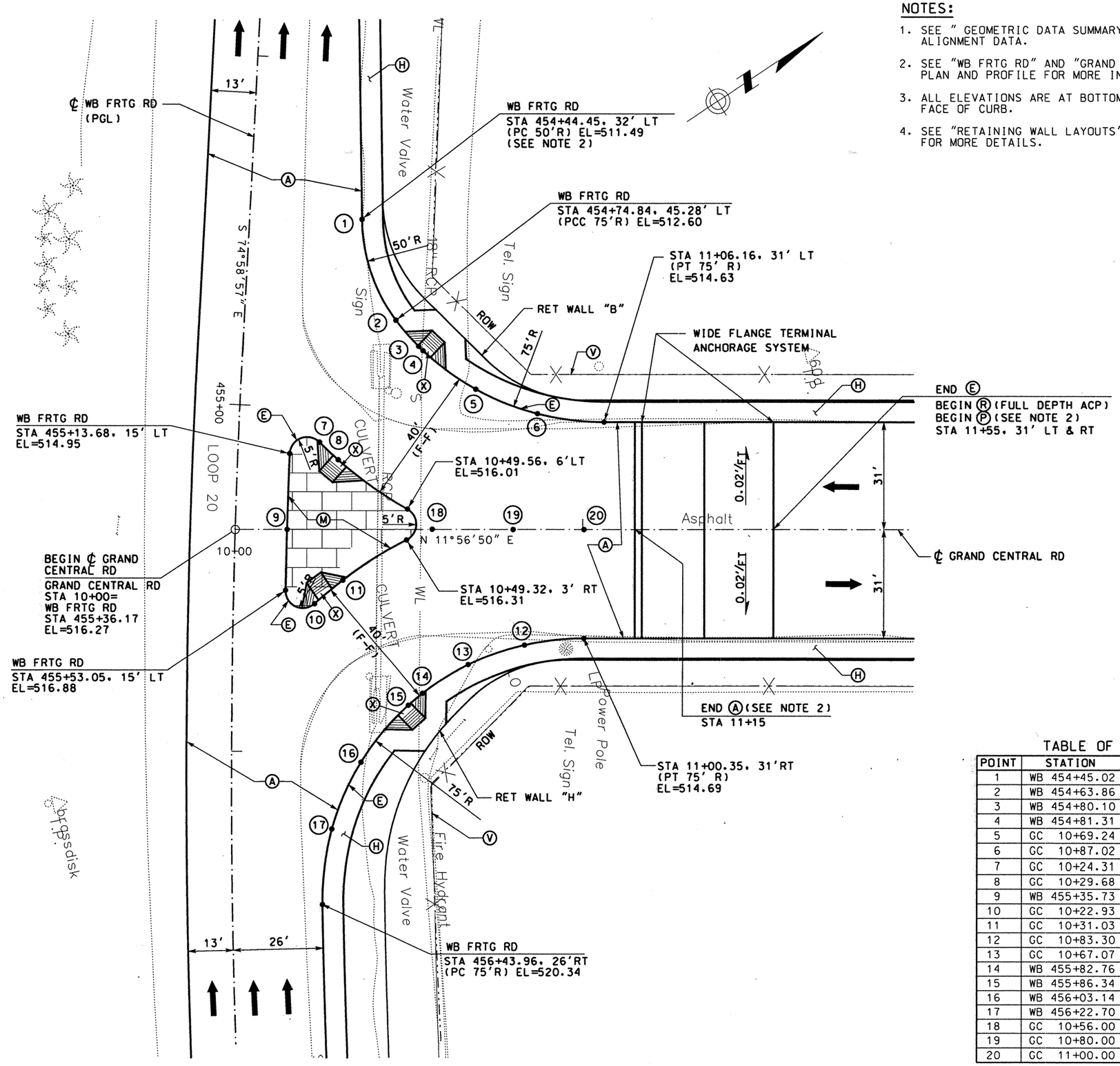

NOTES:

1. SEE " GEOMETRIC DATA SUMMARY" FOR ALIGNMENT DATA.
2. SEE "WB FRTG RD" AND "GRAND CENTRAL ROAD" PLAN AND PROFILE FOR MORE INFORMATION.
3. ALL ELEVATIONS ARE AT BOTTOM FACE OF CURB.
4. SEE "RETAINING WALL LAYOUTS" "B" & "H" FOR MORE DETAILS.

LEGEND:

- Ⓐ CONC PAV (CONT REINF HY STL)(12")
- Ⓑ ASPH CONC PAV (TY A)(4")
- Ⓒ LIME TREATED SUBGRADE (8")
- Ⓓ SINGLE SLOPE CONCRETE BARRIER (SSCB) (TYPE 2)
- Ⓔ TYPE II MONO CURB (6")
- Ⓕ CELL FIBER MULCH SEED (PERM) (RURAL)(CLAY)
- Ⓖ CLASS B RIPRAP (4")
- Ⓗ CONC SIDEWALK (4")
- Ⓘ CONC MEDIAN (6")
- Ⓙ SINGLE SLOPE TRAFFIC RAIL(SSTR) w/ DRAIN SLOTS
- Ⓚ RETAINING WALL
- Ⓛ METAL BEAM GUARD FENCE
- Ⓜ BRICK PAVERS
- Ⓝ REMOVE ASPH CONC PAV
- Ⓞ REMOVE CONC PAV
- Ⓟ TYPE II CURB AND GUTTER (6")
- Ⓠ CONCRETE DRIVEWAYS (6")
- Ⓡ ASPH CONC PAV (TY D)(2")
- Ⓢ ASPH CONC PAV (TY A)(8")
- Ⓣ PLANE ASPH CONC PAV (0 - 1")
- Ⓤ SINGLE SLOPE TRAFFIC RAIL (SSTR)
- Ⓥ CHAINLINK FENCE (6')
- Ⓦ ROADWAY UNDERDRAIN
- Ⓧ WHEELCHAIR RAMP TYPE B

TABLE OF ELEVATIONS

POINT	STATION	OFFSET	ELEV
1	WB 454+45.02	28.83' LT	511.71
2	WB 454+63.86	37.08' LT	512.68
3	WB 454+80.10	50.52' LT	513.66
4	WB 454+81.31	51.87' LT	514.25
5	GC 10+69.24	40.71' LT	514.87
6	GC 10+87.02	33.48' LT	514.85
7	GC 10+24.31	25.21' LT	514.60
8	GC 10+29.68	20.11' LT	515.96
9	WB 455+35.73	15.00' LT	516.05
10	GC 10+22.93	20.97' RT	517.37
11	GC 10+31.03	14.24' RT	516.88
12	GC 10+83.30	32.96' RT	515.32
13	GC 10+67.07	38.79' RT	515.93
14	WB 455+82.76	54.85' LT	516.62
15	WB 455+86.34	50.78' LT	517.18
16	WB 456+03.14	37.30' LT	518.22
17	WB 456+22.70	28.90' LT	519.26
18	GC 10+56.00	0.00'	516.18
19	GC 10+80.00	0.00'	515.62
20	GC 11+00.00	0.00'	515.32

STATE OF TEXAS
DERRON S. VINCIK
84028
REGISTERED PROFESSIONAL ENGINEER

The seal appearing on this document was authorized by Derron S. Vincik P.E. 84028, on September 30, 1999.

DATE	BY	REV	REVISION
9/29/99	DV	01	RETAINING WALL "B" & "H"

© 1999 Texas Department of Transportation

Brown & Root
HOUSTON, TEXAS

LOOP 20
GRAND CENTRAL RD
INTERSECTION LAYOUT

0 25 50
SCALE: 1" = 30'

SHEET 1 OF 1

FED RD DIV NO	STATE PROJECT NO		SHEET NO
6	C86-14-23		335A
STATE	STATE DIST NO	COUNTY	
TEXAS	22	WEBB	
CONT	SECT	JOB	HIGHWAY NO
0086	14	023	LOOP 20

D05GCX01.DGN-05 09-29-99 BAR_HO_ES05 \HCIVIL\CF0039\PHASE2

REF FILE(S): J03ASX01.SUR, SUR LV ON = 2-60
J01LOX01.RDW, RDW LV ON = 1-20,22-61,63
J01LOX01.PRO, PRO LV ON = 1-63
BRIDGE.UTI, UTI LV ON = 1-63
REF FILE(S): J01LOX01.DRN, DRN LV ON = 8

REF FILE(S): BRIDGE01.BCK, BCK LV ON = 1-30
J01LOX01.EOP, EOP LV ON = 1-11,13-17,19-27,29-41,43-53,5
J01LOX01.ALG, ALG LV ON = 1-44
J01LOX01.BDR, BDR LV ON = 5,10,35,45,46,57,60-62

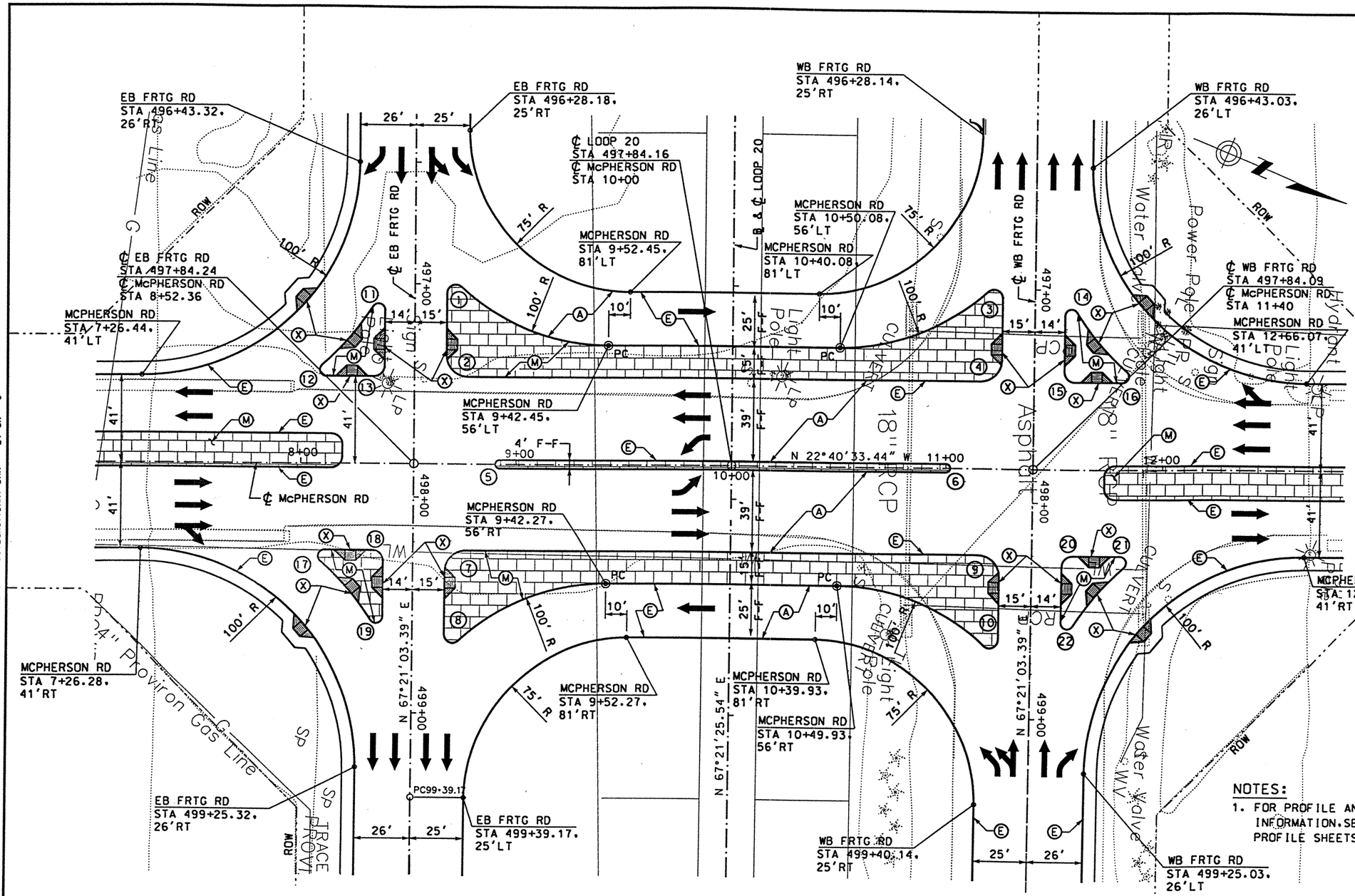

LEGEND:

- Ⓐ CONC PAV (CONT REINF HY STL)(12")
- Ⓑ ASPH CONC PAV (TY A)(4")
- Ⓒ LIME TREATED SUBGRADE (8")
- Ⓓ SINGLE SLOPE CONCRETE BARRIER (SSCB) (TYPE 2)
- Ⓔ TYPE II MONO CURB (6")
- Ⓕ CELL FIBER MULCH SEED (PERM) (RURAL)(CLAY)
- Ⓖ CLASS B RIPRAP (4")
- Ⓗ CONC SIDEWALK (4")
- Ⓘ CONC MEDIAN (6")
- Ⓙ SINGLE SLOPE TRAFFIC RAIL(SSTR) w/ DRAIN SLOTS
- Ⓚ RETAINING WALL
- Ⓛ METAL BEAM GUARD FENCE
- Ⓜ BRICK PAVERS
- Ⓝ REMOVE ASPH CONC PAV
- Ⓞ REMOVE CONC PAV
- Ⓟ TYPE II CURB AND GUTTER (6")
- Ⓠ CONCRETE DRIVEWAYS (6")
- Ⓡ ASPH CONC PAV (TY D)(2")
- Ⓢ ASPH CONC PAV (TY A)(8")
- Ⓣ PLANE ASPH CONC PAV (0 - 1")
- Ⓤ SINGLE SLOPE TRAFFIC RAIL (SSTR)
- Ⓥ CHAINLINK FENCE (6')
- Ⓦ ROADWAY UNDERDRAIN
- Ⓧ WHEELCHAIR RAMP TYPE B

MEDIAN AND ISLANDS

NUMBER	RADIUS (FT)	STATION AND OFFSET	
1	4	EB FRTG STA 497+04.18. 15'LT	
2	10	EB FRTG STA 497+33.23. 15'LT	McPHERSON STA 8+67.40. 41'LT
3	4	WB FRTG STA 497+04.13. 15'RT	
4	10	WB FRTG STA 497+33.10. 15'RT	McPHERSON STA 11+25.03. 41'LT
5	2	McPHERSON STA 8+92.37. 2'LT	
6	2	McPHERSON STA 11+00.00. 2'LT	
7	10	EB FRTG STA 498+35.23. 15'LT	McPHERSON STA 8+67.33. 41'RT
8	4	EB FRTG STA 498+64.20. 15'LT	
9	10	WB FRTG STA 498+35.10. 15'RT	McPHERSON STA 11+24.98. 41'RT
10	4	WB FRTG STA 498+64.14. 15'RT	

MEDIAN AND ISLANDS

NUMBER	RADIUS (FT)	STATION AND OFFSET	
11	3	EB FRTG STA 497+12.31. 14'RT	
12	3		McPHERSON STA 8+11.49. 41'LT
13	5	EB FRTG STA 497+38.25. 14'RT	McPHERSON STA 8+33.39. 41'LT
14	3	WB FRTG STA 497+12.03. 14'LT	
15	5	WB FRTG STA 497+38.08. 14'LT	McPHERSON STA 11+59.02. 41'LT
16	3		McPHERSON STA 11+81.03. 41'LT
17	3		McPHERSON STA 8+11.32. 41'RT
18	5	EB FRTG STA 498+30.25. 14'RT	McPHERSON STA 8+33.26. 41'RT
19	3	EB FRTG STA 498+56.32. 14'RT	
20	5	WB FRTG STA 498+30.08. 14'LT	McPHERSON STA 11+58.98. 41'RT
21	3		McPHERSON STA 11+80.90. 41'RT
22	3	WB FRTG STA 498+56.04. 14'LT	

NOTES:

1. FOR PROFILE AND ROADWAY INFORMATION, SEE PLAN AND PROFILE SHEETS.

STATE OF TEXAS
DERRON S. VINCIK
P.E. 84028
REGISTERED PROFESSIONAL ENGINEER

The seal appearing on this document was authorized by Derron S. Vincik P.E. 84028, on MAY 13, 1999.

Derron S. Vincik

DATE	BY	REV	REVISION

© 1999 Texas Department of Transportation

Brown & Root
HOUSTON, TEXAS

LOOP 20

MCPHERSON ROAD
INTERSECTION LAYOUT

0 25 50
SCALE: 1" = 50'

SHEET 1 OF 1

FED RD DIV NO	STATE PROJECT NO	SHEET NO
6	C86-14-23	336

STATE	STATE DIST NO	COUNTY
TEXAS	22	WEBB

CONT	SECT	JOB	HIGHWAY NO
0086	14	023	LOOP 20

D05LOX01.DGN-06 05-13-99 BAR_HO_ES05 \HCIVIL\CF0039\PHASE2

REF FILE(S): J01LOX01.PRO, J01LOX01.UTI, J01LOX01.ILL, J01LOX01.FND, J01LOX01.DRN, J01LOX01.BCK, J01LOX01.EOP, J01LOX01.ALG, J01LOX01.BDR

LV ON = 1-63, LV ON = 1-63, LV ON = 20, LV ON = 35, LV ON = 8, LV ON = 1-30, LV ON = 1-11,13-17,19-27,29-41,43-53,5, LV ON = 1-44, LV ON = 5,10,35,45,46,57,60-62

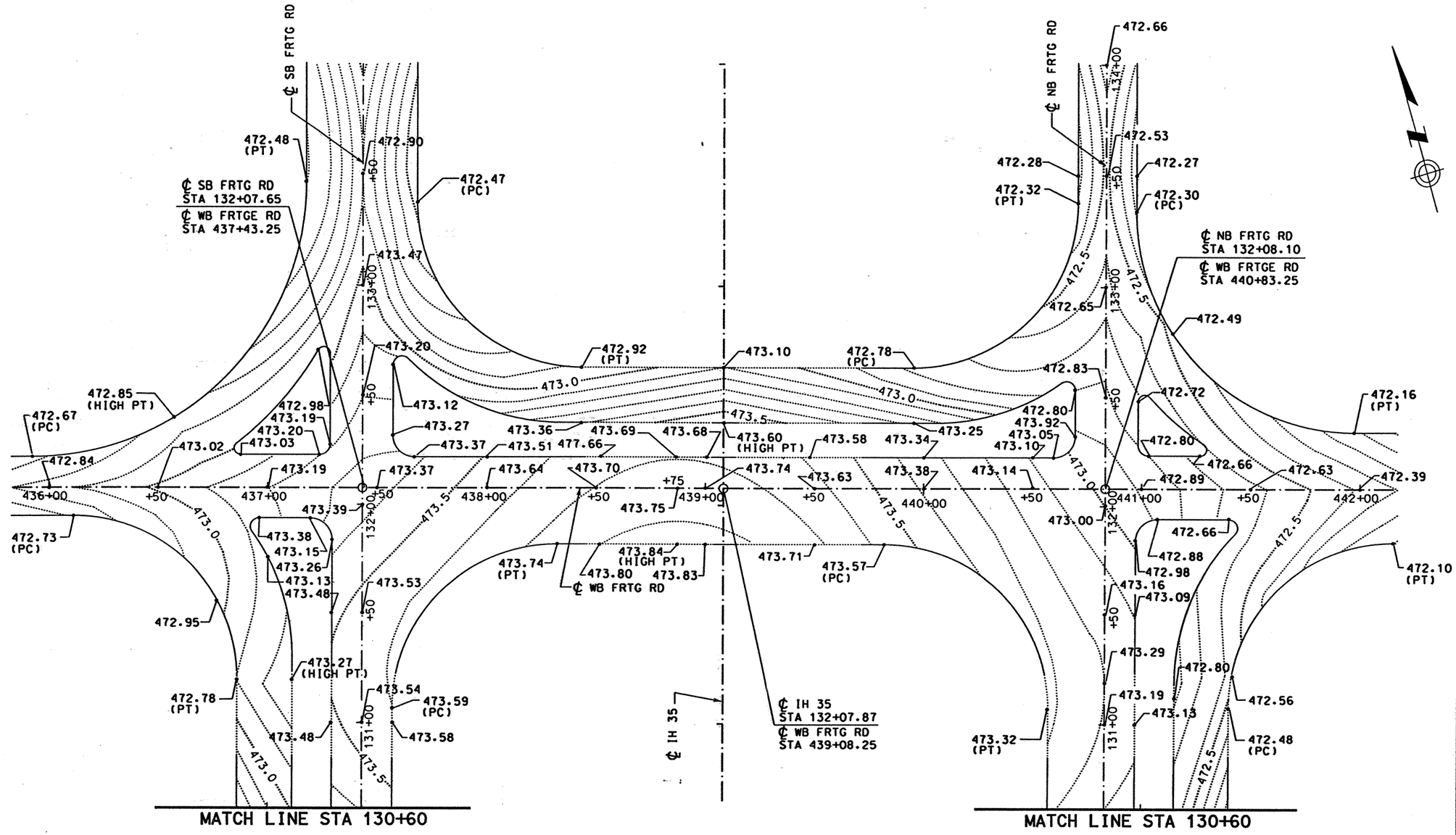

NOTES:

1. SEE "LOOP 20/IH 35 INTERSECTION LAYOUT" FOR MORE DETAILS.
2. FOR PROFILE AND ROADWAY DETAILS SEE PLAN AND PROFILE SHEETS.

STATE OF TEXAS
DERRON S. VINCIK
84028
REGISTERED PROFESSIONAL ENGINEER

The seal appearing on this document was authorized by Derron S. Vincik P.E. 84028, on April 2, 1999.

Derron S. Vincik

DATE	BY	REV	REVISION

© 1999 Texas Department of Transportation

Brown & Root
HOUSTON, TEXAS

LOOP 20
AND
IH 35

CONTOUR GRADING PLAN

0 25 50
SCALE: 1"= 50'

SHEET 1 OF 2

FED RD DIV NO	STATE PROJECT NO		SHEET NO
6	C86-14-23		337
STATE	STATE DIST NO	COUNTY	
TEXAS	22	WEBB	
CONT	SECT	JOB	HIGHWAY NO
0086	14	023	LOOP 20

D04LHX01.DGN-05 03-12-99 BAR_HO_ES05 \HCIVIL\CF0039\PHASE2

REF FILE(S): J01LOX01.UTI, UTI LV ON = 1-63
J01LOX01.ILL, ILL LV ON = 20
J01LOX01.FND, FND LV ON = 35
J01LOX01.DRN, DRN LV ON = 8

REF FILE(S): J01LOX01.BCK, BCK LV ON =
J01LOX01.EOP, EOP LV ON = 1-30
J01LOX01.EOP, ALG LV ON = 1-11,13-17,19-27,29-41,43-53,5
J01LOX01.BDR, BDR LV ON = 1-44
LV ON = 5,10,35,45,46,57,60-62

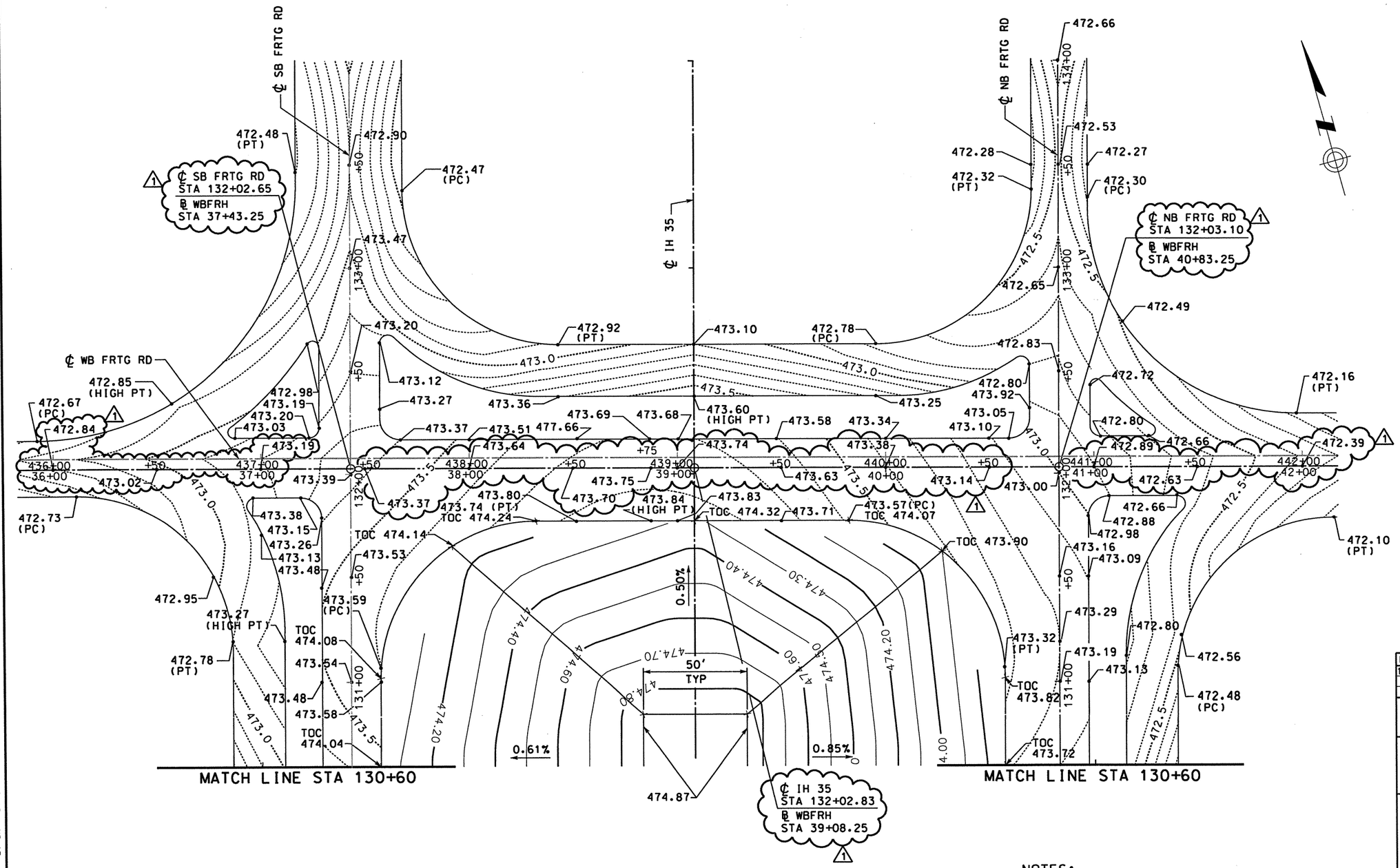

LEGEND

TOC - TOP OF CURB

NOTES:

1. SEE "LOOP 20/IH 35 INTERSECTION LAYOUT" FOR MORE DETAILS.
2. FOR PROFILE AND ROADWAY DETAILS SEE PLAN AND PROFILE SHEETS.

STATE OF TEXAS
A. A. ABUGATTAS
34940
REGISTERED PROFESSIONAL ENGINEER

The seal appearing on this document was authorized by A. A. Abugattas P.E. 34940, on March 09, 2005.

DATE	BY	REV	REVISION
12/20/02	RS	1	WORK AUTHORIZATION #1

© 1999 Texas Department of Transportation

Brown & Root
HOUSTON, TEXAS

LOOP 20
AND
IH 35

CONTOUR GRADING PLAN

0 25 50
SCALE: 1"= 50'

SHEET 1 OF 2

FED RD DIV NO	STATE PROJECT NO	SHEET NO
6	C86-14-23	337

STATE	STATE DIST NO	COUNTY
TEXAS	22	WEBB

CONT	SECT	JOB	HIGHWAY NO
0086	14	023	LOOP 20

D04LHX01.DGN-08 03-12-99 BAR_HO_ES05 \HCIVIL\CF0039\PHASE2

REF FILE(S): J01LOX01.BCK, BCK LV ON = 1-30
J01LOX01.EOP, EOP LV ON = 1-11,13-17,19-27,29-41,43-53,5
J01LOX01.EOP, ALG LV ON = 1-44
J01LOX01.BDR, BDR LV ON = 5,10,35,45,46,57,60-62

REF FILE(S): J01LOX01.UTI, UTI LV ON = 1-63
J01LOX01.ILL, ILL LV ON = 20
J01LOX01.FND, FND LV ON = 35
J01LOX01.DRN, DRN LV ON = 8

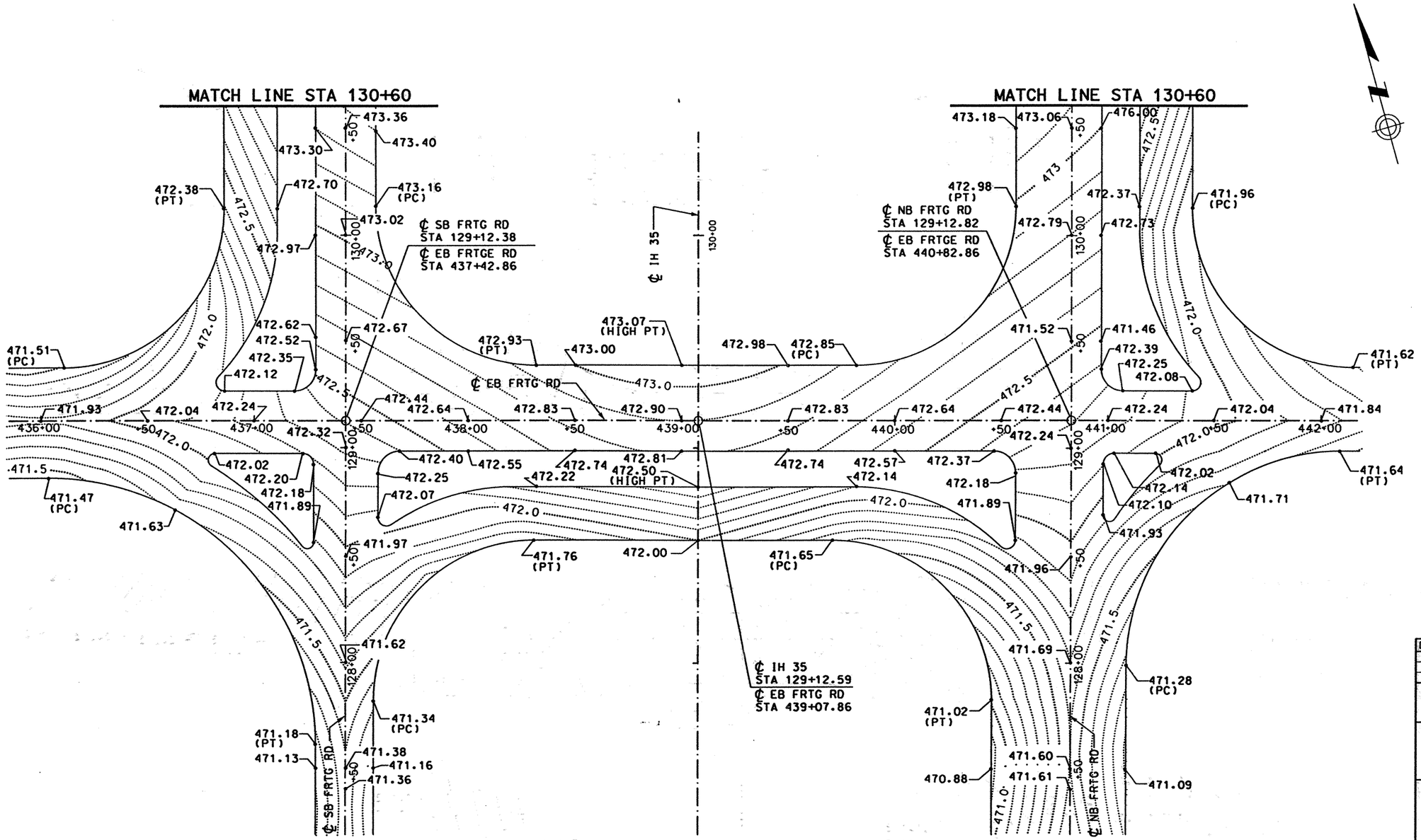

NOTES:

1. SEE "LOOP 20/IH 35 INTERSECTION LAYOUT" FOR MORE DETAILS.
2. FOR PROFILE AND ROADWAY DETAILS SEE PLAN AND PROFILE SHEETS.

STATE OF TEXAS
DERRON S. VINCIK
84028
REGISTERED PROFESSIONAL ENGINEER

The seal appearing on this document was authorized by Derron S. Vincik P.E. 84028, on April 2, 1999.

Derron S. Vincik

DATE	BY	REV	REVISION

© 1999 Texas Department of Transportation

Brown & Root
HOUSTON, TEXAS

LOOP 20
AND
IH 35

CONTOUR GRADING PLAN

0 25 50
SCALE: 1"= 50'

SHEET 2 OF 2

FED RD DIV NO	STATE PROJECT NO		SHEET NO
6	C86-14-23		338
STATE	STATE DIST NO		COUNTY
TEXAS	22		WEBB
CONT	SECT	JOB	HIGHWAY NO
0086	14	023	LOOP 20

D04LHX02.DGN-06 03-12-99 BAR_HO_ES05 \HCIVIL\CF0039\PHASE2

REF FILE(S): J01LOX01.BCK, BCK LV ON = J01LOX01.BDR, BDR LV ON = 5,10,35,45,46,57,60-62
J01LOX01.EOP, EOP LV ON = 1-30
J01LOX01.EOP, ALG LV ON = 1-11,13-17,19-27,29-41,43-53,5
J01LOX01.BDR, BDR LV ON = 1-44
J01LOX01.FND, FND LV ON = 20
J01LOX01.DRN, DRN LV ON = 35
J01LOX01.PRO, PRO LV ON = 1-63
J01LOX01.UTI, UTI LV ON = 1-63
J01LOX01.ILL, ILL LV ON = 20
J01LOX01.FND, FND LV ON = 35
J01LOX01.DRN, DRN LV ON = 8

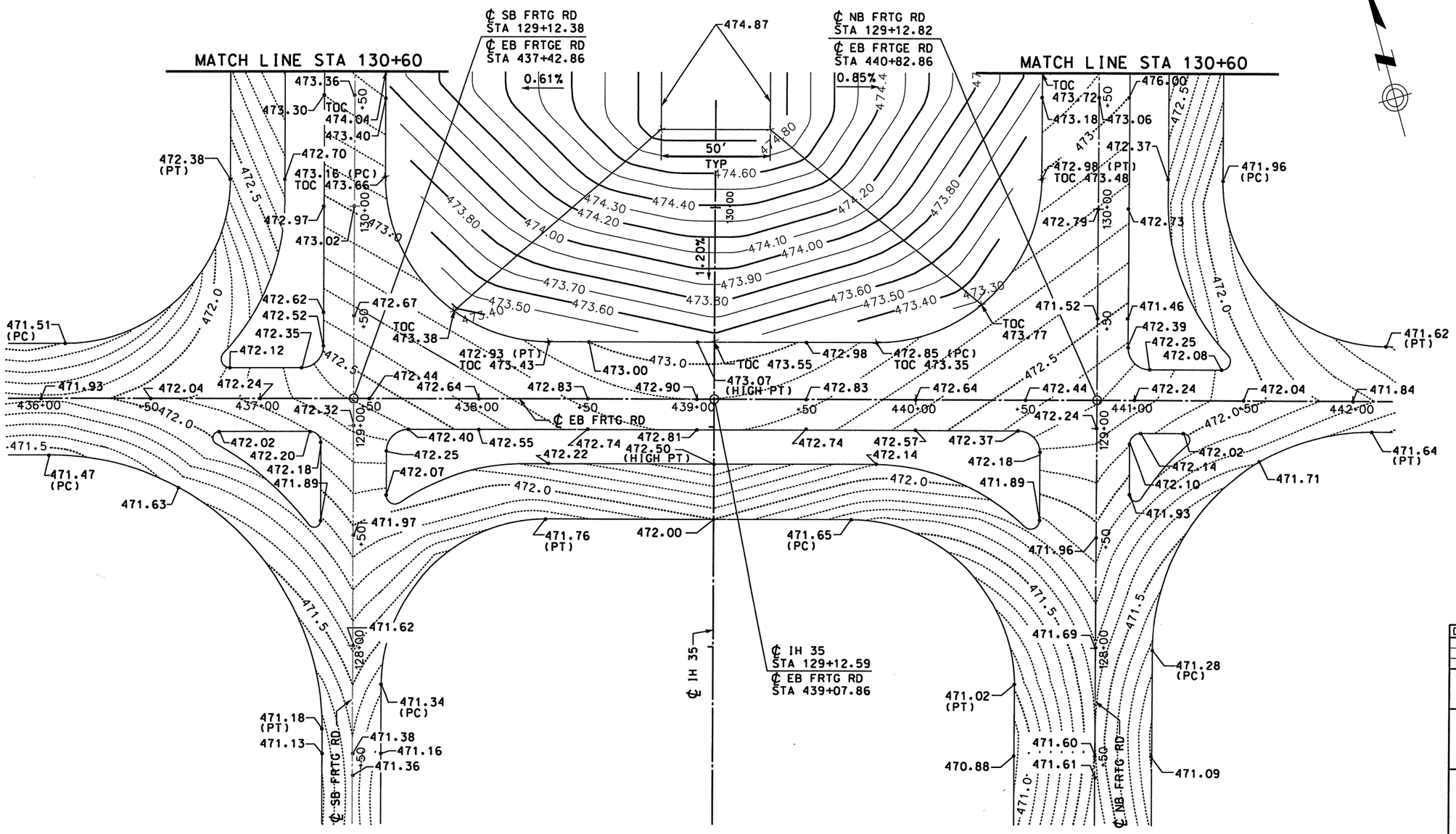

LEGEND

TOC - TOP OF CURB

NOTES:

1. SEE "LOOP 20/IH 35 INTERSECTION LAYOUT" FOR MORE DETAILS.
2. FOR PROFILE AND ROADWAY DETAILS SEE PLAN AND PROFILE SHEETS.

STATE OF TEXAS
A. A. ABUGATTAS
34940
REGISTERED PROFESSIONAL ENGINEER

The seal appearing on this document was authorized by A. A. Abugattas P.E. 34940, on March 09, 2005.

DATE	BY	REV	REVISION

© 1999 Texas Department of Transportation

Brown & Root
HOUSTON, TEXAS

LOOP 20
AND
IH 35

CONTOUR GRADING PLAN

0 25 50
SCALE: 1"= 50'

SHEET 2 OF 2

FED RD DIV NO	STATE PROJECT NO	SHEET NO
6	C86-14-23	338

STATE	STATE DIST NO	COUNTY
TEXAS	22	WEBB

CONT	SECT	JOB	HIGHWAY NO
0086	14	023	LOOP 20

D04LHX02.DGN-07 03-12-99 BAR_HO_ES05 \HCIVIL\CF0039\PHASE2

REF FILE(S): J01LOX01.BDR, BDR LV ON = 5,10,35,45,46,57,60-62
J01LOX01.BCK, BCK LV ON = 1-30
J01LOX01.EOP, EOP LV ON = 1-11,13-17,19-27,29-41,43-53,5
J01LOX01.EOP, ALG LV ON = 1-44

REF FILE(S): J01LOX01.DRN, DRN LV ON = 8
J01LOX01.FND, FND LV ON = 35
J01LOX01.ILL, ILL LV ON = 20
J01LOX01.UTI, UTI LV ON = 1-63
J01LOX01.PRO, PRO LV ON = 1-63

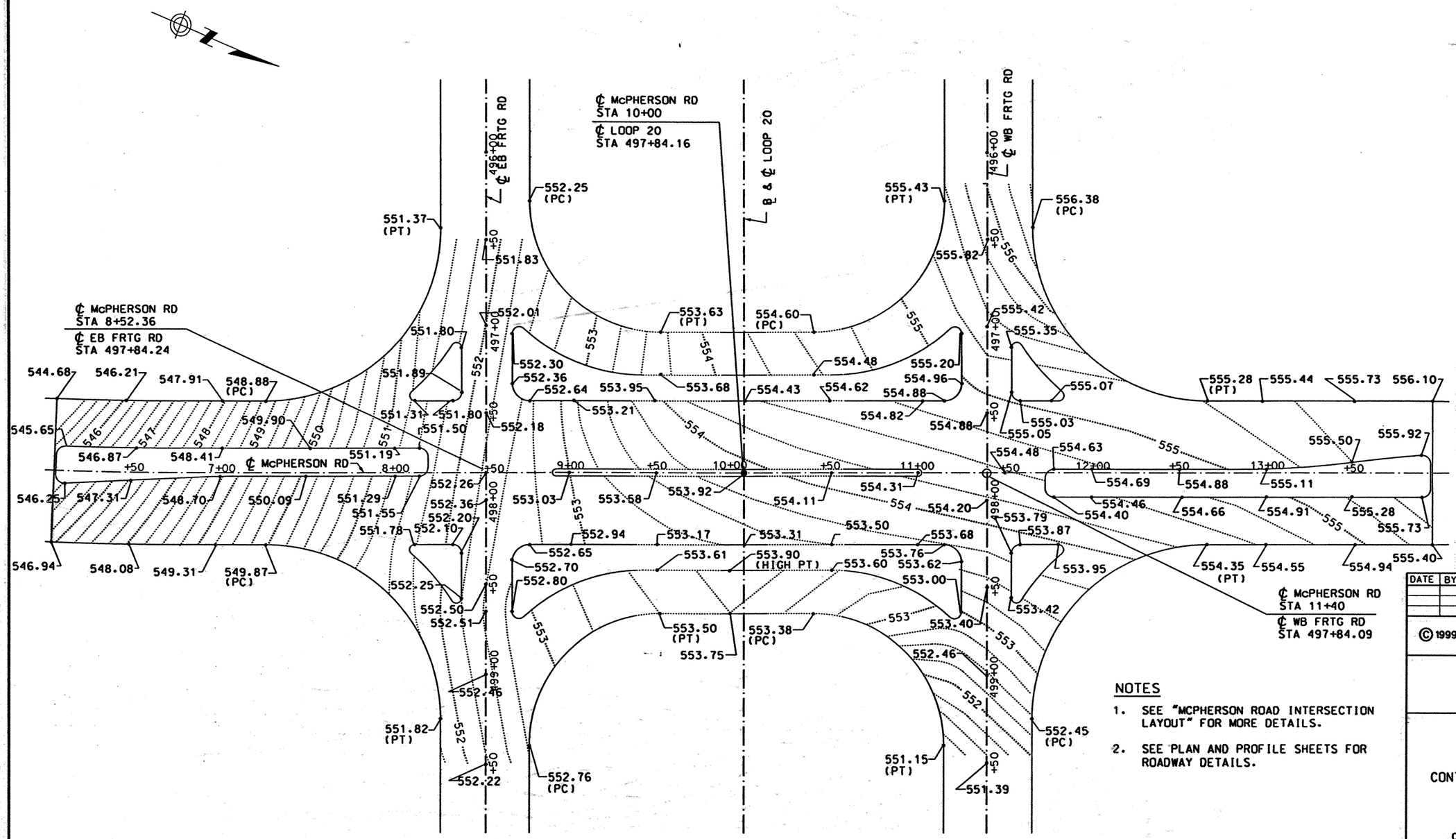

NOTES

1. SEE "MCPHERSON ROAD INTERSECTION LAYOUT" FOR MORE DETAILS.
2. SEE PLAN AND PROFILE SHEETS FOR ROADWAY DETAILS.

STATE OF TEXAS
DERRON S. VINCIK
84028
REGISTERED PROFESSIONAL ENGINEER

The seal appearing on this document was authorized by Derron S. Vincik P.E. 84028, on April 2, 1999.

Derron S. Vincik

DATE	BY	REV	REVISION

© 1999 Texas Department of Transportation

Brown & Root
HOUSTON, TEXAS

LOOP 20

MCPHERSON ROAD
CONTOUR GRADING PLAN

0 30 60
SCALE: 1"= 60'

SHEET 1 OF 1

FED RD DIV NO	STATE PROJECT NO		SHEET NO
6	C86-14-23		337
STATE	STATE DIST NO		COUNTY
TEXAS	22		WEBB
CONT	SECT	JOB	HIGHWAY NO
0086	14	023	LOOP 20

REF FILE(S): J01LOX01.BCK; BCK LV ON = 1-30
J01LOX01.EOP; EOP LV ON = 1-11,13-17,19-27,29-41,43-53,5
J01LOX01.ALG; ALG LV ON = 1-44
J01LOX01.BDR; BDR LV ON = 5,10,35,45,46,57,60-62

D04MRXO1.DGN-06 03-08-99 BAR_HO_ES05 \HCIVIL\CF0039\PHASE2

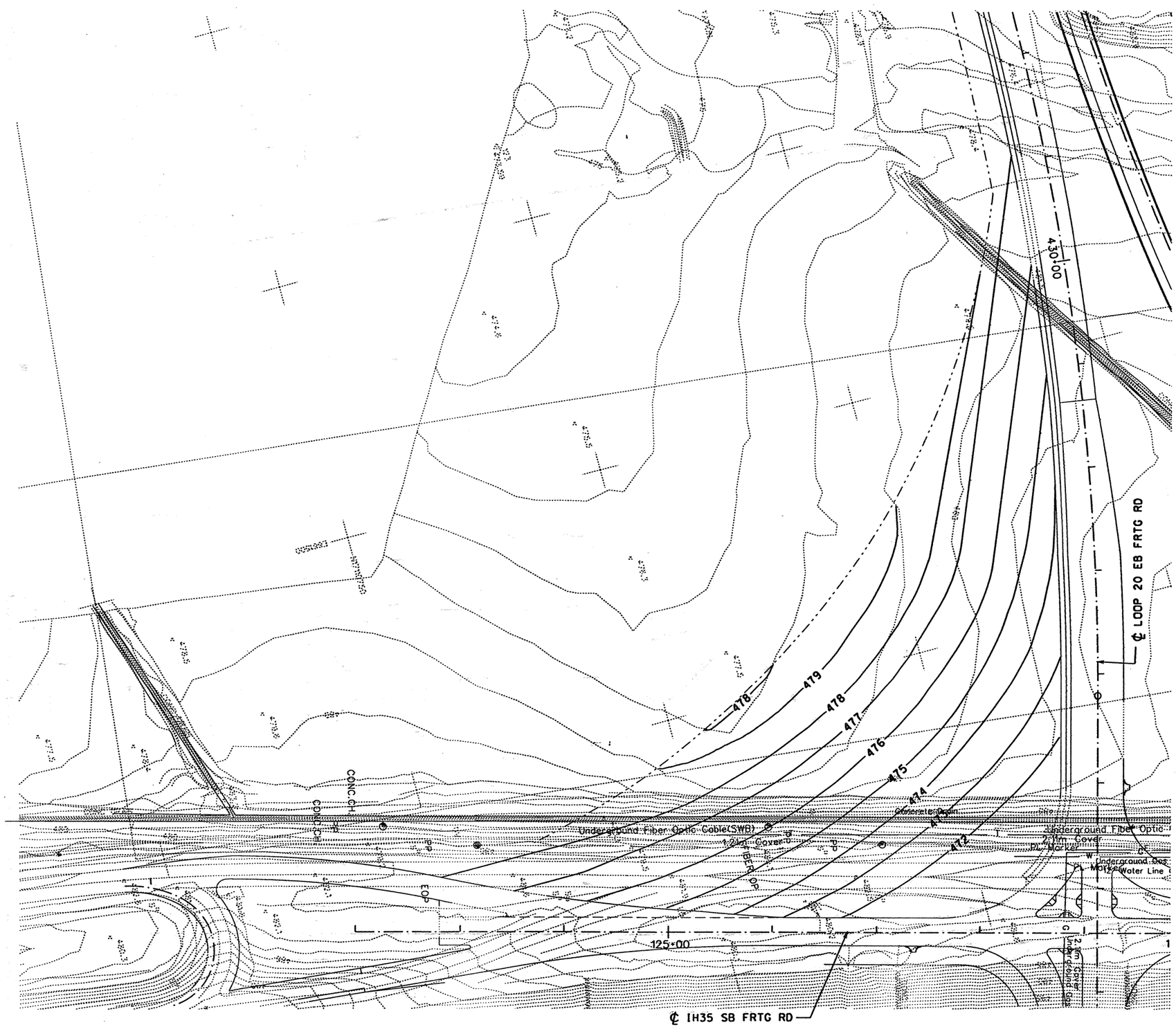

STATE OF TEXAS
SAMUEL M. WATSON
73121
REGISTERED PROFESSIONAL ENGINEER

The seal appearing on this document was authorized by Samuel M. Watson P.E. 73121, on April 2, 1999

DATE	BY	REV	REVISION

© 1999 Texas Department of Transportation

Brown & Root
HOUSTON, TEXAS

LOOP 20

GRADING PLAN

0 50 100
SCALE: 1"=100' HORZ

SHEET 1 OF 3

FED RD DIV NO	STATE PROJECT NO		SHEET NO
6	C86-14-23		340
STATE	STATE DIST NO	COUNTY	
TEXAS	22	WEBB	
CONT	SECT	JOB	HIGHWAY NO
0086	14	023	LOOP 20

D04LOX01.DGN-02 03-12-99 BAR_HO_ES05 \HCIVIL\CF0039\PHASE2

REF FILE(S): J01LOX01.BCK, BCK LV ON = 1-30
J01LOX01.EOP, EOP LV ON = 1-11,13-17,19-27,29-41,43-53,5
J01LOX01.EOP, ALG LV ON = 1-44
J01LOX01.BDR, BDR LV ON = 5,10,35,45,46,57,60-62

REF FILE(S): J01LOX01.UTI, UTI LV ON = 1-63
J01LOX01.ILL, ILL LV ON = 20
J01LOX01.FND, FND LV ON = 35
J01LOX01.DRN, DRN LV ON = 8

REF FILE(S): J01LOX01.BCK, BCK LV ON =
J01LOX01.EOP, EOP LV ON = 1-30
J01LOX01.EOP, ALG LV ON = 1-11,13-17,19-27,29-41,43-53.5
J01LOX01.BDR, BDR LV ON = 1-44
LV ON = 5,10,35,45,46,57,60-62

REF FILE(S): J01LOX01.UTI, UTI LV ON =
J01LOX01.ILL, ILL LV ON =
J01LOX01.FND, FND LV ON = 1-63
J01LOX01.DRN, DRN LV ON = 20
LV ON = 35
LV ON = 8

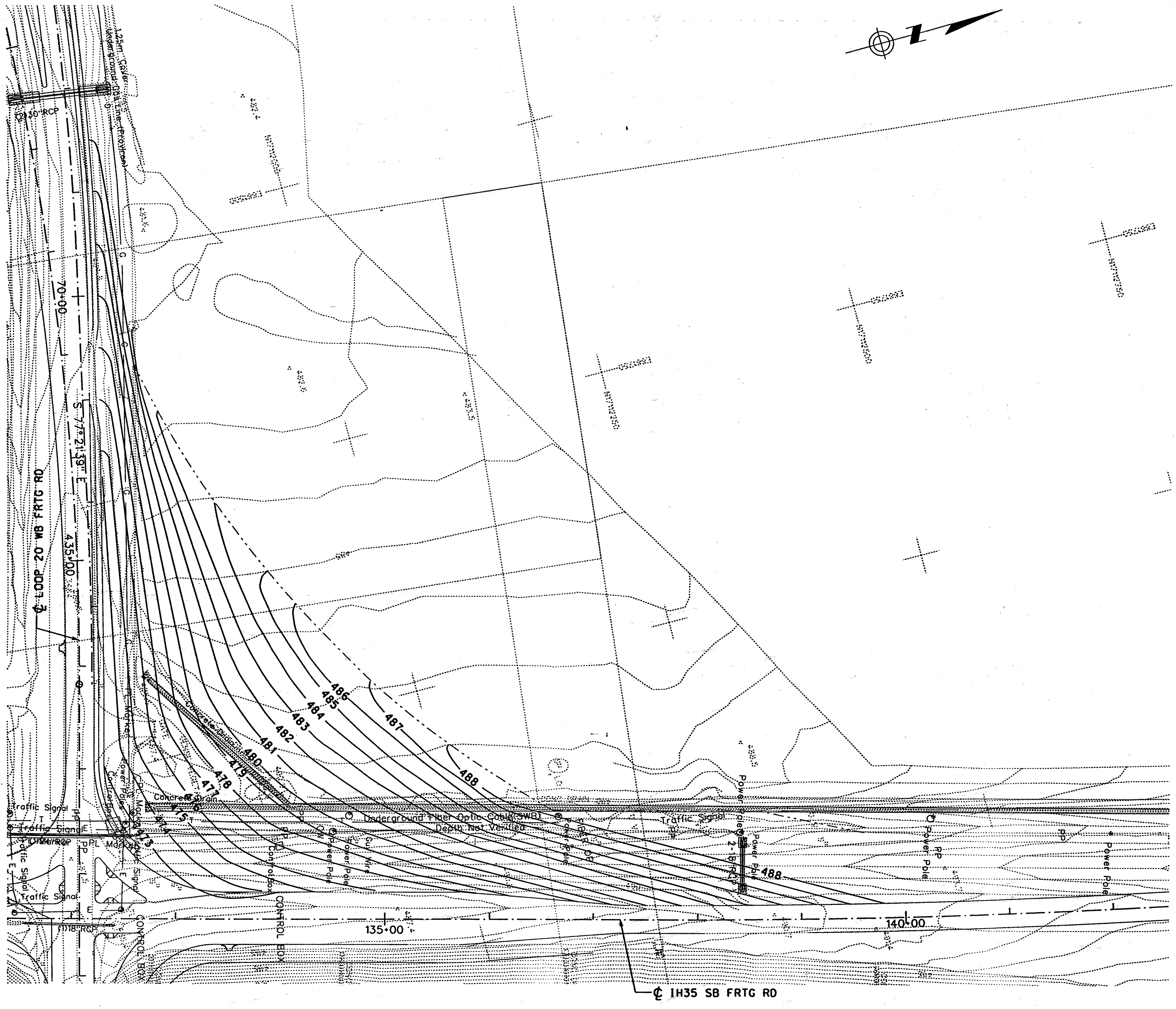

STATE OF TEXAS
SAMUEL M. WATSON
73121
REGISTERED
PROFESSIONAL ENGINEER

The seal appearing on this document was authorized by Samuel M. Watson P.E. 73121, on April 2, 1999

DATE	BY	REV	REVISION

© 1999 Texas Department of Transportation

Brown & Root
HOUSTON, TEXAS

LOOP 20

GRADING PLAN

0 50 100
SCALE: 1"=100' HORZ

SHEET 2 OF 3

FED RD DIV NO	STATE PROJECT NO		SHEET NO
6	C86-14-23		341
STATE	STATE DIST NO		COUNTY
TEXAS	22		WEBB
CONT	SECT	JOB	HIGHWAY NO
0086	14	023	LOOP 20

D04LOX02.DGN-02 03-12-99 BAR_HO_ES05 \HCIVIL\CF0039\PHASE2

REF FILE(S): J01LOX01.UTI, UTI LV ON = 1-63
J01LOX01.ILL, ILL LV ON = 20
J01LOX01.FND, FND LV ON = 35
J01LOX01.DRN, DRN LV ON = 8

REF FILE(S): J01LOX01.BCK, BCK LV ON = 1-30
J01LOX01.EOP, EOP LV ON = 1-11,13-17,19-27,29-41,43-53,5
J01LOX01.EOP, ALG LV ON = 1-44
J01LOX01.BDR, BDR LV ON = 5,10,35,45,46,57,60-62

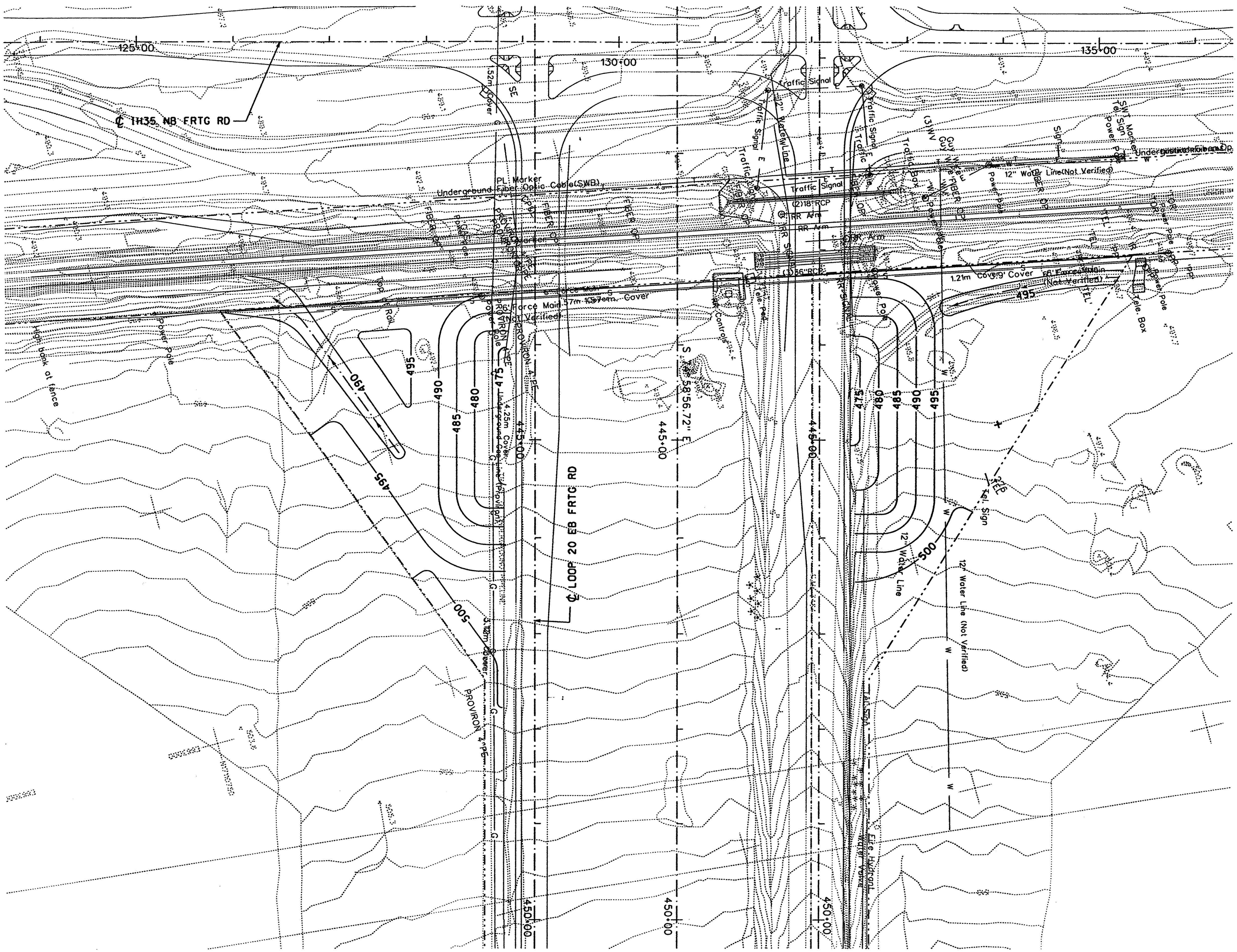

The seal appearing on this document was authorized by Samuel M. Watson P.E. 73121, on April 2, 1999

STATE OF TEXAS
SAMUEL M. WATSON
73121
REGISTERED PROFESSIONAL ENGINEER

DATE	BY	REV	REVISION

© 1999 Texas Department of Transportation

Brown & Root
HOUSTON, TEXAS

LOOP 20

GRADING PLAN

0 50 100
SCALE: 1"=100' HORZ

SHEET 3 OF 3

FED RD DIV NO	STATE PROJECT NO		SHEET NO
6	C86-14-23		342
STATE	STATE DIST NO	COUNTY	
TEXAS	22	WEBB	
CONT	SECT	JOB	HIGHWAY NO
0086	14	023	LOOP 20

D04LOX03.DGN-03 03-17-99 BAR_HO_ES05 \HCIVIL\CF0039\PHASE2

NOTES:

1. THE REFERENCE ELEVATIONS SHOWN IN TABLE II ARE APPROXIMATE AND ARE NOT INTENDED FOR THE FINAL GRADING OF THE "FUTURE ROADWAY".
2. THE PROPOSED EMBANK SHALL NOT INTERFERE OR ENCROACH UPON EXISTING DITCH #1 OR #2, AS SHOWN THIS SHEET.
3. REFER TO "LOOP 20 STORM SEWER/DITCH PLAN AND PROFILE" FOR PROPOSED DITCH LOCATION AND FLOW LINES.
4. THE EMBANKMENT MATERIAL SHALL BE OBTAINED FROM THE ADJACENT EXCAVATION AT THE LOOP 20/ IH 35 INTERSECTION.

LEGEND

EMBANK (DENS CONT) (TY D) (CL 3)

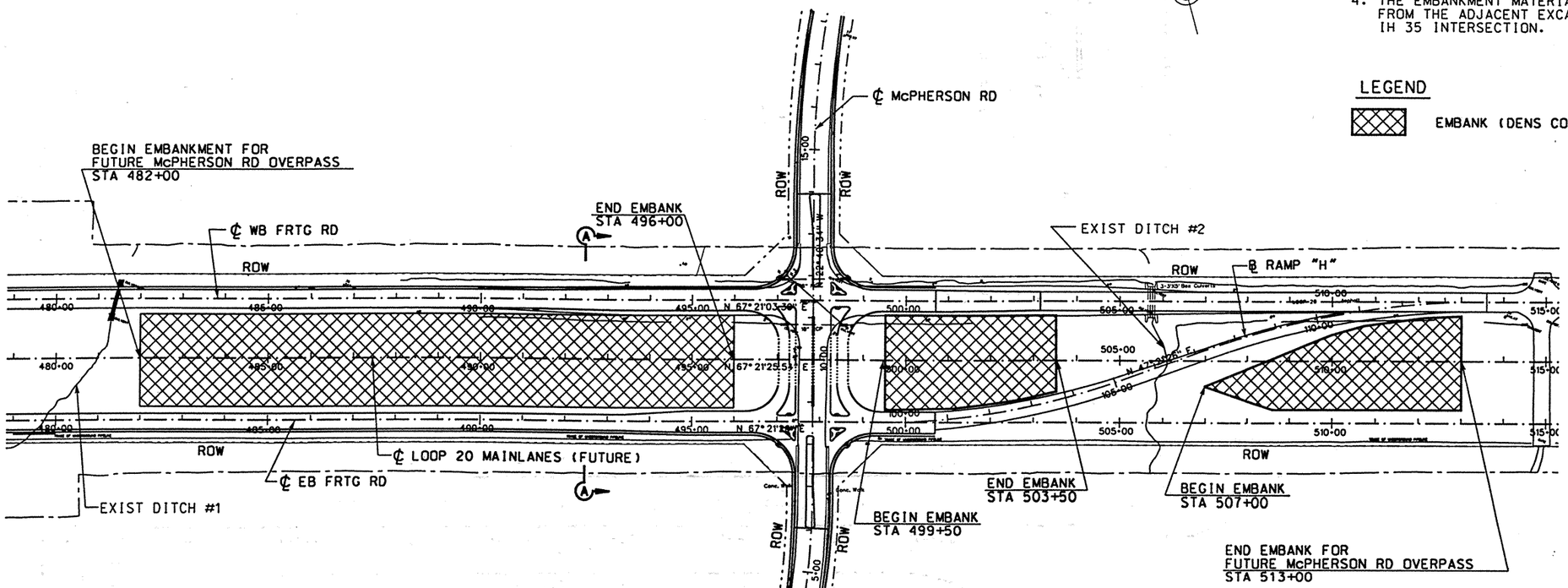

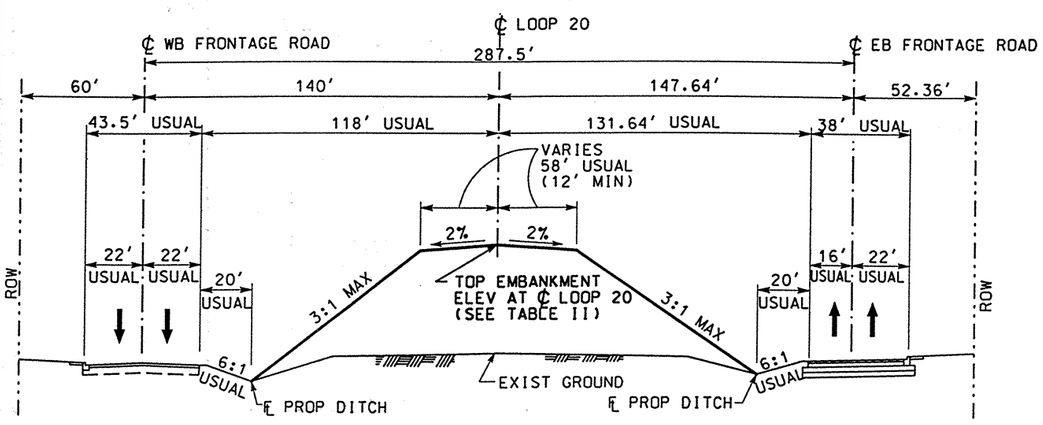

SECTION A-A
PROPOSED EMBANKMENT SECTION

NTS

STA 482+00 TO 496+00
STA 499+50 TO 503+50
STA 507+00 TO 513+00

TABLE I

ITEM	DESCRIPTION	QUANTITY
132-512	EMBANK (DENS CONT) (TY D) (CL 3) CY	161.987 CY

TABLE II
REFERENCE ELEVATIONS *

LOCATION (STA)	ELEV (FT)
℄ LOOP 20 STA 482+00	543.7
℄ LOOP 20 STA 484+00	548.1
℄ LOOP 20 STA 486+00	554.2
℄ LOOP 20 STA 490+00	566.1
℄ LOOP 20 STA 496+00	574.9
℄ LOOP 20 STA 499+50	575.0
℄ LOOP 20 STA 503+50	556.6
℄ LOOP 20 STA 510+00	552.9
℄ LOOP 20 STA 513+00	547.9

* THESE ARE "TOP OF EMBANKMENT ELEVATIONS" AS SHOWN IN SECTION A-A.

STATE OF TEXAS
DERRON S. VINCIK
84028
REGISTERED PROFESSIONAL ENGINEER

The seal appearing on this document was authorized by Derron S. Vincik P.E. 84028, on April 14, 1999.

Derron S. Vincik

DATE	BY	REV	REVISION

© 1999 Texas Department of Transportation

Brown & Root
HOUSTON, TEXAS

LOOP 20

EMBANKMENT
PLAN

0 150 300
SCALE: 1"=300'

SHEET 1 OF 1

FED RD DIV NO	STATE PROJECT NO	SHEET NO
6	C86-14-23	342A

STATE	STATE DIST NO	COUNTY
TEXAS	22	WEBB

CONT	SECT	JOB	HIGHWAY NO
0086	14	023	LOOP 20

REF FILE(S): J01LOX01.BDR. BDR LV ON = 5.45.57.60-63

D01CFX02.DGN-02 04-14-99 BAR_HO_ES05 \HCIVIL\CF0039\PHASE2

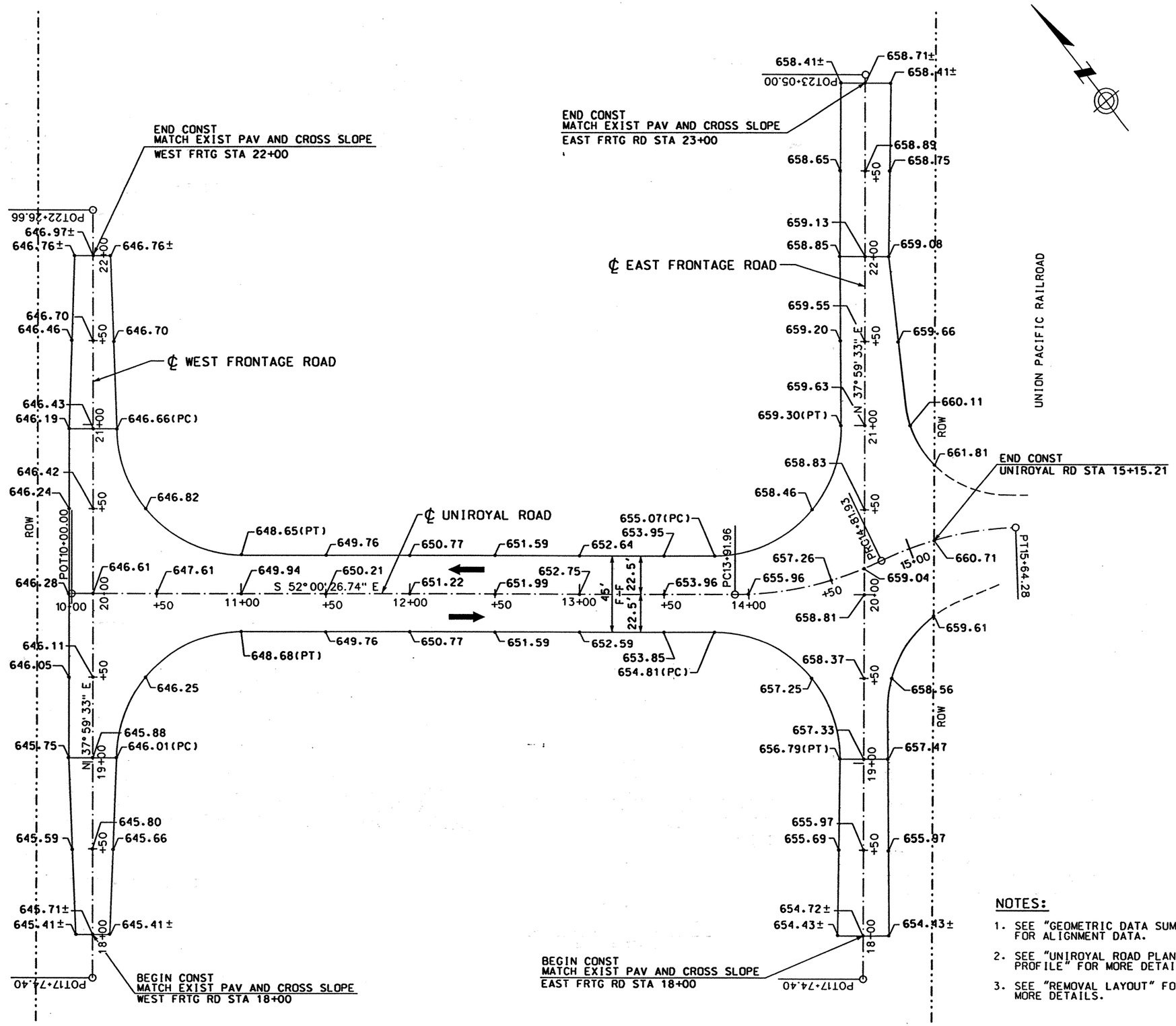

LEGEND:

- Ⓐ CONC PAV (CONT REINF HY STL)(12")
- Ⓑ ASPH CONC PAV (TY A)(4")
- Ⓒ LIME TREATED SUBGRADE (8")
- Ⓓ SINGLE SLOPE CONCRETE BARRIER (SSCB) (TYPE 2)
- Ⓔ TYPE II MONO CURB (6")
- Ⓕ CELL FIBER MULCH SEED (PERM) (RURAL)(CLAY)
- Ⓖ CLASS B RIPRAP (4")
- Ⓗ CONC SIDEWALK (4")
- Ⓘ CONC MEDIAN (6")
- Ⓙ SINGLE SLOPE TRAFFIC RAIL(SSTR) w/ DRAIN SLOTS
- Ⓚ RETAINING WALL
- Ⓛ METAL BEAM GUARD FENCE
- Ⓜ BRICK PAVERS
- Ⓝ REMOVE ASPH CONC PAV
- Ⓞ REMOVE CONC PAV
- Ⓟ TYPE II CURB AND GUTTER (6")
- Ⓠ CONCRETE DRIVEWAYS (6")
- Ⓡ ASPH CONC PAV (TY D)(2")
- Ⓢ ASPH CONC PAV (TY A)(8")
- Ⓣ PLANE ASPH CONC PAV (0 - 1")
- Ⓤ SINGLE SLOPE TRAFFIC RAIL (SSTR)
- Ⓥ CHAINLINK FENCE (6')
- Ⓦ ROADWAY UNDERDRAIN
- Ⓧ WHEELCHAIR RAMP TYPE B

NOTES:

1. SEE "GEOMETRIC DATA SUMMARY" FOR ALIGNMENT DATA.
2. SEE "UNIROYAL ROAD PLAN AND PROFILE" FOR MORE DETAILS.
3. SEE "REMOVAL LAYOUT" FOR MORE DETAILS.

STATE OF TEXAS
DERRON S. VINCIK
84028
REGISTERED PROFESSIONAL ENGINEER

The seal appearing on this document was authorized by Derron S. Vincik P.E. 84028, on April 2, 1999.

Derron S. Vincik

DATE	BY	REV	REVISION

© 1999 Texas Department of Transportation

Brown & Root
HOUSTON, TEXAS

IH 35

UNIROYAL ROAD
INTERSECTION
GRADING PLAN

0 50 100
1" =60'

SHEET 1 OF 1

FED RD DIV NO	STATE PROJECT NO		SHEET NO
6	NH-99(462)		34B
STATE	STATE DIST NO	COUNTY	
TEXAS	22	WEBB	
CONT	SECT	JOB	HIGHWAY NO
0018	05	057	IH 35

D03URX02.DGN-04 04-02-99 BAR_HO_ES05 \HCIVIL\CF0039\PHASE2

REF FILE(S): J01LOX01.PRO, PRO LV ON = 1-63
J01LOX01.UTI, UTI LV ON = 1-63
J01LOX01.ILL, ILL LV ON = 20
J01LOX01.FND, FND LV ON = 35
J01LOX01.DRN, DRN LV ON = 8

REF FILE(S): J01LOX01.BCK, BCK LV ON = 1-30
J01LOX01.EOP, EOP LV ON = 1-11,13-17,19-27,29-41,43-53,5
J01LOX01.EOP, ALG LV ON = 1-44
J01LOX01.BDR, BDR LV ON = 5,10,35,45,46,57,60-62

NOTE:

STATION ARE ALONG ℄ LOOP 20 UNLESS OTHERWISE NOTED.

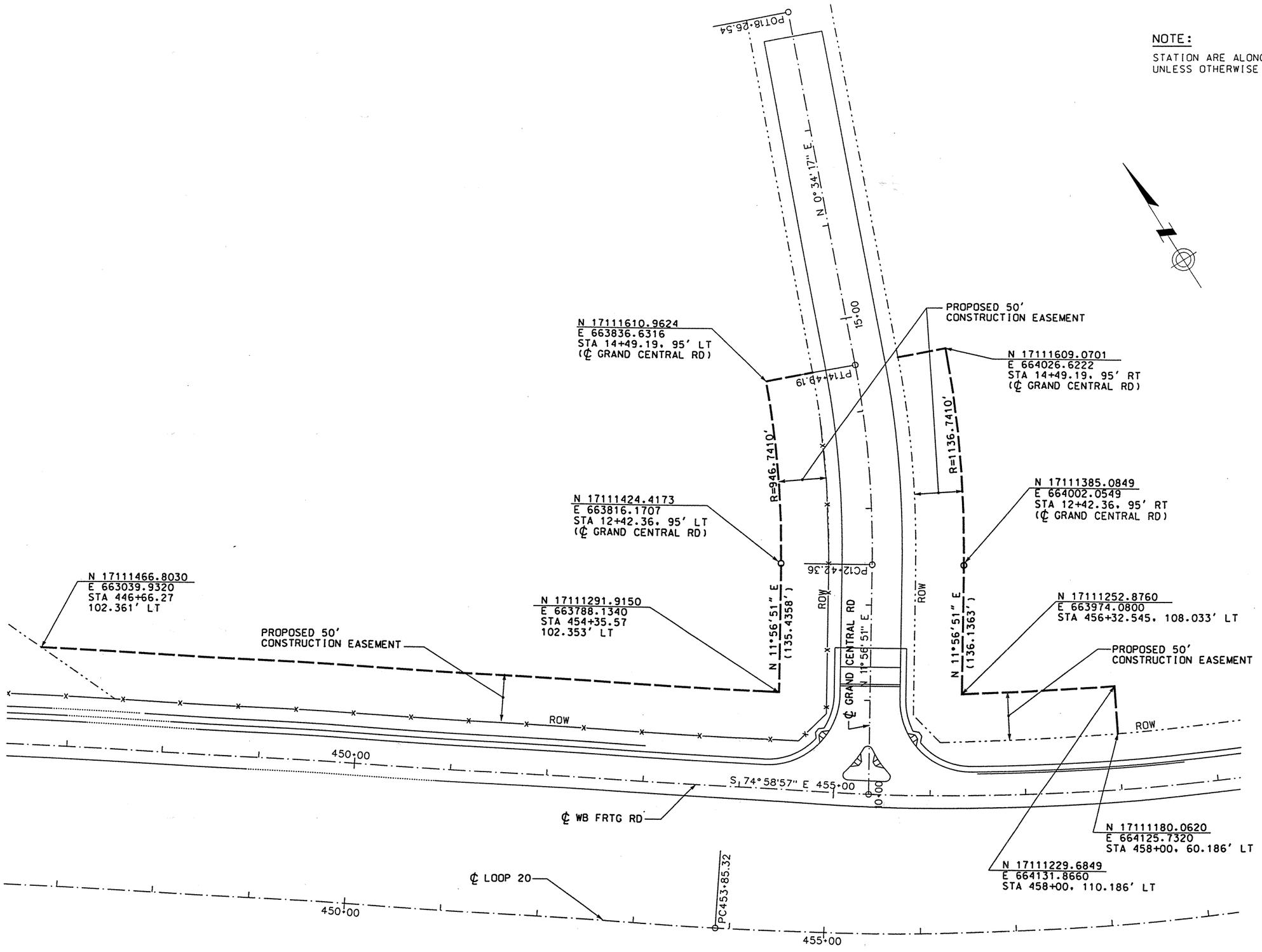

REV. 6-25-99

REF FILE(S): J01LOX01.EOP, EOP LV ON = 1-11,13-17,19-27,29-41,43-53,5
J01LOX01.ALG, ALG LV ON = 1-44
J01LOX01.BDR, BDR LV ON = 5,10,35,45,46,57,60-62

STATE OF TEXAS
CHARLES M. SHINE
62999
REGISTERED PROFESSIONAL ENGINEER

The seal appearing on this document was authorized by Charles Shine P.E. 62999, on June 7, 1999

DATE	BY	REV	REVISION

© 1999 Texas Department of Transportation

Brown & Root
HOUSTON, TEXAS

LOOP 20
GRAND CENTRAL RD

CONSTRUCTION EASEMENT LAYOUT

0 50 100
SCALE: 1"=100' HORZ

SHEET 1 OF 1

FED RD DIV NO	STATE PROJECT NO		SHEET NO
6	C86-14-23		344
STATE	STATE DIST NO		COUNTY
TEXAS	22		WEBB
CONT	SECT	JOB	HIGHWAY NO
0086	14	023	LOOP 20

D03CCX02.DGN-04 05-28-99 BAR_HO_ES05 \HCIVIL\CF0039\PHASE2

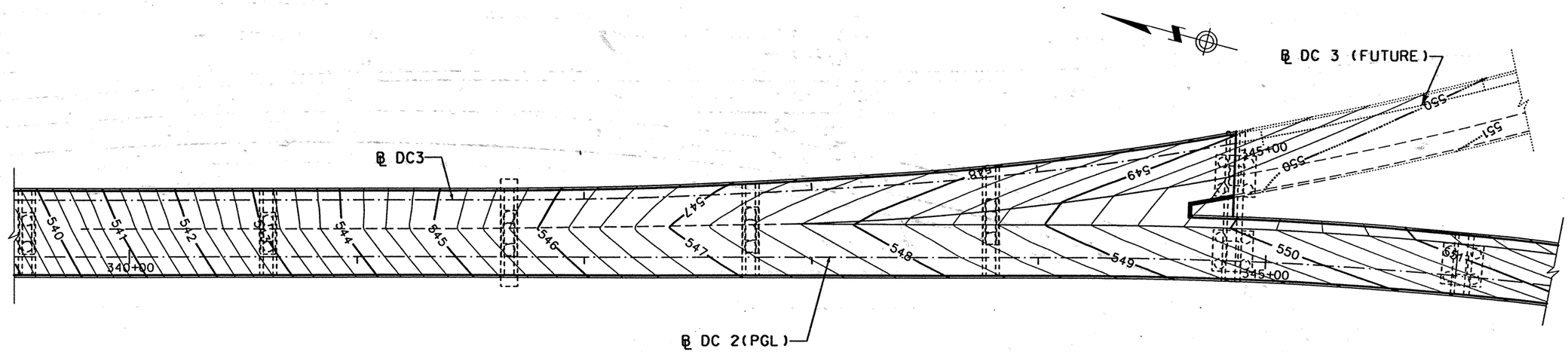

PLAN
DC2 & DC3 (FUTURE)
SCALE: 1"=50'

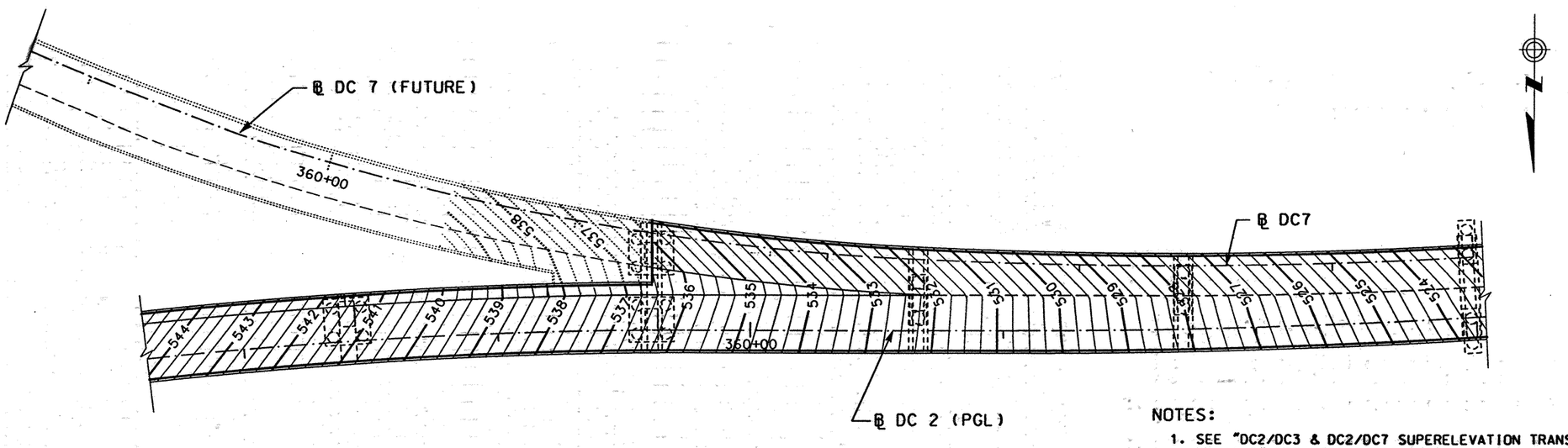

PLAN
DC2 & DC7 (FUTURE)
SCALE: 1"=50'

NOTES:

1. SEE "DC2/DC3 & DC2/DC7 SUPERELEVATION TRANSITION DETAILS" FOR MORE INFORMATION.

STATE OF TEXAS
DERRON S. VINCIK
84028
REGISTERED PROFESSIONAL ENGINEER

The seal appearing on this document was authorized by Derron S. Vincik P.E. 84028, on April 2, 1999.

Derron S. Vincik

DATE	BY	REV	REVISION

© 1999 Texas Department of Transportation

Brown & Root
HOUSTON, TEXAS

LOOP 20

DIRECT CONNECTOR 2 / DIRECT CONNECTOR 3
AND
DIRECT CONNECTOR 2 / DIRECT CONNECTOR 7
CONTOUR GRADING PLAN

0 25 50
SCALE: 1" = 50'

SHEET 1 OF 1

FED RD DIV NO	STATE PROJECT NO		SHEET NO.
6	C86-14-23		345
STATE	STATE DIST NO		COUNTY
TEXAS	22		WEBB
CONT	SECT	JOB	HIGHWAY NO
0086	14	023	LOOP 20

REF FILE(S): J01LOX01.ALG, ALG LV ON = 1-8,10-39,45-63
J01LOX01.BDR, BDR LV ON = 45,52,57,59-62

D04C1X02.DGN-04 04-02-99 BAR_HO_ES05 \HCIVIL\CF0039\PHASE2

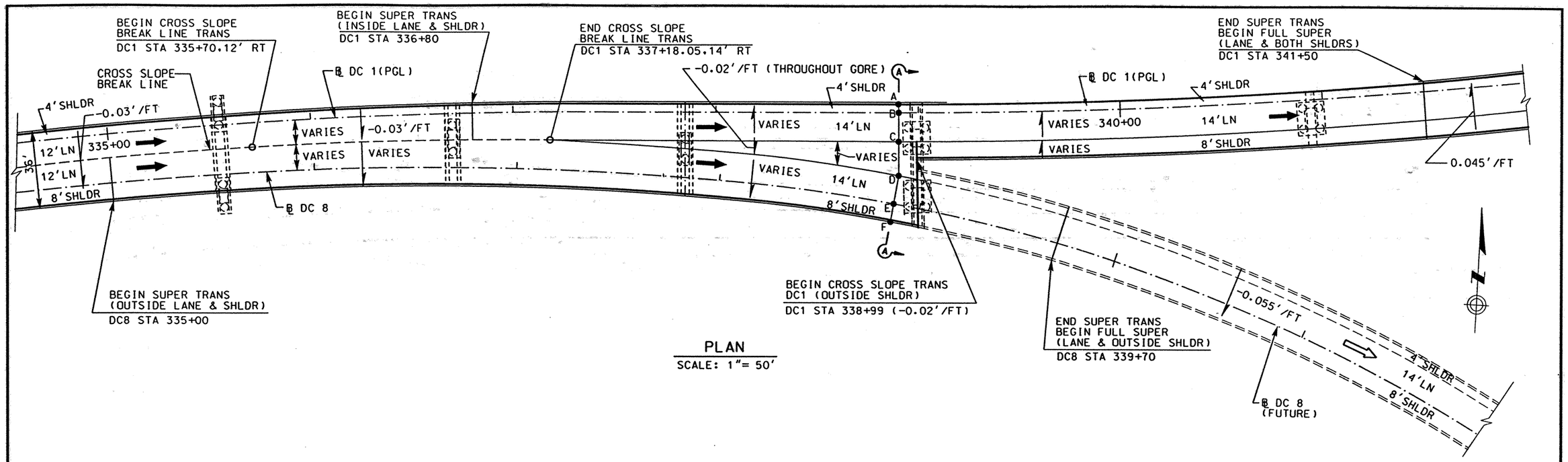

PLAN

SCALE: 1"= 50'

SUPERELEVATION TRANSITION TABLE

DC 1 Station	Cross Slope "A"To"C" (Ft/Ft)	Elev @ Pt "A"	Elev @ Pt "B" (PGL)	Elev @ Pt "C"	Cross Slope "C"To"D" (Ft/Ft)	Elev @ Break Pt Pt"D"	Break Pt "D" Station (DC 8 Sta)	Cross Slope "D"to"F" (Ft/Ft)	Elev @ Pt "E" BL DC 8	Elev @ Pt "F"
335+10.000	-0.0300	533.197	533.047	532.687	-0.020	532.687	335+10.200	-0.0306	532.320	532.044
335+30.000	-0.0300	534.067	533.917	533.557	-0.020	533.557	335+30.020	-0.0316	533.178	532.893
335+50.000	-0.0300	534.937	534.787	534.427	-0.020	534.427	335+49.790	-0.0327	534.033	533.739
335+70.000	-0.0300	535.807	535.657	535.297	-0.020	535.297	335+69.560	-0.0337	534.887	534.584
335+90.000	-0.0300	536.677	536.527	536.159	-0.020	536.159	335+89.320	-0.0348	535.737	535.424
336+10.000	-0.0300	537.547	537.397	537.021	-0.020	537.021	336+09.090	-0.0359	536.584	536.261
336+30.000	-0.0300	538.417	538.267	537.883	-0.020	537.883	336+28.840	-0.0369	537.429	537.097
336+50.000	-0.0300	539.287	539.137	538.745	-0.020	538.745	336+48.600	-0.0380	538.268	537.926
336+70.000	-0.0300	540.157	540.007	539.607	-0.020	539.607	336+68.350	-0.0390	539.105	538.754
336+90.000	-0.0285	541.020	540.877	540.505	-0.020	540.505	336+88.090	-0.0401	539.973	539.612
337+10.000	-0.0253	541.875	541.748	541.397	-0.020	541.397	337+07.820	-0.0411	540.831	540.461
337+18.050	-0.0240	542.218	542.098	541.762	-0.020	541.762	337+15.760	-0.0415	541.181	540.808
337+20.000	-0.0237	542.302	542.183	541.851	-0.020	541.850	337+17.680	-0.0416	541.267	540.893
337+30.000	-0.0221	542.729	542.618	542.309	-0.020	542.296	337+27.530	-0.0422	541.705	541.325
337+40.000	-0.0205	543.156	543.053	542.766	-0.020	542.746	337+37.430	-0.0427	542.148	541.764
337+50.000	-0.0189	543.583	543.488	543.223	-0.020	543.193	337+47.340	-0.0432	542.589	542.200
337+60.000	-0.0173	544.010	543.923	543.681	-0.020	543.640	337+57.270	-0.0437	543.028	542.635
337+70.000	-0.0157	544.437	544.358	544.138	-0.020	544.085	337+67.210	-0.0443	543.464	543.066
337+80.000	-0.0141	544.864	544.793	544.596	-0.020	544.528	337+77.140	-0.0448	543.901	543.498
337+90.000	-0.0125	545.291	545.228	545.053	-0.020	544.971	337+86.960	-0.0453	544.337	543.929
338+00.000	-0.0109	545.718	545.663	545.510	-0.020	545.412	337+97.030	-0.0458	544.771	544.359
338+10.000	-0.0093	546.145	546.098	545.968	-0.020	545.852	338+06.990	-0.0464	545.203	544.785
338+20.000	-0.0077	546.572	546.533	546.425	-0.020	546.291	338+16.930	-0.0469	545.634	545.212
338+30.000	-0.0061	546.999	546.968	546.883	-0.020	546.728	338+26.810	-0.0474	546.064	545.637
338+40.000	-0.0045	547.426	547.403	547.340	-0.020	547.162	338+36.710	-0.0480	546.490	546.058
338+50.000	-0.0029	547.853	547.838	547.797	-0.020	547.594	338+46.620	-0.0485	546.915	546.478
338+60.000	-0.0013	548.280	548.273	548.255	-0.020	548.023	338+56.550	-0.0490	547.337	546.896
338+70.000	0.0004	548.706	548.708	548.714	-0.020	548.452	338+66.490	-0.0495	547.759	547.313
338+75.000	0.0012	548.920	548.926	548.943	-0.020	548.665	338+71.470	-0.0498	547.967	547.519
338+80.000	0.0020	549.133	549.143	549.171	-0.020	548.876	338+76.460	-0.0501	548.175	547.724
338+85.000	0.0028	549.347	549.361	549.400	-0.020	549.088	338+81.450	-0.0503	548.384	547.931
338+90.000	0.0036	549.560	549.578	549.628	-0.020	549.298	338+86.450	-0.0506	548.590	548.134
338+95.000	0.0044	549.774	549.796	549.858	-0.020	549.508	338+91.490	-0.0509	548.796	548.338
338+99.000	0.0050	549.945	549.970	550.040	-0.020	549.675	338+95.540	-0.0511	548.959	548.500
339+01.740	0.0054	550.062	550.089	550.165	-0.020	549.788	338+98.320	-0.0512	549.072	548.611

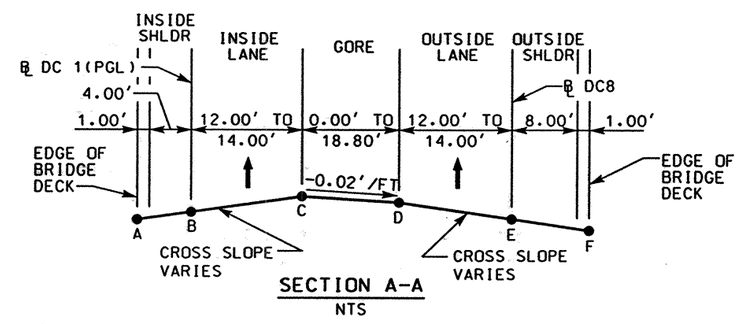

SECTION A-A

NTS

NOTES:

1. ALL ELEVATIONS ALONG SECTION A-A ARE DEPENDENT UPON POINT "B" (DC 1 PGL). THE CROSS SLOPE OF THE INSIDE LANE AND INSIDE SHOULDER ROTATE ABOUT POINT "B" (℄ DC 1 (PGL)). THE CROSS SLOPE THROUGHOUT THE GORE IS -0.02 '/FT (NORMAL TO DC 1 ℄). THE CROSS SLOPE OF THE OUTSIDE LANE AND OUTSIDE SHOULDER IS DETERMINED BY THE "DC 8 SUPERELEVATION TRANSITION" AND ROTATES ABOUT POINT "D" (THE CROSS SLOPE BREAK-LINE).
2. SEE "DIRECT CONNECTOR 1 PLAN & PROFILE" FOR MORE INFORMATION
3. SEE "DIRECT CONNECTOR 1 BRIDGE LAYOUT" FOR BRIDGE DETAILS.

STATE OF TEXAS
DERRON S. VINCIK
84028
REGISTERED PROFESSIONAL ENGINEER

The seal appearing on this document was authorized by Derron S. Vincik P.E. 84028, on April 2, 1999.

Derron S. Vincik

DATE	BY	REV	REVISION

© 1999 Texas Department of Transportation

Brown & Root
HOUSTON, TEXAS

IH 35

SUPERELEVATION TRANSITION DETAIL

DIRECT CONNECTOR 1 / DIRECT CONNECTOR 8

SHEET 1 OF 4

FED RD DIV NO	STATE PROJECT NO	SHEET NO
6	NH-99(462)	34b

STATE	STATE DIST NO	COUNTY
TEXAS	22	WEBB

CONT	SECT	JOB	HIGHWAY NO
0018	06	131	IH 35

REF FILE(S): J01LOX01.ALG, ALG LV ON = 1-8.10-39.45-63
J01LOX01.BDR, BDR LV ON = 45.52.57.59-62

D03SEX01.DGN-09 02-23-99 BAR_HO_ES05 \HCIVIL\CF0039\PHASE2

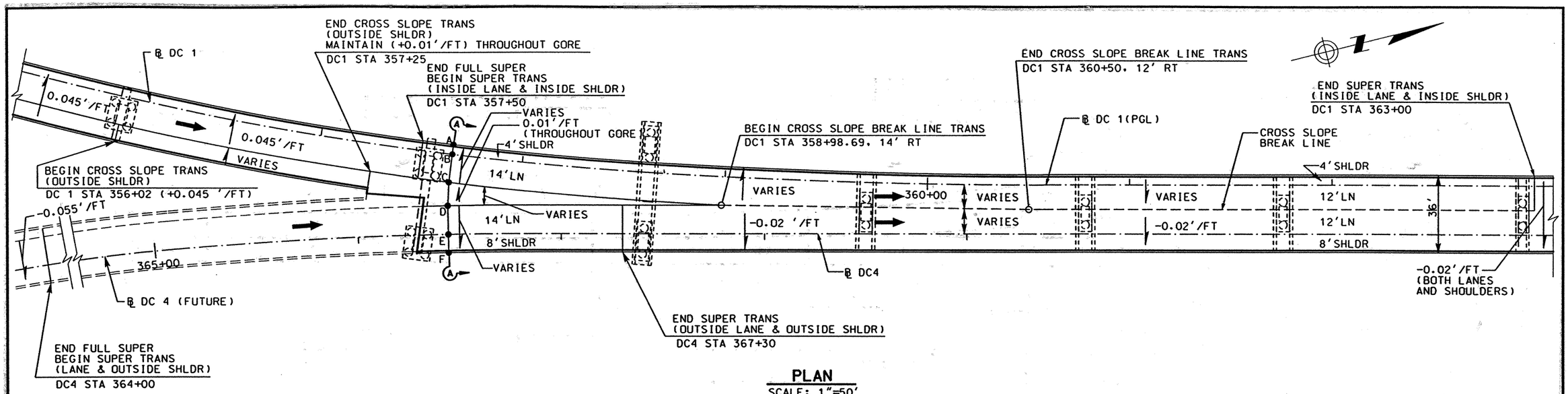

PLAN

SCALE: 1"=50'

SUPERELEVATION TRANSITION TABLE

DC 1 Station	Cross Slope "A"To"C" (Ft/Ft)	Elev @ Pt "A"	Elev @ Pt "B" (PGL)	Elev @ Pt "C"	Cross Slope "C"To"D" (Ft/Ft)	Elev @ Break Pt Pt"D"	Break Pt "D" Station (DC 4 Sta)	Cross Slope "D"to"F" (Ft/Ft)	Elev @ Pt "E" BL DC 4	Elev @ Pt "F"
357+51.830	0.0448	562.773	562.997	563.624	0.010	563.761	366+29.780	-0.0307	563.331	563.055
357+55.000	0.0445	562.616	562.838	563.461	0.010	563.593	366+33.020	-0.0303	563.169	562.896
357+60.000	0.0439	562.369	562.588	563.203	0.010	563.327	366+38.130	-0.0298	562.909	562.641
357+65.000	0.0433	562.122	562.338	562.944	0.010	563.061	366+43.240	-0.0293	562.650	562.387
357+70.000	0.0427	561.875	562.088	562.686	0.010	562.795	366+48.340	-0.0287	562.393	562.135
357+75.000	0.0421	561.628	561.838	562.427	0.010	562.530	366+53.430	-0.0282	562.135	561.881
357+80.000	0.0415	561.381	561.588	562.169	0.010	562.265	366+58.510	-0.0276	561.878	561.630
357+90.000	0.0403	560.887	561.088	561.652	0.010	561.735	366+68.670	-0.0266	561.363	561.124
358+00.000	0.0391	560.393	560.588	561.135	0.010	561.208	366+78.800	-0.0255	560.851	560.621
358+20.000	0.0368	559.404	559.588	560.103	0.010	560.156	366+99.140	-0.0233	559.830	559.620
358+40.000	0.0344	558.416	558.588	559.070	0.010	559.106	367+19.450	-0.0212	558.809	558.618
358+60.000	0.0320	557.428	557.588	558.036	0.010	558.058	367+39.720	-0.0200	557.778	557.598
358+80.000	0.0297	556.440	556.588	557.004	0.010	557.014	367+59.850	-0.0200	556.734	556.554
358+98.690	0.0275	555.517	555.654	556.039	0.010	556.039	367+78.660	-0.0200	555.759	555.579
359+00.000	0.0273	555.452	555.588	555.970	0.010	555.970	367+79.970	-0.0200	555.691	555.511
359+20.000	0.0250	554.464	554.589	554.931	0.010	554.931	368+00.050	-0.0200	554.665	554.485
359+40.000	0.0226	553.476	553.589	553.892	0.010	553.892	368+20.130	-0.0200	553.636	553.456
359+60.000	0.0202	552.488	552.589	552.854	0.010	552.854	368+40.220	-0.0200	552.606	552.426
359+80.000	0.0179	551.500	551.589	551.818	0.010	551.818	368+60.300	-0.0200	551.575	551.395
360+00.000	0.0155	550.512	550.589	550.783	0.010	550.783	368+80.380	-0.0200	550.543	550.363
360+20.000	0.0131	549.524	549.589	549.749	0.010	549.749	369+00.460	-0.0200	549.509	549.329
360+40.000	0.0108	548.535	548.589	548.719	0.010	548.719	369+20.540	-0.0200	548.479	548.299
360+60.000	0.0084	547.547	547.589	547.690	0.010	547.690		-0.0200	547.450	547.270
360+80.000	0.0060	546.559	546.589	546.661	0.010	546.661		-0.0200	546.421	546.241
361+00.000	0.0037	545.571	545.589	545.633	0.010	545.633		-0.0200	545.393	545.213
361+20.000	0.0013	544.583	544.589	544.605	0.010	544.605		-0.0200	544.365	544.185
361+40.000	-0.0011	543.595	543.589	543.576	0.010	543.576		-0.0200	543.336	543.156
361+60.000	-0.0035	542.607	542.589	542.547	0.010	542.547		-0.0200	542.307	542.127
361+80.000	-0.0059	541.619	541.589	541.518	0.010	541.518		-0.0200	541.278	541.098
362+00.000	-0.0082	540.630	540.589	540.491	0.010	540.491		-0.0200	540.251	540.071
362+20.000	-0.0106	539.642	539.589	539.462	0.010	539.462		-0.0200	539.222	539.042
362+40.000	-0.0130	538.654	538.589	538.433	0.010	538.433		-0.0200	538.193	538.013
362+60.000	-0.0153	537.666	537.589	537.405	0.010	537.405		-0.0200	537.165	536.985
362+80.000	-0.0177	536.678	536.589	536.377	0.010	536.377		-0.0200	536.137	535.957
363+00.000	-0.0200	535.689	535.589	535.349	0.010	535.349		-0.0200	535.109	534.929
363+20.000	-0.0200	534.689	534.589	534.349	0.010	534.349		-0.0200	534.109	533.929

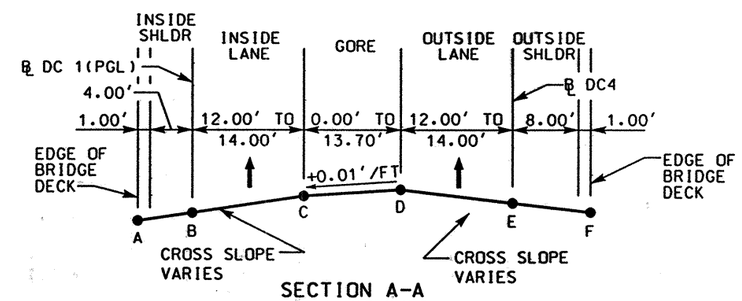

SECTION A-A

NTS

NOTES:

1. ALL ELEVATIONS ALONG SECTION A-A ARE DEPENDENT UPON POINT "B" (DC 1 PGL). THE CROSS SLOPE OF THE INSIDE LANE AND INSIDE SHOULDER ROTATE ABOUT POINT "B" (℄ DC 1 (PGL)). THE CROSS SLOPE THROUGHOUT THE GORE IS +0.01'/FT (NORMAL TO DC 1 ℄). THE CROSS SLOPE OF THE OUTSIDE LANE AND OUTSIDE SHOULDER IS DETERMINED BY THE "DC 4 SUPERELEVATION TRANSITION" AND ROTATES ABOUT POINT "D" (THE CROSS SLOPE BREAK-LINE).
2. SEE "DIRECT CONNECTOR 1 PLAN & PROFILE" FOR MORE INFORMATION
3. SEE "DIRECT CONNECTOR 1 BRIDGE LAYOUT" FOR BRIDGE DETAILS.

STATE OF TEXAS
DERRON S. VINCIK
P.E. 84028
REGISTERED PROFESSIONAL ENGINEER

The seal appearing on this document was authorized by Derron S. Vincik P.E. 84028, on April 2, 1999.

DATE	BY	REV	REVISION

© 1999 Texas Department of Transportation

Brown & Root
HOUSTON, TEXAS

IH 35

SUPERELEVATION TRANSITION DETAIL

DIRECT CONNECTOR 1 / DIRECT CONNECTOR 4

SHEET 2 OF 4

FED RD DIV NO	STATE PROJECT NO		SHEET NO
6	NH-99(462)		347
STATE	STATE DIST NO	COUNTY	
TEXAS	22	WEBB	
CONT	SECT	JOB	HIGHWAY NO
0018	06	131	IH 35

REF FILE(S): J01LOX01.BDR, BDR LV ON = 45:52,57:59-62

D03SEX02.DGN-09 02-23-99 BAR_HO_ES05 \HCIVIL\CF0039\PHASE2

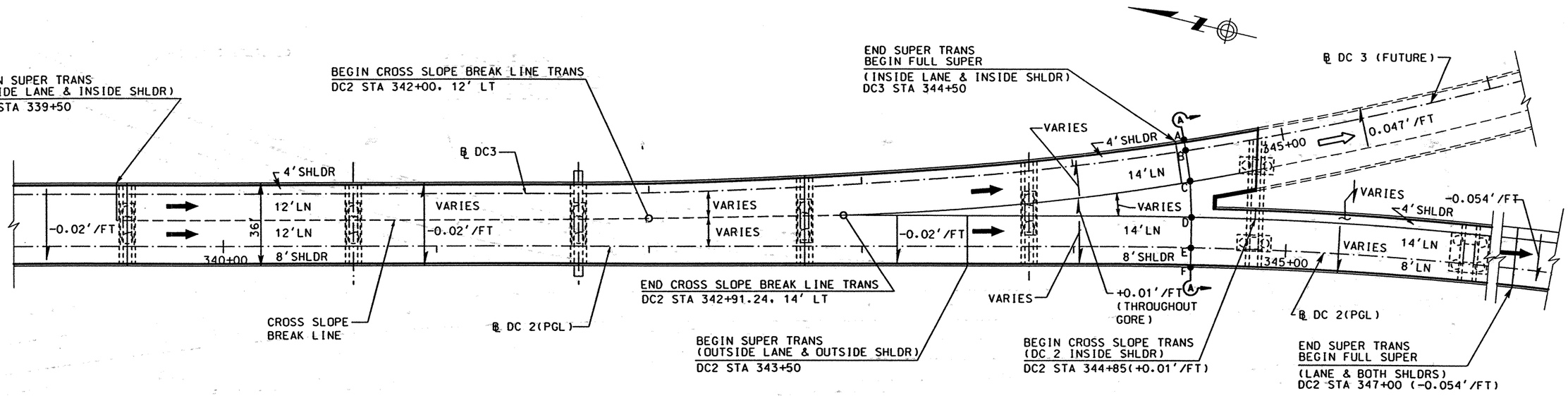

PLAN
SCALE: 1"=50'

SUPERELEVATION TRANSITION TABLE

DC 2 Station	Cross Slope "D"To"F" (Ft/Ft)	Elev @ Pt "F"	Elev @ Pt "E" (PGL)	Elev @ Pt "D"	Cross Slope "D"To"C" (Ft/Ft)	Elev @ Break Pt Pt"C"	Break Pt "C" Station (DC 3 Sta)	Cross Slope "A"to"C" (Ft/Ft)	Elev @ Pt "B" BL DC 3	Elev @ Pt "A"
339+50.000	-0.0200	538.914	539.094	539.334	-0.0100	539.334	339+50.000	0.0200	539.574	539.674
339+70.000	-0.0200	539.668	539.848	540.088	-0.0100	540.088	339+70.000	0.0174	540.297	540.384
339+90.000	-0.0200	540.390	540.570	540.810	-0.0100	540.810	339+90.000	0.0147	540.986	541.060
340+10.000	-0.0200	541.078	541.258	541.498	-0.0100	541.498	340+10.000	0.0120	541.642	541.702
340+30.000	-0.0200	541.733	541.913	542.153	-0.0100	542.153	340+30.000	0.0093	542.265	542.311
340+50.000	-0.0200	542.355	542.535	542.775	-0.0100	542.775	340+50.000	0.0066	542.854	542.887
340+70.000	-0.0200	542.944	543.124	543.364	-0.0100	543.364	340+70.000	0.0040	543.412	543.432
340+90.000	-0.0200	543.500	543.680	543.920	-0.0100	543.920	340+90.000	0.0013	543.936	543.942
341+10.000	-0.0200	544.022	544.202	544.442	-0.0100	544.442	341+10.000	-0.0015	544.424	544.417
341+30.000	-0.0200	544.512	544.692	544.932	-0.0100	544.932	341+30.000	-0.0042	544.882	544.861
341+50.000	-0.0200	544.968	545.148	545.388	-0.0100	545.388	341+49.980	-0.0068	545.306	545.272
341+70.000	-0.0200	545.391	545.571	545.811	-0.0100	545.811	341+69.890	-0.0095	545.696	545.648
341+90.000	-0.0200	545.780	545.960	546.200	-0.0100	546.200	341+89.800	-0.0122	546.049	545.988
342+10.000	-0.0200	546.137	546.317	546.561	-0.0100	546.561	342+09.710	-0.0149	546.374	546.299
342+30.000	-0.0200	546.460	546.640	546.893	-0.0100	546.893	342+29.620	-0.0175	546.671	546.583
342+50.000	-0.0200	546.750	546.930	547.192	-0.0100	547.192	342+49.540	-0.0202	546.930	546.829
342+70.000	-0.0200	547.007	547.187	547.458	-0.0100	547.458	342+69.440	-0.0229	547.151	547.037
342+90.000	-0.0200	547.233	547.413	547.692	-0.0100	547.692	342+89.340	-0.0255	547.337	547.210
342+91.240	-0.0200	547.247	547.427	547.707	-0.0100	547.707	342+90.570	-0.0257	547.348	547.219
343+10.000	-0.0200	547.453	547.633	547.913	-0.0100	547.903	343+09.270	-0.0282	547.508	547.367
343+30.000	-0.0200	547.672	547.852	548.132	-0.0100	548.109	343+29.210	-0.0309	547.676	547.522
343+50.000	-0.0200	547.891	548.071	548.351	-0.0100	548.314	343+49.140	-0.0335	547.845	547.677
343+70.000	-0.0220	548.092	548.290	548.598	-0.0100	548.544	343+69.010	-0.0362	548.037	547.856
343+90.000	-0.0239	548.295	548.510	548.845	-0.0100	548.771	343+88.910	-0.0389	548.227	548.032
344+10.000	-0.0259	548.496	548.729	549.092	-0.0100	548.996	344+08.840	-0.0415	548.415	548.208
344+30.000	-0.0278	548.698	548.948	549.337	-0.0100	549.215	344+29.030	-0.0442	548.597	548.376
344+40.000	-0.0288	548.799	549.058	549.461	-0.0100	549.324	344+39.170	-0.0456	548.686	548.458
344+50.000	-0.0298	548.900	549.168	549.585	-0.0100	549.432	344+49.350	-0.0470	548.774	548.539
344+55.000	-0.0302	548.951	549.223	549.646	-0.0100	549.484	344+54.450	-0.0470	548.826	548.591
344+60.000	-0.0307	549.001	549.277	549.707	-0.0100	549.536	344+59.550	-0.0470	548.878	548.643
344+65.000	-0.0312	549.051	549.332	549.769	-0.0100	549.589	344+64.670	-0.0470	548.931	548.696
344+66.610	-0.0314	549.067	549.350	549.790	-0.0100	549.606	344+66.320	-0.0470	548.948	548.713

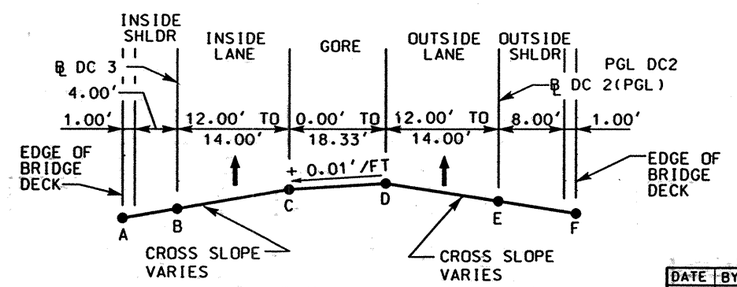

SECTION A-A
NTS

NOTES:

1. ALL ELEVATIONS ALONG SECTION A-A ARE DEPENDENT UPON POINT "E" (DC 2 PGL). THE CROSS SLOPE OF THE OUTSIDE LANE AND OUTSIDE SHOULDER ROTATE ABOUT POINT "E" (℄ DC 2 (PGL)). THE CROSS SLOPE THROUGHOUT THE GORE IS +0.01'/FT (NORMAL TO DC 2 ℄). THE CROSS SLOPE OF THE INSIDE LANE AND INSIDE SHOULDER IS DETERMINED BY THE "DC 3 SUPERELEVATION TRANSITION" AND ROTATES ABOUT POINT "C" (THE CROSS SLOPE BREAK-LINE).
2. SEE "DIRECT CONNECTOR 2 PLAN & PROFILE" FOR MORE INFORMATION
3. SEE "DIRECT CONNECTOR 2 BRIDGE LAYOUT" FOR BRIDGE DETAILS.

STATE OF TEXAS
DERRON S. VINCIK
84028
REGISTERED PROFESSIONAL ENGINEER

The seal appearing on this document was authorized by Derron S. Vincik P.E. 84028, on April 2, 1999.

DATE	BY	REV	REVISION

© 1999 Texas Department of Transportation

Brown & Root
HOUSTON, TEXAS

IH 35

SUPERELEVATION TRANSITION DETAIL

DIRECT CONNECTOR 2 / DIRECT CONNECTOR 3

SHEET 3 OF 4

FED RD DIV NO	STATE PROJECT NO	SHEET NO
6	NH-99(462)	348

STATE	STATE DIST NO	COUNTY
TEXAS	22	WEBB

CONT	SECT	JOB	HIGHWAY NO
0018	06	131	IH 35

REF FILE(S): J01LOX01.ALG, ALG LV ON = 1-8,10-39,45-63
J01LOX01.BDR, BDR LV ON = 45,52,57,59-62

D03SEX03.DGN-09 02-23-99 BAR_HO_ES05 \HCWIL\CF0039\PHASE2

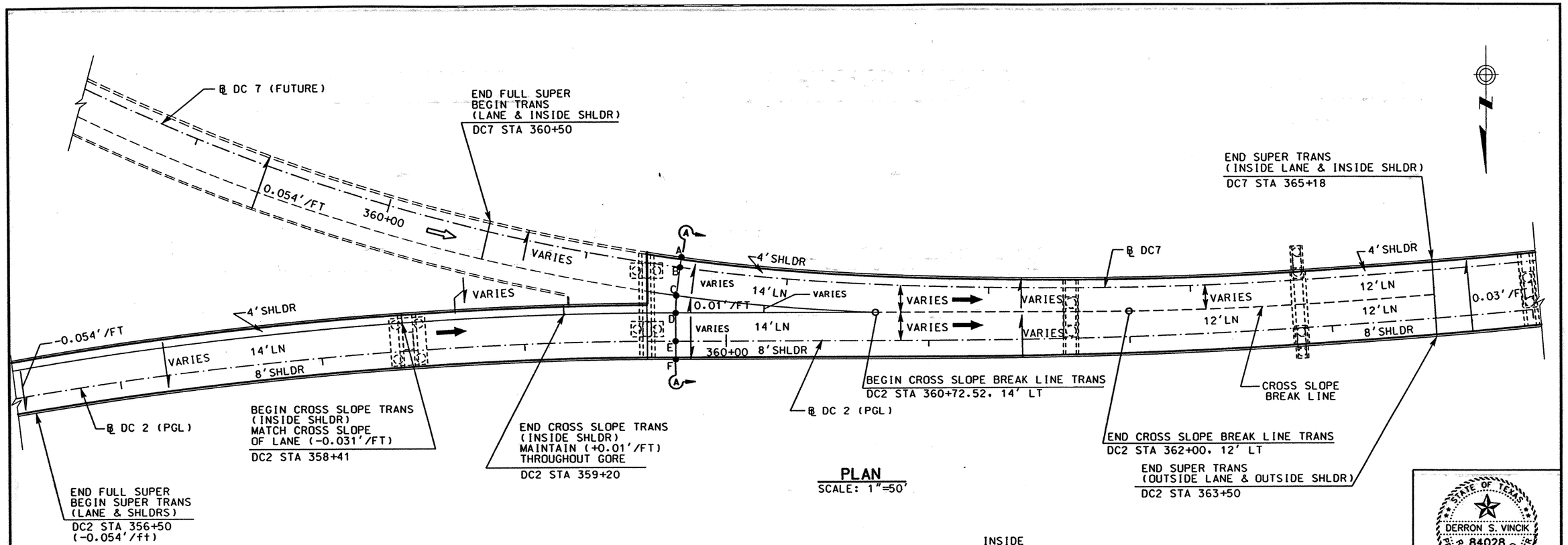

PLAN

SCALE: 1"=50'

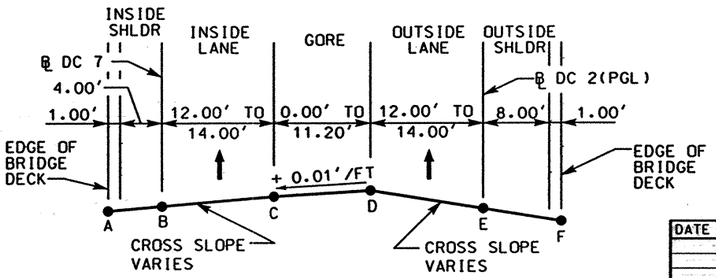

SECTION A-A

NTS

SUPERELEVATION TRANSITION TABLE

DC 2 Station	Cross Slope "D"To"F" (Ft/Ft)	Elev @ Pt "F"	Elev @ Pt "E" (PGL)	Elev @ Pt "D"	Cross Slope "D"To"C" (Ft/Ft)	Elev @ Break Pt Pt"C"	Break Pt "C" Station (DC 7 Sta)	Cross Slope "A"to"C" (Ft/Ft)	Elev @ Pt "B" BL DC 7	Elev @ Pt "A"
359+58.780	0.0170	536.308	536.461	536.699	-0.0100	536.587	361+30.180	-0.0499	535.889	535.639
359+60.000	0.0168	536.262	536.413	536.648	-0.0100	536.538	361+31.410	-0.0499	535.840	535.590
359+65.000	0.0162	536.070	536.216	536.443	-0.0100	536.341	361+36.470	-0.0496	535.646	535.398
359+70.000	0.0156	535.879	536.019	536.237	-0.0100	536.143	361+41.510	-0.0494	535.451	535.204
359+75.000	0.0150	535.687	535.822	536.032	-0.0100	535.945	361+46.550	-0.0491	535.257	535.012
359+80.000	0.0144	535.495	535.625	535.827	-0.0100	535.746	361+51.520	-0.0488	535.063	534.819
359+85.000	0.0138	535.304	535.428	535.621	-0.0100	535.547	361+56.490	-0.0486	534.867	534.624
359+90.000	0.0132	535.112	535.231	535.416	-0.0100	535.348	361+61.460	-0.0483	534.672	534.431
360+00.000	0.0120	534.729	534.837	535.005	-0.0100	534.949	361+71.390	-0.0478	534.280	534.041
360+10.000	0.0108	534.346	534.443	534.594	-0.0100	534.549	361+81.310	-0.0473	533.887	533.651
360+20.000	0.0096	533.963	534.049	534.183	-0.0100	534.148	361+91.210	-0.0468	533.493	533.259
360+40.000	0.0073	533.195	533.261	533.363	-0.0100	533.345	362+11.000	-0.0458	532.703	532.474
360+60.000	0.0049	532.429	532.473	532.542	-0.0100	532.535	362+30.770	-0.0448	531.908	531.684
360+72.520	0.0033	531.950	531.980	532.026	-0.0100	532.026	362+43.210	-0.0441	531.409	531.188
360+80.000	0.0025	531.663	531.685	531.720	-0.0100	531.720	362+50.640	-0.0438	531.116	530.897
361+00.000	0.0000	530.897	530.897	530.897	-0.0100	530.897	362+70.500	-0.0427	530.327	530.113
361+20.000	-0.0024	530.131	530.109	530.077	-0.0100	530.077	362+90.300	-0.0417	529.532	529.323
361+40.000	-0.0048	529.364	529.321	529.259	-0.0100	529.259	363+10.080	-0.0407	528.735	528.531
361+60.000	-0.0072	528.598	528.533	528.442	-0.0100	528.442	363+29.870	-0.0397	527.936	527.737
361+80.000	-0.0096	527.831	527.745	527.627	-0.0100	527.627	363+49.660	-0.0387	527.136	526.943
362+00.000	-0.0120	527.065	526.957	526.813	-0.0100	526.813	363+69.450	-0.0377	526.335	526.147
362+20.000	-0.0144	526.299	526.169	525.996	-0.0100	525.996	363+89.240	-0.0367	525.541	525.357
362+40.000	-0.0168	525.532	525.381	525.179	-0.0100	525.179	364+09.030	-0.0356	524.745	524.567
362+60.000	-0.0192	524.766	524.593	524.363	-0.0100	524.363	364+28.820	-0.0346	523.945	523.772
362+80.000	-0.0216	523.999	523.805	523.546	-0.0100	523.546	364+48.620	-0.0336	523.142	522.974
363+00.000	-0.0240	523.233	523.017	522.729	-0.0100	522.729	364+68.430	-0.0326	522.338	522.175
363+20.000	-0.0264	522.467	522.229	521.912	-0.0100	521.912	364+88.270	-0.0316	521.533	521.375
363+40.000	-0.0288	521.700	521.441	521.095	-0.0100	521.095	365+08.100	-0.0306	521.533	520.575

NOTES:

1. ALL ELEVATIONS ALONG SECTION A-A ARE DEPENDENT UPON POINT "E" (DC 2 PGL). THE CROSS SLOPE OF THE OUTSIDE LANE AND OUTSIDE SHOULDER ROTATE ABOUT POINT "E" (℄ DC 2 (PGL)). THE CROSS SLOPE THROUGHOUT THE GORE IS +0.01'/FT (NORMAL TO DC 2 ℄). THE CROSS SLOPE OF THE INSIDE LANE AND INSIDE SHOULDER IS DETERMINED BY THE "DC 7 SUPERELEVATION TRANSITION" AND ROTATES ABOUT POINT "C" (THE CROSS SLOPE BREAK-LINE).
2. SEE "DIRECT CONNECTOR 2 PLAN & PROFILE" FOR MORE INFORMATION
3. SEE "DIRECT CONNECTOR 2 BRIDGE LAYOUT" FOR BRIDGE DETAILS.

STATE OF TEXAS
DERRON S. VINCIK
84028
REGISTERED PROFESSIONAL ENGINEER

The seal appearing on this document was authorized by Derron S. Vincik P.E. 84028, on April 2, 1999.

DATE	BY	REV	REVISION

© 1999 Texas Department of Transportation

Brown & Root
HOUSTON, TEXAS

IH 35

SUPERELEVATION TRANSITION DETAIL

DIRECT CONNECTOR 2 / DIRECT CONNECTOR 7

SHEET 4 OF 4

FED RD DIV NO	STATE PROJECT NO	SHEET NO
6	NH-99(462)	349

STATE	STATE DIST NO	COUNTY
TEXAS	22	WEBB

CONT	SECT	JOB	HIGHWAY NO
0018	06	131	IH 35

REF FILE(S): J01LOX01.ALG, ALG LV ON = 1-8,10-39,45-63
J01LOX01.BDR, BDR LV ON = 45,52,57,59-62

D03SEX04.DGN-09 02-23-99 BAR_HO_ES05 \HCIVIL\CF0039\PHASE2

SUPERELEVATION RATES FOR LOOP 20 WESTBOUND MAINLANES

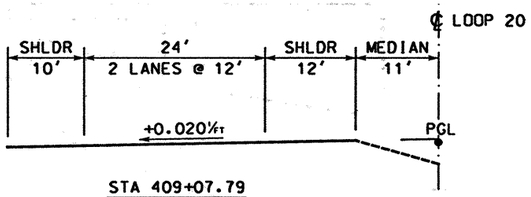

STA 409+07.79
(TIE-IN W/EXIST)

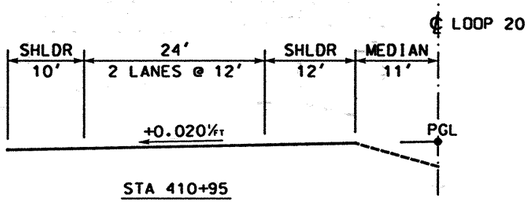

STA 410+95

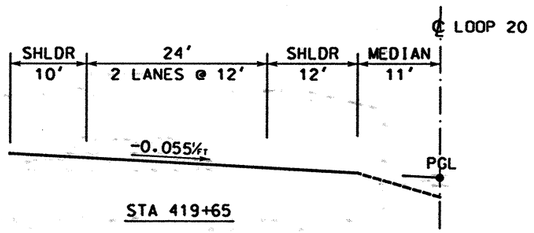

STA 419+65

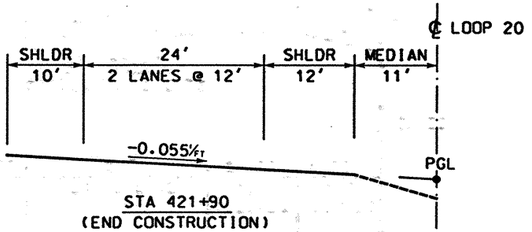

STA 421+90
(END CONSTRUCTION)

SUPERELEVATION RATES FOR LOOP 20 EASTBOUND MAINLANES

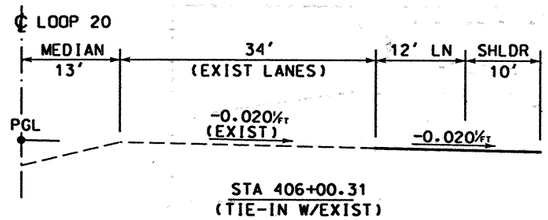

STA 406+00.31
(TIE-IN W/EXIST)

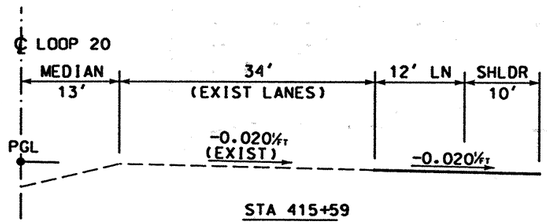

STA 415+59

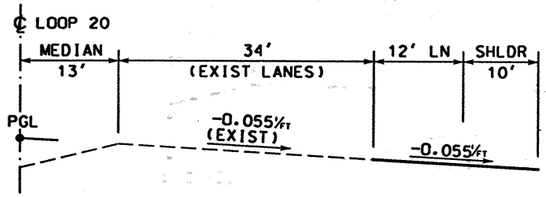

STA 419+65

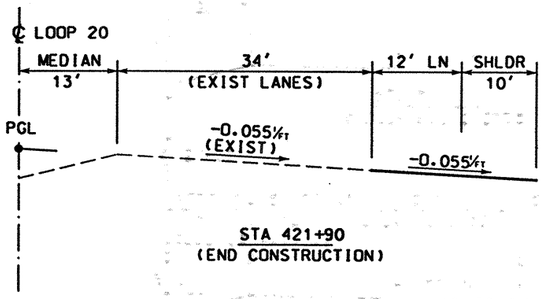

STA 421+90
(END CONSTRUCTION)

NOTES

1. SEE "LOOP 20 MAINLANES PLAN AND PROFILE" FOR MORE DETAILS.

STATE OF TEXAS
DERRON S. VINCIK
84028
REGISTERED PROFESSIONAL ENGINEER

The seal appearing on this document was authorized by Derron S. Vincik P.E. 84028, on April 2, 1999.

Derron S. Vincik

DATE	BY	REV	REVISION

© 1999 Texas Department of Transportation

Brown & Root
HOUSTON, TEXAS

LOOP 20

EASTBOUND & WESTBOUND MAINLANES SUPERELEVATION DIAGRAMS

SHEET 1 OF 1

FED RD DIV NO	STATE PROJECT NO		SHEET NO
6	C86-14-23		160
STATE	STATE DIST NO		COUNTY
TEXAS	22		WEBB
CONT	SECT	JOB	HIGHWAY NO
0086	14	023	LOOP 20

03-12-99 BAR_HO_ES05 \HCIVIL\CF0039\PHASE2
D0ISTX02.DGN-05

SUPERELEVATION RATES FOR IH-35 SOUTHBOUND MAINLANES

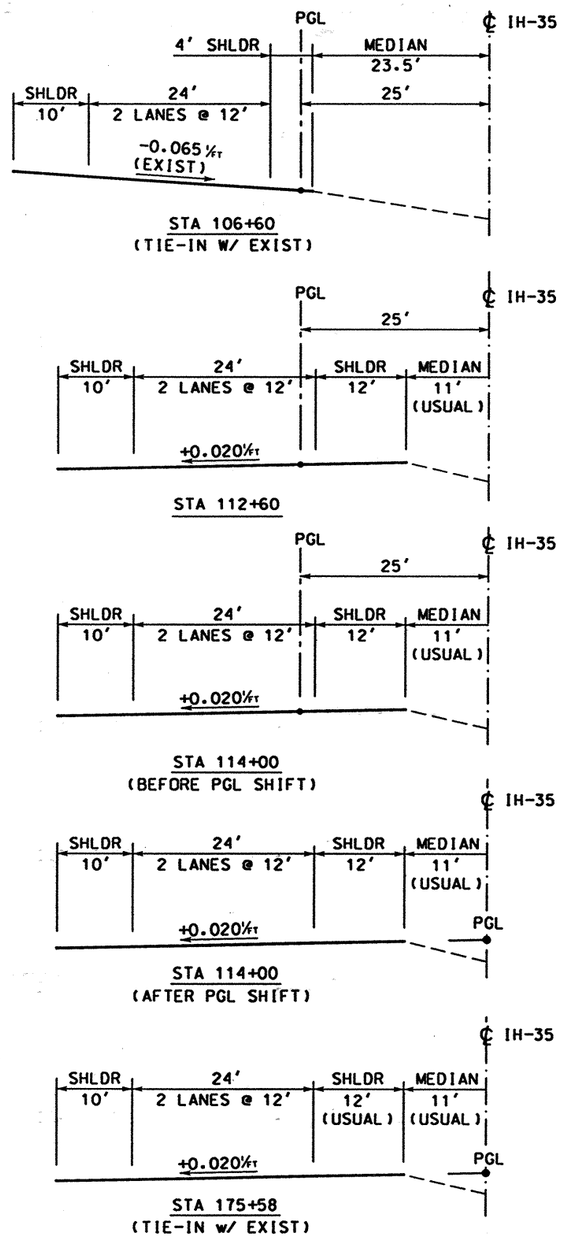

SUPERELEVATION RATES FOR IH-35 NORTHBOUND MAINLANES

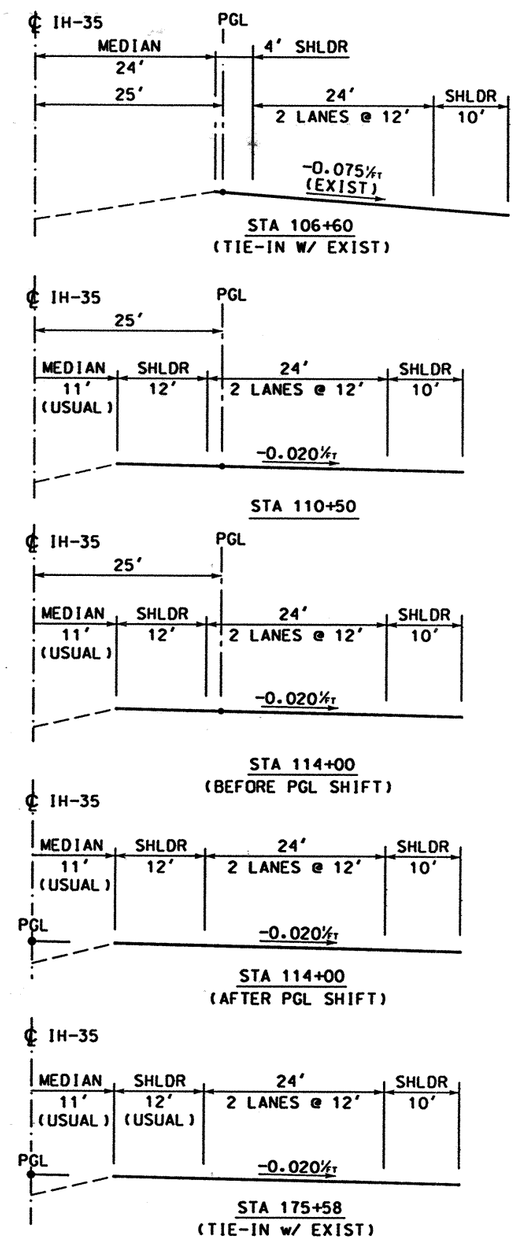

NOTES

1. SEE "IH 35 MAINLANES PLAN AND PROFILE" FOR MORE DETAILS.

STATE OF TEXAS
DERRON S. VINCIK
84028
REGISTERED PROFESSIONAL ENGINEER

The seal appearing on this document was authorized by Derron S. Vincik P.E. 84028, on April 2, 1999.

DATE	BY	REV	REVISION

© 1999 Texas Department of Transportation

Brown & Root
HOUSTON, TEXAS

IH 35

NORTHBOUND & SOUTHBOUND MAINLANES SUPERELEVATION DIAGRAMS

SHEET 1 OF 1

FED RD DIV NO	STATE PROJECT NO	SHEET NO
6	NH-99(462)	351

STATE	STATE DIST NO	COUNTY
TEXAS	22	WEBB

CONT	SECT	JOB	HIGHWAY NO
0018	06	131	IH 35

D01STX01.DGN-04 03-10-99 BAR_HO_ES05 \HCIVIL\CF0039\PHASE2

SUPERELEVATION RATES FOR "DC 1"

STATION	SECTION (FT/FT)
317+26.90	-0.02
326+00.00	-0.02
328+50.00	-0.03
336+80.00	-0.03
341+50.00	+0.045
357+50.00	+0.045
363+00.00	-0.02
374+86.32	-0.02

SUPERELEVATION RATES FOR "DC 2"

STATION	SECTION (FT/FT)
324+46.16	-0.02
343+50.00	-0.02
347+00.00	-0.054
356+50.00	-0.054
363+50.00	+0.03
371+63.00	+0.03
374+63.00	-0.02
380+31.81	-0.02

NOTES:

1. SEE "DIRECT CONNECTOR 1" AND "DIRECT CONNECTOR 2" PLAN AND PROFILE FOR MORE DETAILS.
2. SEE "DIRECT CONNECTOR #1 GORE DETAILS" (pp 522B-522D) AND "DIRECT CONNECTOR #2 GORE DETAILS" (pp 618B-618D). FOR MORE INFORMATION ABOUT THE PROPOSED AND FUTURE DIRECT CONNECTOR TERMINALS.

STATE OF TEXAS
DERRON S. VINCIK
R. 84028
REGISTERED PROFESSIONAL ENGINEER

The seal appearing on this document was authorized by Derron S. Vincik P.E. 84028, on June 3, 1999.

DATE	BY	REV	REVISION
6/03/99	DV	01	NOTES

© 1999 Texas Department of Transportation

Brown & Root
HOUSTON, TEXAS

IH 35

DIRECT CONNECTOR 1 & 2
SUPERELEVATION DIAGRAMS

SHEET 1 OF 1

FED RD DIV NO	STATE PROJECT NO		SHEET NO
6	NH-99(462)		352
STATE	STATE DIST NO	COUNTY	
TEXAS	22	WEBB	
CONT	SECT	JOB	HIGHWAY NO
0018	06	131	IH 35

DOTSTX03.DGN-04 06-02-99 BAR_HO_ES05 \HCIVIL\CF0039\PHASE2

REV. 6-25-99

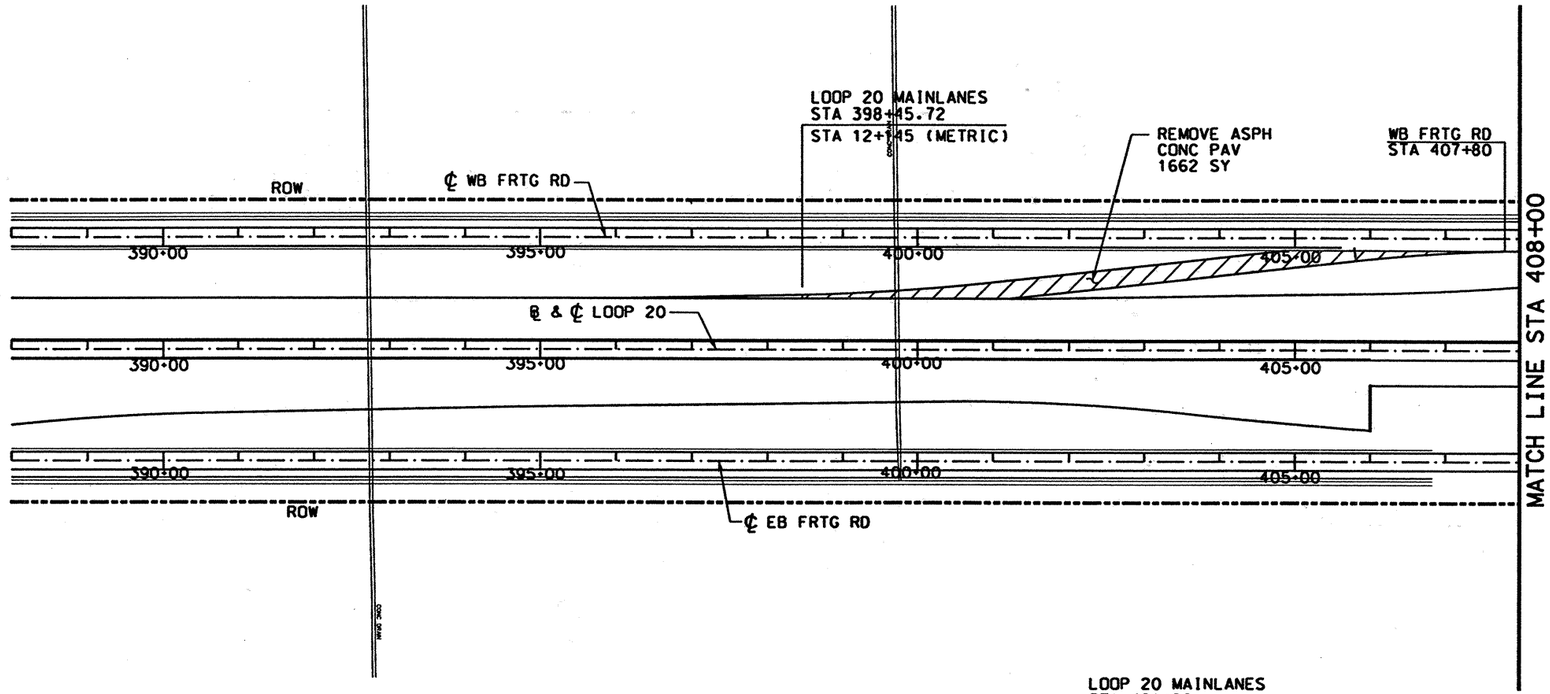

LEGEND

- REMOVE ASPH CONC PAV
- REMOVE CONC (RIPRAP)
- REMOVE CONC (SDWLK)
- REMOVE CONC (CURB AND GUTTER)

NOTE:

1. REMOVAL OF ALL DRAINAGE ITEMS IS SHOWN ON STORM SEWER PLAN AND PROFILE.

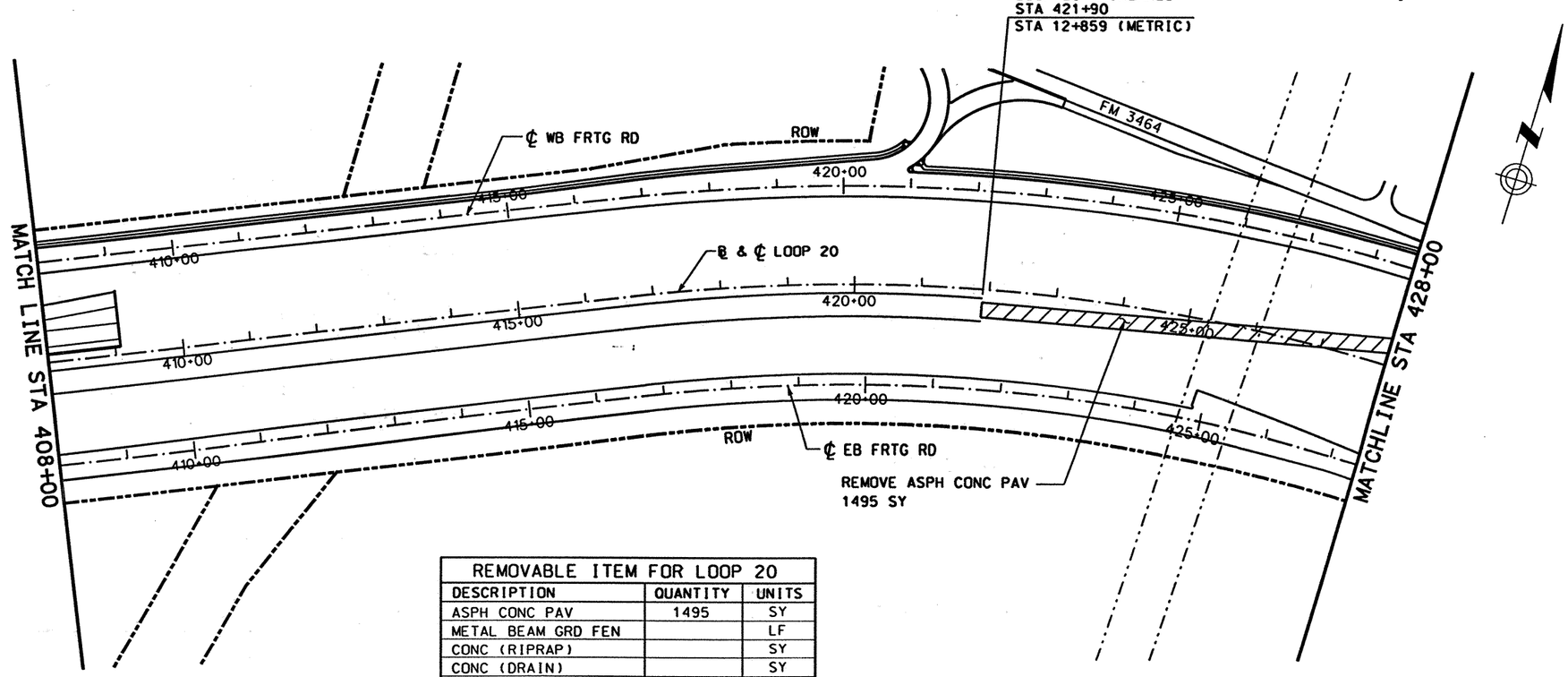

REMOVABLE ITEM FOR LOOP 20		
DESCRIPTION	QUANTITY	UNITS
ASPH CONC PAV	1495	SY
METAL BEAM GRD FEN		LF
CONC (RIPRAP)		SY
CONC (DRAIN)		SY
CONC (SIDEWALK)		SY
CONC (CURB & GUTTER)		LF

STATE OF TEXAS
DERRON S. VINCIK
84028
REGISTERED PROFESSIONAL ENGINEER

The seal appearing on this document was authorized by Derron S. Vincik P.E. 84028, on April 2, 1999.

Derron S. Vincik

DATE	BY	REV	REVISION

© 1999 Texas Department of Transportation

Brown & Root
HOUSTON, TEXAS

LOOP 20

REMOVAL LAYOUT
STA 388+00 TO STA 428+00

0 100 200
SCALE: 1"=200'

SHEET 1 OF 9

FED RD DIV NO	STATE PROJECT NO	SHEET NO
6	C86-14-23	353

STATE	STATE DIST NO	COUNTY
TEXAS	22	WEBB

CONT	SECT	JOB	HIGHWAY NO
0086	14	023	LOOP 20

D03PRX01.DGN-06 03-10-99 BAR_HO_ES05 \HCIVIL\CF0039\PHASE2

REF FILE(S): JO1LOX01.ROW, JO1LOX01.FND, JO1LOX01.BCK, JO1LOX01.ALG, JO1LOX01.EOP, JO1LOX01.BDR
LV ON = 5.45.57.60-63

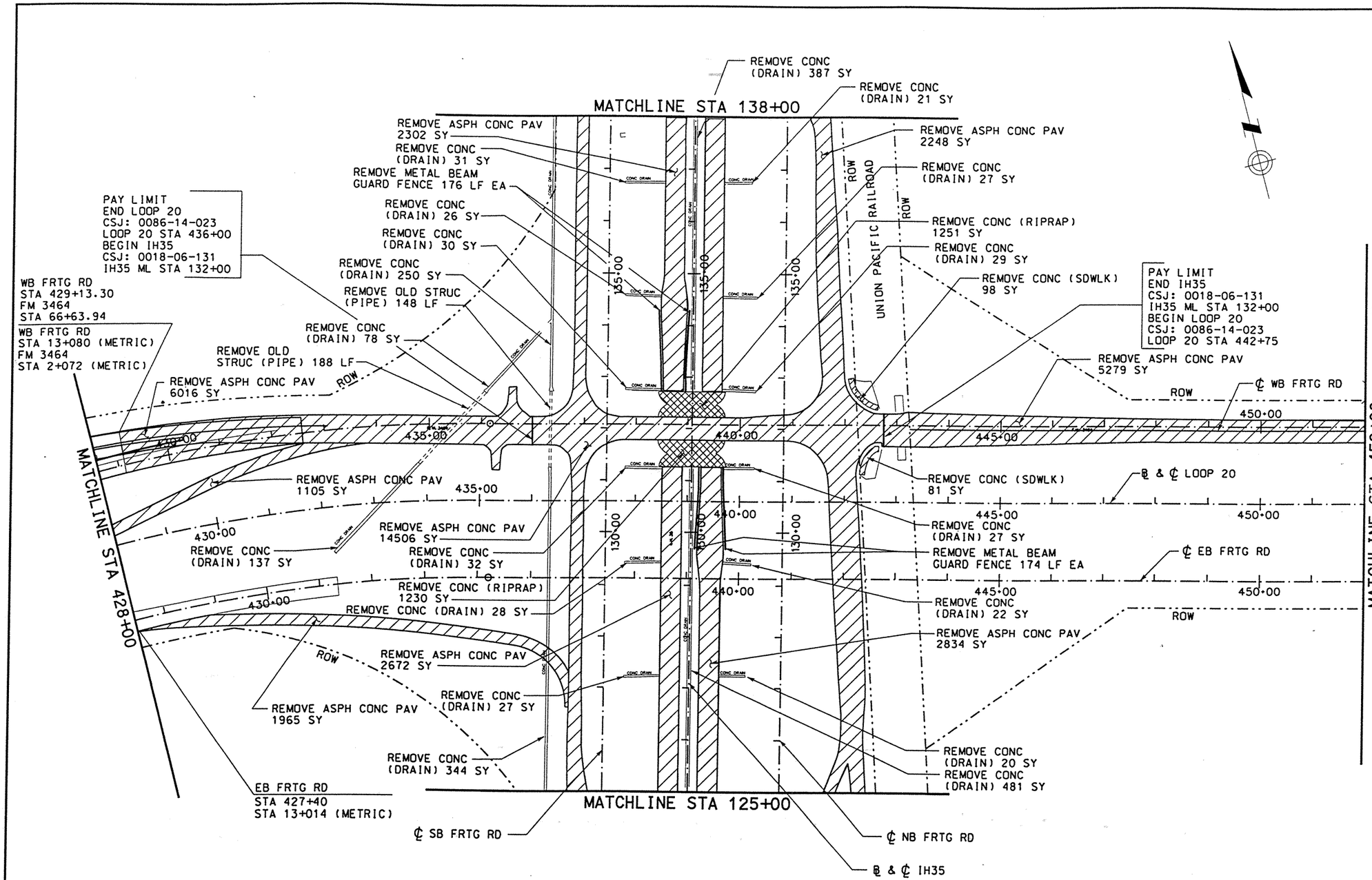

LEGEND

- REMOVE ASPH CONC PAV
- REMOVE CONC (RIPRAP)
- REMOVE CONC (SDWLK)
- REMOVE CONC (CURB AND GUTTER)

NOTE:

1. REMOVAL OF ALL DRAINAGE ITEMS IS SHOWN ON STORM SEWER PLAN AND PROFILE.
2. THE REMOVAL OF OLD STRUCTURE (PIPE), AS SHOWN ON THIS SHEET, HAS BEEN QUANTIFIED AND ACCOUNTED FOR ON THE "SUMMARY OF REMOVAL OF EXISTING DRAINAGE STRUCTURES QUANTITIES & CURB OUTLETS" SHEET.

REMOVABLE ITEM FOR IH 35		
DESCRIPTION	QUANTITY	UNITS
ASPH CONC PAV	24652	SY
METAL BEAM GRD FEN	699	LF
CONC (RIPRAP)	2482	SY
CONC (SIDEWALK)	179	SY
CONC (CURB & GUTTER)		LF
CONC (DRAIN)	1782	SY
OLD STRUCTURE (PIPE)	148	LF

REMOVABLE ITEM FOR LOOP 20		
DESCRIPTION	QUANTITY	UNITS
ASPH CONC PAV	14365	SY
METAL BEAM GRD FEN		LF
CONC (RIPRAP)		SY
CONC (SIDEWALK)		SY
CONC (CURB & GUTTER)		LF
CONC (DRAIN)	215	SY
OLD STRUCTURE (PIPE)	188	LF

REV. 6-25-99

STATE OF TEXAS
DERRON S. VINCIK
P.E. 84028
REGISTERED PROFESSIONAL ENGINEER

The seal appearing on this document was authorized by Derron S. Vincik P.E. 84028, on June 3, 1999.

Derron S. Vincik

DATE	BY	REV	REVISION
6/03/99	DV	01	REMOV OLD STRUC (PIPE)

© 1999 Texas Department of Transportation

Brown & Root
HOUSTON, TEXAS

LOOP 20

REMOVAL LAYOUT
STA 428+00 TO STA 452+00

0 20 40
SCALE: 1"=200'

SHEET 2 OF 9

FED RD DIV NO	STATE PROJECT NO	SHEET NO
6		354

STATE	STATE DIST NO	COUNTY
TEXAS	22	WEBB

CONT	SECT	JOB	HIGHWAY NO

REF FILE(S): J01LOX01.ROW, ROW LV ON = 5,45,57,60-63
J01LOX01.FND, FND LV ON =
J01LOX01.BCK, BCK LV ON =
J01LOX01.ALG, ALG LV ON =
J01LOX01.EOP, EOP LV ON =
J01LOX01.BDR, BDR LV ON =

D03PRX02.DGN-07 06-02-99 BAR_HO_ES05 \HCIVIL\CF0039\PHASE2

REMOVABLE ITEM FOR LOOP 20		
DESCRIPTION	QUANTITY	UNITS
ASPH CONC PAV	12009	SY
METAL BEAM GRD FEN		LF
CONC (RIPRAP)		SY
CONC (SIDEWALK)		SY
CONC (CURB & GUTTER)		LF
CONC (DRAIN)		SY

LEGEND

- REMOVE ASPH CONC PAV
- REMOVE CONC (RIPRAP)
- REMOVE CONC (SDWLK)
- REMOVE CONC (CURB AND GUTTER)

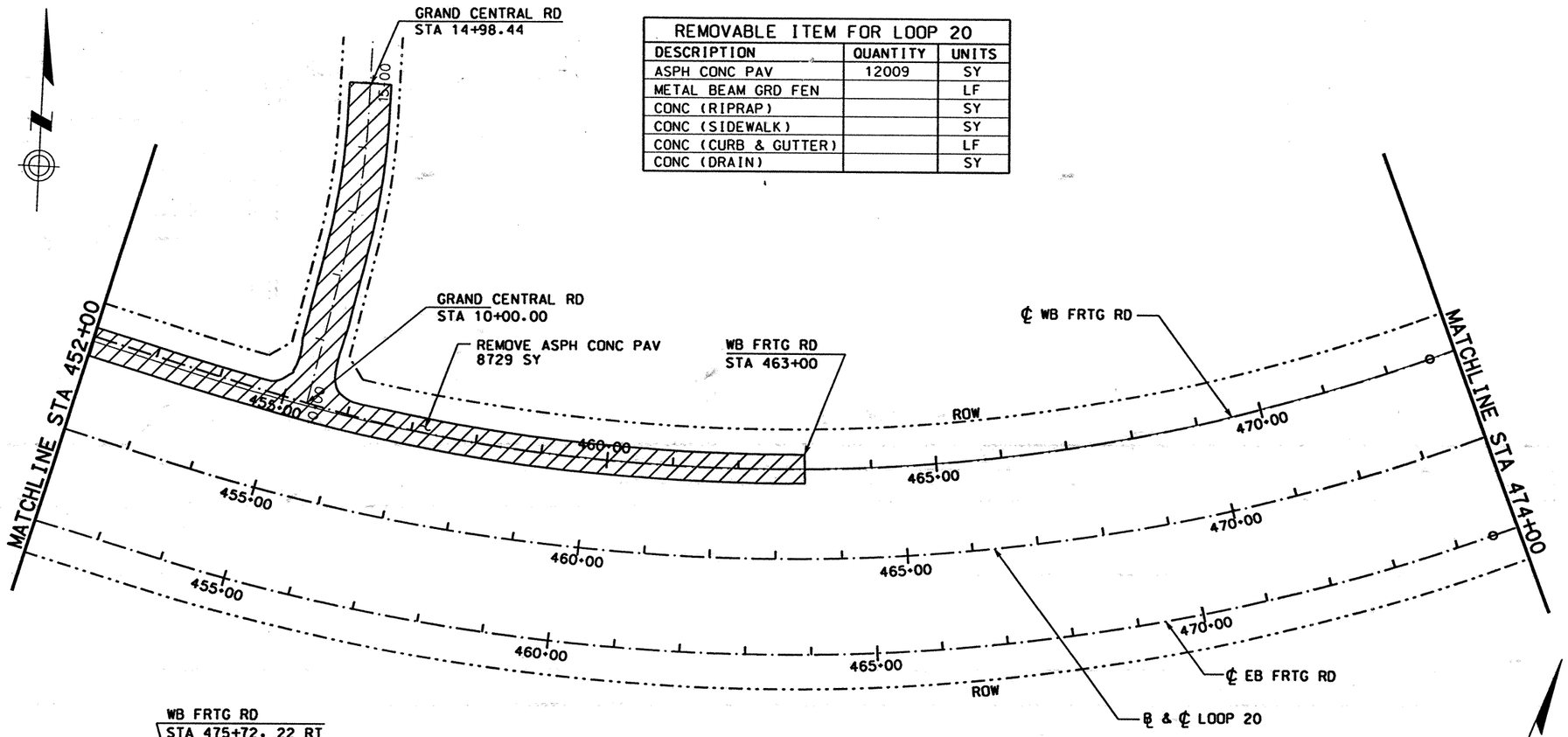

NOTE:

1. REMOVAL OF ALL DRAINAGE ITEMS IS SHOWN ON STORM SEWER PLAN AND PROFILE.

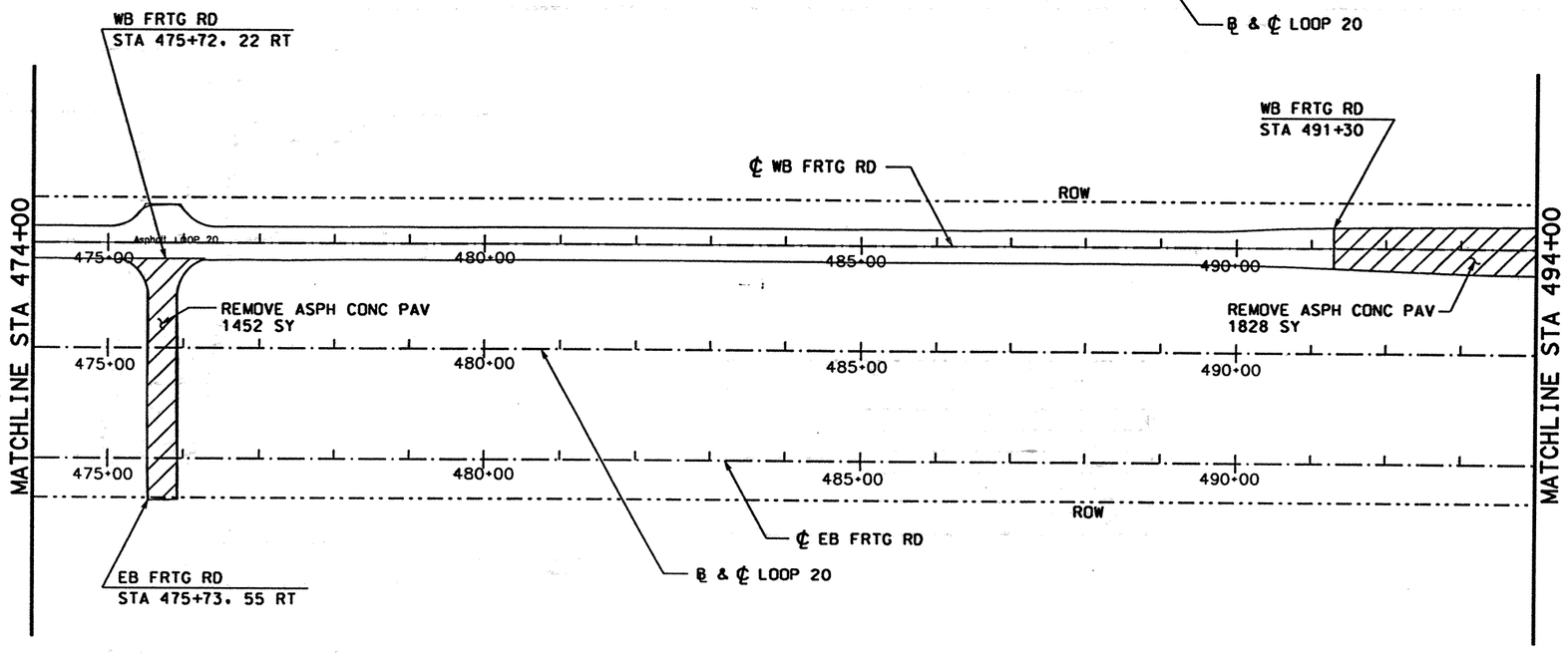

STATE OF TEXAS
DERRON S. VINCIK
84028
REGISTERED PROFESSIONAL ENGINEER

The seal appearing on this document was authorized by Derron S. Vincik P.E. 84028, on April 2, 1999.

Derron S. Vincik

DATE	BY	REV	REVISION

© 1999 Texas Department of Transportation

Brown & Root
HOUSTON, TEXAS

LOOP 20

REMOVAL LAYOUT
STA 452+00 TO STA 494+00

0 20 40
SCALE: 1"=200'

SHEET 3 OF 9

FED RD DIV NO	STATE PROJECT NO		SHEET NO
6			355
STATE	STATE DIST NO		COUNTY
TEXAS	22		WEBB
CONT	SECT	JOB	HIGHWAY NO

REF FILE(S): J01LDX01.ROW, LV ON = J01LDX01.FND, LV ON = J01LDX01.BCK, LV ON = J01LDX01.ALG, LV ON = J01LDX01.EOP, LV ON = J01LDX01.BDR, LV ON = 5.45.57.60-63

REF FILE(S): LV ON LV ON LV ON LV ON LV ON

D03PRX03.DGN-05 03-10-99 BAR_HO_ES05 \HCIVIL\CF0039\PHASE2

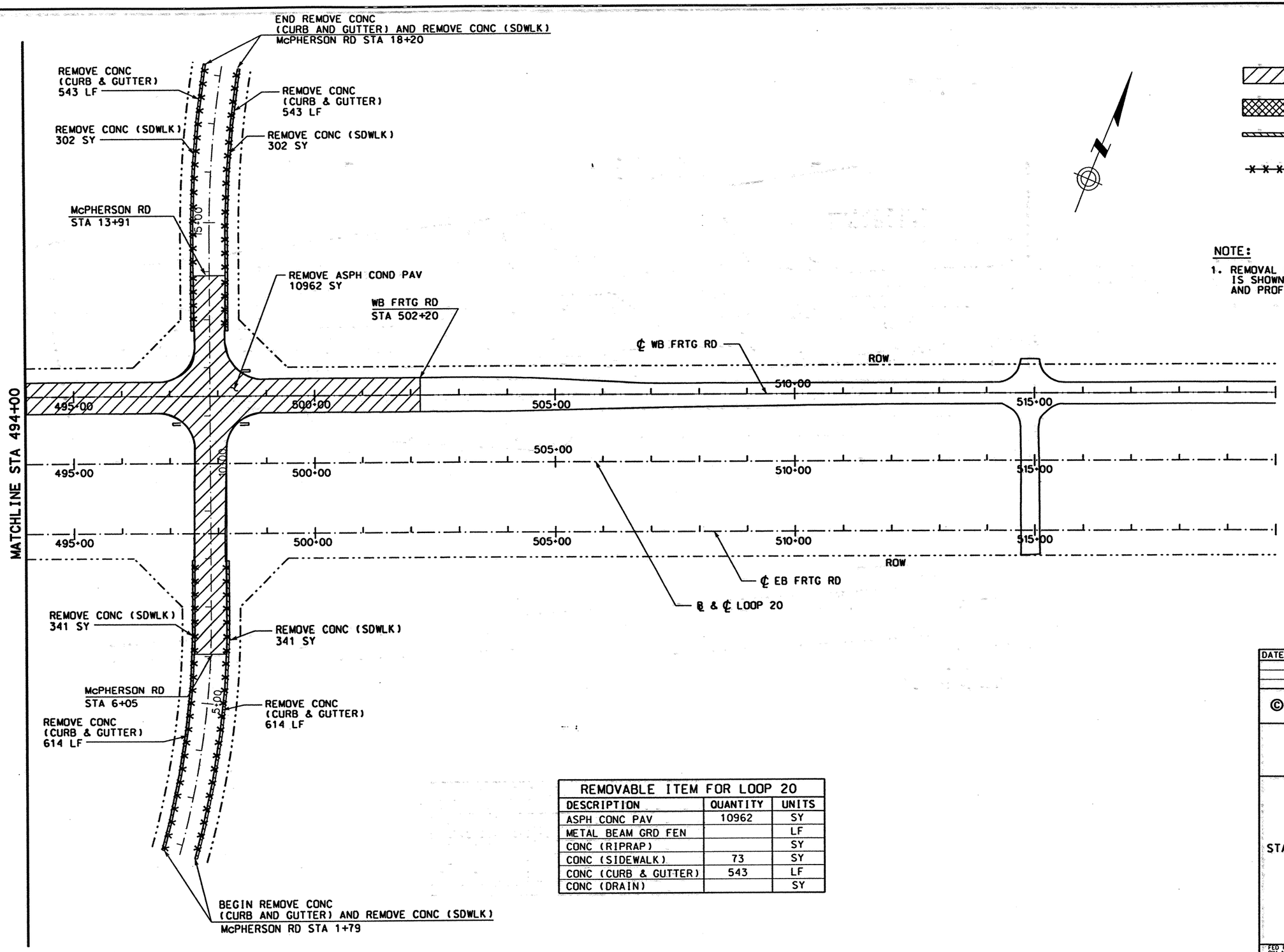

LEGEND

- REMOVE ASPH CONC PAV
- REMOVE CONC (RIPRAP)
- REMOVE CONC (SDWLK)
- REMOVE CONC (CURB AND GUTTER)

NOTE:

1. REMOVAL OF ALL DRAINAGE ITEMS IS SHOWN ON STORM SEWER PLAN AND PROFILE.

REMOVABLE ITEM FOR LOOP 20		
DESCRIPTION	QUANTITY	UNITS
ASPH CONC PAV	10962	SY
METAL BEAM GRD FEN		LF
CONC (RIPRAP)		SY
CONC (SIDEWALK)	73	SY
CONC (CURB & GUTTER)	543	LF
CONC (DRAIN)		SY

STATE OF TEXAS
DERRON S. VINCIK
84028
REGISTERED PROFESSIONAL ENGINEER

The seal appearing on this document was authorized by Derron S. Vincik P.E. 84028, on April 2, 1999.

Derron S. Vincik

DATE	BY	REV	REVISION

© 1999 Texas Department of Transportation

Brown & Root
HOUSTON, TEXAS

LOOP 20

REMOVAL LAYOUT
STA 494+00 TO STA 520+00

0 20 40
SCALE: 1"=200'

SHEET 4 OF 9

FED RD DIV NO	STATE PROJECT NO		SHEET NO
6			356
STATE	STATE DIST NO		COUNTY
TEXAS	22		WEBB
CONT	SECT	JOB	HIGHWAY NO

REF FILE(S): J01LOX01.ROW, ROW LV ON =
EPHASE1.EOP, 1.EOP LV ON = 1-40, 42-55, 5
J01LOX01.BCK, BCK LV ON =
J01LOX01.ALG, ALG LV ON =
J01LOX01.EDP, EDP LV ON =
J01LOX01.BDR, BDR LV ON = 5,45,57,60-63

REF FILE(S):

D03PRX04.DGN-05 03-10-99 BAR_HO_ES05 \HCIVIL\CF0039\PHASE2

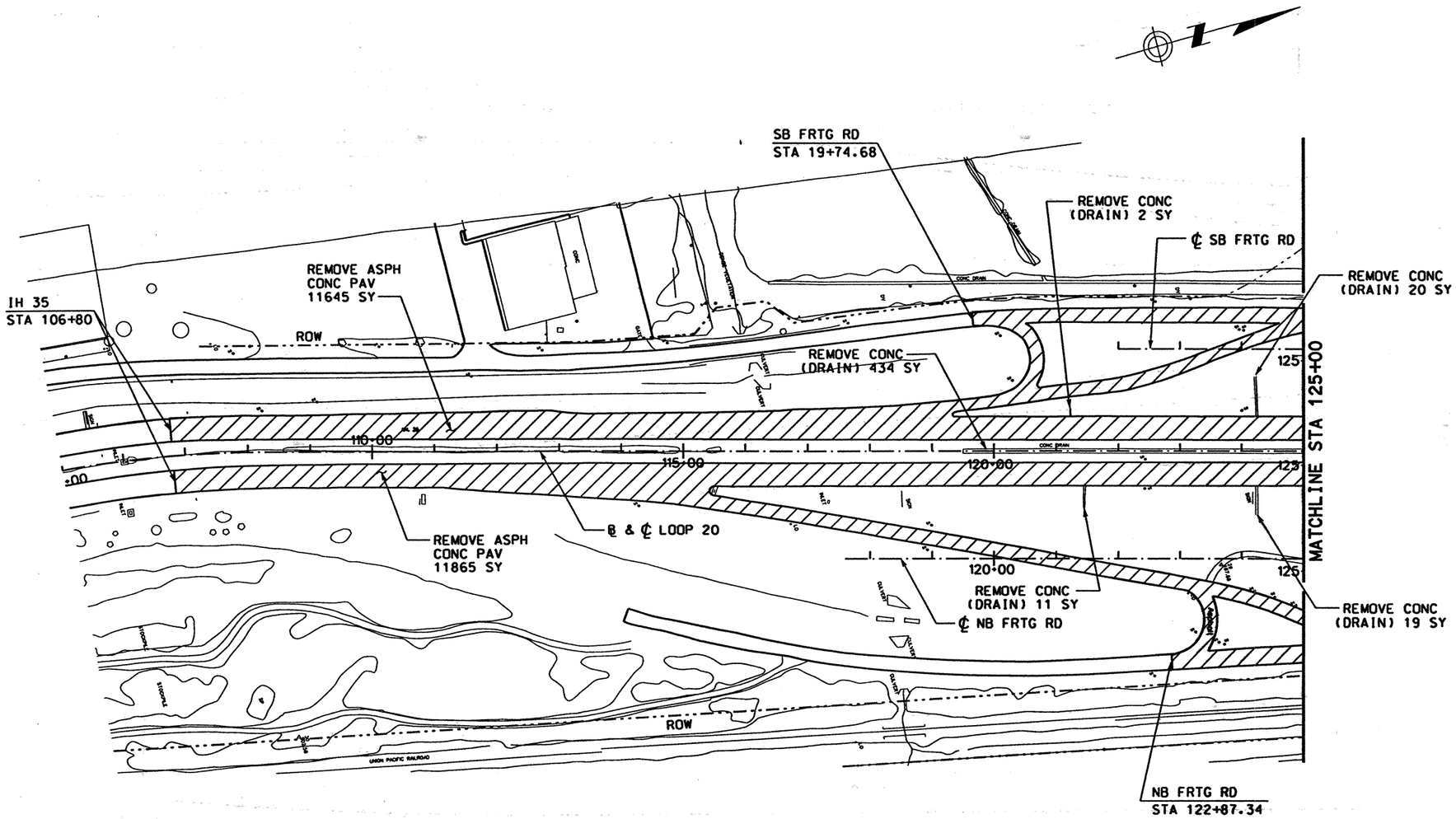

LEGEND

- REMOVE ASPH CONC PAV
- REMOVE CONC (RIPRAP)
- REMOVE CONC (SDWLK)
- REMOVE CONC (CURB AND GUTTER)

NOTE:

1. REMOVAL OF ALL DRAINAGE ITEMS IS SHOWN ON STORM SEWER PLAN AND PROFILE.

REMOVABLE ITEM FOR IH 35		
DESCRIPTION	QUANTITY	UNITS
ASPH CONC PAV	23510	SY
METAL BEAM GRD FEN		LF
CONC (RIPRAP)		SY
CONC (SIDEWALK)		SY
CONC (CURB & GUTTER)		LF
CONC (DRAIN)	486	SY

STATE OF TEXAS
DERRON S. VINCIK
84028
REGISTERED PROFESSIONAL ENGINEER

The seal appearing on this document was authorized by Derron S. Vincik P.E. 84028, on April 2, 1999.

DATE	BY	REV	REVISION

© 1999 Texas Department of Transportation

Brown & Root
HOUSTON, TEXAS

IH 35

REMOVAL LAYOUT
STA 105+00 TO STA 125+00

0 20 40
SCALE: 1"=20'

SHEET 5 OF 9

FED RD DIV NO	STATE PROJECT NO	SHEET NO
6		357

STATE	STATE DIST NO	COUNTY
TEXAS	22	WEBB

CONT	SECT	JOB	HIGHWAY NO

REF FILE(S): J01LOX01.ROW, ROW LV ON =
J01LOX01.FND, FND LV ON =
J01LOX01.BCK, BCK LV ON =
J01LOX01.ALG, ALG LV ON =
J01LOX01.EOP, EOP LV ON =
J01LOX01.BDR, BDR LV ON = 5,45,57,60-63

REF FILE(S): J01LOX01.DRN, DRN LV ON =
LV ON =
LV ON =
LV ON =
LV ON =
LV ON =

D03PRX06.DGN-05 03-10-99 BAR_HO_ES05 \HCIVIL\CF0039\PHASE2

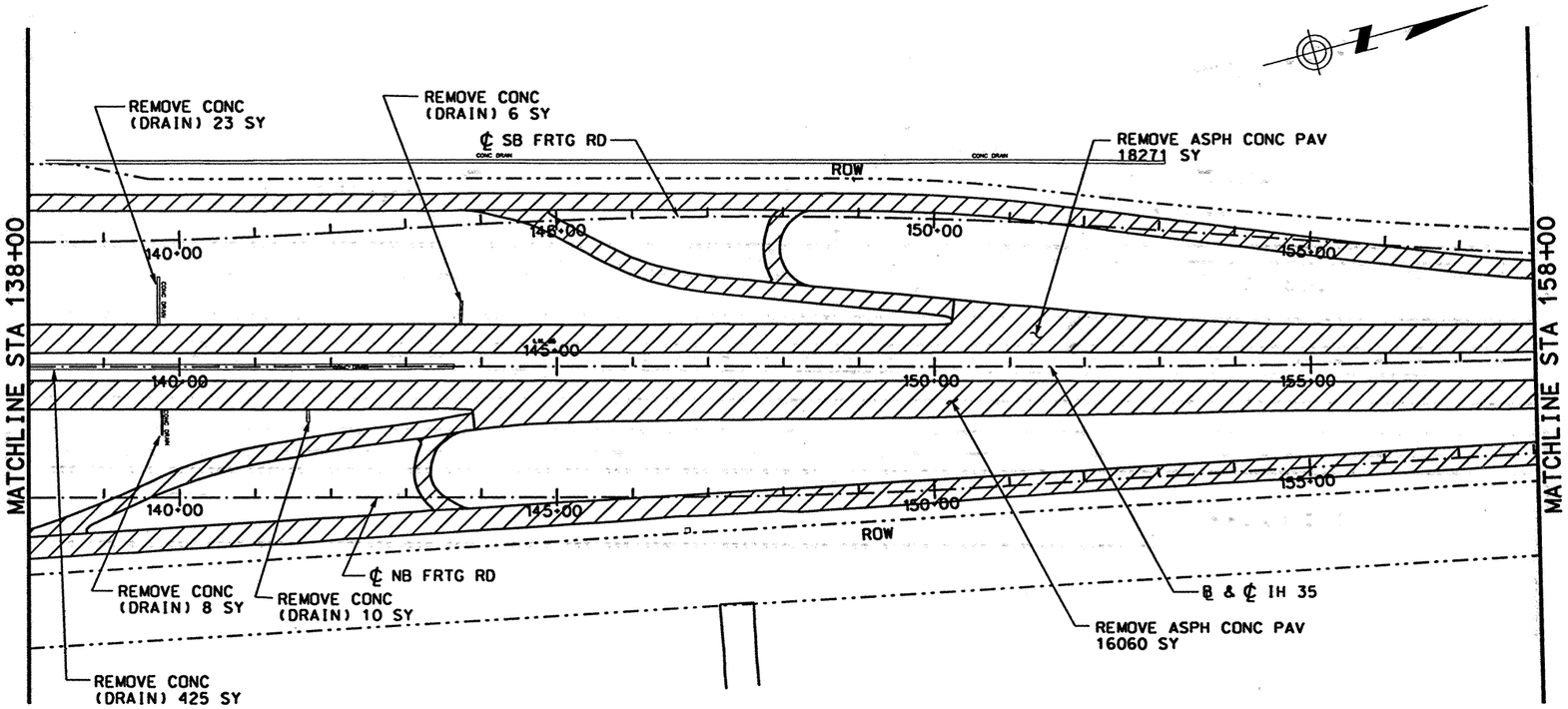

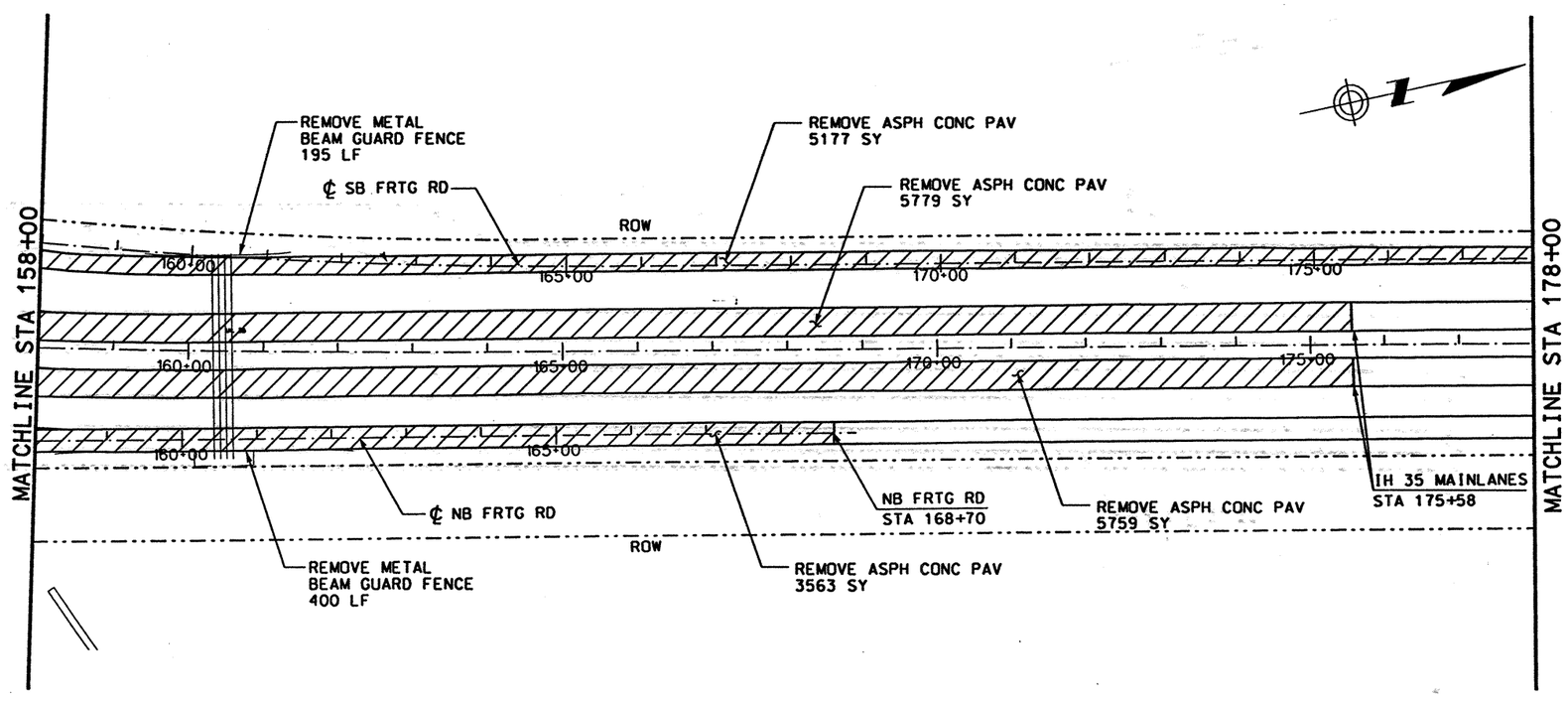

LEGEND

- REMOVE ASPH CONC PAV
- REMOVE CONC (RIPRAP)
- REMOVE CONC (SDWLK)
- REMOVE CONC (CURB AND GUTTER)

REMOVABLE ITEM FOR LOOP 20		
DESCRIPTION	QUANTITY	UNITS
ASPH CONC PAV	54609	SY
METAL BEAM GRD FEN	595	LF
CONC (RIPRAP)		SY
CONC (SIDEWALK)		SY
CONC (CURB & GUTTER)		LF
CONC (DRAIN)	472	SY

NOTE:

1. REMOVAL OF ALL DRAINAGE ITEMS IS SHOWN ON STORM SEWER PLAN AND PROFILE.

STATE OF TEXAS
DERRON S. VINCIK
84028
REGISTERED PROFESSIONAL ENGINEER

The seal appearing on this document was authorized by Derron S. Vincik P.E. 84028, on April 2, 1999.

Derron S. Vincik

DATE	BY	REV	REVISION

© 1999
Texas Department of Transportation

Brown & Root
HOUSTON, TEXAS

IH 35

REMOVAL LAYOUT
STA 138+00 TO
STA 178+00

0 20 40
SCALE: 1"=200'

SHEET 6 OF 9

FED RD DIV NO	STATE PROJECT NO	SHEET NO
6		358

STATE	STATE DIST NO	COUNTY
TEXAS	22	WEBB

CONT	SECT	JOB	HIGHWAY NO

D03PRX05.DGN-05 03-10-99 BAR_HO_ES05 \HCIVIL\CF0039\PHASE2

REF FILE(S): J01LDX01.ROW, J01LDX01.FND, J01LDX01.BCK, J01LDX01.ALG, J01LDX01.EOP, J01LDX01.BDR
LV ON = ROW, FND, BCK, ALG, EOP, BDR
LV ON = 5,45,57,60-63

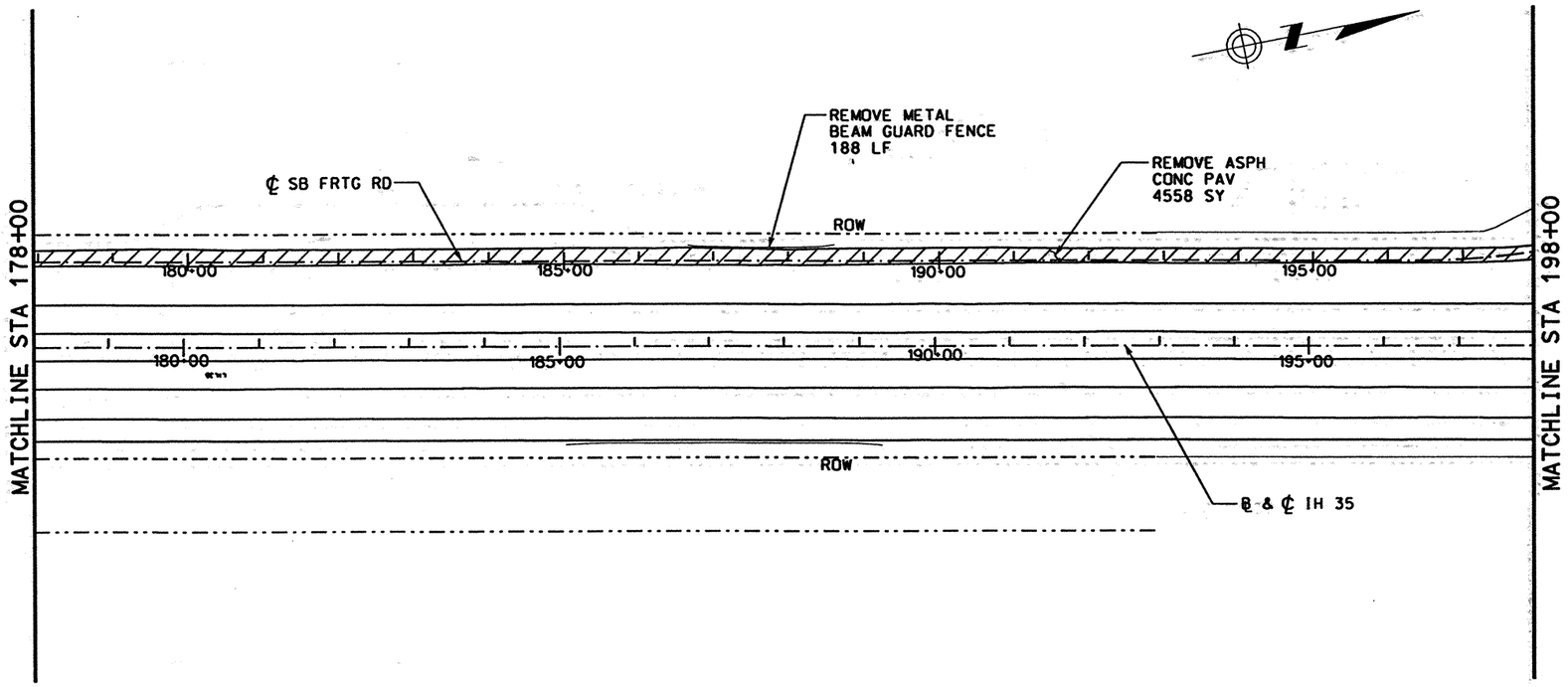

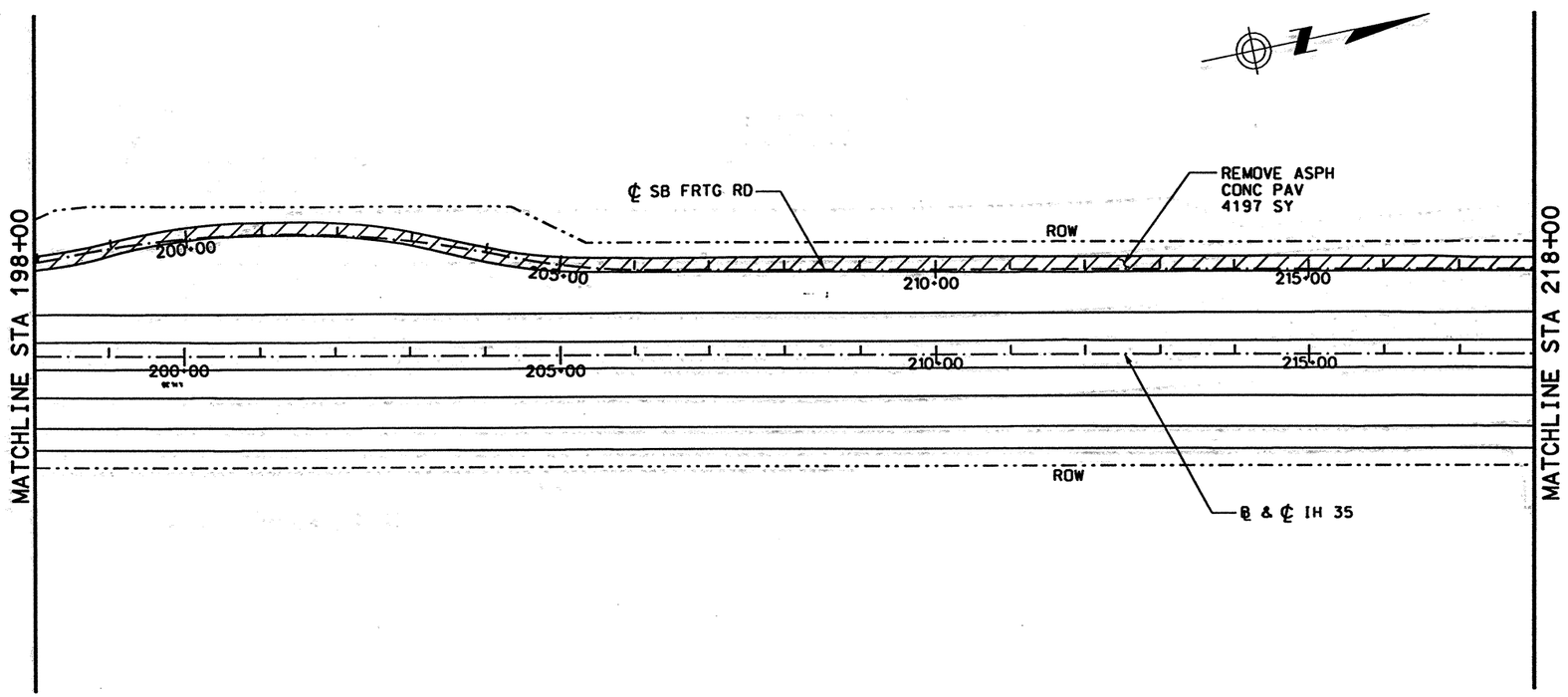

LEGEND

- REMOVE ASPH CONC PAV
- REMOVE CONC (RIPRAP)
- REMOVE CONC (SDWLK)
- REMOVE CONC (CURB AND GUTTER)

REMOVABLE ITEM FOR IH 35		
DESCRIPTION	QUANTITY	UNITS
ASPH CONC PAV	8755	SY
METAL BEAM GRD FEN	188	LF
CONC (RIPRAP)		SY
CONC (SIDEWALK)		SY
CONC (CURB & GUTTER)		LF
CONC (DRAIN)		SY

NOTE:

1. REMOVAL OF ALL DRAINAGE ITEMS IS SHOWN ON STORM SEWER PLAN AND PROFILE.

STATE OF TEXAS
DERRON S. VINCIK
P.E. 84028
REGISTERED PROFESSIONAL ENGINEER

The seal appearing on this document was authorized by Derron S. Vincik P.E. 84028, on April 2, 1999.

DATE	BY	REV	REVISION

© 1999 Texas Department of Transportation

Brown & Root
HOUSTON, TEXAS

IH 35

REMOVAL LAYOUT
STA 178+00 TO
STA 218+00

0 20 40
SCALE: 1"=200'

SHEET 7 OF 9

FED RD DIV NO	STATE PROJECT NO	SHEET NO
6		351

STATE	STATE DIST NO	COUNTY
TEXAS	22	WEBB

CONT	SECT	JOB	HIGHWAY NO

D03PRX07.DGN-02 03-10-99 BAR_HO_ES05 \HCIVIL\CF0039\PHASE2

REF FILE(S): J01LDX01.ROW, ROW LV ON = 5.45.57.60-63
J01LDX01.FND, FND LV ON =
J01LDX01.BCK, BCK LV ON =
J01LDX01.ALG, ALG LV ON =
J01LDX01.EDP, EDP LV ON =
J01LDX01.BDR, BDR LV ON =

REF FILE(S): LV ON = LV ON = LV ON = LV ON = LV ON = LV ON =

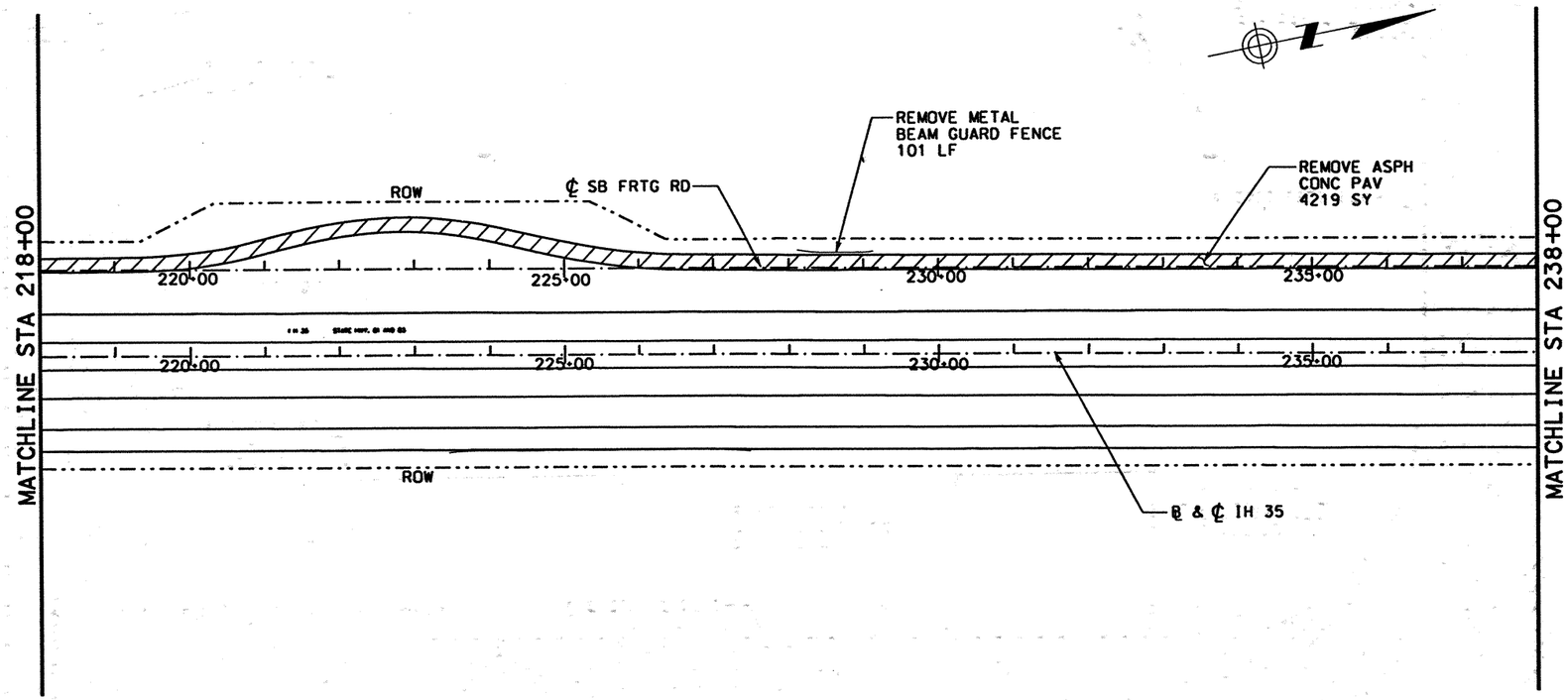

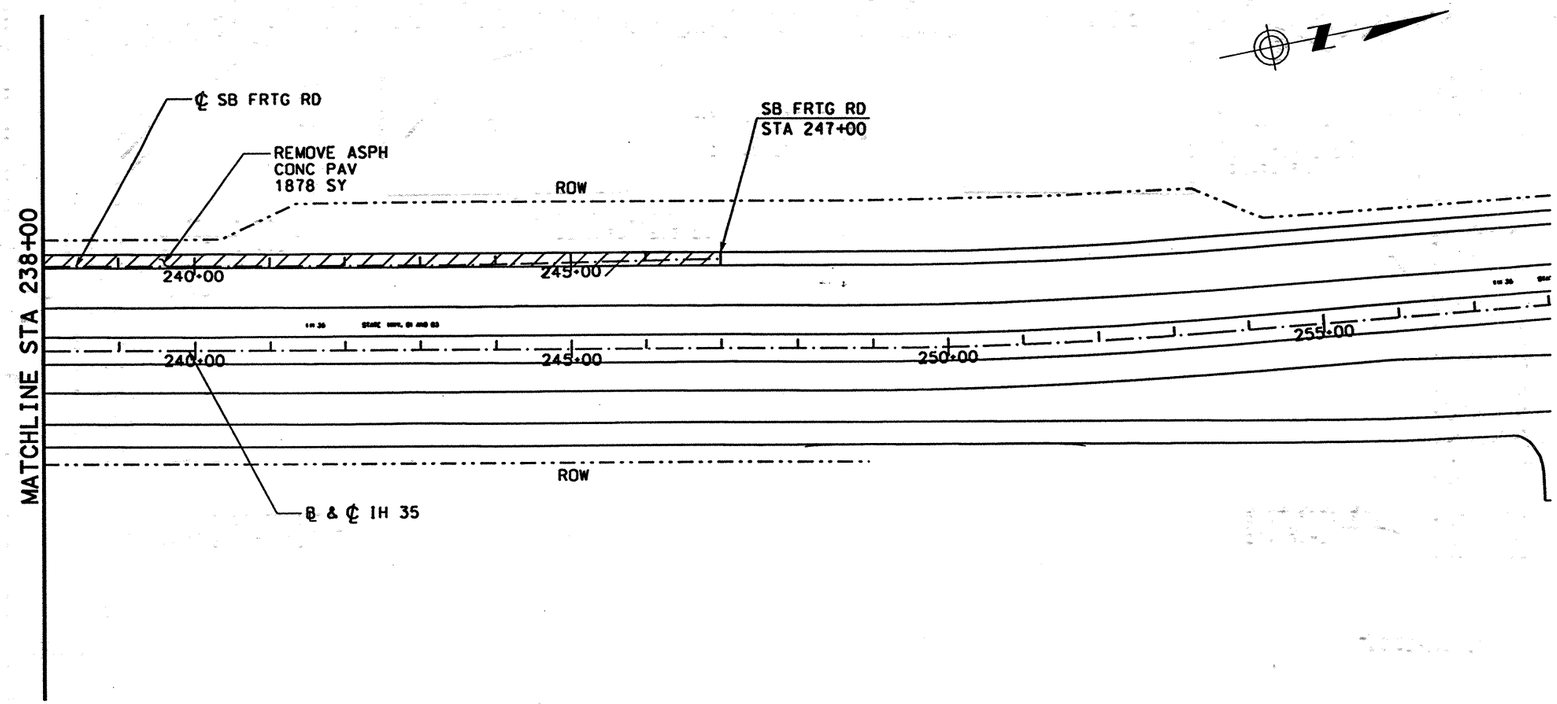

LEGEND

- REMOVE ASPH CONC PAV
- REMOVE CONC (RIPRAP)
- REMOVE CONC (SDWLK)
- REMOVE CONC (CURB AND GUTTER)

REMOVABLE ITEM FOR IH 35		
DESCRIPTION	QUANTITY	UNITS
ASPH CONC PAV	6097	SY
METAL BEAM GRD FEN	101	LF
CONC (RIPRAP)		SY
CONC (SIDEWALK)		SY
CONC (CURB & GUTTER)		LF
CONC (DRAIN)		SY

NOTE:

1. REMOVAL OF ALL DRAINAGE ITEMS IS SHOWN ON STORM SEWER PLAN AND PROFILE.

STATE OF TEXAS
DERRON S. VINCIK
84028
REGISTERED PROFESSIONAL ENGINEER

The seal appearing on this document was authorized by Derron S. Vincik P.E. 84028, on April 2, 1999.

Derron S. Vincik

DATE	BY	REV	REVISION

© 1999 Texas Department of Transportation

Brown & Root
HOUSTON, TEXAS

IH 35

REMOVAL LAYOUT
STA 218+00 TO
STA 248+78.16

0 20 40
SCALE: 1"=200'

SHEET 8 OF 9

FED RD DIV NO	STATE PROJECT NO		SHEET NO
6			360
STATE	STATE DIST NO		COUNTY
TEXAS	22		WEBB
CONT	SECT	JOB	HIGHWAY NO

REF FILE(S): JO1LOX01.ROW, ROW LV ON =
JO1LOX01.FND, FND LV ON =
JO1LOX01.BCK, BCK LV ON =
JO1LOX01.ALG, ALG LV ON =
JO1LOX01.EOP, EOP LV ON =
JO1LOX01.BDR, BDR LV ON = 5,45,57,60-63

REF FILE(S): LV ON LV ON LV ON LV ON LV ON

D03PRX08.DGN-02 03-10-99 BAR_HO_ES05 \HCIVIL\CF0039\PHASE2

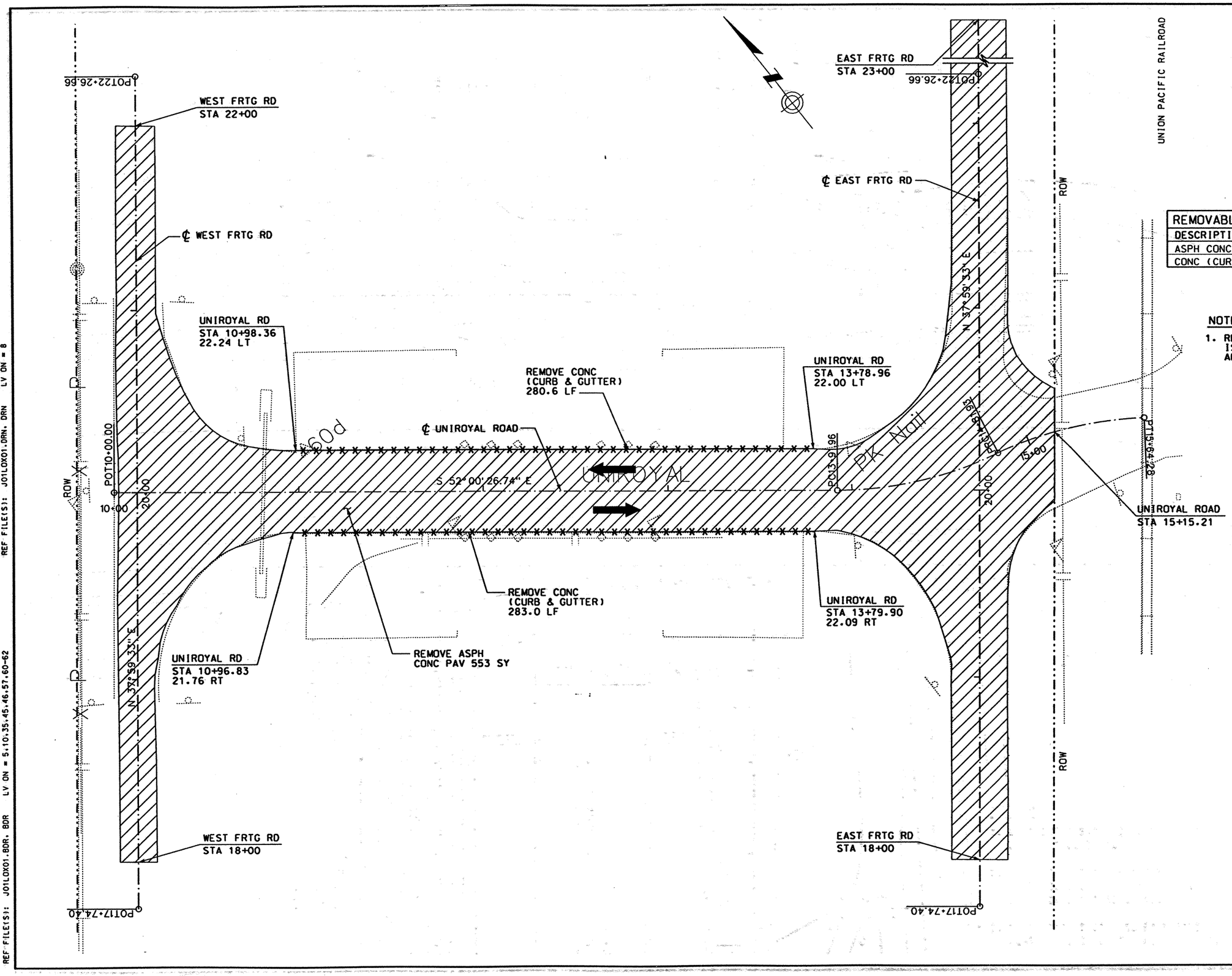

LEGEND

- REMOVE ASPH CONC PAV
- REMOVE CONC (RIPRAP)
- REMOVE CONC (SDWLK)
- REMOVE CONC (CURB & GUTTER)

REMOVABLE ITEM FOR UNIROYAL RD		
DESCRIPTION	QUANTITY	UNITS
ASPH CONC PAV	5532.6	SY
CONC (CURB & GUTTER)	563.6	LF

NOTE:

1. REMOVAL OF ALL DRAINAGE ITEMS IS SHOWN ON STORM SEWER PLAN AND PROFILE.

STATE OF TEXAS
DERRON S. VINCIK
84028
REGISTERED PROFESSIONAL ENGINEER

The seal appearing on this document was authorized by Derron S. Vincik P.E. 84028, on April 2, 1999.

DATE	BY	REV	REVISION

© 1999 Texas Department of Transportation

Brown & Root
HOUSTON, TEXAS

IH 35

UNIROYAL ROAD
REMOVAL LAYOUT

0 50 100
SCALE: 1"=50'

SHEET 9 OF 9

FED RD DIV NO	STATE PROJECT NO	SHEET NO
6	NH-99(462)	361

STATE	STATE DIST NO	COUNTY
TEXAS	22	WEBB

CONT	SECT	JOB	HIGHWAY NO
0018	05		IH 35

D03URX03.DGN-02 03-10-99 BAR_HO_ES05 \HCIVIL\CF0039\PHASE2

REF FILE(S): J01LOX01.BCK, BCK LV ON = 1-30
J01LOX01.EDP, EDP LV ON = 1-11,13-17,19-27,29-41,43-53,5
J01LOX01.EDP, ALG LV ON = 1-44
J01LOX01.BDR, BDR LV ON = 5,10,35,45,46,57,60-62

REF FILE(S): J01LOX01.PRO, PRO LV ON = 1-63
J01LOX01.UTI, UTI LV ON = 1-63
J01LOX01.ILL, ILL LV ON = 20
J01LOX01.FND, FND LV ON = 35
J01LOX01.DRN, DRN LV ON = 8

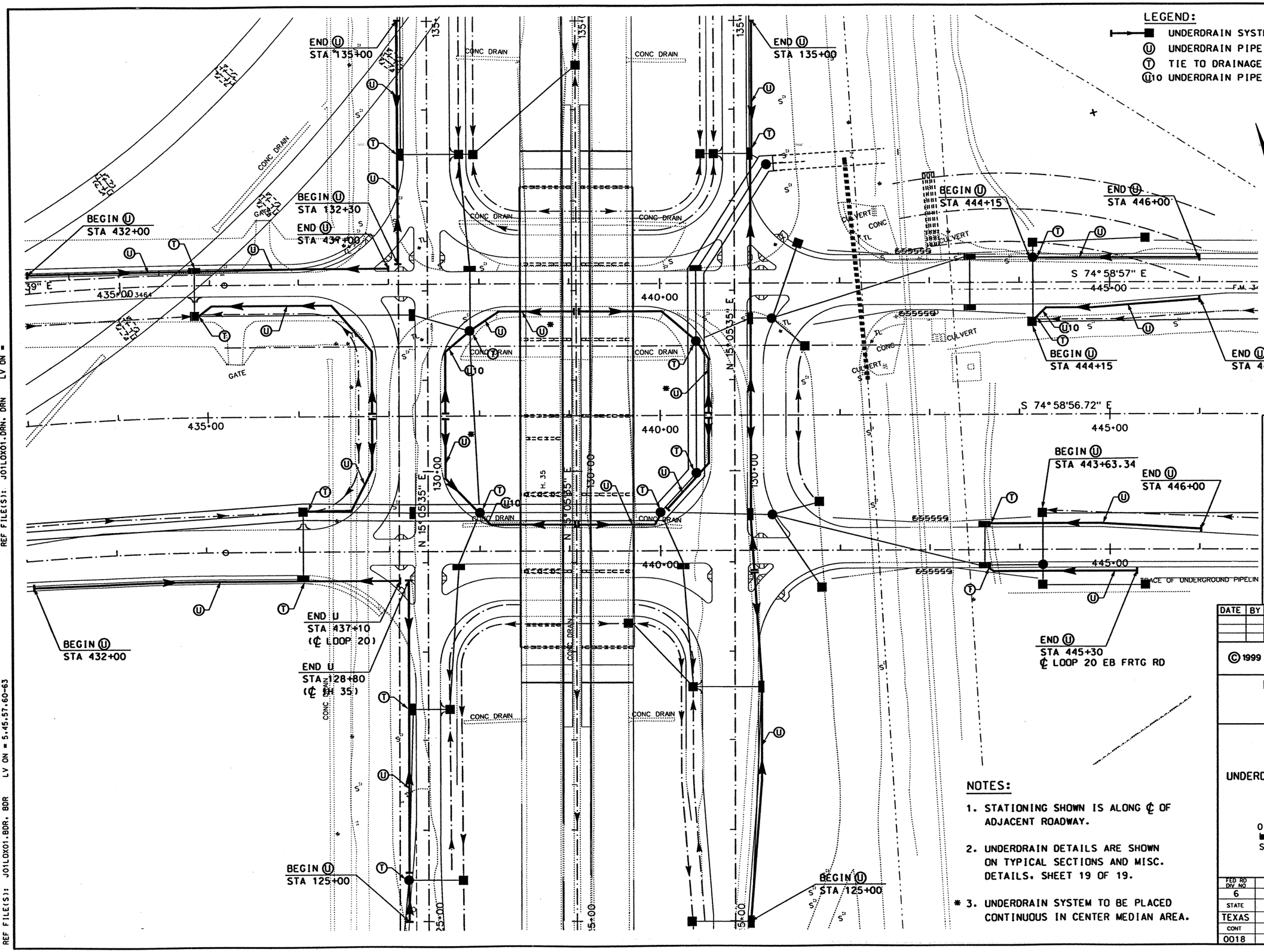

STATE OF TEXAS
CHARLES M. SHINE
62999
REGISTERED PROFESSIONAL ENGINEER

The seal appearing on this document was authorized by Charles Shine P.E. 62999, on April 2, 1999.

Charles Shine P.E.

DATE	BY	REV	REVISION

© 1999 Texas Department of Transportation

Brown & Root
HOUSTON, TEXAS

IH 35

UNDERDRAIN SYSTEM LAYOUT

0 50 100
SCALE: 1"=100'

SHEET 1 OF 1

FED RD DIV NO	STATE PROJECT NO	SHEET NO
6	NH-99(462)	362

STATE	STATE DIST NO	COUNTY
TEXAS	22	WEBB

CONT	SECT	JOB	HIGHWAY NO
0018	06	131	IH 35

NOTES:

1. STATIONING SHOWN IS ALONG ℄ OF ADJACENT ROADWAY.
2. UNDERDRAIN DETAILS ARE SHOWN ON TYPICAL SECTIONS AND MISC. DETAILS. SHEET 19 OF 19.
3. * UNDERDRAIN SYSTEM TO BE PLACED CONTINUOUS IN CENTER MEDIAN AREA.

REF FILE(S): J01LOX01.ROW, ROW LV ON =
J01LOX01.FND, FND LV ON =
J01LOX01.BCK, BCK LV ON =
J01LOX01.ALG, ALG LV ON =
J01LOX01.EOP, EOP LV ON =
J01LOX01.BDR, BDR LV ON = 5,45,57,60-63

REF FILE(S): J01LOX01.DRN, DRN LV ON

D13UDX01.DGN-06 03-11-99 BAR_HO_ES05 \HCIVIL\CF0039\PHASE2

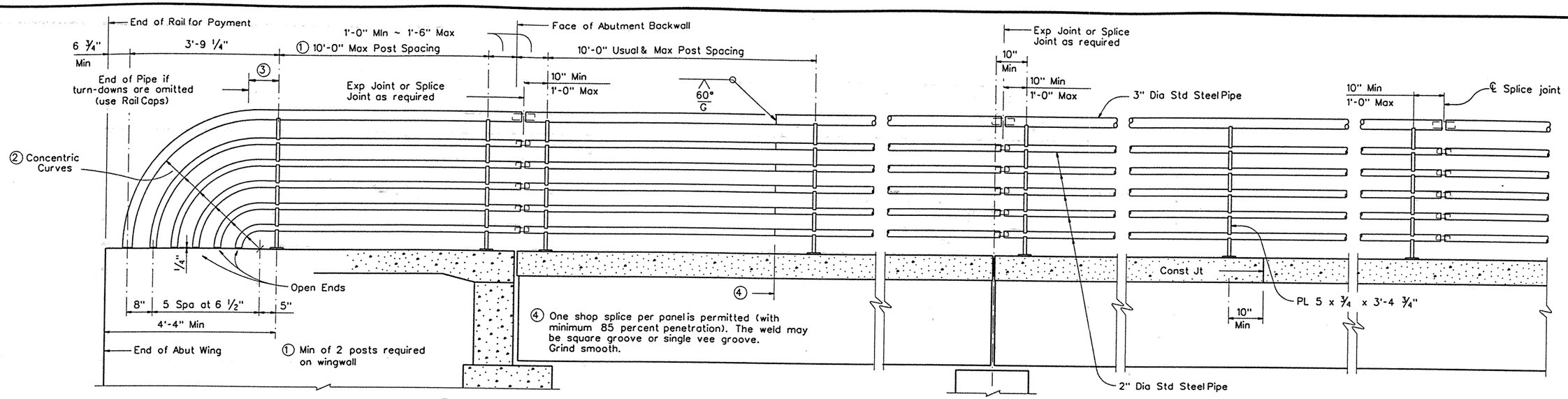

② Portion of railing with turn-downs to be used or omitted as indicated on Bridge Layout.

③ 10" Min ~ 1'-6" Max if turn-downs are omitted.

AT ABUTMENT BENTS | AT SHOP SPLICE | AT ENDS OF UNIT | AT SLAB CONST JOINT | AT SPLICE JOINT

ROADWAY ELEVATION OF RAIL

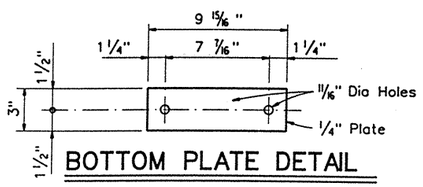

BOTTOM PLATE DETAIL

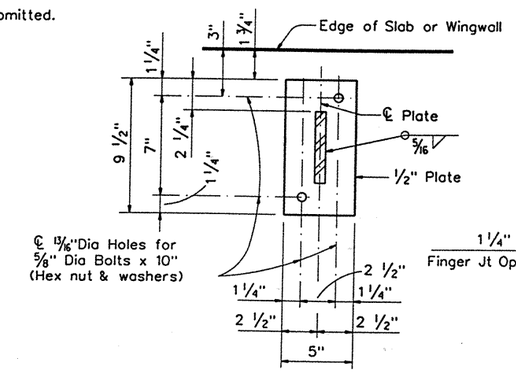

BASE PLATE DETAIL

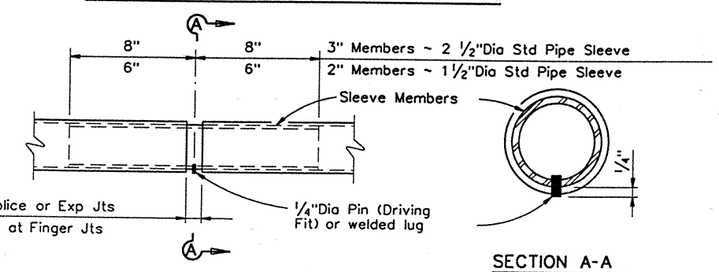

AT SPLICE OR EXP JTS

HANDRAIL SPLICE DETAIL

SECTION A-A

GENERAL NOTES:

Designed according to current AASHTO Standard Specifications for Highway Bridges.

Pipe for railing shall be Std Pipe (ASTM A-53) (E or S Grade A or B).

All anchor bolts, nuts, washers and bottom plates to be included in unit price bid for railing.

Panel lengths of railing shall be attached to a minimum of three posts except at abutment wingwalls.

All steel components to be galvanized unless otherwise shown in plans.

Anchor bolts shall be 5/8" Dia ASTM A307 Grade A bolts (or A36 threaded rods with one tack welded nex nut each) with one hex nut and one 1 3/4" O.D. hardened steel washer at each bolt. Threaded rods may be 0.557" minimum diameter with rolled threads. Nuts shall conform to to A563 requirements. The untapped blanks shall be galvanized prior to cutting the threads. Threads for bolts and nuts shall have Class 2A and 2B fit tolerances in accordance with ANSI B1.1.

Face of rail and posts shall be vertical transversely unless otherwise approved by the Engineer. Posts shall be perpendicular to adjacent roadway grade. Grout may be used under base plates if necessary.

Shop drawings to be submitted to the Bridge Engineer for approval will be required only for rails on horizontal curves in which case the rail members shall be fabricated to the required radius for radii of 600' or less. For rails not requiring shop drawings, erection drawings showing panel lengths, splice locations, rail post spacing and anchor bolt setting shall be submitted to the Area Engineer for approval.

Shop drawings may be submitted as 11" x 17" prints provided they are clearly legible.

Exposed edges of handrail and handrail posts shall be rounded or chamfered to approximately 1/16" by grinding.

Average weight of railing is 30 plf.

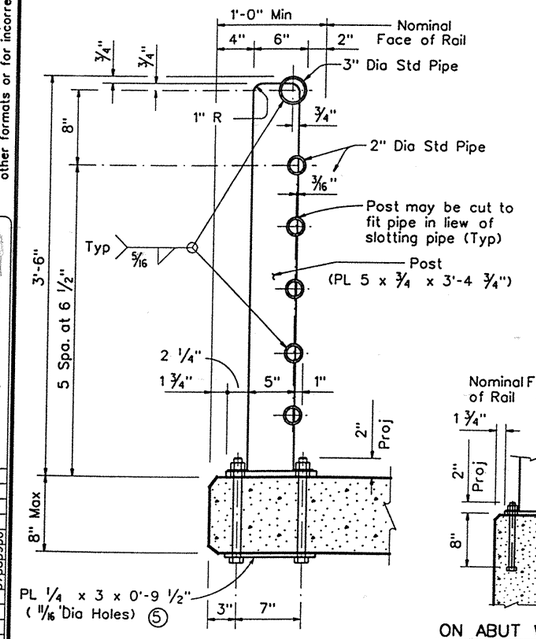

BASIC CONDITION

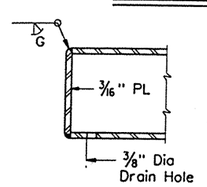

RAIL CAP DETAIL

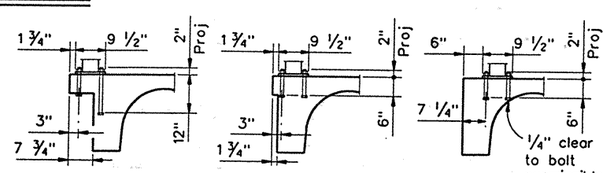

CG (PAN FORM)

⑥ For CIP slabs under 6" add PL ⑤ (tack weld to bolt heads) and an additional longitudinal #4 bar as shown (included as part of rail for payment).

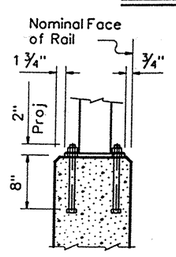

ON ABUT WING OR CIP RETAINING WALL

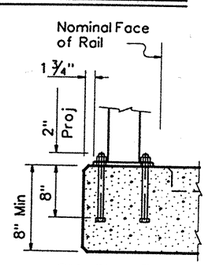

ON CULVERTS OR SLABS OVER 8" THICK

POST MOUNTING DETAILS

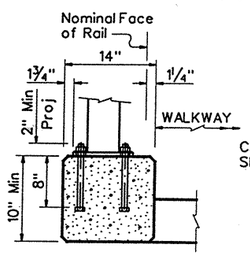

WALKWAY

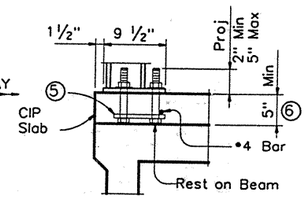

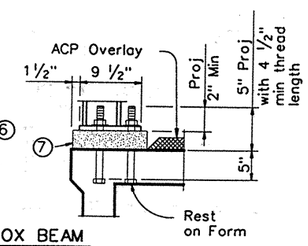

BOX BEAM

⑦ A 6" x 9 1/2" min x 3" max thickness grout pad may be used under the rail post base plate to adjust the rail for vertical grade and box beam camber.

STATE OF TEXAS
DERRON S. VINCIK
84028
REGISTERED PROFESSIONAL ENGINEER

The seal appearing on this document was authorized by Derron S. Vincik P.E. 84028, on April 2, 1999.

Texas Department of Transportation
Design Division (Bridge)

PEDESTRIAN RAIL

TYPE PR1 (MOD)

FILE: d34sdx09.dgn	DN: THD	CK: THD	DW: DRG	CK: LDS	NEG: B583
©TxDOT January 1996	DIST	FED. REG	FEDERAL AID PROJECT		SHEET
REVISIONS	22	6	C86-14-23		363

COUNTY	CONTROL	SECT	JOB	HIGHWAY
WEBB	0086	14	023	LP20

DISCLAIMER:
The use of this standard is governed by the "Texas Engineering Practice Act". No warranty of any kind is made by TxDOT for any purpose whatsoever. TxDOT assumes no responsibility for the conversion of this standard to other formats or for incorrect results or damages resulting from its use.

ACC: (LV=1.2 for English; 1.3 for Metric) KB

LEVELS DISPLAYED: 1 12 33 34 35 36 37 38 39 40 41 42 43 44 45 46 57 58 59 60

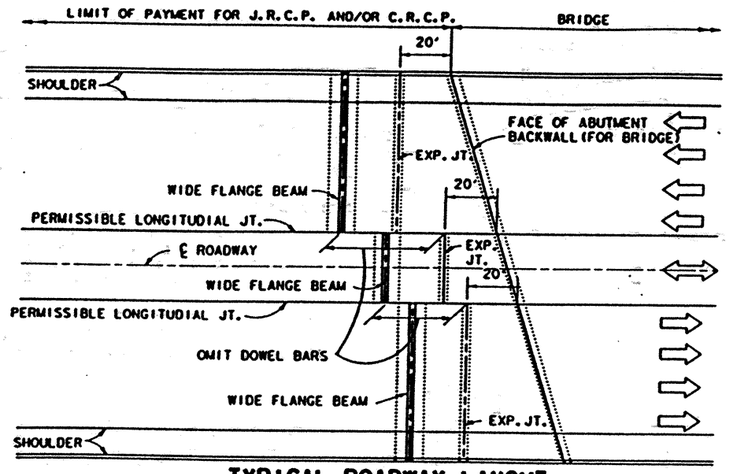

TYPICAL ROADWAY LAYOUT
CONCRETE MEDIAN AND SHOULDERS
(AT BRIDGES)

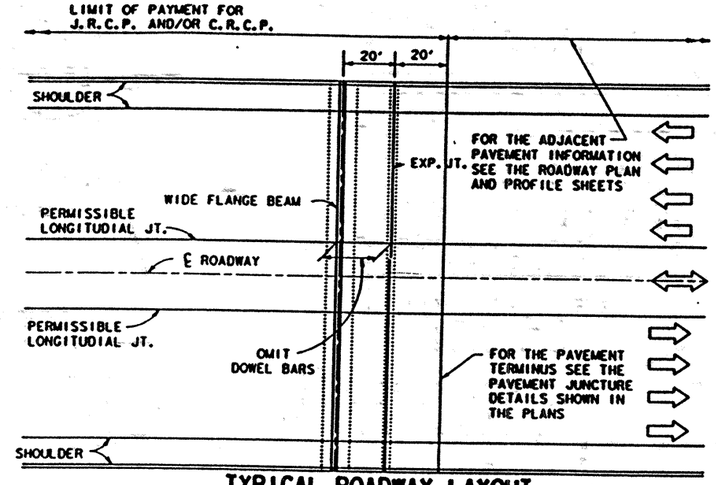

TYPICAL ROADWAY LAYOUT
CONCRETE MEDIAN AND SHOULDERS

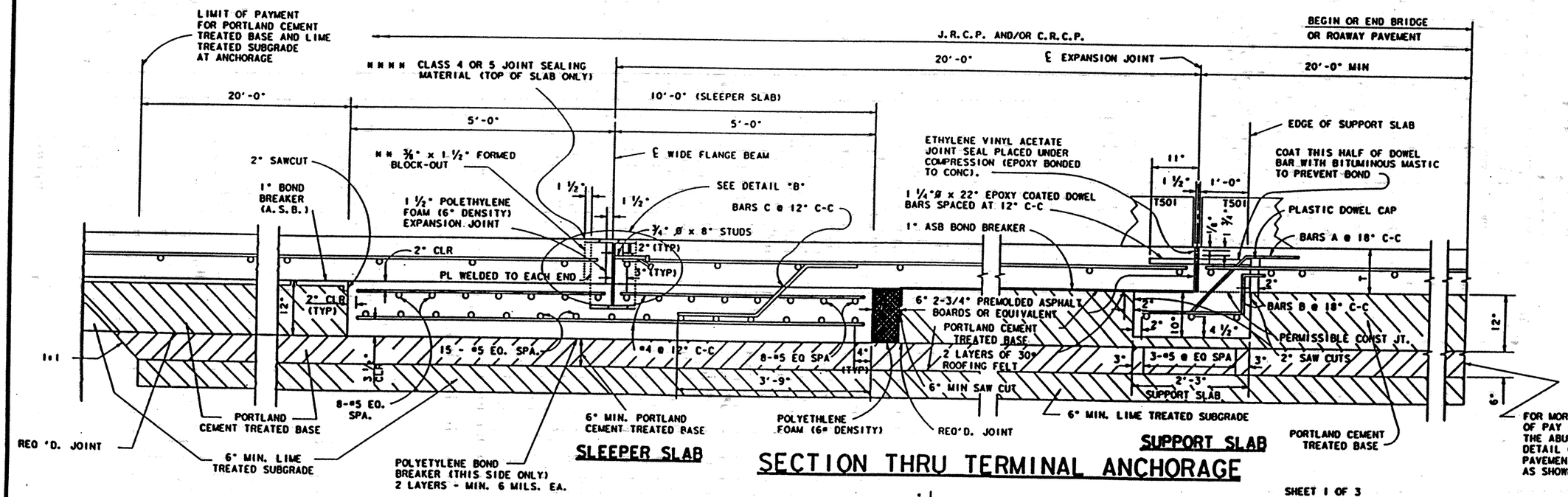

FOR MORE DETAILS AND LIMITS OF PAY FOR PCT BASE & LTS SEE THE ABUTMENT BACKFILL DIAGRAM DETAIL ON SHEET 2 OF 2 OR THE PAVEMENT JUNCTURE DETAILS AS SHOWN IN PLANS.

SECTION THRU TERMINAL ANCHORAGE

NOTE

1. BLOCK-OUT REQUIRED AT EACH END OF WIDE FLANGE BEAM ADJACENT TO 3/8" END PLATE WHERE BLOCK-OUT IS PLACED ABUTTING CONCRETE PAVEMENT, RIPRAP OR STAB. BASE. THE BLOCKED OUT AREA SHALL BE FILLED WITH POLYETHYLENE FOAM (6# DENSITY).
2. FOR ADDITIONAL DETAILS ON REINFORCEMENT MEMBER QUANTITIES AND THE WIDE FLANGE BEAM SEE SHEET 2 OF 2.

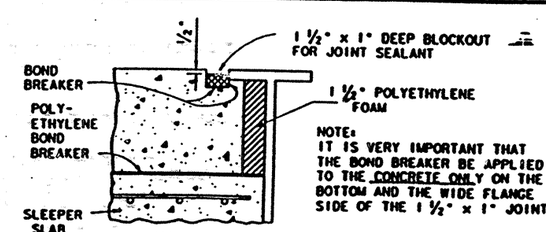

NOTE:
IT IS VERY IMPORTANT THAT THE BOND BREAKER BE APPLIED TO THE CONCRETE ONLY ON THE BOTTOM AND THE WIDE FLANGE SIDE OF THE 1 1/2" x 1" JOINT.

DETAIL "B"

SHEET 1 OF 3

REV. 10/91 ADD USE FOR BRIDGE ANCHORAGE
REV. 10/94 ADD FLANGE BLOCKOUT DETAIL, AND ADD ADDITIONAL NOTES AND SPECIFICATIONS
REV. 5/95 ADDED LAYOUT FOR ONRY USE, ADDITIONAL CSB LAYER, LTS LAYER, CHANGED TO TROWF DEFINEDC, CHANGED JOINT SEAL MATERIAL TO CLASS 4 OR 5
REV. 5/95 MISC. CHANGES TO DETAIL & AND OTHER LABELS.
REV. 11/95 UPDATED TO PDSS SPECS.
REV. 4/96 ADDED A TOOLED CHECK-REMOVAL ANCHOR JOINT AT RETAINING WALL DETAIL.
THIS SHEET OF SHEET 1 OF 1
REV. 4/96 ADDED DEPTHOMAT NOTE TO THE BOTTOM BLOCK.

TEXAS DEPARTMENT OF TRANSPORTATION
LAREDO DISTRICT
© 1996 TxDOT
CONTINUOUSLY & JOINTED REINFORCED CONCRETE PAVEMENT DETAILS
WIDE FLANGE TERMINAL ANCHORAGE SYSTEM
(FOR USE AT BRIDGE END OR PAVEMENT TERMINUS)

DN	DRAWING	DATE JAN., 199	FED. RD. DIV. NO.	STATE	FEDERAL AID PROJECT NO.
CK DN			6	TEXAS	
DR				COUNTY	
CK DR					
DS					
CK DS					

LRD WEBB 1-13-97 LP 20

SHEET 364

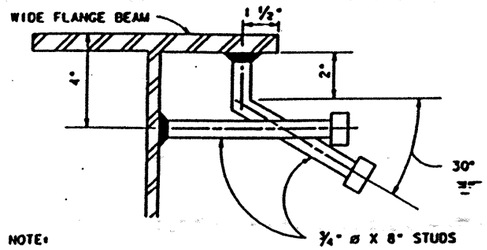

NOTE:

STUDS SHALL BE ELECTRIC ARC END WELDED WITH COMPLETE FUSION. ANY STUD WHICH IS DISLODGED IN SHIPPING OR CAN BE DISLODGED BY HAMMER SHALL BE REPLACED.

DETAIL A

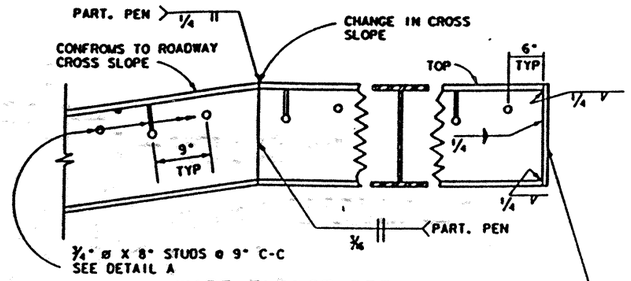

WIDE FLANGE DETAIL

3/16" PLATE WELDED TO EACH END OF WIDE FLANGE BEAM AT PAVEMENT EDGES ONLY. SHAPE TO FIT CONFIGURATION OF END OF WIDE FLANGE BEAM.

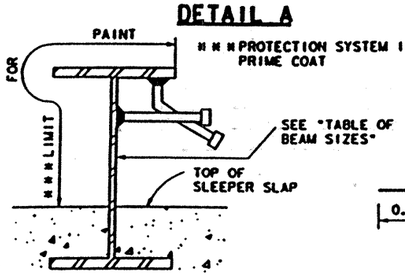

WIDE FLANGE PAINTING DETAIL

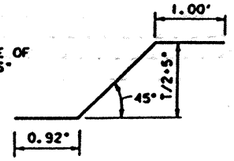

BARS A

(#4)

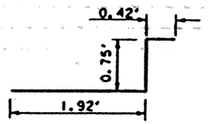

BARS B

(#4)

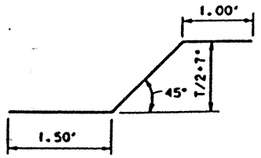

BARS C

(#4)

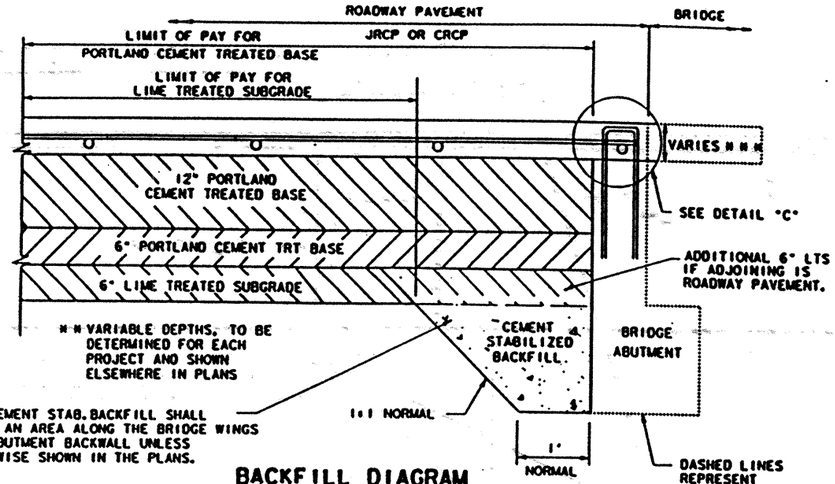

NOTE:

THE CEMENT STAB. BACKFILL SHALL COVER AN AREA ALONG THE BRIDGE WINGS AND ABUTMENT BACKWALL UNLESS OTHERWISE SHOWN IN THE PLANS.

BACKFILL DIAGRAM

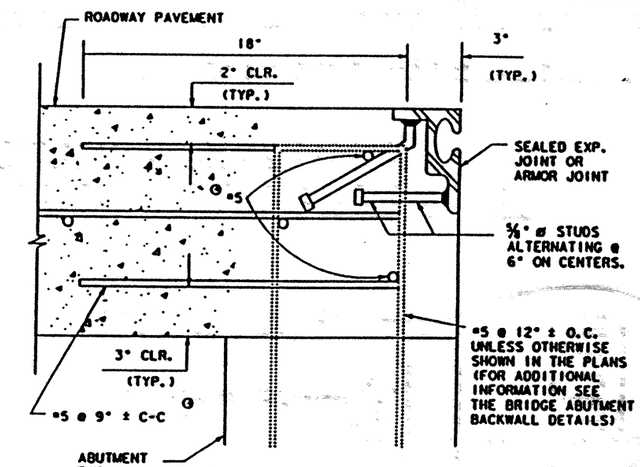

DETAIL C

(SHOWING ADDITIONAL REINFORCEMENT FOR ROADWAY PAVEMENT WITH SEALED EXPANSION JOINTS OR ARMOR JOINTS AT ABUTMENTS.)

ESTIMATED QUANTITIES

	ITEM	PAVEMENT THICKNESS (INCHES) 8	9	10	11	12	13	14	15
SLEEPER SLAP	CONC (WIDE FLNG ANCH)	0.37 CY/LF	0.37 CY/LF	0.37 CY/LF	0.37 CY/LF	0.37 CY/LF	0.37 CY/LF	0.37 CY/LF	0.37 CY/LF
	REINF STL (WIDE FLNG ANCH)	49.0 LBS/LF	49.1 LBS/LF	49.2 LBS/LF	49.3 LBS/LF	49.5 LBS/LF	49.6 LBS/LF	49.7 LBS/LF	49.8 LBS/LF
SUPPORT SLAP	CONC (WIDE FLNG ANCH)	0.07 CY/LF	0.07 CY/LF	0.07 CY/LF	0.07 CY/LF	0.07 CY/LF	0.07 CY/LF	0.07 CY/LF	0.07 CY/LF
	REINF STL (WIDE FLNG ANCH)	6.2 LBS/LF	6.3 LBS/LF	6.3 LBS/LF	6.4 LBS/LF	6.5 LBS/LF	6.5 LBS/LF	6.6 LBS/LF	6.6 LBS/LF
	EXCAV (WIDE FLNG ANCH)	2.41 CY/LF	2.41 CY/LF	2.41 CY/LF	2.41 CY/LF	2.41 CY/LF	2.41 CY/LF	2.41 CY/LF	2.41 CY/LF
	STR STL (HYC)	* 69.51 LBS/LF +2 PLATES @ 14.87 LBS EA	* 69.51 LBS/LF +2 PLATES @ 14.87 LBS EA	* 90.51 LBS/LF +2 PLATES @ 18.46 LBS EA	* 90.51 LBS/LF +2 PLATES @ 18.46 LBS EA	* 98.51 LBS/LF +2 PLATES @ 22.01 LBS EA	* 98.51 LBS/LF +2 PLATES @ 22.01 LBS EA	* 112.51 LBS/LF +2 PLATES @ 28.27 LBS EA	* 112.51 LBS/LF +2 PLATES @ 28.27 LBS EA
SEE NOTE 8	PORTLAND CMT TRTD BASE	3.128 CY/LF	3.128 CY/LF	3.128 CY/LF	3.128 CY/LF	3.128 CY/LF	3.128 CY/LF	3.128 CY/LF	3.128 CY/LF
	LIME TREATED SUBGRADE	7.22 SY/LF	7.22 SY/LF	7.22 SY/LF	7.22 SY/LF	7.22 SY/LF	7.22 SY/LF	7.22 SY/LF	7.22 SY/LF
	LIME	0.10 TON/LF	0.10 TON/LF	0.10 TON/LF	0.10 TON/LF	0.10 TON/LF	0.10 TON/LF	0.10 TON/LF	0.10 TON/LF

* INCLUDES WEIGHT OF WIDE FLANGE BEAM AND STUDS

TABLE OF BEAM SIZES

PAVEMENT THICKNESS	WIDE FLANGE BEAM DESIGNATION
8"	W18 X 68
9"	W14 X 68
10"	W16 X 89
11"	W16 X 89
12"	W18 X 97
13"	W18 X 97
14"	W21 X111
15"	W21 X111

NOTES:

1. POLYETHYLENE FOAM (6# DENSITY), SAW CUTS, EXPANSION JOINTS, EPOXY COATED DOWEL BARS, AND EXPANSION JOINT MATERIALS WILL NOT BE PAID FOR DIRECTLY, BUT SHALL BE CONSIDERED INCIDENTAL TO THE ITEM "CONCRETE PAVEMENT".
2. SUPPORT SLAB AND SLEEPER SLAB SHALL BE PAID FOR IN ACCORDANCE WITH SPECIAL SPECIFICATION ITEM "WIDE FLANGE TERMINAL ANCHORAGE SYSTEM".
3. WIDE FLANGE BEAM SHALL BE PAID FOR IN ACCORDANCE WITH ITEM "METAL FOR STRUCTURES".
4. SHEAR CUTTING OF DOWEL BARS IS PROHIBITED.
5. DOWEL BAR EPOXY COATING SHALL CONFORM TO THE SECTION "EPOXY COATING OF REINFORCING STEEL" UNDER ITEM "REINFORCING STEEL".
6. JOINT SEAL MATERIAL MEETS ASTM D-1056. "STANDARD SPECIFICATION FOR FLEXIBLE CELLULAR MATERIALS-SPONGE OR EXPANDED RUBBER" AS GRADE 282.
7. CEMENT STABILIZED BACKFILL IS REQUIRED AT ALL ABUTMENTS.
8. QUANTITIES SHOWN ARE BASED ON ALL JOINTS BEING NORMAL TO THE PAVEMENT. FOR SKEWED JOINTS THE QUANTITIES MUST BE ADJUSTED.
9. THE PLACEMENT OF PORTLAND CEMENT TREATED BASE VARIES FROM 6" TO 18" WITHIN THE WIDE FLANGE ANCHORAGE SYSTEM AND THIS REQUIRES THAT PAYMENT BE MADE OF THE STRENGTH, FLEXIBLE BASE TYPE, GRADE, COMPACTION METHOD SPECIFIED AT CLASS 6 MEASUREMENT AND PAYMENT OF "VARIABLE DEPTH".
10. THIS STANDARD WILL BE USED WITH THE SPECIAL SPECIFICATION "WIDE FLANGE TERMINAL ANCHORAGE SYSTEM".

* THE ADDITIONAL STEEL REQUIRED BY THE ABOVE DETAIL "C" SHALL NOT BE PAID FOR DIRECTLY, BUT SHALL BE INCLUDED IN THE PAYMENT OF ITEMS FOR CONCRETE PAVEMENT.

SHEET 2 OF 3

TEXAS DEPARTMENT OF TRANSPORTATION
LAREDO DISTRICT

© 1998 TxDOT

CONTINUOUSLY & JOINTED REINFORCED CONCRETE PAVEMENT DETAILS

WIDE FLANGE TERMINAL ANCHORAGE SYSTEM

(FOR USE AT BRIDGE END OR PAVEMENT TERMINUS)

		JAN., 1998	6	STATE TEXAS	
				COUNTY WEBB	

365

S10-8-98

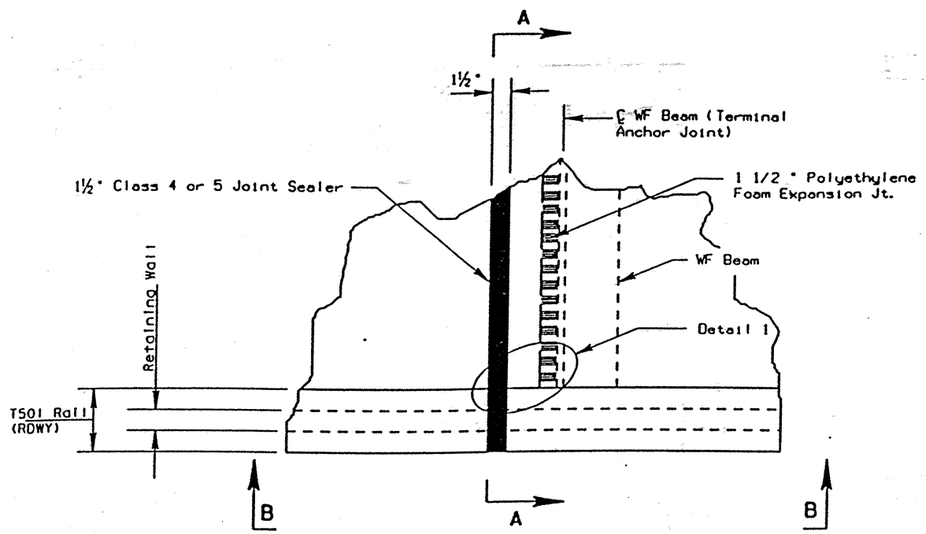

PLAN

TERMINAL ANCHOR JOINT AT RETAINING WALL

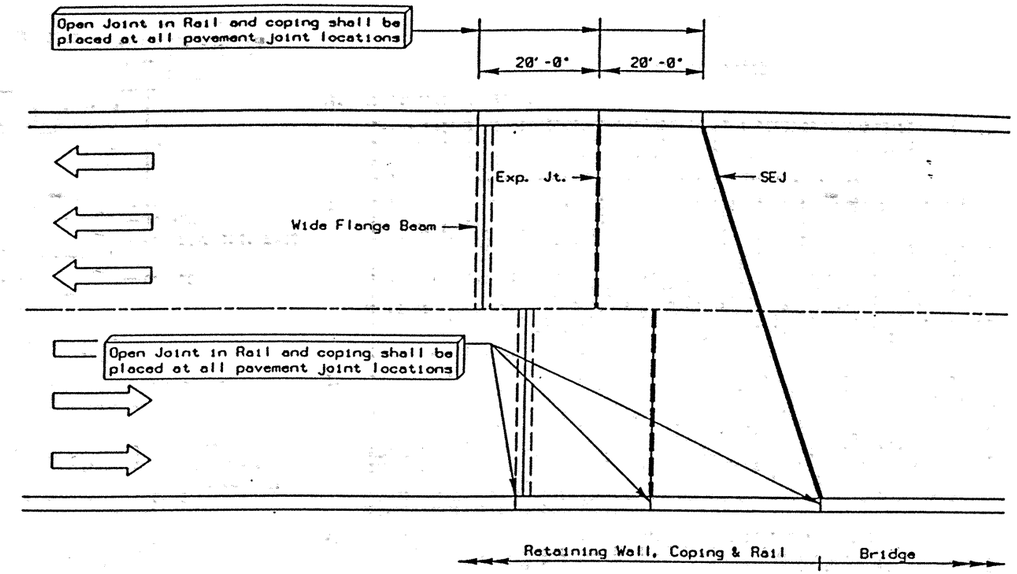

TYPICAL ROADWAY LAYOUT

BETWEEN RETAINING WALLS AT BRIDGES

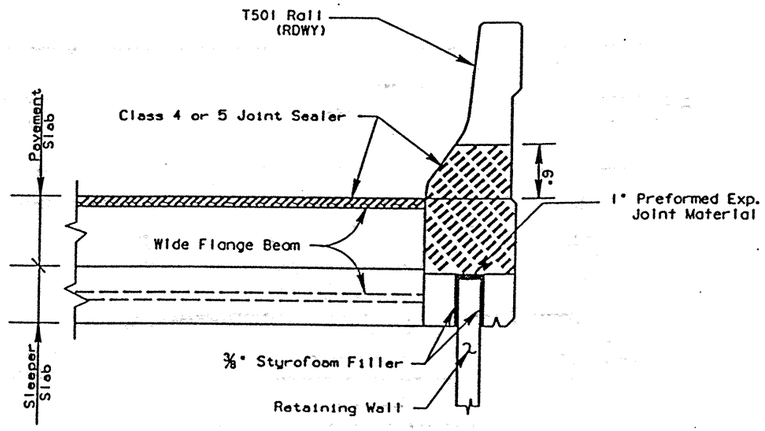

SECTION "A-A"

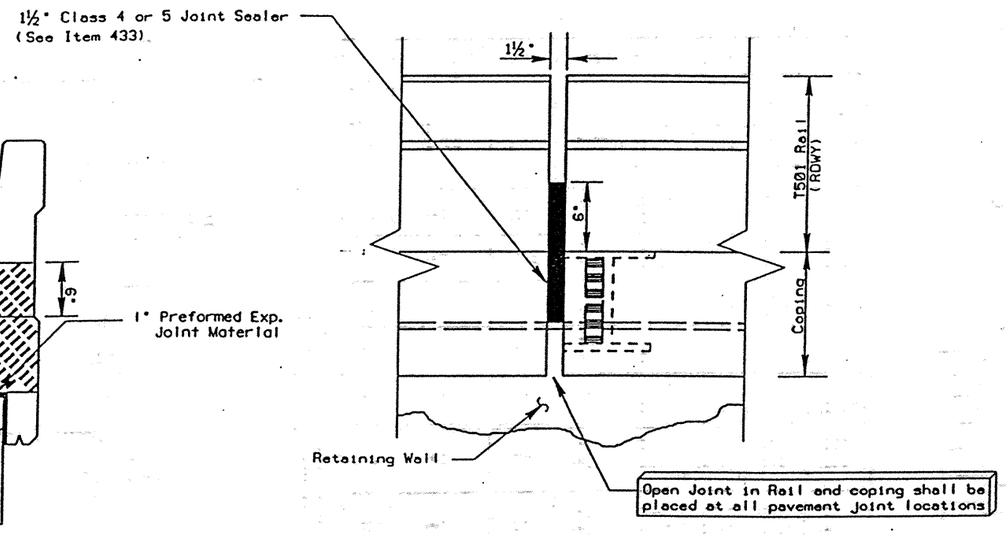

SECTION "B-B"

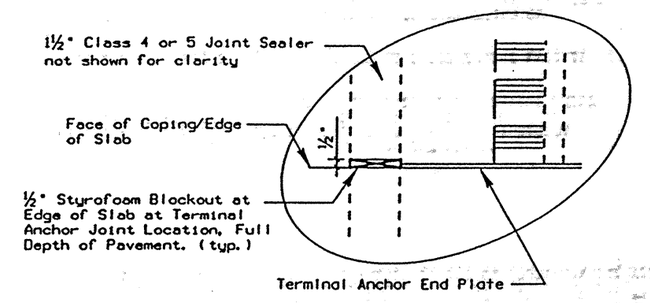

DETAIL 1

Not to scale

SHEET 3 OF 3

REVISIONS
ADDED TO WIDE FLANGE ANCHORAGE SYSTEM STD. SHEET 1 OF 3.
REV 6/98
ADDED COPYRIGHT INFO TO THE TITLE BLOCK.

TEXAS DEPARTMENT OF TRANSPORTATION
LAREDO DISTRICT

© 1998 TxDOT

TERMINAL ANCHOR JOINT AT RETAINING WALL DETAIL

DN LBJ	DRAWING	DATE	FED. RD. DIV. NO.	STATE	FEDERAL AID PROJECT NO.		HIGHWAY NO.
CK DN JPV		3/26/98	6	TEXAS			366
DW LBJ							
CK DW JPV				COUNTY			
TR							
CK TR			LAD	WEBB	0086	14 023	LP20

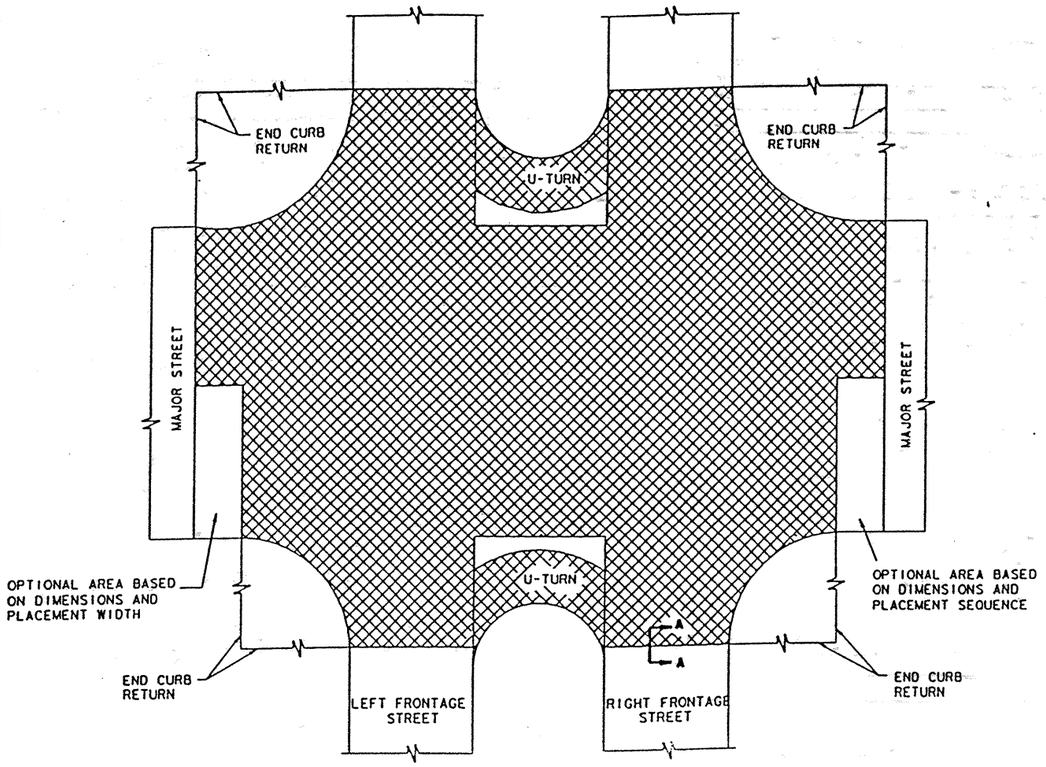

FIGURE 2

INTERSECTION OF MAJOR STREET WITH FRONTAGE STREET

FAST TRACK PAVING AREA

TYPICAL PAVING PLANS

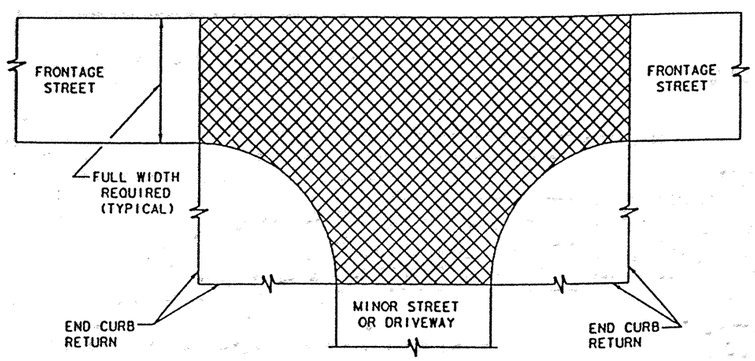

FIGURE 3

INTERSECTION OF MINOR STREET OR DRIVEWAY WITH FRONTAGE STREET

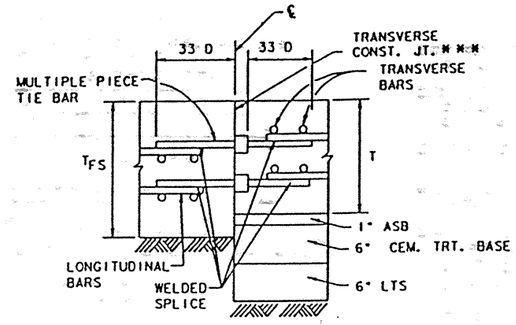

DOUBLE MAT

* * * SEE JOINT SEALING DETAILS ON CRCP STANDARDS

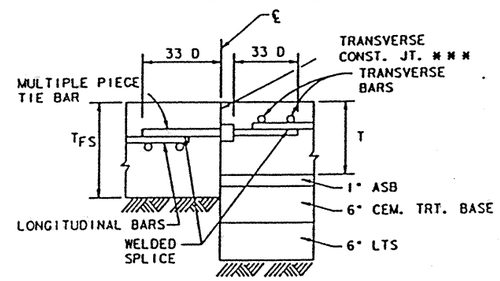

SINGLE MAT

TRANSVERSE CONSTRUCTION JOINTS

SECTION A - A
FIGURE 1

TABLE 2

	SLAB THK. "T_{FS}" (IN.)	LONGITUDINAL REINFORCING		① TRANSVERSE REINFORCING				
		BAR SIZE	SPACING C (IN.)	BAR SIZE	MAXIMUM ALLOWABLE PAVEMENT WIDTH (W) (FT.) FOR GIVEN TRANSVERSE STEEL SPACING (B_S) * * * 12"	24"	36"	$B_S W$ (FT.^{2})
SINGLE MAT REINFORCING	11"	#7	9"	#5 #6	235' 333'	117' 167'	78' 111'	235 333
	12"	#7	9.5"	#5 #6	215' 305'	107' 152'	72' 101'	215 305
	13"	#7	8.5"	#5 #6	198' 282'	99' 141'	66' 94'	198' 282
	14"	#7	7"	#5 #6	184' 260'	92' 130'	61' 86'	184 260'
	15"	#7	6"	#5 #6	172' 244'	86' 122'	57' 81'	172' 243'
DOUBLE MAT REINFORCING	14"	#5	7"	#5 #6	368' 520'	184' 260'	122' 172'	368 520
	15"	#6	9"	#5 #6	344' 488'	172' 244'	114' 162'	344 488

* WITH BASE STRUCTURE OF 1" ASPHALT TREATED BASE, 6" CEMENT TREATED BASE, 6" LIME TREATED SUBGRADE

* * ON AS CUT SUBGRADE

GENERAL NOTES

1. DEFINITION OF TERMS

   T_{FS} - FAST TRACK CONCRETE PAVING DEPTH AT INTERSECTIONS AND LEAVE OUTS. FAST TRACK CONCRETE PAVING DEPTH TO BE DETERMINED FROM TABLE 1 AND NOMINAL CONCRETE PAVING DEPTH "T" SHOWN IN THE PLANS.
   T - NOMINAL CONCRETE PAVING DEPTH AS SHOWN IN THE PLANS.

2. THE SAME LONGITUDINAL AND TRANSVERSE BAR SPACING SHALL BE USED FOR THE FAST TRACK PAVING AREA AS THAT USED FOR THE ADJACENT CONCRETE PAVING DEPTH "T". LONGITUDINAL AND TRANSVERSE BAR SIZE AND SPACING REQUIREMENTS ARE INDICATED IN TABLE 2. THE LONGITUDINAL AND TRANSVERSE BARS FOR THE FAST TRACK PAVING AREA SHALL BE PLACED AT THE HORIZONTAL PLANE ELEVATION THAT IS TWO TIE-BAR DIAMETERS LOWER THAN THAT FOR THE ADJACENT CONCRETE PAVEMENT DEPTH "T", AS SHOWN IN FIGURE 1. SINGLE MAT STEEL SHALL BE USED IN THOSE FAST TRACK PAVING AREAS ADJACENT TO PAVEMENT SLABS WITH SINGLE MAT REINFORCEMENT, DOUBLE MAT STEEL SHALL BE USED IN THOSE FAST TRACK PAVING AREAS ADJACENT TO PAVEMENT SLABS WITH DOUBLE MAT REINFORCEMENT.

3. THE REQUIRED FAST TRACK PAVING AREAS WILL BE SHOWN ON THE PLANS. THE CONTRACTOR HAS THE OPTION TO UTILIZE FAST TRACK CONCRETE PAVING AT U-TURNS, AT INTERSECTIONS, AT MINOR STREETS, AND AT DRIVEWAYS WITH FRONTAGE ROAD LEAVE-OUT AREAS THAT ARE NOT SHOWN ON THE PLANS, PROVIDED PRIOR WRITTEN APPROVAL IS RECEIVED FROM THE ENGINEER. TYPICAL PAVING PLANS FOR THE INTERSECTION OF A MAJOR STREET WITH THE FRONTAGE ROAD ARE SHOWN AS FIGURE 2, AND FOR THE INTERSECTION OF A MINOR STREET OR DRIVEWAY WITH THE FRONTAGE ROAD AS FIGURE 3. FAST TRACK PAVING WIDTH FOR THE FRONTAGE ROAD SHALL BE FOR THE FULL FRONTAGE ROAD WIDTH AND PLACED IN STAGES AS REQUIRED.

4. ADDITIONAL STEEL BARS (DIAMETER "D") SHALL BE THE SAME SIZE AS LONGITUDINAL BARS AND SHALL BE SPACED MIDWAY BETWEEN ALTERNATE LONGITUDINAL BARS ALONG THE TRANSVERSE CONSTRUCTION JOINT FORMED AT THE FAST TRACK PAVING INTERFACE (T_{FS}) WITH THE ADJACENT PAVEMENT SLAB (T).

5. SPLICES SHALL BE A MINIMUM OF 33 TIMES THE NOMINAL STEEL DIAMETER ("D").

6. THE CONCRETE PLACEMENT DEPTH SHALL BE UNIFORM THROUGHOUT THE FAST TRACK CONCRETE PAVING AREA.

7. THE FAST TRACK CONCRETE REINFORCING BAR SPACING SHALL MATCH THAT USED FOR THE ADJACENT CRCP.

8. LONGITUDINAL TIE-BARS SHALL BE THE SAME SIZE DIAMETER AND SPACING AS THE LONGITUDINAL BAR. A SINGLE PIECE TIE-BAR MAY BE USED IF THE "33 D" TIE-BAR PROJECTION DOES NOT INTERFERE WITH THE SAFE HANDLING OF TRAFFIC.

9. THE DEPTH OF SAW CUTS FOR SAWED JOINTS SHALL BE BASED ON THE FAST TRACK CONCRETE PAVEMENT THICKNESS.

10. THIS STANDARD IS NOT INTENDED TO REPLACE OTHER STANDARDS EXCEPT WHERE SPECIFICALLY STATED HEREON. FOR PAVING DETAILS NOT SHOWN ON THIS DRAWING, REFERENCE IS MADE TO THE STANDARD SHEETS FOR CONTINUOUSLY REINFORCED CONCRETE PAVEMENT SHOWN ELSEWHERE IN THE PLANS.

① PAVEMENT WIDTH SHALL BE MEASURED AT RIGHT ANGLES TO THE CENTERLINE AND SHALL INCLUDE ALL FAST TRACK PAVEMENT AREAS THAT ARE TIED TOGETHER. TRANSVERSE STEEL REQUIREMENTS AND THE MAXIMUM ALLOWABLE PAVEMENT WIDTH WERE DETERMINED USING SUBGRADE DRAG THEORY (SEE APPENDIX F, SECTION 109 OF THE "HIGHWAY DESIGN DIVISION OPERATIONS AND PROCEDURES MANUAL") WITH A COEFFICIENT OF SLIDING RESISTANCE (F) OF 0.9 AND ALLOWABLE STEEL STRESS (F_S) OF 45.0 KSI.

TABLE 1

EQUIVALENT PAVEMENT THICKNESS	
T* (IN.)	T_{FS}** (IN.)
8"	11"
9"	12"
10"	13"
11"	14"
12"	15"

REVISION
REV. 11/93
REV. 7/96 REVISED TITLE BLOCK
REV. 5/98 CHANGED THE STD DESIGNATION TO HOU DIST FROM HOUSTON DISTRICT
REV 6/98 ADDED COPYRIGHT INFORMATION TO THE TITLE BLOCK.

TEXAS DEPARTMENT OF TRANSPORTATION
LAREDO DISTRICT

© 1998 TxDOT

FAST TRACK CONTINUOUSLY REINFORCED CONCRETE PAVEMENT DETAILS

CRCP-(FS)-92

DN	DRAWING	DATE	FED. RD. DIV. NO.	STATE	FEDERAL AID PROJECT NO.	SHEET NO.
CK. DN		7 / 92	6	TEXAS		367
DN				COUNTY		
CK. DN						
TR						
CK. TR						

LAR WEBB 1998 14 025 LAR

STD 8 - 6

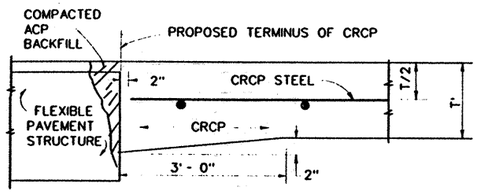

DETAIL FOR JUNCTURE WITH FLEXIBLE TYPE PAVEMENT STRUCTURE

NOTE: ADDITIONAL CONCRETE FOR THICKENED EDGE SHALL BE CONSIDERED INCIDENTAL TO VARIOUS BID ITEMS, DISTURBED MATERIAL IN THE FLEXIBLE PAVEMENT WILL BE BACKFILLED WITH ACP. THIS ACP WILL BE CONSIDERED INCIDENTAL TO VARIOUS BID ITEMS.

JUNCTURE A- CRCP WITH FLEXIBLE PAV.

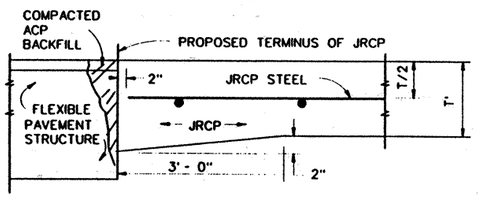

DETAIL FOR JUNCTURE WITH FLEXIBLE TYPE PAVEMENT STRUCTURE

NOTE: ADDITIONAL CONCRETE FOR THICKENED EDGE SHALL BE CONSIDERED INCIDENTAL TO VARIOUS BID ITEMS, DISTURBED MATERIAL IN THE FLEXIBLE PAVEMENT WILL BE BACKFILLED WITH ACP. THIS ACP WILL BE CONSIDERED INCIDENTAL TO VARIOUS BID ITEMS.

JUNCTURE B - JRCP WITH FLEXIBLE PAV.

DOWEL BAR DATA			
SLAB THICKNESS	8"	9"	10" THRU 15"
DOWEL SIZE	1"	1 1/8"	1 1/4"
DOWEL LENGTH	18"	20"	22"
DOWEL BAR SPACING	12"	12"	12"

TABLE A - DOWEL BAR DATA

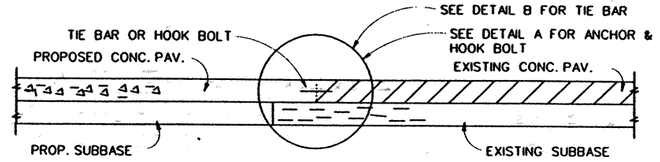

JUNCTURE C - UNIFORM DEPTH CONCRETE CRCP WITH CRCP (HOOK BOLT) OR CRCP WITH JRCP OR JRCP WITH JRCP

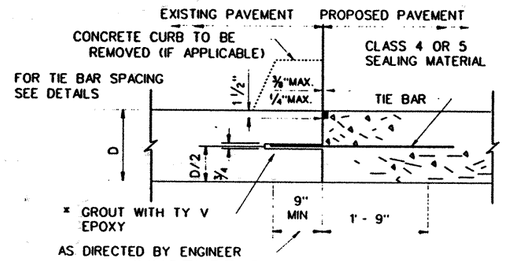

JUNCTURE D - TYPICAL CONNECTION TO EXISTING CONCRETE

* TY VII EPOXY MAY BE REQUIRED IF, IN THE OPINION OF THE ENGINEER, TY V IS TOO FLUID

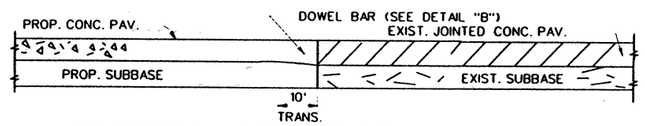

JUNCTURE E - VARIABLE DEPTH CONCRETE CRCP WITH JRCP

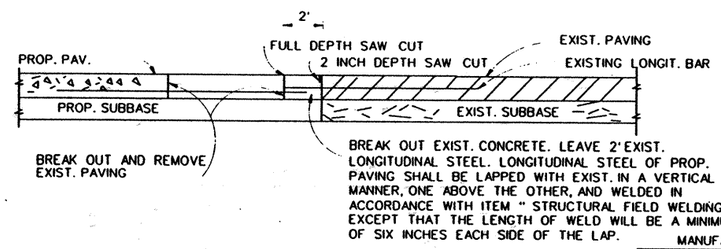

JUNCTURE F - "BREAK BACK" CONCRETE CRCP WITH CRCP OR JRCP WITH JRCP

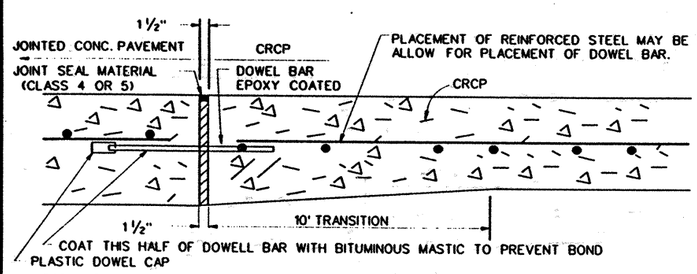

FOR DETAILS NOT SHOWN SEE TRANSVERSE EXPANSION JOINT DETAILS ELSEWHERE IN PLANS.

DETAIL "B" - DOWEL ASSEMBLY AT EXPANSION JOINT

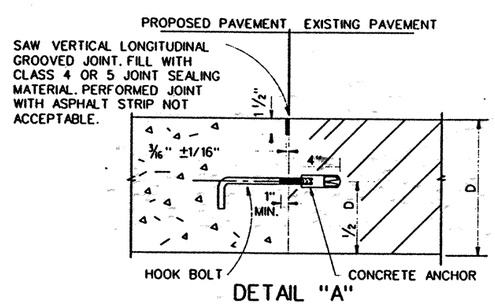

DETAIL "A"

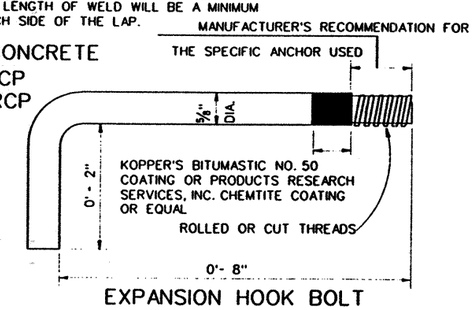

EXPANSION HOOK BOLT

GENERAL NOTES

1. FOR FURTHER INFORMATION REGARDING THE PLACEMENT OF CONCRETE AND REINFORCEMENT REFER TO THE GOVERNING SPECIFICATION FOR CONCRETE PAVEMENT.
2. THE DESIGN REQUIREMENTS FOR THE PAVEMENT STRUCTURE, I.E. BAR SPACING, BAR SIZE LAP REQUIREMENTS, ETC., SHALL BE AS SHOWN ON THE APPROPRIATE PAVEMENT DESIGN DETAIL.
3. SLEEPER SLAB AND ADDITIONAL REINFORCING REQUIRED HEREON SHALL BE CONSIDERED INCIDENTAL TO THE VARIOUS BID ITEMS.
4. WHERE USED THE SIZE, SPACING AND LENGTH OF DOWEL BARS SHALL BE AS SHOWN IN TABLE "A".
5. WHERE THERE IS TO BE A JUNCTURE AND ADDITIONAL JRCP PAVING IS TO BE PLACED AT A FUTURE DATE, MULTIPLE PIECE DOWEL WILL BE PERMITTED AT THE JUNCTURE. THE MULTIPLE PIECE DOWEL BAR ASSEMBLIES SHALL HAVE A MINIMUM ULTIMATE TENSILE STRENGTH OF 50.0 KIPS AND SHALL BE SMOOTH EPOXY COATED BARS. THE MULTIPLE PIECE DOWEL BAR ASSEMBLIES SHALL HAVE A STOP TYPE COUPLINGS AND SHALL HAVE ROLLED THREADS ON THE BARS. THE BAR SHALL BE DISMANTLED AND THE COUPLING PORTION USED IN CONSTRUCTION SHALL BE FITTED WITH A PLASTIC CAP. THE REMAINING PORTION OF THE BAR SHALL BE FURNISHED TO THE ENGINEER.
6. WHERE THE PAVING IS CRCP AND A RAMP COMPOSED OF A FLEXIBLE PAVEMENT IS TO BE USED AT THE JUNCTURE UNTIL FUTURE PAVING IS CONSTRUCTED, MULTIPLE PIECE TIE BARS MAY BE USED IF PERMITTED BY THE ENGINEER. IF USED, THE MULTIPLE PIECE TIE BAR ASSEMBLIES SHALL HAVE STOP TYPE COUPLINGS AND SHALL HAVE ROLLED THREADS ON THE BARS. THE MULTIPLE PIECE TIE BAR ASSEMBLIES SHALL DEVELOP A MINIMUM ULTIMATE TENSILE STRENGTH EQUAL TO 1-1/2 TIMES THE YIELD STRENGTH OF THE TRANSVERSE BARS BEING JOINED. TIE BARS SHALL BE DEFORMED, REINFORCING BARS. TIE BAR ASSEMBLIES MADE FROM STEELS OTHER THAN ASTM GRADE 60 AND WITH DEFORMATIONS OTHER THAN ASTM STD. MAY BE USED PROVIDED THEY CAN BE PROVEN TO THE SATISFACTION OF THE ENGINEER THAT THEY ARE IN EVERY RESPECT THE EQUAL OF THE ASSEMBLIES SPECIFIED. LABORATORY TESTING OF THE PROPOSED ASSEMBLIES, AT THE CONTRACTOR'S EXPENSE, MAY BE REQUIRED. ONE PORTION OF THE TIE BAR ASSEMBLY(S) SHALL BE LAPPED AND WELDED TO EACH LONGITUDINAL BAR IN ACCORDANCE WITH ITEM "STRUCTURAL FIELD WELDING," THE OTHER PORTION INTO THE COUPLING PRIOR TO PAVING. MULTIPLE PIECE TIE BAR LENGTHS SHALL CONFORM TO THE TIE BAR LENGTHS SHOWN ELSEWHERE IN THE PLANS. ADDITIONAL "SHEAR STEEL" WILL ALSO BE REQUIRED AND MAY BE USED WITH MULTIPLE PIECE ASSEMBLIES AS PREVIOUSLY DESCRIBED. THE ADDITIONAL STEEL BARS WILL BE OF EQUAL DIAMETER AT A SPACING, DOUBLE THAT OF THE LONGITUDINAL STEEL AND THE LONGITUDINAL STEEL AND THE LENGTH SHALL BE 66 TIMES THE TIE BAR DIAMETER
7. SHEAR CUTTING DOWEL BARS IS PROHIBITED.
8. DOWEL BAR EPOXY COATING SHALL CONFORM TO ARTICLE 440.9 "EPOXY COATING OF REINFORCING STEEL."
9. ANY LONGITUDINAL REINFORCING WHICH IS OR HAS BEEN BENT SHALL BE REPLACED. IF THERE IS NOT SUFFICIENT EXPOSED REINFORCING TO PROVIDE A MINIMUM OF A 33 BAR DIAMETER LAP THAN THE EXISTING PAVEMENT SHALL BE REMOVED AND THE EXISTING REINFORCING SUFFICIENTLY EXPOSED TO PROVIDE A 33 BAR DIAMETER LAP ANY SHEAR BARS THAT ARE DISTURBED SHALL BE REPLACED BY DRILLING AND GROUTING AS REQUIRED BY NOTE 12 ON SHEET BELOW. THE CONTRACTOR SHALL BEAR THE ENTIRE EXPENSE FOR THIS CORRECTIVE ACTION.
10. TIE BARS AND DOWEL BARS OMITTED, LOST OR DAMAGED SHALL BE REPLACED BY DRILLING AND EPOXY GROUTING AT THE CONTRACTOR'S EXPENSE.
11. JUNCTURES A & B ARE ONLY SUITABLE FOR MINOR STREETS WITH LOW ADT'S, OTHERWISE THE PROPOSED CONCRETE PAVEMENT MUST BE ANCHORED PRIOR TO THE TERMINUS.
12. ADDITIONAL SHEAR BARS (DIAMETER "D") SHALL BE THE SAME SIZE AS LONGITUDINAL BARS AND SHALL BE SPACED MIDWAY BETWEEN ALTERNATE LONGITUDINAL BARS ALONG THE TRANSVERSE CONSTRUCTION JOINT FORMED AT THE LEAVE-OUT.

REVISIONS
REV. 6/9 NOTE 7
REV. 5/88 GROUT
REV. 9/93 UPDATED TO NEW SPECS. AND ADD REVISION BLOCK
REV. 9/92 ADDED CLASS OR & JT. SEAL, DOWEL CAP, BIT. MASTIC COATING AND NOTES 8,9,10,& 11 REVISE JUNCTURE B
REV. 6/98 ADDED COPYRIGHT INFORMATION TO THE TITLE BLOCK

© 1998 TxDOT

TEXAS DEPARTMENT OF TRANSPORTATION
LAREDO DISTRICT

CONCRETE PAVEMENT JUNCTURES

DN	DRAWN	DATE	CONT NO	STATE	FEDERAL AID PROJECT NO	HIGHWAY NO
CK DN			6	TEXAS		359
DW				COUNTY		
CK DW				WEBB		
TR						
CK TR						

SID B - 7

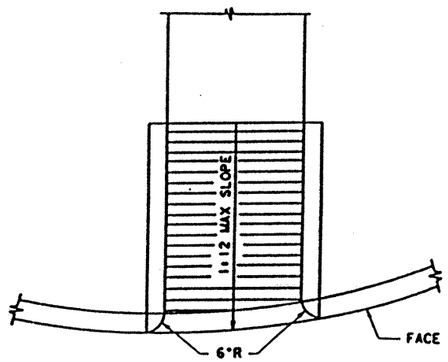

PLAN
TYPE A

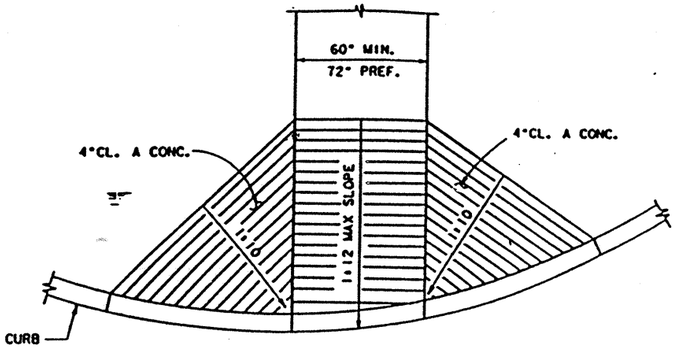

PLAN
TYPE B

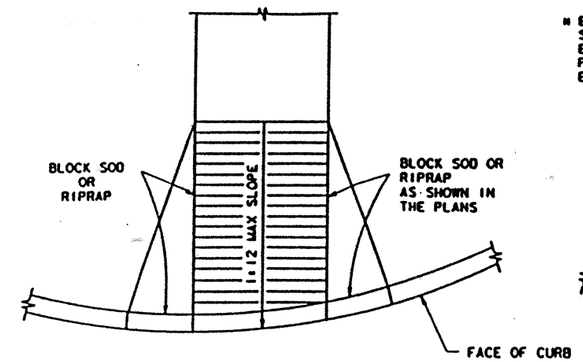

PLAN
TYPE C

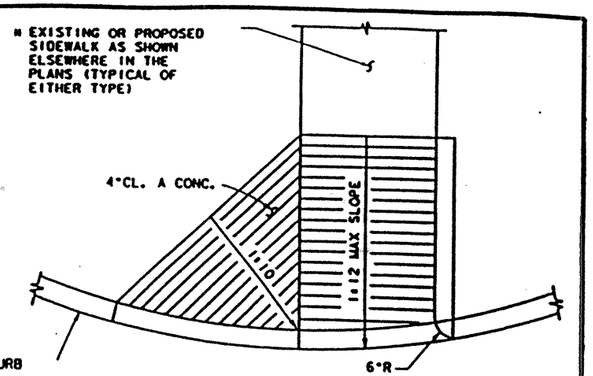

PLAN
TYPE AB

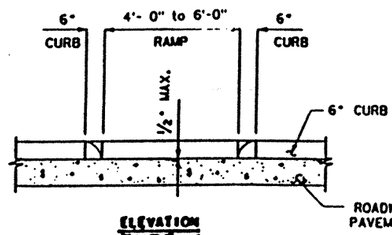

ELEVATION
TYPE A

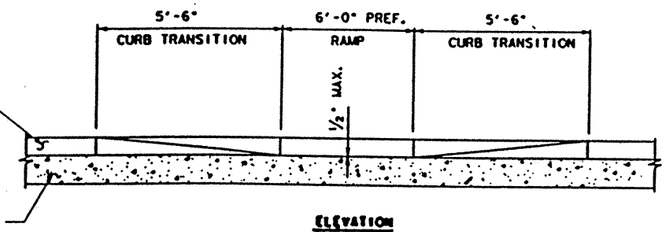

ELEVATION
TYPE B

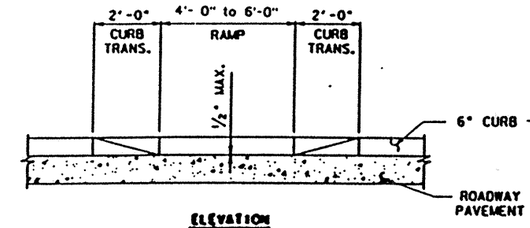

ELEVATION
TYPE C

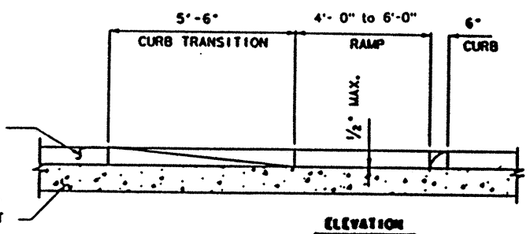

ELEVATION
TYPE AB

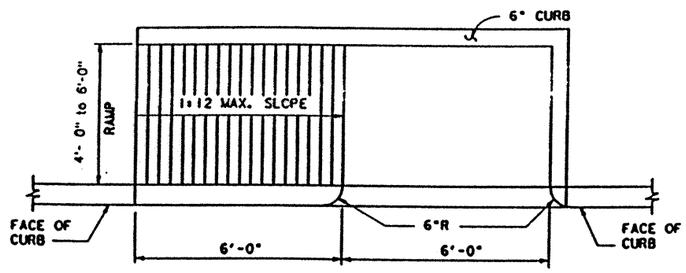

PLAN D

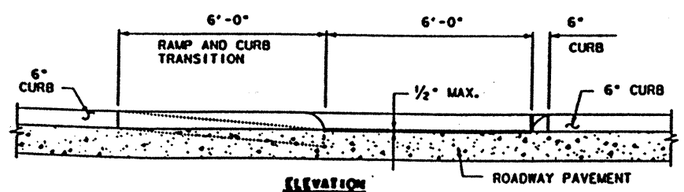

ELEVATION
TYPE D

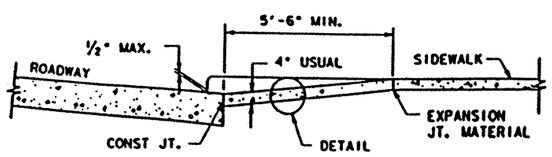

TYPICAL WHEELCHAIR RAMP SECTION
ALL TYPES

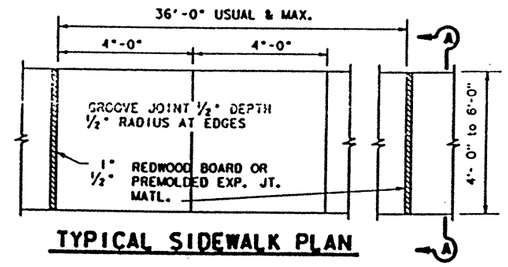

TYPICAL SIDEWALK PLAN

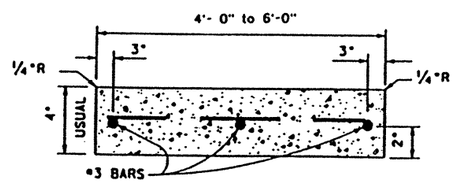

SECTION A-A

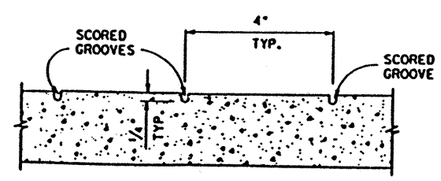

DETAIL

NOTES

1. WHEELCHAIR RAMPS SHALL MEET THE REQUIREMENTS OF THE ITEM "SIDEWALKS", AND SHALL BE PAID FOR UNDER THIS ITEM.
2. IF SIDEWALKS ARE NEITHER PROPOSED NOR EXISTING WHERE WHEELCHAIR RAMP ACCESS IS REQUIRED, CARE SHALL BE TAKEN TO ENSURE THAT AN ADEQUATE CONCRETE LANDING SURFACE IS PROVIDED TO REACH THE PEDESTRIAN SIGNALS. THE ADDITIONAL CONCRETE SHALL BE PAID FOR UNDER THE ITEM "SIDEWALKS" PER AREA OF THE DIMENSIONS SHOWN IN THE PLANS.
3. A MINIMUM PASSING SPACE OF 60" BY 60" MUST BE PROVIDED ALONG THE SIDEWALK AT REASONABLE INTERVALS NOT TO EXCEED 200 FEET.
4. CROSS SLOPES SHALL NOT EXCEED 1.50 (2 PERCENT).
5. BAR REINFORCING SHALL BE #3 BARS AT 18" MAXIMUM C-C SPACING IN BOTH DIRECTIONS.
6. WHERE SIDEWALKS ARE PLACED ADJACENT TO THE BACK OF CURB OR OTHER CONCRETE SURFACE, A 1" REDWOOD OR CYPRESS BOARD JT. OR 1/2" NON-EXTRUDING PREFORMED BITUMINOUS JOINT MATERIAL SHALL BE REQUIRED BETWEEN THE TWO SURFACES AND AT 36' (MAX.) INTERVALS FOR THE ENTIRE LENGTH OF SIDEWALK.
7. SIDEWALKS WHICH ARE DAMAGED DUE TO NECESSARY CONSTRUCTION OPERATIONS, SHALL BE REPLACED AND SHALL BE PAID FOR IN ACCORDANCE WITH THE APPROPRIATE BID ITEMS AS DETERMINED BY THE ENGINEER.
8. ALL WHEELCHAIR RAMPS SHALL BE ORIENTED SO THAT PEDESTRIANS ARE NOT DIRECTED TOWARDS THE CENTER OF THE INTERSECTION.

NOT TO SCALE

REVISIONS

TEXAS DEPARTMENT OF TRANSPORTATION
LAREDO DISTRICT

© 1998 TxDOT

WHEELCHAIR RAMP AND SIDEWALK DETAILS

DN	DRAWING	DATE	FED. RD. DIV. NO.	STATE	FEDERAL AID PROJECT NO.
CK DN	ORIGINAL	JAN. 93	6	TEXAS	CD 670-00-033
DR				COUNTY	
CK DR					
MS					
CK TR					

LRD WEBB

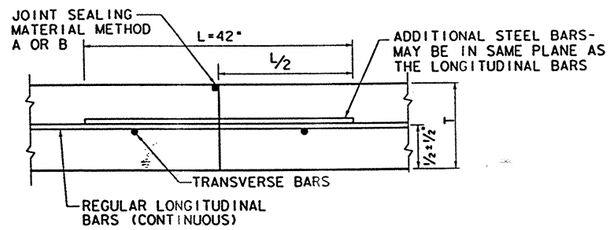

TRANSVERSE CONSTRUCTION JOINT
SECTION X - X

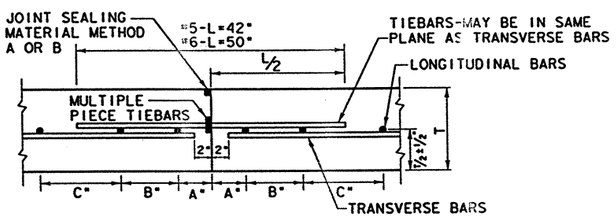

LONGITUDINAL CONSTRUCTION JOINT
SECTION Y - Y

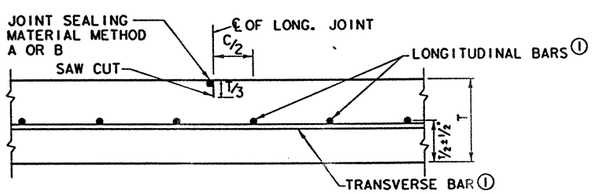

LONGITUDINAL CONTRACTION JOINT
SECTION Z - Z

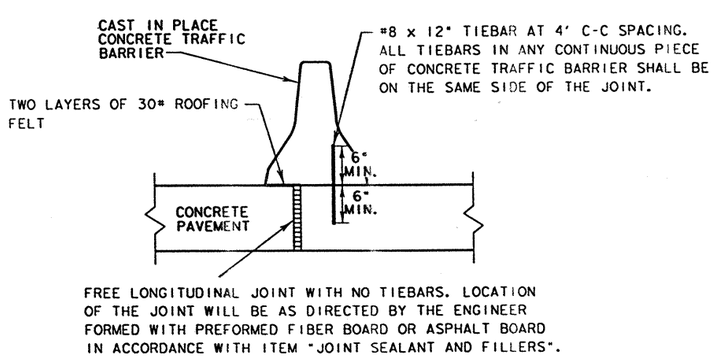

FREE LONGITUDINAL JOINT DETAIL

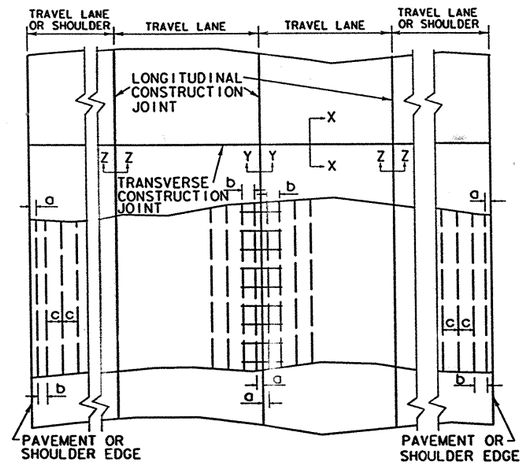

TYPICAL PAVEMENT LAYOUT

TABLE NO. 1 LONGITUDINAL STEEL						
LONGITUDINAL STEEL SIZE AND SPACINGS						
SLAB THICKNESS AND BAR SIZE		REGUALAR REINFORCEMENT	FIRST SPACING AT EDGE OR JOINT	SECOND SPACING FROM EDGE OR JOINT	ADDITIONAL REINFORCEMENT AT TRANSVERSE CONST. JOINT	
T INCHES	BAR NUMBER	SPACING "C" INCHES	SPACING "A" INCHES	SPACING "B" INCHES	SPACING 2 x C INCHES	LENGTH "L" INCHES
8	5	9	3 TO 4	3 TO 9	18	42
9	5	7.5	3 TO 4	3 TO 7.5	15	42
10	6	8.5	3 TO 4	3 TO 8.5	NONE	-
11	6	7	3 TO 4	3 TO 7	NONE	-
12	6	6	3 TO 4	3 TO 6	NONE	-
13	6	5.5	3 TO 4	3 TO 5.5	NONE	-

TABLE NO. 2 ALLOWABLE PAVEMENT WIDTH(W) IN FT. FOR TRANSVERSE BAR SPACING (Bs) NOT SHOWN USE FORMULAE.						
SLAB THICKNESS	8"	9"	10"	11"	12"	13"
#5 BAR AT 36"	62	55	50	45	41	38
#5 BAR AT 24"	93	83	74	68	62	57
#6 BAR AT 36"	88	78	70	64	59	54
#6 BAR AT 24"	126	117	105	96	88	81

TRANSVERSE STEEL AND TIEBAR SPACINGS SHALL BE BASED ON THE FOLLOWING FORMULAE.

FOR #5 BARS

$$W = \frac{17857\ N}{T\ Bs}$$

FOR #6 BARS

$$W = \frac{25346\ N}{T\ Bs}$$

W - ALLOWABLE WIDTH OF PAVEMENT SLAB WIDTH IN FEET (MEASURED EDGE TO EDGE OR EDGE TO UNTIED JOINT)
N - NUMBER OF LAYERS OF STEEL (1 OR 2)
T - THICKNESS OF SLAB IN INCHES
Bs - BAR SPACING IN INCHES

MAXIMUM Bs = 36"
MINIMUM Bs = 12"

GENERAL NOTES

1. FOR FURTHER INFORMATION REGARDING THE PLACEMENT OF CONCRETE AND REINFORCEMENT, REFER TO THE GOVERNING SPECIFICATIONS FOR "CONCRETE" AND "REINFORCING STEEL."
2. LONGITUDINAL AND TRANSVERSE BARS SHALL BE DEFORMED STEEL CONFORMING TO ASTM A-615 (GRADE 60) OR ASTM A-616 (GRADE 60).
3. DETAILS FOR PAVEMENT WIDTH, PAVEMENT THICKNESS AND THE CROWN CROSS-SLOPE SHALL BE SHOWN ELSEWHERE IN THE PLANS.
4. SPLICES SHALL BE A MINIMUM OF 33 TIMES THE NOMINAL STEEL DIAMETER.
5. CONSOLIDATION WITH HAND-MANIPULATED MECHANICAL VIBRATORS IS REQUIRED ADJACENT TO ALL TRANSVERSE CONSTRUCTION JOINTS.
6. THE DETAIL FOR THE JOINT SEALANT AND RESERVOIR WILL BE SHOWN IN CONCRETE PAVEMENT DETAIL, JOINT SEALANT.
7. PAVEMENT WIDTHS OF MORE THAN 16' SHALL HAVE A LONGITUDINAL JOINT (SECTION Z-Z OR Y-Y). THESE JOINTS SHALL BE LOCATED WITHIN 6" OF THE LANE LINE UNLESS THE JOINT LOCATION IS SHOWN ELSEWHERE ON THE PLANS.
8. THE SAW CUT FOR THE LONGITUDINAL JOINT SHALL BE ONE FOURTH THE SLAB THICKNESS WHEN CRUSHED LIMESTONE IS USED AS THE COARSE AGGREGATE.
9. WITHIN ANY AREA BOUNDED BY TWO FEET OF PAVEMENT LENGTH MEASURED PARALLEL TO THE CENTERLINE AND TWELVE FEET OF WIDTH MEASURED PERPENDICULAR TO THE PAVEMENT CENTERLINE, NOT OVER 33% OF THE REGULAR LONGITUDINAL STEEL SHALL BE SPLICED.
10. MULTIPLE PIECE TIEBARS SHALL BE USED AT LONGITUDINAL CONSTRUCTION JOINTS UNLESS OTHERWISE SPECIFIED IN THE PLANS.
11. FOR THE 13" SLAB THICKNESS, WHEN STANDARD DETAIL CPCR(1)-94 IS INCLUDED IN THE PLANS, THE CONTRACTOR MAY CHOOSE EITHER THE ONE OR TWO LAYER PLACEMENT OF REINFORCING STEEL UNLESS OTHERWISE SPECIFIED.

FOOTNOTE:

① WHEN MACHINE PLACING OF THE STEEL REINFORCEMENT IS USED, THE USE OF CHAIRS WILL NOT BE REQUIRED AND THE TRANSVERSE STEEL MAY BE PLACED ABOVE OR BELOW THE LONGITUDINAL STEEL. THE VERTICAL LOCATION OF THE BARS WILL BE APPROVED BY THE ENGINEER.

Texas Department of Transportation
Design Division (Pavement)

CONCRETE PAVEMENT DETAILS

CONTINUOUSLY REINFORCED STEEL BARS

ONE LAYER PLACEMENT
T-8, 9, 10, 11, 12, & 13 INCHES

CPCR(1)-94

©TxDOT SEPTEMBER 1994

DN: LJB	CK: LJB	DN: BCD	CK: GLC	REC NO.: R0000

MODIFICATIONS	STATE DISTRICT	FEDERAL REGION	FEDERAL AID PROJECT		SHEET
	22	6	NH99(062)		370
	COUNTY		CONTROL	SECTION	JOB	HIGHWAY
	WEBB		0008	06	131	IH35

ACC: /usr/d481303
FILE: CPCR194.DGN
LEVELS DISPLAYED

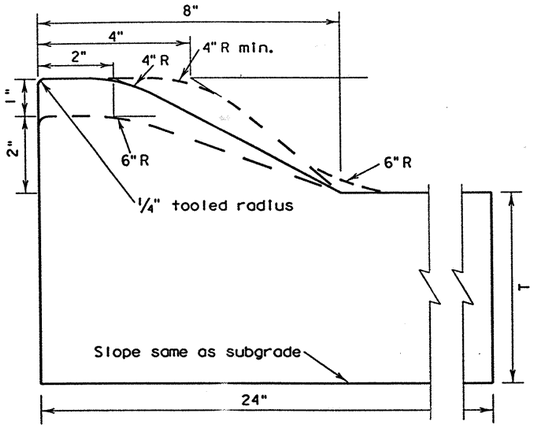

TYPE I CURB AND GUTTER

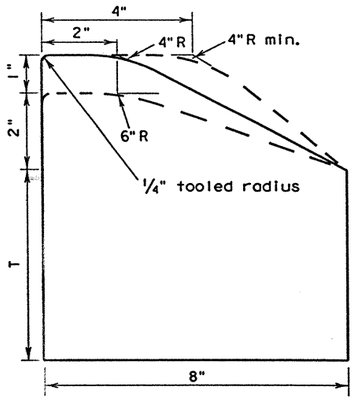

TYPE I CURB

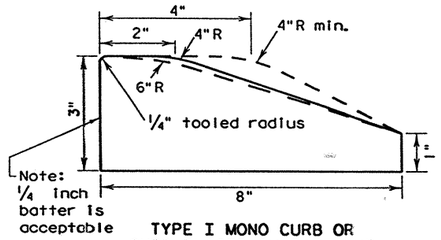

TYPE I MONO CURB OR CURB PLACED ON PAVEMENT

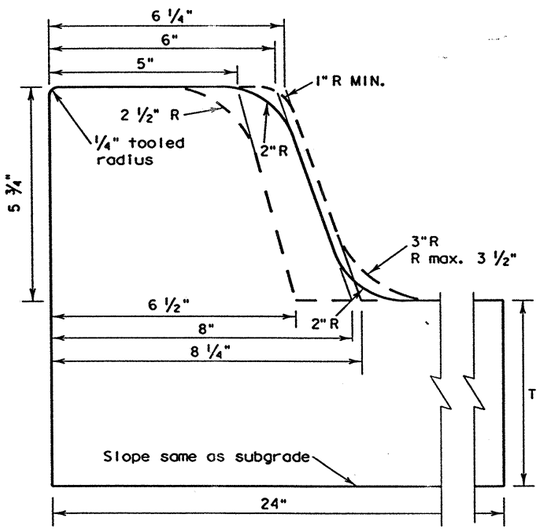

TYPE II CURB AND GUTTER

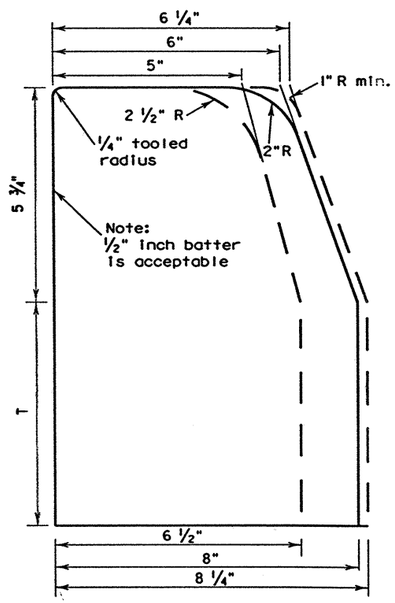

TYPE II CURB

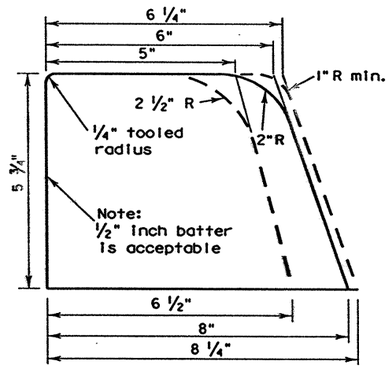

TYPE II MONO CURB OR CURB PLACED ON PAVEMENT

GENERAL NOTES

1. Contractor may use existing forms if the cross section lies within the bar shown by dotted lines. If new forms are to be purchased, leased, or constructed they shall conform to the solid line.

2. When reinforcing steel is required or placed at contractor's option, one of the following schemes of reinforcement shall be required. The manner of placement and location shall be to the satisfaction of the engineer.

   a. Type I curb and gutter (reinf.) or Type II curb and gutter (reinf.) shall have longitudinal reinforcing bars as follows: three #3, two #4, two #5, or one #6.

   b. All types of curb (reinf.) shall have one #3 or #4 bar for for longitudinal reinforcement.

3. Reinforcing bars shall be lapped a minimum of 15".

4. When curb or curb and gutter is placed by a separate pour adjacent to or atop concrete pavement, curb or curb and gutter shall be tied to pavement in a manner satisfactory to the engineer with 8-inch long #3 or #4 bars spaced at 5 feet and expansion and/or contraction joints of curb or curb and gutter shall match those of pavement.

   When curb and curb and gutter is not constructed adjacent to concrete pavement, the following shall govern:

   a. Reinforced curb or curb and gutter shall have no contraction joints.

   b. Non-reinforced curb or curb and gutter shall have formed, tooled or sawed contraction joints at 10'±. The depth of these joints shall be sufficient to ensure cracking at the joints.

   c. Reinforcing curb or curb and gutter shall have expansion joints at points of curvature and at intervals no greater than 120' in all curves and at structures such as bridges, box culverts, curb inlets, etc.

   d. Non-reinforced curb or curb and gutter shall have expansion joints at points of curvature on curves of radius less than 25' and at structures such as bridges, box culverts, curb inlets, etc.

5. One-half inch expansion joint material shall be provided where curb or curb gutter is adjacent to sidewalk or riprap.

6. Transitions between curbs or curbs and gutters of differing cross section shall be accomplished over a 20 ft. length as approved by the engineer.

7. At contractor's option, dimension "T" may be thickness of pavement structure. In no case shall it be less than 6".

8. For purposes of warning, the full width and depth of curb ramps (limits of curb ramp) shall have a light reflective value and texture that significantly contrasts with that of adjoining pedestrian routes.

   Textures may, for example, consist of exposed crushed stone aggregate, roughened concrete, rubber, raised abrasive strips, or grooves extending the full width and depth of the curb ramps. Surfaces that are raised, etched, or grooved in a way that would allow water to accumulate are prohibited.

   Additional information on curb ramp location, design, visibility and texture may be found in the current edition of the Texas Accesibility Standards (TAS) prepared and administered by the Texas Department of Licensing and Regulation.

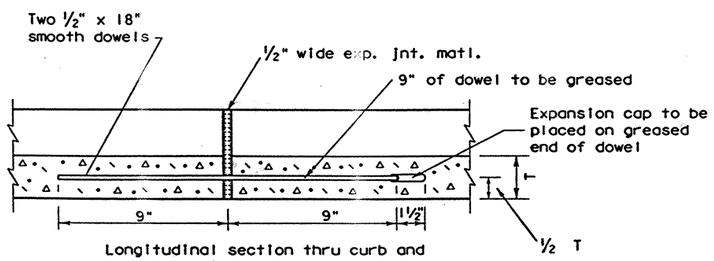

Longitudinal section thru curb and gutter showing typical expansion joint details.

Reinforcing steel (when used) shall not cross expansion joints. steel shall be terminated 3" ± 1" from face of the joint.

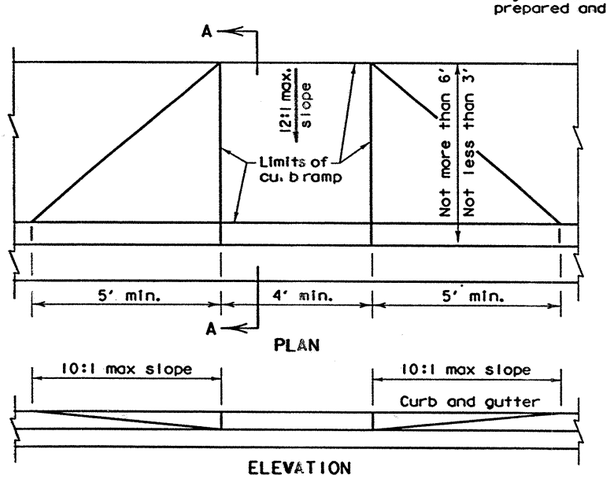

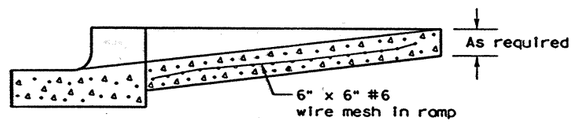

SECTION A-A
WHEELCHAIR AND BICYCLE RAMP

DISCLAIMER:
The use of this standard is governed by the "Texas Engineering Practice Act". No warranty of any kind is made by TxDOT for any purpose whatsoever. TxDOT assumes no responsibility for the conversion of this standard to other formats or for incorrect results or damages resulting from its use.

LEVELS DISPLAYED

Texas Department of Transportation
Design Division (Roadway)

CONCRETE CURB AND CURB AND GUTTER

CCCG-95

FILE: CCCG95.DGN	DN: MAM	CK: RAR	DW: RAR	CK: MAM	NEG:	
©TxDOT 1995	DIST	FED REG	FEDERAL AID PROJECT			SHEET
REVISIONS	22	6	NH 99(462)			371
	COUNTY		CONTROL	SECT	JOB	HIGHWAY
	WEBB		0018	06	131	IH35

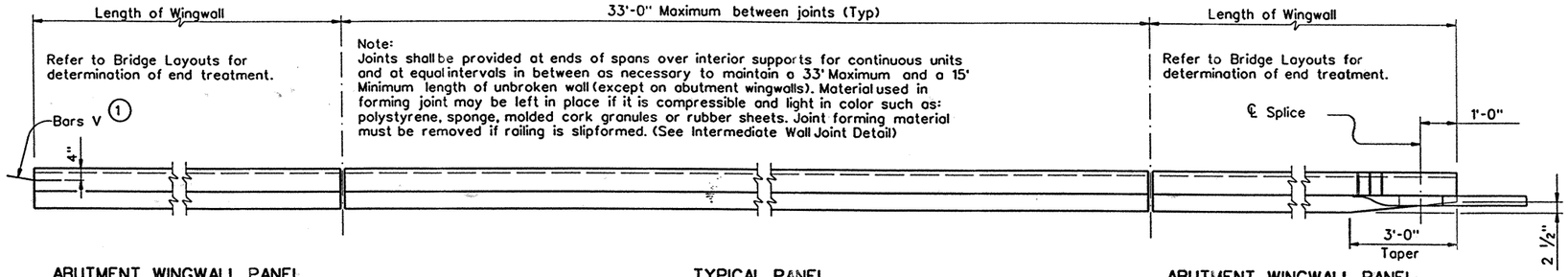

ABUTMENT WINGWALL PANEL
(Showing dowels for connection to approach Concrete Traffic Barrier)

TYPICAL PANEL

ABUTMENT WINGWALL PANEL
(Showing MBGF Attachment)

PLAN

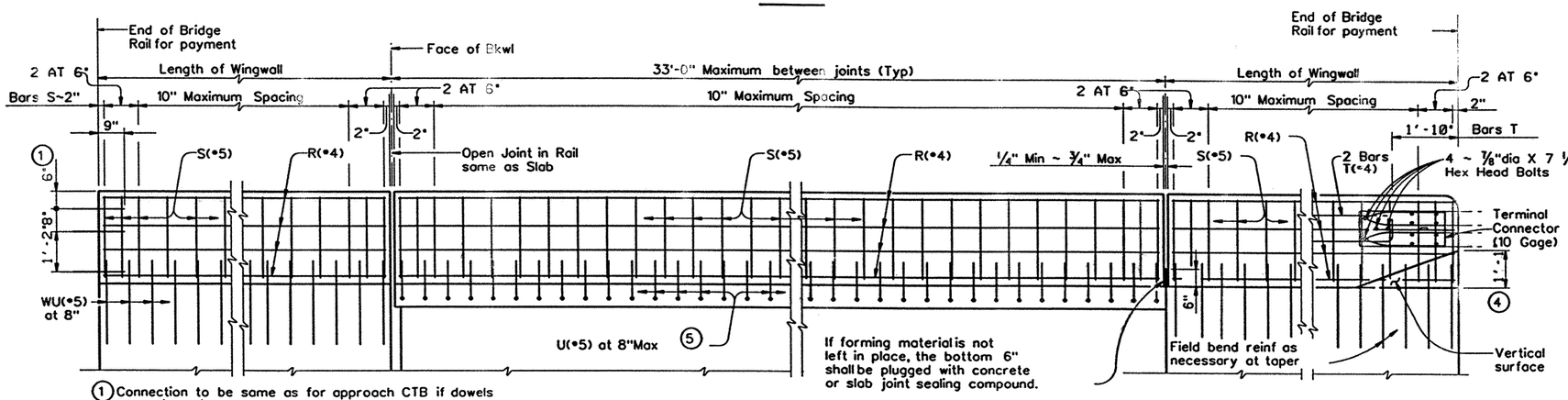

1 Connection to be same as for approach CTB if dowels are not used.
2 1 3/4" Dia washer required under 7/8" Dia Bolt Heads and Nuts.
4 Increase 2" for Structure with overlay
5 For ACP Overlay exceeding 3", reduced bar spacing may be required.

ROADWAY ELEVATION OF RAIL

GENERAL NOTES:

Designed according to current AASHTO Standard Specifications for Highway Bridges. Structurally evaluated to be equivalent or greater in strength to other safety-shape railings which have been crash tested to NCHRP Report 230 SL-2 criteria. Also equivalent to railings tested to 1989 AASHTO Guide Specification PL-2 criteria and Texas Transportation Institute research project No. 9429 CDK.

All parts of the railing including concrete parapet wall, reinforcing, terminal connector, bolts, nuts and washers are included in the price bid per linear foot of rail.

All steel components except reinforcing shall be galvanized unless otherwise shown in plans.

All concrete for railing wall shall be Class "C".

All reinforcing steel shall be grade 60.

Metal Beam Guard Fence or Concrete Traffic Barrier is usually attached to the abutment wingwall panel. See plan sheet for details and length for payment. The splice between the approach guard fence and the terminal connector shall be with the normal eight bolts. The dowel connection to the approach traffic barrier shall be grouted the same as other barrier joints.

Shop drawings will not be required for this rail.

This railing may be constructed with slip-forms when shown on the plans or approved by the Engineer, with equipment approved by the Engineer. Sensor control for both line and grade must be provided. When slip-forming is used, the concrete may be cured with membrane curing compound.

Additional reinforcing may be tack welded to the upper two thirds of the reinforcing cage to provide bracing when slip-forming is used. Additional anchorage devices may be added when welding is necessary in the lower one third of the cage. Do not weld to U or S bars in the lower one third of the cage.

The back of railing shall be vertical unless otherwise shown in the plans or approved by the Engineer.

Deformed welded wire fabric may be used as an option to conventional reinforcement and shall be made in accordance with ASTM A497 (Deformed Wire).

Welded Wire Fabric Detail shown is for D8.5 longitudinal wires and D8.3 vertical wires. Combinations of Reinforcing Steel and Welded Wire Fabric or configurations of Welded Wire Fabric other than shown will be permitted when the conditions in the table are satisfied and the dimension from end of section to first welded vertical wire does not exceed 3".

Epoxy coat bars U and WU if slab bars are epoxy coated.

Average weight of railing (with no overlay) is 376 plf.

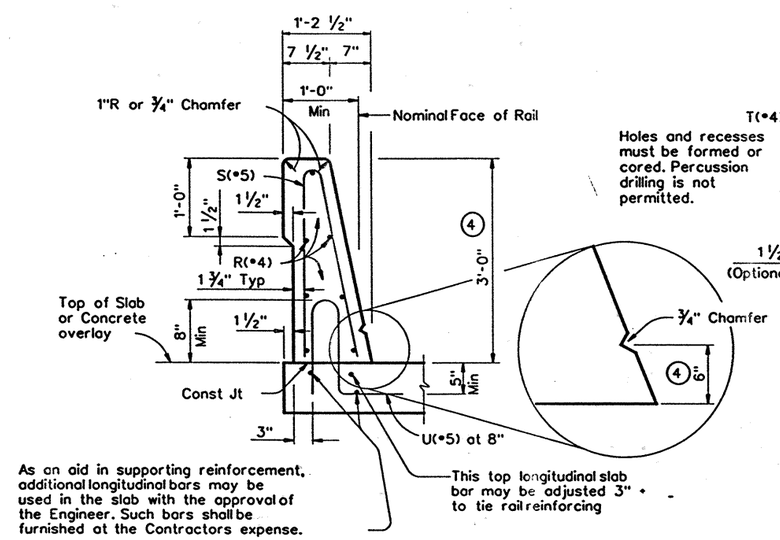

As an aid in supporting reinforcement, additional longitudinal bars may be used in the slab with the approval of the Engineer. Such bars shall be furnished at the Contractors expense.

TYPICAL SECTION
(SHOWING CONVENTIONAL REINF)

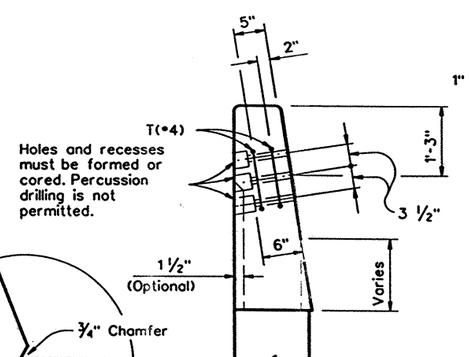

SECTION A-A

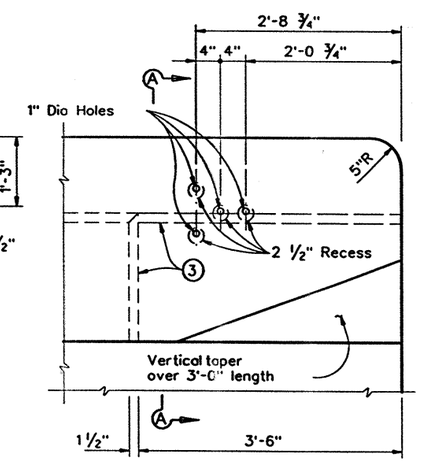

3 Back offset may optionally be continued to end of railing.

END TREATMENT AT MBGF

Sheet 1 of 2

Texas Department of Transportation
Design Division (Bridge)

SINGLE SLOPE TRAFFIC RAILING

TYPE SSTR

FILE: rlstd037.dgn	DN: GHO	CK: THD	DW: TCG	CK: LDS	STD: B566
©TxDOT January 1996	DIST	FED REG	FEDERAL AID PROJECT		SHEET
REVISIONS	22	6	NH99(462)		372
	COUNTY		CONTROL	SECT	JOB	HIGHWAY
	WEBB		0018	06	131	IH35

DISCLAIMER:
The use of this standard is governed by the "Texas Engineering Practice Act". No warranty of any kind is made by TxDOT for any purpose whatsoever. TxDOT assumes no responsibility for the conversion of this standard to other formats or for incorrect results or damages resulting from its use.

ACC:
(LV=1,2 for English; 1,3 for Metric)
LEVELS DISPLAYED
1 2

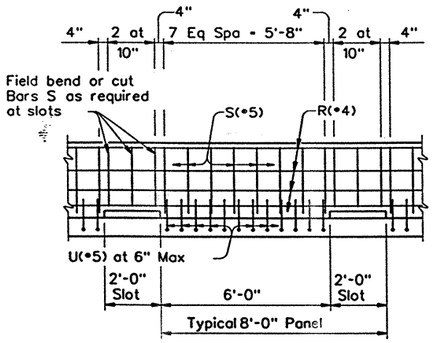

SIDE DRAIN DETAIL

Local Deck or Side Drains may be used where shown elsewhere on the plans or as directed by the Engineer. Modify Bars S as required. No drains should be placed over railroad tracks, lower roadways, or within 6 feet of the face of an adjacent bent cap.

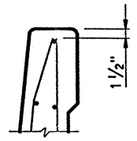

Bars S may be constructed as two separate bars at the contractors's option.

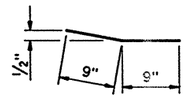

BARS V (•8)
(3 at each connection)

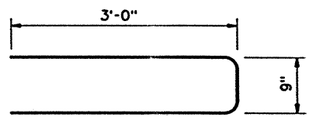

BARS T (•4)
(2 at each terminal)

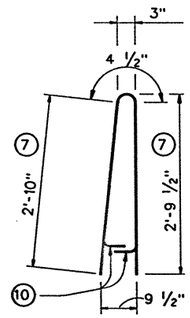

BARS S (•5)

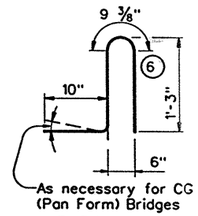

BARS U (•5)

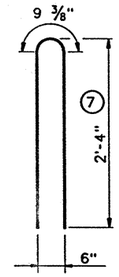

BARS WU (•5)

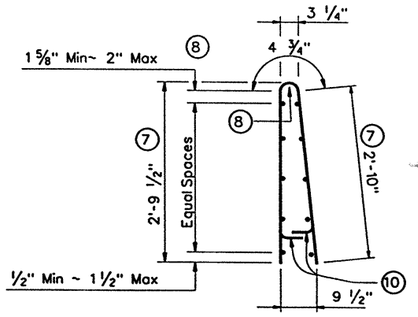

WELDED WIRE FABRIC
(OPTIONAL)

6. Increase to slab thickness plus 5 1/2" for slabs over 10". Dimension given is permissible without increase for slabs 10" or less. Increase by nominal overlay thickness if over 2".
7. Dimension given is permissible for structures with up to 2" of overlay.
8. No longitudinal wires may be within upper bend.
9. Place additional •4 longitudinal bar (included as part of railing reinforcement) when U bars are embedded less than 5".
10. Bend or cut as required to clear drain slots.

DESCRIPTION	LONGITUDINAL WIRES	VERTICAL WIRES
Minimum (Cumulative Total) Wire Area	1.100 Sq In.	0.295 Sq In. per Ft
	No. of Wires	Spacing
Minimum	6	4"
Maximum	11	12"
Maximum Wire Size Differential	The smaller wire shall have an area of 40% or more of the larger wire.	

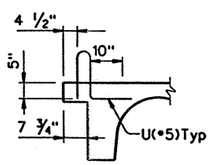

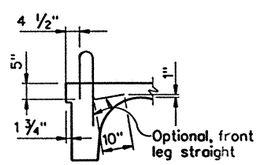

CG (PAN FORM) BRIDGES

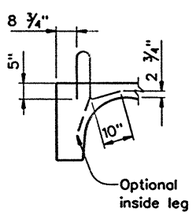

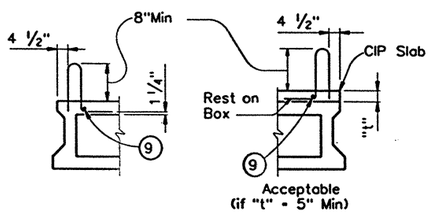

BOX BEAM

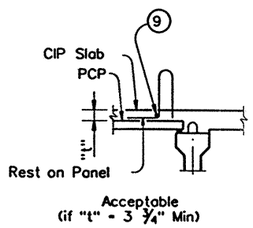

PRECAST PANELS

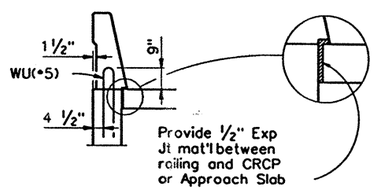

WINGWALLS AND CIP RETAINING WALLS

TYPICAL U AND WU BAR PLACEMENT

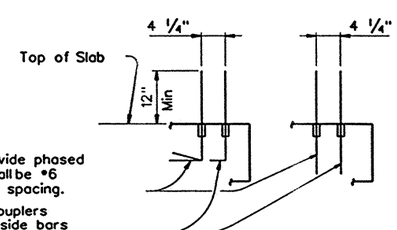

Threaded couplers may be used to provide phased installation of U and WU Bars. These shall be •6 Bars at 8" spacing or •5 Bars at 6 1/2" spacing.

Outside optional bars with couplers must have same bend as inside bars but spacing may be doubled (16" & 13").

OPTIONAL BARS U(•6) OR WU(•6)

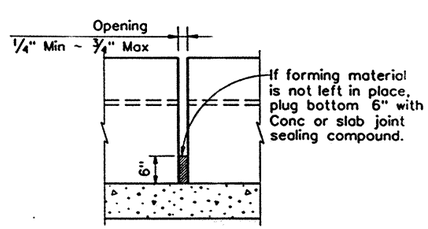

INTERMEDIATE WALL JOINT DETAIL

DISCLAIMER:
The use of this standard is governed by the "Texas Engineering Practice Act". No warranty of any kind is made by TxDOT for any purpose whatsoever. TxDOT assumes no responsibility for the conversion of this standard to other formats or for incorrect results or damages resulting from its use.

LEVELS DISPLAYED 1 2 ACC: (LV=1,2 for English; 1,3 for Metric)

Sheet 2 of 2

Texas Department of Transportation
Design Division (Bridge)

SINGLE SLOPE TRAFFIC RAILING

TYPE SSTR

FILE: rlstd037.dgn	DN: GHO	CK: THD	DW: TGC	CK: LDS	STD: B566
©TxDOT January 1996	DIST	FED REG	FEDERAL AID PROJECT		SHEET
REVISIONS	22	6	NH 99 (462)		373
	COUNTY		CONTROL	SECT	JOB	HIGHWAY
	WEBB		0018	06	131	1435

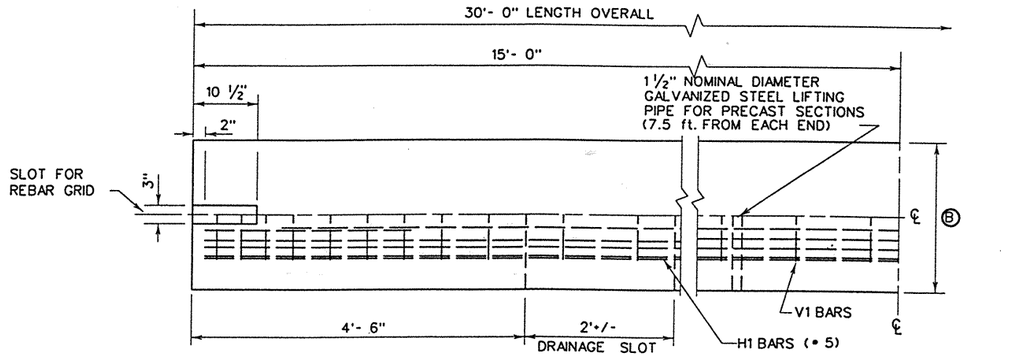

NOTE: CONCRETE ON BOTTOM HALF OF PLAN VIEW IS REMOVED IN ORDER TO SHOW REINFORCING DETAILS.

PLAN VIEW

(SYMMETRICAL ABOUT CENTER LINES)

GENERAL NOTES

1. BARRIER LENGTH SHALL BE 30 FEET (+/- 1 INCH) UNLESS OTHERWISE SPECIFIED IN THE PLANS.
2. THE USUAL TEMPORARY INSTALLATION WILL REQUIRE THE PLACEMENT OF THE REBAR GRID IN THE UNGROUTED SLOT. THE USUAL PERMANENT INSTALLATION USING PRECAST BARRIER WILL CONNECT THE BARRIER SEGMENTS WITH THE REBAR GRID PLACED IN THE SLOT AND GROUTED IN PLACE.
3. WHEN INSTALLED IN A PERMANENT ROADWAY LOCATION, THE END CONNECTIONS OF THE PRECAST BARRIER SHALL BE GROUTED WITH A MIXTURE OF TWO PARTS SAND AND ONE PART CEMENT WITH ENOUGH WATER TO MAKE THE MIXTURE PLASTIC. GROUTING SHALL BE DONE IN A MANNER THAT WILL ASSURE A SMOOTH SURFACE AT THE JOINT.
4. ALL CONCRETE SHALL BE CLASS A, C, OR H, UNLESS OTHERWISE SPECIFIED.
5. ALL REINFORCING STEEL SHALL BE GRADE 60, UNLESS OTHERWISE SPECIFIED.
6. EACH PRECAST BARRIER TO BE INSTALLED IN A TEMPORARY LOCATION SHALL BE DELIVERED WITH A REBAR GRID.
7. CHAMFER TOP AND END EDGES ¾ INCH.
8. UNLESS OTHERWISE SHOWN IN THE PLANS, THE CONTRACTOR HAS THE OPTION OF PLACING EITHER PRECAST OR CAST-IN-PLACE PERMANENT CONCRETE BARRIER. CAST-IN-PLACE BARRIER MAY BE SLIP FORMED. ADDITIONAL REINFORCEMENT MAY BE TACK WELDED TO THE UPPER TWO-THIRDS OF THE REINFORCING CAGE TO PROVIDE BRACING. VERTICAL BARS SHALL BE PROVIDED ONLY TO THE EXTENT NECESSARY TO POSITION LONGITUDINAL STEEL WITHIN TOLERANCES. LIFTING PIPE, REBAR GRID AND SLOT SHALL BE OMITTED FOR CAST-IN PLACE CONSTRUCTION.
9. BAR SPLICES FOR ROADWAY BARRIER SHALL BE A MINIMUM OF 24 TIMES THE NOMINAL DIAMETER OF THE BAR.
10. ANY METHOD DEVISED BY THE CONTRACTOR AND APPROVED BY THE ENGINEER THAT WILL ASSURE THE LONGITUDINAL ROADWAY STEEL WILL BE POSITIONED +/- ½ INCH AS DIMENSIONED WILL BE SATISFACTORY.
11. WELDED WIRE FABRIC MAY BE USED AS AN OPTION TO CONVENTIONAL REINFORCEMENT FOR PRECAST OR CAST-IN-PLACE BARRIER. WELDED WIRE FABRIC SHALL BE MADE IN ACCORDANCE WITH ASTM A497.
12. CONDUIT TO BE PROVIDED ONLY WHEN CALLED FOR ELSEWHERE IN THE PLANS. POSITION OF THE CONDUIT OR CONDUIT PASSAGEWAY MAY BE ADJUSTED TO FACILITATE CONSTRUCTION, SUBJECT TO APPROVAL OF THE ENGINEER.
13. TRANSITIONS TO BARRIER HEIGHT, AS NEEDED, SHALL BE DETERMINED BY THE ENGINEER. CHANGES IN BARRIER HEIGHT SHOULD NOT NORMALLY EXCEED 2 INCHES PER 30 FOOT. VERTICAL STEEL SHALL BE UNIFORMLY TRANSITIONED THROUGHOUT THE VARIATION IN BARRIER HEIGHT AS DIRECTED BY THE ENGINEER.
14. A 36 INCH MINIMUM HEIGHT DIFFERENTIAL BETWEEN TOP OF BARRIER AND TOP OF ACP SHALL BE REQUIRED AT PLACEMENT IN ORDER TO ALLOW FOR UP TO 6 INCHES OF FUTURE OVERLAYS WHILE MAINTAINING A 30 INCH MINIMUM FUTURE EFFECTIVE HEIGHT OF BARRIER. TOTAL MINIMAL BARRIER HEIGHT FOR DESIGN IS THEREFORE DICTATED BY ALLOWANCE FOR FUTURE OVERLAYS PLUS EXISTING STAIRSTEP DIMENSION "S". MINIMUS TYPICALLY ROUNDED TO 42", 48", OR 54" TO FACILITATE PRECASTING.

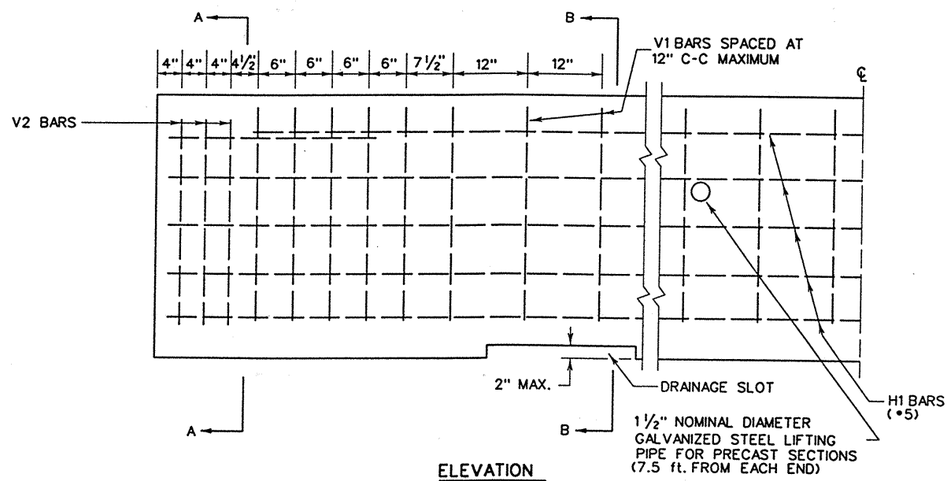

ELEVATION

(SYMMETRICAL ABOUT CENTER LINES)

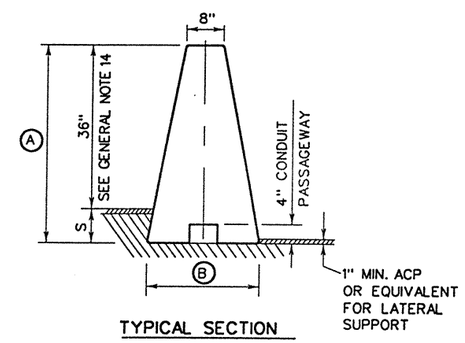

TYPICAL SECTION

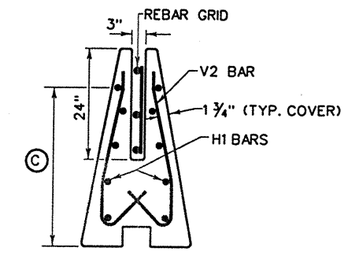

SECTION A-A

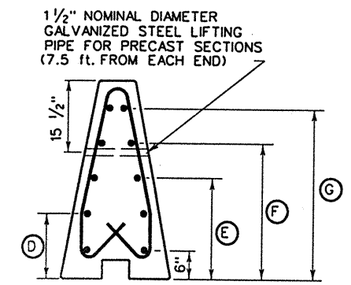

SECTION B-B

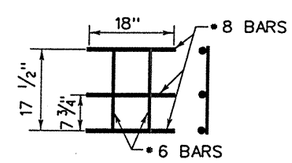

REBAR GRID

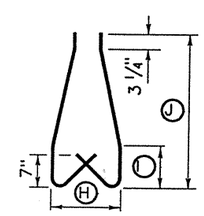

V2 BAR (•4)

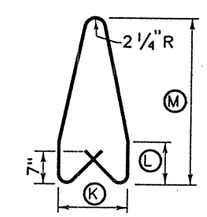

V1 BAR (•4)

REINFORCING DETAILS

R = Radius
D = Diameter

WHEN PRECAST BARRIER IS TO BE USED WITH THE WELDED WIRE FABRIC OPTION, CONVENTIONAL BAR REINFORCEMENT WILL BE REQUIRED WITHIN 2 FEET, PLUS A DEVELOPMENT LENGTH OF 18", FROM THE ENDS OF EACH BARRIER SEGMENT.

WELDED WIRE FABRIC
4 x 12 - D20 x D14
60 KSI MINIMUM YIELD STRENGTH

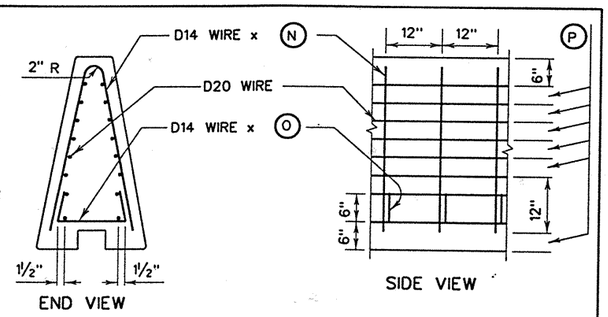

END VIEW

SIDE VIEW

WELDED WIRE FABRIC OPTIONAL REINFORCING

BARRIER HEIGHT (IN.)	DIMENSIONS (IN.)															
	Ⓐ	Ⓑ	Ⓒ	Ⓓ	Ⓔ	Ⓕ	Ⓖ	Ⓗ	Ⓘ	Ⓙ	Ⓚ	Ⓛ	Ⓜ	Ⓝ	Ⓞ	Ⓟ
42	42	24	33 ½	13 ½	21	28 ½	36	15	9 ¼	33 ¼	15	9 ¼	36	72	28	4
48	48	26 9/32	39 ½	15	24	33	42	17 ¼	10 ¾	39 ¼	17 ¼	10 ¾	42	84	31 ½	5
54	54	28 9/16	45 ½	16 ½	27	37 ½	48	19 ½	12 ¼	45 ¼	19 ½	12 ¼	48	96	34 ¾	6

Texas Department of Transportation
Design Division (Roadway)

SINGLE SLOPE CONCRETE BARRIER

TYPE 2

SSCB(2)-99

FILE: sscb299.dgn	DN: gth	CK: gth	DW: bgd	CK:
© TxDOT MAY 1992	DIST 22	FED REG 6	FEDERAL AID PROJECT NH-99(462)	SHEET 374
REVISIONS	COUNTY WEBB	CONTROL 001B	SECT 06	JOB 131	HIGHWAY IH35

DISCLAIMER : The use of this standard is governed by the Texas Engineering Practice Act. No warranty of any kind is made by TxDOT for any purpose whatsoever. TxDOT assumes no responsibility for the conversion of this standard to other formats or for incorrect results or damages resulting from its use.

LEVELS DISPLAYED

✱✱ Post spacing of 6'- 3" may be used on the downstream (from a traffic flow standpoint) end of MBGF placed on roadways with one-way traffic operations.

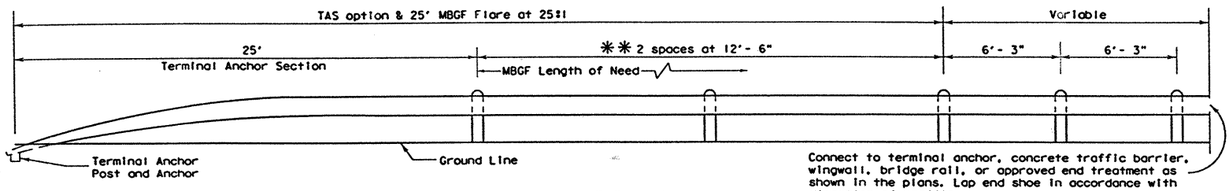

ELEVATION

Note ①: Where a nominal length of 6'- 0" is specified as acceptable elsewhere in the plans, these dimensions shall be increased by 0'- 6". The additional length should be specified only on roadways where future ACP overlays and adjustments of the rail height on the same posts are likely.

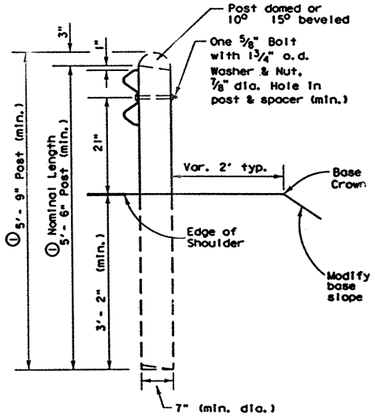

WOOD POST

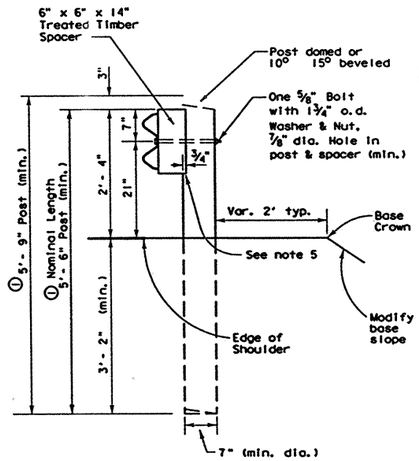

WOOD POST
(Blockout)

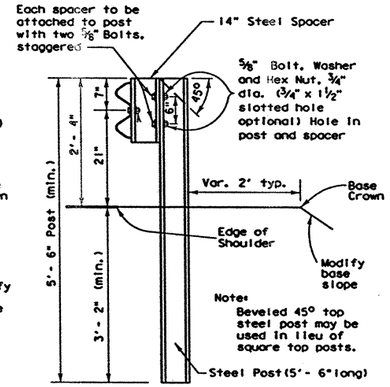

STEEL POST
(Blockout)

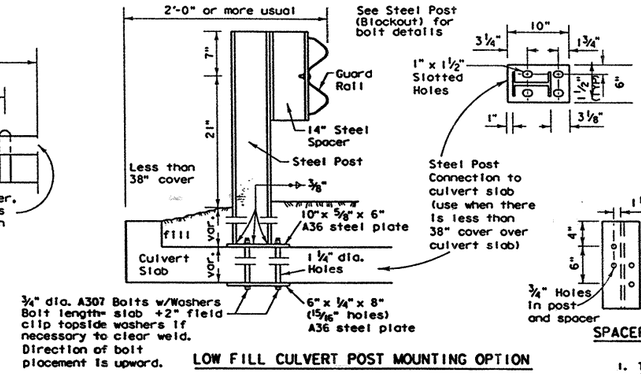

LOW FILL CULVERT POST MOUNTING OPTION

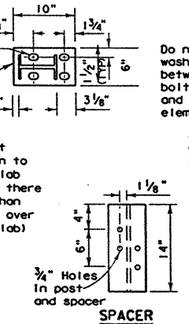

SPACER

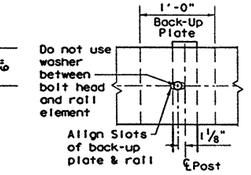

POST CONNECTION
STEEL POST
Non-Splice Steel Post Only

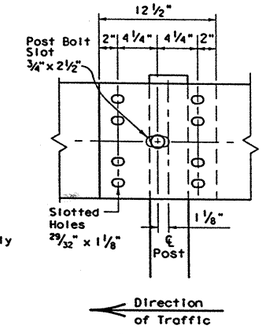

RAIL SPLICE

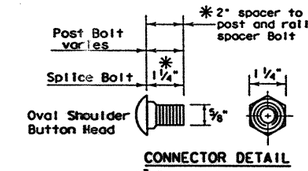

CONNECTOR DETAIL
(7/8" Hex Bolts required for terminal connector)
✱ Or as approved by the Engineer

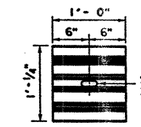

BACK-UP PLATE

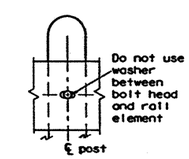

POST CONNECTION
WOOD POST

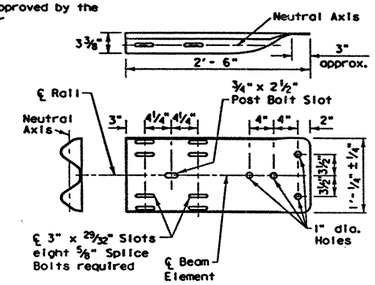

TERMINAL CONNECTOR
(10 Gauge Minimum)

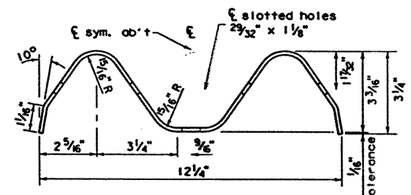

Note: Actual section may be slightly different depending upon the manufacturer.

SECTION THRU GUARD RAIL

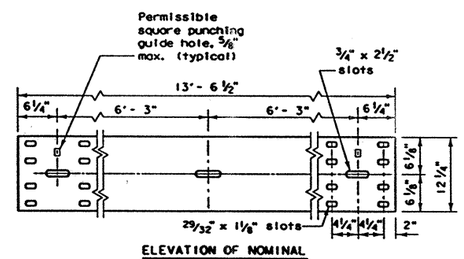

ELEVATION OF NOMINAL
12 1/2 FOOT GUARD RAIL
(25 foot sections may also be supplied)

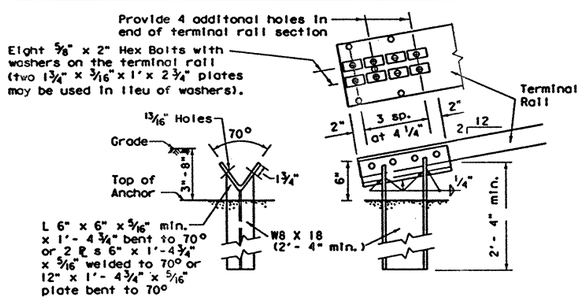

Note: This post requires four additional holes (shop or field) in the terminal rail member with eight 5/8" bolts and washer plates as shown for attachment.

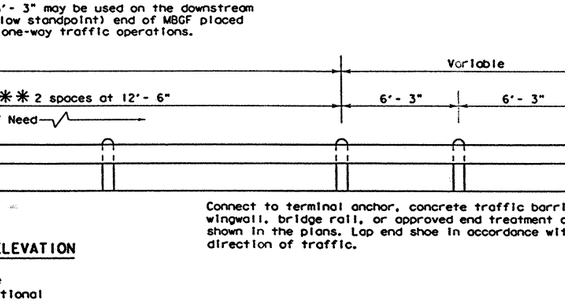

Note: This optional post requires the use of the 10 ga. terminal connector with four 7/8" hex bolts for attachment to the anchor post.

TERMINAL ANCHOR POST OPTIONS

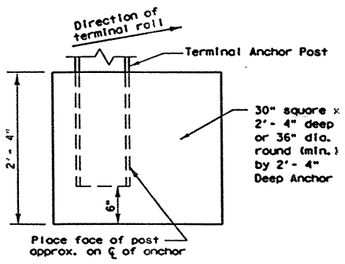

Notes: Either post may be used with either anchor.

No construction joint is allowed in the concrete anchor.

Terminal rail may be bolted to post and in twist position prior to placing concrete anchor.

If concrete anchor is precast, the area should be compacted as directed by the Engineer, when placed in the field.

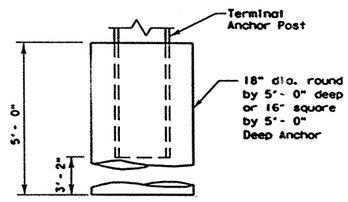

TERMINAL CONCRETE ANCHOR OPTIONS

GENERAL NOTES

1. The exact position of guard fence shall be as shown elsewhere on the plans or as directed by the Engineer. Guard fence shall be transitioned to a smooth connection with other guard fence or structure railing as shown elsewhere on plans.
2. Unless otherwise shown in the plans, guard fence placed in the vicinity of curbs shall be blocked out so that the face of curb is located directly below or behind the face of rail. Rail placed over curbs shall be installed so that the post bolt is located approximately 21-inches above the gutter pan or roadway surface.
3. Unless otherwise shown in the plans, MBGF shall be placed with the face of rail directly above the shoulder edge (or curbface) except the 25' Terminal Anchor Section and adjacent 25' or MBGF shall be flared at 25:1 (longitudinal:lateral) to provide a 2' offset between buried anchor and shoulder edge (or curbface). Flaring the 25' Terminal Anchor and adjacent 25' MBGF is optional for one-way traffic conditions on the downstream end of guard fence.
4. At the option of the Contractor, the rail elements for the guard fence may be be furnished in either 12 1/2 or 25 foot nominal lengths with post bolt slots for connection to posts.
5. Timber posts may be beveled from 10 to 15 degrees on the top of both ends with high side of top of post placed toward the roadway or they may be domed. When blockout guard fence is specified elsewhere in the plans, a 6"x6"x14" treated timber spacer of yellow pine shall be used with wood posts. When "blocked out", the upper portion of the post shall be notched 3/4" to provide flat surface for timber spacer. A tolerance of ±1/8" will be permitted on the notched portion of the post. Routing the timber spacer may be used in lieu of notching the post. The depth of routing shall be 3/4" at the center of radius ±1/8".
6. Steel posts shall be blocked out. Steel posts and spacers shall meet the requirements of ASTM A-36 (W6 x 9.0 or W6 x 8.5). Bolt holes shall be approximately centered between web and edge of flange of spacers and posts.
7. Post spacing will be 6'-3" except that the first post will be 25' from the terminal anchor post and the next two posts spaced at 12'-6" with a minimum of 8 posts adjacent to structures spaced at 3'-1 1/2" and posts adjacent to Type T6 bridge rail are spaced at 6'- 3". Post spacing adjacent to structures may vary as shown on bridge rail details or as directed by the Engineer.
8. The upper 10" (minimum) of the terminal anchor post and all steel fittings thereon shall be galvanized.
9. The terminal anchor post shall be set in Class "A" concrete in (unless otherwise shown on plans) in accordance with item, "Portland Cement Concrete". Concrete shall be subsidiary to the bid item requiring construction of the terminal rail section and anchorage system.
10. An anchor other than to a terminal anchor post shall consist of a connection similar to the rail splice or similar to the terminal connector.
11. Back-up plates shall be provided at intermediate (non-splice) steel posts. Back-up plates shall conform to the materials and galvanizing requirements specified for the rail element, and shall be of the same nominal thickness as the rail element used.
12. Washers used with the eight 5/8" splice bolts and nuts that are provided for terminal connectors and/or terminal anchor posts shall be 1 3/4"x 3"x 3/16", or 1" i.d. and 2" o.d. x 0.134" (ANSI B27.2) narrow Type A plain washers.
13. The 10 gauge terminal connectors must be used with the optional terminal anchor post. Either anchor post may be used with either concrete anchor.
14. Welded steel posts and spacers shall meet the requirements of ASTM A-36. The flange width and thickness, web thickness, and depth of welded posts and spacers shall equal or exceed the dimensions of a standard rolled W6 x 8.5 or W6 x 9.0.
15. Special fabrication will be required at installations having a curvature of less than 150' radius.
16. Bolts shall be of sufficient length to extend through the full thickness of the nut and no more than 3/8" beyond it. (Button head bolts may be used instead of hex bolts when specified by the Engineer.) Fittings (bolts, nuts, and washers) shall be in accodance with item, "Metal For Structures". Fittings shall be subsidiary to the bid item requiring construction of MBGF or Terminal Anchor Section.
17. Crown will be widened to accommodate guard fence.
18. Where solid rock is encountered or where shown on the plans, the diameter of the holes shall be approximately 12 inches, the backfilling shall be with a cohesionless material, and embedment depth shall be 1'-6" or more as directed by the Engineer. Timber posts shall not be set in concrete.

Texas Department of Transportation
Design Division (Roadway)

METAL BEAM GUARD FENCE

MBGF-94

©TxDOT JULY 1994

DN: TGM	CK: TGM	DW: BGD	CK:	MSC NO.: A6
MODIFICATIONS	STATE DISTRICT	FEDERAL REGION	FEDERAL AID PROJECT	SHEET
	22	6	NH99(462)	375

COUNTY	CONTROL	SECTION	JOB	HIGHWAY
WEBB	0018	06	131	1435

ACC: /usc/d481303
FILE: MBGF94.DGN
LEVELS DISPLAYED

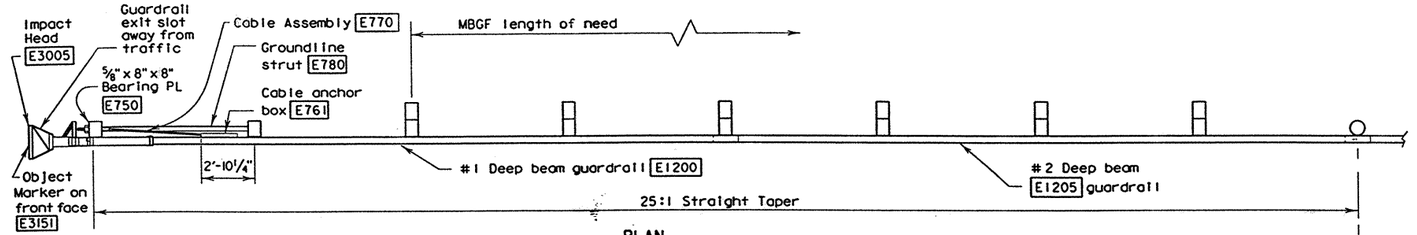

PLAN

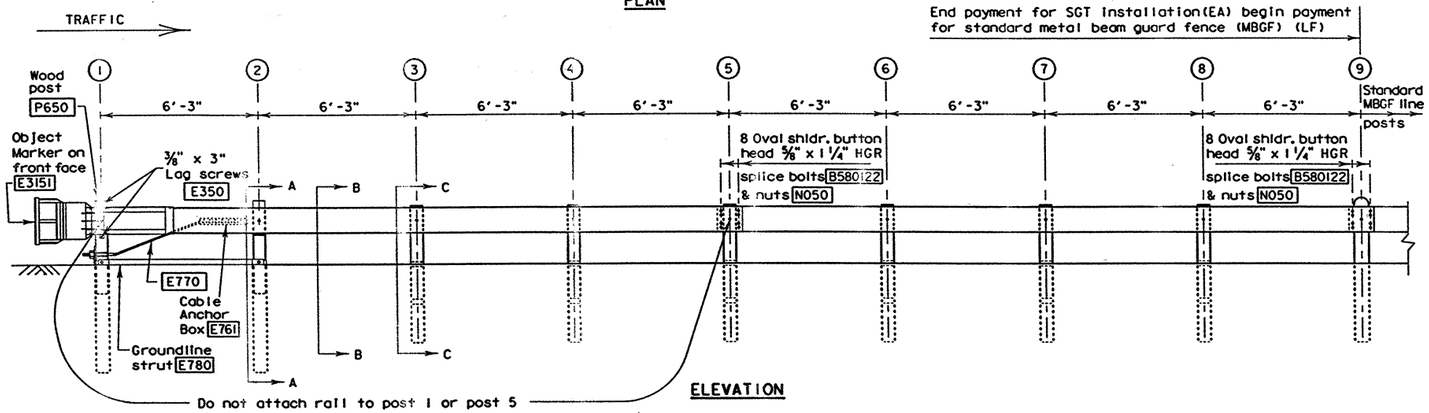

ELEVATION

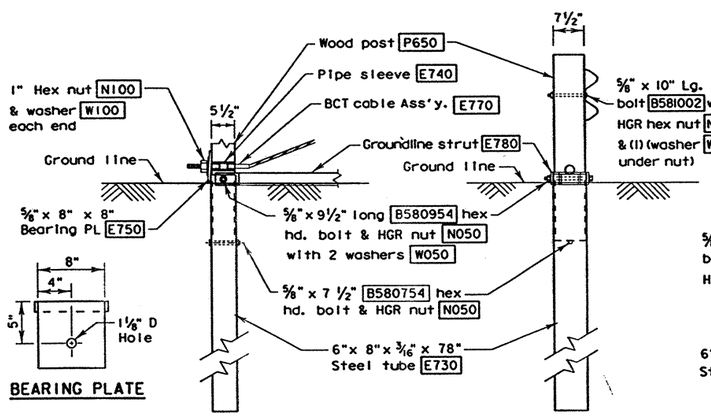

BEARING PLATE

PARTIAL VIEW AT POST #1

SECTION A-A
(at post #2)

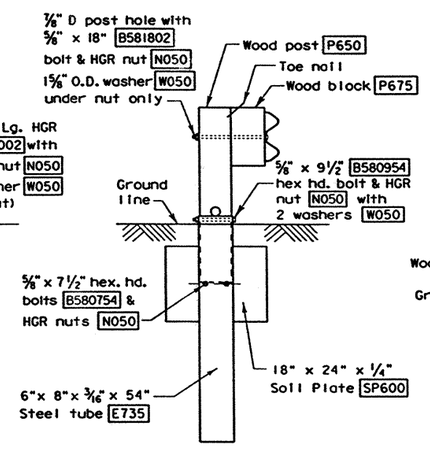

SECTION B-B
(Typ. at post and tube positions)

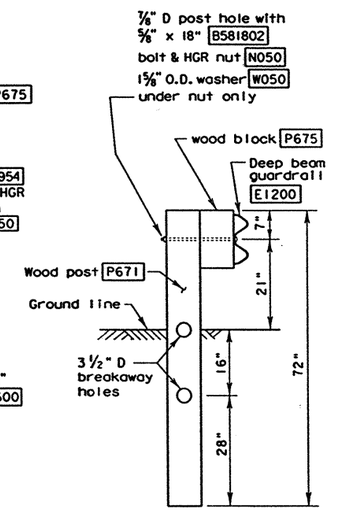

SECTION C-C
(Typ. at post only positions)

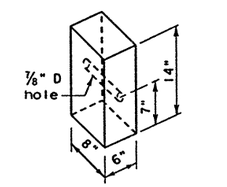

WOOD BLOCKOUT
P675

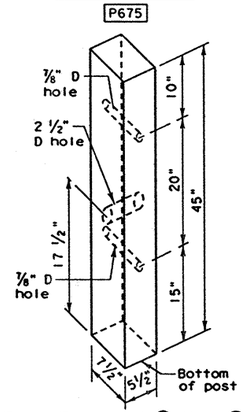

Type I - post ① thru ②
Type II - post ① thru ④
Type III - post ① thru ⑧
All measurements should be taken from bottom of posts.

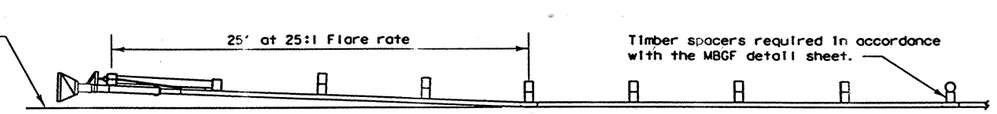

DETAIL A
Placement at curbed locations

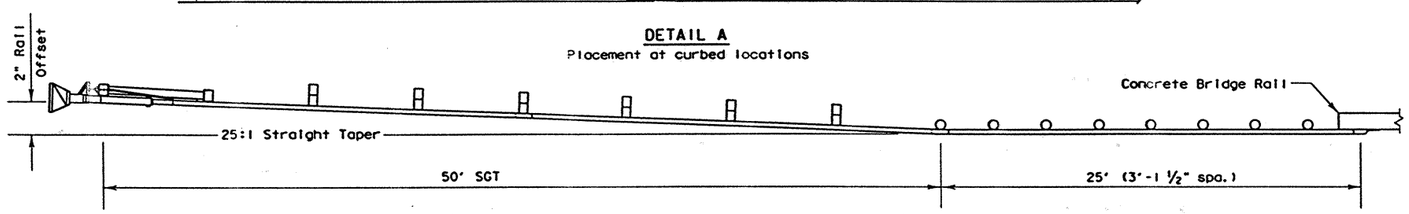

DETAIL B
Usual minimum placement to protect concrete bridge ends

GENERAL NOTES

1. The type of SGT unit will be specified elsewhere in the plans. (Numbers in circles indicate post position.)

	Post & Tube	Post Only
Type I	Posts ① thru ②	Posts ③ thru ⑧
Type II	Posts ① thru ④	Posts ⑤ thru ⑧
Type III	Posts ① thru ⑧	None

2. Wood posts are required with this guardrail end treatment.
3. All bolts, nuts cable assemblies, cable anchors, steel tubes & bearing plates shall be galvanized.
4. For non-curb installations, the MBGF will be flared at a rate of 25:1 over the first 50 foot of the system to prevent the terminal head from encroaching on the shoulder. The flare may be decreased or eliminated for specific installations if directed by the Engineer. A 25:1 flare rate will be used at curb sections, beginning at post number 5 and ending at post number one.
5. The steel tubes shall not protrude more than 4 inches above ground. Site grading may be necessary to meet this requirement.
6. The steel tubes may be driven with an approved driving head. They shall not be driven with the wood post in the tube. If the steel tubes are placed in drilled holes, the backfill material must be satisfactorily compacted to prevent tube settlement.
7. When rock excavation is encountered, a 12 inch diameter post hole, 20 inches deep may be used if approved by the Engineer. Granular material will be placed in the bottom of the hole approximately 2 1/2 inches deep to provide drainage. The steel tube sleeves will be field cut to 20 inches in length, placed in the hole and backfilled with adequately compacted material excavated from the hole.
8. The breakaway cable assembly must be taut. A locking device, (vice grips or channel lock pliers) should be used to prevent the cable from twisting when tightening the nuts.
9. The wood blockouts shall be "toe nailed" to the rectangular wood posts to prevent them from turning when the wood shrinks.
10. For curb installations, the soil tubes and posts shall be installed at the proper ground elevation behind the curb. The posts will then require field drilling new holes to accommodate the rail to post connection bolt to maintain the proper height of the rail above the gutter pan. The excess post length above the rail will be removed if directed by the Engineer.
11. An object marker shall be installed on the front of the impact head as detailed on D&OM(VIA).
12. A special site evaluation should be considered, prior to using this end treatment where there is less than 25 feet between the outlet side of the end treatment and any adjacent driving lane.

BILL OF MATERIAL

Code #	Type I Qty.	Type II Qty.	Type III Qty.	DESCRIPTION
E1200	1	1	1	#1 Deep Beam Guardrail (26'-6 1/2") (12 Ga.)
E1205	1	1	1	#2 Deep Beam Guardrail (26'-1/2") (12 Ga.)
E730	2	2	2	Steel Tube - 6" x 8" x 3/16" x 78"
E735	0	2	6	Steel Tube - 6" x 8" x 3/16" x 54"
SP600	0	2	6	Soil Plate - 18" x 24" x 1/4"
P650	2	4	8	Wood Posts - 5 1/2" x 7 1/2" x 45"
P671	6	4	0	Wood CRT Posts - 6" x 8" x 72"
P675	6	6	6	Wood Blockouts - 6" x 8" x 14"
E740	1	1	1	Pipe Sleeve - 2" Std. Pipe x 5 1/2"
E750	1	1	1	Bearing Plate - 5/8" x 8" x 8"
E761	1	1	1	Cable Anchor Box
E770	1	1	1	Cable Assembly
E780	1	1	1	Groundline Strut
E3005	1	1	1	Impact Head
HARDWARE				
B580754	2	6	14	5/8" x 7 1/2" Hex Hd. Bolt
B580954	2	4	8	5/8" x 9 1/2" Hex Hd. Bolt (Top of Tubes)
W050	11	15	23	5/8" Washers
B581002	1	1	1	5/8" x 10" HGR Post Bolt (Post 2)
B580122	16	16	16	5/8" x 1 1/4" HGR Splice Bolt
B581802	6	6	6	5/8" x 18" HGR Post Bolt (Posts ③ thru ⑧)
N050	27	33	45	5/8" HGR Nut (16-Spl, 7-Posts, 2-Strut, 2 ea. at Tube ③ thru ⑧)
E350	2	2	2	3/8" x 3" Lag Screw
N100	2	2	2	1" Hex Nut (Anchor Cable)
W100	2	2	2	1" Washer (Anchor Cable)
E3151	1	1	1	Object Marker - (18" x 18")

R = Radius
D = Diameter

Texas Department of Transportation
Design Division (Roadway)

SINGLE GUARDRAIL TERMINAL
(BEST 350)

SGT(5)-97

FILE: SGT597.dgn	DN: MAM	CK: MAM	DW: BR	CK: MAM	NEG:
©TxDOT FEBRUARY 1997	DIST	FED REG	FEDERAL AID PROJECT #		SHEET
REVISIONS	22	6	NH 99(462)		376
	COUNTY		CONTROL	SECT	JOB	HIGHWAY
	WEBB		0018	06	131	IH35

DISCLAIMER:
The use of this standard is governed by the "Texas Engineering Practice Act". No warranty of any kind is made by TxDOT for any purpose whatsoever. TxDOT assumes no responsibility for the conversion of this standard to other formats or for incorrect results or damages resulting from its use.

LEVELS DISPLAYED

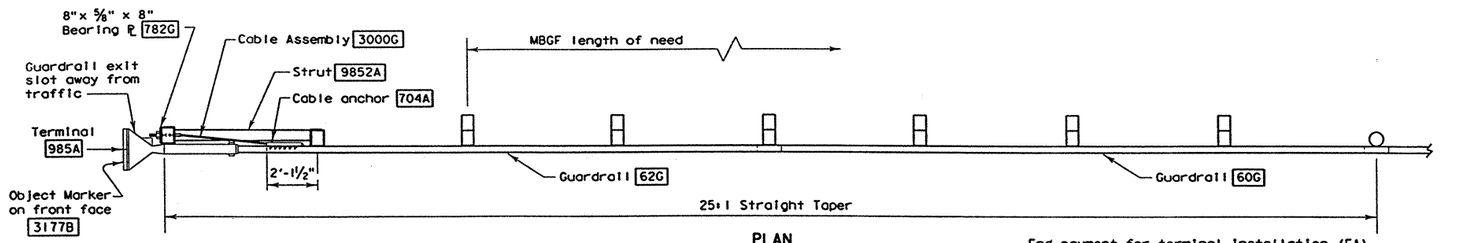

PLAN

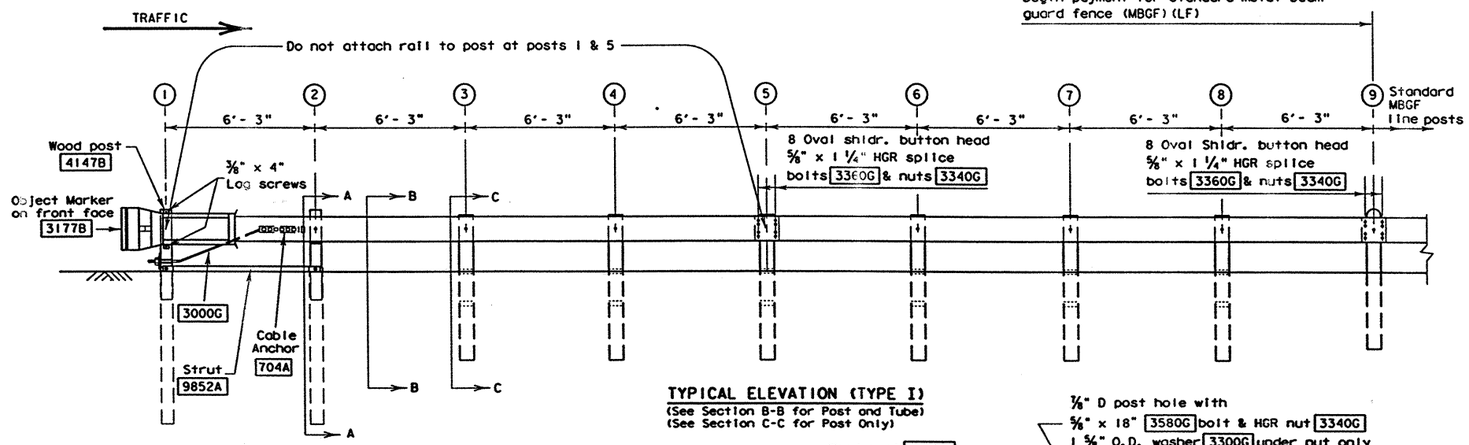

TYPICAL ELEVATION (TYPE I)
(See Section B-B for Post and Tube)
(See Section C-C for Post Only)

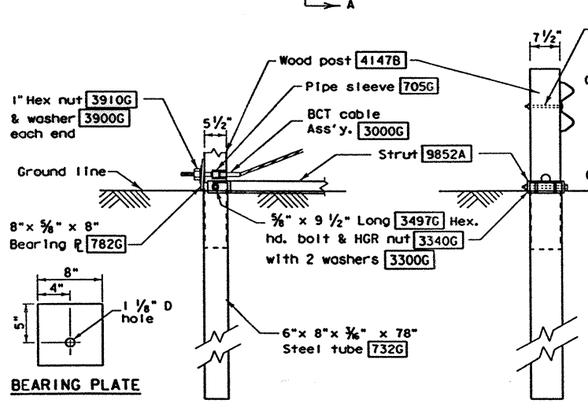

BEARING PLATE

LET PARTIAL VIEW AT POST #1

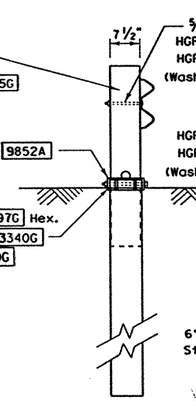

LET SECTION A-A
(at post #2)

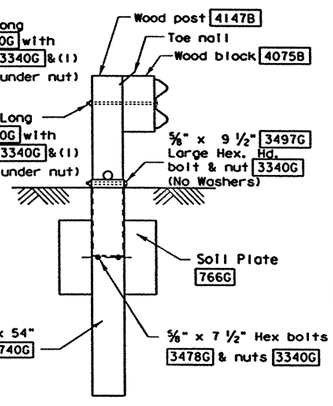

SECTION B-B
(Typ. at post and tube positions)

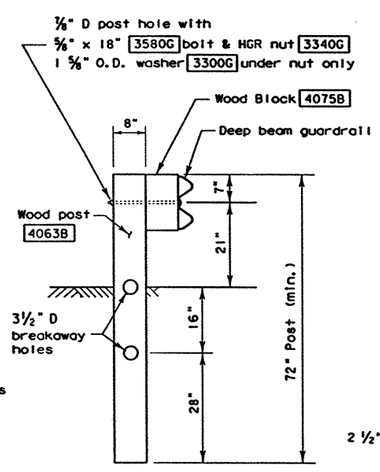

SECTION C-C
(Typ. at post only positions)

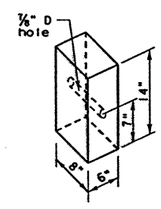

WOOD BLOCKOUT
4075B

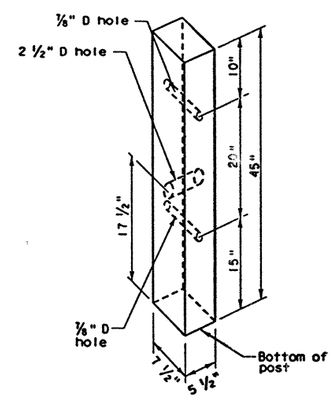

Type I Posts ① thru ②
Type II Posts ① thru ④
Type III Posts ① thru ⑧

All measurements should be taken from bottom of posts.

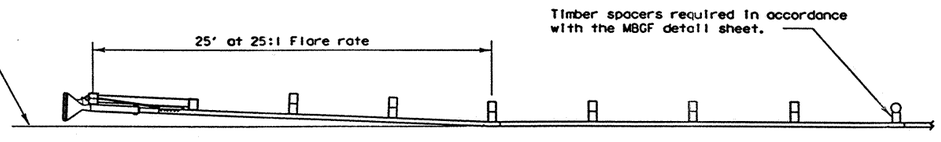

DETAIL A
Placement at curbed locations

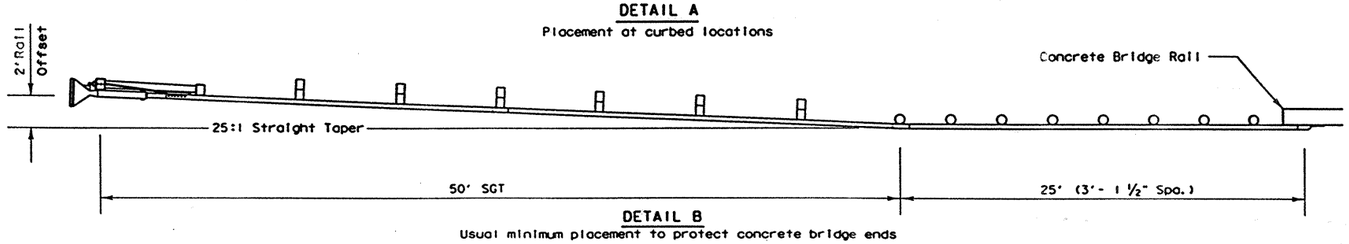

DETAIL B
Usual minimum placement to protect concrete bridge ends

GENERAL NOTES

1. The type of SGT unit will be specified elsewhere in the plans. (Numbers in circles indicate post position.)

	Post & Tube	Post Only
Type I	Posts ① thru ②	Posts ③ thru ⑧
Type II	Posts ① thru ④	Posts ⑤ thru ⑧
Type III	Posts ① thru ⑧	None

2. Wood posts are required with this guardrail end treatment.
3. All bolts, nuts cable assemblies, cable anchors, steel tubes & bearing plates shall be galvanized.
4. For non-curb installations, the MBGF will be flared at a rate of 25:1 over the first 50 foot of the system to prevent the terminal head from encroaching on the shoulder. The flare may be decreased or eliminated for specific installations if directed by the Engineer. A 25:1 flare rate will be used at curb sections, beginning at post number 5 and ending at post number one.
5. The steel tubes shall not protrude more than 4 inches above ground. Site grading may be necessary to meet this requirement.
6. The steel tubes may be driven with an approved driving head. They shall not be driven with the wood post in the tube. If the steel tubes are placed in drilled holes, the backfill material must be satisfactorily compacted to prevent tube settlement.
7. When rock excavation is encountered, a 12 inch diameter post hole, 20 inches deep may be used if approved by the Engineer. Granular material will be placed in the bottom of the hole approximately 2 ½ inches deep to provide drainage. The steel tube sleeves will be field cut to 20 inches in length, placed in the hole and backfilled with adequately compacted material excavated from the hole.
8. The breakaway cable assembly must be taut. A locking device, (vice grips or channel lock pliers) should be used to prevent the cable from twisting when tightening the nuts.
9. The wood blockouts shall be "toe nailed" to the rectangular wood posts to prevent them from turning when the wood shrinks.
10. For curb installations, the soil tubes and posts shall be installed at the proper ground elevation behind the curb. The posts will then require field drilling new holes to accommodate the rail to post connection bolt to maintain the proper height of the rail above the gutter pan. The excess post length above the rail will be removed if directed by the Engineer.
11. An object marker shall be installed on the front of the impact head as detailed on D&OM(VIA).
12. A special site evaluation should be considered, prior to using this end treatment where there is less than 25 feet between the extrusion side of the end treatment and any adjacent driving lane.

BILL OF MATERIAL

Code #	LET-2000 Type I Qty.	LET-2000 Type II Qty.	LET-2000 Type III Qty.	ET-2000 Type II Qty.	ET-2000 Type III Qty.	DESCRIPTION
62G	1	1	1	1	1	#1 Deep Beam Guardrail (12 Ga) at 25'
60G	1	1	1	1	1	#2 Deep Beam Guardrail (12 Ga) at 25'
732G	2	2	2	-	-	Steel Tube - 6"x 8"x 78"x ⅜"
740G	0	2	6	4	8	Steel Tube - 6"x 8"x 54"x ⅜"
766G	0	2	6	4	8	Soil Plate - 18"x 24"x ¼"
4147B	2	4	8	4	8	Wood Posts - 5 ½" x 7 ½" x 45"
4063B	6	4	0	4	0	Wood CRT Posts - 6"x 8"x 72"
4075B	6	6	6	7	7	Wood Block - 6"x 8"x 14"
705G	1	1	1	1	1	Pipe Sleeve - 2" std. pipe x 5 ½"
782G	1	1	1	1	1	Bearing Plate - 8"x 8"x ⅝"
704A	1	1	1	1	1	Cable Anchor
3000G	1	1	1	1	1	Cable Assembly (¾" x 78")
9852A	1	1	1	-	-	Inline Strut
9918A	-	-	-	1	1	Offset Strut
985A	1	1	1	1	1	ET-2000 Guardrail Terminal
HARDWARE						
3497G	2	4	8	4	8	⅝" x 9 ½" Hex Hd. Bolt (Top of tubes)
3300G	11	11	11	11	11	⅝" Washers
3478G	2	4	8	8	16	⅝" x 7 ½" Hex Bolt
3500G	1	1	1	-	-	⅝" x 10" Post Bolt (Post 2 of LET)
3580G	6	6	6	7	7	⅝" x 18" HGR Post Bolt (posts ③ thru ⑧)
3360G	16	16	16	16	16	⅝" x 1 ¼" HGR Splice Bolt
3340G	27	31	39	35	47	⅝" HGR Nut (16-spl, 7-posts, 2-strut, 2 each at tube ③ thru ⑧)
4228G	2	2	2	2	2	⅜" x 4" Lag Screw
3910G	2	2	2	2	2	1" Hex Nut (Anchor Cable)
3900G	2	2	2	2	2	1" Washer (Anchor Cable)
3177B	1	1	1	1	1	Object Marker (18" x 18")

R = Radius
D = Diameter

Texas Department of Transportation
Design Division (Roadway)

SINGLE GUARDRAIL TERMINAL

(LET-2000 & ET-2000)

SGT(6)-97

FILE: sgt697.dgn	DN: MAM	CK: MAM	DW: BGD	CK:	NEG: R0000
©TxDOT APRIL 1997	DIST	FED REG	FEDERAL AID PROJECT		SHEET
REVISIONS	22	6	NH99(462)		377

COUNTY	CONTROL	SECT	JOB	HIGHWAY
WEBB	0018	06	131	IH35

DISCLAIMER:
The use of this standard is governed by the "Texas Engineering Practice Act". No warranty of any kind is made by TxDOT for any purpose whatsoever. TxDOT assumes no responsibility for the conversion of this standard to other formats or for incorrect results or damages resulting from its use.

LEVELS DISPLAYED

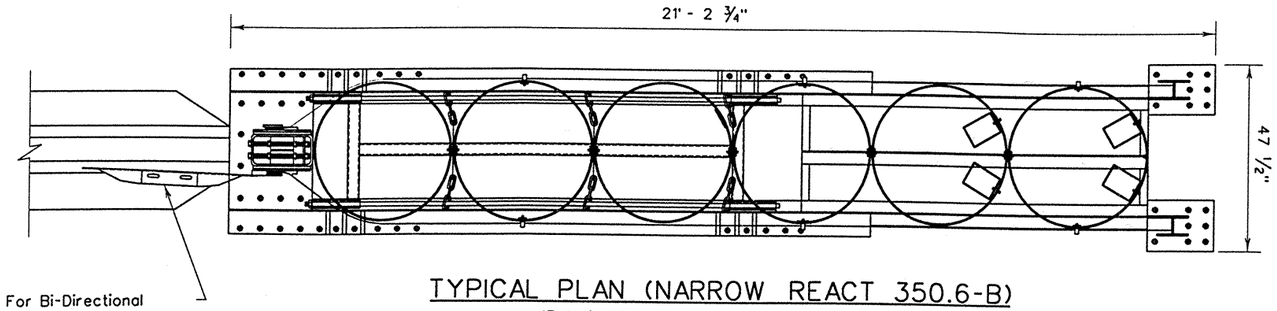

TYPICAL PLAN (NARROW REACT 350.6-B)

(Polyvinyl Cover not shown for clarity)

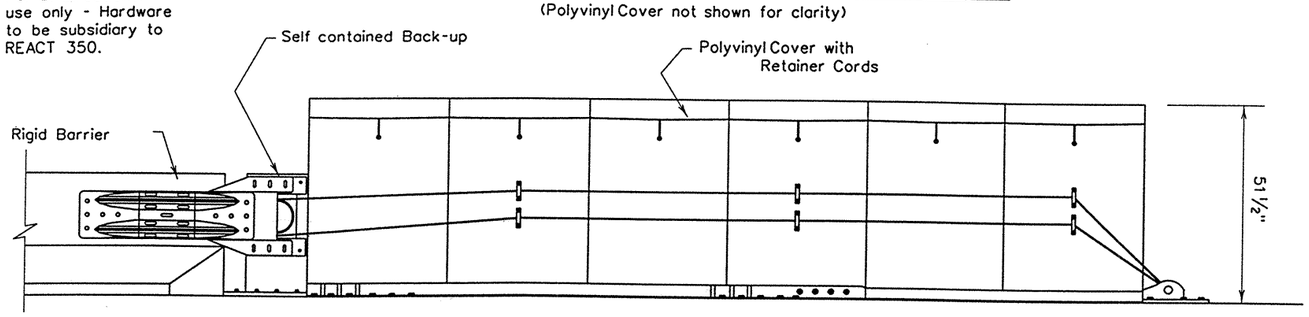

TYPICAL ELEVATION (NARROW REACT 350.6-B)

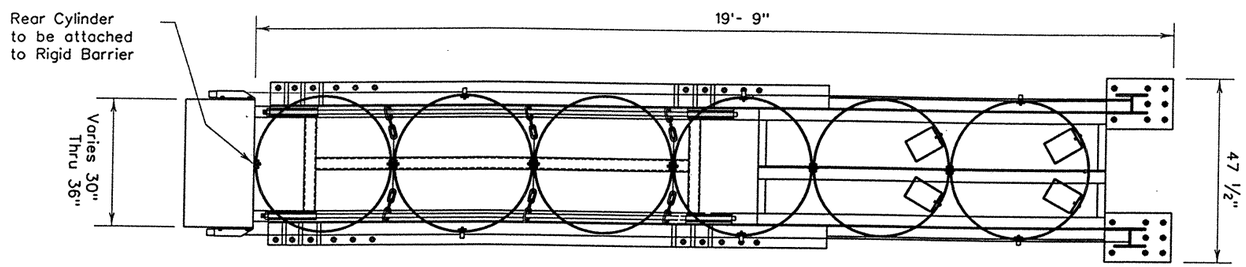

TYPICAL PLAN (NARROW REACT 350.6-S)

(Polyvinyl Cover not shown for clarity)

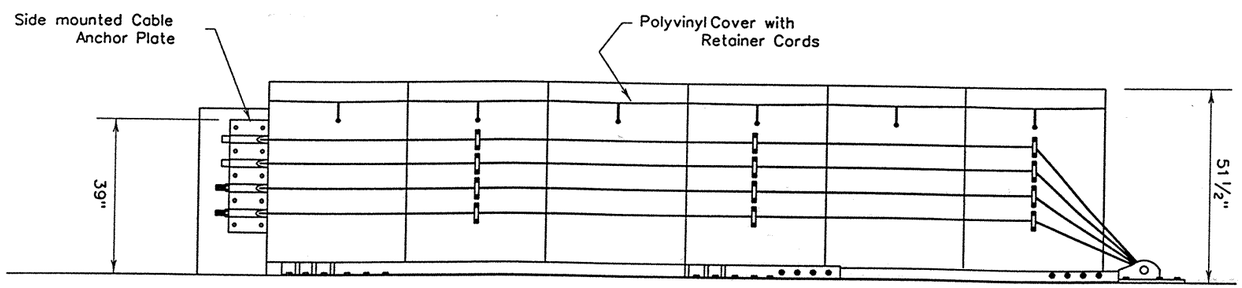

TYPICAL ELEVATION (NARROW REACT 350.6-S)

GENERAL NOTES

1. All REACT 350 units have self containing back-up units unless otherwise noted.
2. The nose of the REACT 350 shall be clad with a plastic wrap with standard (TEXAS MUTCD) delineation adhered to the wrap and shall have a series of reflectors on both sides of the unit.
3. All steel components to be hot dipped galvanized except stakes, drive spikes, threaded bolts in backup unit, and swedge fittings on cables.
4. Contact Roadway Safety Service Engineering if REACT 350 is to span expansion joints.

DESIGN DATA

	REACT 350.4-B	REACT 350.4-S	REACT 350.6-B	REACT 350.6-S	REACT 350.9-B	REACT 350.9-S	REACT 350 HS-B	REACT 350 HS-S
DESIGN SPEED	45 MPH	45 MPH	55 MPH	55 MPH	65 MPH	65 MPH	70 MPH	70 MPH
OVERALL LENGTH	15'-3"	13'-9"	21'-3"	19'-9"	30'-3"	28'-9"	30'-3"	28'-9"
UNIT HEIGHT	4'-3½"	4'-3½"	4'-3½"	4'-3½"	4'-3½"	4'-3½"	4'-3½"	4'-3½"
OVERALL WEIGHT	2580 lb.	2340 lb.	3340 lb.	3100 lb.	4310 lb.	4070 lb.	4520 lb.	4280 lb.

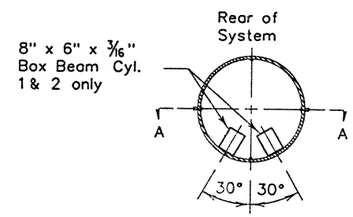

PLAN

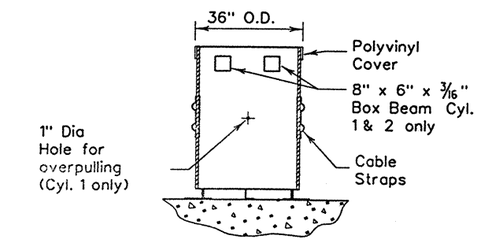

TYPICAL CYLINDER

SECTION A-A

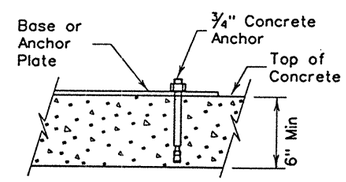

CONCRETE PAVEMENT DETAIL

NOTE: If separate slab is required for REACT, then the slab thickness shall be 8"

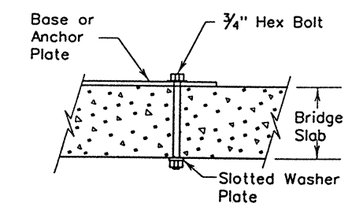

BRIDGE DECK DETAIL

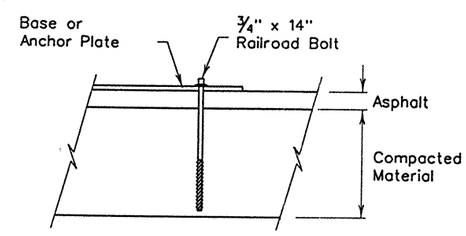

ASPHALT PAVEMENT DETAIL

Min. Asphalt thickness shall be 2"

DISCLAIMER
The use of this standard is governed by the Texas Engineering Practice Act. No warranty of any kind is made by TxDOT for any purpose whatsoever. TxDOT assumes no responsibility for the conversion of this standard to other formats or for incorrect results or damages resulting from its use.

LEVELS DISPLAYED

1	3

Texas Department of Transportation
Design Division (Roadway)

REUSABLE ENERGY ABSORBING CRASH TERMINAL (NARROW REACT 350)

REACT(N)-99

SHEET 1 OF 2

FILE: reactn99.dgn	DN:	CK:	DW: BGD	CK: MAM
© TxDOT FEBRUARY 1998	DIST	FED REG	FEDERAL AID PROJECT	SHEET
REVISIONS	22	6	NH99(462)	378

COUNTY	CONTROL	SECT	JOB	HIGHWAY
WEBB	0018	06	131	IH35

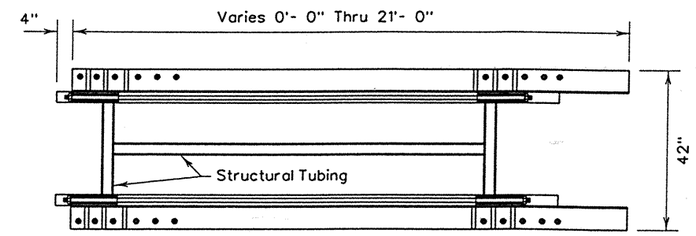

REAR SECTION OF BASE TRACK
(FOR UNITS WITH OUT SELF CONTAINED BACK-UP ONLY)

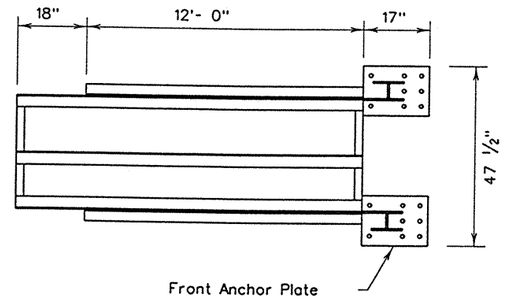

FRONT SECTION OF BASE TRACK

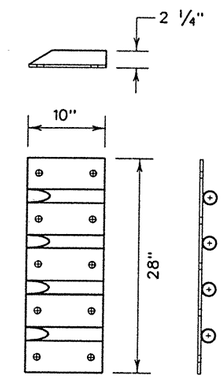

SIDE CABLE ANCHOR PLATE
(FOR UNITS WITHOUT A SELF CONTAINED BACK-UP ONLY)

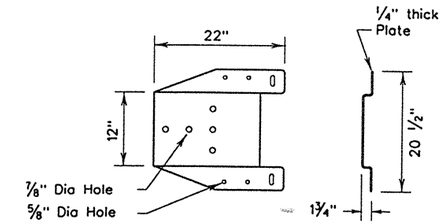

FOLDED TRANSITION PLATE
(For use in transition applications)

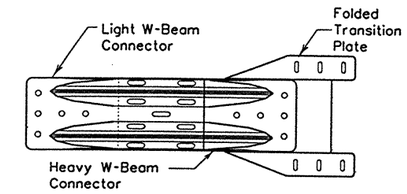

TRANSITION PLATE WITH W-BEAM CONNECTOR
(For two-way traffic operations: one side only)

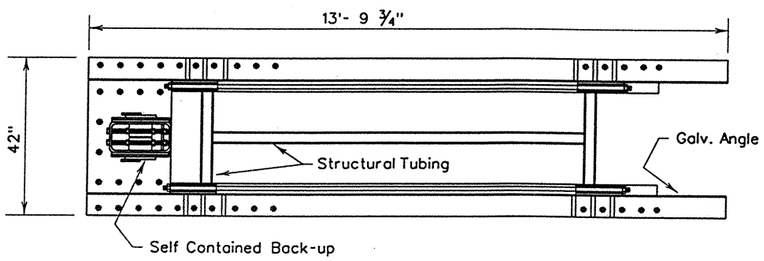

REAR SECTION OF BASE TRACK
(FOR UNITS WITH SELF CONTAINED BACK-UP ONLY)

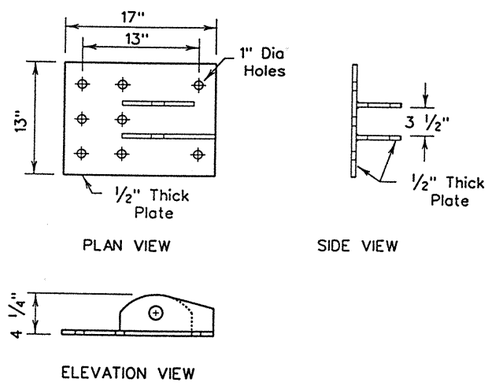

FRONT ANCHOR PLATE DETAIL

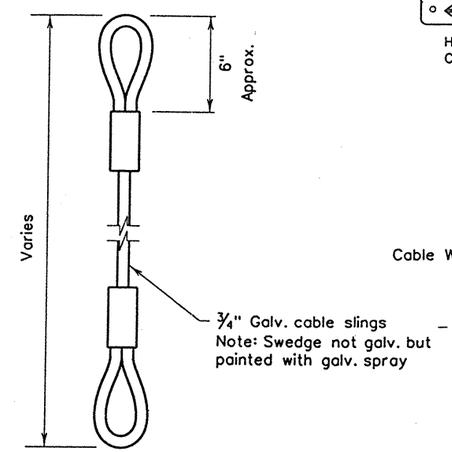

CABLE DETAIL
(FOR UNITS WITH SELF CONTAINED BACK-UP ONLY)

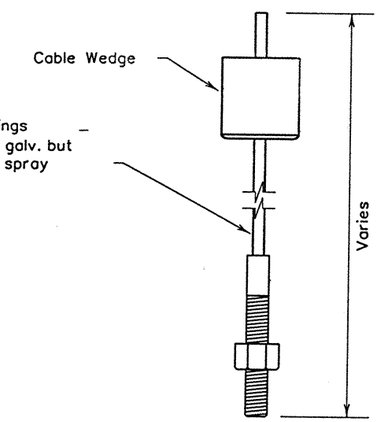

CABLE DETAIL
(FOR UNITS WITH SELF CONTAINED BACK-UP ONLY)

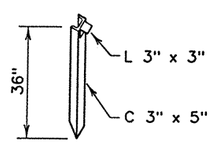

CHANNEL STAKE
(FOR USE W/ASPHALT PAVEMENT)

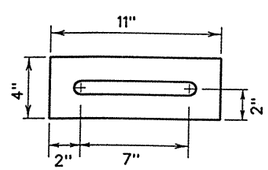

SLOTTED WASHER PLATE
(FOR BRIDGE DECK APPLICATIONS ONLY)

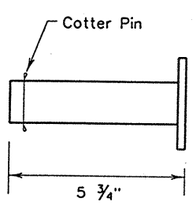

FRONT ANCHOR PIN DETAIL

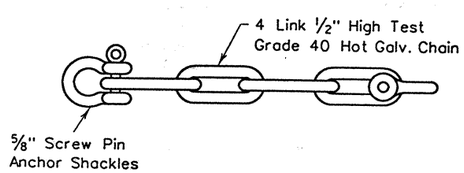

CHAIN DETAIL

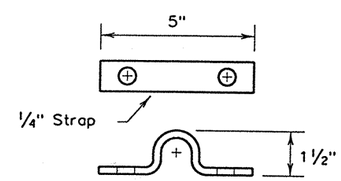

CABLE STRAP

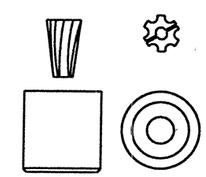

CABLE WEDGE

Texas Department of Transportation
Design Division (Roadway)

REUSABLE ENERGY ABSORBING CRASH TERMINAL (NARROW REACT 350)

REACT(N)-99

SHEET 2 OF 2

FILE: reactn99.dgn	DN:	CK:	DW: BGD	CK: MAM
© TxDOT FEBRUARY 1998	DIST	FED. REG.	FEDERAL AID PROJECT	SHEET
REVISIONS	22	6	NH99(462)	379
	COUNTY		CONTROL / SECT / JOB	HIGHWAY
	WEBB		0018 06 131	IH35

DISCLAIMER :
The use of this standard is governed by the Texas Engineering Practice Act. No warranty of any kind is made by TxDOT for any purpose whatsoever. TxDOT assumes no responsibility for the conversion of this standard to other formats or for incorrect results or damages resulting from its use.

LEVELS DISPLAYED

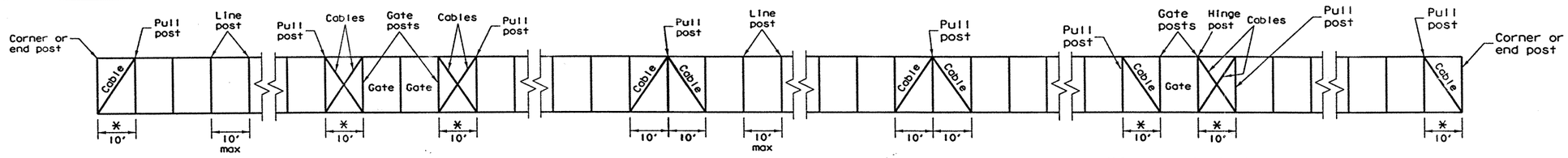

TYPICAL CABLE AND POST ARRANGEMENT

* Slack span for fabric

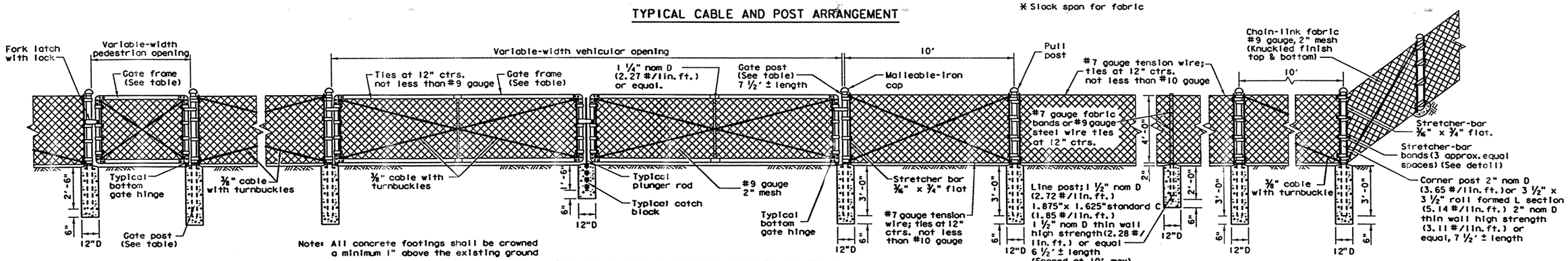

Note: All concrete footings shall be crowned a minimum 1" above the existing ground

CHAIN-LINK BARRIER FENCE (4 FT.)

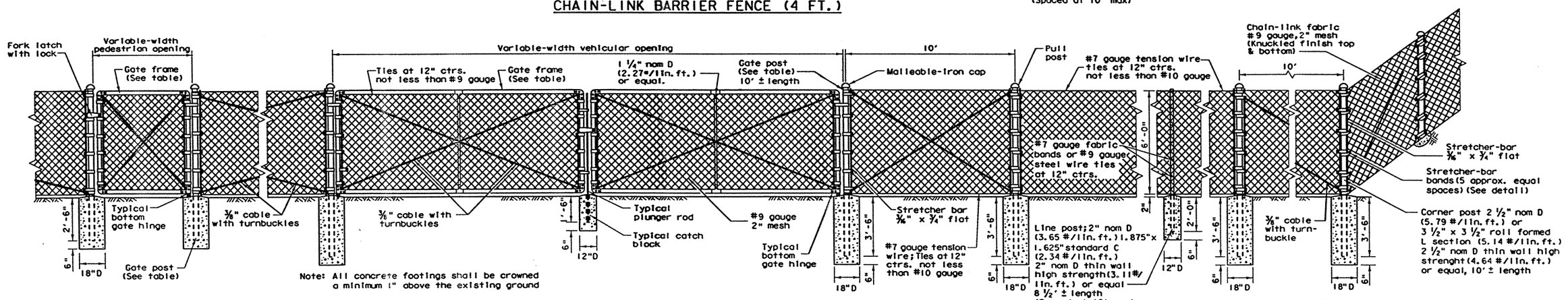

Note: All concrete footings shall be crowned a minimum 1" above the existing ground

CHAIN-LINK BARRIER FENCE (6 FT.)

GENERAL NOTES

1. Typical installation plan may vary as shown elsewhere on the plans or as directed by the Engineer. Location of gates shown elsewhere on plans.
2. Gate-frame members shall be bolted, at frame corners, to joint fittings with four 1/2" bolts per joint.
3. All cable connections are to be made with two 3/8" cable clamps.
4. All pull posts and end posts and their foundations shall have the same respective dimensions as those shown for corner post.
5. All pull post shall be furnished with two stretcher bars.
6. One end of each turnbuckle may be attached directly to fittings with a clevis.

TABLE OF MINIMUM SIZES & WEIGHTS

GATE OPENING TYPE	
Single Inclusive	Double Inclusive
Up to 6'	Up to 12'
Over 6' to 12'	Over 12' to 26'
Over 12' to 18'	Over 26' to 36'
Over 18'	Over 36'

GATE FRAME		GATE POST	
SIZE	WT./LIN. FT.	SIZE	WT./LIN. FT.
1 1/2" nom D or equal	2.72 LBS.	2 1/2" nom D or equal	5.79 LBS.
	2.72 LBS.	3 1/2" nom D or equal	9.11 LBS.
	2.72 LBS.	6" nom D	18.97 LBS.
	2.72 LBS.	8" nom D	24.70 LBS.

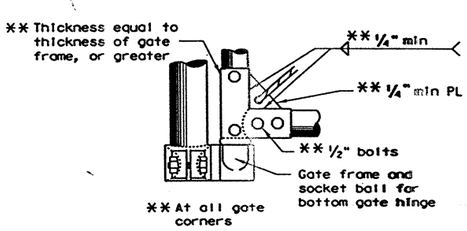

TYPICAL BOTTOM GATE HINGE

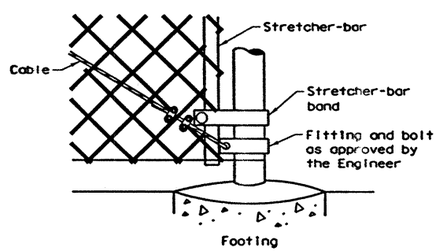

TERMINAL POST DETAIL

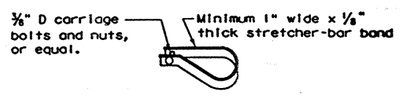

TYPICAL STRETCHER-BAR BAND

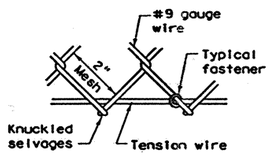

FABRIC & TENSION WIRE DETAIL TOP & BOTTOM

R = Radius
D = Diameter

Texas Department of Transportation
Design Division (Roadway)

CHAIN-LINK BARRIER FENCE

4 AND 6 FOOT HEIGHT

CLF-96

FILE: CLF96.DGN	DN: HEJ	CK: HEJ	DW: BGD	CK:	NEG:	
© TxDOT 1996	DIST	FED REG	FEDERAL AID PROJECT			SHEET
REVISIONS	22	6	NH 99(462)			380
	COUNTY		CONTROL	SECT	JOB	HIGHWAY
	KEBB		0018	06	131	1435

DISCLAIMER:
The use of this standard is governed by the "Texas Engineering Practice Act". No warranty of any kind is made by TxDOT for any purpose whatsoever. TxDOT assumes no responsibility for the conversion of this standard to other formats or for incorrect results or damages resulting from its use.

LEVELS DISPLAYED

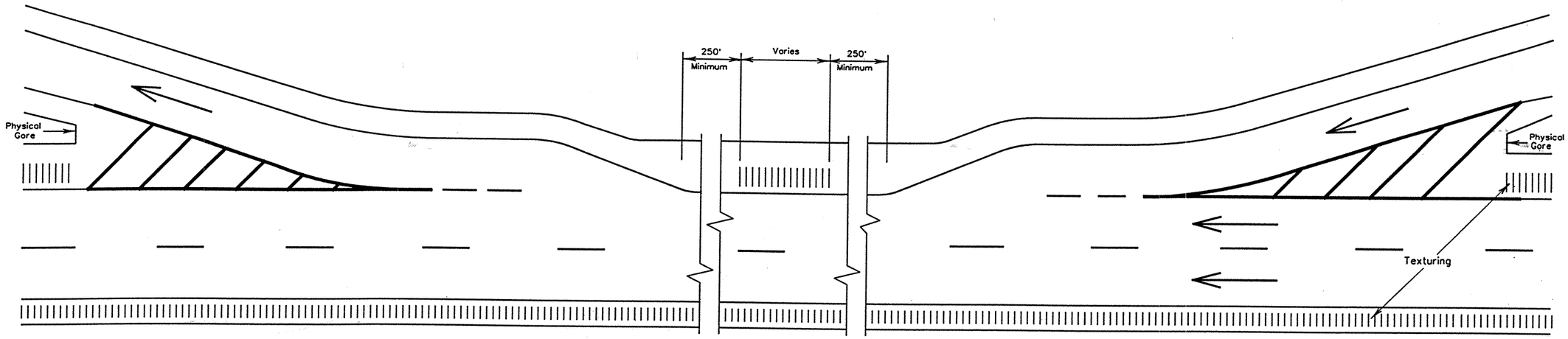

TYPICAL TEXTURING PLACEMENT AT EXIT AND ENTRANCE RAMPS

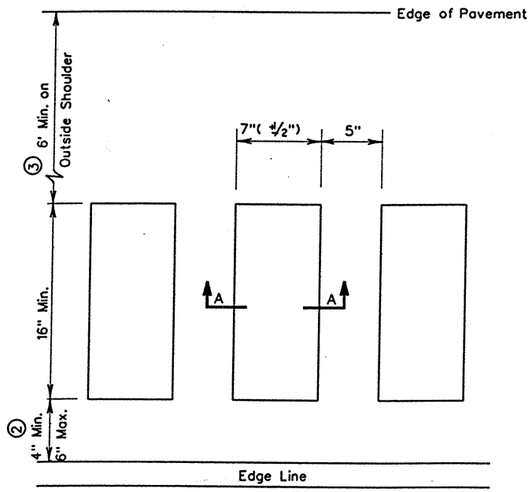

PLAN VIEW

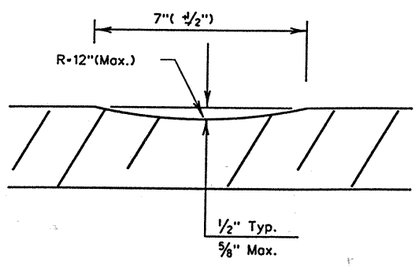

SECTION A-A

OPTION 1: CONTINUOUS MILLED DEPRESSIONS

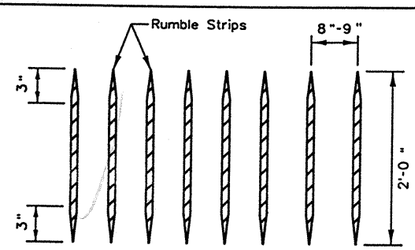

PLAN VIEW

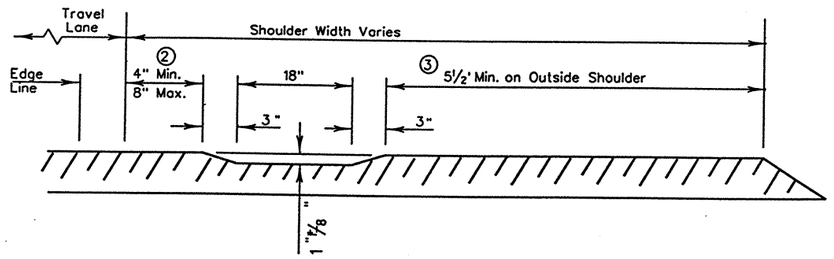

TYPICAL SECTION

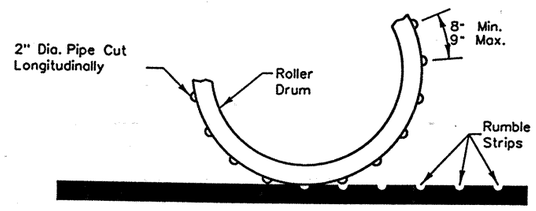

ROLLER DRUM DETAIL

OPTION 2: CONTINUOUS ROLLED DEPRESSIONS

GENERAL NOTES

① Extreme caution shall be taken at all times to avoid texturing at locations other than those designated on the plans. Texturing shall not be placed across intersecting streets ramps acceleration and deceleration lanes crossovers or gore areas.

② The minimum distance between the edgeline and the texturing should be used if the shoulder is 6 feet or less in width.

③ The minimum width on the outside shoulder between the rumble strip and the edge of the pavement may be reduced in special situations, such as narrower shoulders, only as directed by the Engineer.

R = Radius
D = Diameter

Texas Department of Transportation
Design Division (Pavement)

DEPRESSED SHOULDER TEXTURING

ST(1)-96

FILE: ST196.DGN	DN: CCH	CK: MAM	DW:	CK:	NEG:	
© TxDOT JANUARY 1994	DIST	FED REG	FEDERAL AID PROJECT			SHEET
REVISIONS	LAR	6				380A
	COUNTY		CONTROL	SECT	JOB	HIGHWAY
	WEBB		0018	06	131	IH 35

DISCLAIMER :
The use of this stand[illegible] governed by the Texas Engineering Practice Act. No warranty of any [illegible] made by TxDOT for any purpose whatsoever. TxDOT assumes no respon[illegible] for the conversion of this standard to other formats or for incorrect results or damages resulting from its use.

LEVELS

DRAINAGE AREA 4F
ADDITIONAL HYDROLOGIC DATA

OF CHANNELS = 0
OF SUBAREAS = 1
OF TIMESTEPS = 300 @ 0.10 HRS EACH
RAINFALL DURATION = 24 HRS
RAINFALL DEPTH = 7.6" (25 YR), 8.6" (50 YR), 9.8" (100 YR)
SCS RAINFALL DISTRIBUTION = TYPE III

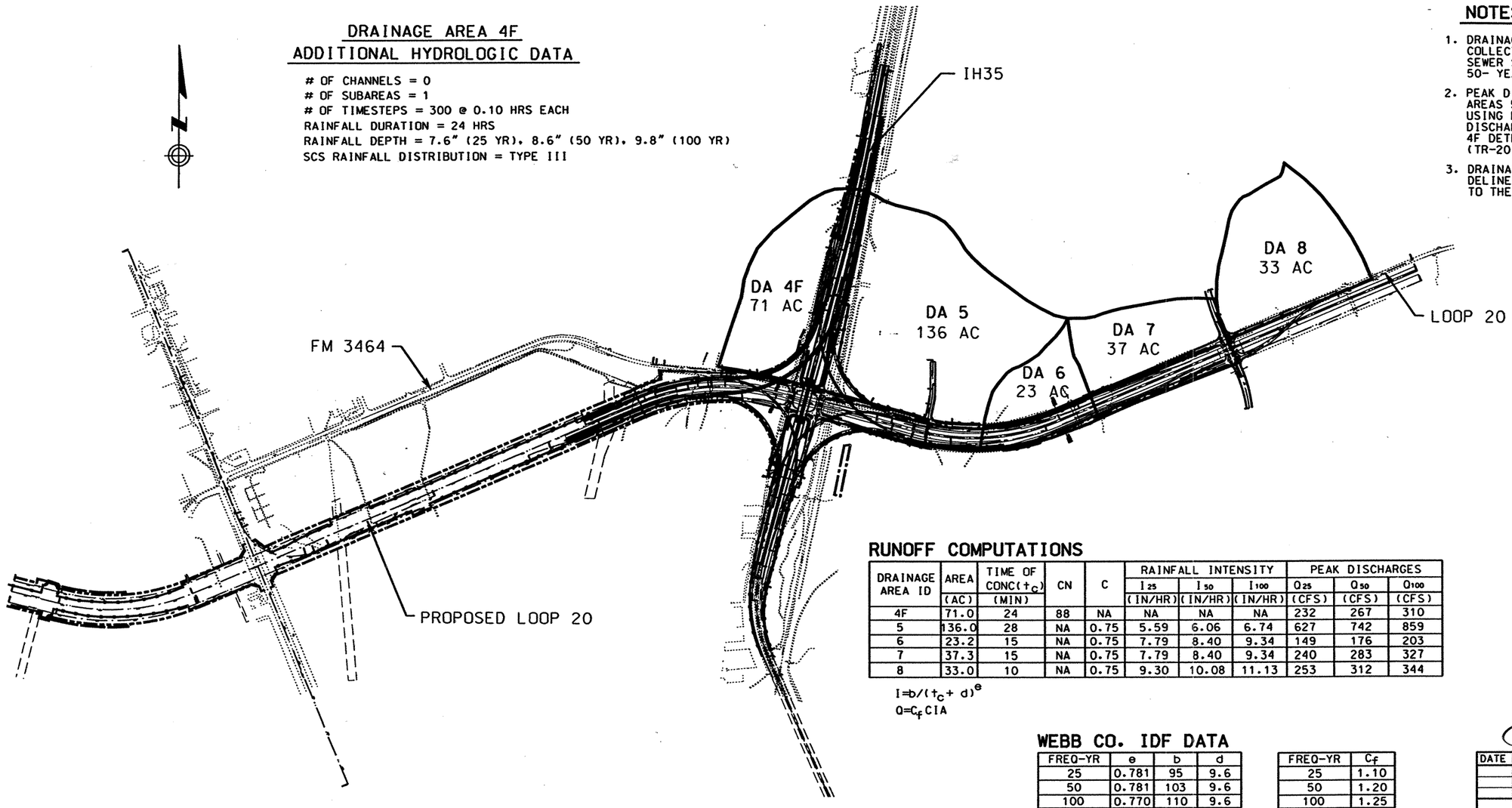

NOTES:

1. DRAINAGE AREAS 4f AND 5 ARE COLLECTED IN AN ONSITE STORM SEWER SYSTEM DESIGNED FOR A 50- YEAR STORM EVENT.
2. PEAK DISCHARGES FOR DRAINAGE AREAS 5 THROUGH 8 DETERMINED USING RATIONAL METHOD. DISCHARGE FOR DRAINAGE AREA 4F DETERMINED USING SCS HYDRO (TR-20).
3. DRAINAGE AREAS 5,6 AND 7 ARE DELINEATED TO INCLUDE ALL AREA TO THE SOUTH RIGHT OF WAY.

RUNOFF COMPUTATIONS

DRAINAGE AREA ID	AREA (AC)	TIME OF CONC(t_c) (MIN)	CN	C	RAINFALL INTENSITY I_{25} (IN/HR)	I_{50} (IN/HR)	I_{100} (IN/HR)	PEAK DISCHARGES Q_{25} (CFS)	Q_{50} (CFS)	Q_{100} (CFS)
4F	71.0	24	88	NA	NA	NA	NA	232	267	310
5	136.0	28	NA	0.75	5.59	6.06	6.74	627	742	859
6	23.2	15	NA	0.75	7.79	8.40	9.34	149	176	203
7	37.3	15	NA	0.75	7.79	8.40	9.34	240	283	327
8	33.0	10	NA	0.75	9.30	10.08	11.13	253	312	344

$I = b/(t_c + d)^e$
$Q = C_f C I A$

WEBB CO. IDF DATA

FREQ-YR	e	b	d
25	0.781	95	9.6
50	0.781	103	9.6
100	0.770	110	9.6

FREQ-YR	C_f
25	1.10
50	1.20
100	1.25

CULVERT HYDRAULIC COMPUTATIONS

DRAINAGE AREA NO.	CULV NO.	STATION	FREQ.-YR	DRAINAGE AREA (AC)	TIME OF CONC.(MIN)	Q_{50} (CFS)	TAILWATER ELEV (FT)	STRUCTURE DESCRIPTION	LENGTH** (FT)	KE	HW_{MAX} ELEV (FT)	HW_{CALC} ELEV (FT)	VELOCITY (FPS)	INLET ELEV (FT)	OUTLET ELEV (FT)	SLOPE %	LENGTH CONSTRUCTED	WATER ON ROAD
			25			149	531.25	8'x4' SBC SC-30°-C W/PW-30°				536.16	4.66					NO
6	6	470+09.00	50	23.2	15	176	531.50		418	0.2	536.80	536.61	5.50	532.78	526.00	1.620	103	NO
			100			203	531.75					537.05	6.34					YES
			25			240	529.75	2-6'x4' MBC MC6-2 W/MCW-P-30°				535.57	6.39					NO
7	7*	479+61.57	50	37.3	15	283	530.00		423	0.2	538.00	536.06	6.99	531.96	526.57	3.455/0.196	102	NO
			100			327	530.25					536.56	7.53					NO
			25			253	533.75	2-6'x4' MBC MC6-1 W/MCW-P				535.84	8.43					NO
8	8	505+72.00	50	33.0	10	312	534.00		374	0.2	537.00	536.43	9.42	531.93	531.25	0.182	90	NO
			100			344	534.25					536.74	9.56					NO

ALLOWABLE HEAD WATER ELEVATION (HW_{MAX}) IS SET FROM ASSUMED FUTURE ELEVATION OF WESTBOUND FRONTAGE ROAD

* BROKEN BACK CULVERT
** ULTIMATE LENGTH

STATE OF TEXAS
SAMUEL M. WATSON
73121
REGISTERED PROFESSIONAL ENGINEER

The seal appearing on this document was authorized by Samuel M. Watson, P.E. 73121, on April 2, 1999

DATE	BY	REV	REVISION

© 1999 Texas Department of Transportation

Brown & Root
HOUSTON, TEXAS

IH 35
OFFSITE
DRAINAGE AREA MAP
AND
CULVERT COMPUTATIONS

SCALE: 1"=1500'

SHEET 1 OF 1

FED RD DIV NO	STATE PROJECT NO	SHEET NO
6	NH-99(462)	301

STATE	STATE DIST NO	COUNTY
TEXAS	22	WEBB

CONT	SECT	JOB	HIGHWAY NO
0018	06	131	IH 35

REF FILE(S): J01LOX01.BDR. BDR
LV ON = 5.45.57.60-63
D13AMXO1.DGN-05 03-31-99 BAR_HO_ES05 \HCIVIL\CF0039\PHASE2

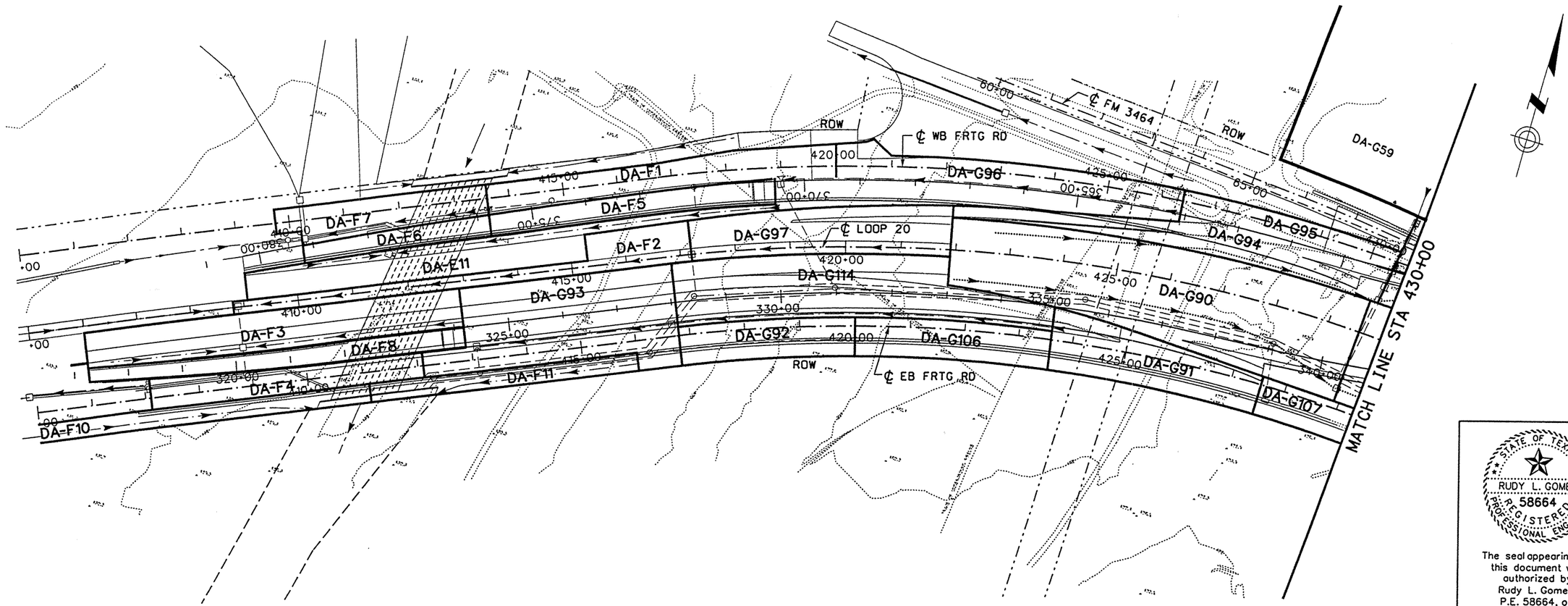

DRAINAGE AREA ID	TOTAL DA ACRE	AREAS ACRES C FACTORS 0.90	0.65	0.35	Cw	Cw x A	TIME OF CONC MIN	I 10 YR IN/HR	Q 10 YR CFS
E11	1.49	1.49			0.90	1.34	10.00	8.30	11.13
F1	0.24	0.24			0.90	0.22	10.00	8.30	1.79
F2	0.65	0.19		0.46	0.51	0.33	10.00	8.30	2.76
F3	1.06	1.06			0.90	0.95	10.00	8.30	7.92
F4	0.54	0.54			0.90	0.49	10.00	8.30	4.03
F5	0.10	0.10			0.90	0.09	10.00	8.30	0.75
F6	0.28	0.28			0.90	0.25	10.00	8.30	2.09
F7	0.48	0.34		0.14	0.74	0.36	10.00	8.30	2.95
F8	0.48	0.48			0.90	0.43	10.00	8.30	3.59
F10	0.58	0.09		0.49	0.44	0.25	10.00	8.30	2.10
F11	0.37	0.06		0.31	0.44	0.16	10.00	8.30	1.35
F15	0.37	0.35			0.85	0.32	10.00	8.30	2.61
F16	0.09	0.09			0.90	0.08	10.00	8.30	0.67
F18	0.11	0.11			0.90	0.10	10.00	8.30	0.82
F20	0.12	0.12			0.90	0.11	10.00	8.30	0.90

DRAINAGE AREA ID	TOTAL DA ACRE	AREAS ACRES C FACTORS 0.90	0.65	0.35	Cw	Cw x A	TIME OF CONC MIN	I 50 YR IN/HR	Q 50 YR CFS
G92	0.47	0.25		0.22	0.64	0.30	10.00	10.08	3.05
G93	1.55	1.50		0.05	0.88	1.37	10.00	10.08	13.78
G94	0.98	0.62		0.36	0.70	0.68	10.00	10.08	6.90
G95	0.35	0.35			0.90	0.32	10.00	10.08	3.18
G96	0.79	0.79			0.90	0.71	10.00	10.08	7.17
G97	0.97	0.71		0.26	0.75	0.73	10.00	10.08	7.36
G98	0.30			0.30	0.35	0.11	10.00	10.08	1.06
G99	1.43	0.50		0.93	0.54	0.78	10.00	10.08	7.82
G100	0.12			0.12	0.35	0.04	10.00	10.08	0.42
G101	0.12			0.12	0.35	0.04	10.00	10.08	0.42
G104	1.31	0.54		0.77	0.58	0.76	10.00	10.08	7.62
G105	1.19	0.65		0.54	0.65	0.77	10.00	10.08	7.80
G106	0.58	0.35		0.23	0.68	0.40	10.00	10.08	3.99
G107	0.6	0.36		0.24	0.68	0.41	10.00	10.08	4.11
G114	1.53	1.53			0.90	1.38	10.00	10.08	13.88

GENERAL NOTES:

1. DESIGN FREQUENCY:

a. ROADSIDE DITCH - 10 YEAR
b. CROSS CULVERT (FRONTAGE RD) - 25 YEAR
c. CROSS CULVERT (MAINLANES) - 50 YEAR
d. INLETS ON MAINLANES AND DIRECT CONNECTORS- 10 YEAR
e. INLETS FOR FRONTAGE ROADS - 5 YEAR
f. INLETS FOR DEPRESSED ROADWAYS - 25 YEAR
g. TRUNK SYSTEM FOR DEPRESED ROADWAY - 50 YEAR.
h. ALL OTHER TRUNK SYSTEM - 5 YEAR.

2. RUNOFF COEFFICIENTS (C)

a. GRASS - 0.35
b. FUTURE DEVELOPMENT - 0.65
c. PAVEMENT - 0.90

REV. 6-25-99

STATE OF TEXAS
RUDY L. GOMEZ
58664
REGISTERED PROFESSIONAL ENGINEER

The seal appearing on this document was authorized by Rudy L. Gomez P.E. 58664, on June 3, 1999.

DATE	BY	REV	REVISION
06/03/99	RD	1	DA G93, ADDED G114

© 1999 Texas Department of Transportation

Brown & Root
HOUSTON, TEXAS

LOOP 20

DRAINAGE AREA MAP
STA 405+00 TO STA 430+00

0 100 200
SCALE: 1"=200'

SHEET 1 OF 11

FED RD DIV NO	STATE PROJECT NO	SHEET NO
6	C86-14-23	382

STATE	STATE DIST NO	COUNTY
TEXAS	22	WEBB

CONT	SECT	JOB	HIGHWAY NO
0086	14	023	LOOP 20

D13DRX01.DGN-08 06-02-99 BAR_HO_ES05 \HCIVIL\CF0039\PHASE2

REF FILE(S): J01LOX01.DRN, DRN LV ON = LV ON = LV ON = LV ON = LV ON = LV ON =

REF FILE(S): J01LOX01.ROW, ROW LV ON = J01LOX01.FND, FND LV ON = J01LOX01.BCK, BCK LV ON = J01LOX01.ALG, ALG LV ON = J01LOX01.EOP, EOP LV ON = J01LOX01.BDR, BDR LV ON = 5,45,57,60-63

GENERAL NOTES:

1. FOR GENERAL NOTES SEE SHEET 1.

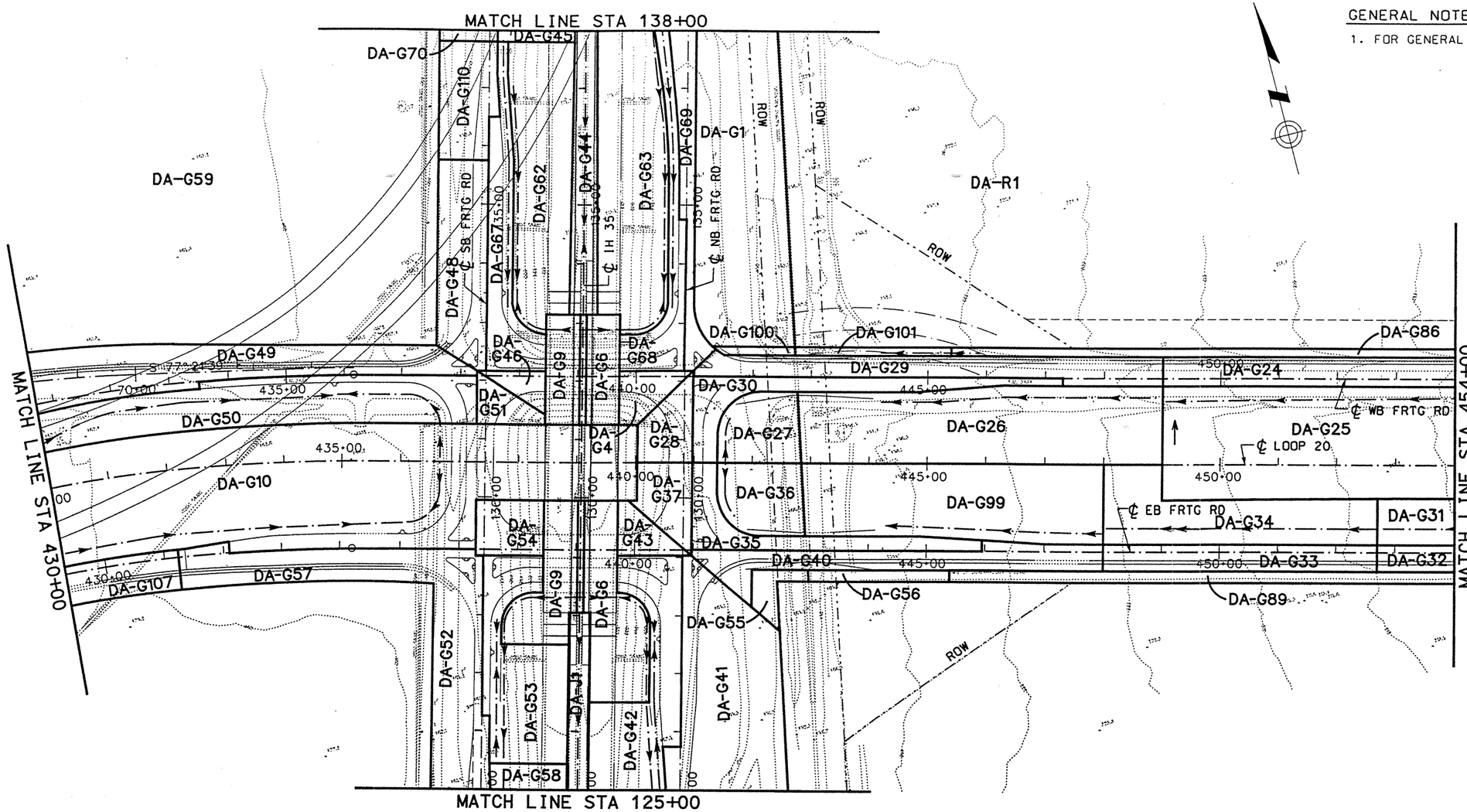

DRAINAGE AREA ID	TOTAL DA ACRE	AREAS ACRES C FACTORS 0.90	0.75	0.35	Cw	Cw x A	TIME OF CONC MIN	I 50 YR IN/HR	Q 50 YR CFS
R1	111.05		111.05		0.75	83.29	27.00	6.19	515.63

DRAINAGE AREA ID	TOTAL DA ACRE	AREAS ACRES C FACTORS 0.90	0.65	0.35	Cw	Cw x A	TIME OF CONC MIN	I 50 YR IN/HR	Q 50 YR CFS
G1	6.02			6.02	0.35	2.11	10.00	10.08	21.24
G4	0.16	0.10		0.06	0.69	0.11	10.00	10.08	1.12
G9	0.29	0.25		0.04	0.82	0.24	10.00	10.08	2.41
G10	4.25	2.92		1.33	0.73	3.09	10.00	10.08	31.19
G21	1.02	0.63		0.39	0.69	0.70	10.00	10.08	7.09
G22	1.11	0.73		0.38	0.71	0.79	10.00	10.08	7.97
G23	1.01	0.62		0.39	0.69	0.69	10.00	10.08	7.00
G24	0.59	0.47		0.12	0.79	0.47	10.00	10.08	4.69
G25	2.29	1.80		0.49	0.78	1.79	10.00	10.08	18.06
G26	1.81	0.62		1.19	0.54	0.97	10.00	10.08	9.83
G27	0.45	0.15		0.30	0.53	0.24	10.00	10.08	2.42

DRAINAGE AREA ID	TOTAL DA ACRE	AREAS ACRES C FACTORS 0.90	0.65	0.35	Cw	Cw x A	TIME OF CONC MIN	I 50 YR IN/HR	Q 50 YR CFS
G28	0.32	0.23		0.09	0.75	0.24	10.00	10.08	2.40
G29	0.55	0.55			0.90	0.50	10.00	10.08	4.99
G30	0.46	0.46			0.90	0.41	10.00	10.08	4.17
G31	0.79	0.43		0.36	0.65	0.51	10.00	10.08	5.17
G32	0.47	0.32		0.15	0.72	0.34	10.00	10.08	3.43
G33	0.70	0.44		0.26	0.70	0.49	10.00	10.08	4.91
G34	2.12	1.10		1.02	0.64	1.35	10.00	10.08	13.58
G35	0.42	0.42			0.90	0.38	10.00	10.08	3.81
G36	0.32	0.11		0.21	0.54	0.17	10.00	10.08	1.74
G37	0.26	0.14		0.12	0.65	0.17	10.00	10.08	1.69
G38	0.50	0.15		0.35	0.52	0.26	10.00	10.08	2.60
G39	0.50	0.15		0.35	0.52	0.26	10.00	10.08	2.60
G40	0.33	0.33			0.90	0.30	10.00	10.08	2.99
G41	1.45	0.57		0.88	0.57	0.82	10.00	10.08	8.28
G42	0.96	0.84		0.12	0.83	0.80	10.00	10.08	8.05
G43	0.15	0.09		0.06	0.68	0.10	10.00	10.08	1.03
G44	0.98			0.98	0.35	0.34	10.00	10.08	3.46
G45	1.36	0.82		0.54	0.68	0.93	10.00	10.08	9.35

SEE REVISION
REV. 6-25-99

STATE OF TEXAS
RUDY L. GOMEZ
58664
REGISTERED PROFESSIONAL ENGINEER

The seal appearing on this document was authorized by Rudy L. Gomez P.E. 58664, on June 3, 1999.

DATE	BY	REV	REVISION
6/3/99	RG	01	TABLES & NOTES

© 1999 Texas Department of Transportation

Brown & Root
HOUSTON, TEXAS

LOOP 20

DRAINAGE AREA MAP
STA 430+00 TO STA 455+00

0 100 200
SCALE: 1"=200'

SHEET 2 OF 11

FED RD DIV NO	STATE PROJECT NO	SHEET NO
6	C86-14-23	383

STATE	STATE DIST NO	COUNTY
TEXAS	22	WEBB

CONT	SECT	JOB	HIGHWAY NO
0086	14	023	LOOP 20

D13ORXO2.DGN-12 06-02-99 BAR_HO_ES05 \HCIVIL\CF0039\PHASE2

REF FILE(S): J01LOXO1.ROW, ROW, LV ON = J01LOXO1.FND, FND LV ON = J01LOXO1.BCK, BCK LV ON = J01LOXO1.ALG, ALG LV ON = J01LOXO1.EDP, EDP LV ON = J01LOXO1.BDR, BDR LV ON = 5,45,57,60-63

REF FILE(S): J01LOXO1.DRN, DRN LV ON = LV ON = LV ON = LV ON = LV ON = LV ON =

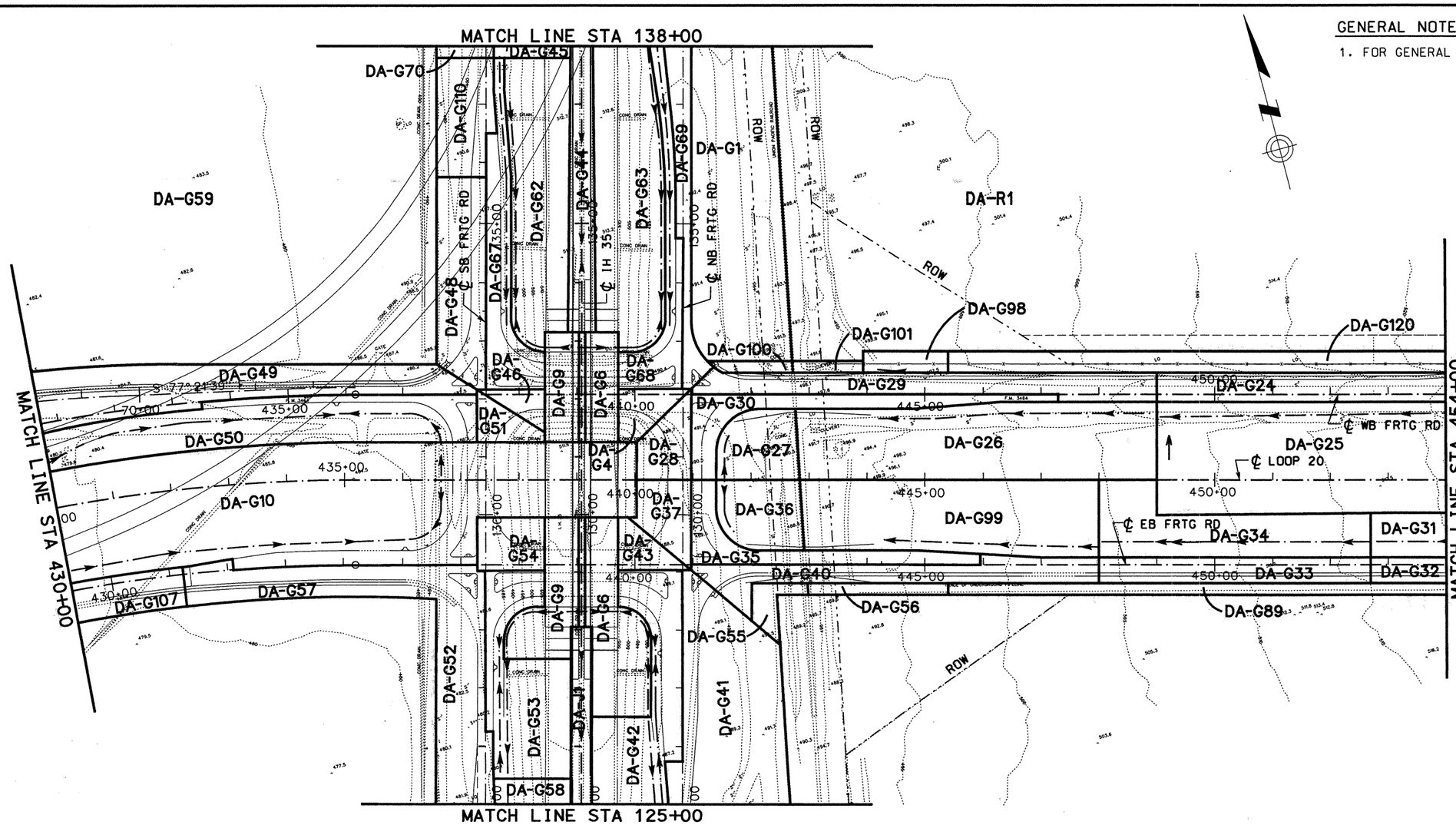

GENERAL NOTES:

1. FOR GENERAL NOTES SEE SHEET 1.

DRAINAGE AREA ID	TOTAL DA ACRE	AREAS ACRES C FACTORS 0.90	0.75	0.35	Cw	Cw x A	TIME OF CONC MIN	I 50 YR IN/HR	Q 50 YR CFS
R1	111.05		111.05		0.75	83.29	27.00	6.19	515.63

DRAINAGE AREA ID	TOTAL DA ACRE	AREAS ACRES C FACTORS 0.90	0.65	0.35	Cw	Cw x A	TIME OF CONC MIN	I 50 YR IN/HR	Q 50 YR CFS
G1	6.02			6.02	0.35	2.11	10.00	10.08	21.24
G4	0.16	0.10		0.06	0.69	0.11	10.00	10.08	1.12
G9	0.29	0.25		0.04	0.82	0.24	10.00	10.08	2.41
G10	4.25	2.92		1.33	0.73	3.09	10.00	10.08	31.19
G21	1.02	0.63		0.39	0.69	0.70	10.00	10.08	7.09
G22	1.11	0.73		0.38	0.71	0.79	10.00	10.08	7.97
G23	1.01	0.62		0.39	0.69	0.69	10.00	10.08	7.00
G24	0.59	0.47		0.12	0.79	0.47	10.00	10.08	4.69
G25	2.29	1.80		0.49	0.78	1.79	10.00	10.08	18.06
G26	1.81	0.62		1.19	0.54	0.97	10.00	10.08	9.83
G27	0.45	0.15		0.30	0.53	0.24	10.00	10.08	2.42
G28	0.32	0.23		0.09	0.75	0.24	10.00	10.08	2.40
G29	0.55	0.55			0.90	0.50	10.00	10.08	4.99
G30	0.46	0.46			0.90	0.41	10.00	10.08	4.17
G31	0.79	0.43		0.36	0.65	0.51	10.00	10.08	5.17
G32	0.47	0.32		0.15	0.72	0.34	10.00	10.08	3.43
G33	0.70	0.44		0.26	0.70	0.49	10.00	10.08	4.91
G34	2.12	1.10		1.02	0.64	1.35	10.00	10.08	13.58
G35	0.42	0.42			0.90	0.38	10.00	10.08	3.81
G36	0.32	0.11		0.21	0.54	0.17	10.00	10.08	1.74
G37	0.26	0.14		0.12	0.65	0.17	10.00	10.08	1.69
G38	0.50	0.15		0.35	0.52	0.26	10.00	10.08	2.60
G39	0.50	0.15		0.35	0.52	0.26	10.00	10.08	2.60
G40	0.33	0.33			0.90	0.30	10.00	10.08	2.99
G41	1.45	0.57		0.88	0.57	0.82	10.00	10.08	8.28
G42	0.96	0.84		0.12	0.83	0.80	10.00	10.08	8.05
G43	0.15	0.09		0.06	0.68	0.10	10.00	10.08	1.03
G44	0.98			0.98	0.35	0.34	10.00	10.08	3.46
G45	1.36	0.82		0.54	0.68	0.93	10.00	10.08	9.35

STATE OF TEXAS
RUDY L. GOMEZ
58664
REGISTERED PROFESSIONAL ENGINEER

The seal appearing on this document was authorized by Rudy L. Gomez P.E. 58664, on September 30, 1999.

DATE	BY	REV	REVISION
6/3/99	RG	01	TABLES & NOTES
9/28/99	RG	02	DA G98 MODIFIED

© 1999 Texas Department of Transportation

Brown & Root
HOUSTON, TEXAS

LOOP 20

DRAINAGE AREA MAP
STA 430+00 TO STA 455+00

0 100 200
SCALE: 1"=200'

SHEET 2 OF 11

FED RD DIV NO	STATE PROJECT NO	SHEET NO
6	C86-14-23	383

STATE	STATE DIST NO	COUNTY
TEXAS	22	WEBB

CONT	SECT	JOB	HIGHWAY NO
0086	14	023	LOOP 20

REF FILE(S): J01LDX01.ROW, ROW LV ON = 1-20,22-61,63
J01LDX01.BCK, BCK LV ON = 2-28,30-34,36,37,39,41-53,55,56,58-63
J01LDX01.ALG, ALG LV ON = 1,2,,4,5,6,10,13-15,18,19,25,26,28-34,38,39
J01LDX01.EOP, EOP LV ON = 1-16,19-26,28-30,32-47
J01LDX01.BDR, BDR LV ON = 5,45,57,60-63

REF FILE(S): J01LDX01.DRN, DRN LV ON = 1,3-6,10-13,15,49,51-63

D13DRX02.DGN-14 09-28-99 BAR_HO_ES05 \HCIVIL\CF0039\PHASE2

DRAINAGE AREA ID	TOTAL DA ACRE	AREAS ACRES C FACTORS 0.90	0.65	0.35	Cw	Cw x A	TIME OF CONC MIN	I 10 YR IN/HR	Q 10 YR CFS
H1	0.61	0.22		0.39	0.55	0.33	10.00	8.30	2.78
H2	0.59	0.24		0.35	0.57	0.34	10.00	8.30	2.81
H3	2.70	1.91		0.79	0.74	2.00	10.00	8.30	16.57
H4	2.02	1.32		0.70	0.71	1.43	10.00	8.30	11.90
H5	2.30	0.81		1.49	0.54	1.25	10.00	8.30	10.38
H6	3.13	0.75		2.38	0.48	1.51	10.00	8.30	12.52
H7	0.40	0.07		0.33	0.45	0.18	10.00	8.30	1.48
H8	0.31	0.05		0.26	0.44	0.14	10.00	8.30	1.13

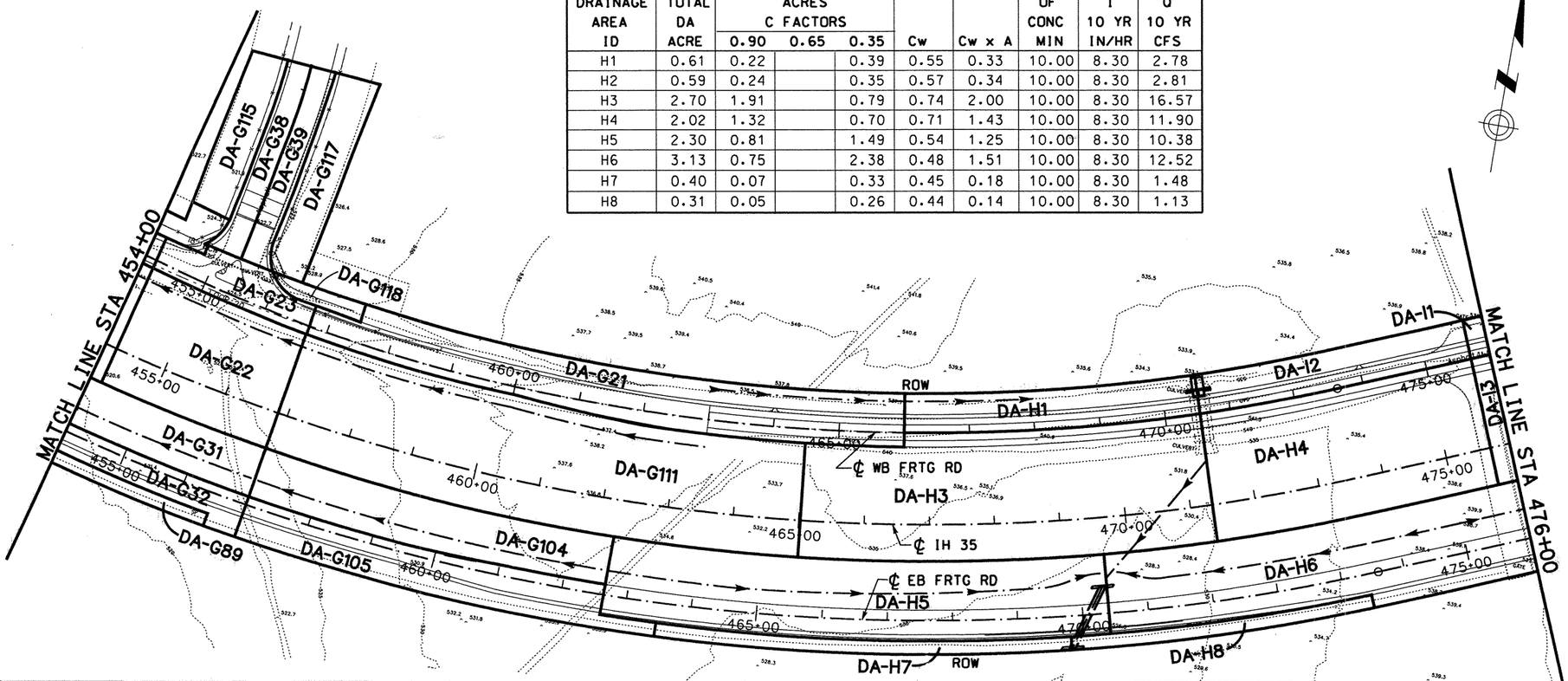

GENERAL NOTES:

1. FOR GENERAL NOTES SEE SHEET 1.

DRAINAGE AREA ID	TOTAL DA ACRE	AREAS ACRES C FACTORS 0.90	0.65	0.35	Cw	Cw x A	TIME OF CONC MIN	I 50 YR IN/HR	Q 50 YR CFS
G46	0.10	0.07		0.03	0.74	0.07	10.00	10.08	0.74
G48	0.67	0.32		0.35	0.61	0.41	10.00	10.08	4.14
G49	1.27	0.75		0.52	0.67	0.86	10.00	10.08	8.64
G50	1.38	0.34		1.04	0.49	0.67	10.00	10.08	6.76
G51	0.15	0.08		0.07	0.64	0.10	10.00	10.08	0.97
G52	1.10	0.46		0.64	0.58	0.64	10.00	10.08	6.43
G53	0.91	0.40		0.51	0.59	0.54	10.00	10.08	5.43
G54	0.14	0.11		0.03	0.78	0.11	10.00	10.08	1.10
G55	0.12			0.12	0.35	0.04	10.00	10.08	0.42
G56	0.13			0.13	0.35	0.05	10.00	10.08	0.46
G57	1.84	1.60		0.24	0.83	1.52	10.00	10.08	15.37
G58	1.33	0.63		0.70	0.61	0.81	10.00	10.08	8.19
G59	59.49		59.49		0.65	38.67	29.44	5.89	227.63
G60	0.48			0.48	0.35	0.17	10.00	10.08	1.69
G61	0.93	0.67		0.26	0.75	0.69	10.00	10.08	7.00
G62	1.12	0.56		0.56	0.63	0.70	10.00	10.08	7.06
G63	1.58	0.63		0.95	0.57	0.90	10.00	10.08	9.07
G64	0.37	0.35		0.02	0.87	0.32	10.00	10.08	3.25
G65	0.09	0.09			0.90	0.08	10.00	10.08	0.82
G66	0.48	0.12		0.36	0.49	0.23	10.00	10.08	2.36
G67	0.60	0.35		0.25	0.67	0.40	10.00	10.08	4.06
G68	0.47	0.22		0.25	0.61	0.28	10.00	10.08	2.88
G69	0.68	0.68			0.90	0.61	10.00	10.08	6.17
G70	0.92	0.29		0.63	0.52	0.48	10.00	10.08	4.85
G71	0.23			0.23	0.35	0.08	10.00	10.08	0.81
G72	0.09	0.09			0.90	0.08	10.00	10.08	0.82

DRAINAGE AREA ID	TOTAL DA ACRE	AREAS ACRES C FACTORS 0.90	0.65	0.35	Cw	Cw x A	TIME OF CONC MIN	I 50 YR IN/HR	Q 50 YR CFS
G73	0.80	0.30		0.50	0.56	0.45	10.00	10.08	4.49
G74	1.64	1.07		0.57	0.71	1.16	10.00	10.08	11.72
G75	0.80	0.39		0.41	0.62	0.49	10.00	10.08	4.99
G76	0.39	0.39			0.90	0.35	10.00	10.08	3.54
G77	0.09	0.09			0.90	0.08	10.00	10.08	0.82
G78	2.07	1.59		0.48	0.77	1.60	10.00	10.08	16.12
G79	0.73	0.34		0.39	0.61	0.44	10.00	10.08	4.46
G80	0.52	0.32		0.20	0.69	0.36	10.00	10.08	3.61
G81	1.45	0.85		0.60	0.67	0.98	10.00	10.08	9.83
G82	0.48	0.32		0.16	0.72	0.34	10.00	10.08	3.47
G84	0.60	0.27		0.33	0.60	0.36	10.00	10.08	3.61
G85	0.57	0.17		0.40	0.51	0.29	10.00	10.08	2.95
G89	0.51			0.51	0.35	0.18	10.00	10.08	1.80
G90	2.56	1.73		0.83	0.72	1.85	10.00	10.08	18.63
G91	0.86	0.62		0.24	0.75	0.64	10.00	10.08	6.47
G92	0.47	0.25		0.22	0.64	0.30	10.00	10.08	3.05
G93	3.08	3.03		0.05	0.89	2.74	10.00	10.08	27.67
G94	0.98	0.62		0.36	0.70	0.68	10.00	10.08	6.90
G95	0.35	0.35			0.90	0.32	10.00	10.08	3.18
G96	0.79	0.79			0.90	0.71	10.00	10.08	7.17
G97	0.97	0.71		0.26	0.75	0.73	10.00	10.08	7.36
G98	0.30			0.30	0.35	0.11	10.00	10.08	1.06
G99	1.43	0.50		0.93	0.54	0.78	10.00	10.08	7.82
G115	0.25			0.25	0.35	0.09	10.00	10.08	0.88
G117	0.25			0.25	0.35	0.09	10.00	10.08	0.88
G118	0.06			0.06	0.35	0.02	10.00	10.08	0.21
G120	0.58			0.58	0.35	0.20	10.00	10.08	2.05

STATE OF TEXAS
RUDY L. GOMEZ
58664
REGISTERED PROFESSIONAL ENGINEER

The seal appearing on this document was authorized by Rudy L. Gomez P.E. 58664, on September 30, 1999.

DATE	BY	REV	REVISION
9/28/99	RG	01	DA G115, G117 & G118 ADDED
9/29/99	RG	02	DA G115, G117 & G118 BOUNDARIES

© 1999 Texas Department of Transportation

Brown & Root
HOUSTON, TEXAS

LOOP 20

DRAINAGE AREA MAP
STA 455+00 TO STA 476+00

0 100 200
SCALE: 1"=200'

SHEET 3 OF 11

FED RD DIV NO	STATE PROJECT NO	SHEET NO.
6	C86-14-23	384

STATE	STATE DIST NO	COUNTY
TEXAS	22	WEBB

CONT	SECT	JOB	HIGHWAY NO
0086	14	023	LOOP 20

REF FILE(S): JO1LOX01.ROW, ROW LV ON = 1-63
JO1LOX01.BCK, BCK LV ON = 2-28,30-34,36,37,39-41-53,55,56,58-63
JO1LOX01.ALG, ALG LV ON = 1-2,5,6,10,11,13-16,18,19,29-36,38,39
JO1LOX01.EDP, EDP LV ON = 1-17,19-36,38-47
JO1LOX01.BDR, BDR LV ON = 7,16,45,47,57,60-62
REF FILE(S): JO1LOX01.DRN, DRN LV ON = 1-8,10-13,15-49,51-63

09-28-99 BAR_HO_ES05 \HCIVIL\CF0039\PHASE2 D13DRX03.DGN-14

DRAINAGE AREA ID	TOTAL DA ACRE	AREAS ACRES C FACTORS 0.90	0.65	0.35	Cw	Cw x A	TIME OF CONC MIN	I 10 YR IN/HR	Q 10 YR CFS
H1	0.61	0.22		0.39	0.55	0.33	10.00	8.30	2.78
H2	0.59	0.24		0.35	0.57	0.34	10.00	8.30	2.81
H3	2.70	1.91		0.79	0.74	2.00	10.00	8.30	16.57
H4	2.02	1.32		0.70	0.71	1.43	10.00	8.30	11.90
H5	2.30	0.81		1.49	0.54	1.25	10.00	8.30	10.38
H6	3.13	0.75		2.38	0.48	1.51	10.00	8.30	12.52
H7	0.40	0.07		0.33	0.45	0.18	10.00	8.30	1.48
H8	0.31	0.05		0.26	0.44	0.14	10.00	8.30	1.13

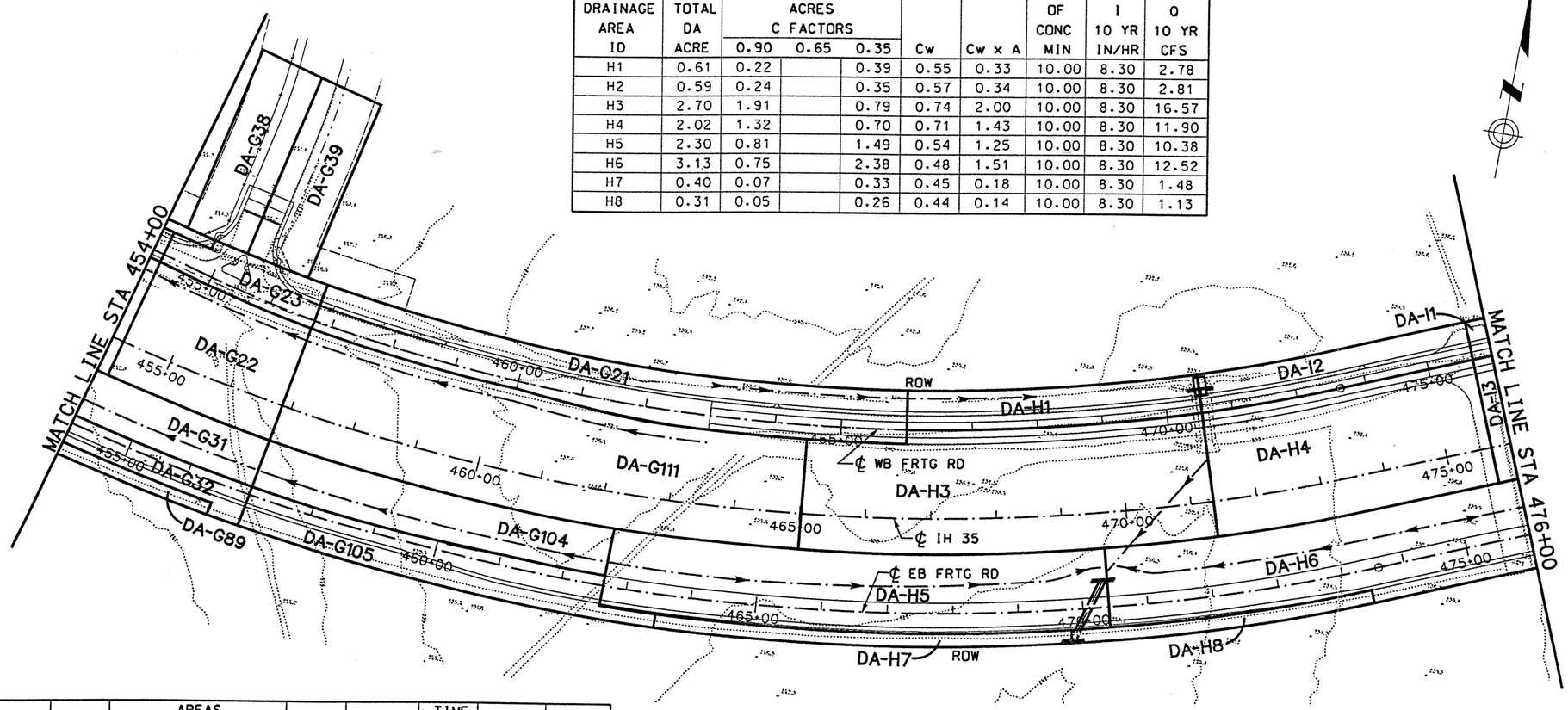

GENERAL NOTES:

1. FOR GENERAL NOTES SEE SHEET 1.

DRAINAGE AREA ID	TOTAL DA ACRE	AREAS ACRES C FACTORS 0.90	0.65	0.35	Cw	Cw x A	TIME OF CONC MIN	I 50 YR IN/HR	Q 50 YR CFS
G46	0.10	0.07		0.03	0.74	0.07	10.00	10.08	0.74
G48	0.67	0.32		0.35	0.61	0.41	10.00	10.08	4.14
G49	1.27	0.75		0.52	0.67	0.86	10.00	10.08	8.64
G50	1.38	0.34		1.04	0.49	0.67	10.00	10.08	6.76
G51	0.15	0.08		0.07	0.64	0.10	10.00	10.08	0.97
G52	1.10	0.46		0.64	0.58	0.64	10.00	10.08	6.43
G53	0.91	0.40		0.51	0.59	0.54	10.00	10.08	5.43
G54	0.14	0.11		0.03	0.78	0.11	10.00	10.08	1.10
G55	0.12			0.12	0.35	0.04	10.00	10.08	0.42
G56	0.13			0.13	0.35	0.05	10.00	10.08	0.46
G57	1.84	1.60		0.24	0.83	1.52	10.00	10.08	15.37
G58	1.33	0.63		0.70	0.61	0.81	10.00	10.08	8.19
G59	59.49		59.49		0.65	38.67	29.44	5.89	227.63
G60	0.48			0.48	0.35	0.17	10.00	10.08	1.69
G61	0.93	0.67		0.26	0.75	0.69	10.00	10.08	7.00
G62	1.12	0.56		0.56	0.63	0.70	10.00	10.08	7.06
G63	1.58	0.63		0.95	0.57	0.90	10.00	10.08	9.07
G64	0.37	0.35		0.02	0.87	0.32	10.00	10.08	3.25
G65	0.09	0.09			0.90	0.08	10.00	10.08	0.82
G66	0.48	0.12		0.36	0.49	0.23	10.00	10.08	2.36
G67	0.60	0.35		0.25	0.67	0.40	10.00	10.08	4.06
G68	0.47	0.22		0.25	0.61	0.28	10.00	10.08	2.88
G69	0.68	0.68			0.90	0.61	10.00	10.08	6.17
G70	0.92	0.29		0.63	0.52	0.48	10.00	10.08	4.85
G71	0.23			0.23	0.35	0.08	10.00	10.08	0.81
G72	0.09	0.09			0.90	0.08	10.00	10.08	0.82

DRAINAGE AREA ID	TOTAL DA ACRE	AREAS ACRES C FACTORS 0.90	0.65	0.35	Cw	Cw x A	TIME OF CONC MIN	I 50 YR IN/HR	Q 50 YR CFS
G73	0.80	0.30		0.50	0.56	0.45	10.00	10.08	4.49
G74	1.64	1.07		0.57	0.71	1.16	10.00	10.08	11.72
G75	0.80	0.39		0.41	0.62	0.49	10.00	10.08	4.99
G76	0.39	0.39			0.90	0.35	10.00	10.08	3.54
G77	0.09	0.09			0.90	0.08	10.00	10.08	0.82
G78	2.07	1.59		0.48	0.77	1.60	10.00	10.08	16.12
G79	0.73	0.34		0.39	0.61	0.44	10.00	10.08	4.46
G80	0.52	0.32		0.20	0.69	0.36	10.00	10.08	3.61
G81	1.45	0.85		0.60	0.67	0.98	10.00	10.08	9.83
G82	0.48	0.32		0.16	0.72	0.34	10.00	10.08	3.47
G84	0.60	0.27		0.33	0.60	0.36	10.00	10.08	3.61
G85	0.57	0.17		0.40	0.51	0.29	10.00	10.08	2.95
G89	0.51			0.51	0.35	0.18	10.00	10.08	1.80
G90	2.56	1.73		0.83	0.72	1.85	10.00	10.08	18.63
G91	0.86	0.62		0.24	0.75	0.64	10.00	10.08	6.47
G92	0.47	0.25		0.22	0.64	0.30	10.00	10.08	3.05
G93	3.08	3.03		0.05	0.89	2.74	10.00	10.08	27.67
G94	0.98	0.62		0.36	0.70	0.68	10.00	10.08	6.90
G95	0.35	0.35			0.90	0.32	10.00	10.08	3.18
G96	0.79	0.79			0.90	0.71	10.00	10.08	7.17
G97	0.97	0.71		0.26	0.75	0.73	10.00	10.08	7.36
G98	0.30			0.30	0.35	0.11	10.00	10.08	1.06
G99	1.43	0.50		0.93	0.54	0.78	10.00	10.08	7.82

SEE REVISION
REV. 6-25-99

STATE OF TEXAS
RUDY L. GOMEZ
58664
REGISTERED PROFESSIONAL ENGINEER

The seal appearing on this document was authorized by Rudy L. Gomez P.E. 58664, on June 3, 1999.

DATE	BY	REV	REVISION
6/03/99	RG	01	DA G114 & G115 DELETED

© 1999 Texas Department of Transportation

Brown & Root
HOUSTON, TEXAS

LOOP 20

DRAINAGE AREA MAP
STA 455+00 TO STA 476+00

0 100 200
SCALE: 1"=200'

SHEET 3 OF 11

FED RD DIV NO	STATE PROJECT NO	SHEET NO
6	C86-14-23	384

STATE	STATE DIST NO	COUNTY
TEXAS	22	WEBB

CONT	SECT	JOB	HIGHWAY NO
0086	14	023	LOOP 20

REF FILE(S): J01LOX01.ROW, ROW LV ON =
J01LOX01.FND, FND LV ON =
J01LOX01.BCK, BCK LV ON =
J01LOX01.ALG, ALG LV ON =
J01LOX01.EDP, EDP LV ON =
J01LOX01.BDR, BDR LV ON = 5,45,57,60-63

REF FILE(S): J01LOX01.DRN, DRN LV ON

D13DRX03.DGN-11 06-01-99 BAR_HO_ES05 \HCIVIL\CF0039\PHASE2

GENERAL NOTES:

1. FOR GENERAL NOTES SEE SHEET 1.

DRAINAGE AREA ID	TOTAL DA ACRE	AREAS ACRES C FACTORS 0.90	0.65	0.35	Cw	Cw x A	TIME OF CONC MIN	I 10 YR IN/HR	Q 10 YR CFS
M1	0.48	0.36		0.12	0.76	0.37	10.00	8.30	3.04
M2	0.42	0.33		0.09	0.78	0.33	10.00	8.30	2.73
M5	0.65	0.50		0.15	0.77	0.50	10.00	8.30	4.17
M6	0.42	0.33		0.09	0.78	0.33	10.00	8.30	2.73
M7	0.88	0.59		0.29	0.72	0.63	10.00	8.30	5.25
M8	0.58	0.50		0.08	0.82	0.48	10.00	8.30	3.97
M9	1.10	0.69		0.41	0.70	0.76	10.00	8.30	6.35
M10	1.17	0.82		0.35	0.74	0.86	10.00	8.30	7.14
M12	0.14	0.14			0.90	0.13	10.00	8.30	1.05
M13	0.50	0.39		0.11	0.78	0.39	10.00	8.30	3.23
M15	0.07	0.07			0.90	0.06	10.00	8.30	0.52
M16	0.07	0.07			0.90	0.06	10.00	8.30	0.52
M17	1.15	0.89		0.26	0.78	0.89	10.00	8.30	7.40
M18	0.19	0.12		0.07	0.70	0.13	10.00	8.30	1.10

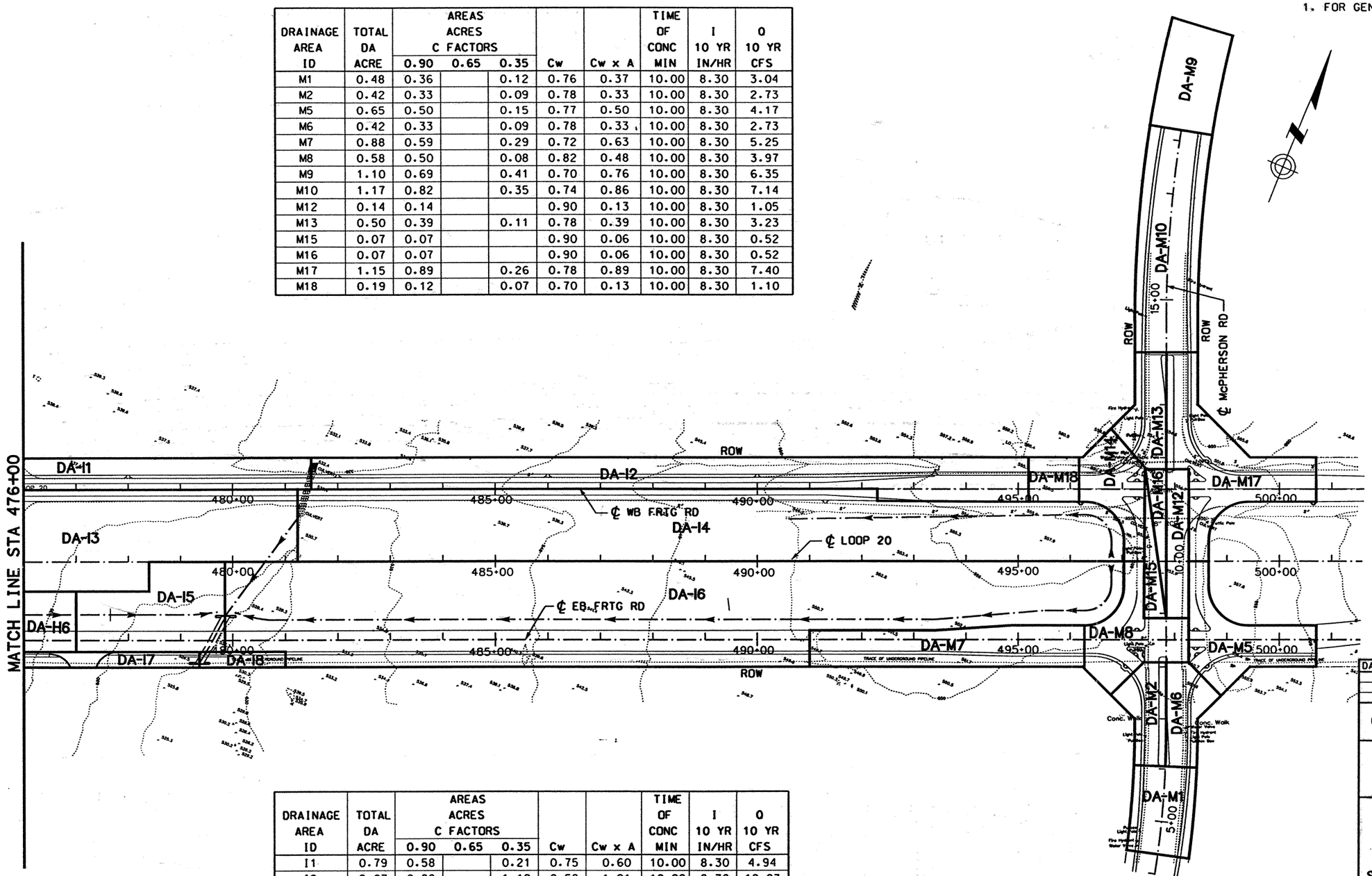

DRAINAGE AREA ID	TOTAL DA ACRE	AREAS ACRES C FACTORS 0.90	0.65	0.35	Cw	Cw x A	TIME OF CONC MIN	I 10 YR IN/HR	Q 10 YR CFS
I1	0.79	0.58		0.21	0.75	0.60	10.00	8.30	4.94
I2	2.07	0.88		1.19	0.58	1.21	10.00	8.30	10.03
I3	2.13	1.11		1.02	0.64	1.36	10.00	8.30	11.26
I4	4.78	2.21		2.57	0.60	2.89	10.00	8.30	23.98
I5	0.93	0.43		0.50	0.60	0.56	10.00	8.30	4.67
I6	6.56	2.72		3.84	0.58	3.79	10.00	8.30	31.48
I7	0.25	0.04		0.21	0.44	0.11	10.00	8.30	0.91
I8	0.13	0.02		0.11	0.43	0.06	10.00	8.30	0.47
I9	0.56	0.36		0.20	0.70	0.39	10.00	8.30	3.27

STATE OF TEXAS
RUDY L. GOMEZ
58664
REGISTERED PROFESSIONAL ENGINEER

The seal appearing on this document was authorized by Rudy L. Gomez P.E. 58664, on April 2, 1999.

DATE	BY	REV	REVISION

© 1999 Texas Department of Transportation

Brown & Root
HOUSTON, TEXAS

LOOP 20

DRAINAGE AREA MAP
STA 476+00 TO STA 495+00

0 100 200
SCALE: 1"=200'

SHEET 4 OF 11

FED RD DIV NO	STATE PROJECT NO	SHEET NO
6	C86-14-23	305

STATE	STATE DIST NO	COUNTY
TEXAS	22	WEBB

CONT	SECT	JOB	HIGHWAY NO
0086	14	023	LOOP 20

REF FILE(S): J01LOX01.DRN, DRN
LV ON = J01LOX01.ROW, ROW
LV ON = J01LOX01.FND, FND
LV ON = J01LOX01.BCK, BCK
LV ON = J01LOX01.ALG, ALG
LV ON = J01LOX01.EOP, EOP
LV ON = J01LOX01.BDR, BDR
REF FILE(S): J01LOX01.DRN, DRN
LV ON = 5,45,57,60-63

D13DRX04.DGN-08 03-15-99 BAR_HO_ES05 \HCIVIL\CF0039\PHASE2

GENERAL NOTES:

1. FOR GENERAL NOTES SEE SHEET 1.

DRAINAGE AREA ID	TOTAL DA ACRE	AREAS ACRES C FACTORS 0.90	0.65	0.35	Cw	Cw x A	TIME OF CONC MIN	I 10 YR IN/HR	Q 10 YR CFS
J1	1.48			1.48	0.35	0.52	10.00	8.30	4.30
J2	7.29	2.39		4.90	0.53	3.87	10.00	8.30	32.09

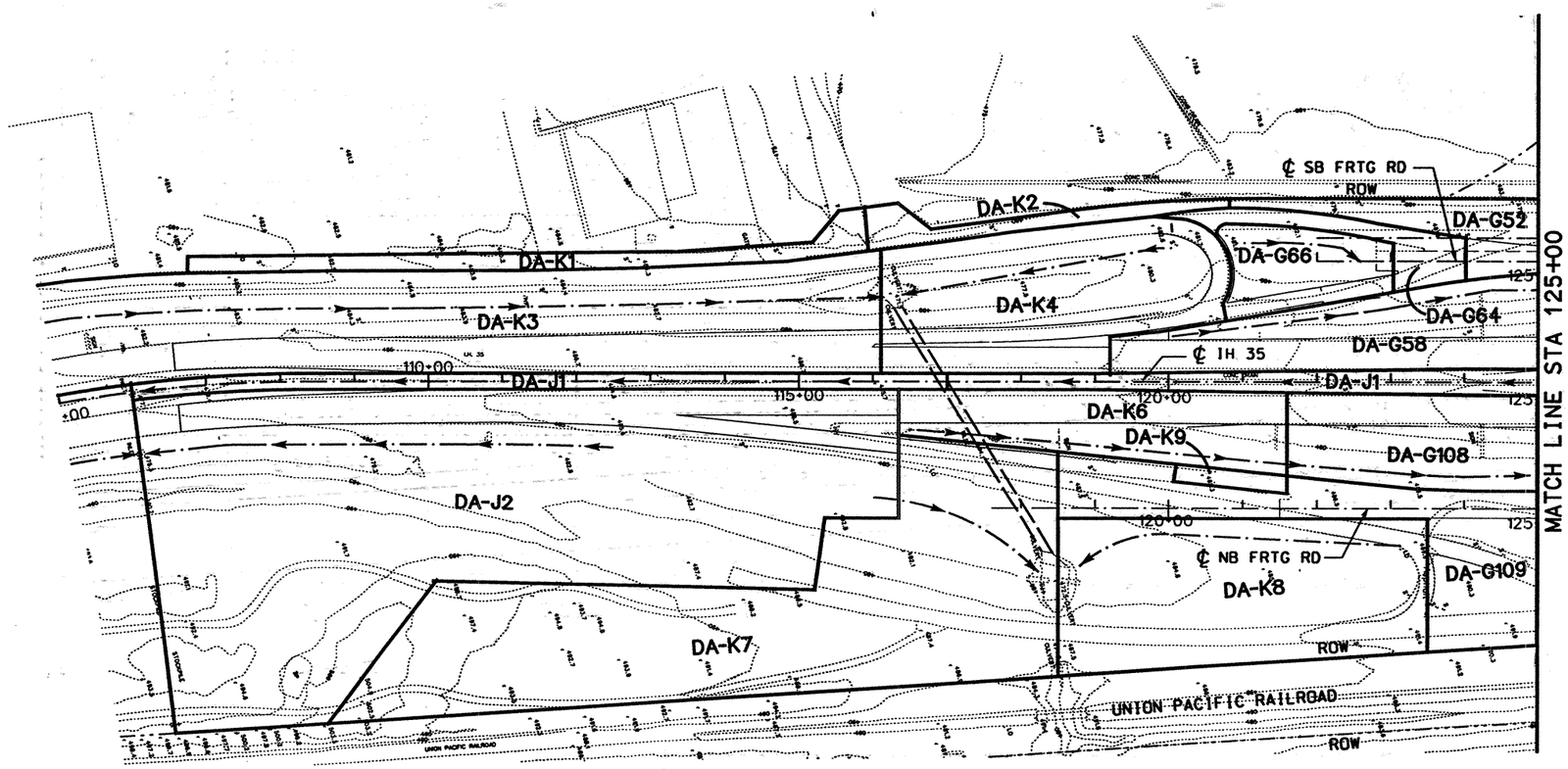

DRAINAGE AREA ID	TOTAL DA ACRE	AREAS ACRES C FACTORS 0.90	0.65	0.35	Cw	Cw x A	TIME OF CONC MIN	I 10 YR IN/HR	Q 10 YR CFS
K1	0.47			0.47	0.35	0.16	10.00	8.30	1.37
K2	0.41			0.41	0.35	0.14	10.00	8.30	1.19
K3	3.56	1.73		1.83	0.62	2.20	10.00	8.30	18.24
K4	1.88	0.86		1.02	0.60	1.13	10.00	8.30	9.39
K6	1.09	0.73		0.36	0.72	0.78	10.00	8.30	6.50
K7	5.28	0.85		4.43	0.44	2.32	10.00	8.30	19.22
K8	2.28	0.44		1.84	0.46	1.04	10.00	8.30	8.63
K9	0.09	0.09			0.90	0.08	10.00	8.30	0.67

DRAINAGE AREA ID	TOTAL DA ACRE	AREAS ACRES C FACTORS 0.90	0.65	0.35	Cw	Cw x A	TIME OF CONC MIN	I 10 YR IN/HR	Q 10 YR CFS
G100	0.12			0.12	0.35	0.04	10.00	10.08	0.42
G101	0.12			0.12	0.35	0.04	10.00	10.08	0.42
G104	1.31	0.54		0.77	0.58	0.76	10.00	10.08	7.62
G105	1.19	0.65		0.54	0.65	0.77	10.00	10.08	7.80
G106	0.58	0.35		0.23	0.68	0.40	10.00	10.08	3.99
G107	0.6	0.36		0.24	0.68	0.41	10.00	10.08	4.11
G108	1.00	0.36		0.64	0.55	0.55	10.00	10.08	5.53
G109	1.31	0.82		0.49	0.69	0.91	10.00	10.08	9.17
G110	0.43	0.23		0.20	0.64	0.28	10.00	10.08	2.79
G111	3.43	2.25		1.18	0.71	2.44	10.00	10.08	24.58
G112	0.55	0.35		0.20	0.70	0.38	10.00	10.08	3.88

STATE OF TEXAS
RUDY L. GOMEZ
58664
REGISTERED PROFESSIONAL ENGINEER

The seal appearing on this document was authorized by Rudy L. Gomez P.E. 58664, on April 2, 1999.

DATE	BY	REV	REVISION

© 1999 Texas Department of Transportation

Brown & Root
HOUSTON, TEXAS

IH 35

DRAINAGE AREA MAP
STA 105+00 TO STA 125+00

0 100 200
SCALE: 1"=200'

SHEET 5 OF 11

FED RD DIV NO	STATE PROJECT NO	SHEET NO
6	NH-99(462)	3B6

STATE	STATE DIST NO	COUNTY
TEXAS	22	WEBB

CONT	SECT	JOB	HIGHWAY NO
0018	06	131	IH 35

REF FILE(S): J01LDX01.ROW, J01LDX01.FND, J01LDX01.BCK, J01LDX01.ALG, J01LDX01.EOP, J01LDX01.BDR, J01LDX01.DRN, LV ON = 5,45,57,60-63
LV ON = LV ON = LV ON = LV ON = LV ON = LV ON = LV ON =

D13DRX07.DGN-08 03-15-99 BAR_HO_ES05 \HCIVIL\CF0039\PHASE2

GENERAL NOTES:

1. FOR GENERAL NOTES SEE SHEET 1.

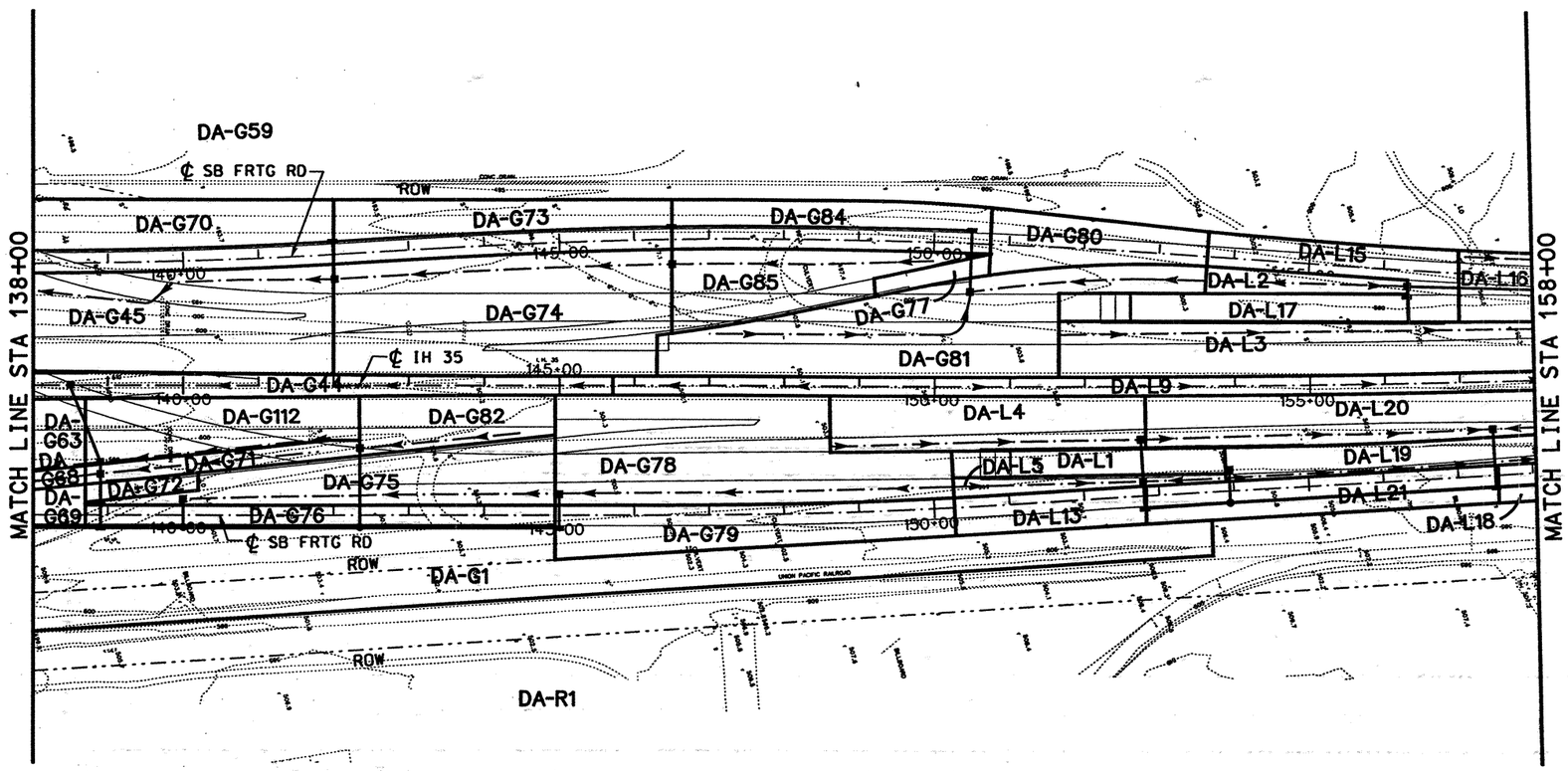

DRAINAGE AREA ID	TOTAL DA ACRE	AREAS ACRES C FACTORS 0.90	0.65	0.35	Cw	Cw x A	TIME OF CONC MIN	I 10 YR IN/HR	Q 10 YR CFS
L1	0.27								
L2	0.16			0.16	0.35	0.06	10.00	8.30	0.46
L3	1.60	1.13		0.47	0.74	1.18	10.00	8.30	9.81
L4	0.72	0.51		0.21	0.74	0.53	10.00	8.30	4.42
L5	0.20	0.04		0.16					
L6	1.83	1.32		0.51	0.75	1.37	10.00	8.30	11.34
L7	3.08	1.85		1.23	0.68	2.10	10.00	8.30	17.40
L9	0.88			0.88	0.35	0.31	10.00	8.30	2.56
L10	0.89			0.89	0.35	0.31	10.00	8.30	2.59
L11	3.42	2.36		1.06	0.73	2.50	10.00	8.30	20.71
L13	0.28	0.16		0.12	0.66	0.19	10.00	8.30	1.54
L14	0.98	0.58		0.40	0.68	0.66	10.00	8.30	5.50
L15	0.33	0.20		0.13	0.68	0.23	10.00	8.30	1.87
L16	1.84	1.30		0.54	0.74	1.36	10.00	8.30	11.28
L17	0.36	0.36			0.90	0.32	10.00	8.30	2.69
L18	0.18	0.44		0.25	2.69	0.48	10.00	8.30	4.01
L19	0.77	0.77			0.90	0.69	10.00	8.30	5.75
L20	0.98	0.68		0.30	0.73	0.72	10.00	8.30	5.95
L21	0.51	0.29		0.22	0.66	0.34	10.00	8.30	2.81

STATE OF TEXAS
RUDY L. GOMEZ
58664
REGISTERED PROFESSIONAL ENGINEER

The seal appearing on this document was authorized by Rudy L. Gomez P.E. 58664, on April 2, 1999.

DATE	BY	REV	REVISION

© 1999 Texas Department of Transportation

Brown & Root
HOUSTON, TEXAS

IH 35

DRAINAGE AREA MAP
STA 138+00 TO STA 158+00

0 100 200
SCALE: 1"=200'

SHEET 6 OF 11

FED RD DIV NO	STATE PROJECT NO	SHEET NO
6	NH-99(462)	387

STATE	STATE DIST NO	COUNTY
TEXAS	22	WEBB

CONT	SECT	JOB	HIGHWAY NO
0018	06	131	IH 35

REF FILE(S): J01LOX01.ROW, ROW LV ON =
J01LOX01.FND, FND LV ON =
J01LOX01.BCK, BCK LV ON =
J01LOX01.ALG, ALG LV ON =
J01LOX01.EOP, EOP LV ON =
REF FILE(S): J01LOX01.BDR, BDR LV ON = 5,45,57,60-63
REF FILE(S): J01LOX01.DRN, DRN LV ON =

D13DRX05.DGN-06 03-15-99 BAR_HO_ES05 \HCIVIL\CF0039\PHASE2

GENERAL NOTES:

1. FOR GENERAL NOTES SEE SHEET 1.

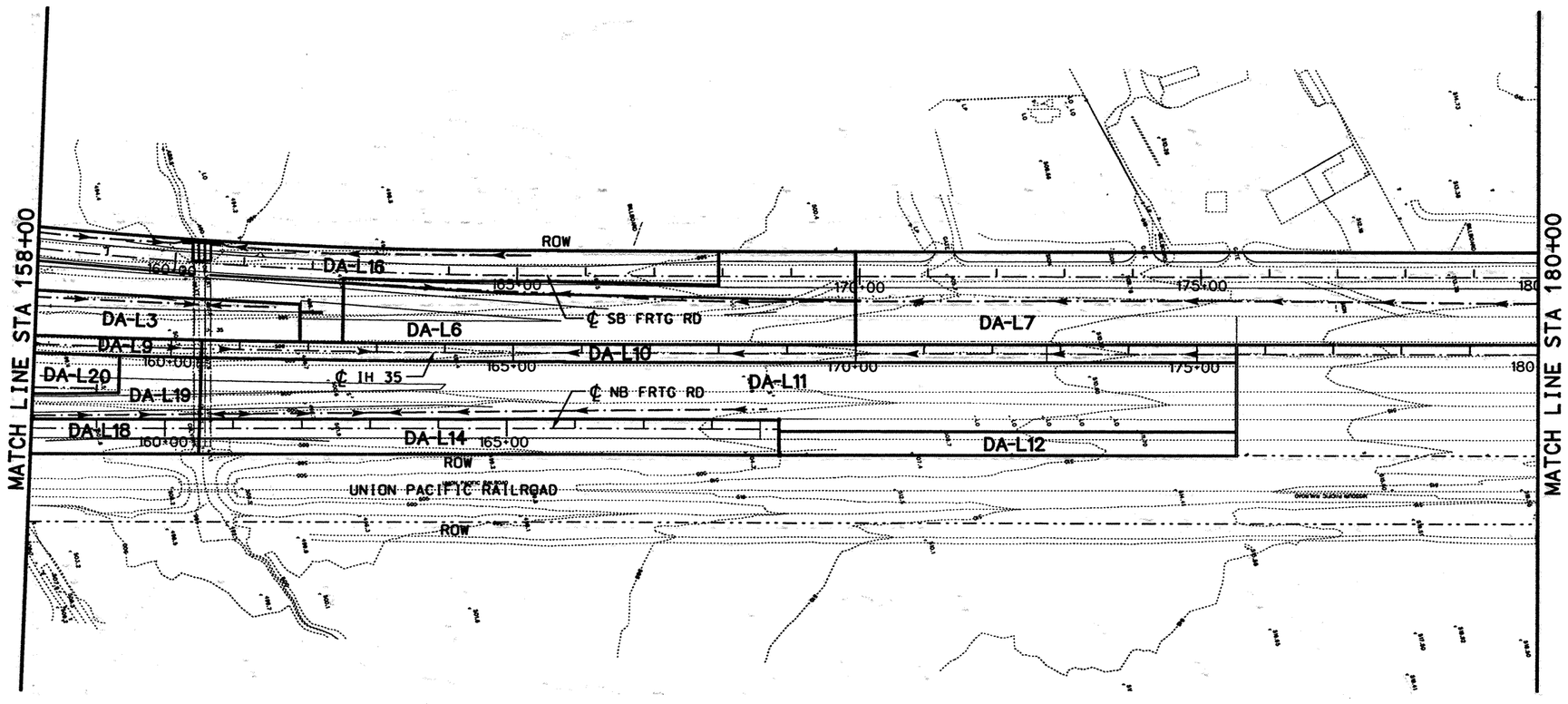

STATE OF TEXAS
RUDY L. GOMEZ
58664
REGISTERED PROFESSIONAL ENGINEER

The seal appearing on this document was authorized by Rudy L. Gomez P.E. 58664, on April 2, 1999.

DATE	BY	REV	REVISION

© 1999 Texas Department of Transportation

Brown & Root
HOUSTON, TEXAS

IH 35

DRAINAGE AREA MAP
STA 158+00 TO STA 180+00

0 100 200
SCALE: 1"=200'

SHEET 7 OF 11

FED RD DIV NO	STATE PROJECT NO	SHEET NO
6	NH-99(462)	7

STATE	STATE DIST NO	COUNTY
TEXAS	22	WEBB

CONT	SECT	JOB	HIGHWAY NO
0018	06	131	IH 35

REF FILE(S): J01LOX01.ROW, ROW LV ON =
J01LOX01.FND, FND LV ON =
J01LOX01.BCK, BCK LV ON =
J01LOX01.ALG, ALG LV ON =
J01LOX01.EOP, EOP LV ON =
J01LOX01.BDR, BDR LV ON = 5,45,57,60-63

REF FILE(S): J01LOX01.DRN, DRN LV ON =

D13DRX06.DGN-09 03-15-99 BAR_HO_ES05 \HCIVIL\CF0039\PHASE2

GENERAL NOTES:

1. FOR GENERAL NOTES SEE SHEET 1.

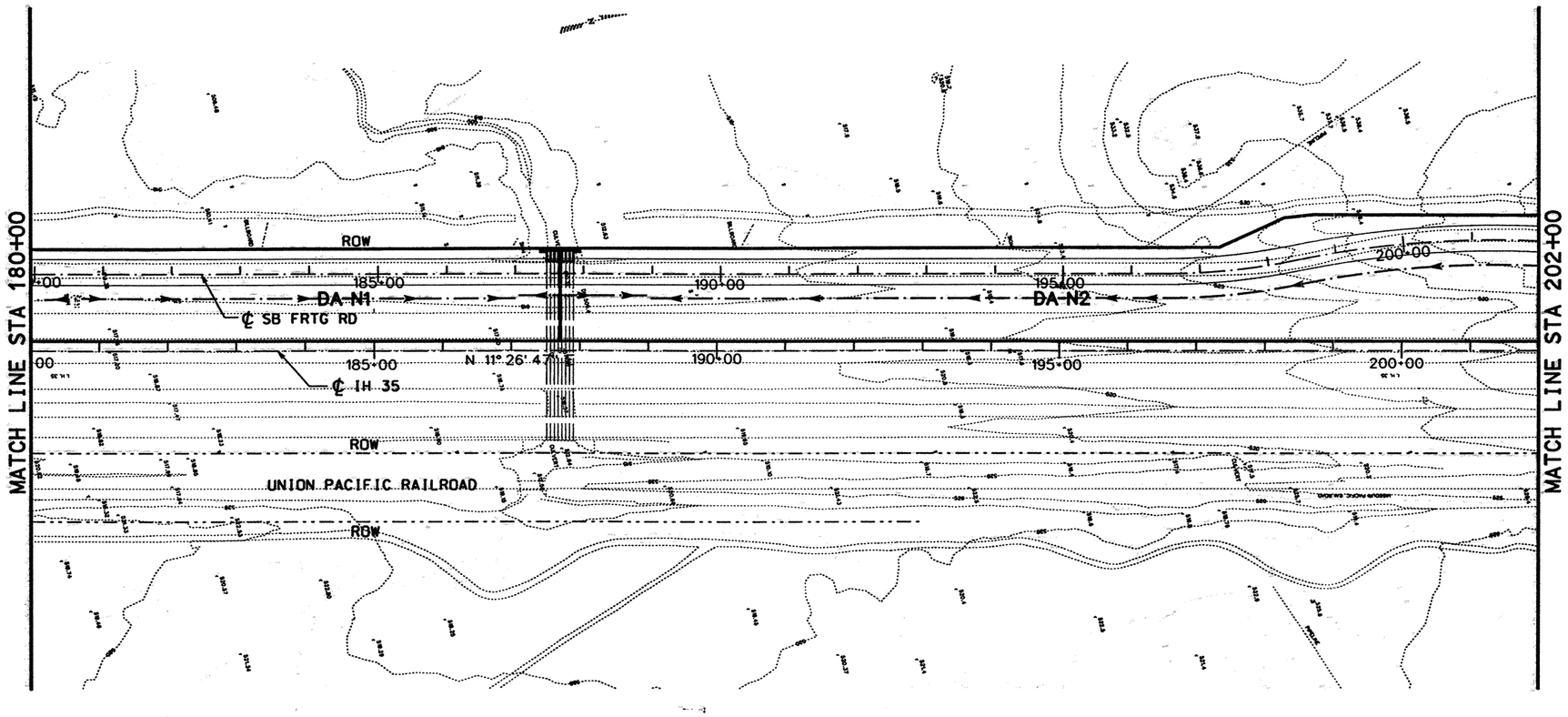

DRAINAGE AREA ID	TOTAL DA ACRE	AREAS ACRES C FACTORS 0.90	0.65	0.35	Cw	Cw x A	TIME OF CONC MIN	I 10 YR IN/HR	Q 10 YR CFS
N1	2.28	1.33		0.95	0.67	1.53	10.00	8.30	12.70
N2	5.76	2.88		2.88	0.63	3.60	10.00	8.30	29.88
N3	2.43	1.39		1.04	0.66	1.62	10.00	8.30	13.41
N4	4.07	2.03		2.04	0.62	2.54	10.00	8.30	21.09
N5	1.66	0.83		0.83	0.63	1.04	10.00	8.30	8.61
N6	4.33	2.83		1.50	0.71	3.07	10.00	8.30	25.50
N7	1.9	0.63		1.27	0.53	1.01	10.00	8.30	8.40

STATE OF TEXAS
RUDY L. GOMEZ
58664
REGISTERED PROFESSIONAL ENGINEER

The seal appearing on this document was authorized by Rudy L. Gomez P.E. 58664, on April 2, 1999.

DATE	BY	REV	REVISION

©1999 Texas Department of Transportation

Brown & Root
HOUSTON, TEXAS

IH 35

DRAINAGE AREA MAP
STA 180+00 TO STA 202+00

0 100 200
SCALE: 1"=200'

SHEET 8 OF 11

FED RD DIV NO	STATE PROJECT NO	SHEET NO
6	NH-99(462)	389

STATE	STATE DIST NO	COUNTY
TEXAS	22	WEBB

CONT	SECT	JOB	HIGHWAY NO
0018	06	131	IH 35

REF FILE(S): J01LOX01.ROW, ROW LV ON =
J01LOX01.FND, FND LV ON =
J01LOX01.BCK, BCK LV ON =
J01LOX01.ALG, ALG LV ON =
J01LOX01.EOP, EOP LV ON = 5,45,57,60-63
J01LOX01.BDR, BDR LV ON =
REF FILE(S): J01LOX01.DRN, DRN LV ON =

D13DRX08.DGN-08 03-15-99 BAR_HO_ES05 \HCIVIL\CF0039\PHASE2

GENERAL NOTES:

1. FOR GENERAL NOTES SEE SHEET 1.

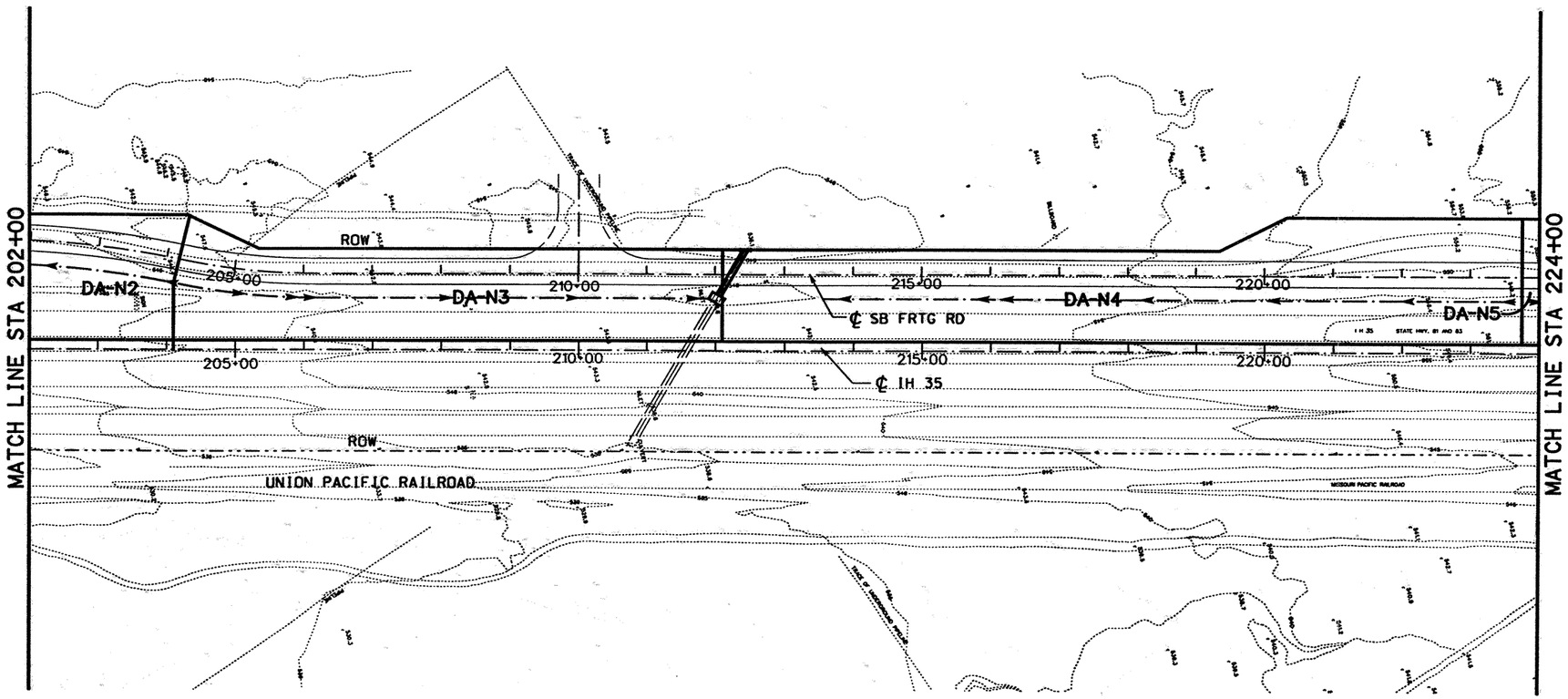

STATE OF TEXAS
RUDY L. GOMEZ
58664
REGISTERED PROFESSIONAL ENGINEER

The seal appearing on this document was authorized by Rudy L. Gomez P.E. 58664, on April 2, 1999.

DATE	BY	REV	REVISION

© 1999 Texas Department of Transportation

Brown & Root
HOUSTON, TEXAS

IH 35

DRAINAGE AREA MAP
STA 202+00 TO STA 224+00

0 100 200
SCALE: 1"=200'

SHEET 9 OF 11

FED RD DIV NO	STATE PROJECT NO		SHEET NO
6	NH-99(462)		390
STATE	STATE DIST NO		COUNTY
TEXAS	22		WEBB
CONT	SECT	JOB	HIGHWAY NO
0018	06	131	IH 35

D13DRXO9.DGN-08 03-15-99 BAR_HO_ES05 \HCIVIL\CF0039\PHASE2

REF FILE(S): J01LOXO1.ROW, ROW LV ON =
J01LOXO1.FND, FND LV ON =
J01LOXO1.BCK, BCK LV ON =
J01LOXO1.ALG, ALG LV ON =
J01LOXO1.EOP, EOP LV ON =
J01LOXO1.BDR, BDR LV ON = 5,45,57,60-63

REF FILE(S): J01LOXO1.DRN, DRN LV ON =
LV ON =
LV ON =
LV ON =
LV ON =
LV ON =

GENERAL NOTES:

1. FOR GENERAL NOTES SEE SHEET 1.

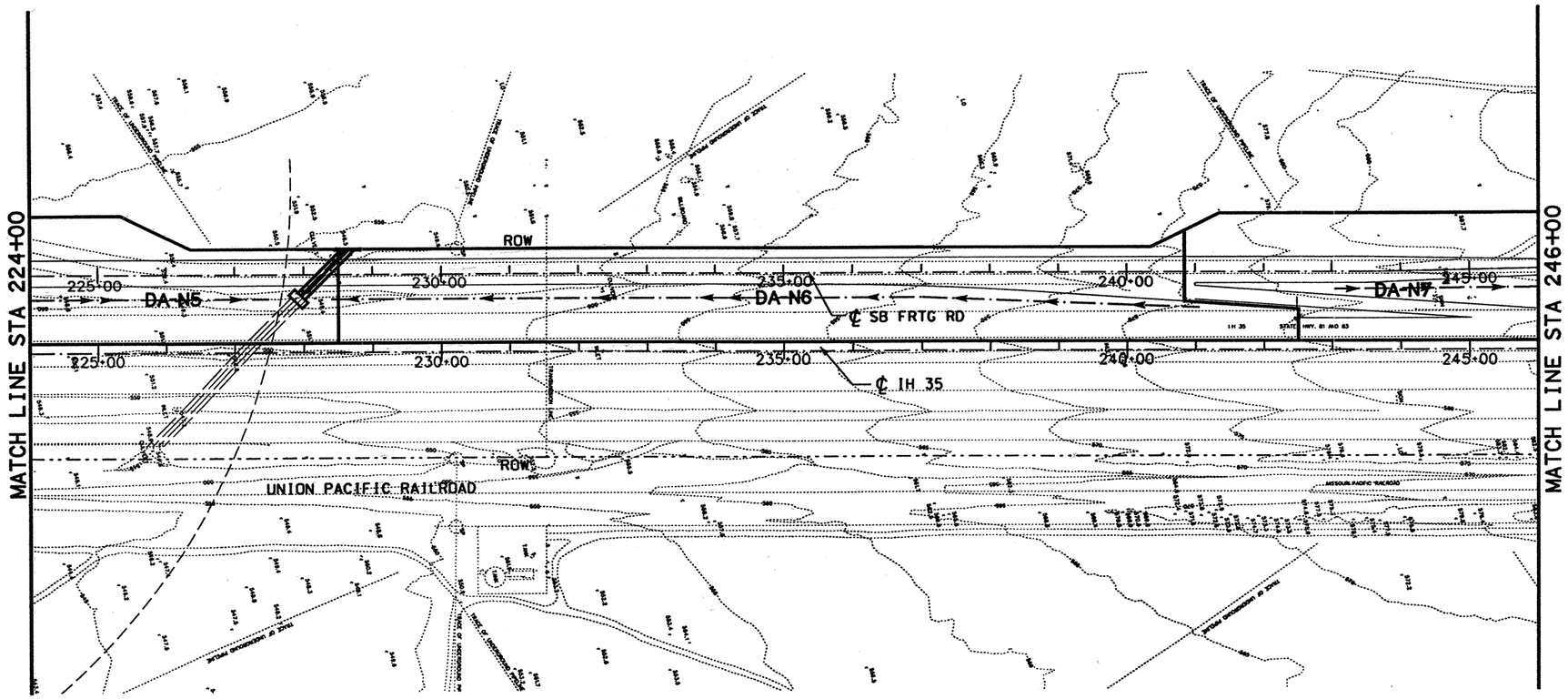

STATE OF TEXAS
RUDY L. GOMEZ
58664
REGISTERED PROFESSIONAL ENGINEER

The seal appearing on this document was authorized by Rudy L. Gomez P.E. 58664, on April 2, 1999.

DATE	BY	REV	REVISION

© 1999 Texas Department of Transportation

Brown & Root
HOUSTON, TEXAS

IH 35

DRAINAGE AREA MAP
STA 224+00 TO STA 246+00

0 100 200
SCALE: 1"=200'

SHEET 10 OF 11

FED RD DIV NO	STATE PROJECT NO		SHEET NO
6	NH-99(462)		391
STATE	STATE DIST NO		COUNTY
TEXAS	22		WEBB
CONT	SECT	JOB	HIGHWAY NO
0018	06	131	IH 35

REF FILE(S): J01LOX01.ROW, ROW LV ON =
J01LOX01.FND, FND LV ON =
J01LOX01.BCK, BCK LV ON =
J01LOX01.ALG, ALG LV ON =
J01LOX01.EOP, EOP LV ON =
J01LOX01.BDR, BDR LV ON = 5,45,57,60-63

REF FILE(S): J01LOX01.DRN, DRN LV ON =
LV ON =
LV ON =
LV ON =
LV ON =
LV ON =

D13DRX10.DGN-08 03-15-99 BAR_HO_ES05 \HCIVIL\CF0039\PHASE2

GENERAL NOTES:

1. FOR GENERAL NOTES SEE SHEET 1.

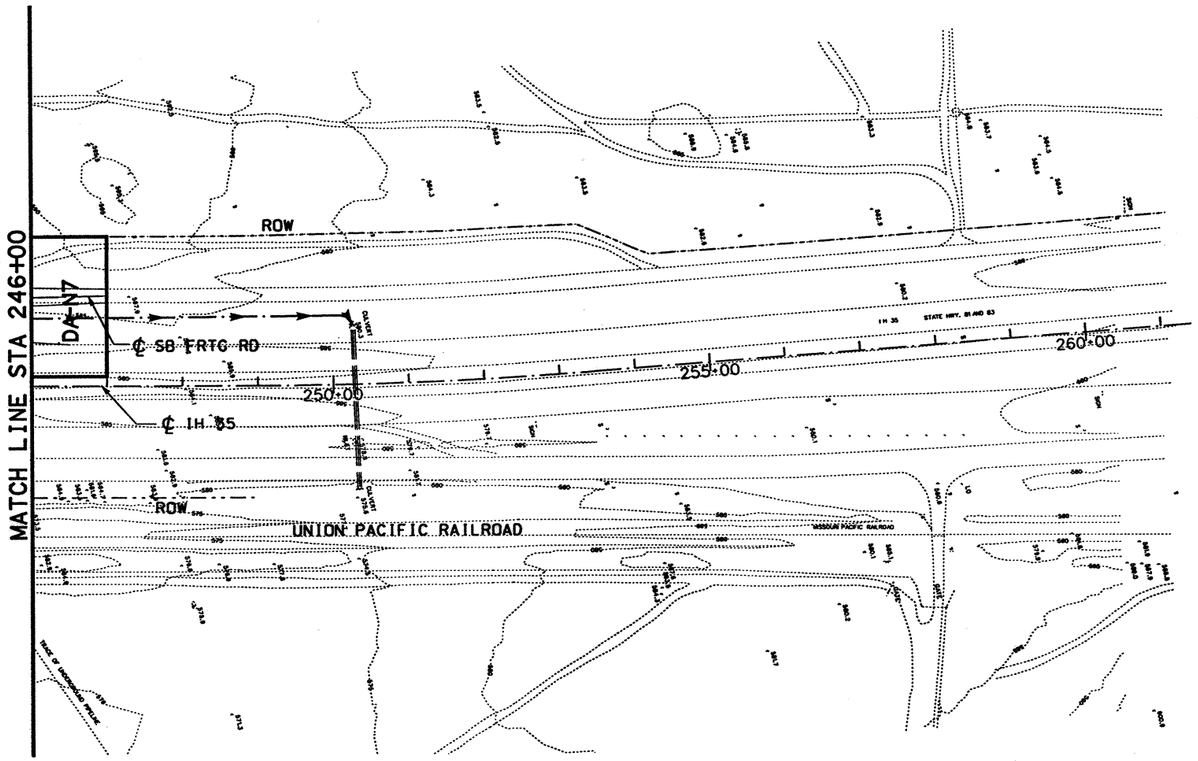

REF FILE(S): J01LOX01.ROW, ROW LV ON =
J01LOX01.FND, FND LV ON =
J01LOX01.BCK, BCK LV ON =
J01LOX01.ALG, ALG LV ON =
J01LOX01.EOP, EOP LV ON = 5,45,57,60-63
J01LOX01.BDR, BDR LV ON =

REF FILE(S): J01LOX01.DRN, DRN LV ON =
LV ON =
LV ON =
LV ON =
LV ON =
LV ON =

STATE OF TEXAS
RUDY L. GOMEZ
58664
REGISTERED PROFESSIONAL ENGINEER

The seal appearing on this document was authorized by Rudy L. Gomez P.E. 58664, on April 2, 1999.

DATE	BY	REV	REVISION

© 1999 Texas Department of Transportation

Brown & Root
HOUSTON, TEXAS

IH 35

DRAINAGE AREA MAP
STA 224+00 TO
STA 261+48.09

0 100 200
SCALE: 1"=200'

SHEET 11 OF 11

FED RD DIV NO	STATE PROJECT NO	SHEET NO
6	NH-99(462)	372

STATE	STATE DIST NO	COUNTY
TEXAS	22	WEBB

CONT	SECT	JOB	HIGHWAY NO
0018	06	131	IH 35

D13DRX11.DGN-07 03-15-99 BAR_HO_ES05 \HCIVIL\CF0039\PHASE2

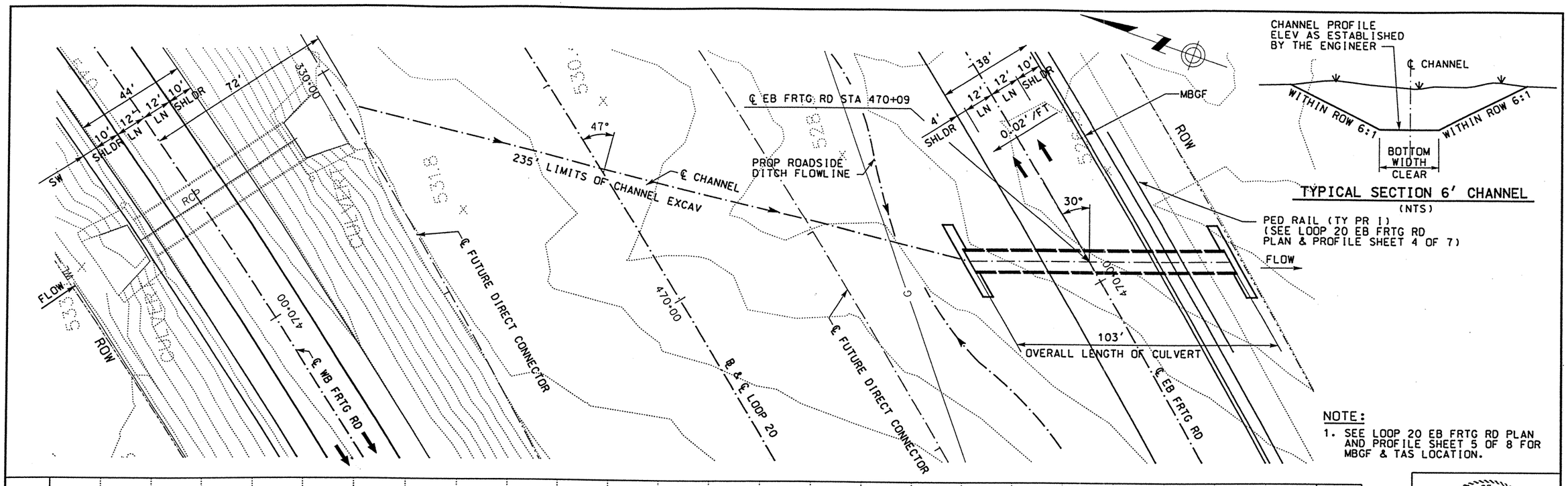

TYPICAL SECTION 6' CHANNEL
(NTS)

NOTE:

1. SEE LOOP 20 EB FRTG RD PLAN AND PROFILE SHEET 5 OF 8 FOR MBGF & TAS LOCATION.

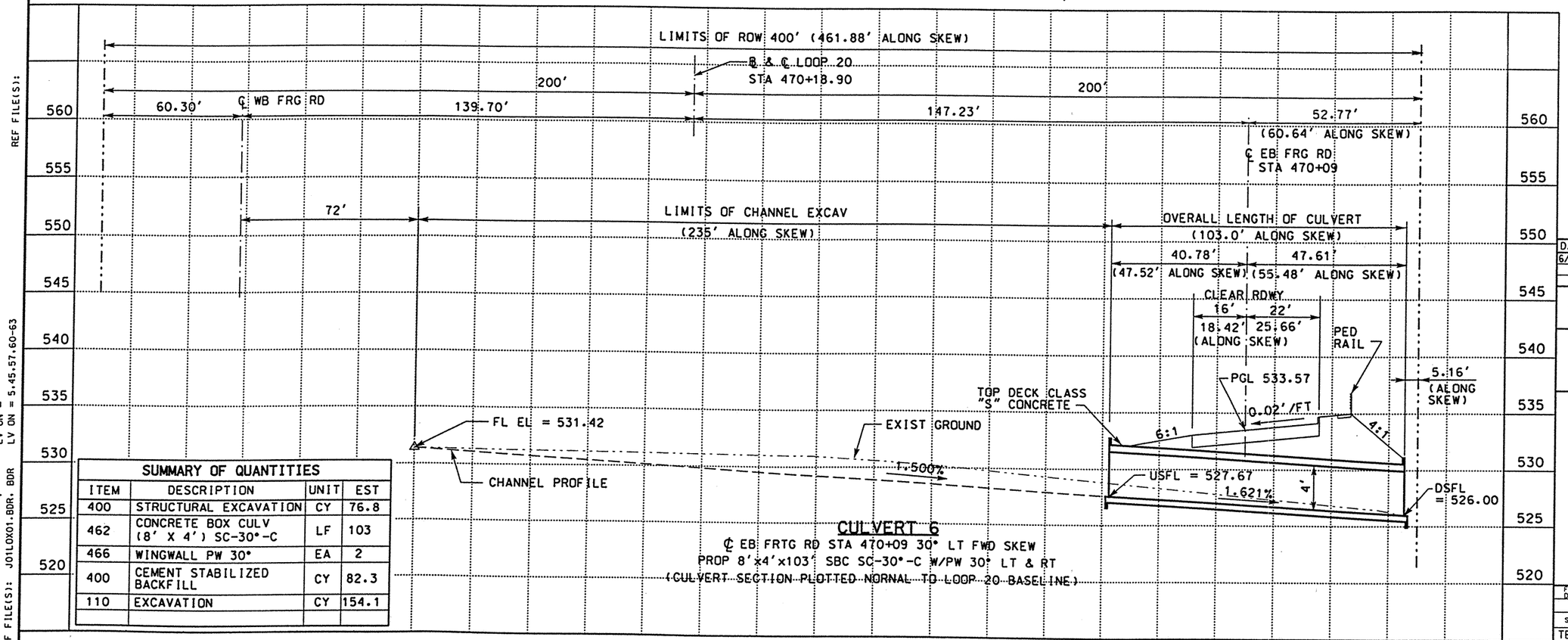

CULVERT 6

℄ EB FRTG RD STA 470+09 30° LT FWD SKEW
PROP 8'x4'x103' SBC SC-30°-C W/PW 30° LT & RT
(CULVERT SECTION PLOTTED NORMAL TO LOOP 20 BASELINE)

SUMMARY OF QUANTITIES

ITEM	DESCRIPTION	UNIT	EST
400	STRUCTURAL EXCAVATION	CY	76.8
462	CONCRETE BOX CULV (8' X 4') SC-30°-C	LF	103
466	WINGWALL PW 30°	EA	2
400	CEMENT STABILIZED BACKFILL	CY	82.3
110	EXCAVATION	CY	154.1

REV. 6-25-99

STATE OF TEXAS
RUDY L. GOMEZ
58664
REGISTERED PROFESSIONAL ENGINEER

The seal appearing on this document was authorized by Rudy L. Gomez P.E. 58664, on June 3, 1999.

DATE	BY	REV	REVISION
6/3/99	RG	01	PLAN AND PROFILE

© 1999 Texas Department of Transportation

Brown & Root
HOUSTON, TEXAS

LOOP 20

CULVERT #6
CULVERT LAYOUT

0 20 40
SCALE: 1" = 40' HORZ
1" = 10' VERT

SHEET 1 OF 1

FED RD DIV NO	STATE PROJECT NO	SHEET NO
6	C86-14-23	393

STATE	STATE DIST NO	COUNTY
TEXAS	22	WEBB

CONT	SECT	JOB	HIGHWAY NO
0086	14	023	LOOP 20

REF FILE(S): J01LOX01.BDR, BDR

LV ON = 5.45.57.60-63

REF FILE(S):

06-07-99 BAR_HO_ES05 \HCIVIL\CF0039\PHASE2

D13CSX02.DGN-12

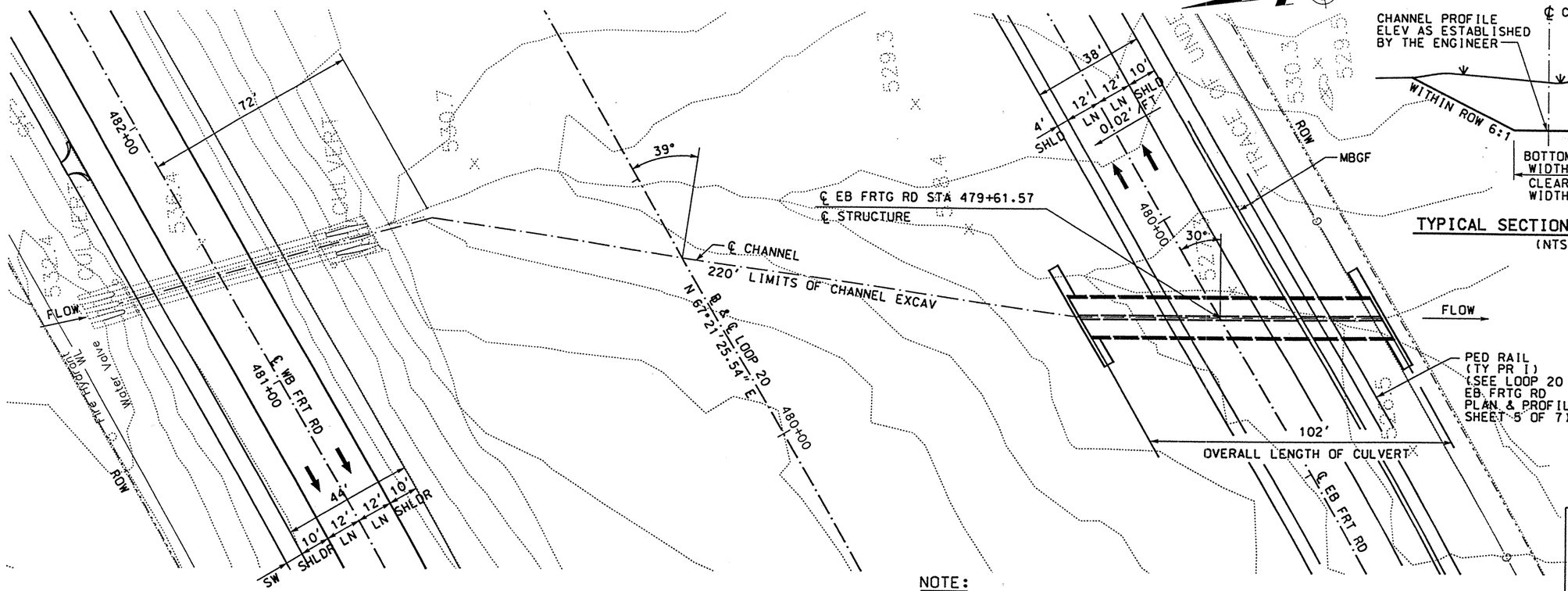

TYPICAL SECTION 12' CHANNEL
(NTS)

NOTE:

1. SEE LOOP 20 EB FRTG RD PLAN AND PROFILE SHEET 6 OF 8 FOR MBGF & TAS LOCATION.

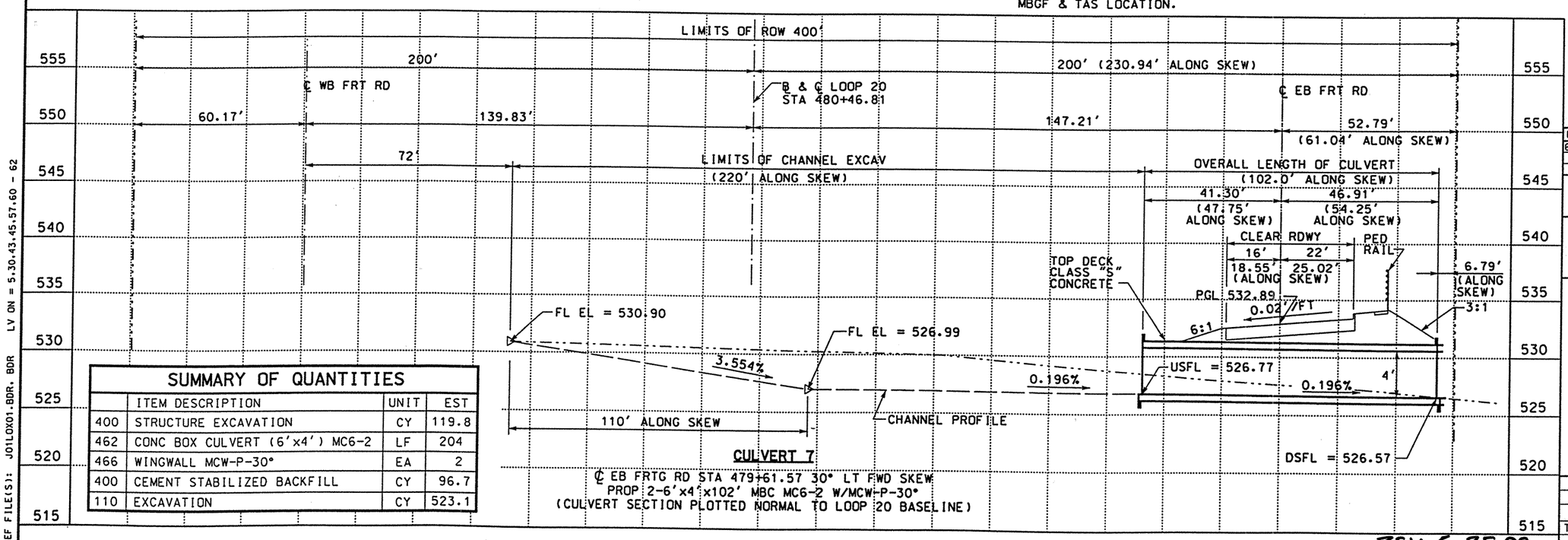

SUMMARY OF QUANTITIES

	ITEM DESCRIPTION	UNIT	EST
400	STRUCTURE EXCAVATION	CY	119.8
462	CONC BOX CULVERT (6'x4') MC6-2	LF	204
466	WINGWALL MCW-P-30°	EA	2
400	CEMENT STABILIZED BACKFILL	CY	96.7
110	EXCAVATION	CY	523.1

STATE OF TEXAS
RUDY L. GOMEZ
58664
REGISTERED PROFESSIONAL ENGINEER

The seal appearing on this document was authorized by Rudy L. Gomez P.E. 58664, on June 3, 1999.

DATE	BY	REV	REVISION
6/3/99	RG	01	PROFILE

© 1999 Texas Department of Transportation

Brown & Root
HOUSTON, TEXAS

LOOP 20

CULVERT #7
CULVERT LAYOUT

0 20 40
SCALE: 1" = 40' HORZ
1" = 10' VERT

SHEET 1 OF 1

FED RD DIV NO	STATE PROJECT NO	SHEET NO
6	C86-14-23	394

STATE	STATE DIST NO	COUNTY
TEXAS	22	WEBB

CONT	SECT	JOB	HIGHWAY NO
0086	14	023	LOOP 20

REV. 6-25-99

REF FILE(S): J01LOX01.BDR, BDR LV ON = 5,30,43,45,57,60 - 62

06-07-99 BAR_HO_ES05 \HCIVIL\CF0039\PHASE2 D13CSX01.DGN-10

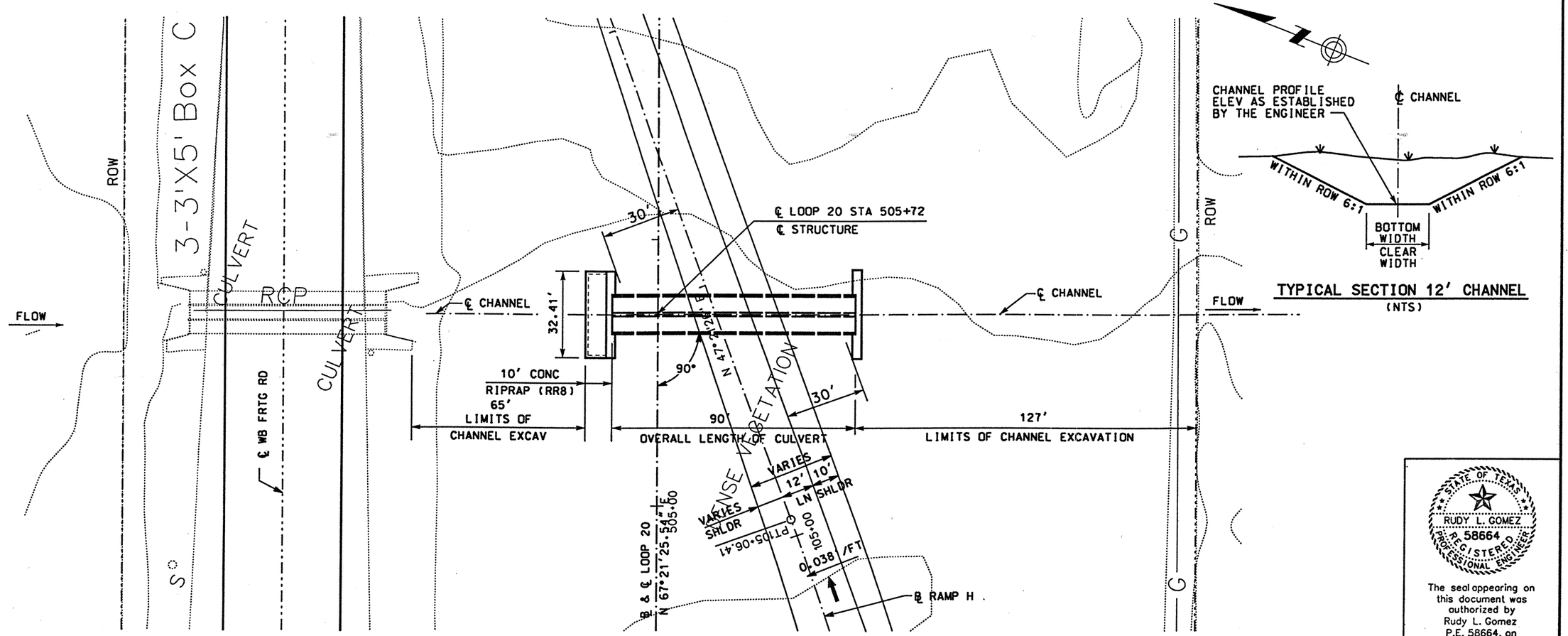

STATE OF TEXAS
RUDY L. GOMEZ
58664
REGISTERED PROFESSIONAL ENGINEER

The seal appearing on this document was authorized by Rudy L. Gomez P.E. 58664, on April 14, 1999.

DATE	BY	REV	REVISION

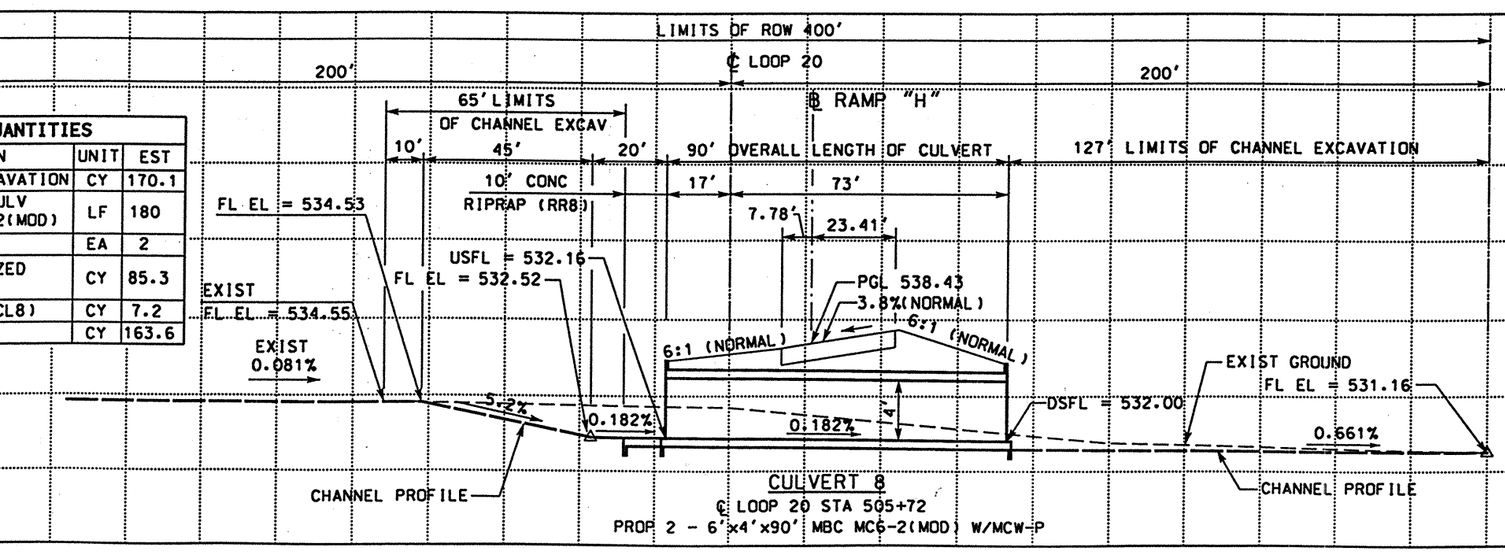

CULVERT 8
℄ LOOP 20 STA 505+72
PROP 2 - 6'x4'x90' MBC MC6-2(MOD) W/MCW-P

SUMMARY OF QUANTITIES

ITEM	DESCRIPTION	UNIT	EST
400	STRUCTURAL EXCAVATION	CY	170.1
462	CONCRETE BOX CULV (6' X 4') MC6-2(MOD)	LF	180
466	WINGWALL MCW-P	EA	2
400	CEMENT STABILIZED BACKFILL	CY	85.3
432	RIPRAP (CONC)(CL8)	CY	7.2
110	EXCAVATION	CY	163.6

© 1999 Texas Department of Transportation

Brown & Root
HOUSTON, TEXAS

LOOP 20

CULVERT #8
CULVERT LAYOUT

0 20 40
SCALE: 1" = 40' HORZ
1" = 10' VERT

SHEET 1 OF 1

FED RD DIV NO	STATE PROJECT NO	SHEET NO
6	C86-14-23	395

STATE	STATE DIST NO	COUNTY
TEXAS	22	WEBB

CONT	SECT	JOB	HIGHWAY NO
0086	14	023	LOOP 20

REF FILE(S): J01LOX01.FND, FND LV ON = 1-63
J01LOX01.ROW, ROW LV ON = 1-61,63
J01LOX01.BCK, BCK LV ON = 1-17,19-47
J01LOX01.EDP, EDP LV ON = 1-17,19-47
J40LOX01.ALG, ALG LV ON = 1,3-8,10-14,16-39
J01LOX01.BDR, BDR LV ON = 5,10,16,45,47,57,60-63

REF FILE(S): J01LOX01.UTI, UTI LV ON = 1-63
J01LOX01.ILL, ILL LV ON = 1-63

D13RHX01.DGN-08 04-14-99 BAR_HO_ES05 \HCIVIL\CF0039\PHASE2

HYDRAULIC DATA

Q_{50}	TW_{50}	HW $ELEV_{50}$	VELOCITY	Q_{100}	TW_{100}	HW $ELEV_{100}$	VELOCITY
CFS	FT	FT	FPS	CFS	FT	FT	FPS
926.0	494.77	496.17	6.43	1059.0	495.01	496.74	7.35

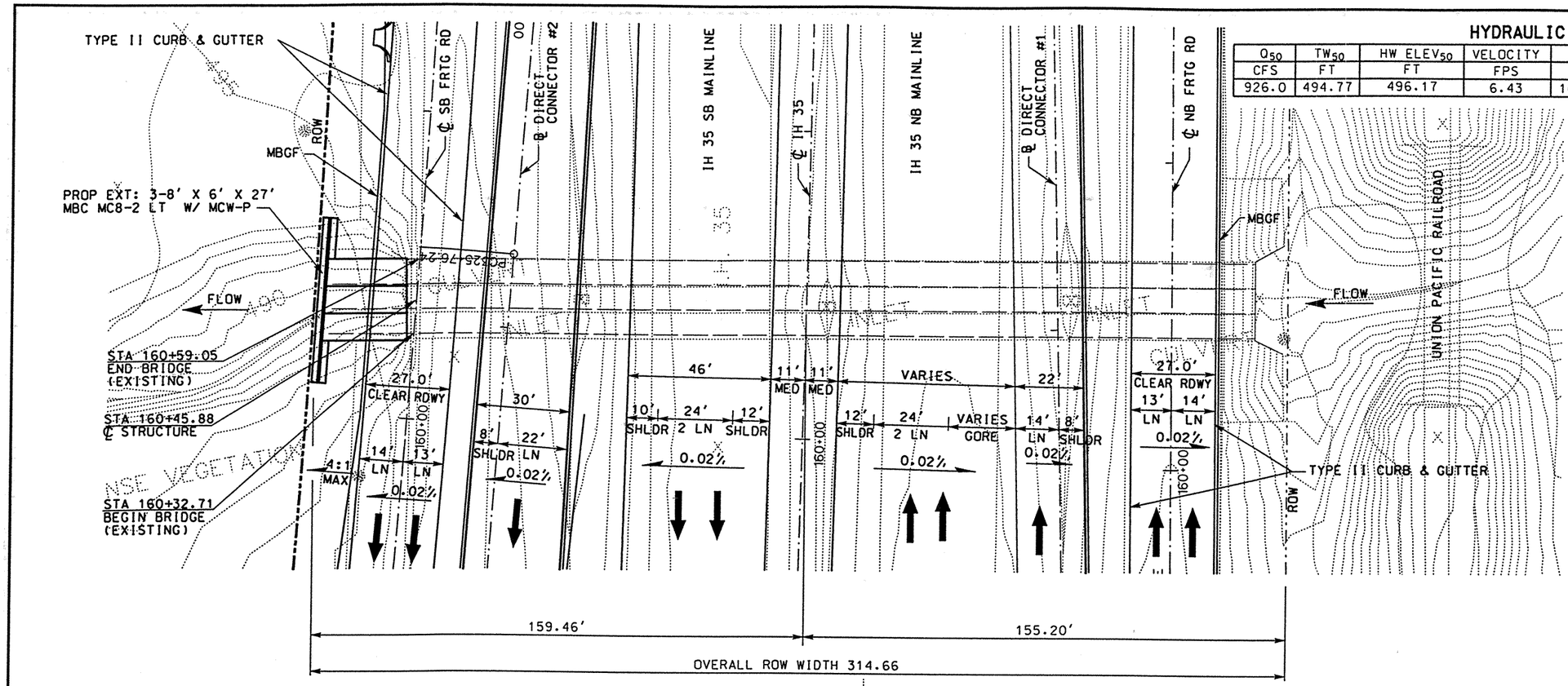

NOTE:

1. SEE IH 35 SB FRTG RD PLAN AND PROFILE SHEET 5 OF 14 FOR MBGF & TAS LOCATION.

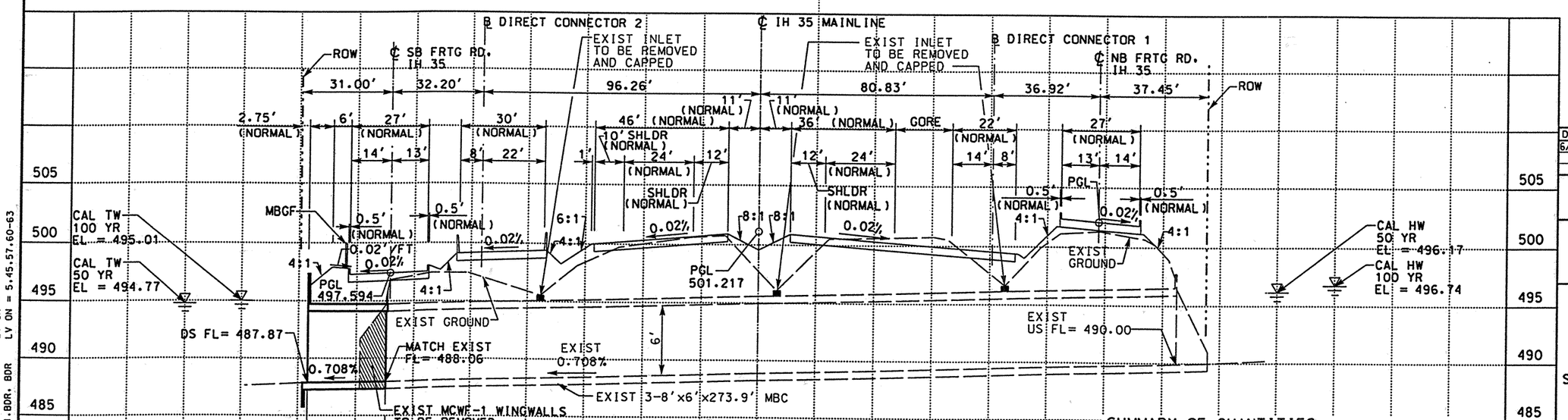

BRIDGE CLASS CULVERT S1 EXTENSION

℄ IH35 STA 160+45.881 (℄ SB FRTG RD STA 160+39.285)
EXIST 3-8' X 6' X 273.9' MBC MC8-1 AND MC8-2 W/MCWF-1 WINGWALLS
PROP EXT: 3-8' X 6' X 27' MBC MC8-2 LT W/ MCW-P
ROADWAY SECTIONS SHOWN NORMAL TO THE ROADWAY CENTERLINE

SUMMARY OF QUANTITIES

ITEM	DESCRIPTION	UNIT	EST
400	STRUCTURE EXCAVATION	CY	41.3
462	CONC BOX CULVERT (8'X6') MC8-2	LF	81
466	WINGWALL MCW-P	EA	1
400	CEMENT STABILIZED BACKFILL	CY	43.3

REV. 6-25-99

STATE OF TEXAS
RUDY L. GOMEZ
58664
REGISTERED PROFESSIONAL ENGINEER

The seal appearing on this document was authorized by Rudy L. Gomez P.E. 58664, on June 3, 1999.

DATE	BY	REV	REVISION
6/3/99	RG	01	PLAN INFO ADDED

© 1999 Texas Department of Transportation

Brown & Root
HOUSTON, TEXAS

IH 35

BRIDGE CLASS
CULVERT S1 EXTENSION
BRIDGE LAYOUT
SB FRTG RD STA 160+39.285

0 20 40
SCALE: 1" = 40' HORZ
1" = 10' VERT

SHEET 1 OF 1

FED RD DIV NO	STATE PROJECT NO	SHEET NO
6	NH-99(462)	396

STATE	STATE DIST NO	COUNTY
TEXAS	22	WEBB

CONT	SECT	JOB	HIGHWAY NO
0018	06	131	IH 35

REF FILE(S): J01LOX01.BDR, BDR
LV ON = 5,45,57,60-63
D13CSX04.DGN-09 06-07-99 BAR_HO_ES05 \HCIVIL\CF0039\PHASE2

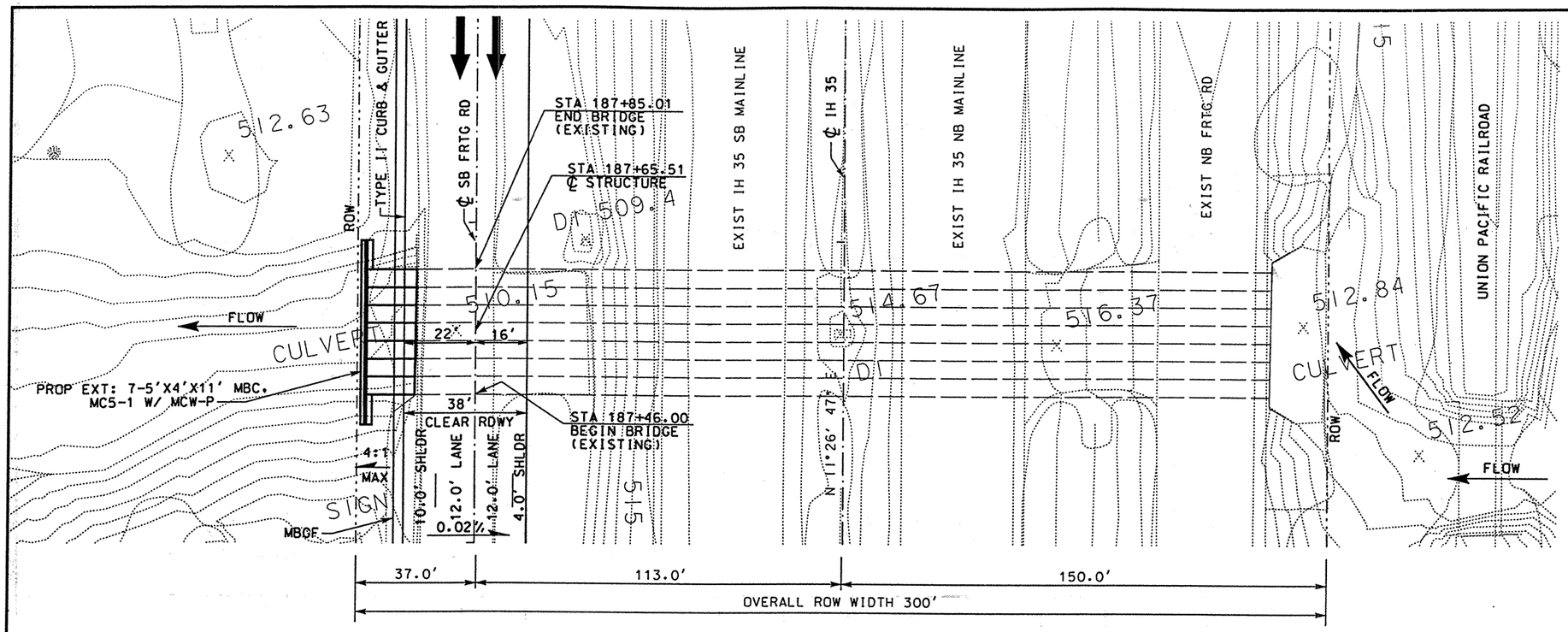

NOTE:

1. SEE IH 35 SB FRTG RD PLAN AND PROFILE SHEET 8 OF 14 FOR MBGF & TAS LOCATION.

HYDRAULIC DATA

Q_{50}	TW_{50}	HW $ELEV_{50}$	VELOCITY	Q_{100}	TW_{100}	HW $ELEV_{100}$	VELOCITY
CFS	FT	FT	FPS	CFS	FT	FT	FPS
2717.0	510.89	519.22	9.95	3124.0	511.19	519.26	10.01

SUMMARY OF QUANTITIES

ITEM	DESCRIPTION	UNIT	EST
400	STRUCTURE EXCAVATION	CY	37.5
462	CONC BOX CULVERT (7-5'X4') MC5-1	LF	77
466	WINGWALL MCW-P	EA	1
400	CEMENT STABILIZED BACKFILL	CY	22.4

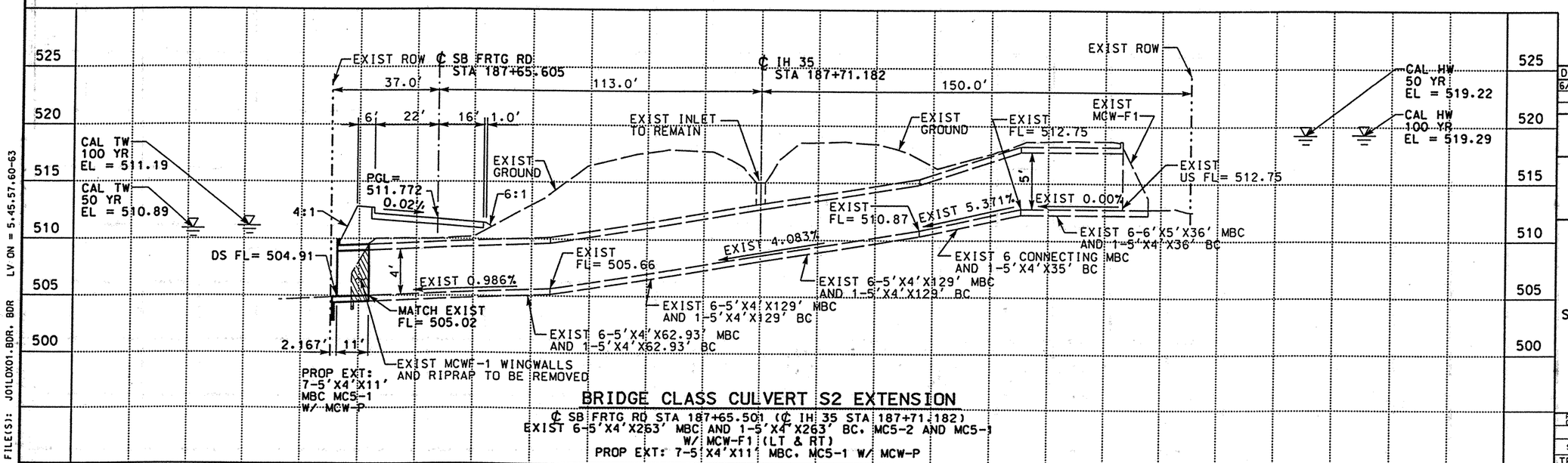

BRIDGE CLASS CULVERT S2 EXTENSION

℄ SB FRTG RD STA 187+65.501 (℄ IH 35 STA 187+71.182)
EXIST 6-5'X4'X263' MBC AND 1-5'X4' X263' BC. MC5-2 AND MC5-1
W/ MCW-F1 (LT & RT)
PROP EXT: 7-5'X4'X11' MBC. MC5-1 W/ MCW-P

REV. 6-25-99

STATE OF TEXAS
RUDY L. GOMEZ
58664
REGISTERED PROFESSIONAL ENGINEER

The seal appearing on this document was authorized by Rudy L. Gomez P.E. 58664, on June 3, 1999.

DATE	BY	REV	REVISION
6/3/99	RG	01	PLAN INFO ADDED

© 1999 Texas Department of Transportation

Brown & Root
HOUSTON, TEXAS

IH 35

BRIDGE CLASS
CULVERT S2 EXTENSION
BRIDGE LAYOUT
SB FRTG RD STA 187+65.605

0 20 40
SCALE: 1" = 40' HORZ
1" = 10' VERT

SHEET 1 OF 1

FED RD DIV NO	STATE PROJECT NO		SHEET NO
6	NH-99(462)		397
STATE	STATE DIST NO		COUNTY
TEXAS	22		WEBB
CONT	SECT	JOB	HIGHWAY NO
0018	06	131	IH 35

REF FILE(S): J01LOX01.BDR, BDR LV ON = 5,45,57,60-63

D13CSX06.DGN-08 06-07-99 BAR+HO+ES05 \HCIVIL\CF0039\PHASE2

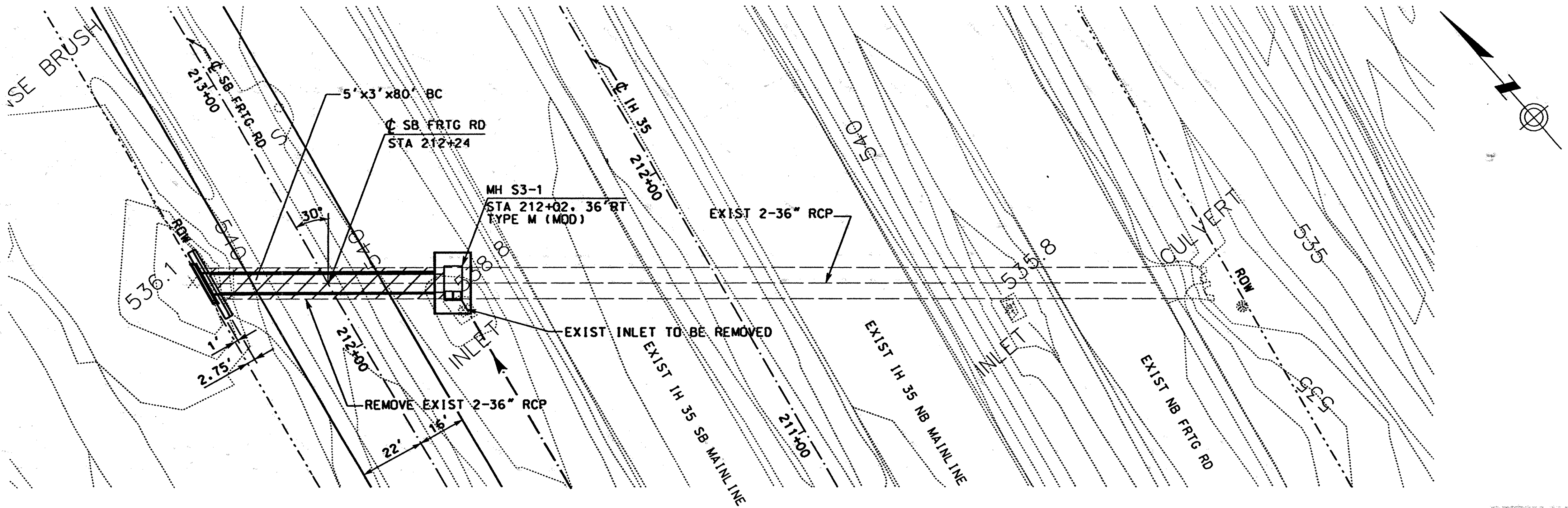

SUMMARY OF QUANTITIES

ITEM	DESCRIPTION	UNIT	EST
400	STRUCTURE EXCAVATION	CY	—
462	CONC BOX CULVERT (5'x3') SC-30°A (MOD)	LT	80
466	WINGWALL PW-30	EA	1
400	CEMENT STABILIZED BACKFILL	CY	48.2
465	MANHOLE TYPE M (MOD)	EA	1
496	REMOVE CONC (INLET)	EA	1
496	REMOVE OLD STR (PIPE)	LF	180

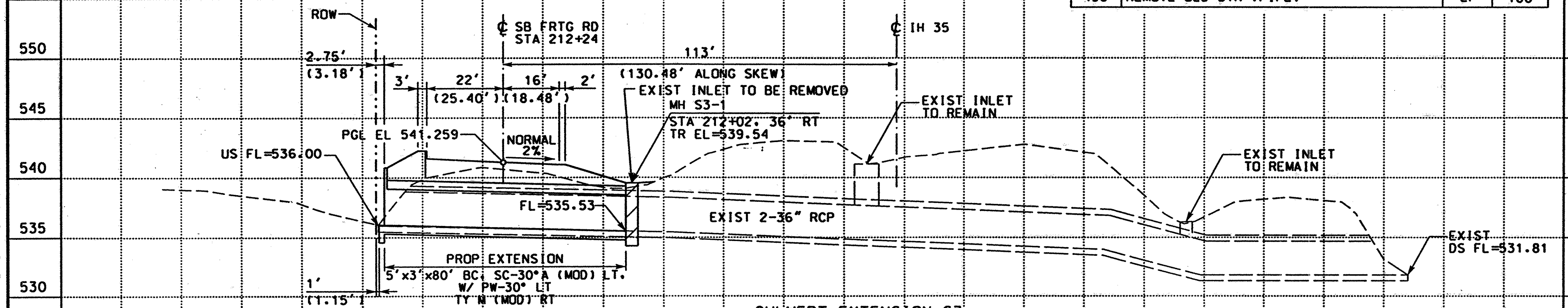

CULVERT EXTENSION S3

℄ SB FRTG RD STA 212+24, 30° LT FWD SKEW

EXIST: 2-36"x314' RCP W/ SAFETY END TREAT TY II, LT & RT
PROP: ① REMOVE 2-36"x85' RCP, SAFETY END TREAT TY II, LT & INLET, RT;
② PROP 5'x3'x80' BC, SC-30°A (MOD) LT W/ PW-30° LT & TYPE M (MOD) RT

NOTE: ( ) DIMENSION ALONG SKEW

STATE OF TEXAS
RUDY L. GOMEZ
58664
REGISTERED PROFESSIONAL ENGINEER

The seal appearing on this document was authorized by Rudy L. Gomez P.E. 58664, on April 2, 1999.

DATE	BY	REV	REVISION

© 1999 Texas Department of Transportation

Brown & Root
HOUSTON, TEXAS

IH 35

CULVERT S3 EXTENSION
℄ SB FRTG RD STA 212+24

0 20 40
SCALE: 1" = 40' HORZ
1" = 10' VERT

SHEET 1 OF 1

FED RD DIV NO	STATE PROJECT NO		SHEET NO
6	NH-99(462)		[illegible]
STATE	STATE DIST NO	COUNTY	
TEXAS	22	WEBB	
CONT	SECT	JOB	HIGHWAY NO
0018	06	131	IH 35

REF FILE(S): J01LOX01.BDR, BDR ..... LV ON = 5,45,57,60-63

D13CSX08.DGN-06 04-02-99 BAR_HO_ES05 \HCIVIL\CF0039\PHASE2

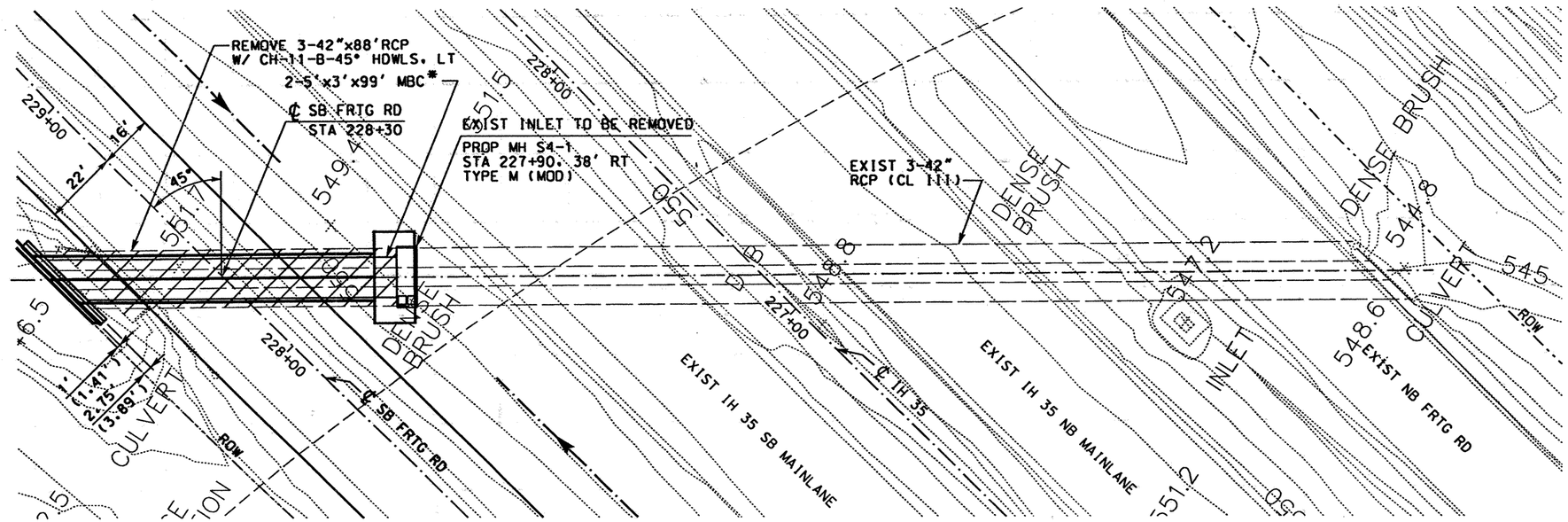

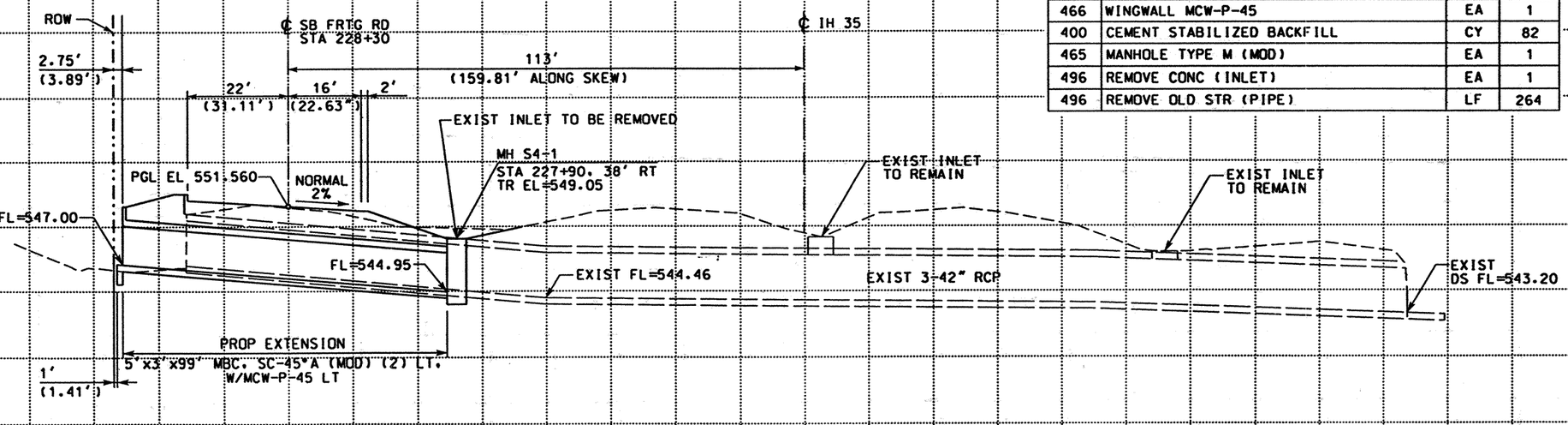

CULVERT EXTENSION S4

℄ SB FRTG RD STA 228+30. 45° LT FWD SKEW

EXIST: 3-42"x382' RCP (CL III) 45° LT FWD SKEW W/ CH-11-B-HDWLS
PROP: ① REMOVE 3-42"x88' RCP W/ CH-11-B-45° HDWLS. LT
② PROP 2-5'x3'x99' MBC. SC-45A (MOD) (2). LT W/ MCW-P-45. LT

NOTE: * USE 2 OF 5'x3' SC-45A (MOD)
( ) DIMENSION ALONG SKEW

SUMMARY OF QUANTITIES

ITEM	DESCRIPTION	UNIT	EST
400	STRUCTURE EXCAVATION	CY	—
462	CONC BOX CULVERT (5'x3') SC-45°A (MOD)	LF	198
466	WINGWALL MCW-P-45	EA	1
400	CEMENT STABILIZED BACKFILL	CY	82
465	MANHOLE TYPE M (MOD)	EA	1
496	REMOVE CONC (INLET)	EA	1
496	REMOVE OLD STR (PIPE)	LF	264

STATE OF TEXAS
RUDY L. GOMEZ
58664
REGISTERED PROFESSIONAL ENGINEER

The seal appearing on this document was authorized by Rudy L. Gomez P.E. 58664, on April 2, 1999.

Rudy L. Gomez

DATE	BY	REV	REVISION

© 1999 Texas Department of Transportation

Brown & Root
HOUSTON, TEXAS

IH 35

CULVERT S4 EXTENSION
℄ SB FRTG RD STA 228+30

0 20 40
SCALE: 1" = 40' HORZ
1" = 10' VERT

SHEET 1 OF 1

FED RD DIV NO	STATE PROJECT NO	SHEET NO
6	NH-99(462)	377

STATE	STATE DIST NO	COUNTY
TEXAS	22	WEBB

CONT	SECT	JOB	HIGHWAY NO
0018	06	131	IH 35

REF FILE(S): J01LOX01.BDR, BDR
LV ON = 5,45,57,60-63
LV ON
LV ON
LV ON
LV ON
LV ON

D13GSX07.DGN-07 04-02-99 BAR_HO_ES05 \HCIWL\CF0039\PHASE2

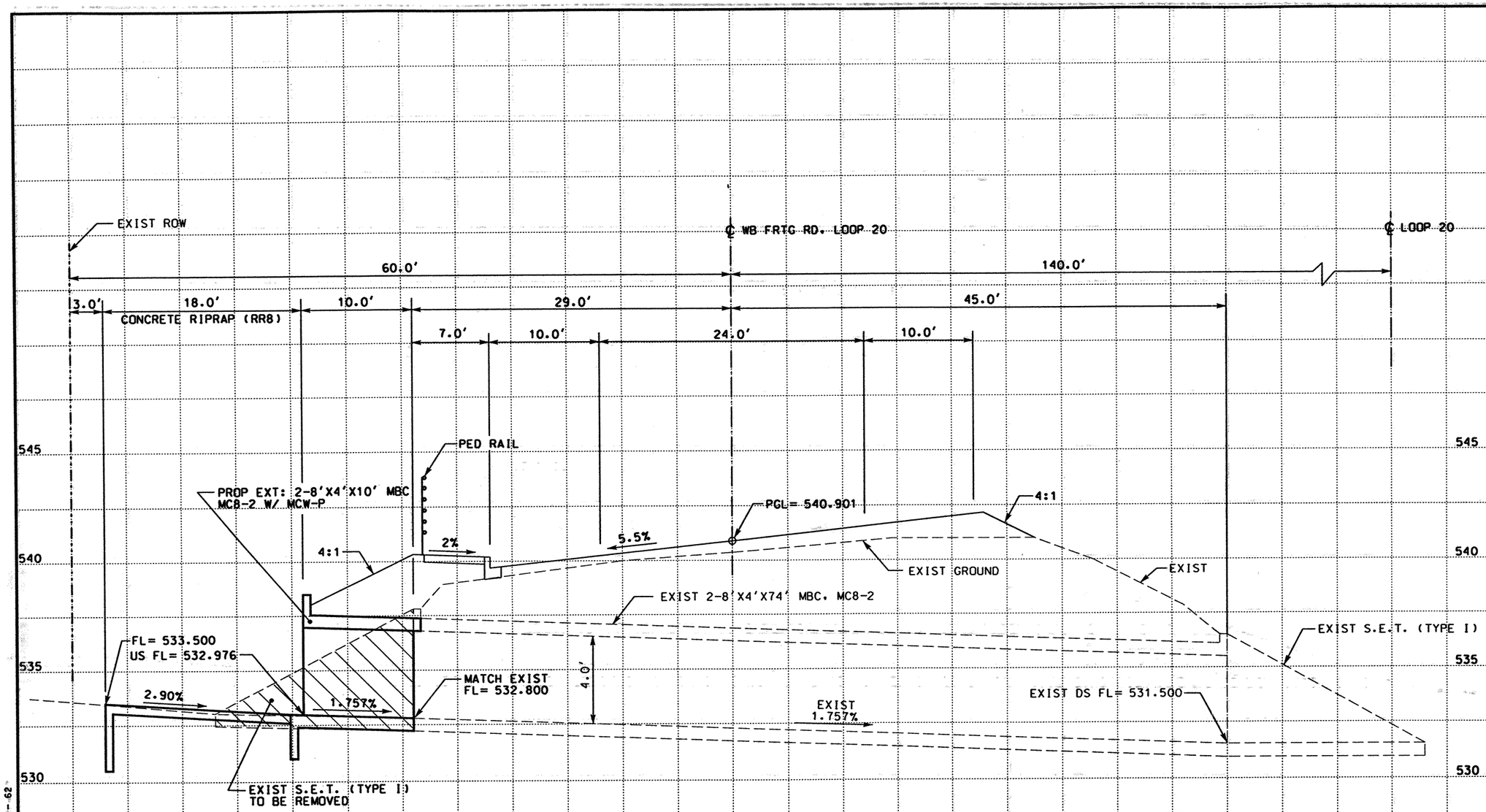

CULVERT W6 EXTENSION

℄ WB FRONTAGE RD STA 470+55.341
EXIST 2-8'X4'X74' MBC, MC8-2 W/ WS-M-N-4 (LT & RT)
PROP EXT: 2-8'X4'X10' LT W/ MCW-P

NOTE:

1. CONCRETE RIPRAP CONFORM TO RR8.
2. SEE LOOP 20 WB FRTG RD PLAN & PROFILE SHEET 5 OF 10 FOR PED RAIL LOCATION.

SUMMARY OF QUANTITIES

ITEM	DESCRIPTION	UNIT	EST
400	STRUCTURE EXCAVATION	CY	29.2
462	CONC BOX CULVERT (8'X4') MC8-2	LF	20
466	WINGWALL MCW-P	EA	1
400	CEMENT STABILIZED BACKFILL	CY	11.7
432	RIPRAP (CONC) (CL B)	CY	9.3

STATE OF TEXAS
RUDY L. GOMEZ
58664
REGISTERED PROFESSIONAL ENGINEER

The seal appearing on this document was authorized by Rudy L. Gomez P.E. 58664, on April 2, 1999.

DATE	BY	REV	REVISION

© 1999 Texas Department of Transportation

Brown & Root
HOUSTON, TEXAS

LOOP 20

CULVERT W6 EXTENSION
℄ WB FRTG RD STA 470+55.341

0 5 10
1" = 10' HORZ
1" = 5' VERT

SHEET 1 OF 1

FED RD DIV NO	STATE PROJECT NO		SHEET NO
6	C86-14-23		400
STATE	STATE DIST NO		COUNTY
TEXAS	22		WEBB
CONT	SECT	JOB	HIGHWAY NO
0086	14	023	LOOP 20

REF FILE(S): J01LOX01.BDR, BDR LV ON = 5:30:43:45:57:60 - 62

D13CSX03.DGN-06 04-01-99 BAR_HO_ES05 \HCIVIL\CF0039\PHASE2

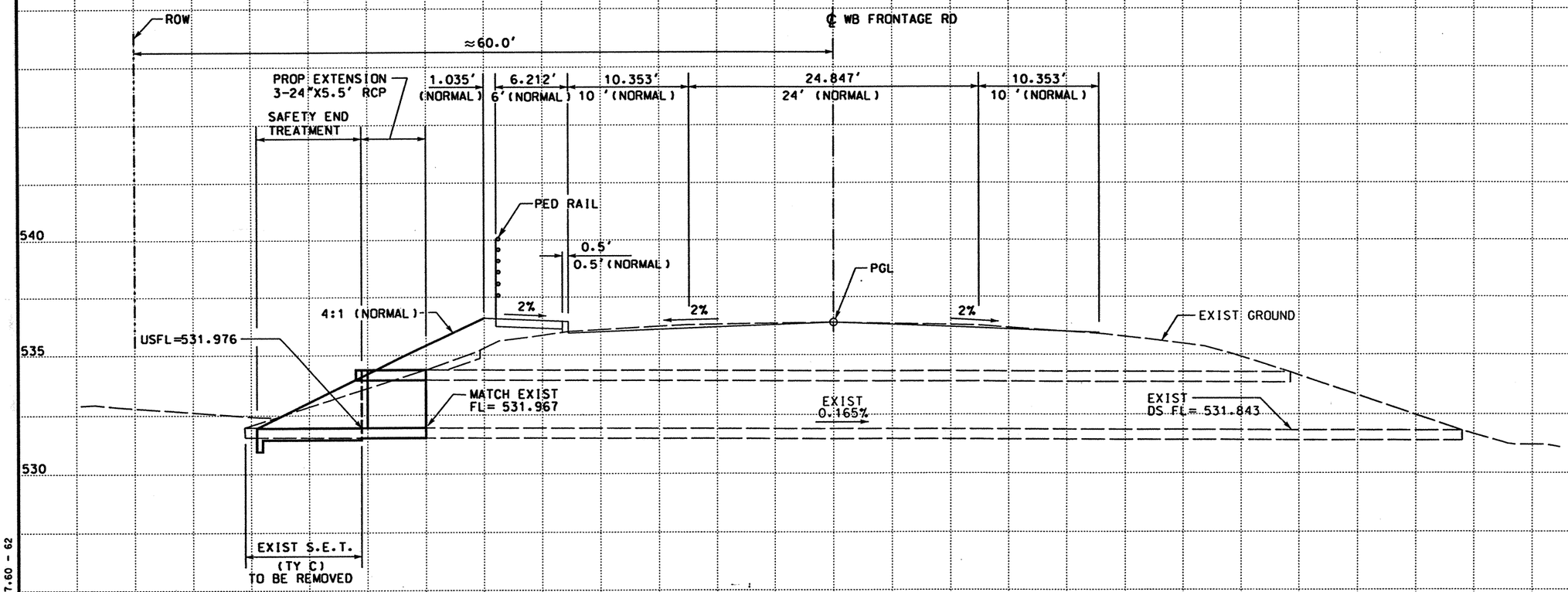

CULVERT W7 EXTENSION

℄ WB FRTG RD STA 481+42.189

EXIST 3-24"X68'RCP 15°LT FWD SKEW. W/ S.E.T.(TY C)(6:1)(LT & RT)

PROP EXT: 3-24"X5.5' RCP 15° LT FWD SKEW. W/ S.E.T.-SC(LT)

NOTE:

1. SEE LOOP 20 WB FRTG RD PLAN & PROFILE SHEET 7 OF 10 FOR PED RAIL LOCATION.

SUMMARY OF QUANTITIES

ITEM	DESCRIPTION	UNIT	EST
400	STRUCTURE EXCAVATION	CY	7.4
400	CEMENT STABILIZED BACKFILL	CY	4.8
467	SAFETY END TREAT (TY II) (24") (RCP) (4:1) (C)	EA	1
464	RC PIPE (CL III) (24")	LF	16.5

STATE OF TEXAS
RUDY L. GOMEZ
58664
REGISTERED PROFESSIONAL ENGINEER

The seal appearing on this document was authorized by Rudy L. Gomez P.E. 58664, on April 2, 1999.

DATE	BY	REV	REVISION

© 1999 Texas Department of Transportation

Brown & Root
HOUSTON, TEXAS

LOOP 20

CULVERT W7 EXTENSION
℄ WB FRTG RD STA 481+42.189

0 5 10
1" = 10' HORZ
1" = 5' VERT

SHEET 1 OF 1

FED RD DIV NO	STATE PROJECT NO		SHEET NO
6	C86-14-23		401
STATE	STATE DIST NO		COUNTY
TEXAS	22		WEBB
CONT	SECT	JOB	HIGHWAY NO
0086	14	023	LOOP 20

REF FILE(S): J01LOX01.BDR. BDR LV ON = 5.30.43.45.57.60 - 62

D13CSX05.DGN-04 04-01-99 BAR_HO_ES05 \HCIVIL\CF0039\PHASE2

JOB CONTROL : 3483
JOB SECTION : 01
JOB NUMBER : 010
PROJECT DESCRIPTION : CF-0039
DESIGN FREQUENCY : 50 Year
ANALYSYS FREQUENCY : 25 Year
MEASUREMENT UNITS: Input ENGLISH Output ENGLISH

Runoff Computations

I.D.	C Value	Area (acres)	Tc (min)	Tc Used (min)	Intensity (in/hr)	Supply Q (cfs)	Total Q (cfs)
G 1	0.350	6.020	10.00	10.00	10.083	0.000	21.245
-GRASS	0.350	6.020					
R 1	0.750	111.050	27.00	27.00	6.191	0.000	515.630
-SPECIAL DEVELOPMENT	0.750		111.050				
G 4	0.694	0.160	10.00	10.00	10.083	0.000	1.119
-PAVEMENT	0.900	0.100					
-GRASS	0.350	0.060					
G 9	0.824	0.290	10.00	10.00	10.083	0.000	2.410
-PAVEMENT	0.900	0.250					
-GRASS	0.350	0.040					
G 10	0.728	4.250	10.00	10.00	10.083	0.000	31.191
-PAVEMENT	0.900	2.920					
-GRASS	0.350	1.330					
G 21	0.690	1.020	10.00	10.00	10.083	0.000	7.093
-PAVEMENT	0.900	0.630					
-GRASS	0.350	0.390					
G 22	0.712	1.110	10.00	10.00	10.083	0.000	7.965
-PAVEMENT	0.900	0.730					
-GRASS	0.350	0.380					
G 23	0.688	1.010	10.00	10.00	10.083	0.000	7.003
-PAVEMENT	0.900	0.620					
-GRASS	0.350	0.390					
G 24	0.788	0.590	10.00	10.00	10.083	0.000	4.689
-PAVEMENT	0.900	0.470					
-GRASS	0.350	0.120					
G 25	0.782	2.290	10.00	10.00	10.083	0.000	18.064
-PAVEMENT	0.900	1.800					
-GRASS	0.350	0.490					
G 26	0.538	1.810	10.00	10.00	10.083	0.000	9.826
-PAVEMENT	0.900	0.620					
-GRASS	0.350	1.190					
G 27	0.533	0.450	10.00	10.00	10.083	0.000	2.420
-PAVEMENT	0.900	0.150					
-GRASS	0.350	0.300					
G 28	0.745	0.320	10.00	10.00	10.083	0.000	2.405
-PAVEMENT	0.900	0.230					
-GRASS	0.350	0.090					
G 29	0.900	0.550	10.00	10.00	10.083	0.000	4.991
-PAVEMENT	0.900	0.550					
G 30	0.900	0.460	10.00	10.00	10.083	0.000	4.174
-PAVEMENT	0.900	0.460					
G 31	0.649	0.790	10.00	10.00	10.083	0.000	5.173
-PAVEMENT	0.900	0.430					
-GRASS	0.350	0.360					
G 32	0.724	0.470	10.00	10.00	10.083	0.000	3.433
-PAVEMENT	0.900	0.320					
-GRASS	0.350	0.150					
G 33	0.696	0.700	10.00	10.00	10.083	0.000	4.910
-PAVEMENT	0.900	0.440					
-GRASS	0.350	0.260					
G 34	0.635	2.120	10.00	10.00	10.083	0.000	13.582
-PAVEMENT	0.900	1.100					
-GRASS	0.350	1.020					
G 35	0.900	0.420	10.00	10.00	10.083	0.000	3.811
-PAVEMENT	0.900	0.420					
G 36	0.539	0.320	10.00	10.00	10.083	0.000	1.739
-PAVEMENT	0.900	0.110					
-GRASS	0.350	0.210					
G 37	0.646	0.260	10.00	10.00	10.083	0.000	1.694
-PAVEMENT	0.900	0.140					
-GRASS	0.350	0.120					
G 38	0.515	0.500	10.00	10.00	10.083	0.000	2.596
-PAVEMENT	0.900	0.150					
-GRASS	0.350	0.350					
G 39	0.515	0.500	10.00	10.00	10.083	0.000	2.596
-PAVEMENT	0.900	0.150					
-GRASS	0.350	0.350					
G 40	0.900	0.330	10.00	10.00	10.083	0.000	2.995
-PAVEMENT	0.900	0.330					
G 41	0.566	1.450	10.00	10.00	10.083	0.000	8.278
-PAVEMENT	0.900	0.570					
-GRASS	0.350	0.880					
G 42	0.831	0.960	10.00	10.00	10.083	0.000	8.046
-PAVEMENT	0.900	0.840					
-GRASS	0.350	0.120					
G 43	0.680	0.150	10.00	10.00	10.083	0.000	1.028
-PAVEMENT	0.900	0.090					
-GRASS	0.350	0.060					
G 44	0.350	0.980	10.00	10.00	10.083	0.000	3.458
-GRASS	0.350	0.980					
G 45	0.682	1.360	10.00	10.00	10.083	0.000	9.347
-PAVEMENT	0.900	0.820					
-GRASS	0.350	0.540					
G 46	0.735	0.100	10.00	10.00	10.083	0.000	0.741
-PAVEMENT	0.900	0.070					
-GRASS	0.350	0.030					
G 48	0.613	0.670	10.00	10.00	10.083	0.000	4.139
-PAVEMENT	0.900	0.320					
-GRASS	0.350	0.350					
G 49	0.675	1.270	10.00	10.00	10.083	0.000	8.641
-PAVEMENT	0.900	0.750					
-GRASS	0.350	0.520					

Runoff Computations

I.D.	C Value	Area (acres)	Tc (min)	Tc Used (min)	Intensity (in/hr)	Supply Q (cfs)	Total Q (cfs)
G 50	0.486	1.380	10.00	10.00	10.083	0.000	6.756
-PAVEMENT	0.900	0.340					
-GRASS	0.350	1.040					
G 51	0.643	0.150	10.00	10.00	10.083	0.000	0.973
-PAVEMENT	0.900	0.080					
-GRASS	0.350	0.070					
G 52	0.580	1.100	10.00	10.00	10.083	0.000	6.433
-PAVEMENT	0.900	0.460					
-GRASS	0.350	0.640					
G 53	0.592	0.910	10.00	10.00	10.083	0.000	5.430
-PAVEMENT	0.900	0.400					
-GRASS	0.350	0.510					
G 54	0.782	0.140	10.00	10.00	10.083	0.000	1.104
-PAVEMENT	0.900	0.110					
-GRASS	0.350	0.030					
G 55	0.350	0.120	10.00	10.00	10.083	0.000	0.423
-GRASS	0.350	0.120					
G 56	0.350	0.130	10.00	10.00	10.083	0.000	0.459
-GRASS	0.350	0.130					
G 57	0.828	1.840	10.00	10.00	10.083	0.000	15.366
-PAVEMENT	0.900	1.600					
-GRASS	0.350	0.240					
G 58	0.611	1.330	10.00	10.00	10.083	0.000	8.187
-PAVEMENT	0.900	0.630					
-GRASS	0.350	0.700					
G 59	0.650	59.490	29.44	29.44	5.887	0.000	227.628
-FUTURE DEVELOPMENT	0.650		59.490				
G 60	0.350	0.480	10.00	10.00	10.083	0.000	1.694
-GRASS	0.350	0.480					
G 61	0.746	0.930	10.00	10.00	10.083	0.000	6.998
-PAVEMENT	0.900	0.670					
-GRASS	0.350	0.260					
G 62	0.625	1.120	10.00	10.00	10.083	0.000	7.058
-PAVEMENT	0.900	0.560					
-GRASS	0.350	0.560					
G 63	0.569	1.580	10.00	10.00	10.083	0.000	9.070
-PAVEMENT	0.900	0.630					
-GRASS	0.350	0.950					
G 64	0.870	0.370	10.00	10.00	10.083	0.000	3.247
-PAVEMENT	0.900	0.350					
-GRASS	0.350	0.020					
G 65	0.900	0.090	10.00	10.00	10.083	0.000	0.817
-PAVEMENT	0.900	0.090					
G 66	0.488	0.480	10.00	10.00	10.083	0.000	2.359
-PAVEMENT	0.900	0.120					
-GRASS	0.350	0.360					
G 67	0.671	0.600	10.00	10.00	10.083	0.000	4.058
-PAVEMENT	0.900	0.350					
-GRASS	0.350	0.250					
G 68	0.607	0.470	10.00	10.00	10.083	0.000	2.879
-PAVEMENT	0.900	0.220					
-GRASS	0.350	0.250					
G 69	0.900	0.680	10.00	10.00	10.083	0.000	6.171
-PAVEMENT	0.900	0.680					
G 70	0.523	0.920	10.00	10.00	10.083	0.000	4.855
-PAVEMENT	0.900	0.290					
-GRASS	0.350	0.630					
G 71	0.350	0.230	10.00	10.00	10.083	0.000	0.812
-GRASS	0.350	0.230					
G 72	0.900	0.090	10.00	10.00	10.083	0.000	0.817
-PAVEMENT	0.900	0.090					
G 73	0.556	0.800	10.00	10.00	10.083	0.000	4.487
-PAVEMENT	0.900	0.300					
-GRASS	0.350	0.500					
G 74	0.813	1.640	10.00	10.00	10.083	0.000	13.446
-PAVEMENT	0.900	1.070					
-FUTURE DEVELOPMENT	0.650		0.570				
G 75	0.618	0.800	10.00	10.00	10.083	0.000	4.986
-PAVEMENT	0.900	0.390					
-GRASS	0.350	0.410					
G 76	0.900	0.390	10.00	10.00	10.083	0.000	3.539
-PAVEMENT	0.900	0.390					
G 77	0.900	0.090	10.00	10.00	10.083	0.000	0.817
-PAVEMENT	0.900	0.090					
G 78	0.772	2.070	10.00	10.00	10.083	0.000	16.123
-PAVEMENT	0.900	1.590					
-GRASS	0.350	0.480					
G 79	0.606	0.730	10.00	10.00	10.083	0.000	4.462
-PAVEMENT	0.900	0.340					
-GRASS	0.350	0.390					
G 80	0.688	0.520	10.00	10.00	10.083	0.000	3.610
-PAVEMENT	0.900	0.320					
-GRASS	0.350	0.200					
G 81	0.672	1.450	10.00	10.00	10.083	0.000	9.831
-PAVEMENT	0.900	0.850					
-GRASS	0.350	0.600					
G 82	0.717	0.480	10.00	10.00	10.083	0.000	3.469
-PAVEMENT	0.900	0.320					
-GRASS	0.350	0.160					
G 84	0.598	0.600	10.00	10.00	10.083	0.000	3.615
-PAVEMENT	0.900	0.270					
-GRASS	0.350	0.330					
G 85	0.514	0.570	10.00	10.00	10.083	0.000	2.954
-PAVEMENT	0.900	0.170					
-GRASS	0.350	0.400					
G 89	0.350	0.510	10.00	10.00	10.083	0.000	1.800
-GRASS	0.350	0.510					
G 90	0.722	2.560	10.00	10.00	10.083	0.000	18.628
-PAVEMENT	0.900	1.730					
-GRASS	0.350	0.830					

Runoff Computations

I.D.	C Value	Area (acres)	Tc (min)	Tc Used (min)	Intensity (in/hr)	Supply Q (cfs)	Total Q (cfs)
G 91	0.747	0.860	10.00	10.00	10.083	0.000	6.473
-PAVEMENT	0.900	0.620					
-GRASS	0.350	0.240					
G 92	0.643	0.470	10.00	10.00	10.083	0.000	3.045
-PAVEMENT	0.900	0.250					
-GRASS	0.350	0.220					
G 93	0.883	1.600	10.00	10.00	10.083	0.000	14.242
-PAVEMENT	0.900	1.550					
-GRASS	0.350	0.050					
G 94	0.698	0.980	10.00	10.00	10.083	0.000	6.897
-PAVEMENT	0.900	0.620					
-GRASS	0.350	0.360					
G 95	0.900	0.350	10.00	10.00	10.083	0.000	3.176
-PAVEMENT	0.900	0.350					
G 96	0.900	0.790	10.00	10.00	10.083	0.000	7.169
-PAVEMENT	0.900	0.790					
G 97	0.753	0.970	10.00	10.00	10.083	0.000	7.361
-PAVEMENT	0.900	0.710					
-GRASS	0.350	0.260					
G 98	0.350	0.300	10.00	10.00	10.083	0.000	1.059
-GRASS	0.350	0.300					
G 99	0.542	1.430	10.00	10.00	10.083	0.000	7.819
-PAVEMENT	0.900	0.500					
-GRASS	0.350	0.930					
G 100	0.350	0.120	10.00	10.00	10.083	0.000	0.423
-GRASS	0.350	0.120					
G 101	0.350	0.120	10.00	10.00	10.083	0.000	0.423
-GRASS	0.350	0.120					
G 104	0.577	1.310	10.00	10.00	10.083	0.000	7.618
-PAVEMENT	0.900	0.540					
-GRASS	0.350	0.770					
G 105	0.650	1.190	10.00	10.00	10.083	0.000	7.804
-PAVEMENT	0.900	0.650					
-GRASS	0.350	0.540					
G 106	0.682	0.580	5.00	10.00	10.083	0.000	3.988
-PAVEMENT	0.900	0.350					
-GRASS	0.350	0.230					
G 107	0.680	0.600	5.00	10.00	10.083	0.000	4.114
-PAVEMENT	0.900	0.360					
-GRASS	0.350	0.240					
G 108	0.548	1.000	10.00	10.00	10.083	0.000	5.525
-PAVEMENT	0.900	0.360					
-GRASS	0.350	0.640					
G 109	0.694	1.310	10.00	10.00	10.083	0.000	9.170
-PAVEMENT	0.900	0.820					
-GRASS	0.350	0.490					
G 110	0.644	0.430	10.00	10.00	10.083	0.000	2.793
-PAVEMENT	0.900	0.230					
-GRASS	0.350	0.200					
G 111	0.711	3.430	10.00	10.00	10.083	0.000	24.582
-PAVEMENT	0.900	2.250					
-GRASS	0.350	1.180					
G 112	0.700	0.550	10.00	10.00	10.083	0.000	3.882
-PAVEMENT	0.900	0.350					
-GRASS	0.350	0.200					
G 114	0.900	1.530	10.00	10.00	10.083	0.000	13.884
-PAVEMENT	0.900	1.530					

SEE REVISION
REV. 6-25-99

STATE OF TEXAS
RUDY L. GOMEZ
R.P.E. 58664
REGISTERED PROFESSIONAL ENGINEER

The seal appearing on this document was authorized by Rudy L. Gomez P.E. 58664, on June 16, 1999.

DATE	BY	REV	REVISION
6-3-99	RG	1	HYDRAULIC DATA
6-16-99	RG	2	HYDRAULIC DATA

© 1999 Texas Department of Transportation

Brown & Root
HOUSTON, TEXAS

LOOP 20

HYDRAULIC DATA SUMMARY
SYSTEM G

SHEET 1 OF 15

FED RD DIV NO	STATE PROJECT NO	SHEET NO
6	C86-14-23	402

STATE	STATE DIST NO	COUNTY
TEXAS	22	WEBB

CONT	SECT	JOB	HIGHWAY NO
0086	14	023	LOOP 20

REF FILE(S): J01LOX01.BDR. BDR LV ON = 16.45.46.57.60-62

D13WSX08.DGN-04 06-16-99 BAR_HO_ES05 \HCIVIL\CF0039\PHASE2

WinStorm TxDOT STORM DRAIN DESIGN Version 1.3 September 1997 PAGE 1
Thu Oct 07 13:28:07 1999

JOB CONTROL : 3483
JOB SECTION : 01
JOB NUMBER : 010
PROJECT DESCRIPTION : CF-0039
DESIGN FREQUENCY : 50 Year
ANALYSYS FREQUENCY : 25 Year
MEASUREMENT UNITS: Input ENGLISH Output ENGLISH

Runoff Computations

I.D.	C Value	Area (acres)	Tc (min)	Tc Used (min)	Intensity (in/hr)	Supply Q (cfs)	Total Q (cfs)
G 1	0.350	6.020	10.00	10.00	10.083	0.000	21.245
-GRASS	0.350	6.020					
R 1	0.750	111.050	27.00	27.00	6.191	0.000	515.630
-SPECIAL DEVELOPMENT	0.750	111.050					
G 4	0.694	0.160	10.00	10.00	10.083	0.000	1.119
-PAVEMENT	0.900	0.100					
-GRASS	0.350	0.060					
G 9	0.824	0.290	10.00	10.00	10.083	0.000	2.410
-PAVEMENT	0.900	0.250					
-GRASS	0.350	0.040					
G 10	0.728	4.250	10.00	10.00	10.083	0.000	31.191
-PAVEMENT	0.900	2.920					
-GRASS	0.350	1.330					
G 21	0.690	1.020	10.00	10.00	10.083	0.000	7.093
-PAVEMENT	0.900	0.630					
-GRASS	0.350	0.390					
G 22	0.712	1.110	10.00	10.00	10.083	0.000	7.965
-PAVEMENT	0.900	0.730					
-GRASS	0.350	0.380					
G 23	0.688	1.010	10.00	10.00	10.083	0.000	7.003
-PAVEMENT	0.900	0.620					
-GRASS	0.350	0.390					
G 24	0.788	0.590	10.00	10.00	10.083	0.000	4.689
-PAVEMENT	0.900	0.470					
-GRASS	0.350	0.120					
G 25	0.782	2.290	10.00	10.00	10.083	0.000	18.064
-PAVEMENT	0.900	1.800					
-GRASS	0.350	0.490					
G 26	0.538	1.810	10.00	10.00	10.083	0.000	9.826
-PAVEMENT	0.900	0.620					
-GRASS	0.350	1.190					
G 27	0.533	0.450	10.00	10.00	10.083	0.000	2.420
-PAVEMENT	0.900	0.150					
-GRASS	0.350	0.300					
G 28	0.745	0.320	10.00	10.00	10.083	0.000	2.405
-PAVEMENT	0.900	0.230					
-GRASS	0.350	0.090					
G 29	0.900	0.550	10.00	10.00	10.083	0.000	4.991
-PAVEMENT	0.900	0.550					
G 30	0.900	0.460	10.00	10.00	10.083	0.000	4.174
-PAVEMENT	0.900	0.460					
G 31	0.649	0.790	10.00	10.00	10.083	0.000	5.173
-PAVEMENT	0.900	0.430					
-GRASS	0.350	0.360					
G 32	0.724	0.470	10.00	10.00	10.083	0.000	3.433
-PAVEMENT	0.900	0.320					
-GRASS	0.350	0.150					
G 33	0.696	0.700	10.00	10.00	10.083	0.000	4.910
-PAVEMENT	0.900	0.440					
-GRASS	0.350	0.260					
G 34	0.635	2.120	10.00	10.00	10.083	0.000	13.582
-PAVEMENT	0.900	1.100					
-GRASS	0.350	1.020					
G 35	0.900	0.420	10.00	10.00	10.083	0.000	3.811
-PAVEMENT	0.900	0.420					
G 36	0.539	0.320	10.00	10.00	10.083	0.000	1.739
-PAVEMENT	0.900	0.110					
-GRASS	0.350	0.210					
G 37	0.646	0.260	10.00	10.00	10.083	0.000	1.694
-PAVEMENT	0.900	0.140					
-GRASS	0.350	0.120					
G 38	0.515	0.500	10.00	10.00	10.083	0.000	2.596
-PAVEMENT	0.900	0.150					
-GRASS	0.350	0.350					
G 39	0.515	0.500	10.00	10.00	10.083	0.000	2.596
-PAVEMENT	0.900	0.150					
-GRASS	0.350	0.350					
G 40	0.900	0.330	10.00	10.00	10.083	0.000	2.995
-PAVEMENT	0.900	0.330					
G 41	0.566	1.450	10.00	10.00	10.083	0.000	8.278
-PAVEMENT	0.900	0.570					
-GRASS	0.350	0.880					
G 42	0.831	0.960	10.00	10.00	10.083	0.000	8.046
-PAVEMENT	0.900	0.840					
-GRASS	0.350	0.120					
G 43	0.680	0.150	10.00	10.00	10.083	0.000	1.028
-PAVEMENT	0.900	0.090					
-GRASS	0.350	0.060					
G 44	0.350	0.980	10.00	10.00	10.083	0.000	3.458
-GRASS	0.350	0.980					
G 45	0.682	1.360	10.00	10.00	10.083	0.000	9.347
-PAVEMENT	0.900	0.820					
-GRASS	0.350	0.540					
G 46	0.735	0.100	10.00	10.00	10.083	0.000	0.741
-PAVEMENT	0.900	0.070					
-GRASS	0.350	0.030					
G 48	0.613	0.670	10.00	10.00	10.083	0.000	4.139
-PAVEMENT	0.900	0.320					
-GRASS	0.350	0.350					
G 49	0.675	1.270	10.00	10.00	*		
10.083	0.000	8.641					
-PAVEMENT	0.900	0.750					
-GRASS	0.350	0.520					

Runoff Computations

I.D.	C Value	Area (acres)	Tc (min)	Tc Used (min)	Intensity (in/hr)	Supply Q (cfs)	Total Q (cfs)
G 50	0.486	1.380	10.00	10.00	10.083	0.000	6.756
-PAVEMENT	0.900	0.340					
-GRASS	0.350	1.040					
G 51	0.643	0.150	10.00	10.00	10.083	0.000	0.973
-PAVEMENT	0.900	0.080					
-GRASS	0.350	0.070					
G 52	0.580	1.100	10.00	10.00	10.083	0.000	6.433
-PAVEMENT	0.900	0.460					
-GRASS	0.350	0.640					
G 53	0.592	0.910	10.00	10.00	10.083	0.000	5.430
-PAVEMENT	0.900	0.400					
-GRASS	0.350	0.510					
G 54	0.782	0.140	10.00	10.00	10.083	0.000	1.104
-PAVEMENT	0.900	0.110					
-GRASS	0.350	0.030					
G 55	0.350	0.120	10.00	10.00	10.083	0.000	0.423
-GRASS	0.350	0.120					
G 56	0.350	0.130	10.00	10.00	10.083	0.000	0.459
-GRASS	0.350	0.130					
G 57	0.828	1.840	10.00	10.00	10.083	0.000	15.366
-PAVEMENT	0.900	1.600					
-GRASS	0.350	0.240					
G 58	0.611	1.330	10.00	10.00	10.083	0.000	8.187
-PAVEMENT	0.900	0.630					
-GRASS	0.350	0.700					
G 59	0.650	59.490	29.44	29.44	5.887	0.000	227.628
-FUTURE DEVELOPMENT	0.650	59.490					
G 60	0.350	0.480	10.00	10.00	10.083	0.000	1.694
-GRASS	0.350	0.480					
G 61	0.746	0.930	10.00	10.00	10.083	0.000	6.998
-PAVEMENT	0.900	0.670					
-GRASS	0.350	0.260					
G 62	0.625	1.120	10.00	10.00	10.083	0.000	7.058
-PAVEMENT	0.900	0.560					
-GRASS	0.350	0.560					
G 63	0.569	1.580	10.00	10.00	10.083	0.000	9.070
-PAVEMENT	0.900	0.630					
-GRASS	0.350	0.950					
G 64	0.870	0.370	10.00	10.00	10.083	0.000	3.247
-PAVEMENT	0.900	0.350					
-GRASS	0.350	0.020					
G 65	0.900	0.090	10.00	10.00	10.083	0.000	0.817
-PAVEMENT	0.900	0.090					
G 66	0.488	0.480	10.00	10.00	10.083	0.000	2.359
-PAVEMENT	0.900	0.120					
-GRASS	0.350	0.360					
G 67	0.671	0.600	10.00	10.00	10.083	0.000	4.058
-PAVEMENT	0.900	0.350					
-GRASS	0.350	0.250					
G 68	0.607	0.470	10.00	10.00	10.083	0.000	2.879
-PAVEMENT	0.900	0.220					
-GRASS	0.350	0.250					
G 69	0.900	0.680	10.00	10.00	10.083	0.000	6.171
-PAVEMENT	0.900	0.680					
G 70	0.523	0.920	10.00	10.00	10.083	0.000	4.855
-PAVEMENT	0.900	0.290					
-GRASS	0.350	0.630					
G 71	0.350	0.230	10.00	10.00	10.083	0.000	0.812
-GRASS	0.350	0.230					
G 72	0.900	0.090	10.00	10.00	10.083	0.000	0.817
-PAVEMENT	0.900	0.090					
G 73	0.556	0.800	10.00	10.00	10.083	0.000	4.487
-PAVEMENT	0.900	0.300					
-GRASS	0.350	0.500					
G 74	0.813	1.640	10.00	10.00	10.083	0.000	13.446
-PAVEMENT	0.900	1.070					
-FUTURE DEVELOPMENT	0.650	0.570					
G 75	0.618	0.800	10.00	10.00	10.083	0.000	4.986
-PAVEMENT	0.900	0.390					
-GRASS	0.350	0.410					
G 76	0.900	0.390	10.00	10.00	10.083	0.000	3.539
-PAVEMENT	0.900	0.390					
G 77	0.900	0.090	10.00	10.00	10.083	0.000	0.817
-PAVEMENT	0.900	0.090					
G 78	0.772	2.070	10.00	10.00	10.083	0.000	16.123
-PAVEMENT	0.900	1.590					
-GRASS	0.350	0.480					
G 79	0.606	0.730	10.00	10.00	10.083	0.000	4.462
-PAVEMENT	0.900	0.340					
-GRASS	0.350	0.390					
G 80	0.688	0.520	10.00	10.00	10.083	0.000	3.610
-PAVEMENT	0.900	0.320					
-GRASS	0.350	0.200					
G 81	0.672	1.450	10.00	10.00	10.083	0.000	9.831
-PAVEMENT	0.900	0.850					
-GRASS	0.350	0.600					
G 82	0.717	0.480	10.00	10.00	10.083	0.000	3.469
-PAVEMENT	0.900	0.320					
-GRASS	0.350	0.160					
G 84	0.598	0.600	10.00	10.00	10.083	0.000	3.615
-PAVEMENT	0.900	0.270					
-GRASS	0.350	0.330					
G 85	0.514	0.570	10.00	10.00	10.083	0.000	2.954
-PAVEMENT	0.900	0.170					
-GRASS	0.350	0.400					
G 89	0.350	0.510	10.00	10.00	10.083	0.000	1.800
-GRASS	0.350	0.510					
G 90	0.722	2.560	10.00	10.00	10.083	0.000	18.628
-PAVEMENT	0.900	1.730					
-GRASS	0.350	0.830					
G 91	0.747	0.860	10.00	10.00	10.083	0.000	6.473
-PAVEMENT	0.900	0.620					
-GRASS	0.350	0.240					

Runoff Computations

I.D.	C Value	Area (acres)	Tc (min)	Tc Used (min)	Intensity (in/hr)	Supply Q (cfs)	Total Q (cfs)
G 92	0.643	0.470	10.00	10.00	10.083	0.000	3.045
-PAVEMENT	0.900	0.250					
-GRASS	0.350	0.220					
G 93	0.883	1.600	10.00	10.00	10.083	0.000	14.242
-PAVEMENT	0.900	1.550					
-GRASS	0.350	0.050					
G 94	0.698	0.980	10.00	10.00	10.083	0.000	6.897
-PAVEMENT	0.900	0.620					
-GRASS	0.350	0.360					
G 95	0.900	0.350	10.00	10.00	10.083	0.000	3.176
-PAVEMENT	0.900	0.350					
G 96	0.900	0.790	10.00	10.00	10.083	0.000	7.169
-PAVEMENT	0.900	0.790					
G 97	0.753	0.970	10.00	10.00	10.083	0.000	7.361
-PAVEMENT	0.900	0.710					
-GRASS	0.350	0.260					
G 98	0.350	0.300	10.00	10.00	10.083	0.000	1.059
-GRASS	0.350	0.300					
G 99	0.542	1.430	10.00	10.00	10.083	0.000	7.819
-PAVEMENT	0.900	0.500					
-GRASS	0.350	0.930					
G 100	0.350	0.120	10.00	10.00	10.083	0.000	0.423
-GRASS	0.350	0.120					
G 101	0.350	0.120	10.00	10.00	10.083	0.000	0.423
-GRASS	0.350	0.120					
G 104	0.577	1.310	10.00	10.00	10.083	0.000	7.618
-PAVEMENT	0.900	0.540					
-GRASS	0.350	0.770					
G 105	0.650	1.190	10.00	10.00	10.083	0.000	7.804
-PAVEMENT	0.900	0.650					
-GRASS	0.350	0.540					
G 106	0.682	0.580	5.00	10.00	10.083	0.000	3.988
-PAVEMENT	0.900	0.350					
-GRASS	0.350	0.230					
G 107	0.680	0.600	5.00	10.00	10.083	0.000	4.114
-PAVEMENT	0.900	0.360					
-GRASS	0.350	0.240					
G 108	0.548	1.000	10.00	10.00	10.083	0.000	5.525
-PAVEMENT	0.900	0.360					
-GRASS	0.350	0.640					
G 109	0.694	1.310	10.00	10.00	10.083	0.000	9.170
-PAVEMENT	0.900	0.820					
-GRASS	0.350	0.490					
G 110	0.644	0.430	10.00	10.00	10.083	0.000	2.793
-PAVEMENT	0.900	0.230					
-GRASS	0.350	0.200					
G 111	0.711	3.430	10.00	10.00	10.083	0.000	24.582
-PAVEMENT	0.900	2.250					
-GRASS	0.350	1.180					
G 112	0.700	0.550	10.00	10.00	10.083	0.000	3.882
-PAVEMENT	0.900	0.350					
-GRASS	0.350	0.200					
G 114	0.900	1.530	10.00	10.00	10.083	0.000	13.884
-PAVEMENT	0.900	1.530					
G 115	0.350	0.250	10.00	10.00	10.083	0.000	0.882
-GRASS	0.350	0.250					
G 117	0.350	0.250	10.00	10.00	10.083	0.000	0.882
-GRASS	0.350	0.250					
G 118	0.350	0.060	10.00	10.00	10.083	0.000	0.212
-GRASS	0.350	0.060					
G 120	0.350	0.580	10.00	10.00	10.083	0.000	2.047
-GRASS	0.350	0.580					

STATE OF TEXAS
RUDY L. GOMEZ
58664
REGISTERED PROFESSIONAL ENGINEER

The seal appearing on this document was authorized by Rudy L. Gomez P.E. 58664, on September 30, 1999.

DATE	BY	REV	REVISION
6-3-99	RG	1	HYDRAULIC DATA
6-16-99	RG	2	HYDRAULIC DATA
9-30-99	RG	3	HYDRAULIC DATA

© 1999 Texas Department of Transportation

Brown & Root
HOUSTON, TEXAS

LOOP 20

HYDRAULIC DATA SUMMARY
SYSTEM G

SHEET 1 OF 15

FED RD DIV NO	STATE PROJECT NO	SHEET NO
6	C86-14-23	402

STATE	STATE DIST NO	COUNTY
TEXAS	22	WEBB

CONT	SECT	JOB	HIGHWAY NO
0086	14	023	LOOP 20

REF FILE(S): J01LOX01.BDR. BDR LV ON = 16.45.46.57.60-62

D13WSX08.DGN-06 09-30-99 BAR_HO_ES05 \HCIVIL\CF0039\PHASE2