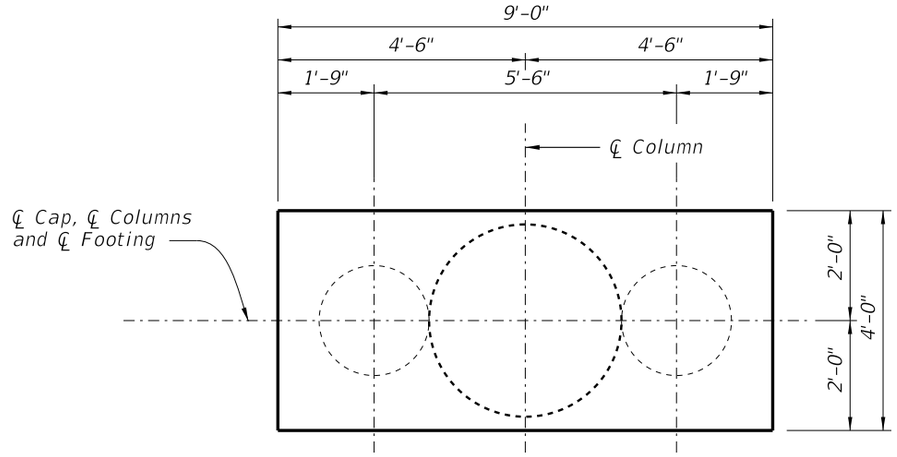

PLAN

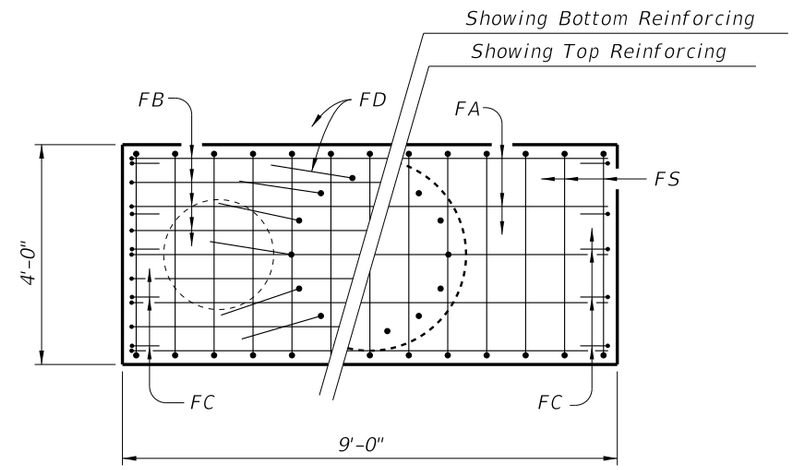

PLAN ~ SHOWING REINFORCING

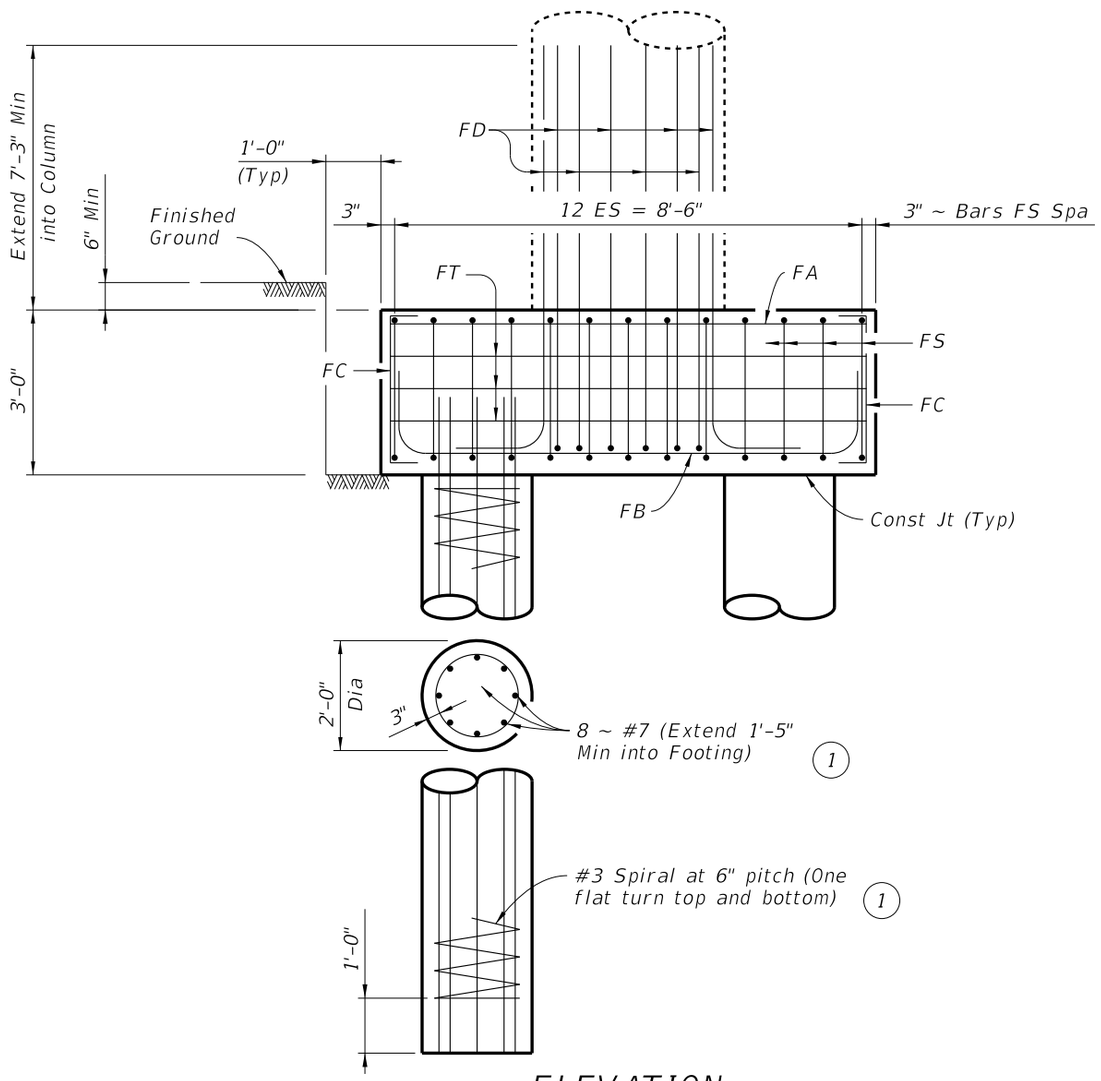

ELEVATION

1 Included in Price Bid for Drilled Shafts

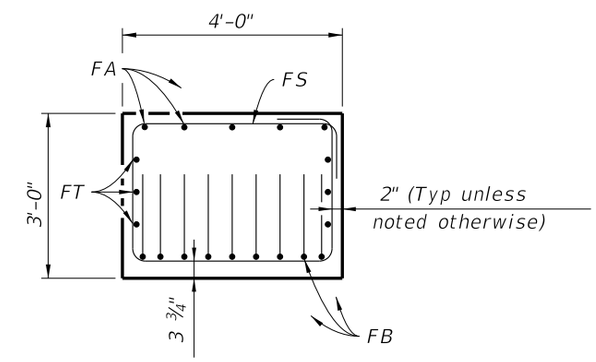

SECTION

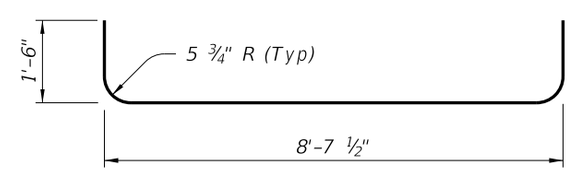

BARS FB

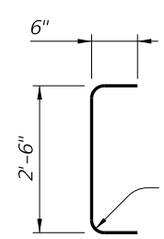

BARS FC

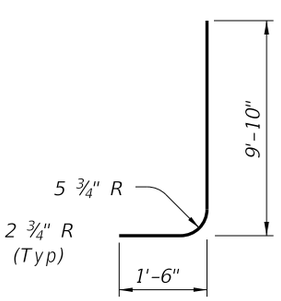

BARS FD

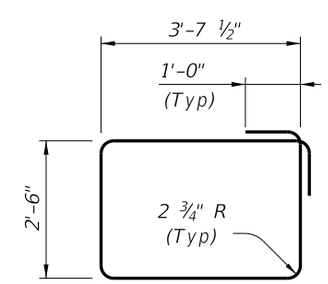

BARS FS