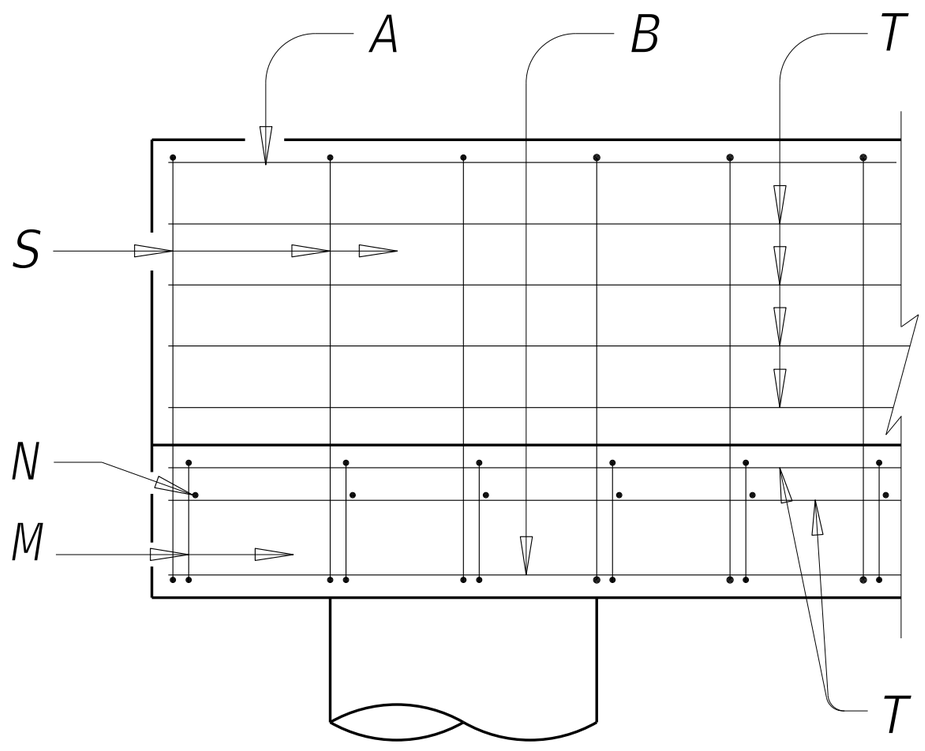

Elevation View

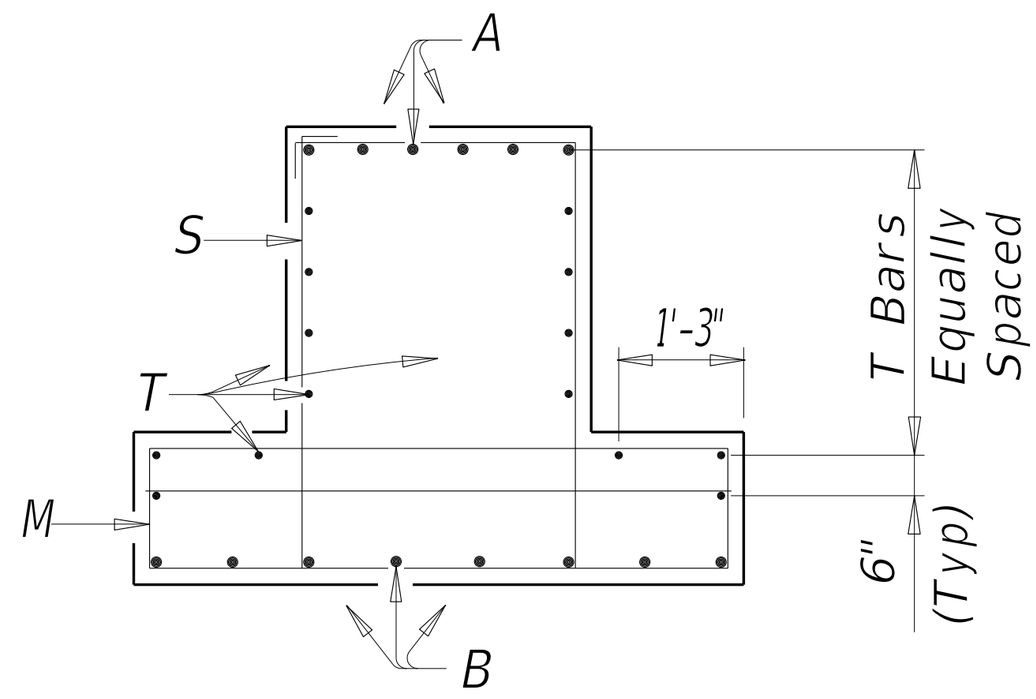

Section View of Cap