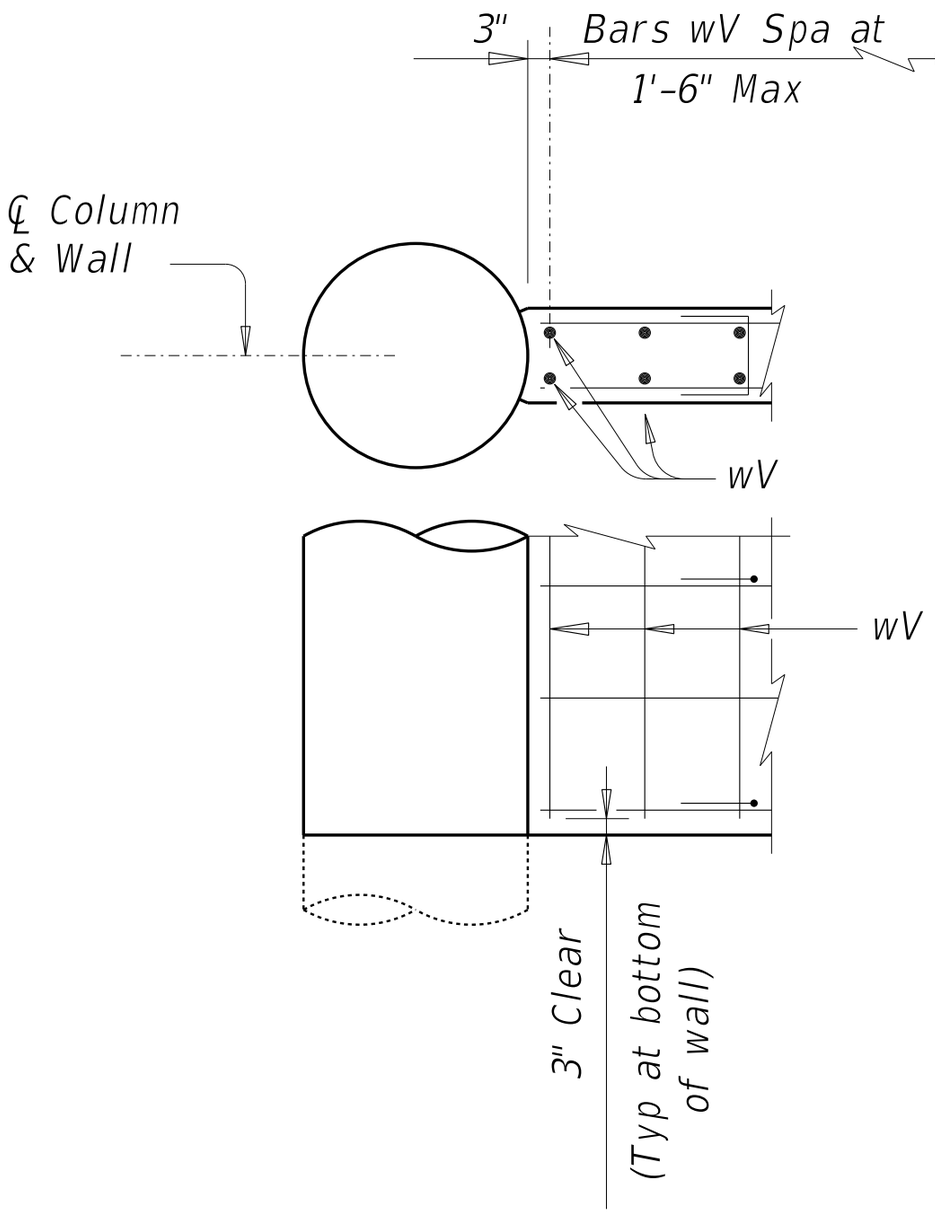

Typical Web Wall Detail
Showing Bars wV

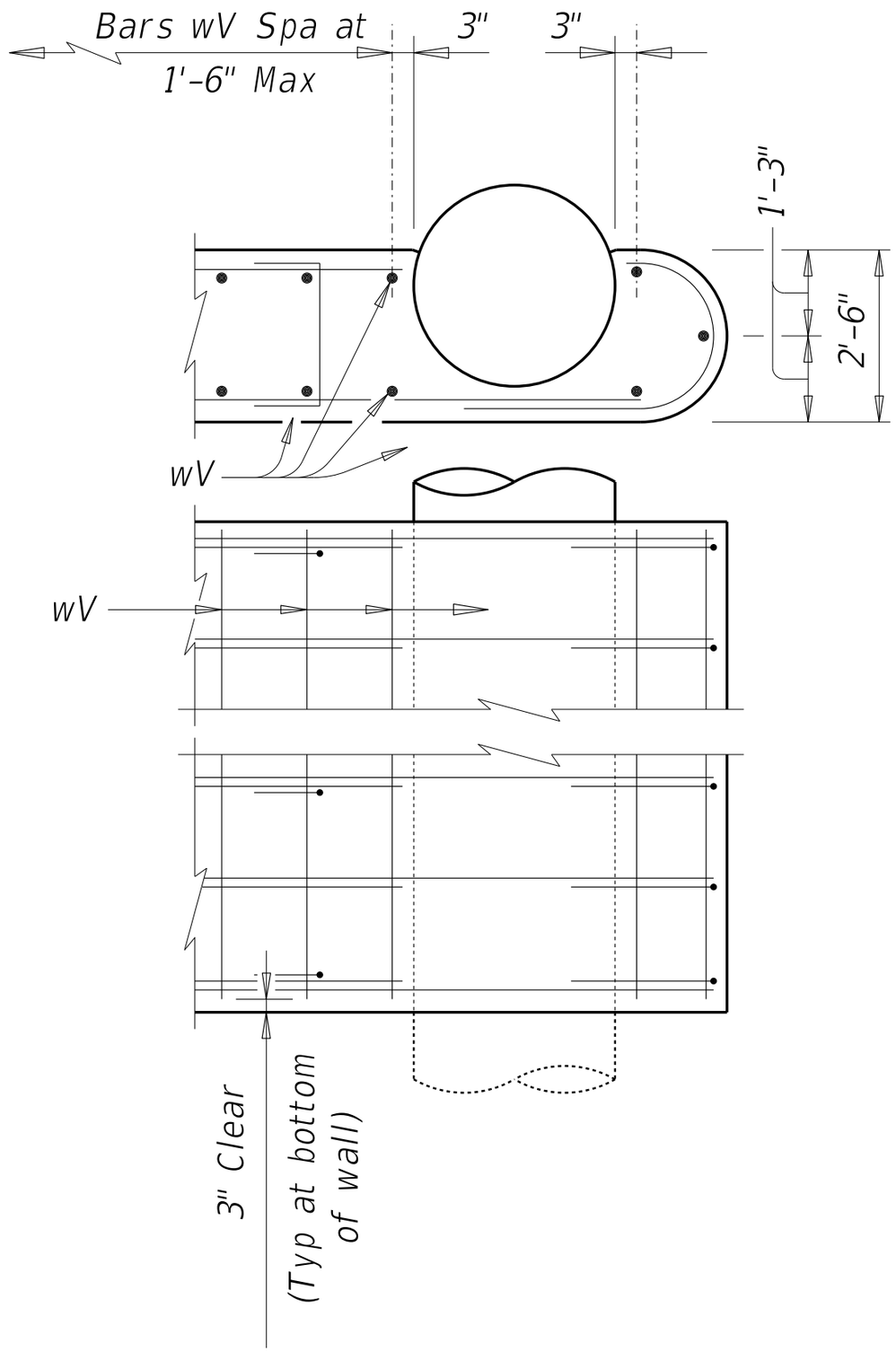

Typical Crash Wall Detail
Showing Bars wV