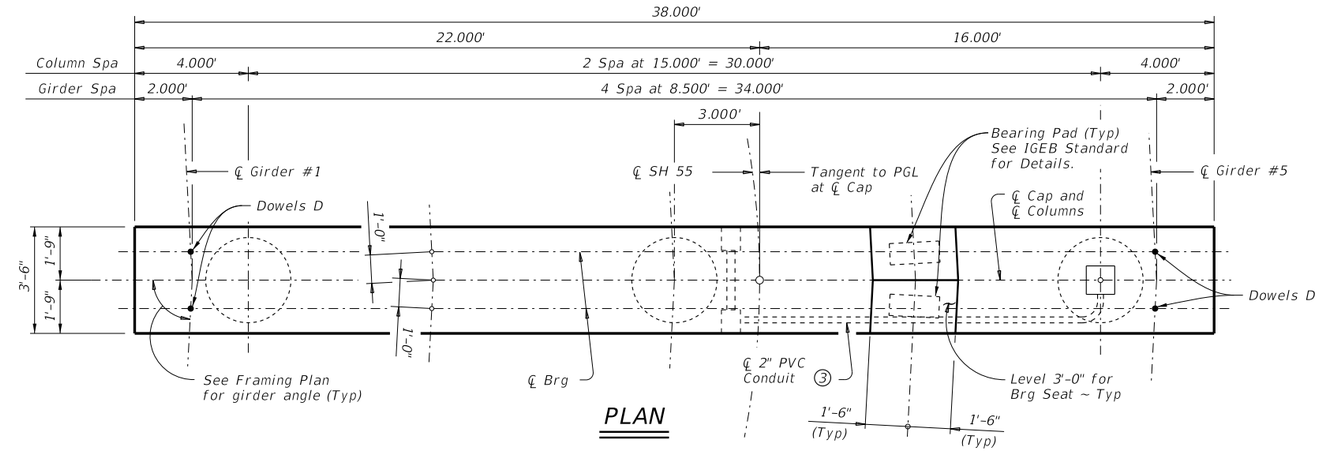

PLAN

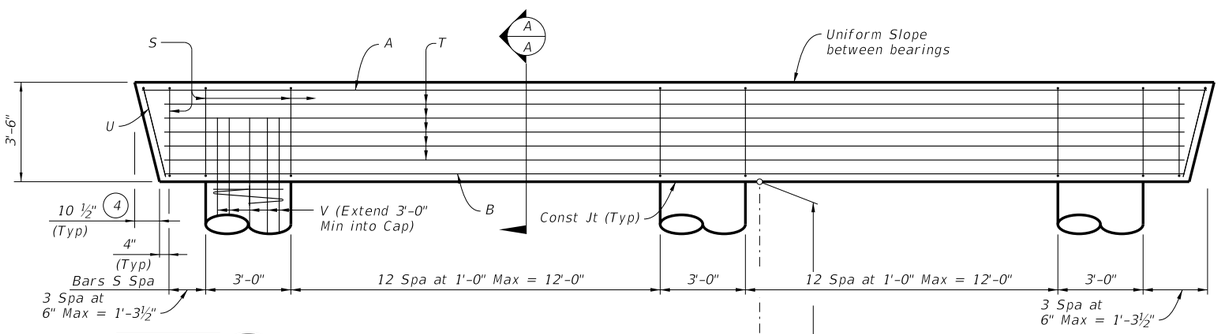

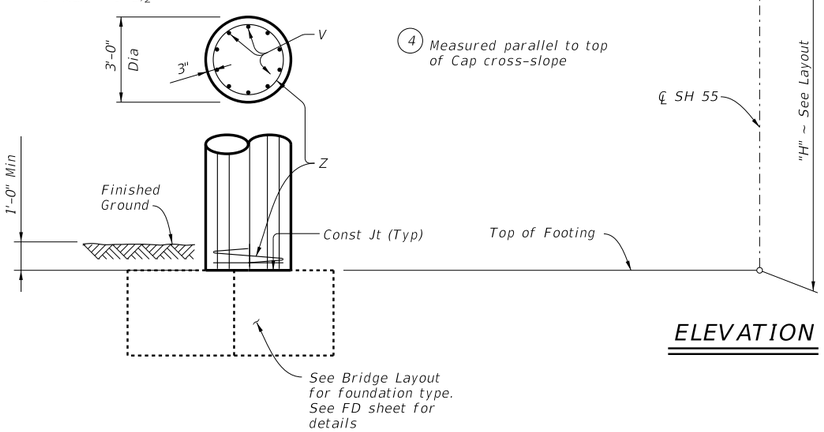

ELEVATION

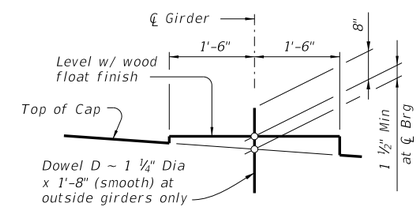

BEARING SEAT DETAIL

(Bearing surface must be clean and free of all loose material before placing bearing pad)

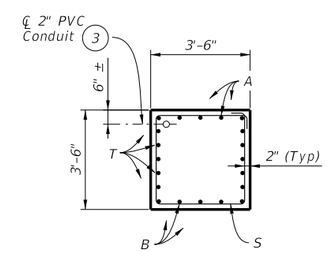

SECTION A-A

(3) See "UNDERPASS ILLUMINATION PLAN LAYOUT" sheet for additional details. Conduit shall be placed inside the Cap reinforcing cage between Bars A and Bars T. See SECTION A-A

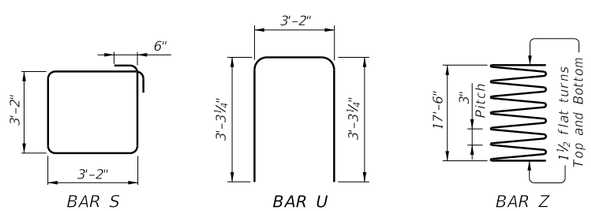

TABLE OF CAP QUANTITIES (1)

Bar	No.	Size	Length	Weight
A	5	#11	37'-6"	996
B	5	#11	35'-11"	954
D	4	1¼"D	1'-8"	28
S	36	#5	13'-8"	513
T	10	#5	35'-11"	375
U	2	#5	9'-9"	20
Reinforcing Steel			Lb	2886
Cl C Conc (Cap)			CY	17.2

TABLE OF COLUMN QUANTITIES (2)

Bent	"H"	Bars V 30 ~ #9		Bars Z 3 ~ #4		Reinf Steel	Class "C" Conc
No.	Height	Length	Weight	Length	Weight	Lb	CY
2	16'	18'-0"	2938	208'-6"	418	3356	16.4
3	15'	17'-0"	1734	177'-0"	356	2090	15.7

(1) Quantities shown are for one bent only.

(2) For each linear foot of variation in "H" value, make the following adjustments:
Bars V length, 1'-0"
Bars Z length, 31.480'
Reinforcing Steel, 220 Lb
Cl C Conc (Column) by 0.8 CY per bent.

GENERAL NOTES:

Designed according to AASHTO LRFD Bridge Design Specifications, 7th Edition (2015)

Cover dimensions are clear dimensions, unless shown otherwise
Reinforcing bar dimensions shown are out-to-out of bar

See Common Foundation Details (FD) standard sheet for all foundation details and notes not shown
Calculated Foundation Loads:
Bent 2 = 75 tons/ Dr Sh
Bent 3 = 75 tons/ Dr Sh

MATERIAL NOTES:

Provide Class C Concrete (f'c = 3600 psi).
Provide Grade 60 reinforcing steel.

HL93 LOADING

Texas Department of Transportation — Bridge Division

INTERIOR BENT NO. 2 OR 3

SH 55 OVERPASS AT BUDDY DRIVE

FILE:	DN:	CK:	DW:	CK:
©TxDOT	CONT	SECT	JOB	HIGHWAY
REVISIONS				
	DIST	COUNTY		SHEET NO.

DATE:
FILE: