FED.RD. DIV.NO.	PROJECT NO.	SHEET NO.
6	C 683-6-27	3-10A

STATE	STATE DIST.	COUNTY	
TEXAS	AUSTIN	WILLIAMSON	
CONT.	SECT.	JOB	HIGHWAY NO.
0683	06	027	LOOP 1/SH 45

STATE OF TEXAS
DEPARTMENT OF TRANSPORTATION
TEXAS TURNPIKE AUTHORITY

PLANS OF PROPOSED
STATE HIGHWAY IMPROVEMENT

PROJECT NUMBER
C 683-6-27

WILLIAMSON COUNTY
SH 45 / O'CONNOR DRIVE

CSJ: 0683 - 06 - 027

NET LENGTH OF PROJECT=6,626.41 FT=1.255 MI

LIMITS: FROM 0.62 MILES WEST OF RATTAN CREEK TO McNEIL ROAD

DESCRIPTION: FOR CONSTRUCTION OF AN INTERCHANGE, FRONTAGE ROADS, AND RAMPS CONSISTING OF GRADING, BASE, STRUCTURES, ASPHALT CONCRETE PAVING, DRAINAGE, SW3P, SIGNING, PAVEMENT MARKING, SIGNALIZATION, AND ILLUMINATION.

ROADWAY	5,156.41 FT=0.977 MI
BRIDGE	1,470.00 FT=0.278 MI
TOTAL	6,626.41 FT=1.255 MI

DESIGN SPEED	CLASSIFICATION	
MAINLANES	URBAN FREEWAY	70 MPH
FRONTAGE ROADS	URBAN ARTERIAL	40 MPH
RAMPS		50 MPH
O'CONNOR DR.	RURAL COLLECTOR	40 MPH
DIRECT CONNECTORS		50 MPH
U-TURN		15 MPH

ADT: (2040)	
MAINLANES	65,200
FRONTAGE ROADS	44,900
O'CONNOR	34,400

TDLR INSPECTION REQUIRED
TDLR No. EABPRJA

INDEX OF SHEETS

SHEET NO	DESCRIPTION

SEE INDEX ON SHEET 2

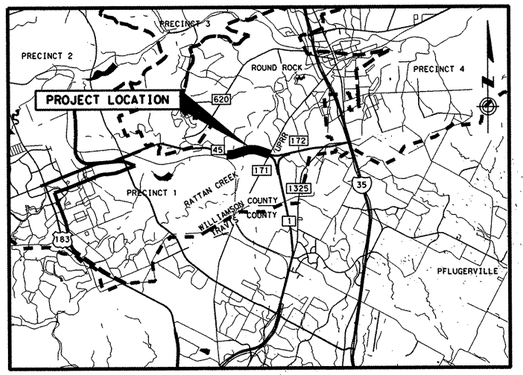

VICINITY MAP
NTS

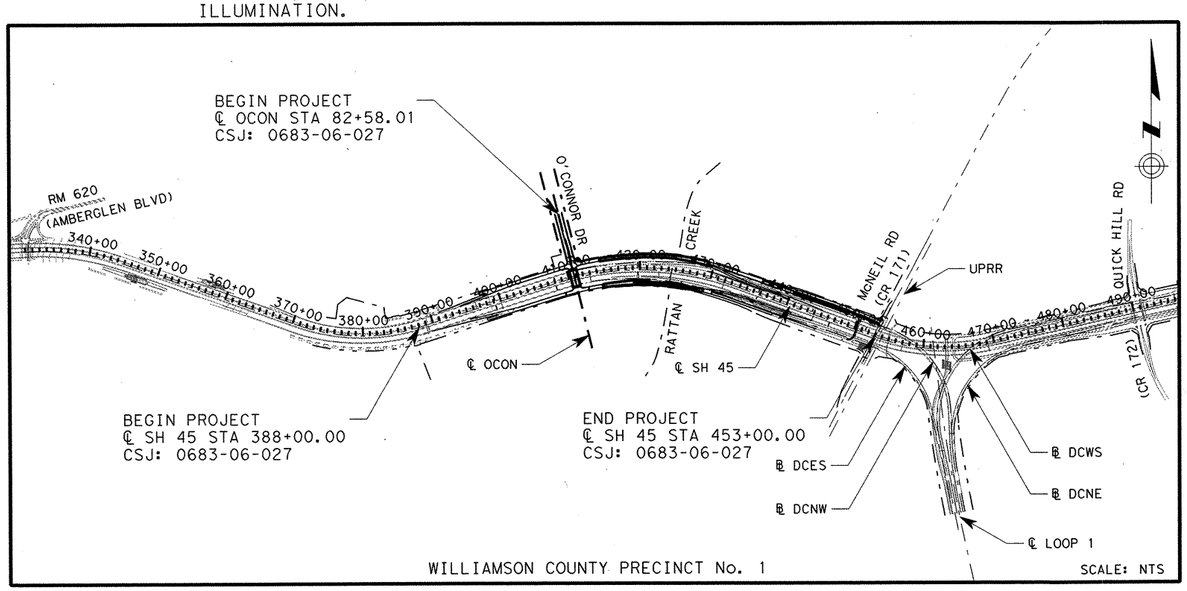

WILLIAMSON COUNTY PRECINCT No. 1 SCALE: NTS

FINAL PLANS

DATE CONTRACTOR BEGAN WORK: _____
DATE WORK WAS COMPLETED & ACCEPTED: _____
FINAL CONTRACT COST: _____

VOLUME II

100% SUBMITTAL

STATE OF TEXAS
CLINTON LUCAS RAY
87874
LICENSED
PROFESSIONAL ENGINEER

PREPARED BY:

PBSJ TBPE REG. # F-474
an Atkins company
6504 BRIDGE POINT PARKWAY, SUITE 200
AUSTIN, TEXAS 78703

Clinton L. Ray 4/18 2011
PROJECT MANAGER DATE

EXCEPTIONS: NONE
EQUATIONS: ℄ SH 45 STA 433+33.42 BK = STA 432+07.01 AH
℄ EBFR STA 431+97.08 BK = 432+20.42 AH
℄ OCON STA 82+74.83 BK = STA 82+58.01 AH
RAILROADS: NONE

RECOMMENDED FOR LETTING:
TEXAS DEPARTMENT OF TRANSPORTATION
for R.L. Stuard PE 5-3 2011
DISTRICT ENGINEER DATE

RECOMMENDED FOR LETTING:
TEXAS DEPARTMENT OF TRANSPORTATION
P.E. 4-21 2011
AREA ENGINEER DATE

APPROVED FOR LETTING:
TEXAS DEPARTMENT OF TRANSPORTATION
_____ 20__
DIRECTOR
TEXAS TURNPIKE AUTHORITY DIVISION
DATE

SUBMITTED FOR LETTING:
TEXAS DEPARTMENT OF TRANSPORTATION
P.E. 5/2 2011
DISTRICT DESIGN ENGINEER DATE

APPROVED FOR LETTING:
TEXAS DEPARTMENT OF TRANSPORTATION
P.E. 6/6 2011
for DIRECTOR
DESIGN DIVISION DATE

SPECIFICATIONS ADOPTED BY THE TEXAS DEPARTMENT OF TRANSPORTATION, JUNE 1, 2004 AND SPECIFICATION ITEMS LISTED AND DATED AS FOLLOWS, SHALL GOVERN ON THIS PROJECT: SPECIAL LABOR PROVISIONS FOR STATE PROJECTS (000---007)

© 2011 by Texas Department of Transportation
All Rights Reserved

COUNTY _____ PROJ. NO. _____
HWY. NO. _____ LETTING DATE _____
DATE ACCEPTED _____

PLOT DRIVER: RD*11x17*PDF.plt
PEN TABLE: plotord*ocon.tbl
FILE: R:\Trans-Design\O'Connor\CADD\GEN\OC451L02.dgn
DATE: 4/15/2011 TIME: 11:38:02 AM

VOLUME I

GENERAL

1	TITLE SHEET
2 - 4	INDEX OF SHEETS
5, 5A - 5W	GENERAL NOTES
6, 6A - 6F	QUANTITIES AND ESTIMATE
7	PROJECT LAYOUT AND BENCHMARK LOCATION MAP
8	HORIZONTAL AND VERTICAL CONTROL
9	EXISTING TYPICAL SECTIONS
10 - 15	TYPICAL SECTIONS

QUANTITIES

16	SUMMARY OF TRAFFIC CONTROL QUANTITIES
17 - 18	SUMMARY OF ROADWAY QUANTITIES
19	SUMMARY OF REMOVAL QUANTITIES
20	SUMMARY OF EARTHWORK QUANTITIES
21	SUMMARY OF RETAINING WALL QUANTITIES
22	SUMMARY OF DRAINAGE QUANTITIES
23	SUMMARY OF TRAFFIC SIGNAL QUANTITIES
24	SUMMARY OF ILLUMINATION QUANTITIES
25 - 28	SUMMARY OF SMALL SIGNS
29 - 30	SUMMARY OF LARGE SIGNS
31	SUMMARY OF SIGNING QUANTITIES
32	SUMMARY OF PAVEMENT MARKING QUANTITIES
33	SUMMARY OF TRAFFIC MANAGEMENT SYSTEM QUANTITIES
34	SUMMARY OF EROSION CONTROL QUANTITIES
35	SUMMARY OF WATER QUALITY QUANTITIES

TRAFFIC CONTROL PLAN

36 - 38	TRAFFIC CONTROL PLAN SEQUENCE OF CONSTRUCTION
39 - 41	TRAFFIC CONTROL PLAN OVERVIEW
42	TRAFFIC CONTROL PLAN ADVANCE WARNING SIGNS
43	TRAFFIC CONTROL PLAN PHASE I STEP 1 MCNEIL ROAD
44 - 50	TRAFFIC CONTROL PLAN PHASE I STEP 2 SH 45
51	TRAFFIC CONTROL PLAN PHASE I STEP 2 MCNEIL ROAD
52	TRAFFIC CONTROL PLAN PHASE I STEP 2 O'CONNOR DRIVE
53	TRAFFIC CONTROL PLAN PHASE I STEP 3 SH 45
54	TRAFFIC CONTROL PLAN PHASE I STEP 3 MCNEIL ROAD
55 - 61	TRAFFIC CONTROL PLAN PHASE I STEP 4 SH 45
62	TRAFFIC CONTROL PLAN PHASE I STEP 4 MCNEIL ROAD
63 - 68	TRAFFIC CONTROL PLAN PHASE II STEP 1 SH 45
69	TRAFFIC CONTROL PLAN PHASE III STEP 1 SH 45
70 - 75	TRAFFIC CONTROL PLAN PHASE III STEP 2 SH 45

TRAFFIC CONTROL STANDARDS

76	BARRICADE & CONSTRUCTION GENERAL NOTES AND REQUIREMENTS	BC (1)-07
77	BARRICADE & CONSTRUCTION PROJECT LIMIT STANDARD	BC (2)-07
78	BARRICADE & CONSTRUCTION WORK ZONE SPEED LIMIT STANDARD	BC (3)-07
79	BARRICADE & CONSTRUCTION TEMPORARY SIGN NOTES STANDARD	BC (4)-07
80	BARRICADE & CONSTRUCTION TYPICAL SIGN SUPPORT STANDARD	BC (5)-07
81	BARRICADE & CONSTRUCTION PORTABLE CHANGEABLE MESSAGE SIGN (PCMS) STANDARD	BC (6)-07
82	BARRICADE & CONSTRUCTION ARROW PANEL, REFLECTORS, WARNING LIGHTS & ATTENUATOR STANDARD	BC (7)-07
83	BARRICADE & CONSTRUCTION CHANNELIZING DEVICES STANDARD	BC (8)-07
84	BARRICADE & CONSTRUCTION CHANNELIZING DEVICES STANDARD	BC (9)-07
85	BARRICADE & CONSTRUCTION CHANNELIZING DEVICES STANDARD	BC (10)-07
86	BARRICADE & CONSTRUCTION PAVEMENT MARKINGS STANDARD	BC (11)-07
87	BARRICADE & CONSTRUCTION PAVEMENT MARKING PATTERNS STANDARD	BC (12)-07
88	TRAFFIC CONTROL PLAN TYPICAL DETAILS	WZ (TD)-03
89	WORK ZONE SHORT TERM PAVEMENT MARKINGS	WZ (STPM)-03
90	SIGNING FOR UNEVEN LANES	WZ (UL)-03
91	WORK ZONE DEAD END ROADWAY DETAILS	WZ (DERD)-03
92 - 93	TRAFFIC SIGNAL INSTALLATION	WZ (BTS-1 & 2)-03
94-OMITTED	~~WORK ZONE "GIVE US A BRAKE" SIGNS~~	~~WZ (BRK) 03~~
95	TRAFFIC CONTROL PLAN	TCP (1-1)-98
96	TRAFFIC CONTROL PLAN	TCP (1-4)-98
97	TRAFFIC CONTROL PLAN	TCP (2-1)-98
98	TRAFFIC CONTROL PLAN	TCP (2-4)-03
99	TRAFFIC CONTROL PLAN	TCP (2-5)-03
100	TRAFFIC CONTROL PLAN	TCP (2-6)-98
101	TRAFFIC CONTROL PLAN MOBILE OPERATIONS UNDIVIDED HIGHWAYS	TCP (3-1)-98
102	TRAFFIC CONTROL PLAN MOBILE OPERATIONS DIVIDED HIGHWAYS	TCP (3-2)-98
103	TRAFFIC CONTROL PLAN MOBILE OPERATIONS RAISED PAVEMENT MARKER INSTALLATION	TCP (3-3)-98
104	TRAFFIC CONTROL PLAN FREEWAY LANE CLOSURE	TCP (6-1)-98A
105	TRAFFIC CONTROL PLAN WORK AREA NEAR RAMP	TCP (6-2)-98A
106 - 109	TRAFFIC CONTROL PLAN	TCP (6-3)-(6-6)-98A
110	TRAFFIC CONTROL PLAN FREEWAY CLOSURE	TCP (6-7)-98A
111	TRAFFIC CONTROL PLAN FREEWAY (DAYTIME ONLY) CLOSURE SEQUENCE	TCP (6-8)-98
112	TRAFFIC CONTROL DETAILS FOR SURFACING OPERATIONS	TCP (7-1)-98
113 - 115	PRECAST CONCRETE TRAFFIC BARRIER TYPE 2	PCTB (1) THRU (3)-04
116	CONCRETE BARRIER RAIL (PORTABLE AND PRECAST)	CBR (P&P)-04
117 - 118	LOW PROFILE CONCRETE BARRIER	LPCB-10

ROADWAY

119	HORIZONTAL ALIGNMENT DATA SH 45
120	HORIZONTAL ALIGNMENT DATA FRONTAGE ROADS
121 - 122	HORIZONTAL ALIGNMENT DATA DATA RAMPS
123	HORIZONTAL ALIGNMENT DATA EAST-SOUTH DC
124	HORIZONTAL ALIGNMENT DATA NORTH-WEST DC
125	HORIZONTAL ALIGNMENT DATA CROSS STREETS
126 - 130	EB FRONTAGE RD PLAN AND PROFILE
131 - 136	WB FRONTAGE RD PLAN AND PROFILE
137 - 138	RAMP 7 PLAN AND PROFILE
139 - 140	RAMP 8 PLAN AND PROFILE
141 - 142	RAMP 9 EAST PLAN AND PROFILE
143 - 145	RAMP 9 WEST PLAN AND PROFILE
146 - 147	RAMP EAST-SOUTH DC PLAN AND PROFILE
148 - 150	RAMP NORTH-WEST DC PLAN AND PROFILE
151 - 152	O'CONNOR DRIVE PLAN AND PROFILE
153	EAST-WEST U-TURN PLAN AND PROFILE
154 - 155	O'CONNOR DRIVE INTERSECTION LAYOUT
156	McNEIL ROAD INTERSECTION LAYOUT
157	McNEIL ROAD REMOVAL LAYOUT
158 - 164	SH 45 REMOVAL LAYOUT
165 - 167	MISCELLANEOUS ROADWAY DETAILS
168	McNEIL ROAD/ WB FRONTAGE ROAD GRADING LAYOUT
169	O'CONNOR DRIVE/ EB FRONTAGE ROAD GRADING LAYOUT
170	O'CONNOR DRIVE/ WB FRONTAGE ROAD GRADING LAYOUT
171	EAST-WEST U-TURN/ WB FRONTAGE RD GRADING LAYOUT
172 - 174	RAMP 7 GORE DETAILS
175 - 176	RAMP 9 EAST GORE DETAILS
177 - 178	RAMP NORTH-WEST DC GORE DETAILS
179 - 181	RAMP 8 GORE DETAILS
182 - 184	RAMP 9 WEST GORE DETAILS

ROADWAY STANDARDS

185	CONCRETE CURB AND CURB AND GUTTER	CCCG-10A
186	METAL BEAM GUARD FENCE	MBGF-09
187	METAL BEAM GUARD FENCE TRANSITION	MBGF(TR)-09
188	SINGLE GUARDRAIL TERMINAL (ET-2000 PLUS) (WOOD POST)	SGT(7)-10
189	SINGLE GUARDRAIL TERMINAL (SKT 350) (WOOD POST)	SGT(8)-09
190	BRIDGE APPROACH SLAB - ASPHALTIC CONCRETE PAVEMENT	BAS-A
191	BRIDGE APPROACH SLAB - CONCRETE PAVEMENT	BAS-C
192	CONCRETE PAVING DETAILS JOINT SEALS	JS-94
193	RIGHT-OF-WAY MARKER	M-10
194 - 197	PEDESTRIAN FACILITIES	PED-05
198	QUADGUARD II SYSTEM (NARROW)	QUAD (N)-10
199	QUADGUARD II SYSTEM (WIDE)	QUAD (W)-10
200 - 202	TRAFFIC RAIL	TYPE T80SS (MOD)
203	TRAFFIC RAIL FOUNDATION AND MISCELLANEOUS DETAILS	TRF (MOD)
204 - 205	SINGLE SLOPE CONCRETE BARRIER PRECAST (TYPE 1)	SSCB(2)-10
206	BARBED WIRE AND WOVEN WIRE FENCE (STEEL POSTS)	WF(2)-10
207	VEHICLE IMPACT ATTENUATOR (SAND FILLED PLASTIC MODULES)	VIA(SFPM)-10
208	CONCRETE DRIVEWAYS, SIDEWALKS AND RIPRAP MEDIANS	(AUSTIN DISTRICT)
209	CONCRETE RIPRAP FOR VEGETATION CONTROL	(AUSTIN DISTRICT)
210 - 212	CONTINUOUSLY REINFORCED CONCRETE PAVEMENT DETAILS	(AUSTIN DISTRICT)
	NOTE: SEE BRIDGE STANDARDS FOR T401 RAIL	

STATE OF TEXAS
CLINTON LUCAS RAY
87874
LICENSED
PROFESSIONAL ENGINEER

THE STANDARD SHEETS HAVE BEEN ISSUED BY ME OR UNDER MY RESPONSIBLE SUPERVISION AS BEING APPLICABLE TO THIS PROJECT.

Clinton L. Ray P.E.

DATE: 6/17/11

Rev. 6/29/11

REV. No.	DATE	REVISION	BY
△			
△			
△			

PBSJ
an Atkins company TBPE REG. # F-474

Texas Department of Transportation
Austin District
©2011 by TxDOT

SH 45 / O'CONNOR DRIVE
INDEX OF SHEETS

SCALE: NTS SHEET 1 OF 3

DESIGNED: DMH	FED. RD DIV. No.	STATE	PROJECT No.			HIGHWAY No.
CHECKED: JMS	6	TEXAS				LP 1/SH 45
DRAWN: DMH	STATE DISTRICT	COUNTY	CONTROL No.	SECTION No.	JOB No.	SHEET No.
CHECKED: JMS	AUSTIN	WILLIAMSON	0683	06	027	310B

DATE: 6/17/2011 TIME: 1:48:21 PM
PLOT DRIVER: RD*11x17*PDF.pl+
PEN TABLE: plotordr*ocon.tbl
FILE: r:\trans-design\o'connor\cadd\gen\0C45IN*vol2*01.dgn

RETAINING WALLS

213	RETAINING WALL LOCATION MAP	
214 - 215	RETAINING WALL LAYOUT WALL "01"	
216 - 217	RETAINING WALL LAYOUT WALL "02"	
218 - 219	RETAINING WALL LAYOUT WALL "03"	
220 - 221	RETAINING WALL LAYOUT WALL "04"	
222 - 224	RETAINING WALL LAYOUT WALL "05"	
225 - 227	RETAINING WALL LAYOUT WALL "06"	
228	RETAINING WALL LAYOUT WALL "07"	
229	RETAINING WALL LAYOUT WALL "08"	
230	RETAINING WALL LAYOUT WALL "09"	
231 - 232	RETAINING WALL LAYOUT WALL "10A" AND "10B"	
233	RETAINING WALL LAYOUT WALL "11"	
234	RETAINING WALL LAYOUT WALL "12"	
235	RETAINING WALL LAYOUT WALL "13"	
236	RETAINING WALL LAYOUT WALL "A"	
237	RETAINING WALL LAYOUT WALL "B"	
238	RETAINING WALL DETAILS	

RETAINING WALL STANDARDS

239	MECHANICALLY STABILIZED EARTH RETAINING WALL	RW(MSE)
240	RETAINING WALL TRAFFIC RAILING FOUNDATIONS	RW(TRF)
241	RETAINING WALL MISCELLANEOUS DETAILS	RW 2
242	EARTHWORK MEASUREMENT AT RETAINING WALLS	RW(EM)
243 - 245	COMBINATION RAIL TEXAS CLASSIC	TYPE C411
	NOTE: SEE BRIDGE STANDARDS FOR T401 AND C402 RAIL	

DRAINAGE

246	OVERALL DRAINAGE AREA MAP
247 - 254	DRAINAGE AREA MAP SH 45
255	DRAINAGE AREA MAP O'CONNOR DRIVE
256	HYDRAULIC DATA BRIDGE CLASS CULVERT 2
257	HYDRAULIC DATA RATTAN CREEK BRIDGE
258 - 263	HYDRAULIC DATA
264	O'CONNOR CULVERT 1 PLAN & PROFILE
265	BRIDGE CLASS CULVERT 2 PLAN & PROFILE
266 - 273	DRAINAGE PLAN SH 45
274	DRAINAGE PLAN O'CONNOR DRIVE
275 - 282	DRAINAGE PROFILE
283 - 289	DRAIN DETAILS
290 - 292	RATTAN CREEK
293	SPECIAL PROVISIONS FOR RIPRAP
294	MISCELLANEOUS DRAINAGE DETAILS JUNCTION BOX LAYOUT

DRAINAGE STANDARDS

295 - 296	CURB INLET DETAILS TY IR & IIR (FOR 36" DIA RCP & SMALLER)	(AUSTIN DISTRICT)
297 - 298	CURB INLET DETAILS TY IR & IIR (FOR 42" TO 60" DIA RCP)	(AUSTIN DISTRICT)
299	DROP INLET DETAILS TY I	(AUSTIN DISTRICT)
300	DROP INLET DETAILS TY AD & AAD	(AUSTIN DISTRICT)
301	MANHOLE TYPE M (JUNCTION BOX WITH ACCESS)	MH-M
302	MANHOLE TYPE A AND CAPPED INLET DETAILS	(AUSTIN DISTRICT)
303	SINGLE BOX CULVERTS PRECAST (4'-0" SPAN)	SCP-4
304	SINGLE BOX CULVERTS PRECAST (5'-0" SPAN)	SCP-5
305	SINGLE BOX CULVERTS PRECAST (8'-0" SPAN)	SCP-8
306	CONCRETE WINGWALLS WITH FLARED WINGS FOR 0 SKEW BOX CULVERTS	FW-0
307	SAFETY END TREATMENT (FOR 12" DIA TO 72" DIA PIPE CULVERTS)	SETP-PD
308 - 309	SAFETY END TREATMENT (FOR 0 SKEW BOX CULVERTS)	SETB-CD
310	EXTENDED CURB DETAILS	ECD

VOLUME II

GENERAL

310A	TITLE SHEET
310B - 310D	INDEX OF SHEETS

SOIL BORINGS

311 - 313	SOIL BORING LAYOUT
314 - 320	BORING LOGS

BRIDGE

321 - 322	O'CONNOR DRIVE BRIDGE LAYOUT
323	O'CONNOR DRIVE ESTIMATED QUANTITIES AND BEARING SEAT ELEVATIONS
324	O'CONNOR DRIVE FOUNDATION LAYOUT
325	O'CONNOR DRIVE FOUNDATION DETAILS
326 - 328	O'CONNOR DRIVE ABUTMENTS
329 - 330	O'CONNOR DRIVE BENT
331	O'CONNOR DRIVE I-GIRDER LAYOUT
332 - 333	O'CONNOR DRIVE PRESTRESSED CONCRETE I-GIRDER UNITS
334	O'CONNOR DRIVE PRESTRESSED CONCRETE I-GIRDER DESIGN (IGND)
335 - 338	EB FRONTAGE RD BRIDGE LAYOUT
339	EB FRONTAGE RD ESTIMATED QUANTITIES AND BEARING SEAT ELEVATIONS
340 - 341	EB FRONTAGE RD FOUNDATION LAYOUT
342 - 346	EB FRONTAGE RD FOUNDATION DETAILS
347 - 348	EB FRONTAGE RD ABUTMENTS
349 - 364	EB FRONTAGE RD BENTS

BRIDGE (CONT)

365 - 370	EB FRONTAGE RD I-GIRDER LAYOUT
371 - 376	EB FRONTAGE RD PRESTRESSED CONCRETE I-GIRDER UNITS
377	EB FRONTAGE RD PRESTRESSED CONCRETE I-GIRDER DESIGN (IGND)
378 - 379	RAMP EAST-SOUTH DC BRIDGE LAYOUT
380	RAMP EAST-SOUTH DC TYPICAL SECTION CONSTRUCTION STAGING
381	RAMP EAST-SOUTH DC ESTIMATED QUANTITIES AND BEARING SEAT ELEVATIONS
382	RAMP EAST-SOUTH DC FOUNDATION LAYOUT
383 - 385	RAMP EAST-SOUTH DC FOUNDATION DETAILS
386 - 405	RAMP EAST-SOUTH DC BENTS
406 - 408	RAMP EAST-SOUTH DC I-GIRDER LAYOUT
409 - 412	RAMP EAST-SOUTH DC PRESTRESSED CONCRETE I-GIRDER UNITS
413	RAMP EAST-SOUTH DC PRESTRESSED CONCRETE I-GIRDER DESIGN (IGND)
414 - 417	RAMP NORTH-WEST DC BRIDGE LAYOUT
418	RAMP NORTH-WEST DC TYPICAL SECTION CONSTRUCTION STAGING
419	RAMP NORTH-WEST DC ESTIMATED QUANTITIES AND BEARING SEAT ELEVATIONS
420 - 421	RAMP NORTH-WEST DC FOUNDATION LAYOUT
422 - 424	RAMP NORTH-WEST DC FOUNDATION DETAILS
425	RAMP NORTH-WEST DC ABUTMENT
426 - 437	RAMP NORTH-WEST DC BENTS
438 - 444	RAMP NORTH-WEST DC I-GIRDER LAYOUT
445 - 451	RAMP NORTH-WEST DC PRESTRESSED CONCRETE I-GIRDER UNITS
452	RAMP NORTH-WEST DC BEARING DETAILS
453	RAMP NORTH-WEST DC PRESTRESSED CONCRETE I-GIRDER DESIGN (IGND)
454 - 457	WB FRONTAGE RD BRIDGE LAYOUT
458	WB FRONTAGE RD ESTIMATED QUANTITIES AND BEARING SEAT ELEVATIONS
459 - 460	WB FRONTAGE RD FOUNDATION LAYOUT
461 - 462	WB FRONTAGE RD FOUNDATION DETAILS
463 - 464	WB FRONTAGE RD ABUTMENTS
465 - 473	WB FRONTAGE RD BENTS
474 - 479	WB FRONTAGE RD I-GIRDER LAYOUT
480 - 485	WB FRONTAGE RD PRESTRESSED CONCRETE I-GIRDER UNITS
486	WB FRONTAGE RD PRESTRESSED CONCRETE I-GIRDER DESIGN (IGND)

MISCELLANEOUS STRUCTURE

487 - 490	BRIDGE CLASS CULVERT 2 DETAILS
491 - 492	TRAFFIC SIGNAL POLE FOUNDATION ON RETAINING WALL DETAILS
493 - 497	CANTILEVER OVERHEAD SIGN SUPPORT "OC-2"
498 - 500	AESTHETIC TREATMENT REINFORCEMENT DETAILS
501 - 506	AESTHETIC DESIGN STANDARD- OVERHEAD SIGN SUPPORTS

STATE OF TEXAS
CLINTON LUCAS RAY
87874
LICENSED
PROFESSIONAL ENGINEER

THE STANDARD SHEETS HAVE BEEN ISSUED BY ME OR UNDER MY RESPONSIBLE SUPERVISION AS BEING APPLICABLE TO THIS PROJECT.

Clinton L. Ray P.E.

DATE: 6/17/11

REV. No.	DATE	REVISION	BY
△			
△			
△			

PBSJ an Atkins company TBPE REG. # F-474

Texas Department of Transportation
Austin District

©2011 by TxDOT

SH 45 / O'CONNOR DRIVE
INDEX OF SHEETS

SCALE: NTS SHEET 2 OF 3

DESIGNED: DMH	FED. RD. DIV. No.	STATE	PROJECT No.			HIGHWAY No.	
CHECKED: JMS	6	TEXAS				LP 1/SH 45	
DRAWN: DMH	STATE DISTRICT	COUNTY		CONTROL No.	SECTION No.	JOB No.	SHEET No.
CHECKED: JMS	AUSTIN	WILLIAMSON		0683	06	027	310C

Rev. 6/29/11

DATE: 6/17/2011 TIME: 1:48:23 PM
PLOT DRIVER: RD*11x17*PDF.plt
PEN TABLE: plotordr*ocon.tbl
FILE: r:\trans-design\o'connor\oadd\gen\OC451N*vol2*02.dgn

BRIDGE STANDARDS

507 - 508	BRIDGE MOUNTED CLEARANCE SIGN ASSEMBLY	BMCS
509	BRIDGE SIDEWALK EXPANSION JOINT COVER PLATE	BS-EJCP
510	CONCRETE RIPRAP AND SHOULDER DRAINS	CRR
511	CEMENT STABILIZED ABUTMENT BACKFILL	CSAB
512 - 513	COMMON FOUNDATION DETAILS	FD
514	CONTINUOUS SLAB DETAILS	IGCS
515 - 516	PRESTRESSED CONCRETE I-GIRDER DETAILS	IGD (MOD)
517 - 518, 518A	ELASTOMERIC BEARING AND GIRDER END DETAILS	IGEB
519	MISCELLANEOUS SLAB DETAILS	IGMS (MOD)
520	THICKENED SLAB END DETAILS	IGTS
521	MINIMUM ERECTION AND BRACING REQIREMENTS	MEBR(C)
522	OPTIONAL DRILLED SHAFT REINFORCING	ODSR
523 - 526	PRESTRESSED CONCRETE PANELS	PCP
526A	PRESTRESSED CONCRETE PANEL FABRICATION DETAILS	PCP-FAB
527 - 528	PERMANENT METAL DECK FORMS	PMDF
529	SEALED EXPANSION JOINT TYPE A	SEJ-A
530 - 532	TRAFFIC RAIL	TYPE T401
533 - 536	COMBINATION RAIL	TYPE C402
	NOTE: SEE ROADWAY STANDARDS FOR BRIDGE APPROACH SLAB STANDARDS	

TRAFFIC MANAGEMENT SYSTEM

537 - 543	TRAFFIC MANAGEMENT SYSTEM LAYOUT
543A - 543B	TRAFFIC MANAGEMENT SYSTEM DETAILS

TRAFFIC SIGNALS

544 - 545	TRAFFIC SIGNAL LAYOUT O'CONNOR DRIVE
546	WIRING DIAGRAM O'CONNOR DRIVE
547 - 548	TRAFFIC SIGNAL ELEVATIONS O'CONNOR DRIVE
549	TRAFFIC SIGNAL LAYOUT McNEIL ROAD

TRAFFIC SIGNAL & TRAFFIC MANAGEMENT STANDARDS

550	ELECTRICAL DETAILS - CONDUIT	ED (1)-03
551	ELECTRICAL DETAILS - CONDUCTORS	ED (2)-03
552	ELECTRICAL DETAILS - GROUND BOXES	ED (3)-03
553	ELECTRICAL DETAILS - SERVICE SCHEMATICS & SUPPORT - TYPE TP (OVERHEAD)	ED (4)-03
554	ELECTRICAL DETAILS - SERVICE ENCLOSURE & NOTES	ED (5)-03
555	ELECTRICAL DETAILS - SERVICE SUPPORT TYPES SF & SP	ED (6)-03
556	ELECTRICAL DETAILS - TYPICAL TRAFFIC SIGNAL SYSTEM DETAILS	ED (7)-03
557-OMITTED	~~ELECTRICAL DETAILS - ELECTRICAL SERVICE SUPPORT PEDESTAL SERVICE TYPE PS~~	~~ED (8)-03~~
558-OMITTED	~~ELECTRICAL DETAILS - SERVICE SUPPORT TYPES GC AND OC~~	~~ED (9)-03~~
559-OMITTED	~~ELECTRICAL DETAILS - DUCT CABLE~~	~~ED (10)-03~~
560	CONCRETE GROUND BOX (TYPE J) FOR TRAFFIC MANAGEMENT SYSTEMS	ED (11)-03
561-OMITTED	~~ELECTRICAL DETAILS - ELECTRICAL SERVICE SUPPORT TYPE RT (U)~~	~~ED (12)-03~~
562-OMITTED	~~ELECTRICAL DETAILS - GROUND BOXES / BATTERY BOX~~	~~ED (13)-03~~
563	LOOP DETECTOR PLACEMENT DETAILS	LD (2)-03
564	TRAFFIC SIGNAL SUPPORT STRUCTURES SINGLE MAST ARM ASSEMBLY (80 MPH WIND ZONE)	SMA-80 (1)-99
565	TRAFFIC SIGNAL SUPPORT STRUCTURES SINGLE MAST ARM ASSEMBLY (80 MPH WIND ZONE)	SMA-80 (2)-96
566	STANDARD ASSEMBLY FOR TRAFFIC SIGNAL SUPPORT STRUCTURES	MA-C-09
567	TRAFFIC SIGNAL SUPPORT STRUCTURES MAST ARM POLE DETAILS	MA-D-07
568	TRAFFIC SIGNAL POLE FOUNDATION	TS-FD-99
569	STANDARD ASSEMBLY DRAWINGS FOR LUMINAIRE SUPPORT STRUCTURES	LUM-A-99
570	CLAMP ON FITTING ASSEMBLY FOR LUMINAIRE MAST ARM	CFA-99
571	TRAFFIC SIGNAL CONTROLLER CABINET BASE AND PAD	TS-CF-04

ILLUMINATION

572 - 576	ILLUMINATION LAYOUT

ILLUMINATION STANDARDS

577 - 585	HIGH MAST ILLUMINATION DETAILS	HMID (1) THRU (9)-03
586 - 587	HIGH MAST ILLUMINATION POLES 100' - 125' - 150' - 175'	HMIP (1 & 2)-98
588 - 589	HIGH MAST ILLUMINATION POLE FOUNDATIONS	HMIF (1 & 2)-98

SIGNING

590 - 599	SIGNING LAYOUT SH 45
600	SIGNING LAYOUT O'CONNOR DRIVE
601 - 603	LARGE SIGN DETAILS
604 - 611	SIGN ELEVATIONS

SIGNING STANDARDS

612 - 616	TYPICAL SIGN REQUIREMENTS	TSR (1) THRU (5)-08
617	SIGN MOUNTING DETAILS SMALL ROADSIDE SIGNS GENERAL NOTES & DETAILS	SMD (GEN)-08
618	SIGN MOUNTING DETAILS SMALL ROADSIDE SIGNS TRAINGULAR SLIPBASE SYSTEM	SMD (SLIP-1)-08
619	SIGN MOUNTING DETAILS SMALL ROADSIDE SIGNS TRAINGULAR SLIPBASE SYSTEM	SMD (SLIP-2)-08
620	SIGN MOUNTING DETAILS SMALL ROADSIDE SIGNS TRAINGULAR SLIPBASE SYSTEM	SMD (SLIP-3)-08
621	SIGN MOUNTING DETAILS SMALL ROADSIDE SIGNS WEDGE & UNIVERSAL ANCHOR	SMD (TWT)-08
622	SIGN MOUNTING DETAILS SMALL ROADSIDE SIGNS UNIVERSAL ANCHOR SYSTEM	SMD (FRP)-08
623	SIGN MOUNTING DETAILS EXTRUDED ALUMINUM SIGN PANELS & HARDWARE	SMD (2-1)-08
624	SIGN MOUNTING DETAILS LARGE ROADSIDE SIGNS FOUNDATION & STUB	SMD (2-2)-08
625	SIGN MOUNTING DETAILS LARGE ROADSIDE SIGNS	SMD (2-3)-08
626	SIGN MOUNTING DETAILS OVERHEAD SIGNS EXTRUDED ALUMINUM	SMD (2-4)-08
627	SIGN MOUNTING DETAILS LARGE ROADSIDE SIGNS ELECTRICAL CONNECTION	SMD (2-6)-01
628	SIGN MOUNTING DETAILS, TYPE G SUPPORT	SMD (TY G)-08
629	WIND VELOCITY AND ICE ZONES	WV & IZ-96
630	LARGE ROADSIDE SIGN SUPPORTS POST SELECTION WORKSHEET	SMD(8W1)-08
631	LARGE ROADSIDE SIGN SUPPORTS FOUNDATION WORKSHEET	SMD(8W2)-08
632 - 633	HIGH LEVEL OVERHEAD SIGN BRIDGE DETAILS	HOSB-Z1L
634 - 635	OVERHEAD SIGN BRIDGE DETAILS	OSB-Z4

SIGNING STANDARDS (CONT.)

636 - 637	HIGH LEVEL OVERHEAD SIGN BRIDGE DETAILS	HOSB-Z4
638 - 639	OVERHEAD SIGN BRIDGE DETAILS	OSB-Z4I
640 - 641	HIGH LEVEL OVERHEAD SIGN BRIDGE DETAILS	HOSB-Z4I
642 - 643	OVERHEAD SIGN BRIDGE TOWER DETAILS	OSBT
644	OVERHEAD SIGN BRIDGE TRUSS DETAILS	OSBC
645 - 646	OVERHEAD SIGN BRIDGE TRUSS DETAILS SINGLE COLUMN	OSBC-SC-Z4
647	FOUNDATION EMBEDMENT SELECTION CHARTS	OSB-FD
648	FOUNDATION EMBEDMENT SELECTION CHARTS	OSB-FD-SC
649	OVERHEAD SIGN SUPPORT DETAILS	COSS & OSB-SZ Austin Dist.
650	CANTILEVER OVERHEAD SIGN SUPPORTS	COSS-Z4 & Z4I-10
651 - 652	CANTILEVER OVERHEAD SIGN SUPPORT DETAILS	COSSD
653	CANTILEVER OVERHEAD SIGN SUPPORT FOUNDATION	COSSF
654	FOUNDATION EMBEDMENT SELECTION CHARTS	COSS-FD
655 - 660	SPECIAL SIGN MOUNT DETAILS	

PAVEMENT MARKINGS

661 - 668	PAVEMENT MARKING LAYOUT SH 45
669	PAVEMENT MARKING LAYOUT O'CONNOR DRIVE

PAVEMENT MARKING STANDARDS

670	DELINEATOR & OBJECT MARKER INSTALLATION AND MATERIAL DESCRIPTION	D&OM (1)-10
671 - 674	DELINEATOR & OBJECT MARKER PLACEMENT DETAILS	D&OM (2) THRU (5)-04
675	DELINEATORS & OBJECT MARKERS FOR VEHICLE IMPACT ATTENUATORS	D&OM (VIA)-04
676	TYPICAL STANDARD PAVEMENT MARKINGS	PM (1)-03
677	POSITION GUIDANCE USING RAISED MARKERS REFLECTORIZED PROFILE MARKINGS	PM (2)-10
678	PMT MRKS FOR TWO-WAY LEFT TURN LANES, DIVIDED HIGHWAYS, & RURAL LEFT TURN BAYS	PM (4)-10
679	STANDARD PAVEMENT MARKINGS (WORDS)	PM (5)-01
680	STANDARD PAVEMENT MARKINGS (NARROW)	PM (6)-01
681	TYP. STD. FREEWAY PAVEMENT MARKINGS WITH RAISED PAVEMENT MARKERS	FPM (1)-10
682	TYP. STD. FREEWAY PAVEMENT MARKINGS ENTRANCE AND EXIT RAMPS	FPM (2)-10
683	TYP. STD. FREEWAY PAVEMENT MARKINGS LANE DROP (EXIT ONLY) EXIT RAMPS	FPM (3)-10
684	TYP. STD. FREEWAY PAVEMENT MARKINGS LANE DROP (EXIT ONLY) DETAILS	FPM (4)-10
685	SH 45/O'CONNOR DRIVE ISOMETRIC ARROW DETAIL	

EROSION CONTROL / WATER QUALITY / ENVIRONMENTAL

686	SW3P INDEX
687 - 694	EROSION CONTROL SH 45
695	EROSION CONTROL O'CONNOR DRIVE
696 - 698	WATER QUALITY OVERALL LAYOUT
699 - 701	WATER QUALITY POND BMP # 1A
702	ENVIRONMENTAL PERMITS, ISSUES AND COMMITMENTS (EPIC)

EROSION CONTROL STANDARDS

703	TEMPORARY EROSION, SED. & WTR. POLLUTION CONTROL MEASURES - FENCE & BALED HAY	EC (1)-09
704	TEMPORARY EROSION, SED. & WTR. POLLUTION CONTROL MEASURES - ROCK FILTER DAMS	EC (2)-93
705	TEMPORARY EROSION, SED. & WTR. POLLUTION CONTROL MEASURES - CONSTRUCTION EXITS	EC (3)-93
706	TEMPORARY EROSION, SED. & WTR. POLLUTION CONTROL MEASURES - DIKES	EC (4)-93
707	TEMPORARY EROSION, SED. & WTR. POLLUTION CONTROL MEASURES - SEDIMENT BASINS & TRAP	EC (6)-93
708	TEMPORARY EROSION CONTROL LOGS	TECL-04

THE STANDARD SHEETS HAVE BEEN ISSUED BY ME OR UNDER MY RESPONSIBLE SUPERVISION AS BEING APPLICABLE TO THIS PROJECT.

Clinton L. Ray P.E.

DATE: 6/17/11

STATE OF TEXAS
CLINTON LUCAS RAY
87874
LICENSED
PROFESSIONAL ENGINEER

Rev. 6/29/11

REV. No.	DATE	REVISION	BY
△			
△			
△			

PBSJ
an Atkins company TBPE REG. # F-474

Texas Department of Transportation
Austin District
©2011 by TxDOT

SH 45 / O'CONNOR DRIVE INDEX OF SHEETS

SCALE: NTS SHEET 3 OF 3

DESIGNED: DMH	FED. RD. DIV. No.	STATE	PROJECT No.	HIGHWAY No.
CHECKED: JMS	6	TEXAS		LP 1/SH 45

DRAWN: DMH	STATE DISTRICT	COUNTY	CONTROL No.	SECTION No.	JOB No.	SHEET No.
CHECKED: JMS	AUSTIN	WILLIAMSON	0683	06	027	310D

DATE: 6/17/2011 TIME: 1:48:26 PM
PLOT DRIVER: RD*11x17*PDF.plt
PEN TABLE: plotordr*ocon.tbl
FILE: r:\trans-design\o'connor\cadd\gen\OC451N*vol2*03.dgn

DATE: 4/8/2011 TIME: 1:21:08 PM

NOTES:

1. BORE HOLES SHOWN ARE FROM 2006 ARTERIAL C CHANGE ORDER PLANS.
2. SEE JANUARY 10, 2006 GEOTECHNICAL REPORT BY TERRACON FOR MORE INFORMATION.
3. SEE "BORING LOGS" FOR MORE INFORMATION.
4. HOLE NUMBER B-33 OMITTED.
5. ADDITIONAL BORE HOLE INFORMATION CAN BE FOUND IN THE SH 45 SECTION 3 PHASE 2 AS-BUILT PLANS AND THE CORRESPONDING NOVEMBER 27, 2000 GEOTECHNICAL REPORT BY FUGRO.

0 50 100 200

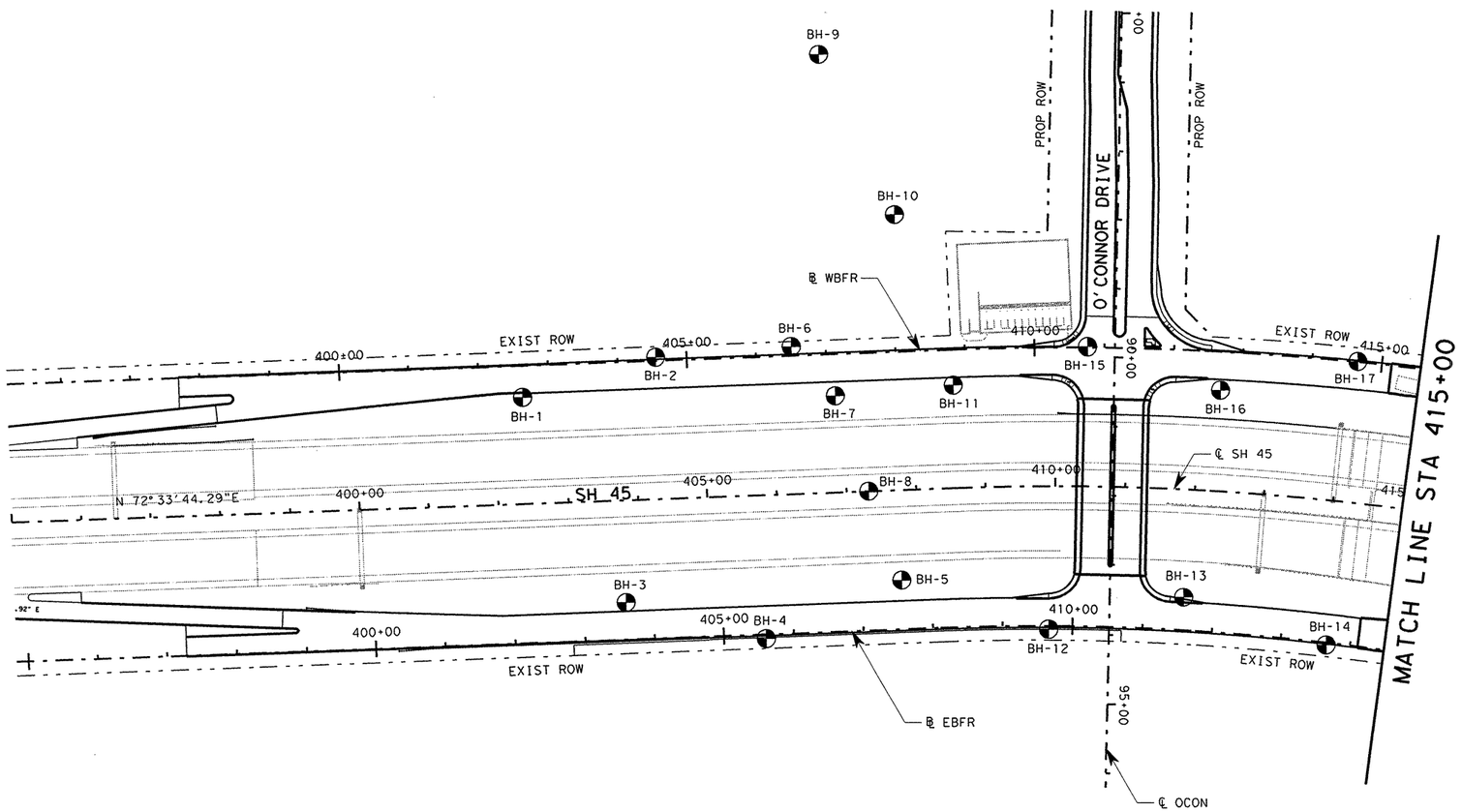

STATE OF TEXAS
DARREN HALLA
107366
LICENSED
PROFESSIONAL ENGINEER

Darren Halla, P.E.
4/11/11

REV. No.	DATE	REVISION	BY
△			
△			
△			

PBSJ
an Atkins company TBPE REG. # F-474

Texas Department of Transportation
Austin District
©2011 by TxDOT

SH 45 / O'CONNOR DRIVE SOIL BORING LAYOUT

SCALE: 1"=200' SHEET 1 OF 3

DESIGNED: EG	FED. RD DIV. No.	STATE	PROJECT No.			HIGHWAY No.	
CHECKED: DMH	6	TEXAS				LP 1/SH 45	
DRAWN: EG	STATE DISTRICT	COUNTY	CONTROL No.	SECTION No.	JOB No.	SHEET No.	
CHECKED: DMH	AUSTIN	WILLIAMSON	0683	06	027	311	

PLOT DRIVER: RD*11x17*PDF.plt
PEN TABLE: plotdr*ocon.tbl
FILE: r:\trans-design\o'connor\cadd\bdg\0C45B001.dgn

DATE: 4/8/2011 TIME: 1:21:12 PM

NOTES:

1. BORE HOLES SHOWN ARE FROM 2006 ARTERIAL C CHANGE ORDER PLANS.
2. SEE JANUARY 10, 2006 GEOTECHNICAL REPORT BY TERRACON FOR MORE INFORMATION.
3. SEE "BORING LOGS" FOR MORE INFORMATION.
4. HOLE NUMBER B-33 OMITTED.
5. ADDITIONAL BORE HOLE INFORMATION CAN BE FOUND IN THE SH 45 SECTION 3 PHASE 2 AS-BUILT PLANS AND THE CORRESPONDING NOVEMBER 27, 2000 GEOTECHNICAL REPORT BY FUGRO.

0 50 100 200

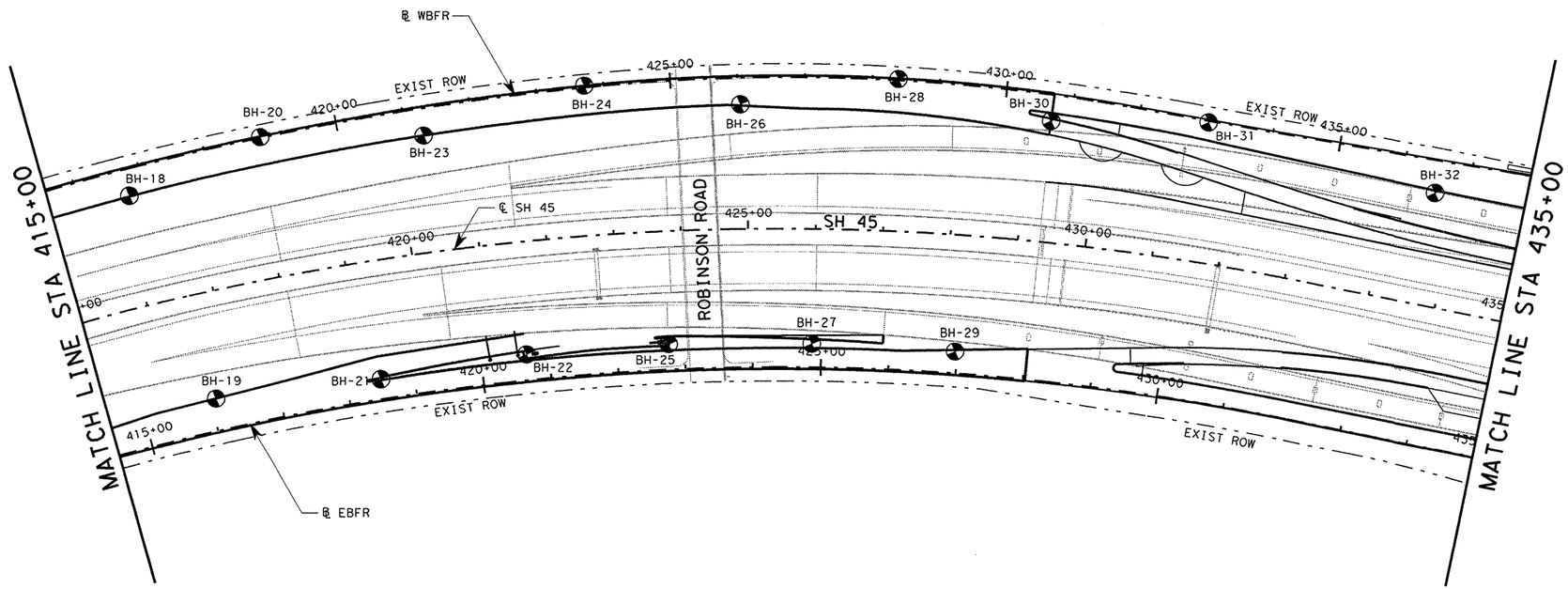

STATE OF TEXAS
DARREN HALLA
107366
LICENSED
PROFESSIONAL ENGINEER

Darren Halla, P.E.
4/11/11

REV. No.	DATE	REVISION	BY
△			
△			
△			

PBSJ
an Atkins company
TBPE REG. # F-474

Texas Department of Transportation
Austin District
©2011 by TxDOT

SH 45 / O'CONNOR DRIVE SOIL BORING LAYOUT

SCALE: 1"=200'

SHEET 2 OF 3

DESIGNED: EG	FED. RD DIV. No.	STATE	PROJECT No.			HIGHWAY No.	
CHECKED: DMH	6	TEXAS				LP 1/SH 45	
DRAWN: EG	STATE DISTRICT	COUNTY	CONTROL No.	SECTION No.	JOB No.	SHEET No.	
CHECKED: DMH	AUSTIN	WILLIAMSON	0683	06	027	312	

PLOT DRIVER: RD*11x17*PDF.plt
PEN TABLE: plotordr*ocon.tbl
FILE: r:\trans-design\o'connor\cadd\bdg\0C45B002.dgn

DATE: 4/8/2011 TIME: 1:21:17 PM

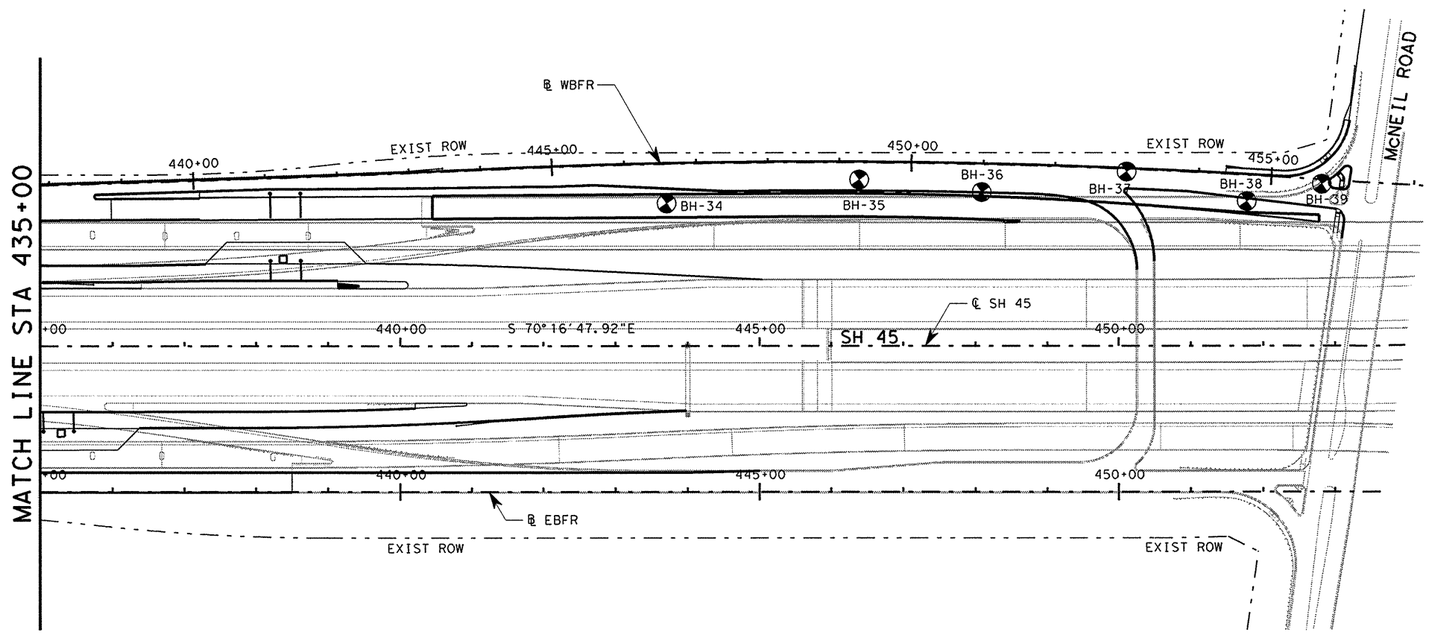

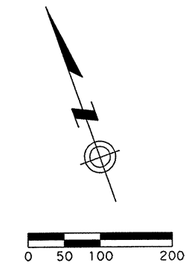

NOTES:

1. BORE HOLES SHOWN ARE FROM 2006 ARTERIAL C CHANGE ORDER PLANS.
2. SEE JANUARY 10, 2006 GEOTECHNICAL REPORT BY TERRACON FOR MORE INFORMATION.
3. SEE "BORING LOGS" FOR MORE INFORMATION.
4. HOLE NUMBER B-33 OMITTED.
5. ADDITIONAL BORE HOLE INFORMATION CAN BE FOUND IN THE SH 45 SECTION 3 PHASE 2 AS-BUILT PLANS AND THE CORRESPONDING NOVEMBER 27, 2000 GEOTECHNICAL REPORT BY FUGRO.

STATE OF TEXAS
DARREN HALLA
107366
LICENSED
PROFESSIONAL ENGINEER

Darren Halla, P.E.
4/11/11

REV. NO.	DATE	REVISION	BY
△			
△			
△			

PBSJ
an Atkins company TBPE REG. # F-474

Texas Department of Transportation
Austin District
©2011 by TxDOT

SH 45 / O'CONNOR DRIVE SOIL BORING LAYOUT

SCALE: 1"=200' SHEET 3 OF 3

DESIGNED: EG	FED. RD DIV. No.	STATE	PROJECT No.			HIGHWAY No.	
CHECKED: DMH	6	TEXAS				LP 1/SH 45	
DRAWN: EG	STATE DISTRICT	COUNTY	CONTROL No.	SECTION No.	JOB No.	SHEET No.	
CHECKED: DMH	AUSTIN	WILLIAMSON	0683	06	027	313	

PLOT DRIVER: RD*11x17*PDF.plt
PEN TABLE: plotordr*xocon.tbl
FILE: r:\trans-design\o'connor\cadd\bdg\0C45B003.dgn

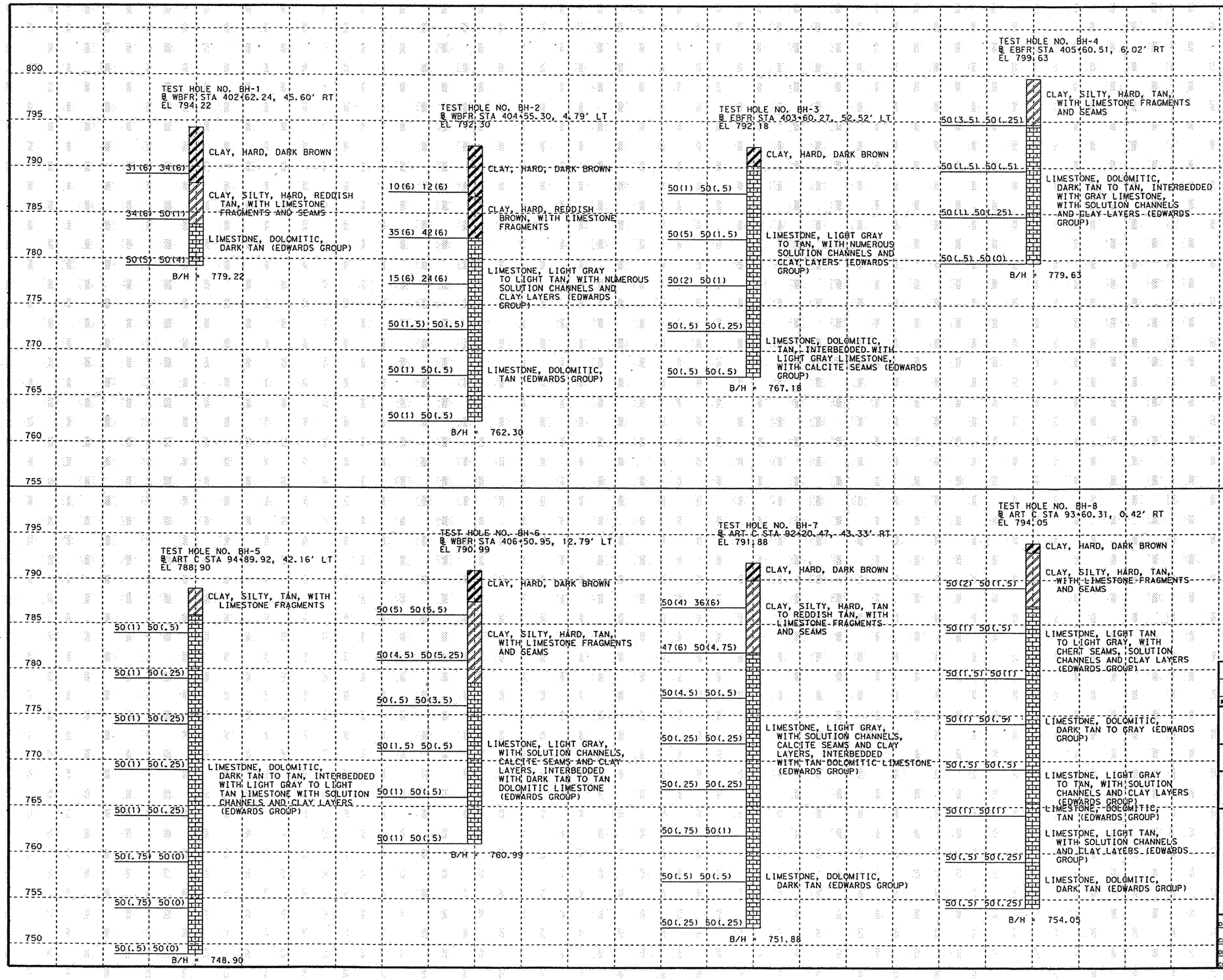

5/1/2006

STATE OF TEXAS
BRYAN S. MOULIN
91084
LICENSED
PROFESSIONAL ENGINEER

Bryan S. Moulin

REV.No.	DATE	REVISION	BY
△			
△			

PBSJ

Terracon

Texas Department of Transportation
© 2006 by TxDOT
TEXAS TURNPIKE AUTHORITY DIVISION

LP 1/SH 45 INTERCHANGE (W) BORING LOGS

SCALE: NTS

SHEET 1 OF 7

DESIGNED: NA	FED. RD DIV. No.	STATE	FEDERAL AID PROJECT No.	HIGHWAY No.
CHECKED: NA	6	TEXAS		SH-45 LOOP 1

DRAWN: TLH	STATE DISTRICT	COUNTY	CONTROL No.	SECTION No.	JOB No.	SHEET No.
CHECKED: JFT	AUSTIN	WILLIAMSON				314

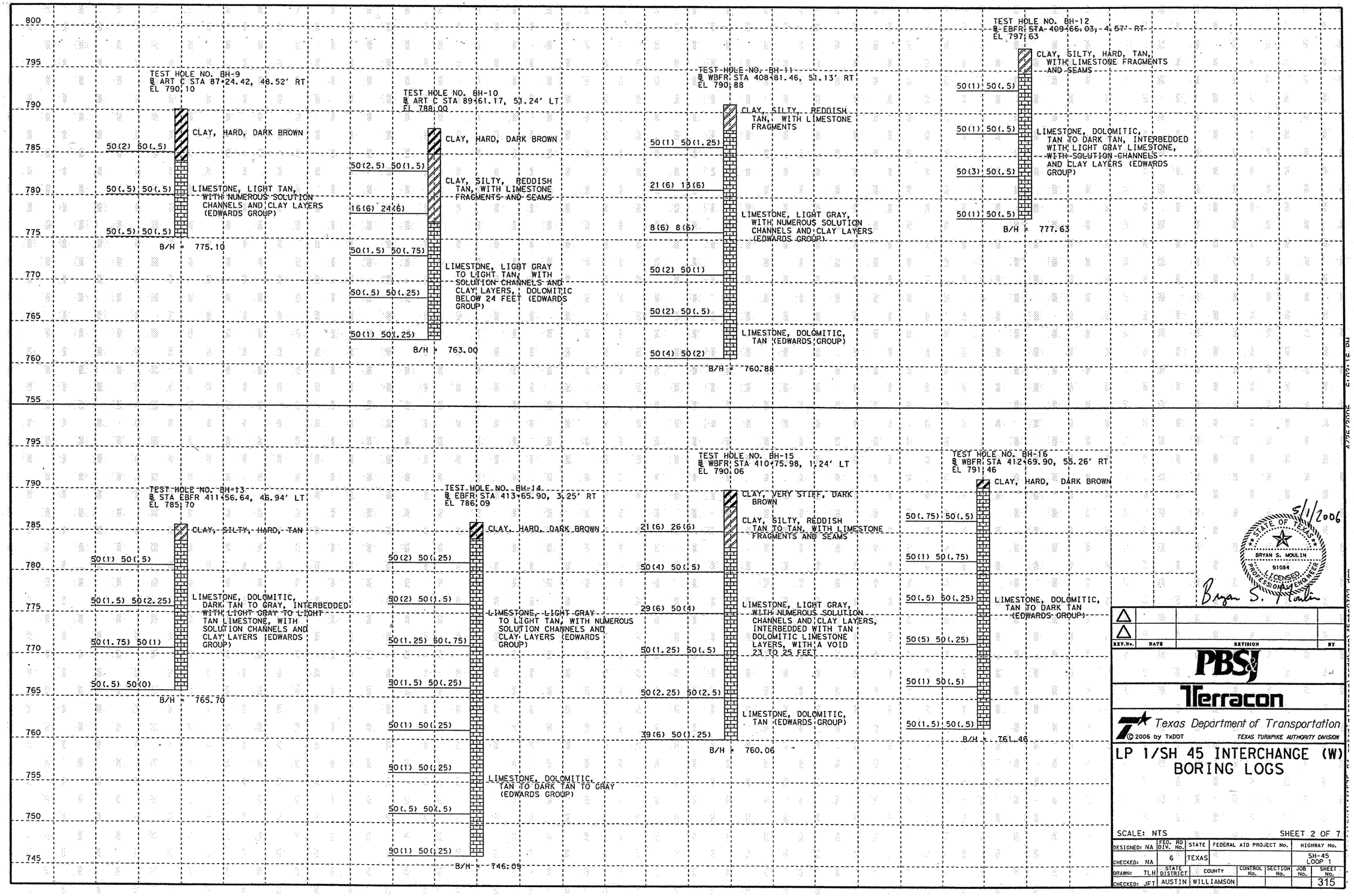

STATE OF TEXAS
BRYAN S. MOULIN
91084
LICENSED PROFESSIONAL ENGINEER
5/1/2006
Bryan S. Moulin

REV.No.	DATE	REVISION	BY
△			
△			

PBSJ

Terracon

Texas Department of Transportation
© 2006 by TxDOT
TEXAS TURNPIKE AUTHORITY DIVISION

LP 1/SH 45 INTERCHANGE (W) BORING LOGS

SCALE: NTS

SHEET 2 OF 7

DESIGNED: NA	FED. RD DIV. No.	STATE	FEDERAL AID PROJECT No.			HIGHWAY No.
CHECKED: NA	6	TEXAS				SH-45 LOOP 1
DRAWN: TLH	STATE DISTRICT	COUNTY	CONTROL No.	SECTION No.	JOB No.	SHEET No.
CHECKED: JFT	AUSTIN	WILLIAMSON				315

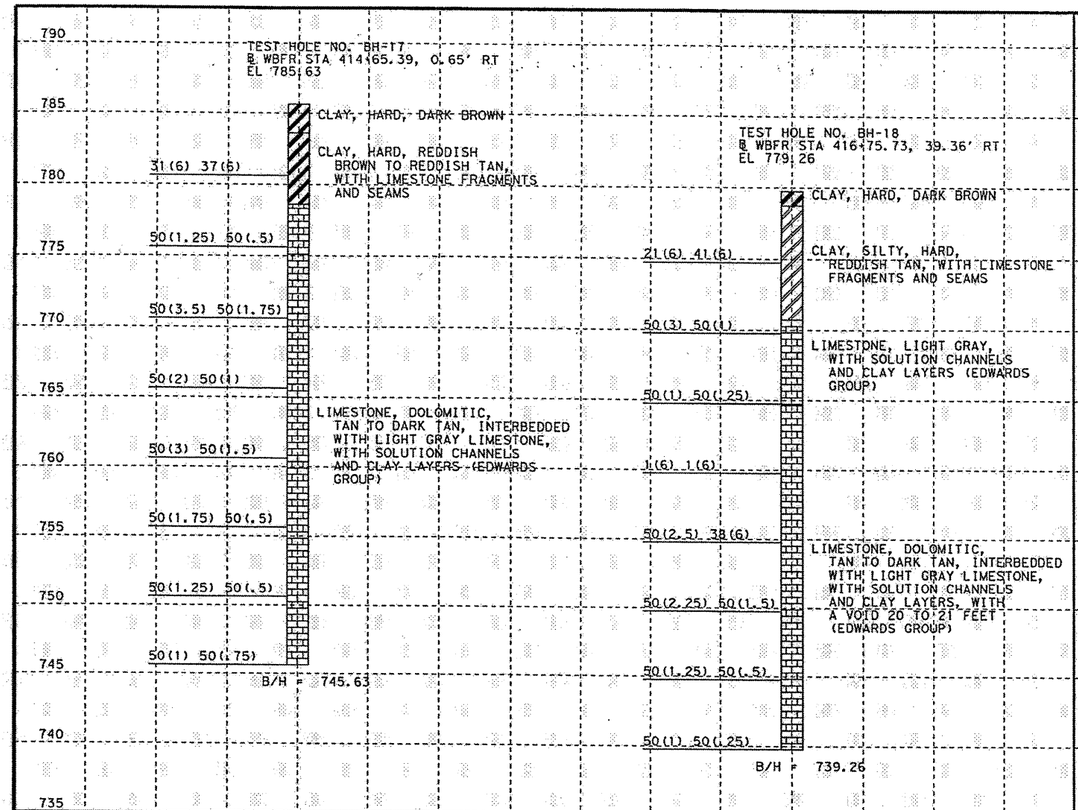

5/1/2006

STATE OF TEXAS
BRYAN S. MOULTIN
91084
LICENSED
PROFESSIONAL ENGINEER

Bryan S. Moultin

REV.No.	DATE	REVISION	BY
△			
△			

PBSJ

Terracon

Texas Department of Transportation
© 2006 by TxDOT
TEXAS TURNPIKE AUTHORITY DIVISION

LP 1/SH 45 INTERCHANGE (W) BORING LOGS

SCALE: NTS

SHEET 3 OF 7

DESIGNED: NA	FED. RD DIV. No.	STATE	FEDERAL AID PROJECT No.		HIGHWAY No.
CHECKED: NA	6	TEXAS			SH-45 LOOP 1
DRAWN: TLH	STATE DISTRICT	COUNTY	CONTROL No.	SECTION No.	JOB No. / SHEET No.
CHECKED: JFT	AUSTIN	WILLIAMSON			316

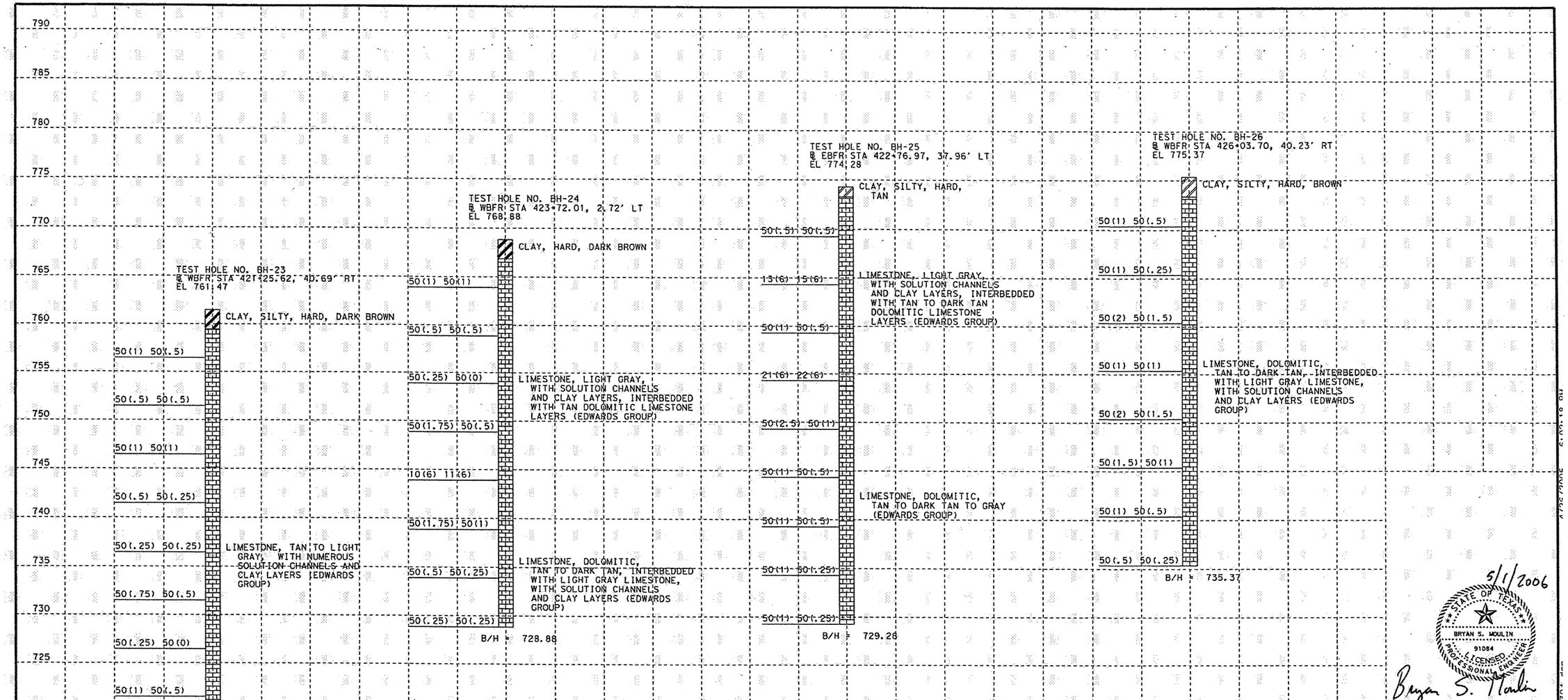

5/1/2006

STATE OF TEXAS
BRYAN S. MOULIN
91084
LICENSED PROFESSIONAL ENGINEER

Bryan S. Moulin

REV.No.	DATE	REVISION	BY
△			
△			

PBSJ

Terracon

Texas Department of Transportation
© 2006 by TxDOT
TEXAS TURNPIKE AUTHORITY DIVISION

LP 1/SH 45 INTERCHANGE (W) BORING LOGS

SCALE: NTS

SHEET 4 OF 7

DESIGNED: NA	FED. RD DIV. No.	STATE	FEDERAL AID PROJECT No.	HIGHWAY No.
CHECKED: NA	6	TEXAS		SH-45 LOOP 1

DRAWN: TLH	STATE DISTRICT	COUNTY	CONTROL No.	SECTION No.	JOB No.	SHEET No.
CHECKED: JFT	AUSTIN	WILLIAMSON				317

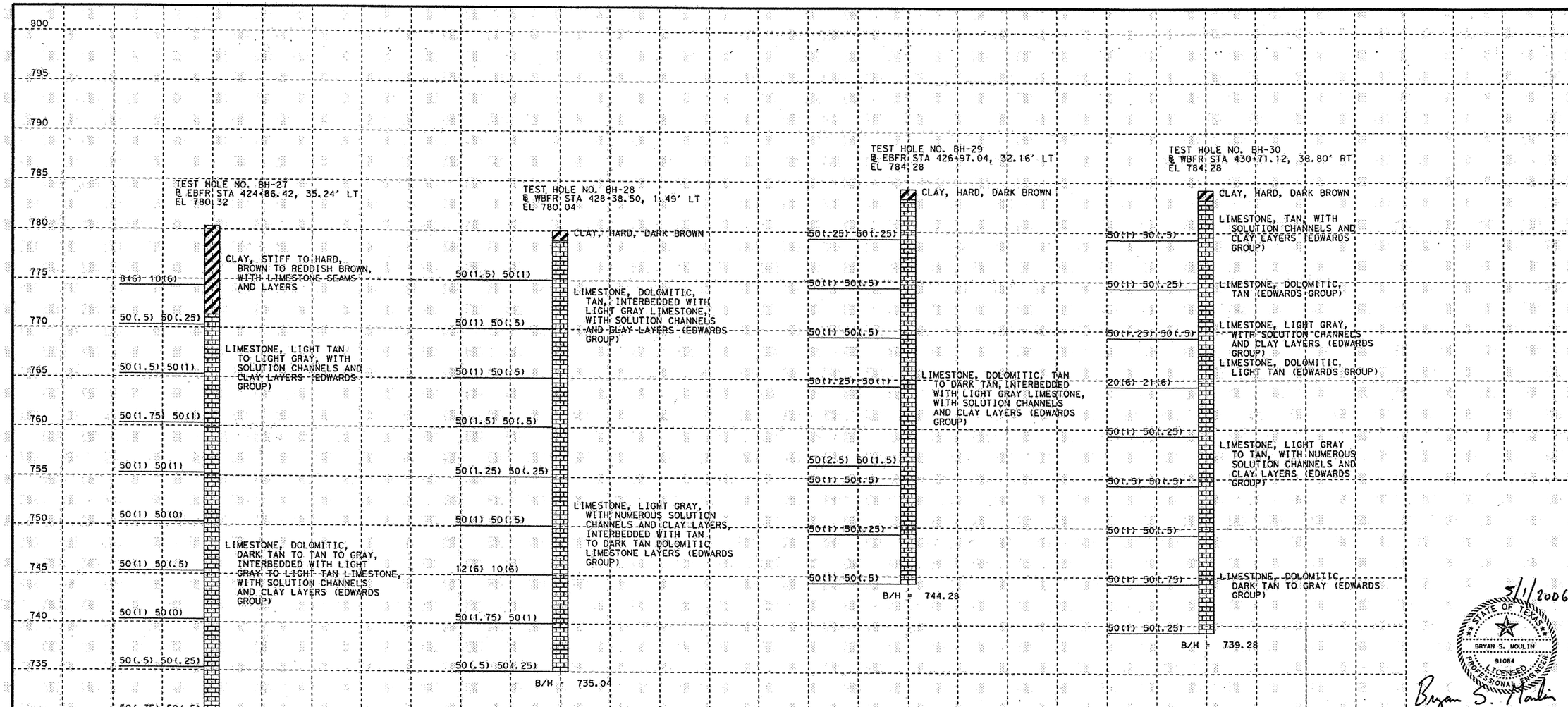

5/1/2006

STATE OF TEXAS
BRYAN S. MOULIN
91084
LICENSED PROFESSIONAL ENGINEER

Bryan S. Moulin

REV.No.	DATE	REVISION	BY
△			
△			

PBS&J

Terracon

Texas Department of Transportation

© 2006 by TxDOT

TEXAS TURNPIKE AUTHORITY DIVISION

LP 1/SH 45 INTERCHANGE (W) BORING LOGS

SCALE: NTS

SHEET 5 OF 7

DESIGNED: NA	FED. RD DIV. No.	STATE	FEDERAL AID PROJECT No.	HIGHWAY No.
CHECKED: NA	6	TEXAS		SH-45 LOOP 1

DRAWN: TLH	STATE DISTRICT	COUNTY	CONTROL No.	SECTION No.	JOB No.	SHEET No.
CHECKED: JFT	AUSTIN	WILLIAMSON				318

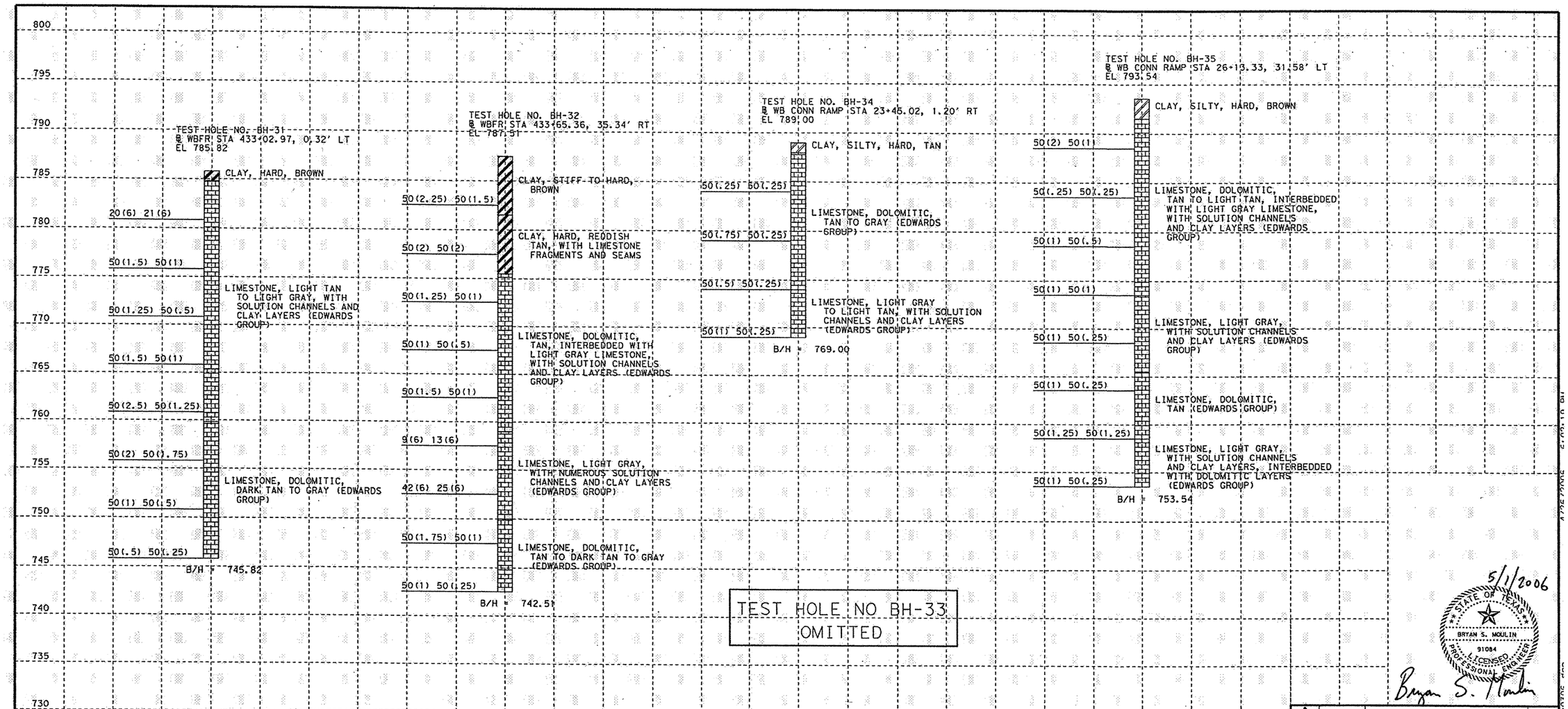

TEST HOLE NO BH-33
OMITTED

5/1/2006
STATE OF TEXAS
BRYAN S. MOULIN
91084
LICENSED
PROFESSIONAL ENGINEER
Bryan S. Moulin

REV.No.	DATE	REVISION	BY
△			
△			

PBS&J
Terracon

Texas Department of Transportation
© 2006 by TxDOT
TEXAS TURNPIKE AUTHORITY DIVISION

LP 1/SH 45 INTERCHANGE (W)
BORING LOGS

SCALE: NTS
SHEET 6 OF 7

DESIGNED: NA	FED. RD DIV. No.	STATE	FEDERAL AID PROJECT No.				HIGHWAY No.	
CHECKED: NA	6	TEXAS					SH-45 LOOP 1	
DRAWN: TLH	STATE DISTRICT	COUNTY		CONTROL No.	SECTION No.	JOB No.	SHEET No.	
CHECKED: JFT	AUSTIN	WILLIAMSON					319	

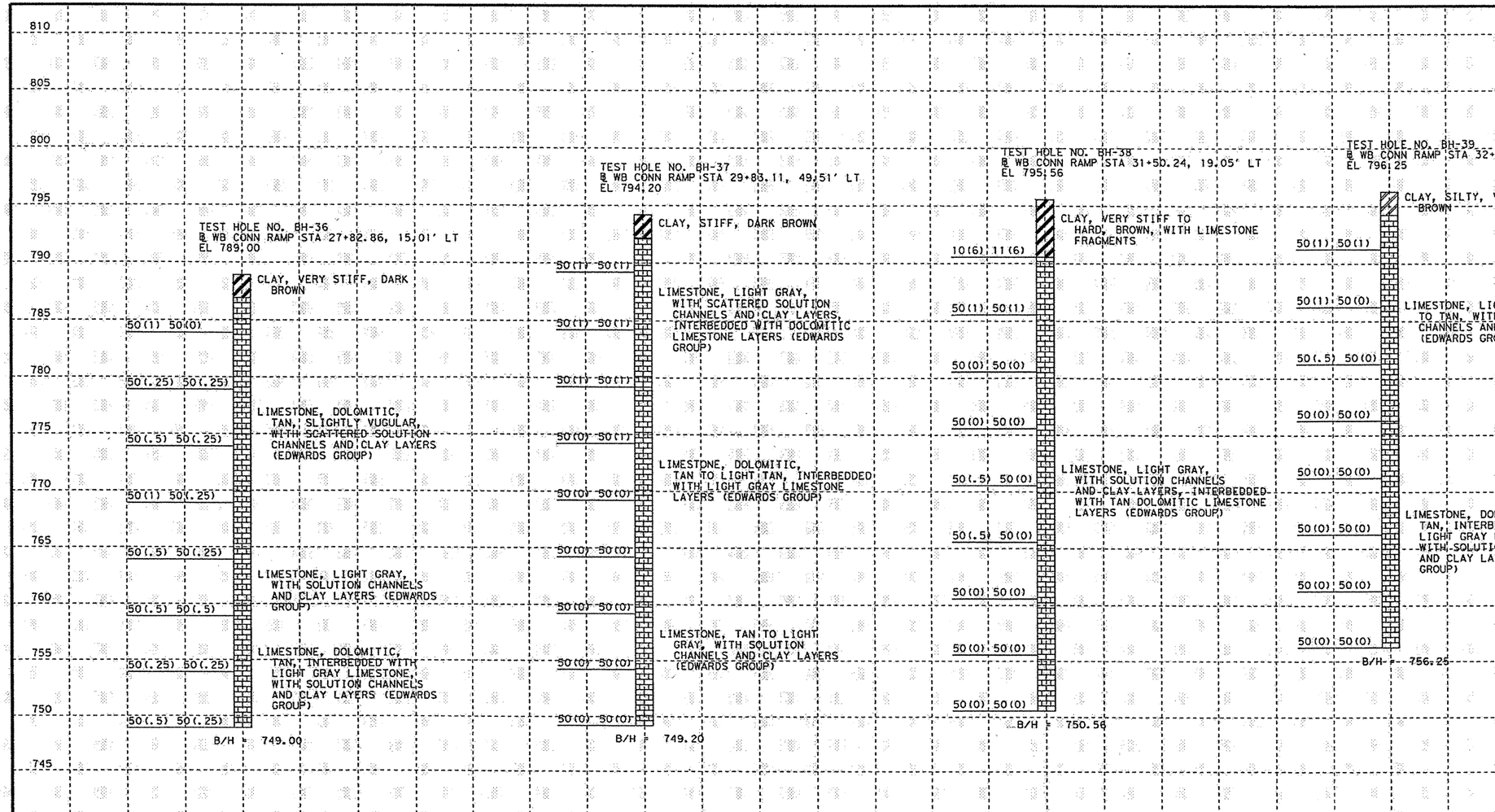

5/1/2006

STATE OF TEXAS
BRYAN S. MOULIN
91084
LICENSED PROFESSIONAL ENGINEER

Bryan S. Moulin

REV.No.	DATE	REVISION	BY
△			
△			

PBSJ

Terracon

Texas Department of Transportation
© 2006 by TxDOT
TEXAS TURNPIKE AUTHORITY DIVISION

LP 1/SH 45 INTERCHANGE (W)
BORING LOGS

SCALE: NTS

SHEET 7 OF 7

DESIGNED: NA	FED. RD DIV. No.	STATE	FEDERAL AID PROJECT No.	HIGHWAY No.
CHECKED: NA	6	TEXAS		SH-45 LOOP 1

DRAWN: TLH	STATE DISTRICT	COUNTY	CONTROL No.	SECTION No.	JOB No.	SHEET No.
CHECKED: JFT	AUSTIN	WILLIAMSON				320

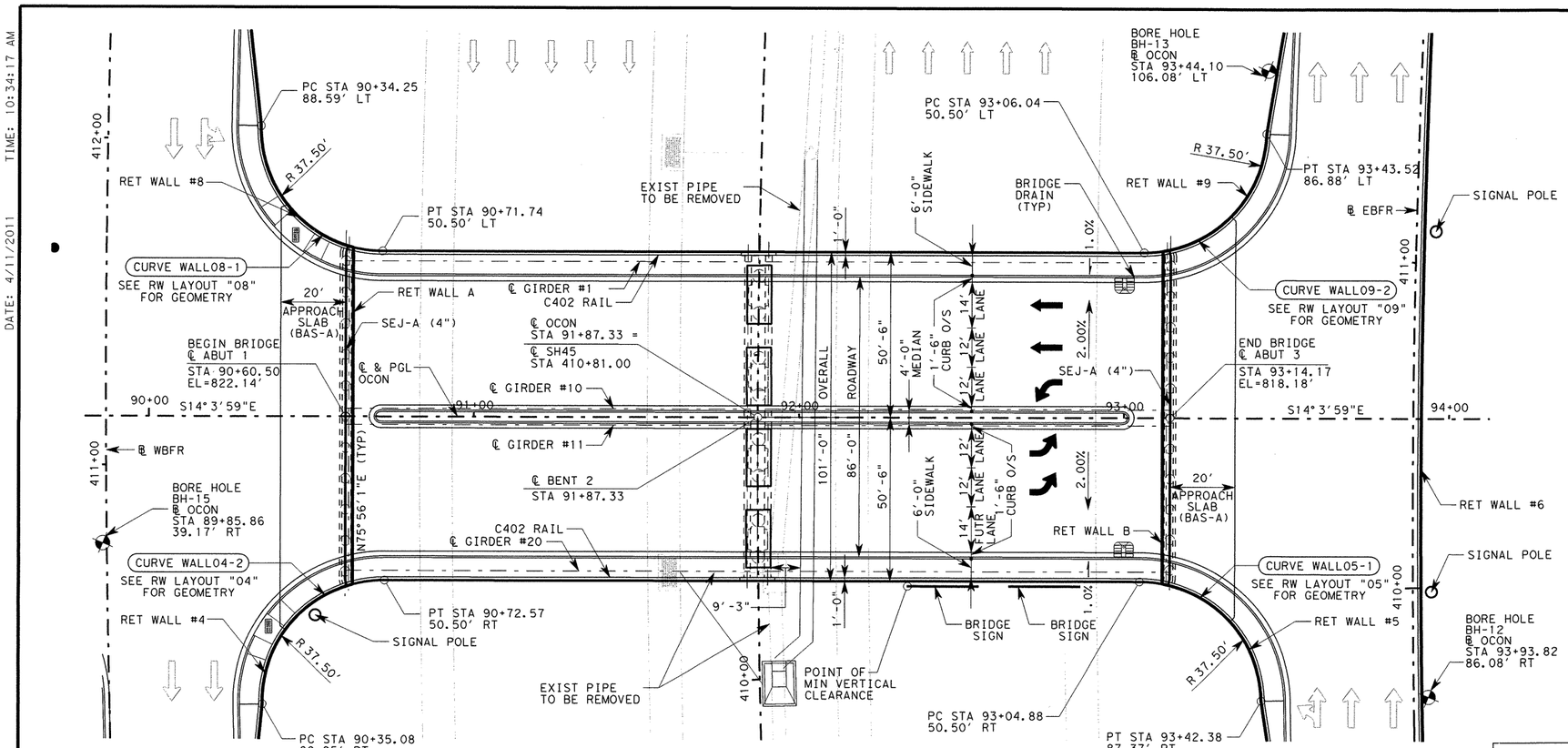

PLAN

GENERAL NOTES:

1. DESIGNED ACCORDING TO AASHTO LRFD BRIDGE DESIGN SPECIFICATIONS, 4TH EDITION, 2007 AND 2009 CURRENT INTERIMS FOR HL-93 LOADING.
2. FOR BORING LOGS, SEE "BORING LOGS" SHEETS.
3. FOR TYPICAL SECTION, SEE SHEET 2 OF 2
4. DRILLED SHAFTS ARE DESIGNED WITH POINT BEARING AND SKIN FRICTION TO BE FOUNDED AT ELEVATIONS SHOWN OR LOWER AS NECESSARY TO PENETRATE A MINIMUM OF ONE SHAFT DIAMETER INTO UNWEATHERED LIMESTONE.
5. "H" - HEIGHTS SHOWN ARE APPROXIMATE. ACTUAL COLUMN HEIGHT SHALL BE FIELD VERIFIED PRIOR TO CONSTRUCTION.
6. FURNISH AND INSTALL 2 - 2" DIA. PVC CONDUITS IN EACH BRIDGE RAIL.
7. FOR TRAFFIC SIGNAL, VIVDS AND ILLUMINATION WIRING FUTURE USE CONDUITS SIZES AND LOCATIONS SEE SLAB DETAILS SHEET " 253.67' PRESTRESS CONC I-GIRDER UNIT" AND FOR CONDUIT QUANTITIES SEE "TRAFFIC SIGNAL LAYOUT O'CONNOR DRIVE" SHEET.

DESIGN SPEED: 40 MPH
ADT: 17,400 (2040)
RFC:
RURAL - COLLECTOR
NBI: 14-246-0-0683-06-482

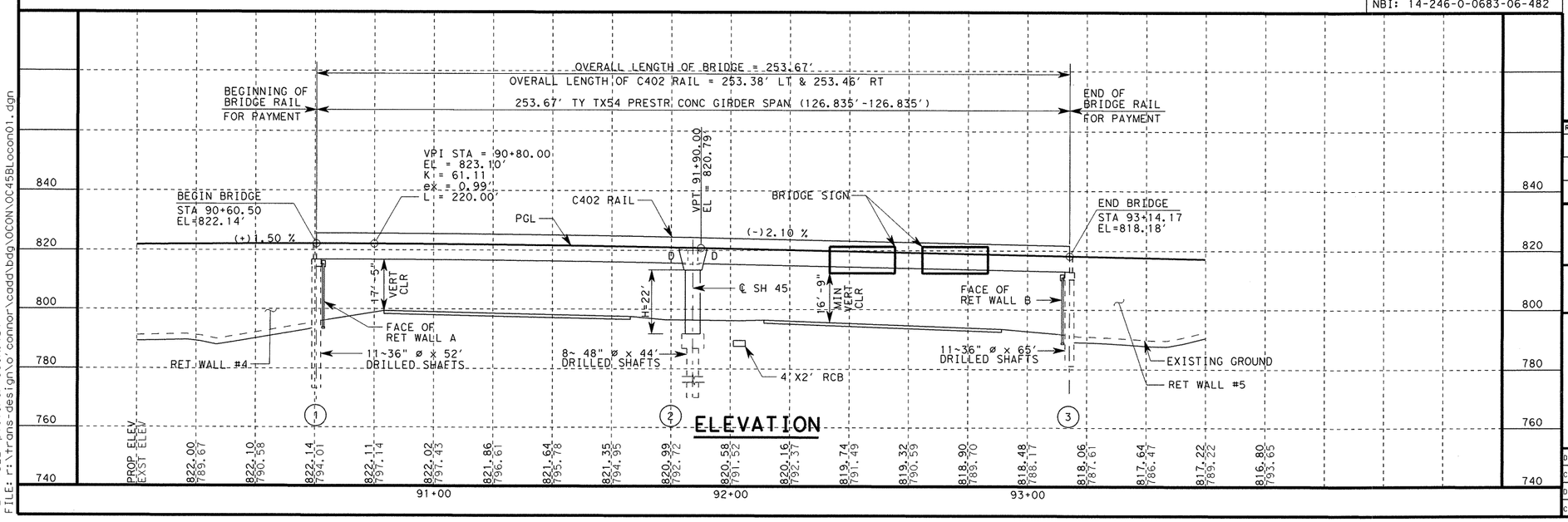

ELEVATION

HL-93 LOADING

STATE OF TEXAS
OSAMA A. SHAHAWY
88476
LICENSED
PROFESSIONAL ENGINEER
4/11/11

REV. NO.	DATE	REVISION	BY
△			
△			
△			

PBSJ an Atkins company TBPE REG. # F-474

Texas Department of Transportation
Austin District
©2011 by TxDOT

SH 45 / O'CONNOR DRIVE
O'CONNOR DRIVE
BRIDGE LAYOUT

SCALE: 1"=40'H, 1"=40'V SHEET 1 OF 2

DESIGNED: RBR	FED. RD DIV. No.	STATE	PROJECT No.			HIGHWAY No.	
CHECKED: OAS	6	TEXAS				LP 1/SH 45	
DRAWN: RBR	STATE DISTRICT	COUNTY	CONTROL No.	SECTION No.	JOB No.	SHEET No.	
CHECKED: OAS	AUSTIN	WILLIAMSON	0683	06	027	321	

PLOT DRIVER: RD*11x17*PDF.plt
PEN TABLE: plotordr*ocon.tbl
FILE: r:\trans-design\o'connor\cadd\bdg\OCON\OC45BLocon01.dgn
DATE: 4/11/2011 TIME: 10:34:17 AM

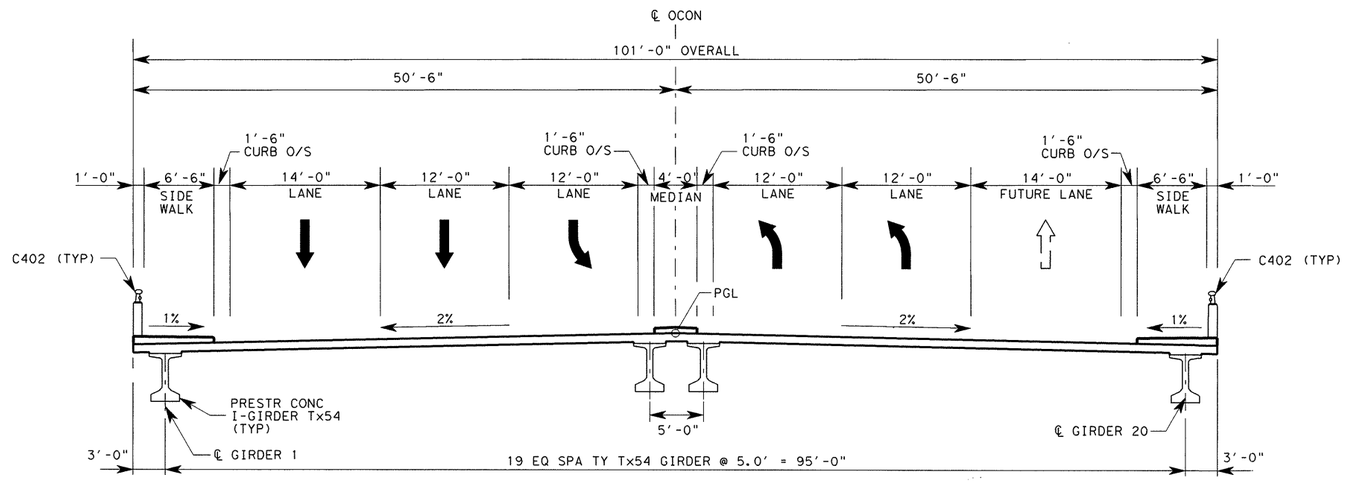

O'CONNOR DRIVE TYPICAL SECTION

HL-93 LOADING

STATE OF TEXAS
OSAMA A. SHAHAWY
88476
LICENSED PROFESSIONAL ENGINEER
4/11/11

REV. No.	DATE	REVISION	BY
△			
△			
△			

PBSJ an Atkins company TBPE REG. # F-474

Texas Department of Transportation
Austin District

©2011 by TxDOT

SH 45 / O'CONNOR DRIVE
O'CONNOR DRIVE
BRIDGE LAYOUT

SCALE: 1"=40'H, 1"=40'V SHEET 2 OF 2

DESIGNED: RBR	FED. RD DIV. No.	STATE	PROJECT No.		HIGHWAY No.	
CHECKED: OAS	6	TEXAS			LP 1/SH 45	
DRAWN: RBR	STATE DISTRICT	COUNTY	CONTROL No.	SECTION No.	JOB No.	SHEET No.
CHECKED: OAS	AUSTIN	WILLIAMSON	0683	06	027	322

DATE: 4/11/2011 TIME: 10:34:19 AM
PLOT DRIVER: RD*11x17*PDF.plt
PEN TABLE: plotcfg*ocon.tbl
FILE: r:\trans-design\o'connor\cadd\bdg\OCONN0C45BLocon02.dgn

SUMMARY OF BRIDGE QUANTITIES

ITEM NO.	400	403	416	416	416	416	420	420	420	422	425	428	450	454	471	481	531	536	618
DESC. CODE	2001	2001	2004	2078	2006	2079	2003	2017	2018	2003	2068	2001	2071	2001	2003	2012	2004	2002	2018
DESCRIPTION	STRUCT EXCAV	TEMPORARY SPL SHORING	DRILL SHAFT (36 IN)	DRILL SHAFT CASINGS (36 IN)	DRILL SHAFT (48 IN)	DRILL SHAFT CASINGS (48 IN)	CL C CONC (ABUT)	CL C CONC (BENT) (MASS)	CL C CONC (FOOTING) (MASS)	REINF CONC SLAB (HPC) (CL S)	PRESTR CONC GIRDER (TX54)	CONC SURF TREAT (CLASS I)	RAIL (TY C402)	SEALED EXP. JT. (4 IN) (SEJ-A)	GRATE & FRAME	PVC PIPE (SCH 40) (6 IN)	CONC SIDEWALKS (6")	CONC MEDIAN	CONDUIT (PVC) (SCH 40) (2 IN)
	CY	SF	LF	LF	LF	LF	CY	CY	CY	SF	LF	SY	LF	LF	EA	LF	SY	SY	LF
ABUTMENT			1287	30			105.0												
1- INTERIOR BENT	180	1520			352	70		303.5	98.8	23649	4967.4	2675	508	199	2	26			
1- UNIT 253.67'																	422	113	1016
TOTAL	180	1520	1287	30	352	70	105.0	303.5	98.8	23649	4967.4	2675	508	199	2	26	422	113	1016

BEARING SEAT ELEVATIONS

		BEAM 1	BEAM 2	BEAM 3	BEAM 4	BEAM 5	BEAM 6	BEAM 7	BEAM 8	BEAM 9	BEAM 10	BEAM 11	BEAM 12	BEAM 13	BEAM 14	BEAM 15	BEAM 16	BEAM 17	BEAM 18	BEAM 19	BEAM 20
ABUT 1	FWD	815.708	815.808	815.908	816.008	816.108	816.208	816.308	816.408	816.508	816.608	816.608	816.508	816.408	816.308	816.208	816.108	816.008	815.908	815.808	815.708
		BEAM 1	BEAM 2	BEAM 3	BEAM 4	BEAM 5	BEAM 6	BEAM 7	BEAM 8	BEAM 9	BEAM 10	BEAM 11	BEAM 12	BEAM 13	BEAM 14	BEAM 15	BEAM 16	BEAM 17	BEAM 18	BEAM 19	BEAM 20
BENT 2	BK	814.481	814.581	814.681	814.781	814.881	814.981	815.081	815.181	815.281	815.381	815.381	815.281	815.181	815.081	814.981	814.881	814.781	814.681	814.581	814.481
	FWD	814.350	814.450	814.550	814.650	814.750	814.850	814.950	815.050	815.150	815.250	815.250	815.150	815.050	814.950	814.850	814.750	814.650	814.550	814.450	814.350
		BEAM 1	BEAM 2	BEAM 3	BEAM 4	BEAM 5	BEAM 6	BEAM 7	BEAM 8	BEAM 9	BEAM 10	BEAM 11	BEAM 12	BEAM 13	BEAM 14	BEAM 15	BEAM 16	BEAM 17	BEAM 18	BEAM 19	BEAM 20
ABUT 3	BK	811.774	811.874	811.974	812.074	812.174	812.274	812.374	812.474	812.574	812.674	812.674	812.574	812.474	812.374	812.274	812.174	812.074	811.974	811.874	811.774

STATE OF TEXAS
OSAMA A. SHAHAWY
88476
LICENSED PROFESSIONAL ENGINEER
6/22/11

HL-93
LOADING

REV. No.	DATE	REVISION	BY
△			
△			
△			

PBSJ
an Atkins company
TBPE REG. # F-474

Texas Department of Transportation
Austin District
©2011 by TxDOT

SH 45 / O'CONNOR DRIVE
O'CONNOR DRIVE
ESTIMATED QUANTITIES
AND
BEARING SEAT ELEVATIONS

SHEET 1 OF 1

DESIGNED: RBR	FED. RD DIV. No.	STATE	PROJECT No.			HIGHWAY No.
CHECKED: OAS	6	TEXAS				LP 1/SH 45
DRAWN: RBR	STATE DISTRICT	COUNTY	CONTROL No.	SECTION No.	JOB No.	SHEET No.
CHECKED: OAS	AUSTIN	WILLIAMSON	0683	06	027	323

Rev. 6/29/11

DATE: 6/22/2011 TIME: 12:57:33 PM
PLOT DRIVER: RD*11x17*PDF.plt
PEN TABLE: plotordr.tbl
FILE: R:\Trans-Design\O'Connor\CADD\BDG\OCON\OC45BOocon.dgn

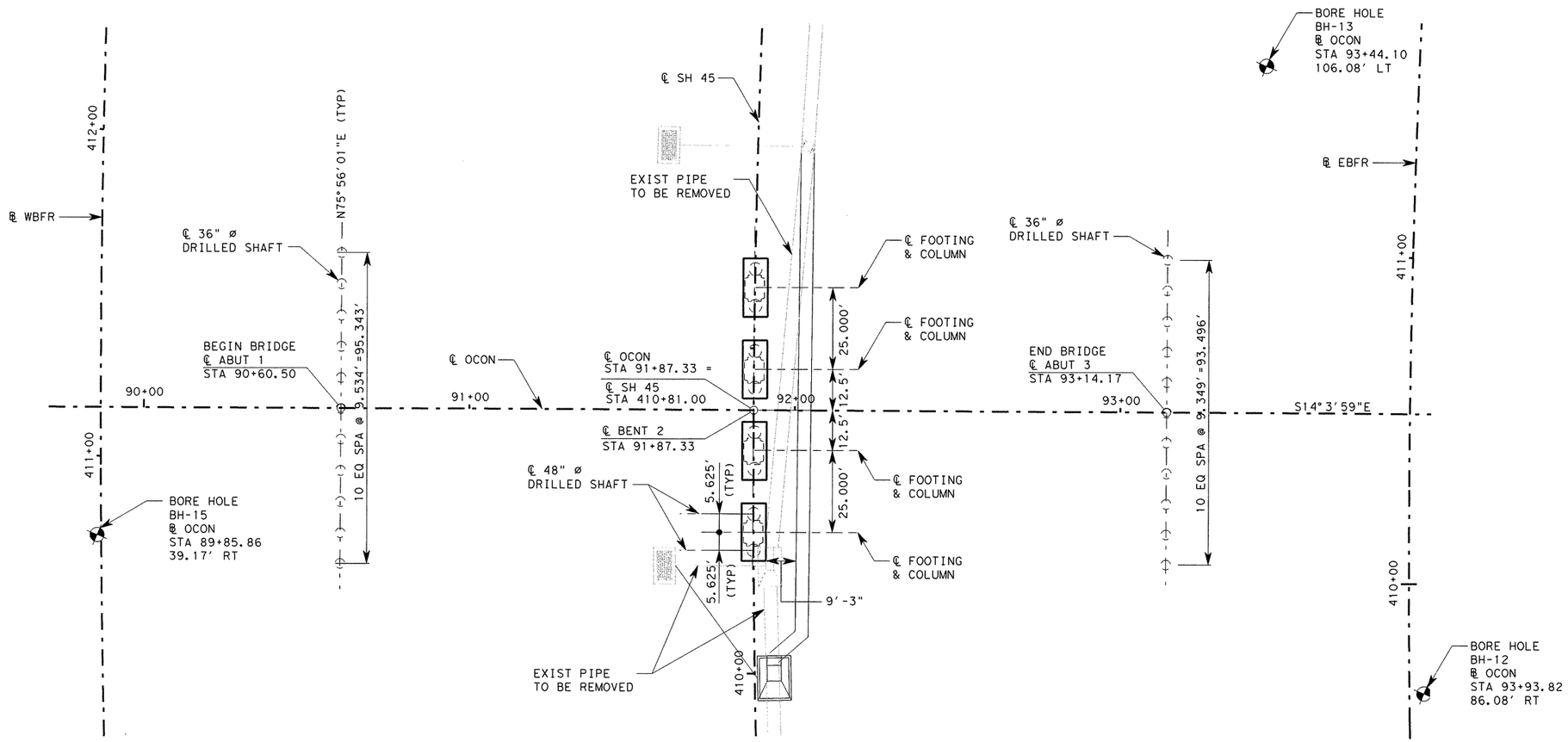

0 10 20 40

GENERAL NOTES:

1. FOR LENGTH OF DRILLED SHAFTS, SEE BRIDGE LAYOUTS.
2. FOR DRILL SHAFT LOADS AND DETAILS, SEE FOUNDATION DETAILS, EXCEPT FOR ABUTMENTS.
3. ALL BENTS ARE RADIAL TO CONTROL UNLESS OTHERWISE NOTED.
4. ALL DRILLED SHAFTS ARE 48" DIAMETER UNLESS OTHERWISE NOTED.
5. THE DRILLED SHAFT 28 DAY CONCRETE STRENGTH SHALL BE 3600 PSI
6. AFTER SHAFTS ARE DRILLED TO THE PLAN DEPTH, THE SHAFTS SHOULD BE PROBED TO A DEPTH OF 1.5 TIMES THE SHAFT DIAMETER OR TO A DEPTH OF 5 FT, WHICHEVER IS GREATER. IF VOIDS, EITHER OPEN OR CLAY-FILLED, ARE ENCOUNTERED, THE SHAFTS SHOULD BE ADVANCED BELOW THE VOID(S) AND RE-PROBED. CONTINUE PROBING AND ADVANCING UNTIL NO VOIDS ARE ENCOUNTERED WITHIN A DEPTH OF 1.5 DIAMETERS BELOW THE SHAFT BOTTOM.
7. WHEN SLOUGHING AND/OR GROUNDWATER SEEPAGE ARE ENCOUNTERED DURING DRILLED SHAFT INSTALLATION (I.E. SPOILS ARE RECORDED FROM THE DRILLING OPERATIONS) THE CONTRACTOR SHALL INSTALL PERMANENT CASING AS DIRECTED BY THE ENGINEER TO EXCLUDE THE GROUND WATER.

STATE OF TEXAS
OSAMA A. SHAHAWY
88476
LICENSED
PROFESSIONAL ENGINEER
6/7/11

HL-93
LOADING

REV. No.	DATE	REVISION	BY
△			
△			
△			

PBSJ
an Atkins company
TBPE REG. # F-474

Texas Department of Transportation
Austin District
©2011 by TxDOT

SH 45 / O'CONNOR DRIVE
O'CONNOR DRIVE
FOUNDATION LAYOUT

SCALE: 1"=40'
SHEET 1 OF 1

DESIGNED: RBR	FED. RD DIV. No.	STATE	PROJECT No.			HIGHWAY No.	
CHECKED: OAS	6	TEXAS				LP 1/SH 45	
DRAWN: RBR	STATE DISTRICT	COUNTY	CONTROL No.	SECTION No.	JOB No.	SHEET No.	
CHECKED: OAS	AUSTIN	WILLIAMSON	0683	06	027	324	

Rev. 6/29/11

DATE: 6/2/2011 TIME: 1:37:51 PM

PLOT DRIVER: RD*11x17*PDF.pl+
PEN TABLE: plotordr*ocon.tbl
FILE: r:\trans-design\o'connor\cadd\bdg\OCON\OC45FLocon.dgn

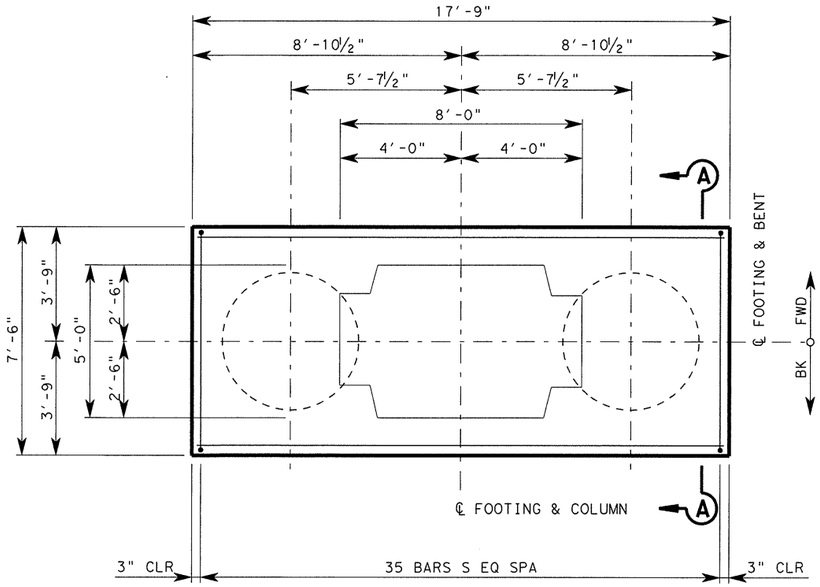

PLAN

ESTIMATED QUANTITES					
COL NO	CLASS "C" (MASS) CONC (FOOTING) (CY)	STRUCT EXCAV (CY)	TEMP SPCL SHORING (SF)	DRILL SHAFT (48" DIA) (LF)	CALCULATED DRILL SHAFT LOAD (EACH) (TONS)
1	24.7	45.0	380	88	582
2	24.7	45.0	380	88	582
3	24.7	45.0	380	88	582
4	24.7	45.0	380	88	582

BILL OF REINFORCING STEEL (TYP EACH FOOTING)				
BAR	NO.	SIZE	LENGTH	WEIGHT
F1	8	#8	17'-3"	368
F2	13	#11	17'-3"	1,191
FD	40	#11	15'-5"	3,276
S	35	#6	23'-8"	1244
T	10	#8	17'-3"	461
U1	10	#6	9'-10"	147
U2	16	#6	6'-4"	151
REINFORCING STEEL *			LB	6839

* FOR CONTRACTOR'S INFORMATION ONLY

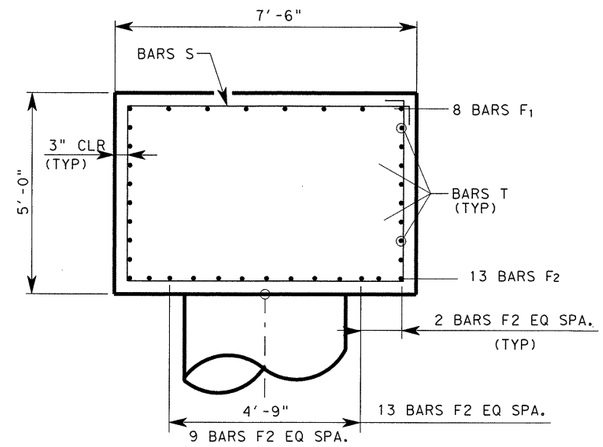

SECTION A-A

NOTES:

1. DESIGNED ACCORDING TO AASHTO LRFD BRIDGE DESIGN SPECIFICATIONS, 4TH EDITION, 2007 AND 2009 CURRENT INTERIMS FOR HL-93 LOADING.
2. ALL DIMENSIONS TO THE REINFORCING STEEL ARE TO THE ℄ OF THE BAR UNLESS OTHERWISE NOTED.
3. SEE "FOUNDATION LAYOUT" FOR FOUNDATION LOCATION AND ORIENTATION.
4. SEE CORRESPONDING BENT SHEET FOR PLACEMENT OF BARS FD TO MATCH COLUMN REINFORCING.
5. SPECIAL SHORING SHALL BE USED AS NOTED WITH THE ABILITY TO POUR AGAINST EARTH. CONTRACTOR SHALL MAINTAIN 3" MINIMUM CLEAR COVER.

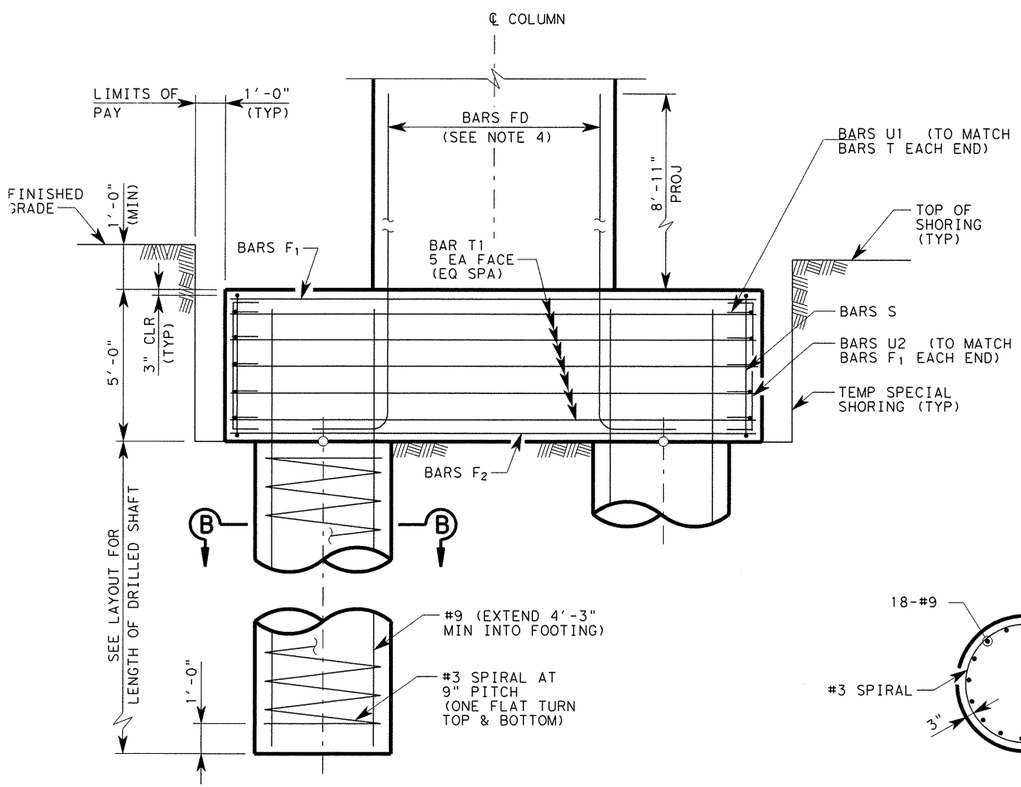

ELEVATION

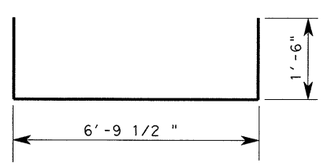

BARS U

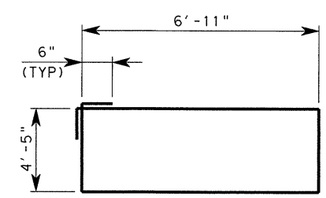

BARS S

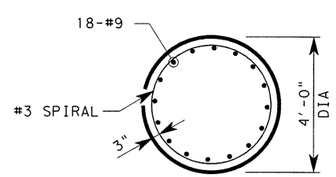

SECTION B-B

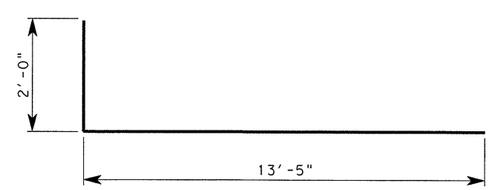

BARS FD

HL-93 LOADING

STATE OF TEXAS
OSAMA A. SHAHAWY
88476
LICENSED PROFESSIONAL ENGINEER
6/7/11

REV. NO.	DATE	REVISION	BY
△			
△			
△			

PBSJ an Atkins company TBPE REG. # F-474

Texas Department of Transportation
Austin District
©2011 by TxDOT

SH 45 / O'CONNOR DRIVE
O'CONNOR DRIVE
FOUNDATION DETAILS

SCALE: NTS1' SHEET 1 OF 1

DESIGNED: RBR	FED. RD DIV. No.	STATE	PROJECT No.		HIGHWAY No.	
CHECKED: OAS	6	TEXAS			LP 1/SH 45	
DRAWN: RBR	STATE DISTRICT	COUNTY	CONTROL No.	SECTION No.	JOB No.	SHEET No.
CHECKED: OAS	AUSTIN	WILLIAMSON	0683	06	027	325

Rev. 6/29/11

DATE: 6/2/2011 TIME: 1:37:53 PM

PLOT DRIVER: RD*11x17*PDF.plt
PEN TABLE: plotordr*ocon.tbl
FILE: r:\trans-design\o'connor\oadd\bdg\OCON\0C45FDocon.dgn

GENERAL NOTES:

1. DESIGNED ACCORDING TO AASHTO LRFD BRIDGE DESIGN SPECIFICATIONS, 4TH EDITION, 2007 AND CURRENT INTERIMS FOR HL-93 LOADING.
2. CONCRETE STRENGTH SHALL BE F'C = 3,600 PSI.
3. ALL REINFORCING STEEL SHALL BE GRADE 60.
4. CALCULATED FOUNDATION LOADS ~ CAP DRILLED SHAFTS = 132 TONS/DRILLED SHAFT
5. SEE FOUNDATION DETAIL STANDARD SHEET, FD, FOR ALL FOUNDATION DETAILS AND NOTES.

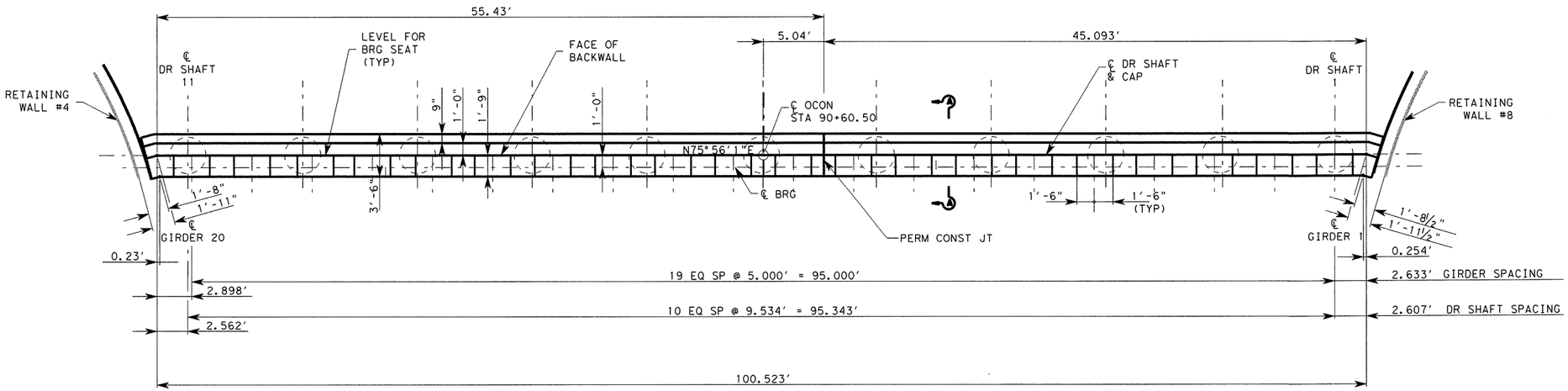

PLAN

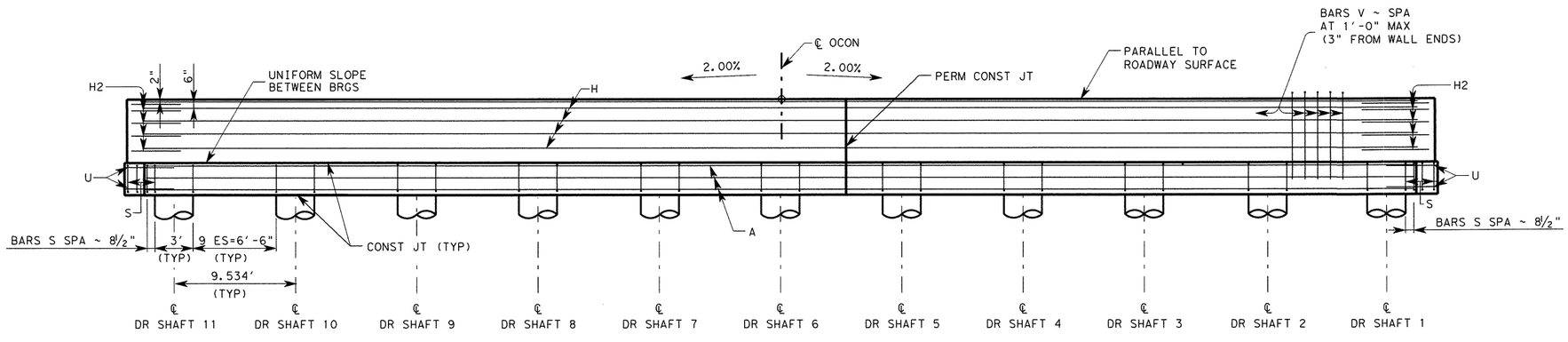

ELEVATION

HL-93 LOADING

STATE OF TEXAS — OSAMA A. SHAHAWY — 88476 — LICENSED PROFESSIONAL ENGINEER — 4/11/11

REV. No.	DATE	REVISION	BY
△			
△			
△			

PBSJ an Atkins company TBPE REG. # F-474

Texas Department of Transportation Austin District

©2011 by TxDOT

SH 45 / O'CONNOR DRIVE
O'CONNOR DRIVE
ABUTMENT 1

SCALE: NTS — SHEET 1 OF 3

DESIGNED: RBR	FED. RD DIV. No.	STATE	PROJECT No.		HIGHWAY No.	
CHECKED: OAS	6	TEXAS			LP 1/SH 45	
DRAWN: RBR	STATE DISTRICT	COUNTY	CONTROL No.	SECTION No.	JOB No.	SHEET No.
CHECKED: OAS	AUSTIN	WILLIAMSON	0683	06	027	326

DATE: 4/11/2011 TIME: 1:02:04 PM
PLOT DRIVER: RD*11x17*PDF.plt
PEN TABLE: plotordr.tbl
FILE: R:\Trans-Design\O'Connor\CADD\BDG\OCON\OC45ABocon01.dgn

GENERAL NOTES:

1. DESIGNED ACCORDING TO AASHTO LRFD BRIDGE DESIGN SPECIFICATIONS, 4TH EDITION, 2007 AND CURRENT INTERIMS FOR HL-93 LOADING.
2. CONCRETE STRENGTH SHALL BE F'C = 3,600 PSI.
3. ALL REINFORCING STEEL SHALL BE GRADE 60.
4. CALCULATED FOUNDATION LOADS ~ CAP DRILLED SHAFTS = 132 TONS/DRILLED SHAFT
5. SEE FOUNDATION DETAIL STANDARD SHEET, FD, FOR ALL FOUNDATION DETAILS AND NOTES.

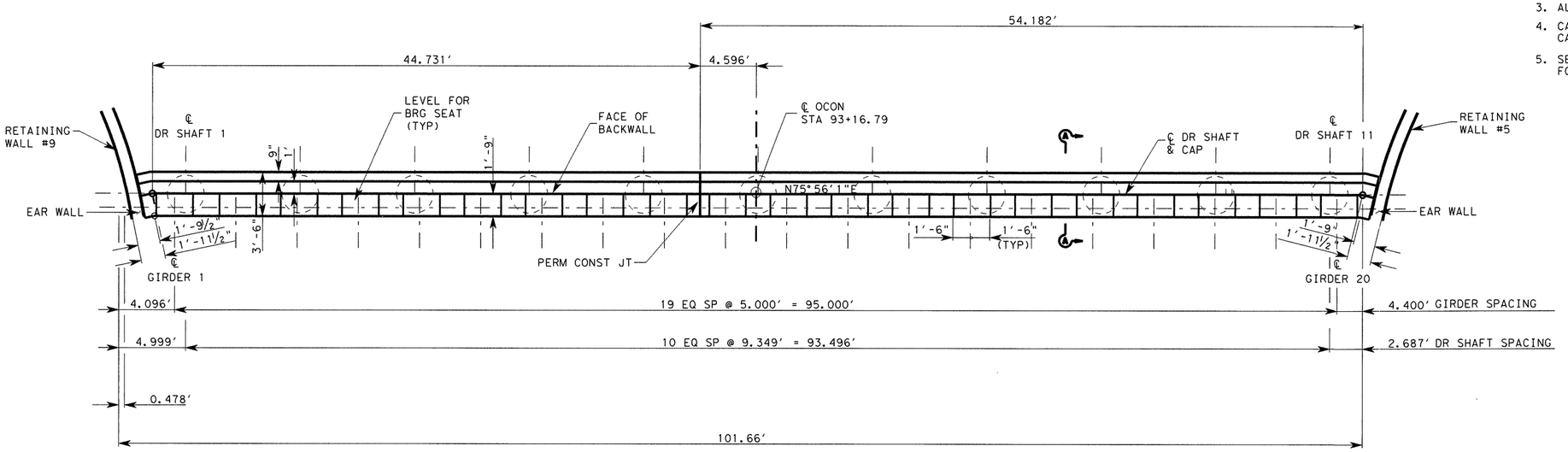

PLAN

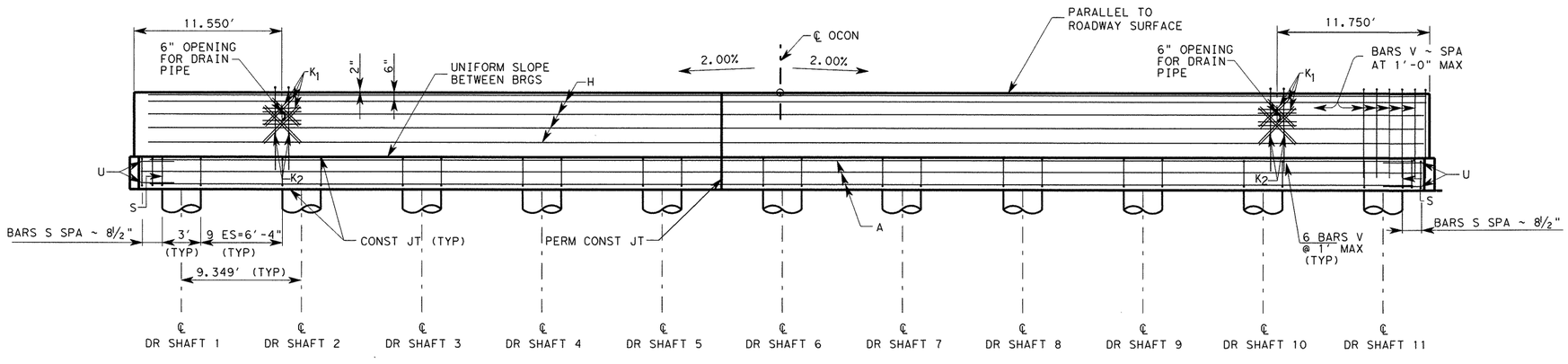

ELEVATION

STATE OF TEXAS
OSAMA A. SHAHAWY
88476
LICENSED PROFESSIONAL ENGINEER
4/11/11

HL-93 LOADING

REV. No.	DATE	REVISION	BY
△			
△			
△			

PBSJ an Atkins company TBPE REG. # F-474

Texas Department of Transportation
Austin District
©2011 by TxDOT

SH 45 / O'CONNOR DRIVE
O'CONNOR DRIVE
ABUTMENT 3

SCALE: NTS — SHEET 2 OF 3

DESIGNED: RBR	FED. RD DIV. No.	STATE	PROJECT No.			HIGHWAY No.
CHECKED: OAS	6	TEXAS				LP 1/SH 45
DRAWN: RBR	STATE DISTRICT	COUNTY	CONTROL No.	SECTION No.	JOB No.	SHEET No.
CHECKED: OAS	AUSTIN	WILLIAMSON	0683	06	027	327

DATE: 4/11/2011 TIME: 10:34:26 AM

PLOT DRIVER: RD*11x17*PDF.plt
PEN TABLE: plotordr*ocon.tbl
FILE: r:\trans-design\o'connor\cadd\bdg\OCONNOC45ABocon02.dgn

TABLE OF ESTIMATED QUANTITIES (ABUT 1)				
BAR	NO.	SIZE	LENGTH	WEIGHT
A △	10	#11	118'-11"	6,316
H □	10	#5	107'-11"	1,125
P	12	#5	5'-9"	72
R	12	#4	3'-1"	25
S	114	#4	11'-2"	850
U	4	#6	8'-0"	48
V	107	#5	14'-7"	1,623
REINFORCING STEEL			LB	10,059
CLASS "C" CONCRETE			CY	53.3
DRILLED SHAFT			LF	

△ INCLUDES 1 ~ 12'-5" LAP SPLICE
□ INCLUDES 1 ~ 2'-8" LAP SPLICE

TABLE OF ESTIMATED QUANTITIES (ABUT 3)				
BAR	NO.	SIZE	LENGTH	WEIGHT
A △	10	#11	116'-8"	6,199
H □	10	#5	105'-8"	1,102
P	12	#5	5'-9"	72
R	12	#4	3'-1"	25
S	116	#4	11'-2"	865
U	4	#6	8'-0"	48
V	105	#5	14'-7"	1,593
REINFORCING STEEL			LB	9,904
CLASS "C" CONCRETE			CY	51.7
DRILLED SHAFT			LF	

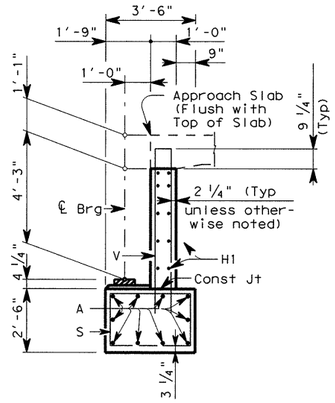

SECTION A-A

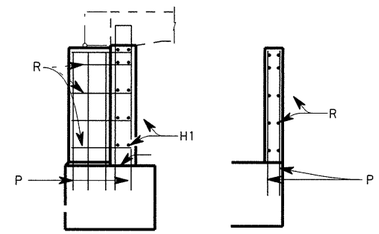

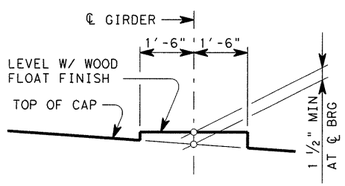

BEARING SEAT DETAIL

(BEARING SURFACE SHALL BE CLEAN AND FREE OF ALL LOOSE MATERIAL BEFORE PLACING BEARING PAD.)

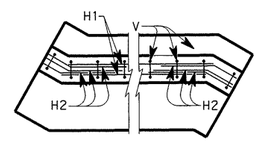

BACKWALL

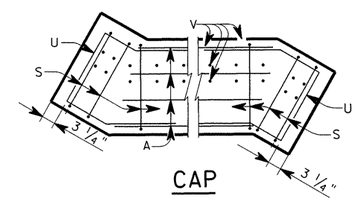

CAP

CORNER DETAILS

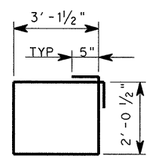

BARS S

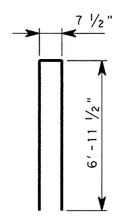

BARS V

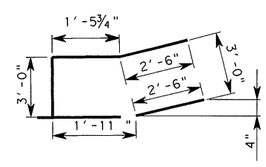

BARS U

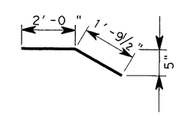

BARS H 2

HL-93 LOADING

STATE OF TEXAS
OSAMA A. SHAHAWY
88476
LICENSED PROFESSIONAL ENGINEER
4/11/11

REV. No.	DATE	REVISION	BY
△			
△			
△			

PBSJ an Atkins company TBPE REG. # F-474

Texas Department of Transportation
Austin District
©2011 by TxDOT

SH 45 / O'CONNOR DRIVE
O'CONNOR DRIVE
ABUTMENT 1 & 3
DETAILS

SCALE: NTS SHEET 3 OF 3

DESIGNED: RBR	FED. RD DIV. No.	STATE	PROJECT No.			HIGHWAY No.	
CHECKED: OAS	6	TEXAS				LP 1/SH 45	
DRAWN: RBR	STATE DISTRICT	COUNTY	CONTROL No.	SECTION No.	JOB No.	SHEET No.	
CHECKED: OAS	AUSTIN	WILLIAMSON	0683	06	027	328	

DATE: 4/11/2011 TIME: 10:34:27 AM
PLOT DRIVER: RD*11x17*PDF.plt
PEN TABLE: plotordr*ocon.tbl
FILE: r:\trans-design\o connor\oadd\bdg\OCONN\0C45ABocon03.dgn

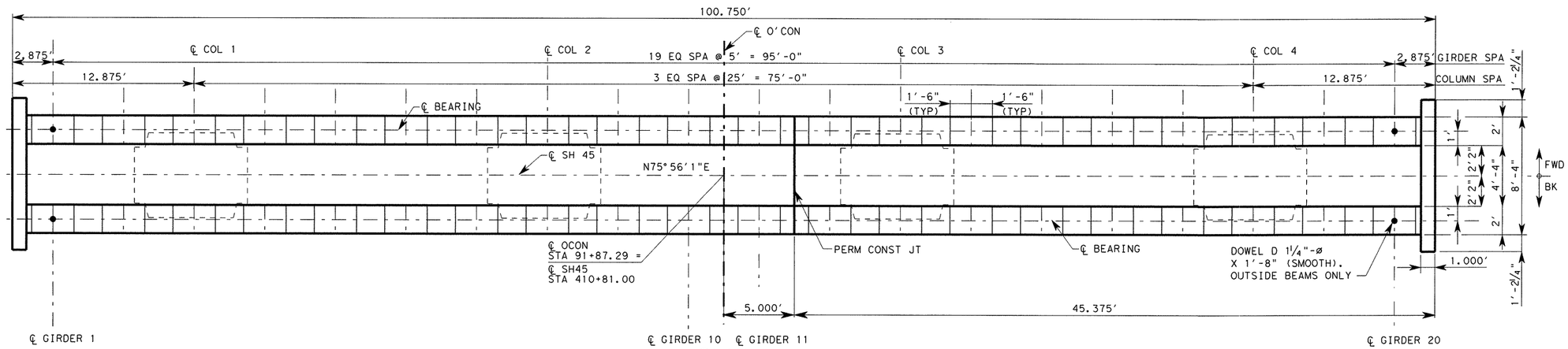

PLAN

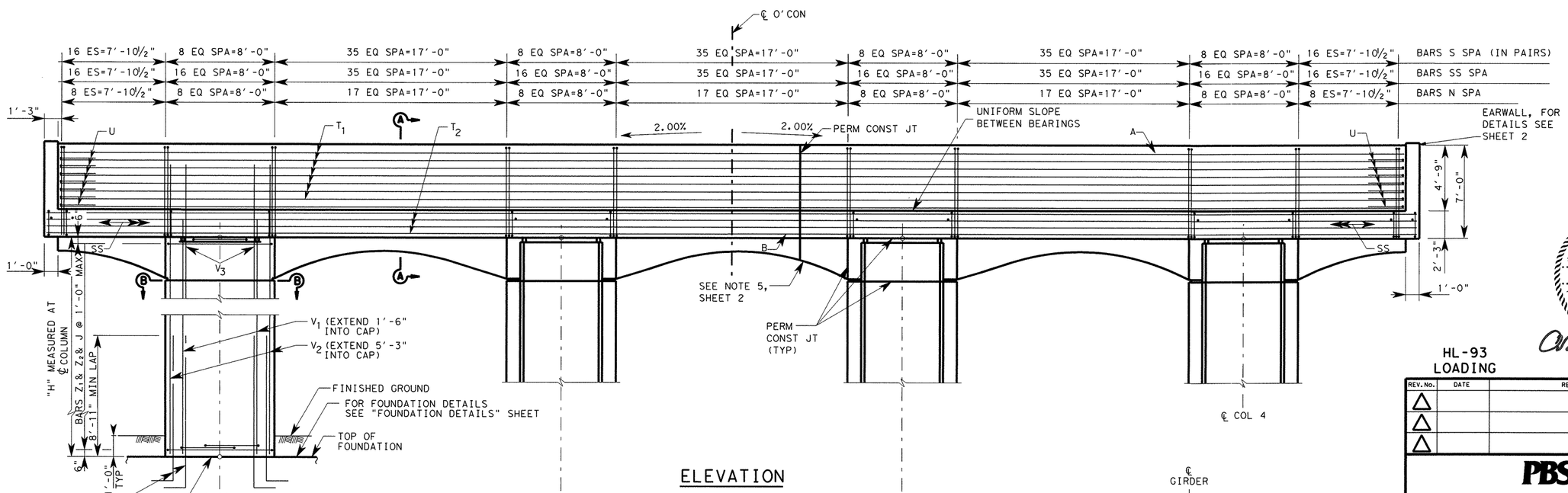

ELEVATION

HL-93 LOADING

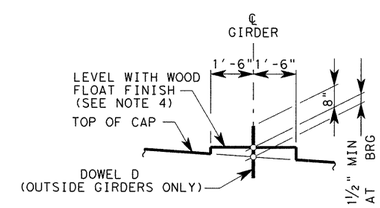

BEARING SEAT ELEVATION

STATE OF TEXAS
OSAMA A. SHAHAWY
88476
LICENSED PROFESSIONAL ENGINEER
4/11/11

REV. No.	DATE	REVISION	BY
△			
△			
△			

PBSJ an Atkins company TBPE REG. # F-474

Texas Department of Transportation
Austin District
©2011 by TxDOT

SH 45 / O'CONNOR DRIVE
O'CONNOR DRIVE
BENT 2

SCALE: NTS

SHEET 1 OF 2

DESIGNED: RBR	FED. RD DIV. No.	STATE	PROJECT No.			HIGHWAY No.
CHECKED: OAS	6	TEXAS				LP 1/SH 45
DRAWN: RBR	STATE DISTRICT	COUNTY	CONTROL No.	SECTION No.	JOB No.	SHEET No.
CHECKED: OAS	AUSTIN	WILLIAMSON	0683	06	027	329

DATE: 4/11/2011 TIME: 10:34:28 AM
PLOT DRIVER: RD*11x17*PDF.plt
PEN TABLE: plotordr*ocon.tbl
FILE: r:\trans-design\oconnor\cadd\bdg\OCONVOC45BTocon01.dgn

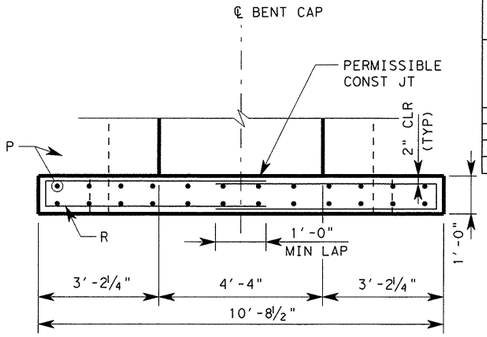

PLAN

TABLE OF VARIABLES COLUMN QUANTITIES

COL	COLUMN HEIGHT "H"	BARS V_1 #11 NO.	BARS V_1 #11 LENGTH	BARS V_1 #11 WEIGHT (LB)	BARS V_2 #11 NO.	BARS V_2 #11 LENGTH	BARS V_2 #11 WEIGHT (LB)	BARS V_3 #8 NO.	BARS V_3 #8 LENGTH	BARS V_3 #8 WEIGHT (LB)	BARS Z_1 #5 18'-8" NO.	BARS Z_1 WEIGHT (LB)	BARS Z_2 #5 22'-4" NO.	BARS Z_2 WEIGHT (LB)	BARS J #4 8'-5" NO.	BARS J WEIGHT (LB)	TOTAL ESTIMATED QUANTITIES PER COLUMN: REINF STEEL LB	TOTAL ESTIMATED QUANTITIES PER COLUMN: CLASS "C" (MASS) CONC (BENT) CY
1	22	16	23'-6"	1998	24	27'-3"	3475	16	10'-6"	449	46	876	23	536	23	129	7463	35.44
2	22	16	23'-6"	1998	24	27'-3"	3475	16	10'-6"	449	46	876	23	536	23	129	7463	35.44
3	22	16	23'-6"	1998	24	27'-3"	3475	16	10'-6"	449	46	876	23	536	23	129	7463	35.44
4	22	16	23'-6"	1998	24	27'-3"	3475	16	10'-6"	449	46	876	23	536	23	129	7463	35.44

* FOR CONTRACTOR'S INFORMATION ONLY

(1) ADJUST BARS V_1 AND V_2 LENGTHS BY 1 FT, NUMBER OF BARS Z_2 AND J BY 1, AND NUMBER OF BARS Z_1 BY 2 FOR EACH 1 LF VARIATION IN "H" VALUE.

(2) ADJUST REINFORCING STEEL TOTAL BY 273 LB AND CLASS "C" CONC BY 1.3148 CY FOR EACH 1 LF VARIATION IN "H" VALUE.

TABLE OF ESTIMATED QUANTITIES (BENT CAP)

BAR	NO.	SIZE	LENGTH	WEIGHT
△ A	11	#11	111'-1"	6,492
◇ B	9	#11	107'-7"	5,144
N	100	#6	7'-7"	1,139
P	48	#5	6'-1"	305
R	24	#4	12'-1"	194
S	404	#5	19'-3"	8,111
SS	202	#6	20'-6"	6,216
□ T1	14	#6	100'-1"	2,105
□ T2	8	#6	101'-11"	1,225
U	14	#6	9'-0"	189
REINFORCING STEEL*			LB	31,120
CLASS "C" (MASS) CONC (BENT)			CY	145.3

ARCH REINFORCING STEEL	LB	2,671
ARCH CONC	CY	16.2

* FOR CONTRACTOR'S INFORMATION ONLY
△ INCLUDES 1 ~ 12'-5" LAP SPLICE
◇ INCLUDES 1 ~ 7'-2" LAP SPLICE
□ INCLUDES 1 ~ 2'-8" LAP SPLICE

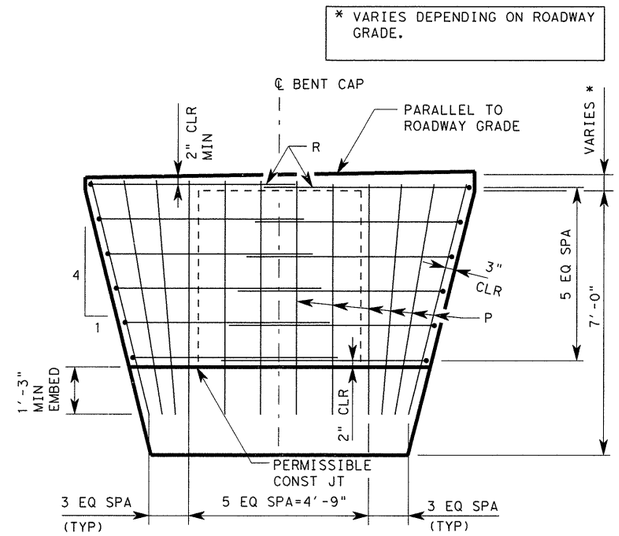

ELEVATION

EARWALL DETAIL

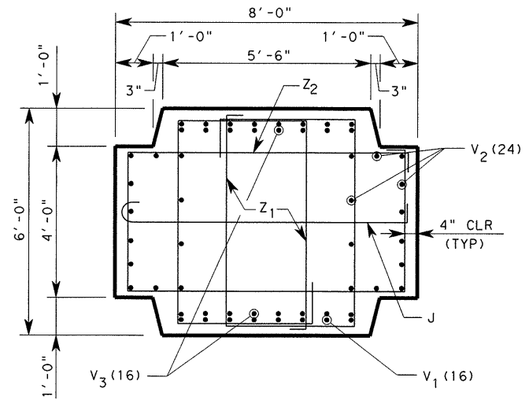

SECTION B-B

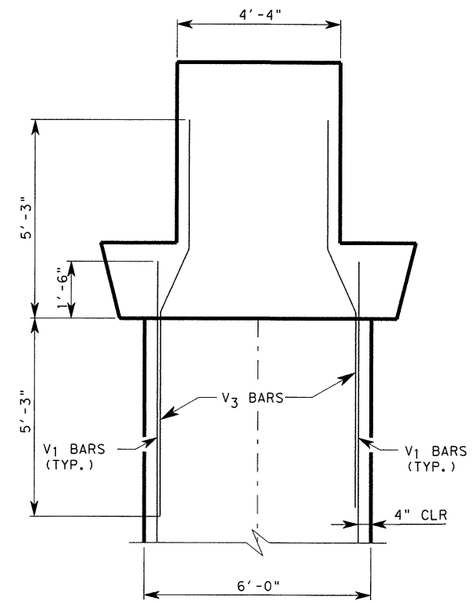

SECTION C-C

(CAP REINFORCEMENT NOT SHOWN FOR CLARITY)

NOTES:

1. DESIGNED ACCORDING TO AASHTO LRFD BRIDGE DESIGN SPECIFICATIONS, 4TH EDITION, 2007 AND 2009 CURRENT INTERIMS FOR HL-93 LOADING.
2. CONCRETE STRENGTH F'C=3600 PSI.
3. ALL REINFORCING SHALL BE GRADE 60.
4. BEARING SURFACE SHALL BE CLEAN AND FREE OF ALL LOOSE MATERIAL BEFORE PLACING BEARING PAD.
5. SEE "AESTHETIC TREATMENT REINFORCEMENT DETAILS" SHEET FOR ARCH REINFORCEMENT AND AESTHETIC REVEAL DETAIL.

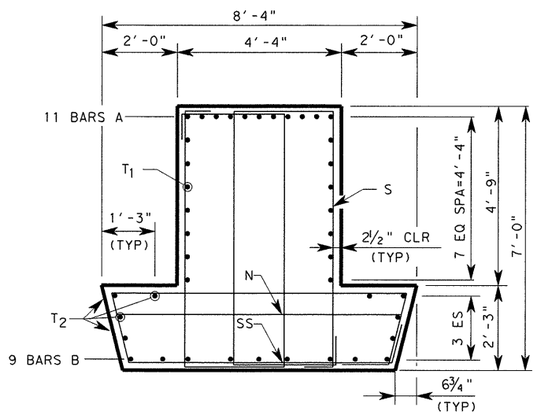

SECTION A-A

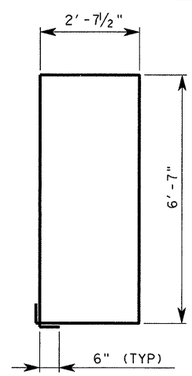

BARS S

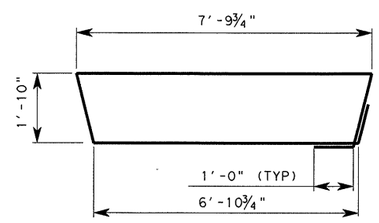

BARS SS

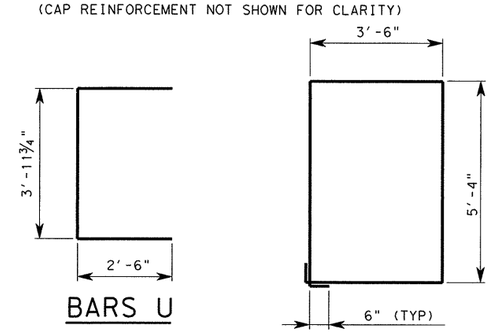

BARS U

BARS Z1

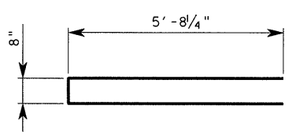

BARS R

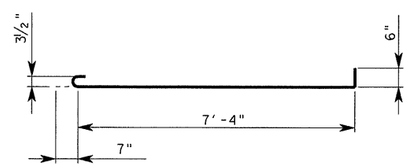

BARS J

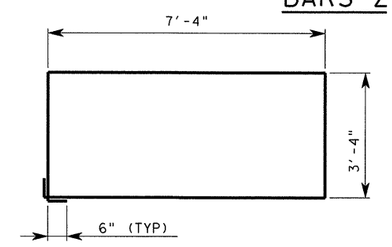

BARS Z2

Rev. 6/29/11

HL-93 LOADING

STATE OF TEXAS
OSAMA A. SHAHAWY
88476
LICENSED PROFESSIONAL ENGINEER
6/7/11

REV. No.	DATE	REVISION	BY
△			
△			
△			

PBSJ an Atkins company TBPE REG. # F-474

Texas Department of Transportation
Austin District
©2011 by TxDOT

SH 45 / O'CONNOR DRIVE
O'CONNOR DRIVE
BENT 2

SCALE: NTS — SHEET 2 OF 2

DESIGNED: RBR	FED. RD DIV. No.	STATE	PROJECT No.	HIGHWAY No.
CHECKED: OAS	6	TEXAS		LP 1/SH 45

DRAWN: RBR	STATE DISTRICT	COUNTY	CONTROL No.	SECTION No.	JOB No.	SHEET No.
CHECKED: OAS	AUSTIN	WILLIAMSON	0683	06	027	330

TIME: 1:37:55 PM
DATE: 6/2/2011
PLOT DRIVER: RD*11x17*PDF.plt
PEN TABLE: plotordr*ocon.tbl
FILE: r:\trans-design\o'connor\cadd\bdg\OCON\OC45BTocon02.dgn

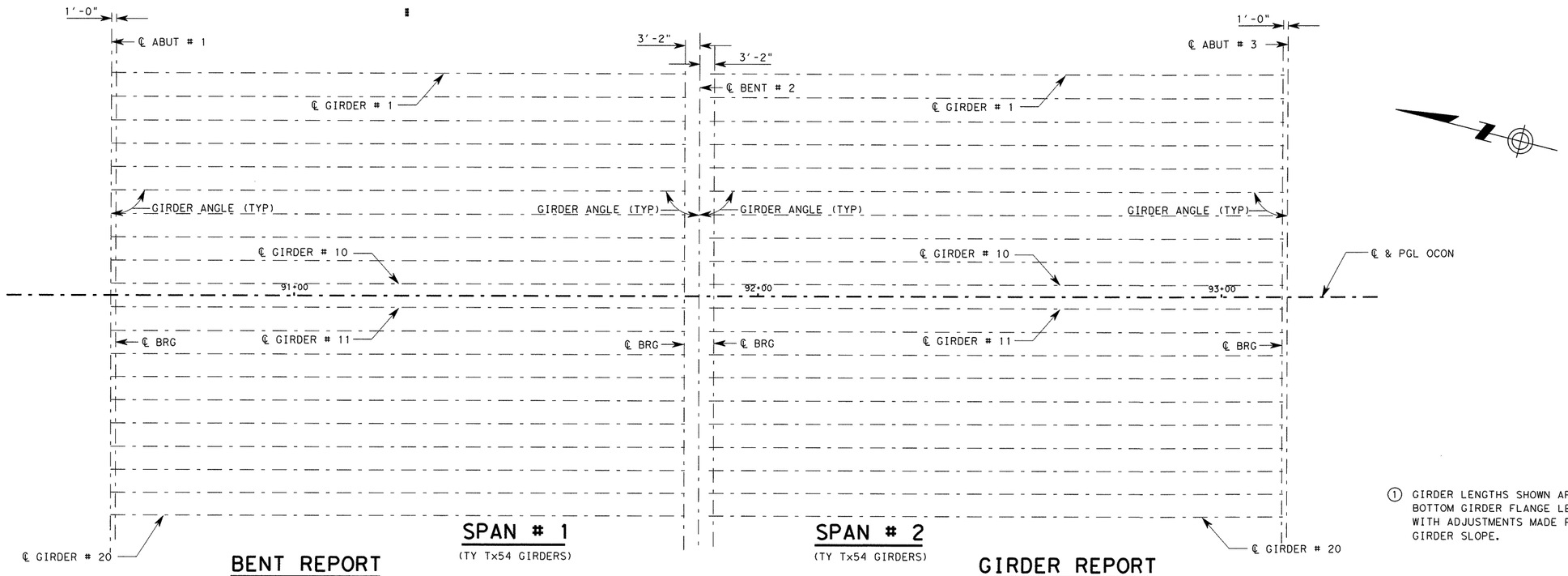

① GIRDER LENGTHS SHOWN ARE BOTTOM GIRDER FLANGE LENGTHS WITH ADJUSTMENTS MADE FOR GIRDER SLOPE.

BENT REPORT

ABUT 1 N 75 56' 01.28" E
DISTANCE BETWEEN STATION LINE AND GIRDER 1 47.5000 L

		GIRDER SPANCING (C.L. BENT	BEAM ANGLE D	M	S
SPAN 1	BEAM 1	0.000	90	00	00
	BEAM 2	5.000	90	00	00
	BEAM 3	5.000	90	00	00
	BEAM 4	5.000	90	00	00
	BEAM 5	5.000	90	00	00
	BEAM 6	5.000	90	00	00
	BEAM 7	5.000	90	00	00
	BEAM 8	5.000	90	00	00
	BEAM 9	5.000	90	00	00
	BEAM 10	5.000	90	00	00
	BEAM 11	5.000	90	00	00
	BEAM 12	5.000	90	00	00
	BEAM 13	5.000	90	00	00
	BEAM 14	5.000	90	00	00
	BEAM 15	5.000	90	00	00
	BEAM 16	5.000	90	00	00
	BEAM 17	5.000	90	00	00
	BEAM 18	5.000	90	00	00
	BEAM 19	5.000	90	00	00
	BEAM 20	5.000	90	00	00
	Total	95.000			

BENT 2 N 75 56' 01.28" E
DISTANCE BETWEEN STATION LINE AND GIRDER 1 47.5000 L

		GIRDER SPANCING (C.L. BENT	BEAM D	M	S
SPAN 1	BEAM 1	0.000	90	00	00
	BEAM 2	5.000	90	00	00
	BEAM 3	5.000	90	00	00
	BEAM 4	5.000	90	00	00
	BEAM 5	5.000	90	00	00
	BEAM 6	5.000	90	00	00
	BEAM 7	5.000	90	00	00
	BEAM 8	5.000	90	00	00
	BEAM 9	5.000	90	00	00
	BEAM 10	5.000	90	00	00
	BEAM 11	5.000	90	00	00
	BEAM 12	5.000	90	00	00
	BEAM 13	5.000	90	00	00
	BEAM 14	5.000	90	00	00
	BEAM 15	5.000	90	00	00
	BEAM 16	5.000	90	00	00
	BEAM 17	5.000	90	00	00
	BEAM 18	5.000	90	00	00
	BEAM 19	5.000	90	00	00
	BEAM 20	5.000	90	00	00
	Total	95.000			
SPAN 2	BEAM 1	0.000	90	00	00
	BEAM 2	5.000	90	00	00
	BEAM 3	5.000	90	00	00
	BEAM 4	5.000	90	00	00
	BEAM 5	5.000	90	00	00
	BEAM 6	5.000	90	00	00
	BEAM 7	5.000	90	00	00
	BEAM 8	5.000	90	00	00
	BEAM 9	5.000	90	00	00
	BEAM 10	5.000	90	00	00
	BEAM 11	5.000	90	00	00
	BEAM 12	5.000	90	00	00
	BEAM 13	5.000	90	00	00
	BEAM 14	5.000	90	00	00
	BEAM 15	5.000	90	00	00
	BEAM 16	5.000	90	00	00
	BEAM 17	5.000	90	00	00
	BEAM 18	5.000	90	00	00
	BEAM 19	5.000	90	00	00
	BEAM 20	5.000	90	00	00
	Total	95.000			

BENT 2 N 75 56' 01.28" E
DISTANCE BETWEEN STATION LINE AND GIRDER 1 47.5000 L

		GIRDER SPANCING (C.L. BENT	BEAM ANGLE D	M	S
SPAN 1	BEAM 1	0.000	90	00	00
	BEAM 2	5.000	90	00	00
	BEAM 3	5.000	90	00	00
	BEAM 4	5.000	90	00	00
	BEAM 5	5.000	90	00	00
	BEAM 6	5.000	90	00	00
	BEAM 7	5.000	90	00	00
	BEAM 8	5.000	90	00	00
	BEAM 9	5.000	90	00	00
	BEAM 10	5.000	90	00	00

GIRDER REPORT

BEAM REPORT SPAN 1

GIRDER	HORIZONTAL DISTANCE C-C BENT	C-C BEARING	TRUE BOT. BM. FLG	GIRDER SLOPE
BEAM 1	126.83	122.663	124.17	-0.01
BEAM 2	126.83	122.663	124.17	-0.01
BEAM 3	126.83	122.663	124.17	-0.01
BEAM 4	126.83	122.663	124.17	-0.01
BEAM 5	126.83	122.663	124.17	-0.01
BEAM 6	126.83	122.663	124.17	-0.01
BEAM 7	126.83	122.663	124.17	-0.01
BEAM 8	126.83	122.663	124.17	-0.01
BEAM 9	126.83	122.663	124.17	-0.01
BEAM 10	126.83	122.663	124.17	-0.01
BEAM 11	126.83	122.663	124.17	-0.01
BEAM 12	126.83	122.663	124.17	-0.01
BEAM 13	126.83	122.663	124.17	-0.01
BEAM 14	126.83	122.663	124.17	-0.01
BEAM 15	126.83	122.663	124.17	-0.01
BEAM 16	126.83	122.663	124.17	-0.01
BEAM 17	126.83	122.663	124.17	-0.01
BEAM 18	126.83	122.663	124.17	-0.01
BEAM 19	126.83	122.663	124.17	-0.01
BEAM 20	126.83	122.663	124.17	-0.01

BEAM REPORT SPAN 2

GIRDER	HORIZONTAL DISTANCE C-C BENT	C-C BEARING	TRUE BOT. BM. FLG	GIRDER SLOPE
BEAM 1	126.84	122.673	124.201	-0.021
BEAM 2	126.84	122.673	124.201	-0.021
BEAM 3	126.84	122.673	124.201	-0.021
BEAM 4	126.84	122.673	124.201	-0.021
BEAM 5	126.84	122.673	124.201	-0.021
BEAM 6	126.84	122.673	124.201	-0.021
BEAM 7	126.84	122.673	124.201	-0.021
BEAM 8	126.84	122.673	124.201	-0.021
BEAM 9	126.84	122.673	124.201	-0.021
BEAM 10	126.84	122.673	124.201	-0.021
BEAM 11	126.84	122.673	124.201	-0.021
BEAM 12	126.84	122.673	124.201	-0.021
BEAM 13	126.84	122.673	124.201	-0.021

BEAM REPORT SPAN 2

GIRDER	HORIZONTAL DISTANCE C-C BENT	C-C BEARING	TRUE BOT. BM. FLG	GIRDER SLOPE
BEAM 14	126.84	122.673	124.201	-0.021
BEAM 15	126.84	122.673	124.201	-0.021
BEAM 16	126.84	122.673	124.201	-0.021
BEAM 17	126.84	122.673	124.201	-0.021
BEAM 18	126.84	122.673	124.201	-0.021
BEAM 19	126.84	122.673	124.201	-0.021
BEAM 20	126.84	122.673	124.201	-0.021

STATE OF TEXAS
OSAMA A. SHAHAWY
88476
LICENSED PROFESSIONAL ENGINEER
4/11/11

HL-93 LOADING

REV. No.	DATE	REVISION	BY
△			
△			
△			

PBSJ an Atkins company TBPE REG. # F-474

Texas Department of Transportation
Austin District
©2011 by TxDOT

SH 45 / O'CONNOR DRIVE
O'CONNOR DRIVE
I-GIRDER LAYOUT
(SPANS 1-2)

SCALE: 1"=25' SHEET 1 OF 1

DESIGNED: RBR	FED. RD DIV. No.	STATE	PROJECT No.		HIGHWAY No.	
CHECKED: OAS	6	TEXAS			LP 1/SH 45	
DRAWN: RBR	STATE DISTRICT	COUNTY	CONTROL No.	SECTION No.	JOB No.	SHEET No.
CHECKED: OAS	AUSTIN	WILLIAMSON	0683	06	027	331

DATE: 4/11/2011 TIME: 10:34:31 AM
PLOT DRIVER: RD*11x17*PDF.plt
PEN TABLE: plotordr*ocon.tbl
FILE: r:\trans-design\oconnor\cadd\bdg\OCON\OC45GLocon.dgn

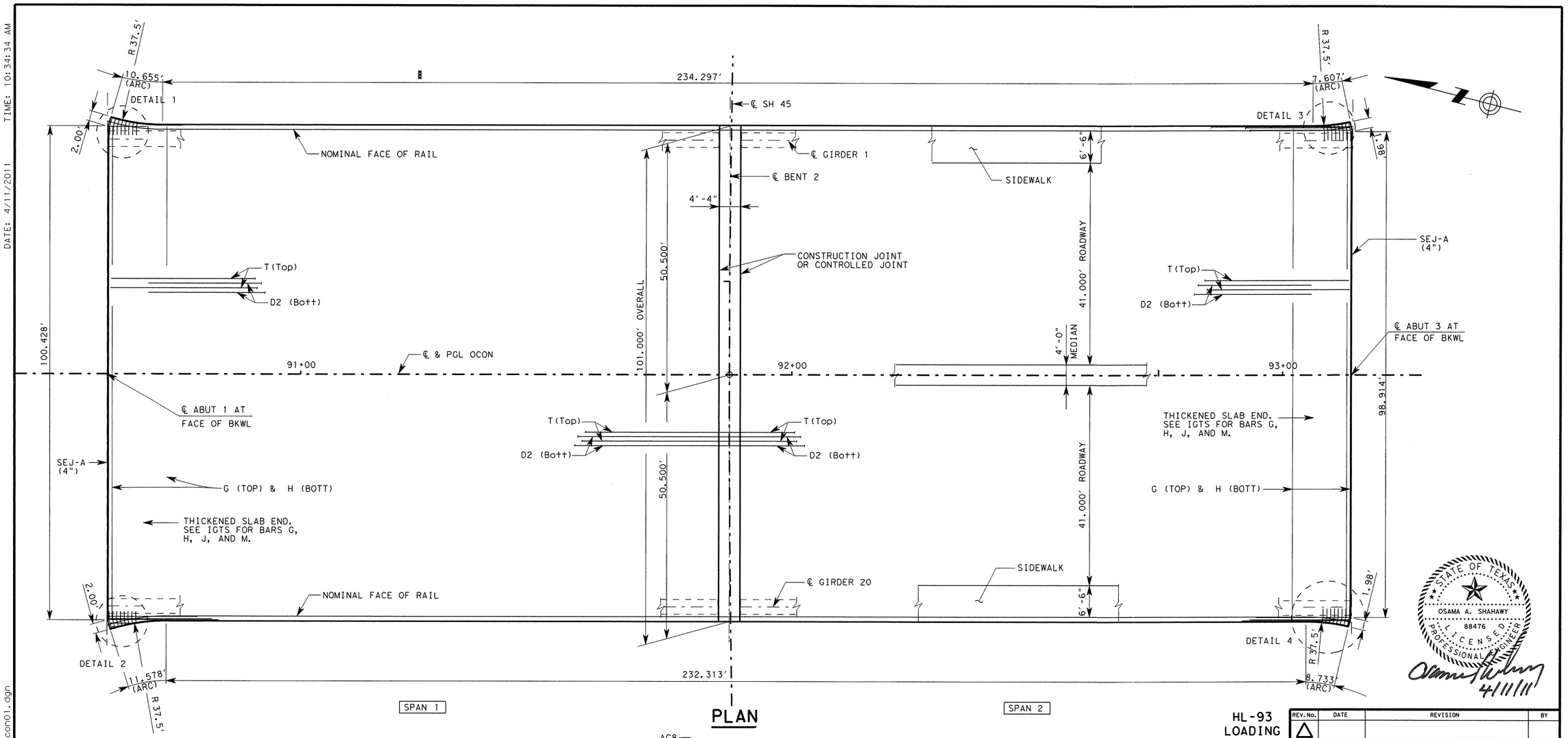

PLAN

HL-93 LOADING

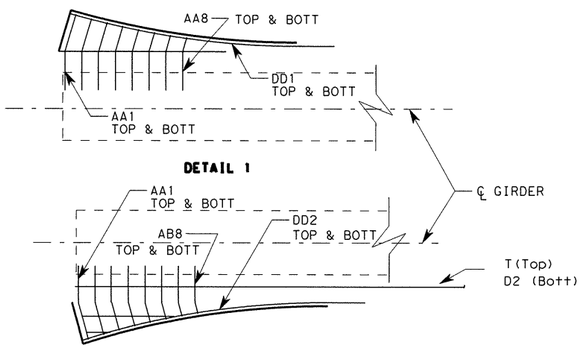

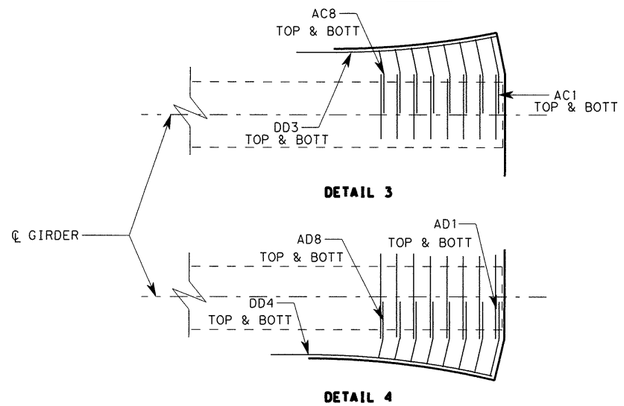

GENERAL NOTES:

1. DESIGNED ACCORDING TO AASHTO LRFD BRIDGE DESIGN SPECIFICATIONS, 4TH EDITION, 2007 AND 2009 CURRENT INTERIMS FOR HL-93 LOADING.
2. SEE IGTS STANDARD FOR THICKENED SLAB END DETAIL AND QUANTITY ADJUSTMENT
3. SEE PCP (C) OR PMDF (C) STANDARDS FOR DETAILS AND QUANTITY ADJUSTMENT IF EITHER OF THESE OPTIONS ARE USED.
4. ALL REINFORCING SHOULD BE GRADE 60.
5. CONCRETE STRENGTH F'C = 4,000 PSI
6. BAR LAPS, WHERE REQUIRED, SHALL BE AS FOLLOWS:
   #4 = 1'-5"
   #5 = 1'-9"
7. SEE TXDOT MISC SLAB DETAIL "IGMS (MOD)" FOR ADD'L SLAB DETAILS AND REINFORCEMENT OVER INVERTED-T BENTS.
8. MEDIAN & SIDEWALK CONCRETE SUBSIDIARY TO CLASS S CONCRETE.
9. SEE TXDOT STANDARD "IGCS" FOR CONTINUOUS SLAB DETAILS.
10. FOR DECK DRAIN LOCATION AND REINFORCEMENT DETAILS, SEE BRIDGE LAYOUT SHEETS AND BRIDGE DRAIN DETAIL SHEETS.

STATE OF TEXAS
OSAMA A. SHAHAWY
88476
LICENSED
PROFESSIONAL ENGINEER
4/11/11

REV. No.	DATE	REVISION	BY
△			
△			
△			

PBSJ an Atkins company TBPE REG. # F-474

Texas Department of Transportation
Austin District
©2011 by TxDOT

SH 45 / O'CONNOR DRIVE
O'CONNOR DRIVE
253.67' PRESTRESS CONC I-GIRDER UNIT (SPANS 1-2)

SCALE: NTS — SHEET 1 OF 2

DESIGNED: SS	FED. RD DIV. No.	STATE	PROJECT No.			HIGHWAY No.	
CHECKED: OS	6	TEXAS				LP 1/SH 45	
DRAWN: BR	STATE DISTRICT	COUNTY	CONTROL No.	SECTION No.	JOB No.	SHEET No.	
CHECKED: OS	AUSTIN	WILLIAMSON	0683	06	027	332	

DATE: 4/11/2011 TIME: 10:34:34 AM

PLOT DRIVER: RD*11x17*PDF.plt
PEN TABLE: plotordr*ocon.tbl
FILE: r:\trans-design\o'connor\cadd\bdg\OCON\0C456Socon01.dgn

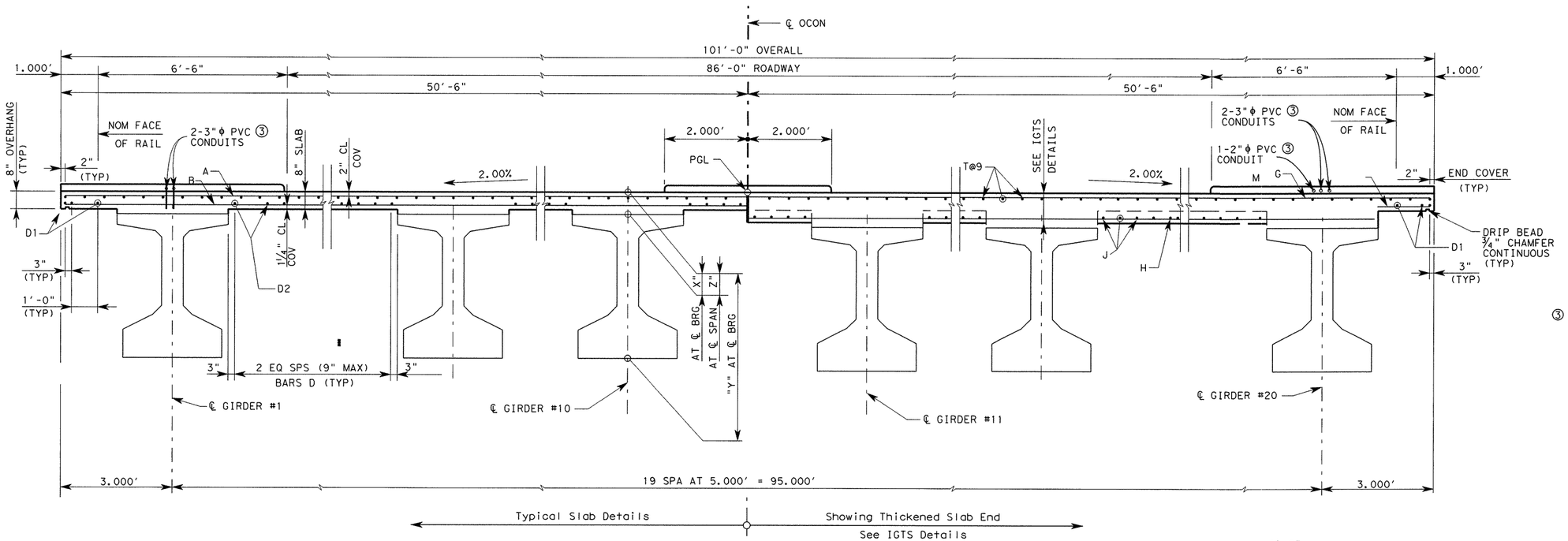

TYPICAL TRANSVERSE SECTION

BAR TABLE	
BAR	SIZE
A	#6
B	#6
AA	#5
AB	#5
AC	#5
AD	#5
DD	#5
G	#5
H	#5
J	#5
M	#5
T	#4
W	#4
X	#4

③ CONDUITS FOR TRAFFIC SIGNALS, VIVDS AND ILLUMINATION FUTURE USE

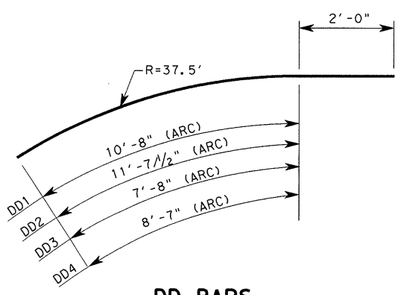

DD BARS

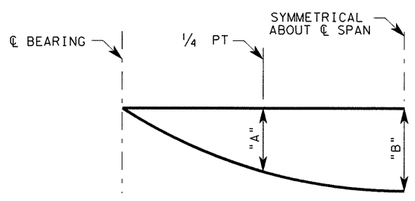

NOTE: DEFLECTIONS SHOWN ARE DUE TO CONCRETE SLAB ONLY. ($E_c = 5 \times 10^6$ PSI) CALCULATED DEFLECTIONS SHOWN ARE THEORETICAL. ACTUAL DIMENSIONS MAY BE LESS. DEFLECTIONS SHALL BE ADJUSTED BASED ON FIELD OBSERVATIONS

DEAD LOAD DEFLECTION DIAGRAM

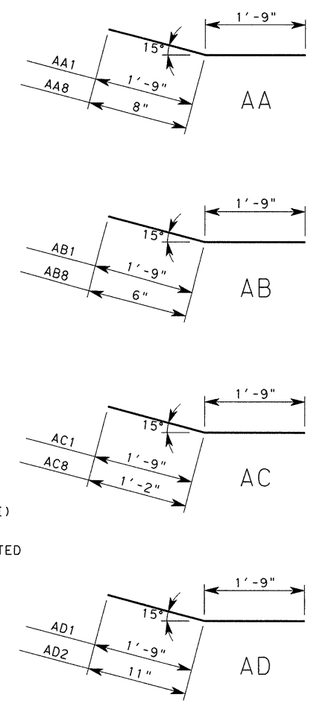

TABLE OF DEAD LOAD DEFLECTIONS			
SPAN	GIRDER NO	"A"	"B"
Span 1	1,20	0.160	0.198
Span 1	2-19	0.149	0.184
Span 2	1,20	0.150	0.185
Span 2	2-19	0.138	0.171

TABLE OF SECTION DEPTHS			
SPAN NO.	"X" AT ℄ BRG	"Y" AT ℄ BRG	"Z" AT ℄ SPAN
1	9	5'-3"	8½"
2	9	5'-3"	8½"

TABLE OF ESTIMATED QUANTITIES				
SPAN	REINF CONCRETE SLAB	①PRESTR CONCRETE GIRDERS (TY Tx54)	CLASS "S" CONCRETE	② TOTAL REINF STEEL
	SF	LF	CY	LB
1	11,832	2,483.40	295	76,908
2	11,817	2,484.00	294	67,811
TOTAL	23,649	4,967.40	589	153,719

① LENGTHS SHOWN ARE BOTTOM FLANGE LENGTHS WITH ADJUSTMENTS MADE FOR GIRDER SLOPE.

② REINFORCING STEEL WEIGHT IS CALCULATED USING AN APPROXIMATE FACTOR OF 6.5 LB/SF.

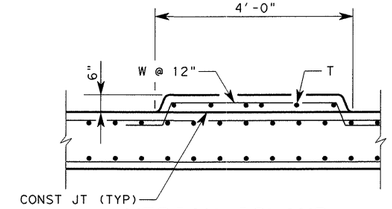

MEDIAN ISLAND

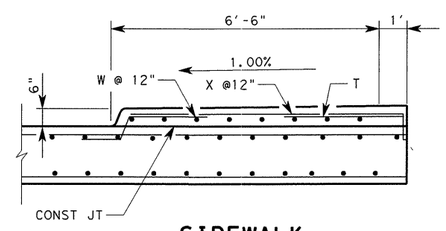

SIDEWALK

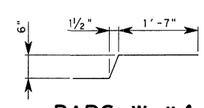

BARS W~#4

HL-93 LOADING

STATE OF TEXAS
OSAMA A. SHAHAWY
88476
LICENSED PROFESSIONAL ENGINEER
4/11/11

REV. No.	DATE	REVISION	BY
△			
△			
△			

PBSJ an Atkins company TBPE REG. # F-474

Texas Department of Transportation Austin District

©2011 by TxDOT

SH 45 / O'CONNOR DRIVE
O'CONNOR DRIVE
253.67' PRESTRESS CONC I-GIRDER UNIT (SPANS 1-2)

SCALE: NTS

SHEET 2 OF 2

DESIGNED: SS	FED. RD DIV. No.	STATE	PROJECT No.			HIGHWAY No.
CHECKED: OS	6	TEXAS				LP 1/SH 45
DRAWN: BR	STATE DISTRICT	COUNTY	CONTROL No.	SECTION No.	JOB No.	SHEET No.
CHECKED: OS	AUSTIN	WILLIAMSON	0683	06	027	333

PLOT DRIVER: RD*11x17*PDF.plt
PEN TABLE: plotordr*ocon.tbl
FILE: r:\trans-design\o'connor\oadd\bdg\OCON\0C45GSocon02.dgn
DATE: 4/11/2011 TIME: 10:34:35 AM

DESIGNED GIRDERS (DEPRESSED STRANDS)

STRUCTURE	SPAN NO.	GIRDER NO.	GIRDER TYPE	NON-STD STRAND PATTERN	PRESTRESSING STRANDS TOTAL NO.	SIZE	STRGTH fpu (ksi)	"e" ℄	"e" END	DEPRESSED NO.	DEPRESSED TO	CONCRETE RELEASE STRGTH f'ci (ksi)	CONCRETE MINIMUM 28 DAY COMP STRGTH f'c (ksi)
O'Connor Bridge	1	1,20	Tx54		74	1/2	270	15.873	7.76	20	50.5	6.500	7.800
		2,3	Tx54		68	1/2	270	16.83	9.83	14	48.5	6.400	6.800
		4-17	Tx54		56	1/2	270	17.93	11.51	10	46.5	5.600	6.400
		18,19	Tx54		68	1/2	270	16.83	9.83	14	48.5	6.400	6.800
	2	1,20	Tx54		72	1/2	270	16.23	8.73	18	48.5	6.400	7.100
		2,3	Tx54		66	1/2	270	17.07	10.52	12	48.5	6.300	6.600
		4-17	Tx54		54	1/2	270	18.12	11.89	8	50.5	5.500	6.200
		18,19	Tx54		66	1/2	270	17.07	10.52	12	48.5	6.300	6.600

OPTIONAL DESIGN

DESIGN LOAD COMP STRESS (TOP ℄) (SERVICE I) fct (ksi)	DESIGN LOAD TENSILE STRESS (BOTT ℄) (SERVICE III) fcb (ksi)	REQUIRED MINIMUM ULTIMATE MOMENT CAPACITY (STRENGTH I) (ft-kips)	LIVE LOAD DISTRIB FACTOR ①
4.688	-4.517	8602.090	0.500
4.506	-4.336	8190.160	0.453
4.244	-3.836	7027.800	0.453
4.506	-4.336	8190.160	0.453
4.576	-4.430	8487.690	0.500
4.394	-4.250	8075.650	0.453
4.131	-3.750	6913.090	0.453
4.394	-4.250	8075.650	0.453

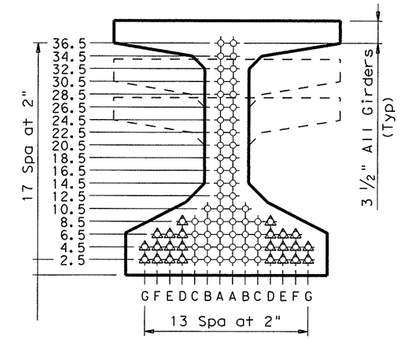

TYPE Tx28, Tx34 & Tx40 ②

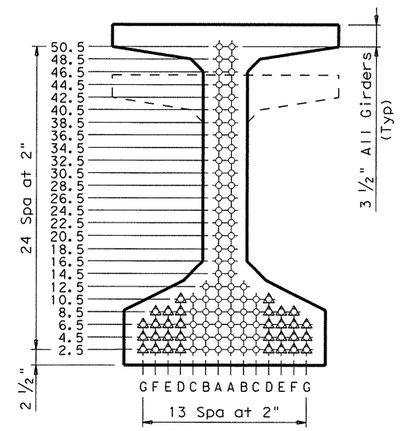

TYPE Tx46 & Tx54 ②

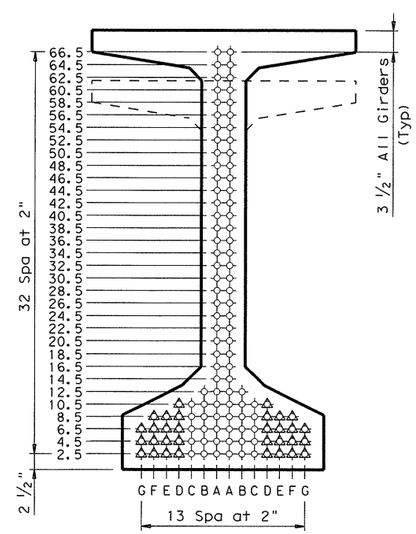

TYPE Tx62 & Tx70 ②

① Portion of full HL93

② Full-length debonded strands are only permitted in strand positions marked Δ. Double wrap full-length debonded strands in outermost position of each row. Full-length debonding must comply with Item 426.4.F.4.

NON-STANDARD STRAND PATTERNS

PATTERN	STRAND ARRANGEMENT AT ℄ OF GIRDER

GENERAL NOTES:

Designed in accordance with AASHTO LRFD Specifications.

All concrete must be Class H. Provide Class H(HPC) if shown elsewhere in plans. All reinforcing bars must be Grade 60.

When shown on this sheet, the Fabricator has the option of furnishing either the designed depressed strand girder or an approved optional design. All optional design submittals must be signed, sealed and dated by a registered Professional Engineer.

Optional designs for girders 120 feet or longer must have a calculated residual camber equal to or greater than that of the designed girder.

Prestress losses for the designed girders have been calculated for a relative humidity of 65 percent. Optional designs must likewise conform.

For depressed strand designed girders, strands must be located as low as possible on the 2" grid system unless a Non-Standard Strand Pattern is indicated. Fill row "2.5", then row "4.5", then row "6.5", etc., beginning each row in the "A" position and working outward until the required number of strands is reached. All strands in the "A" position must be depressed, maintaining the 2" spacing so that, at the girder ends, the upper two strands are in the position shown in the table.

Strands for the designed girder must be low relaxation strands pretensioned to 75 percent of fpu each.

Seal cracks in girder ends exceeding 0.005" in width as directed by the Engineer. The fabricator is permitted to decrease the spacing of Bars R and S by providing additional bars to help limit crack width provided the decreased spacing results in no less than 1" clear between bars. The fabricator must take an approved corrective action if cracks greater than 0.005" form on a repetitive basis.

STATE OF TEXAS
OSAMA A. SHAHAWY
88476
LICENSED
PROFESSIONAL ENGINEER
6/7/11

HL93 LOADING

Texas Department of Transportation
Bridge Division

PRESTRESSED CONCRETE I-GIRDER DESIGNS (NON-STANDARD SPANS)

IGND

FILE: igndstel.dgn	DN: TxDOT	CK: TxDOT	DW: TxDOT	CK: TxDOT
©TxDOT June 2007	DISTRICT	FEDERAL AID PROJECT		SHEET
REVISIONS 02/09: General Notes. 10/09: General Notes.	AUSTIN			334
	COUNTY		CONTROL-SECT-JOB	HIGHWAY
	WILLIAMSON		0683-06-027	SH 45 LOOP 1

Rev. 6/29/11

DISCLAIMER:
The use of this standard is governed by the "Texas Engineering Practice Act". No warranty of any kind is made by TxDOT for any purpose whatsoever. TxDOT assumes no responsibility for the conversion of this standard to other formats or for incorrect results or damages resulting from its use.

LEVELS DISPLAYED
1 2 3 4 5 6 7 8 9 10 11 12 13 14 15 16
17 18 19 20 21 22 23 24 25 26 27 28 29 30 31 32
33 34 35 36 37 38 39 40 41 42 43 44 45 46 47 48
49 50 51 52 53 54 55 56 57 58 59 60 61 62 63

ACC:

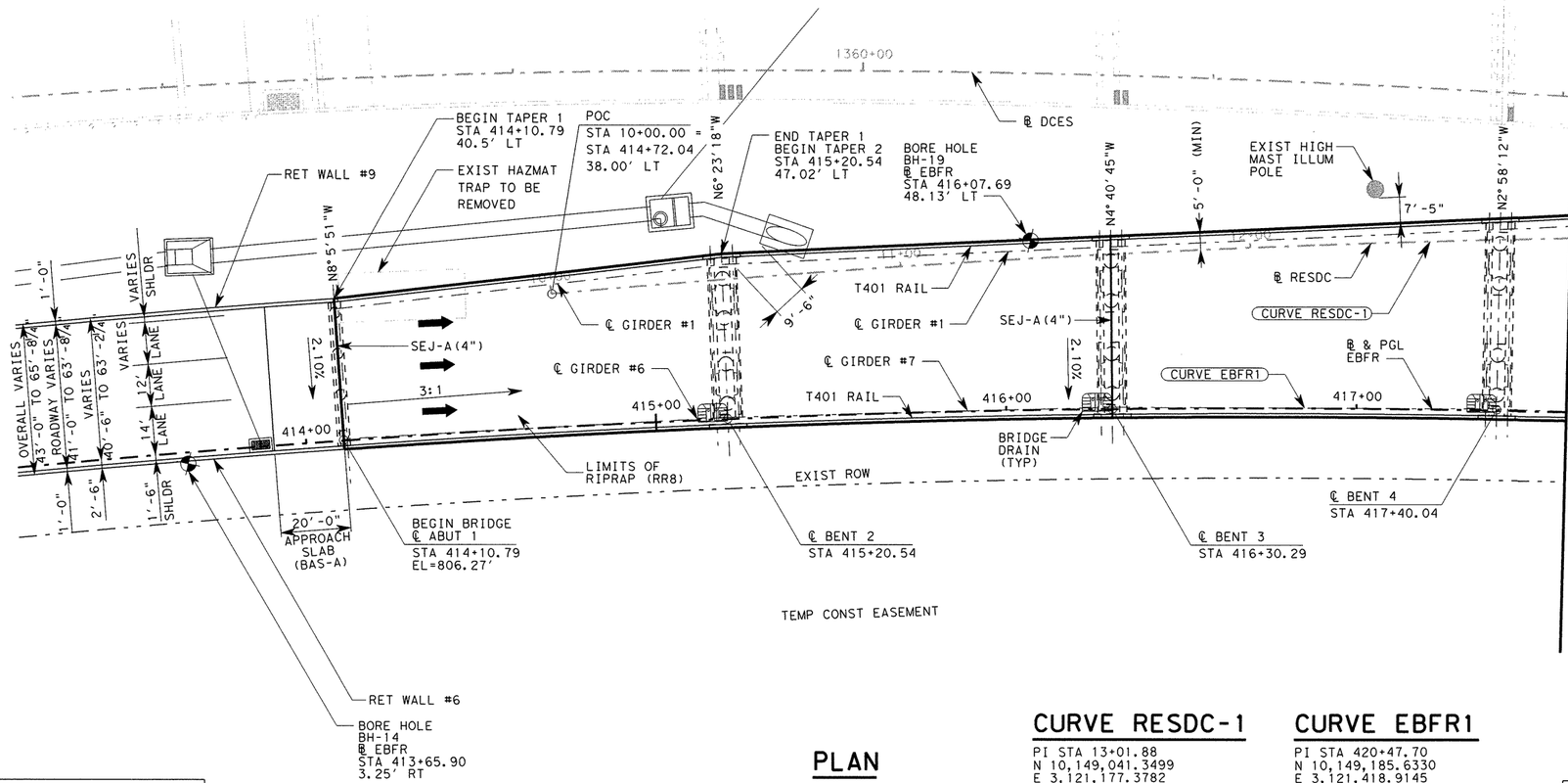

PLAN

HYDRAULIC DATA		
		100 YR
Q	CFS	7857
V	FT/SEC	0.65

CURVE RESDC-1

PI STA 13+01.88
N 10,149,041.3499
E 3,121,177.3782
Δ = 8°20'46" (RT)
T = 301.88'
L = 602.70'
R = 4,137.55'
PC STA 10+00.00
PT STA 16+02.70

CURVE EBFR1

PI STA 420+47.70
N 10,149,185.6330
E 3,121,418.9145
Δ = 37°09'28" (RT)
T = 1,236.69'
L = 2,386.07'
R = 3,679.23'
PC STA 408+11.01
PT STA 431+97.08

DESIGN SPEED: 40 MPH
ADT: 23,100 (2040)
RFC:
URBAN - PRINCIPAL ARTERIAL
NBI: 14-246-0-0683-06-483

GENERAL NOTES:

1. DESIGNED ACCORDING TO AASHTO LRFD BRIDGE DESIGN SPECIFICATIONS, 4TH EDITION, 2007 AND CURRENT INTERIM'S FOR HL-93 LOADING.
2. FOR BORING LOGS, SEE "BORING LOGS" SHEETS.
3. DRILLED SHAFTS ARE DESIGNED WITH POINT BEARING AND SKIN FRICTION TO BE FOUNDED AT ELEVATIONS SHOWN OR LOWER AS NECESSARY TO PENETRATE A MINIMUM OF ONE SHAFT DIAMETER INTO UNWEATHERED LIMESTONE.
4. "H" - HEIGHTS SHOWN ARE APPROXIMATE. ACTUAL COLUMN HEIGHT SHALL BE FIELD VERIFIED PRIOR TO CONSTRUCTION.
5. CONTRACTOR TO USE CASING FOR ALL DRILLED SHAFTS. CASING SHALL REMAIN IN PLACE AFTER CASTING.
6. FOR CRASH CUSHION AND ATTACHMENT DETAILS, SEE TXDOT STANDARD SHEET "QUAD (N)-10".
7. FURNISH AND INSTALL 2 - 2" DIA. PVC CONDUITS IN EACH BRIDGE RAIL.

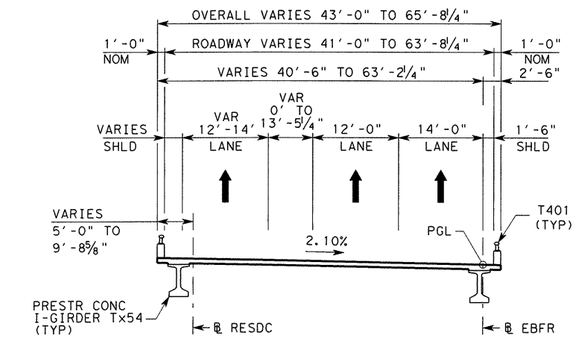

TYPICAL SECTION

(SPANS 1-4)
NTS

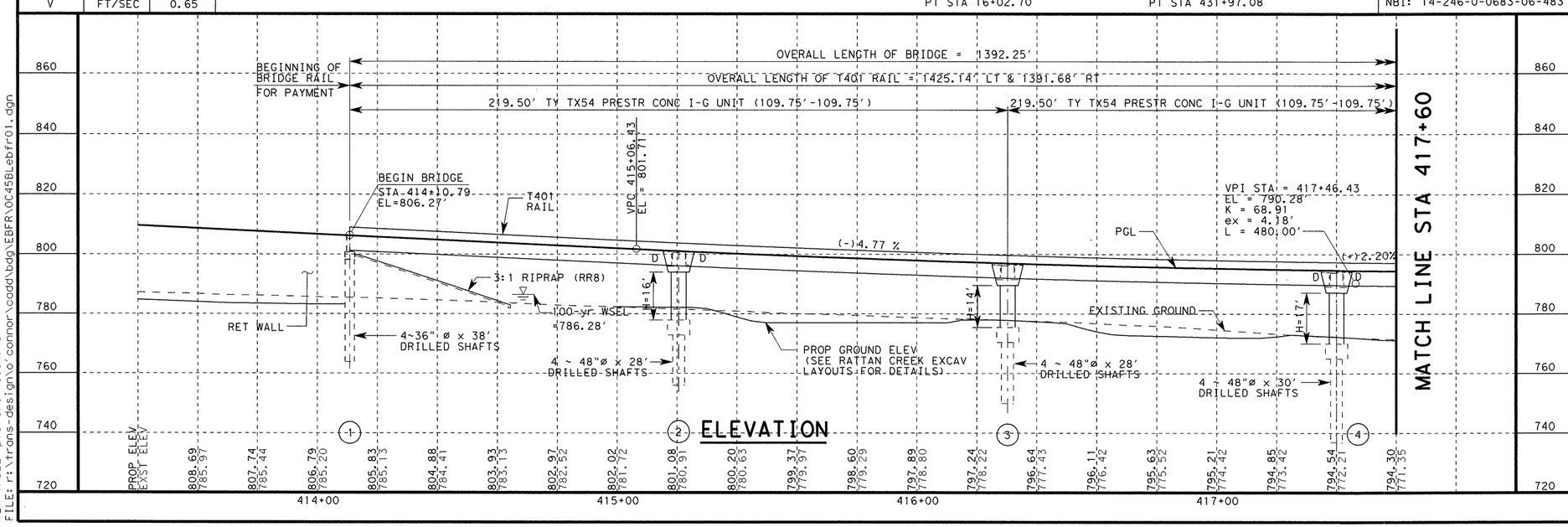

ELEVATION

HL-93
LOADING

STATE OF TEXAS
OSAMA A. SHAHAWY
88476
LICENSED PROFESSIONAL ENGINEER
4/11/11

REV. No.	DATE	REVISION	BY
△			
△			
△			

PBSJ
an Atkins company
TBPE REG. # F-474

Texas Department of Transportation
Austin District
©2011 by TxDOT

SH 45 / O'CONNOR DRIVE
EB FRONTAGE RD
BRIDGE LAYOUT

SCALE: 1"=40'H, 1"=40'V
SHEET 1 OF 4

DESIGNED: RBR	FED. RD DIV. No.	STATE	PROJECT No.		HIGHWAY No.	
CHECKED: OAS	6	TEXAS			LP 1/SH 45	
DRAWN: RBR	STATE DISTRICT	COUNTY	CONTROL No.	SECTION No.	JOB No.	SHEET No.
CHECKED: OAS	AUSTIN	WILLIAMSON	0683	06	027	335

DATE: 4/11/2011 TIME: 10:34:40 AM

PLOT DRIVER: RD*11x17*PDF.plt
PEN TABLE: plotordr*oconn.tbl
FILE: r:\trans-design\o'connor\cadd\bdg\EBFR\OC45BLebfr01.dgn

DATE: 4/11/2011 TIME: 10:34:43 AM

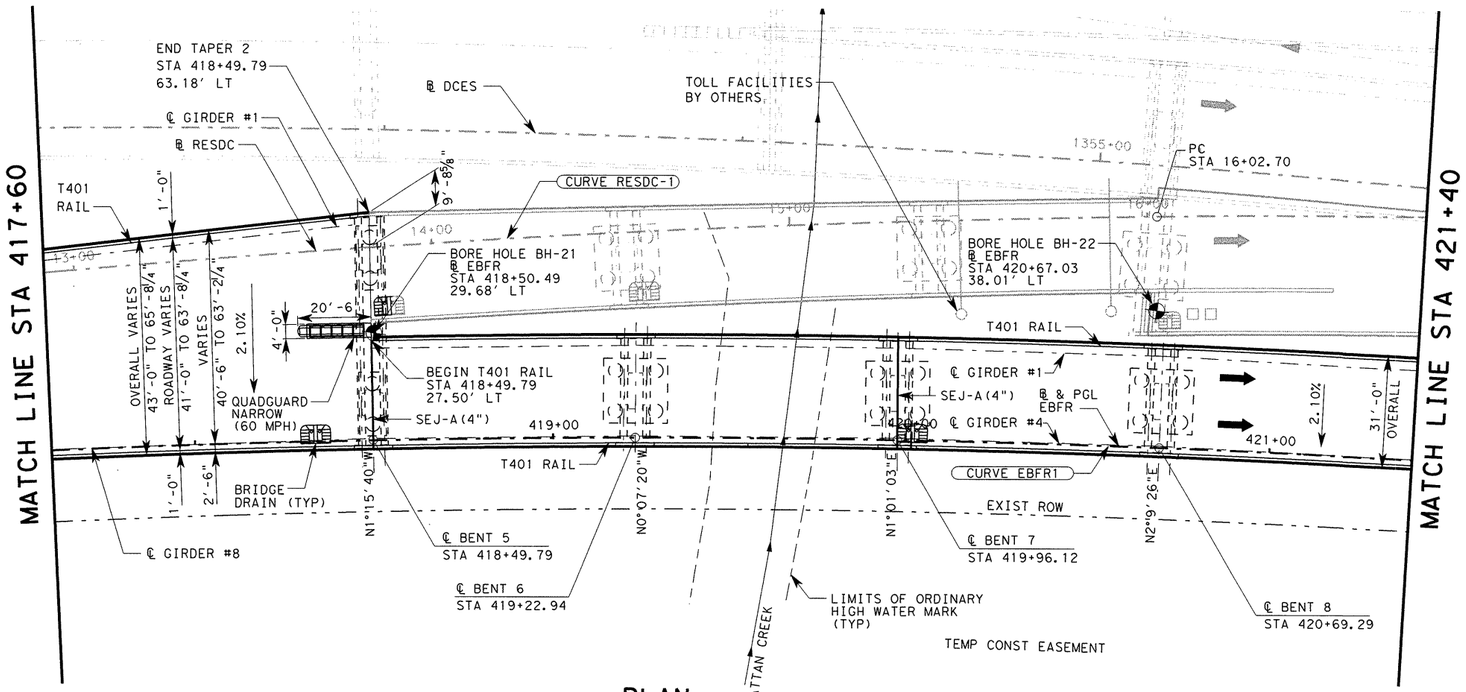

PLAN

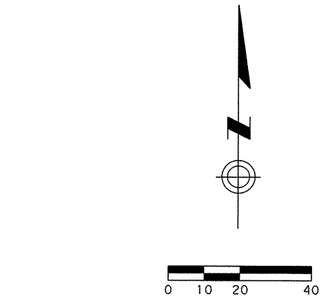

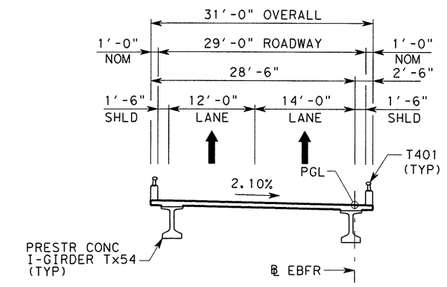

TYPICAL SECTION

(SPANS 5-12)
NTS

HYDRAULIC DATA		
		100 YR
Q	CFS	7857
V	FT/SEC	0.65

CURVE RESDC-1

PI STA 13+01.88
N 10,149,041.3499
E 3,121,177.3782
Δ = 8°20'46" (RT)
T = 301.88'
L = 602.70'
R = 4,137.55'
PC STA 10+00.00
PT STA 16+02.70

CURVE EBFR1

PI STA 420+47.70
N 10,149,185.6330
E 3,121,418.9145
Δ = 37°09'28" (RT)
T = 1,236.69'
L = 2,386.07'
R = 3,679.23'
PC STA 408+11.01
PT STA 431+97.08

DESIGN SPEED: 40 MPH
ADT: 23,100 (2040)
RFC:
URBAN - PRINCIPAL ARTERIAL
NBI: 14-246-0-0683-06-483

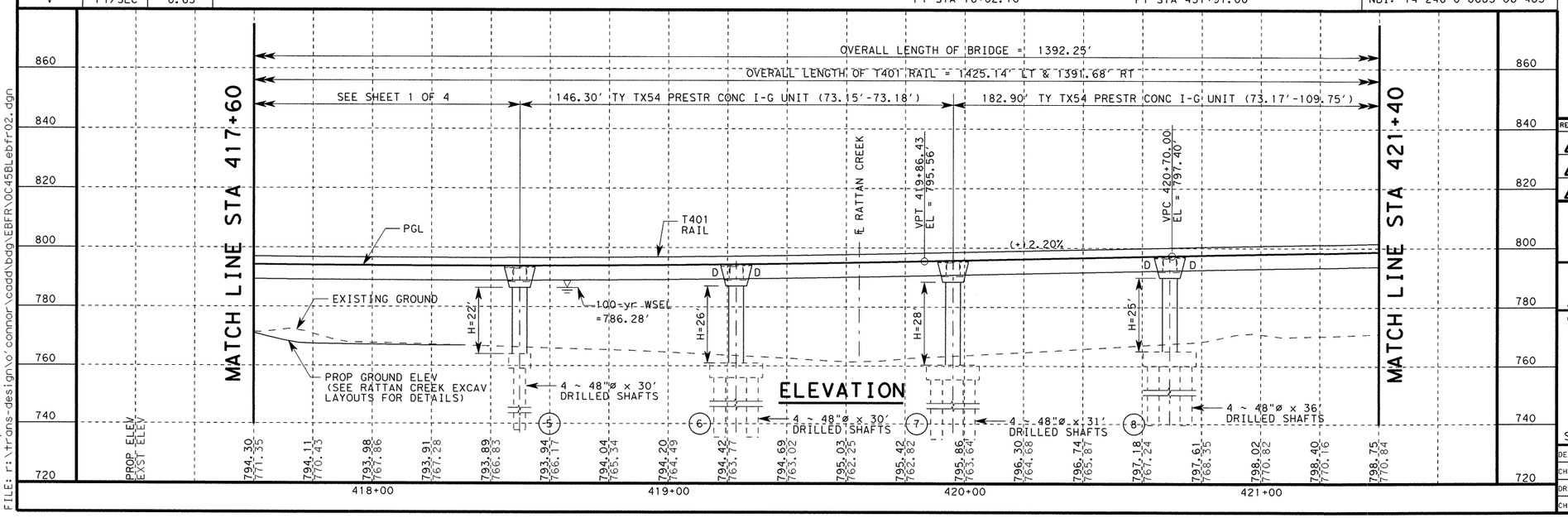

ELEVATION

HL-93
LOADING

STATE OF TEXAS
OSAMA A. SHAHAWY
88476
LICENSED
PROFESSIONAL ENGINEER
4/11/11

REV. No.	DATE	REVISION	BY
△			
△			
△			

PBSJ
an Atkins company
TBPE REG. # F-474

Texas Department of Transportation
Austin District
©2011 by TxDOT

SH 45 / O'CONNOR DRIVE
EB FRONTAGE RD
BRIDGE LAYOUT

SCALE: 1"=40'H, 1"=40'V
SHEET 2 OF 4

DESIGNED: RBR	FED. RD DIV. No.	STATE	PROJECT No.		HIGHWAY No.	
CHECKED: OAS	6	TEXAS			LP 1/SH 45	
DRAWN: RBR	STATE DISTRICT	COUNTY	CONTROL No.	SECTION No.	JOB No.	SHEET No.
CHECKED: OAS	AUSTIN	WILLIAMSON	0683	06	027	336

PLOT DRIVER: RD*11x17*PDF.plt
PEN TABLE: plotordr*ocon.tbl
FILE: r:\trans-design\o'connor\cadd\bdg\EBFR\OC45BLebfr02.dgn

DATE: 4/11/2011 TIME: 10:34:45 AM

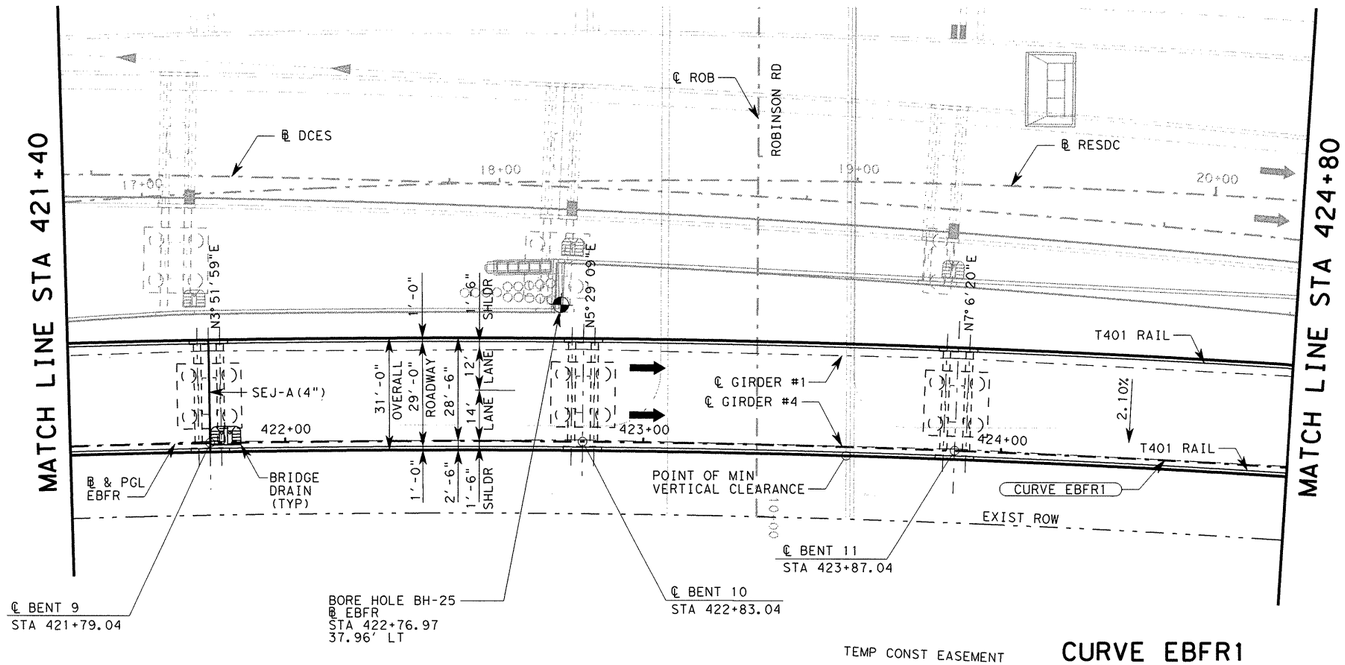

TEMP CONST EASEMENT

PLAN

CURVE EBFR1

PI STA 420+47.70
N 10,149,185.6330
E 3,121,418.9145
Δ = 37°09'28" (RT)
T = 1,236.69'
L = 2,386.07'
R = 3,679.23'
PC STA 408+11.01
PT STA 431+97.08

HYDRAULIC DATA		
		100 YR
Q	CFS	7857
V	FT/SEC	0.65

DESIGN SPEED: 40 MPH
ADT: 23,100 (2040)
RFC:
URBAN - PRINCIPAL ARTERIAL
NBI: 14-246-0-0683-06-483

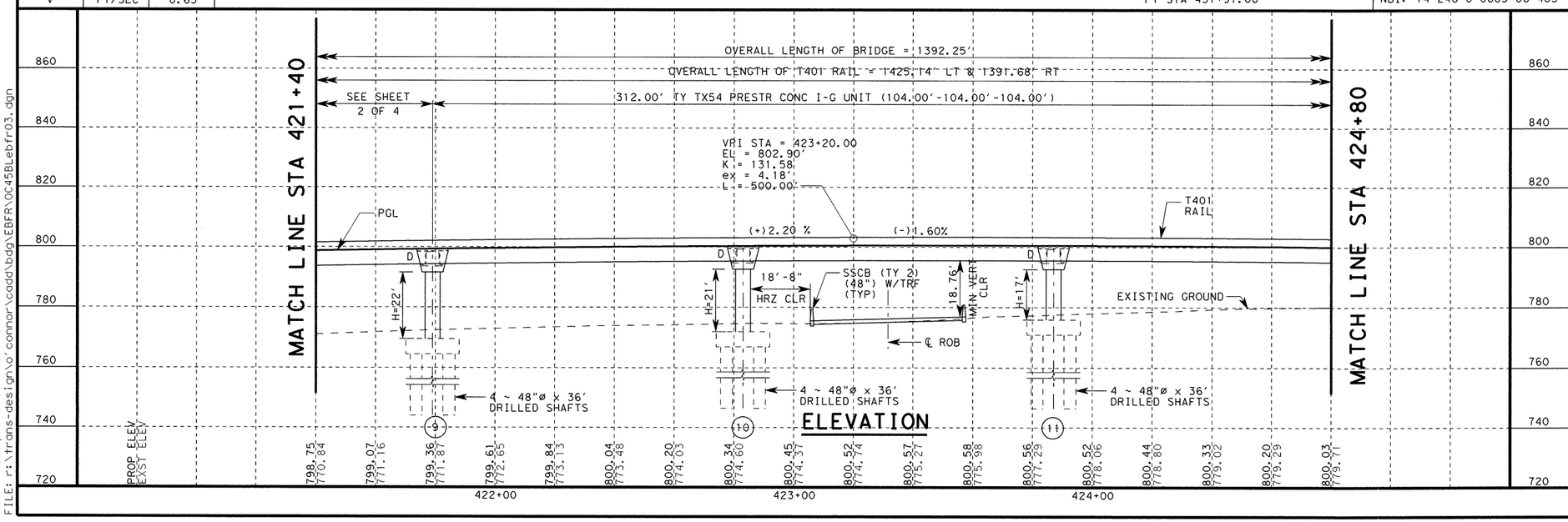

ELEVATION

HL-93 LOADING

STATE OF TEXAS
OSAMA A. SHAHAWY
88476
LICENSED PROFESSIONAL ENGINEER
4/11/11

REV. No.	DATE	REVISION	BY
△			
△			
△			

PBSJ an Atkins company TBPE REG. # F-474

Texas Department of Transportation
Austin District
©2011 by TxDOT

SH 45 / O'CONNOR DRIVE EB FRONTAGE RD BRIDGE LAYOUT

SCALE: 1"=40'H, 1"=40'V SHEET 3 OF 4

DESIGNED: RBR	FED. RD DIV. No.	STATE	PROJECT No.		HIGHWAY No.	
CHECKED: OAS	6	TEXAS			LP 1/SH 45	
DRAWN: RBR	STATE DISTRICT	COUNTY	CONTROL No.	SECTION No.	JOB No.	SHEET No.
CHECKED: OAS	AUSTIN	WILLIAMSON	0683	06	027	337

PLOT DRIVER: RD*11x17*PDF.plt
PEN TABLE: plotordr*ocon.tbl
FILE: r:\trans-design\o'connor\cadd\bdg\EBFR\OC45BLebfr03.dgn

DATE: 4/11/2011 TIME: 10:34:48 AM

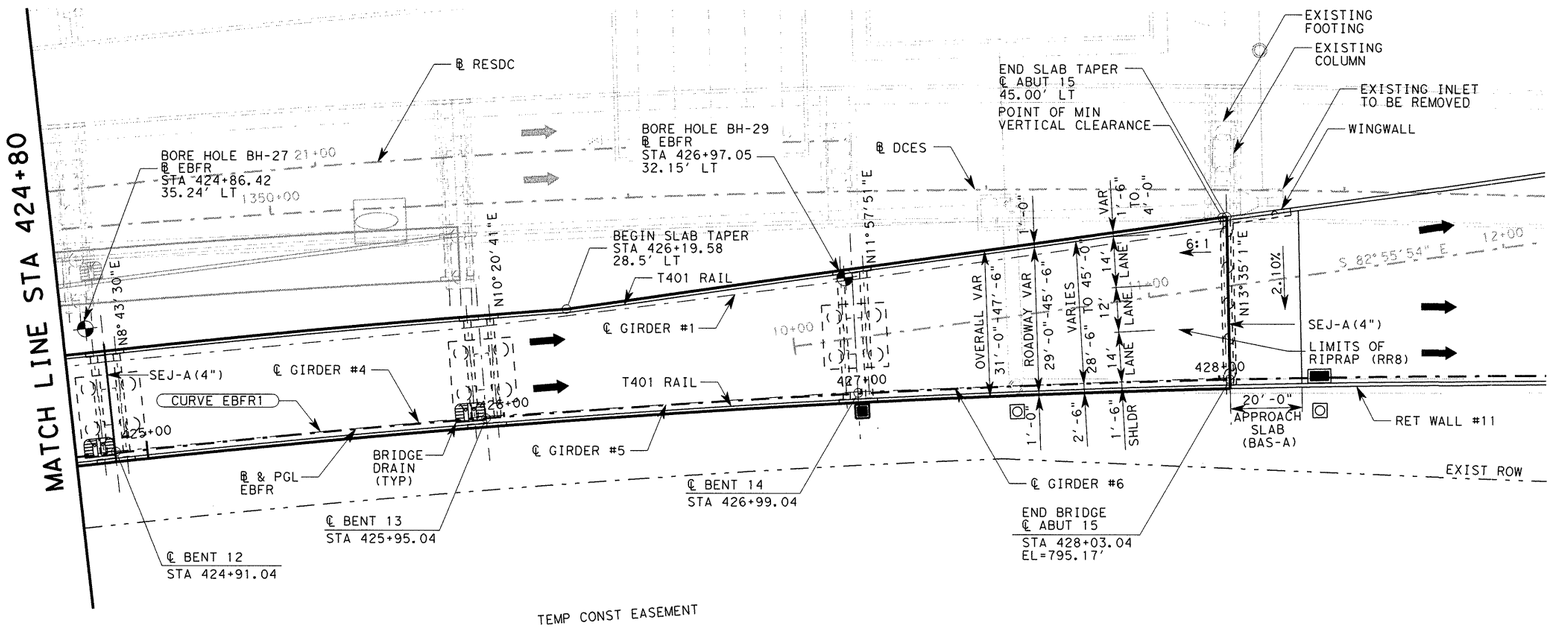

PLAN

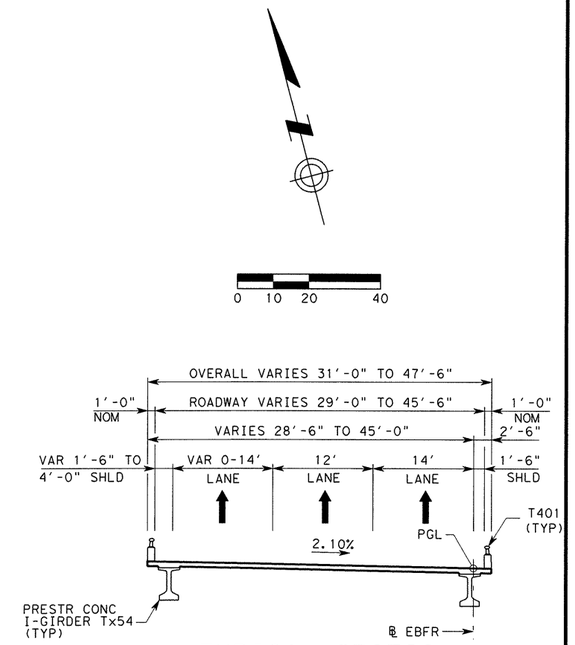

TYPICAL SECTION

(SPANS 13-14)
NTS

CURVE EBFR1

PI STA 420+47.70
N 10,149,185.6330
E 3,121,418.9145
Δ = 37°09'28" (RT)
T = 1,236.69'
L = 2,386.07'
R = 3,679.23'
PC STA 408+11.01
PT STA 431+97.08

HYDRAULIC DATA		
		100 YR
Q	CFS	7857
V	FT/SEC	0.65

DESIGN SPEED: 40 MPH
ADT: 23,100 (2040)
RFC:
URBAN - PRINCIPAL ARTERIAL
NBI: 14-246-0-0683-06-483

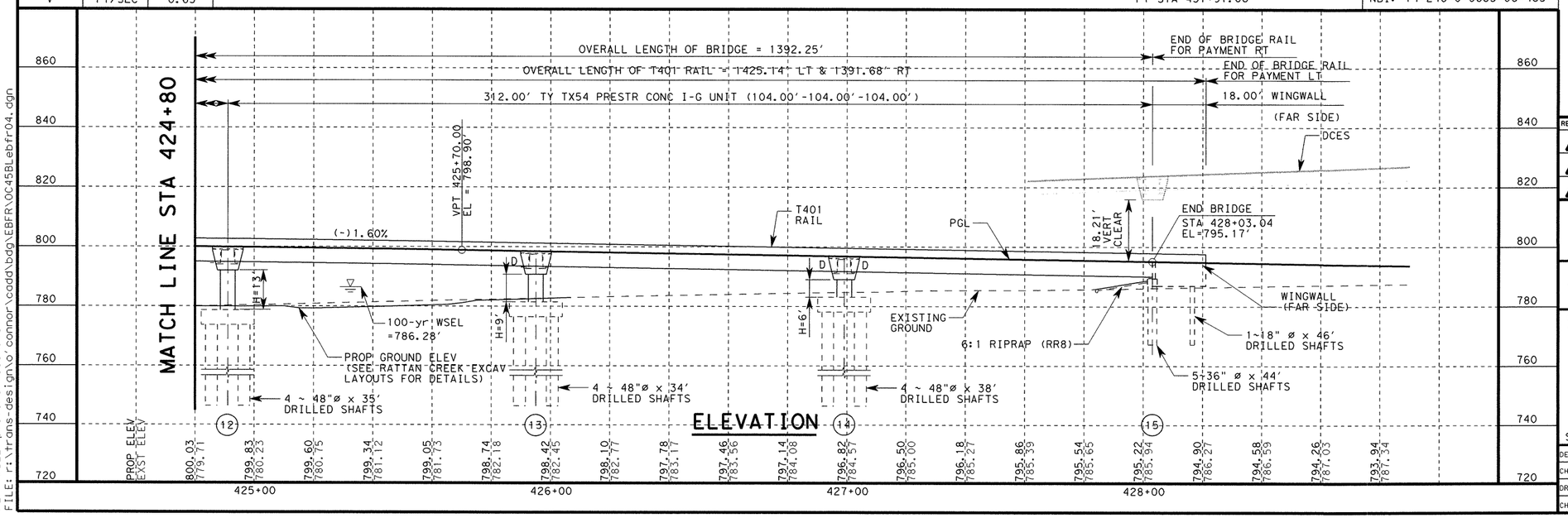

ELEVATION

HL-93 LOADING

STATE OF TEXAS
OSAMA A. SHAHAWY
88476
LICENSED PROFESSIONAL ENGINEER
4/11/11

REV. NO.	DATE	REVISION	BY
△			
△			
△			

PBSJ
an Atkins company TBPE REG. # F-474

Texas Department of Transportation
Austin District
©2011 by TxDOT

SH 45 / O'CONNOR DRIVE EB FRONTAGE RD BRIDGE LAYOUT

SCALE: 1"=40'H, 1"=40'V SHEET 4 OF 4

DESIGNED: RBR	FED. RD DIV. No.	STATE	PROJECT No.			HIGHWAY No.
CHECKED: OAS	6	TEXAS				LP 1/SH 45
DRAWN: RBR	STATE DISTRICT	COUNTY	CONTROL No.	SECTION No.	JOB No.	SHEET No.
CHECKED: OAS	AUSTIN	WILLIAMSON	0683	06	027	338

PLOT DRIVER: RD*11x17*PDF.plt
PEN TABLE: plotordr*occon.tbl
FILE: r:\trans-design\o'connor\cadd\bdg\EBFR\0C45BLebfr04.dgn

SUMMARY OF BRIDGE QUANTITIES

ITEM NO.	400	403	416	416	416	416	416	420	420	420	422	425	428	450	454	471	481	618
DESC. CODE	2001	2001	2001	2004	2078	2006	2079	2003	2017	2018	2003	2068	2001	2063	2001	2003	2012	2018
DESCRIPTION	STRUCT EXCAV	TEMP SPECIAL SHORING	DRILLED SHAFTS (18 IN)	DRILLED SHAFTS (36 IN)	DRILLED SHAFTS CASINGS (36 IN)	DRILLED SHAFTS (48 IN)	DRILLED SHAFTS CASINGS (48 IN)	CL C CONC (ABUT)	CL C CONC (BENT) (MASS)	CL C CONC (FOOTING) (MASS)	REINF CONC SLAB (CL S)	PRESTR CONC GIRDER (TX 54)	CONC SURF TREAT CLASS I	RAIL (TY T401)	SEALED EXP JOINT (4 IN)	GRATE & FRAME (BRIDGE DRAIN)	PVC PIPE (SCH 40) (6 IN)	CONDUIT (PVC) (SCH 40) (2 IN)
	CY	SF	LF	LF	LF	LF	LF	CY	CY	CY	SF	LF	SY	LF	LF	EA	LF	LF
2 - ABUTMENTS			46	372	30			51.5						18				36
13 - INTERIOR BENTS	1119	7074				1712	70		1276	722.3								
2 - 219.50' PRESTR. CONC. I-G UNIT											23441	2974.0	2627	884	158	4	129	1769
1 - 146.30' PRESTR. CONC. I-G UNIT											4548	548.7	517	293	30			587
1 - 182.90' PRESTR. CONC. I-G UNIT											5697	695.7	647	367	30	1	43	735
2 - 312.00' PRESTR. CONC. I-G UNIT											20903	3499.4	2369	1252	77	3	89	2505
TOTALS	1119	7074	46	372	30	1712	70	51.5	1276	722.3	54589	7717.8	6160	2796	294	8	261	5632

BEARING SEAT ELEVATIONS

		Beam 1	Beam 2	Beam 3	Beam 4	Beam 5	Beam 6	Beam 7	Beam 8
ABUT 1	FWD	801.331	801.175	801.019	800.864	800.708	800.552		
BENT 2	BK	796.443	796.261	796.079	795.898	795.716	795.534		
	FWD	795.976	795.823	795.670	795.517	795.364	795.212	795.059	
BENT 3	BK	792.125	791.966	791.807	791.648	791.489	791.330	791.171	
	FWD	791.944	791.784	791.624	791.464	791.303	791.143	791.004	
BENT 4	BK	789.806	789.629	789.451	789.273	789.096	788.918	788.762	
	FWD	789.729	789.575	789.422	789.268	789.115	788.961	788.807	788.654
BENT 5	BK	789.305	789.127	788.948	788.770	788.592	788.413	788.235	788.057
	FWD	788.788	788.613	788.438	788.263				
BENT 6	BK	789.287	789.112	788.937	788.762				
	FWD	789.374	789.199	789.022	788.849				
BENT 7	BK	790.575	790.400	790.225	790.049				
	FWD	790.797	790.622	790.448	790.273				
BENT 8	BK	792.269	792.093	791.918	791.743				
	FWD	792.385	792.211	792.036	791.861				
BENT 9	BK	794.236	794.061	793.885	793.710				
	FWD	794.426	794.251	794.076	793.901				
BENT 10	BK	795.407	795.232	795.057	794.882				
	FWD	795.444	795.269	795.095	794.920				
BENT 11	BK	795.621	795.446	795.271	795.096				
	FWD	795.607	795.432	795.257	795.082				
BENT 12	BK	794.979	794.804	794.629	794.454				
	FWD	794.892	794.717	794.542	794.367				
BENT 13	BK	793.500	793.325	793.150	792.975				
	FWD	793.340	793.205	793.069	792.934	792.798			
BENT 14	BK	791.895	791.733	791.571	791.409	791.248			
	FWD	791.784	791.652	791.520	791.389	791.257	791.126		
ABUT 15	BK	790.398	790.224	790.051	789.877	789.703	789.529		

Rev. 6/29/11

STATE OF TEXAS
OSAMA A. SHAHAWY
88476
LICENSED PROFESSIONAL ENGINEER
6/21/11

HL-93 LOADING

REV. No.	DATE	REVISION	BY
△			
△			
△			

PBSJ an Atkins company TBPE REG. # F-474

Texas Department of Transportation
Austin District
©2011 by TxDOT

SH 45 / O'CONNOR DRIVE
EB FRONTAGE RD
ESTIMATED QUANTITIES
AND
BEARING SEAT ELEVATIONS

SHEET 1 OF 1

DESIGNED: RBR	FED. RD DIV. No.	STATE	PROJECT No.			HIGHWAY No.
CHECKED: OAS	6	TEXAS				LP 1/SH 45
DRAWN: RBR	STATE DISTRICT	COUNTY	CONTROL No.	SECTION No.	JOB No.	SHEET No.
CHECKED: OAS	AUSTIN	WILLIAMSON	0683	06	027	339

DATE: 6/21/2011 TIME: 10:24:45 AM
PLOT DRIVER: RD*11x17*PDF.plt
PEN TABLE: plotordr.tbl
FILE: R:\Trans-Design\O'Connor\CADD\BDG\EBFR\OC45BQebfr.dgn

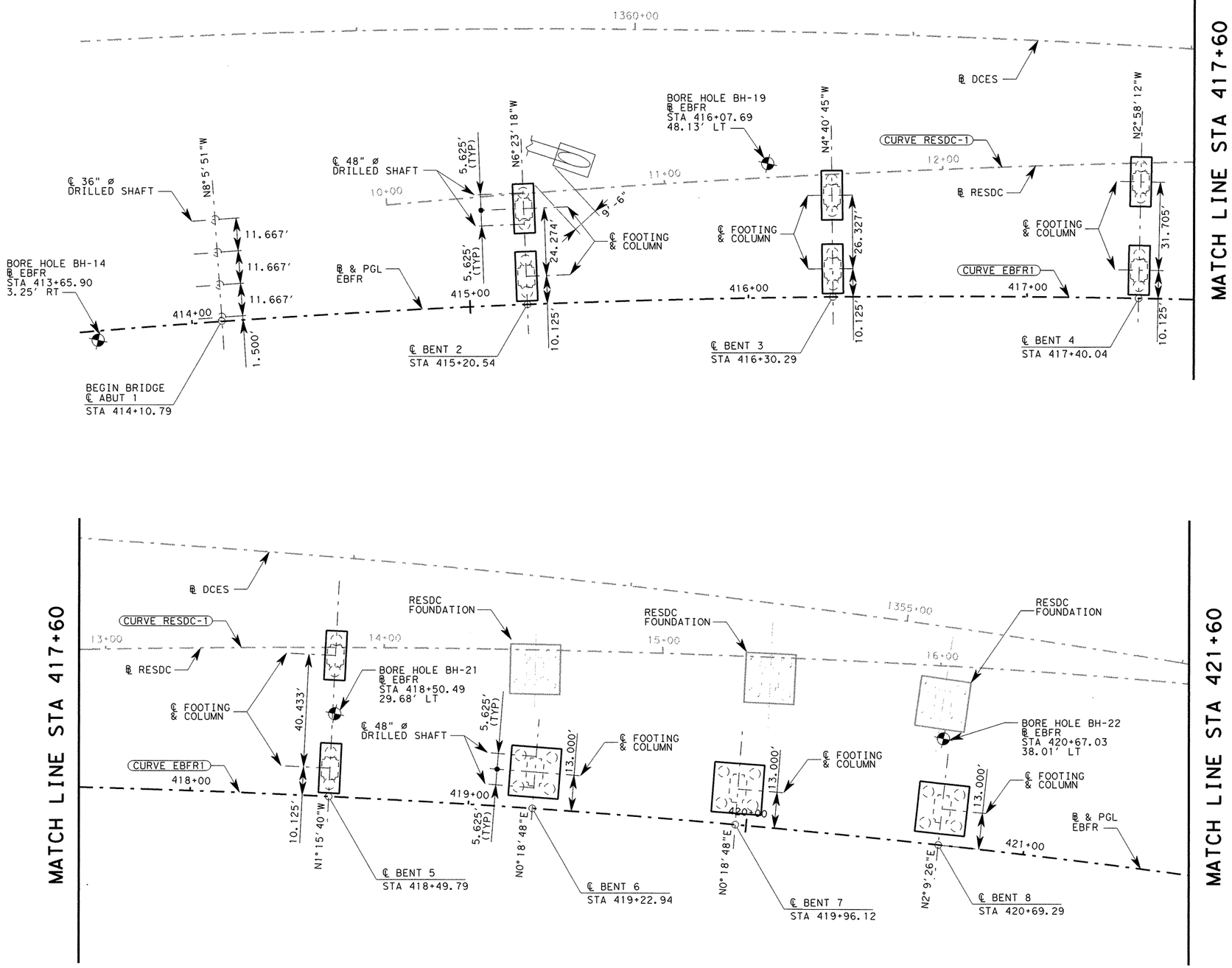

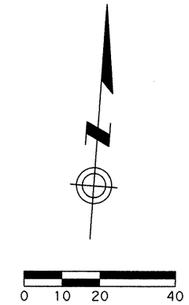

GENERAL NOTES:

1. FOR LENGTH OF DRILLED SHAFTS, SEE BRIDGE LAYOUTS.
2. FOR DRILL SHAFT LOADS AND DETAILS, SEE FOUNDATION DETAILS, EXCEPT FOR ABUTMENTS.
3. ALL BENTS ARE RADIAL TO CONTROL UNLESS OTHERWISE NOTED.
4. ALL DRILLED SHAFTS ARE 48" DIAMETER UNLESS OTHERWISE NOTED.
5. THE DRILLED SHAFT 28 DAY CONCRETE STRENGTH SHALL BE 3600 PSI
6. AFTER SHAFTS ARE DRILLED TO THE PLAN DEPTH, THE SHAFTS SHOULD BE PROBED TO A DEPTH OF 1.5 TIMES THE SHAFT DIAMETER OR TO A DEPTH OF 5 FT, WHICHEVER IS GREATER. IF VOIDS, EITHER OPEN OR CLAY-FILLED, ARE ENCOUNTERED, THE SHAFTS SHOULD BE ADVANCED BELOW THE VOID(S) AND RE-PROBED. CONTINUE PROBING AND ADVANCING UNTIL NO VOIDS ARE ENCOUNTERED WITHIN A DEPTH OF 1.5 DIAMETERS BELOW THE SHAFT BOTTOM.
7. WHEN SLOUGHING AND/OR GROUNDWATER SEEPAGE ARE ENCOUNTERED DURING DRILLED SHAFT INSTALLATION (I.E. SPOILS ARE RECORDED FROM THE DRILLING OPERATIONS) THE CONTRACTOR SHALL INSTALL PERMANENT CASING AS DIRECTED BY THE ENGINEER TO EXCLUDE THE GROUND WATER.

STATE OF TEXAS
OSAMA A. SHAHAWY
88476
LICENSED
PROFESSIONAL ENGINEER
6/7/11

HL-93
LOADING

REV. No.	DATE	REVISION	BY
△			
△			
△			

PBSJ
an Atkins company
TBPE REG. # F-474

Texas Department of Transportation
Austin District
©2011 by TxDOT

SH 45 / O'CONNOR DRIVE EB FRONTAGE RD FOUNDATION LAYOUT

SCALE: 1"=40'
SHEET 1 OF 2

DESIGNED: RBR	FED. RD DIV. No.	STATE	PROJECT No.			HIGHWAY No.	
CHECKED: OAS	6	TEXAS				LP 1/SH 45	
DRAWN: RBR	STATE DISTRICT	COUNTY	CONTROL No.	SECTION No.	JOB No.	SHEET No.	
CHECKED: OAS	AUSTIN	WILLIAMSON	0683	06	027	340	

Rev. 6/29/11

DATE: 6/2/2011 TIME: 1:40:00 PM

PLOT DRIVER: RD*11x17*PDF.pltr
PEN TABLE: plotordr*ocon.tbl
FILE: r:\trans-design\o'connor\cadd\bdg\EBFR\OC45FLebfr01.dgn

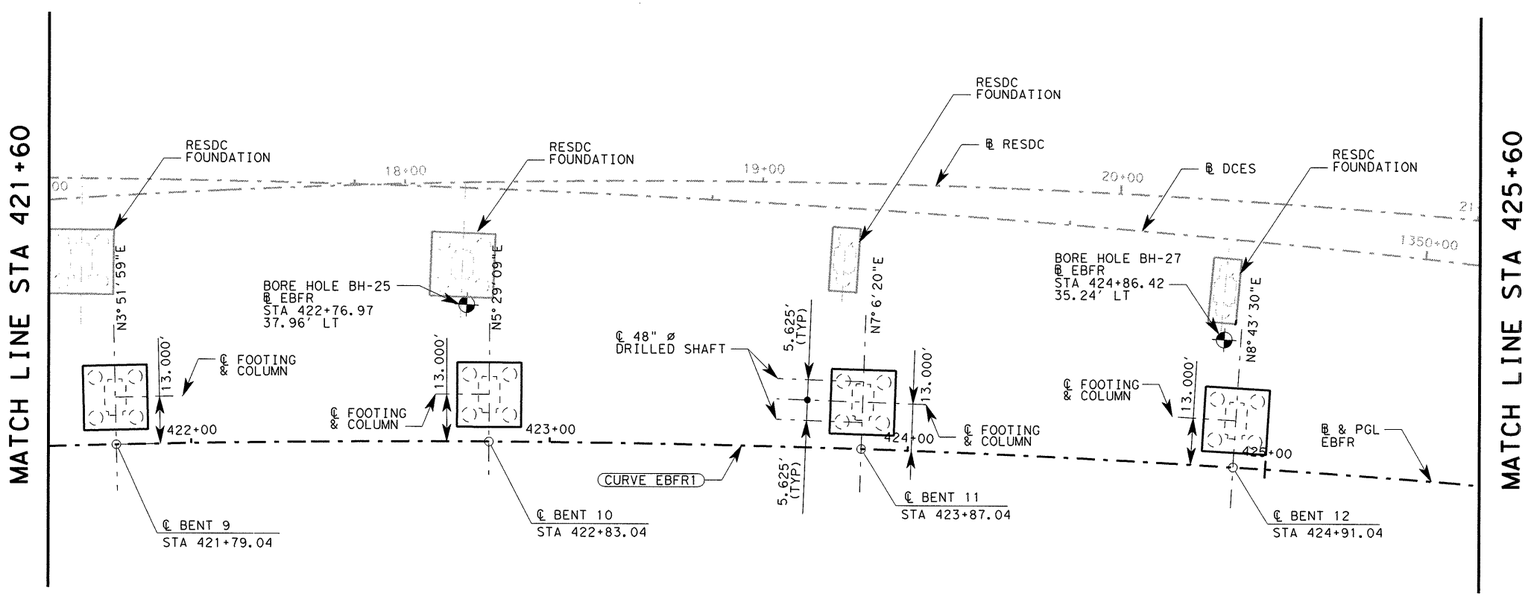

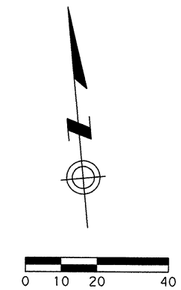

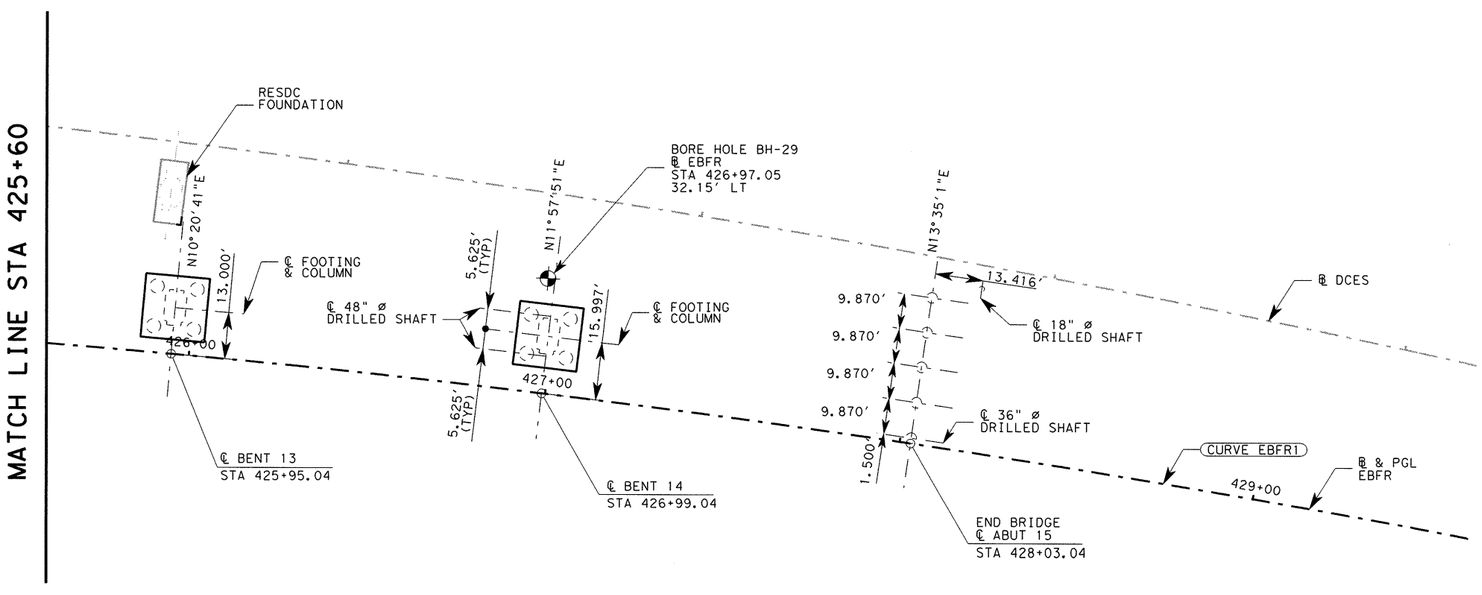

STATE OF TEXAS
OSAMA A. SHAHAWY
88476
LICENSED
PROFESSIONAL ENGINEER
4/11/11

HL-93
LOADING

REV. No.	DATE	REVISION	BY
△			
△			
△			

PBSJ
an Atkins company
TBPE REG. # F-474

Texas Department of Transportation
Austin District
©2011 by TxDOT

SH 45 / O'CONNOR DRIVE EB FRONTAGE RD FOUNDATION LAYOUT

SCALE: 1"=40'
SHEET 2 OF 2

DESIGNED: RBR	FED. RD DIV. No.	STATE	PROJECT No.			HIGHWAY No.	
CHECKED: OAS	6	TEXAS				LP 1/SH 45	
DRAWN: RBR	STATE DISTRICT	COUNTY		CONTROL No.	SECTION No.	JOB No.	SHEET No.
CHECKED: OAS	AUSTIN	WILLIAMSON		0683	06	027	341

DATE: 4/11/2011 TIME: 10:34:55 AM
PLOT DRIVER: RD*11x17*PDF.plt
PEN TABLE: plotordr*ocon.tbl
FILE: r:\trans-design\o'connor\cadd\bdg\EBFR\OC45FLebfr02.dgn

ESTIMATED QUANTITES					
BENT/COL NO	CLASS "C" (MASS) CONC (FOOTING) (CY)	STRUCT EXCAV (CY)	TEMP SPCL SHORING (SF)	DRILL SHAFT (48" DIA) (LF)	CALCULATED DRILL SHAFT LOAD (EACH) (TONS)
2/1	24.7	42	351	56	405
2/2	24.7	42	351	56	405
3/1	24.7	42	351	56	429
3/2	24.7	42	351	56	429
4/1	24.7	42	351	60	457
4/2	24.7	42	351	60	457

BILL OF REINFORCING STEEL (TYP EACH FOOTING)				
BAR	NO.	SIZE	LENGTH	WEIGHT
F1	9	#8	17'-3"	415
F2	13	#11	17'-3"	1,191
FD	40	#11	15'-5"	3,276
S	35	#6	23'-8"	1,244
T	10	#8	17'-3"	461
U1	10	#6	9'-10"	147
U2	18	#6	6'-4"	170
REINFORCING STEEL			LB	6,904

* FOR CONTRACTOR'S INFORMATION ONLY

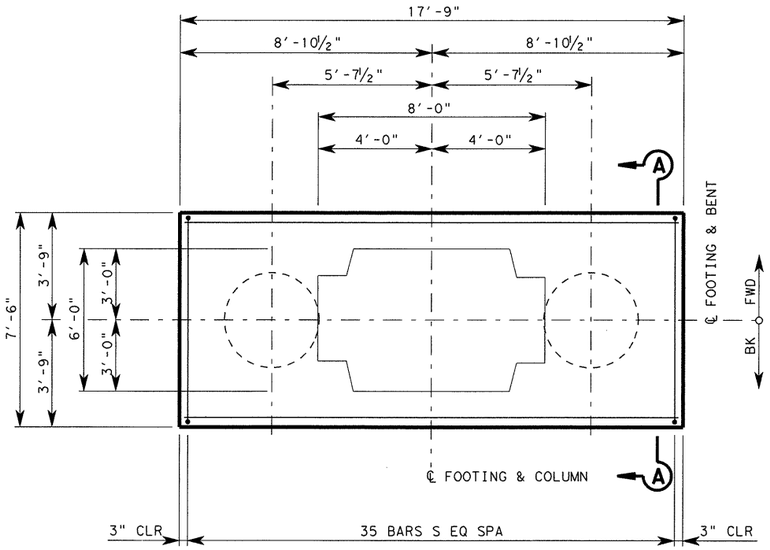

PLAN

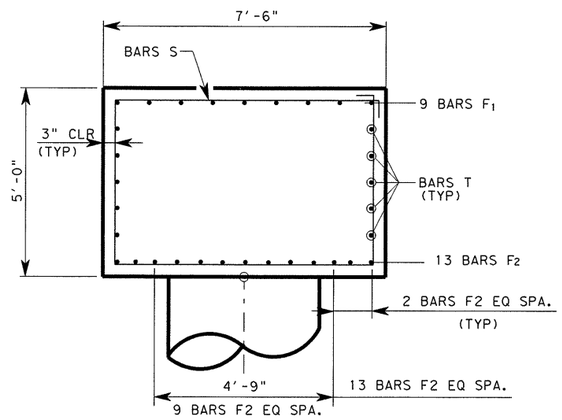

SECTION A-A

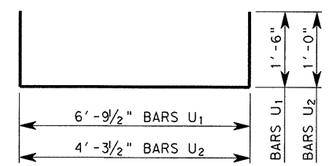

BARS U

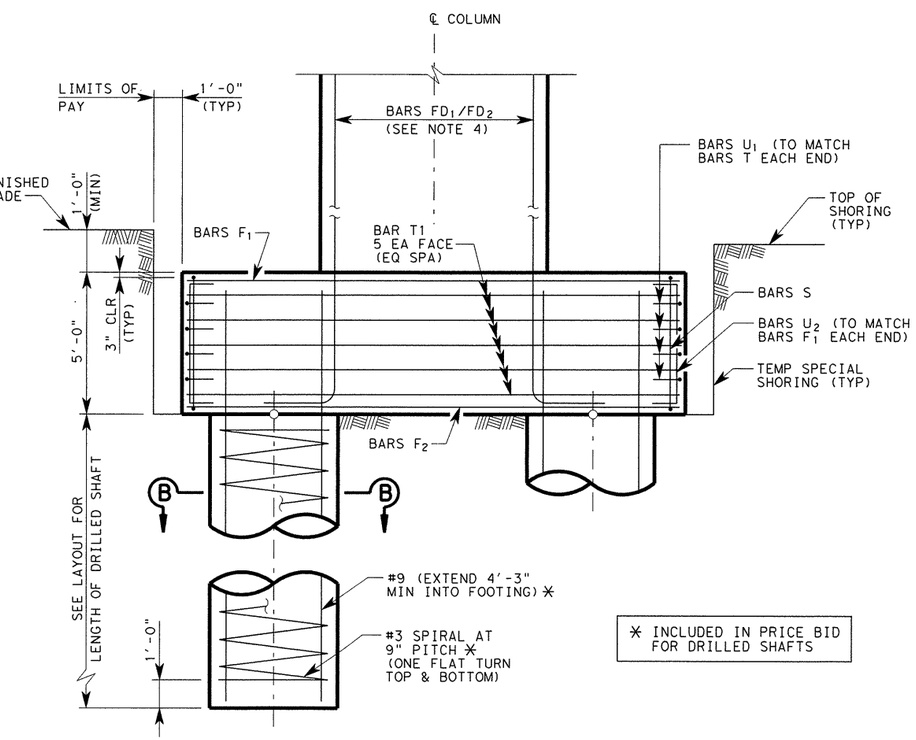

✳ INCLUDED IN PRICE BID FOR DRILLED SHAFTS

ELEVATION

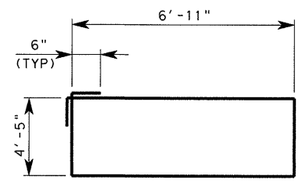

BARS S

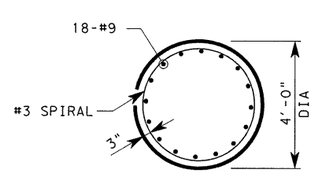

SECTION B-B

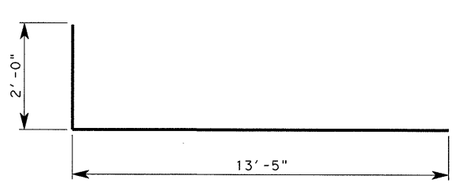

BARS FD

NOTES:

1. DESIGNED ACCORDING TO AASHTO LRFD BRIDGE SPECIFICATIONS, 4TH EDITION 2007 AND 2009 CURRENT INTERIMS FOR HL-93 LOADING.
2. ALL DIMENSIONS TO THE REINFORCING STEEL ARE TO THE ℄ OF THE BAR UNLESS OTHERWISE NOTED.
3. SEE "FOUNDATION LAYOUT" FOR FOUNDATION LOCATION AND ORIENTATION.
4. SEE CORRESPONDING BENT SHEET FOR PLACEMENT OF BARS FD TO MATCH COLUMN REINFORCING.
5. SPECIAL SHORING SHALL BE USED AS NOTED WITH THE ABILITY TO POUR AGAINST EARTH. CONTRACTOR SHALL MAINTAIN 3" MINIMUM CLEAR COVER.

STATE OF TEXAS
OSAMA A. SHAHAWY
88476
LICENSED
PROFESSIONAL ENGINEER
6/7/11

HL-93 LOADING

REV. No.	DATE	REVISION	BY
△			
△			
△			

PBSJ an Atkins company TBPE REG. # F-474

Texas Department of Transportation Austin District

©2011 by TxDOT

SH 45 / O'CONNOR DRIVE EB FRONTAGE RD FOUNDATION DETAILS BENTS 2-4

SCALE: NTS

SHEET 1 OF 5

DESIGNED: RBR	FED. RD DIV. No.	STATE	PROJECT No.			HIGHWAY No.
CHECKED: OAS	6	TEXAS				LP 1/SH 45
DRAWN: RBR	STATE DISTRICT	COUNTY	CONTROL No.	SECTION No.	JOB No.	SHEET No.
CHECKED: OAS	AUSTIN	WILLIAMSON	0683	06	027	342

Rev. 6/29/11

PLOT DRIVER: RD*11x17*PDF.plt
PEN TABLE: plotordr*ocon.tbl
FILE: r:\trans-design\o'connor\cadd\bdg\EBFR\0C45FDebfr01.dgn
DATE: 6/2/2011 TIME: 1:40:02 PM

ESTIMATED QUANTITES					
BENT/COL NO	CLASS "C" (MASS) CONC (FOOTING) (CY)	STRUCT EXCAV (CY)	TEMP SPCL SHORING (SF)	DRILL SHAFT (48" DIA) (LF)	CALCULATED DRILL SHAFT LOAD (EACH) (TONS)
5/1	24.7	42	351	60	694
5/2	24.7	42	351	60	694

BILL OF REINFORCING STEEL (TYP EACH FOOTING)				
BAR	NO.	SIZE	LENGTH	WEIGHT
F1	9	#8	17.2500	415
F2	15	#11	17.2500	1,375
FD	48	#11	15.4167	3,932
S	35	#6	23.6667	1,244
T	10	#8	17.2500	461
U1	10	#6	9.7917	147
U2	18	#6	6.2917	170
REINFORCING STEEL			LB	7,743

* FOR CONTRACTOR'S INFORMATION ONLY

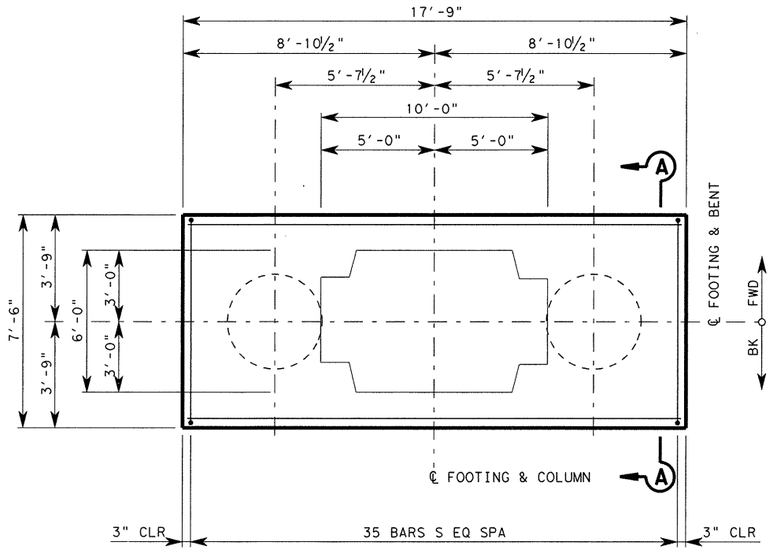

PLAN

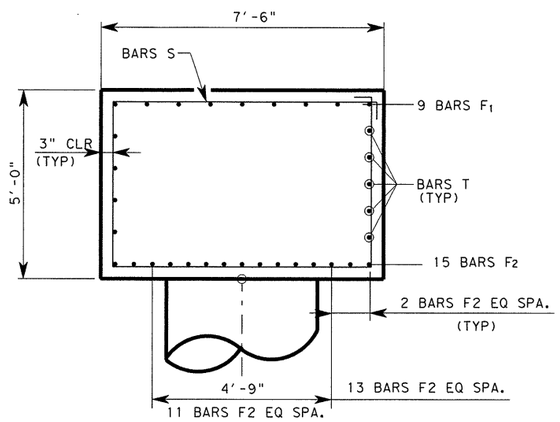

SECTION A-A

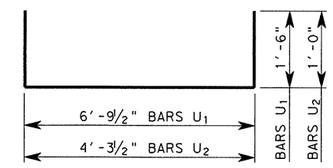

BARS U

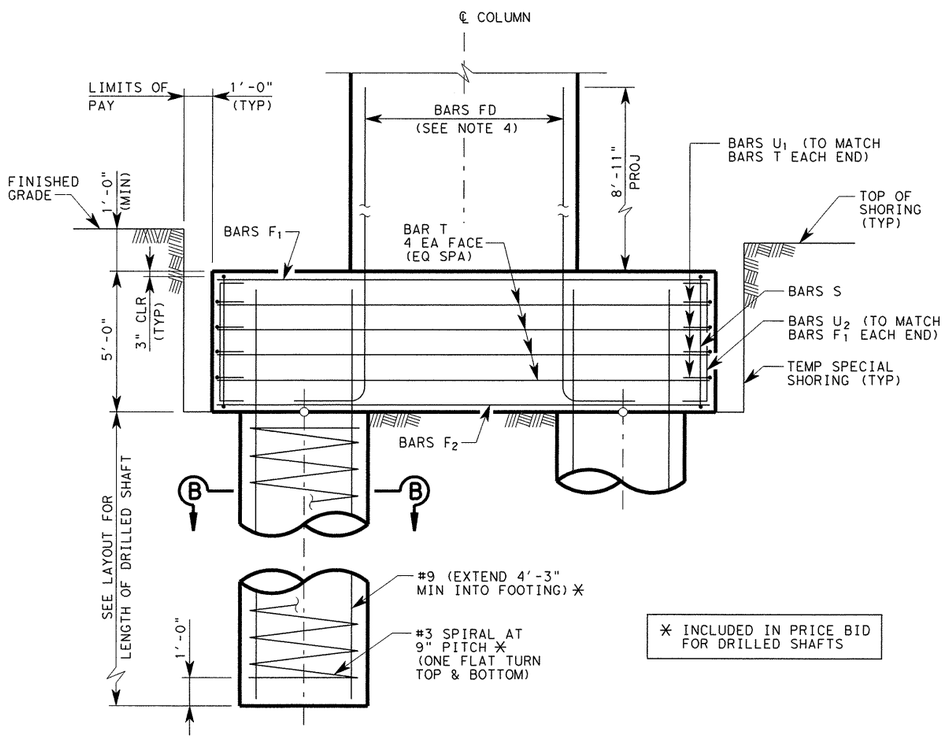

✳ INCLUDED IN PRICE BID FOR DRILLED SHAFTS

ELEVATION

NOTES:

1. DESIGNED ACCORDING TO AASHTO LRFD BRIDGE SPECIFICATIONS, 4TH EDITION 2007 AND 2009 CURRENT INTERIMS FOR HL-93 LOADING.
2. ALL DIMENSIONS TO THE REINFORCING STEEL ARE TO THE ℄ OF THE BAR UNLESS OTHERWISE NOTED.
3. SEE "FOUNDATION LAYOUT" FOR FOUNDATION LOCATION AND ORIENTATION.
4. SEE CORRESPONDING BENT SHEET FOR PLACEMENT OF BARS FD TO MATCH COLUMN REINFORCING.
5. SPECIAL SHORING SHALL BE USED AS NOTED WITH THE ABILITY TO POUR AGAINST EARTH. CONTRACTOR SHALL MAINTAIN 3" MINIMUM CLEAR COVER.

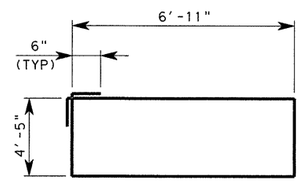

BARS S

HL-93 LOADING

STATE OF TEXAS
OSAMA A. SHAHAWY
88476
LICENSED PROFESSIONAL ENGINEER
6/7/11

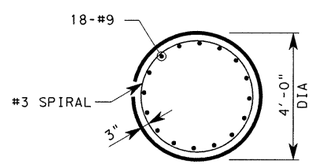

SECTION B-B

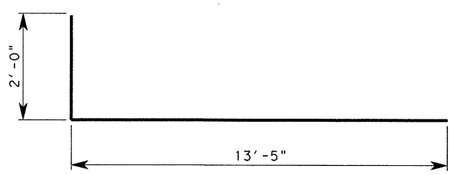

BARS FD

Rev. 6/29/11

REV. No.	DATE	REVISION	BY
△			
△			
△			

PBSJ an Atkins company TBPE REG. # F-474

Texas Department of Transportation Austin District
©2011 by TxDOT

SH 45 / O'CONNOR DRIVE EB FRONTAGE RD FOUNDATION DETAILS BENT 5

SCALE: NTS SHEET 2 OF 5

DESIGNED: RBR	FED. RD DIV. No.	STATE	PROJECT No.		HIGHWAY No.		
CHECKED: OAS	6	TEXAS			LP 1/SH 45		
DRAWN: RBR	STATE DISTRICT	COUNTY	CONTROL No.	SECTION No.	JOB No.	SHEET No.	
CHECKED: OAS	AUSTIN	WILLIAMSON	0683	06	027	343	

PLOT DRIVER: RD*11x17*PDF.plt
PEN TABLE: plotord*ocon.tbl
FILE: r:\trans-design\o'connor\cadd\bdg\EBFR\OC45FDebfr02.dgn
DATE: 6/2/2011 TIME: 1:40:04 PM

DATE: 6/2/2011 TIME: 1:40:06 PM

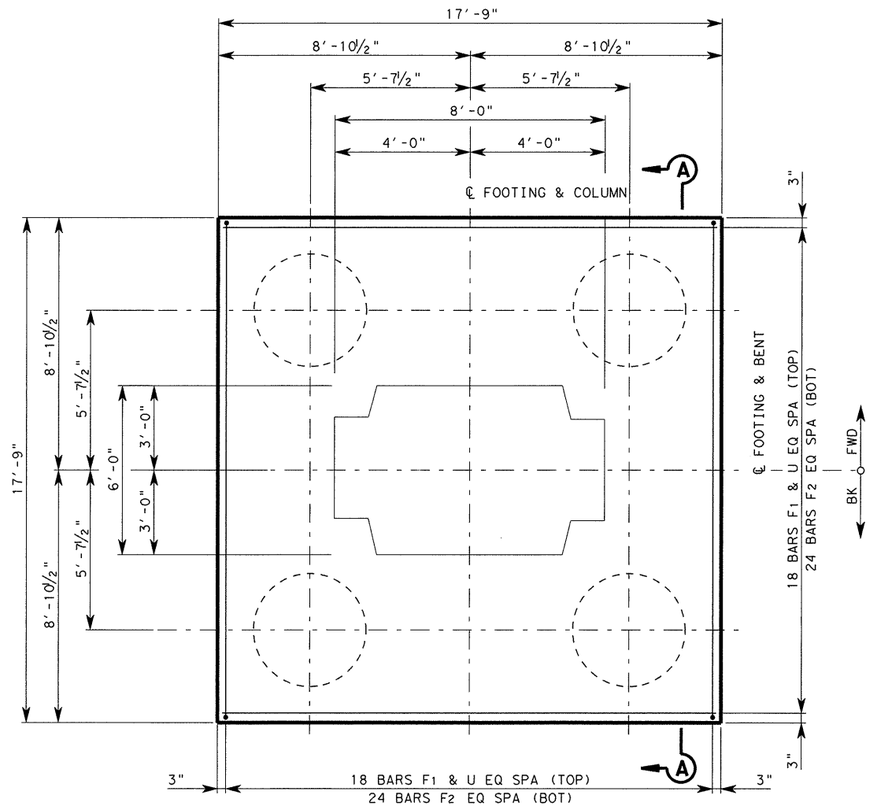

PLAN

ESTIMATED QUANTITES					
COL NO	CLASS "C" (MASS) CONC (FOOTING) (CY)	STRUCT EXCAV (CY)	TEMP SPCL SHORING (SF)	DRILL SHAFT (48" DIA) (LF)	CALCULATED DRILL SHAFT LOAD (EACH) (TONS)
6	58.3	87	474	120	402
7	58.3	87	474	124	402
8	58.3	87	474	144	407

BILL OF REINFORCING STEEL (TYP EACH FOOTING)				
BAR	NO.	SIZE	LENGTH	WEIGHT
F1	36	#8	17.2500	1,658
F2	48	#9	17.2500	2,815
FD	44	#11	15.4167	3,604
T	16	#8	17.2500	737
U	72	#6	7.0833	766
REINFORCING STEEL			LB	9,580

* FOR CONTRACTOR'S INFORMATION ONLY

NOTES:

1. DESIGNED ACCORDING TO AASHTO LRFD BRIDGE SPECIFICATIONS, 4TH EDITION 2007 AND 2009 CURRENT INTERIMS FOR HL-93 LOADING.
2. ALL DIMENSIONS TO THE REINFORCING STEEL ARE TO THE ℄ OF THE BAR UNLESS OTHERWISE NOTED.
3. SEE "FOUNDATION LAYOUT" FOR FOUNDATION LOCATION AND ORIENTATION.
4. SEE CORRESPONDING BENT SHEET FOR PLACEMENT OF BARS FD TO MATCH COLUMN REINFORCING.
5. SPECIAL SHORING SHALL BE USED AS NOTED WITH THE ABILITY TO POUR AGAINST EARTH. CONTRACTOR SHALL MAINTAIN 3" MINIMUM CLEAR COVER.

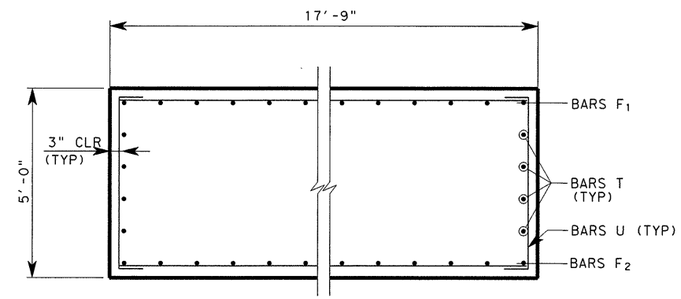

SECTION A-A

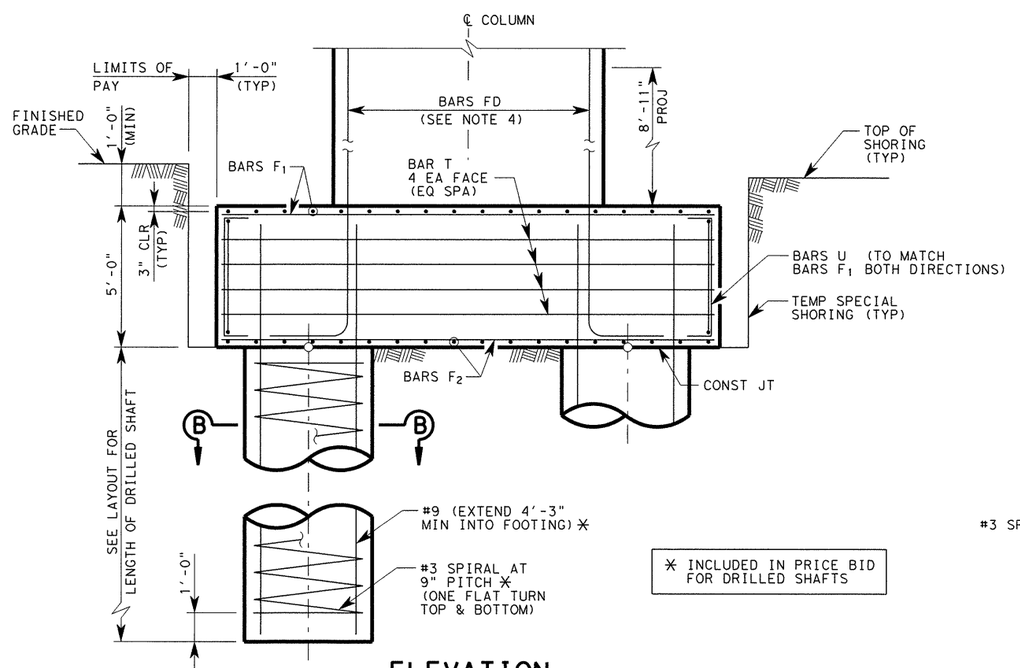

✳ INCLUDED IN PRICE BID FOR DRILLED SHAFTS

ELEVATION

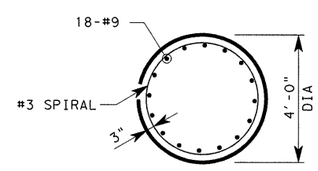

SECTION B-B

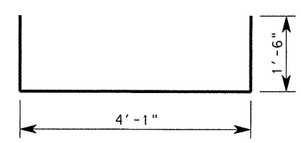

BARS U

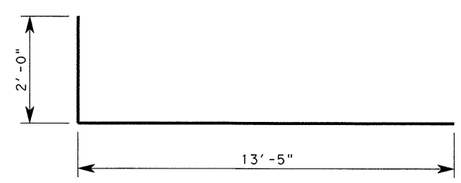

BARS FD

HL-93 LOADING

STATE OF TEXAS
OSAMA A. SHAHAWY
88476
LICENSED PROFESSIONAL ENGINEER
6/7/11

REV. NO.	DATE	REVISION	BY
△			
△			
△			

PBSJ an Atkins company TBPE REG. # F-474

Texas Department of Transportation Austin District
©2011 by TxDOT

SH 45 / O'CONNOR DRIVE EB FRONTAGE RD FOUNDATION DETAILS BENTS 6-8

SCALE: NTS SHEET 3 OF 5

DESIGNED: RBR	FED. RD DIV. No.	STATE	PROJECT No.		HIGHWAY No.
CHECKED: OAS	6	TEXAS			LP 1/SH 45

DRAWN: RBR	STATE DISTRICT	COUNTY	CONTROL No.	SECTION No.	JOB No.	SHEET No.
CHECKED: OAS	AUSTIN	WILLIAMSON	0683	06	027	344

Rev. 6/29/11

PLOT DRIVER: RD*11x17*PDF.plt
PEN TABLE: plotord*ocon.tbl
FILE: r:\trans-design\o'connor\cadd\bdg\EBFR\OC45FDebfr03.dgn

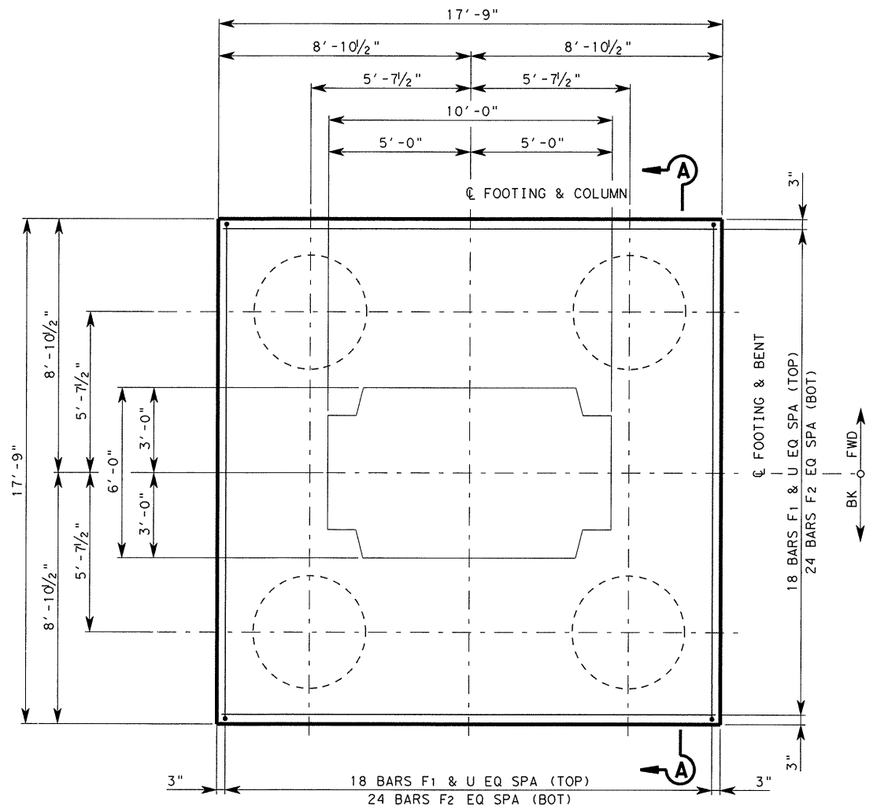

PLAN

ESTIMATED QUANTITES					
COL NO	CLASS "C" (MASS) CONC (FOOTING) (CY)	STRUCT EXCAV (CY)	TEMP SPCL SHORING (SF)	DRILL SHAFT (48" DIA) (LF)	CALCULATED DRILL SHAFT LOAD (EACH) (TONS)
9	58.3	87	474	144	407
10	58.3	87	474	144	409
11	58.3	87	474	144	407
12	58.3	87	474	140	406
13	58.3	87	474	136	362

BILL OF REINFORCING STEEL (TYP EACH FOOTING)				
BAR	NO.	SIZE	LENGTH	WEIGHT
F1	36	#8	17.2500	1,658
F2	48	#9	17.2500	2,815
FD	48	#11	15.4167	3,932
T	16	#8	17.2500	737
U	72	#6	7.0833	766
REINFORCING STEEL			LB	9,908

* FOR CONTRACTOR'S INFORMATION ONLY

NOTES:

1. DESIGNED ACCORDING TO AASHTO LRFD BRIDGE SPECIFICATIONS, 4TH EDITION 2007 AND 2009 CURRENT INTERIMS FOR HL-93 LOADING.
2. ALL DIMENSIONS TO THE REINFORCING STEEL ARE TO THE ℄ OF THE BAR UNLESS OTHERWISE NOTED.
3. SEE "FOUNDATION LAYOUT" FOR FOUNDATION LOCATION AND ORIENTATION.
4. SEE CORRESPONDING BENT SHEET FOR PLACEMENT OF BARS FD TO MATCH COLUMN REINFORCING.
5. SPECIAL SHORING SHALL BE USED AS NOTED WITH THE ABILITY TO POUR AGAINST EARTH. CONTRACTOR SHALL MAINTAIN 3" MINIMUM CLEAR COVER.

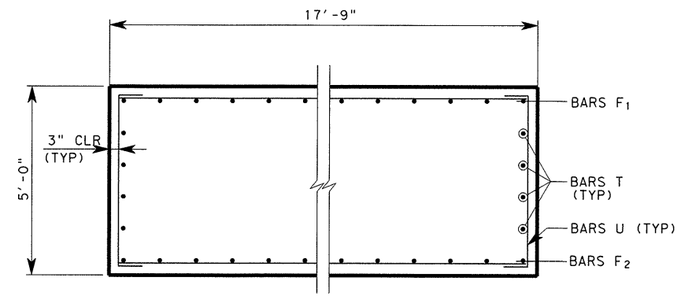

SECTION A-A

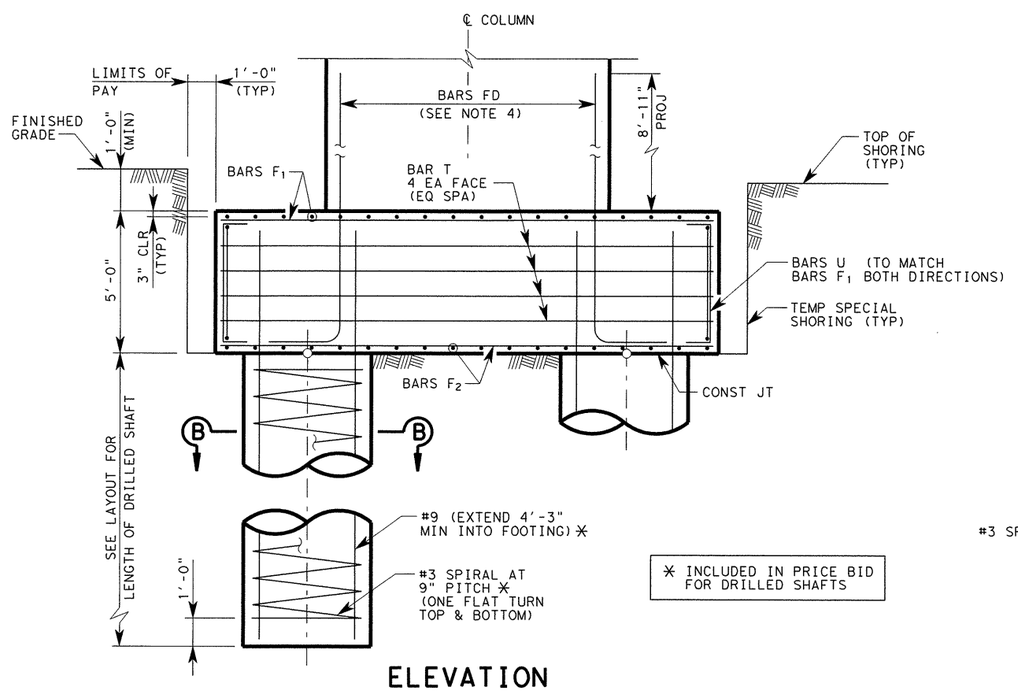

✳ INCLUDED IN PRICE BID FOR DRILLED SHAFTS

ELEVATION

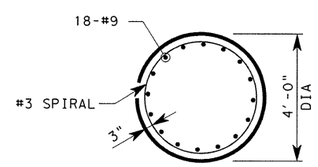

SECTION B-B

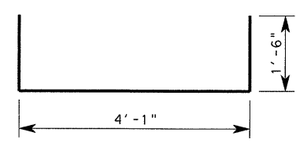

BARS U

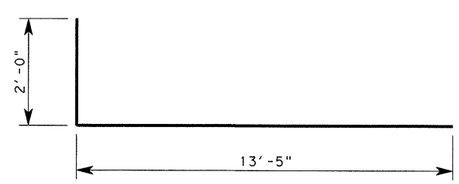

BARS FD

HL-93 LOADING

STATE OF TEXAS
OSAMA A. SHAHAWY
88476
LICENSED PROFESSIONAL ENGINEER
6/7/11

Rev. 6/29/11

REV. NO.	DATE	REVISION	BY
△			
△			
△			

PBSJ an Atkins company TBPE REG. # F-474

Texas Department of Transportation
Austin District
©2011 by TxDOT

SH 45 / O'CONNOR DRIVE EB FRONTAGE RD FOUNDATION DETAILS BENTS 9-13

SCALE: NTS — SHEET 4 OF 5

DESIGNED: RBR	FED. RD DIV. No.	STATE	PROJECT No.			HIGHWAY No.
CHECKED: OAS	6	TEXAS				LP 1/SH 45
DRAWN: RBR	STATE DISTRICT	COUNTY	CONTROL No.	SECTION No.	JOB No.	SHEET No.
CHECKED: OAS	AUSTIN	WILLIAMSON	0683	06	027	345

PLOT DRIVER: RD*11x17*PDF.plt
PEN TABLE: plotdrv*ocon.tbl
FILE: r:\trans-design\o'connor\cadd\bdg\EBFR\OC45FDebfr04.dgn
DATE: 6/2/2011 TIME: 1:40:08 PM

DATE: 6/2/2011 TIME: 1:40:09 PM

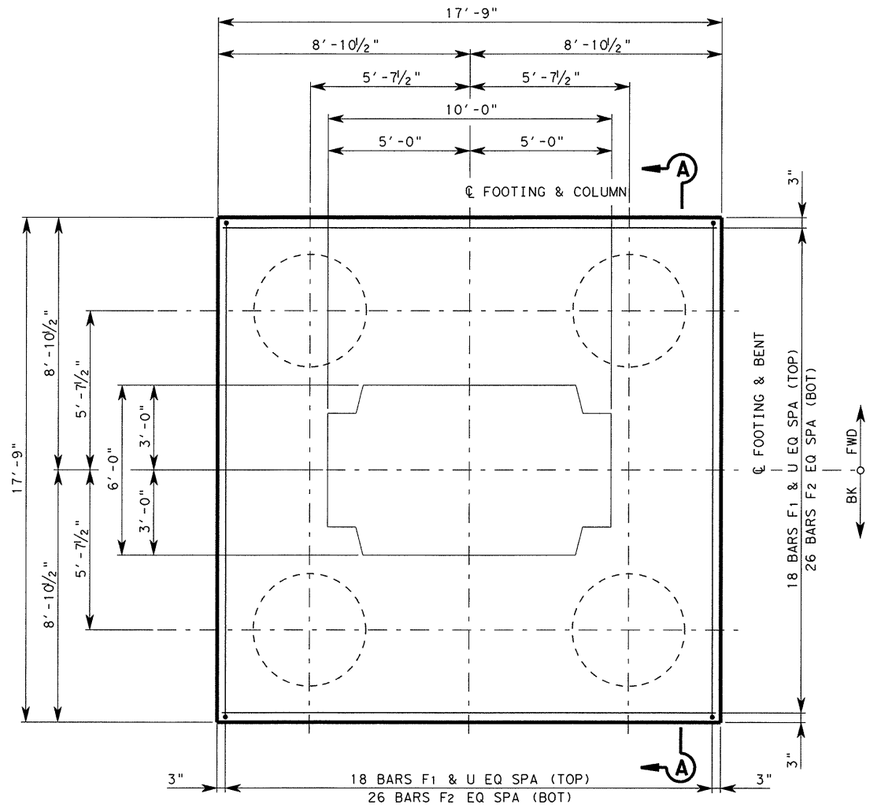

PLAN

ESTIMATED QUANTITES					
COL NO	CLASS "C" (MASS) CONC (FOOTING) (CY)	STRUCT EXCAV (CY)	TEMP SPCL SHORING (SF)	DRILL SHAFT (48"*) (LF)	CALCULATED DRILL SHAFT LOAD (EACH) (TONS)
14	58.3	87	474	152	400

BILL OF REINFORCING STEEL (TYP EACH FOOTING)				
BAR	NO.	SIZE	LENGTH	WEIGHT
F1	36	#8	17.2500	1,658
F2	52	#9	17.2500	3,050
FD1	20	#11	14.0000	1,488
FD2	28	#11	17.7500	2,641
T	16	#8	17.2500	737
U	72	#6	7.0833	766
REINFORCING STEEL			LB	10,339

* FOR CONTRACTOR'S INFORMATION ONLY

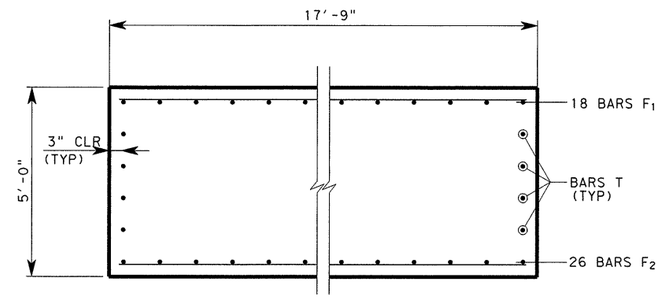

SECTION A-A

NOTES:

1. DESIGNED ACCORDING TO AASHTO LRFD BRIDGE SPECIFICATIONS, 4TH EDITION 2007 AND 2009 CURRENT INTERIMS FOR HL-93 LOADING.
2. ALL DIMENSIONS TO THE REINFORCING STEEL ARE TO THE ℄ OF THE BAR UNLESS OTHERWISE NOTED.
3. SEE "FOUNDATION LAYOUT" FOR FOUNDATION LOCATION AND ORIENTATION.
4. SEE CORRESPONDING BENT SHEET FOR PLACEMENT OF BARS FD TO MATCH COLUMN REINFORCING.
5. SPECIAL SHORING SHALL BE USED AS NOTED WITH THE ABILITY TO POUR AGAINST EARTH. CONTRACTOR SHALL MAINTAIN 3" MINIMUM CLEAR COVER.

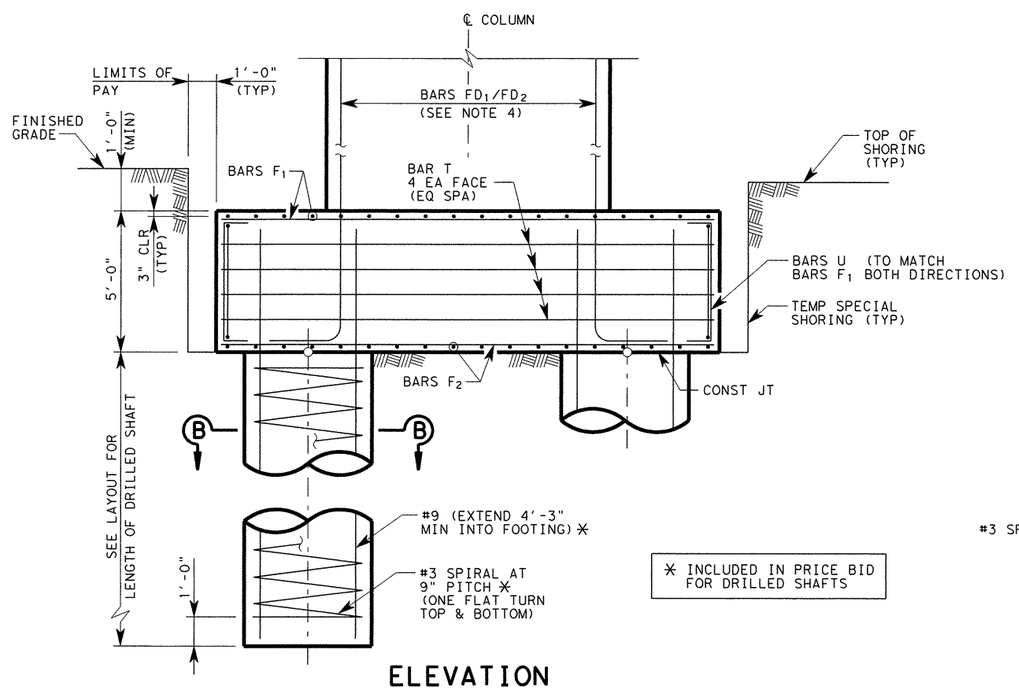

* INCLUDED IN PRICE BID FOR DRILLED SHAFTS

ELEVATION

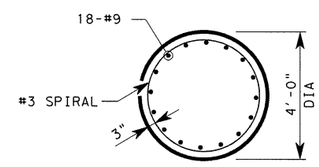

SECTION B-B

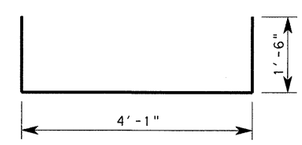

BARS U

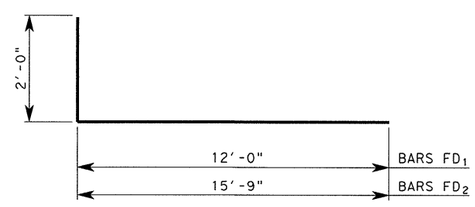

BARS FD

HL-93 LOADING

STATE OF TEXAS
OSAMA A. SHAHAWY
88476
LICENSED PROFESSIONAL ENGINEER
6/7/11

Rev. 6/29/11

REV. NO.	DATE	REVISION	BY
△			
△			
△			

PBSJ an Atkins company TBPE REG. # F-474

Texas Department of Transportation Austin District

©2011 by TxDOT

SH 45 / O'CONNOR DRIVE EB FRONTAGE RD FOUNDATION DETAILS BENT 14

SCALE: NTS SHEET 5 OF 5

DESIGNED: RBR	FED. RD DIV. No.	STATE	PROJECT No.			HIGHWAY No.
CHECKED: OAS	6	TEXAS				LP 1/SH 45
DRAWN: RBR	STATE DISTRICT	COUNTY	CONTROL No.	SECTION No.	JOB No.	SHEET No.
CHECKED: OAS	AUSTIN	WILLIAMSON	0683	06	027	346

PLOT DRIVER: RD*11x17*PDF.plt
PEN TABLE: plotord*ocon.tbl
FILE: r:\trans-design\o'connor\cadd\bdg\ebfr\OC45FDebfr05.dgn

TABLE OF ESTIMATED QUANTITIES (ABUT 1)				
BAR	NO.	SIZE	LENGTH	WEIGHT
A	10	#11	40'-7"	2,156
H	10	#6	40'-7"	610
S	63	#6	11'-2"	1,057
U	4	#6	8'-0"	48
V	42	#6	14'-7"	917
REINFORCING STEEL *			LB	4,788
CLASS "C" CONCRETE			CY	20.8

* FOR CONTRACTOR'S INFORMATION ONLY

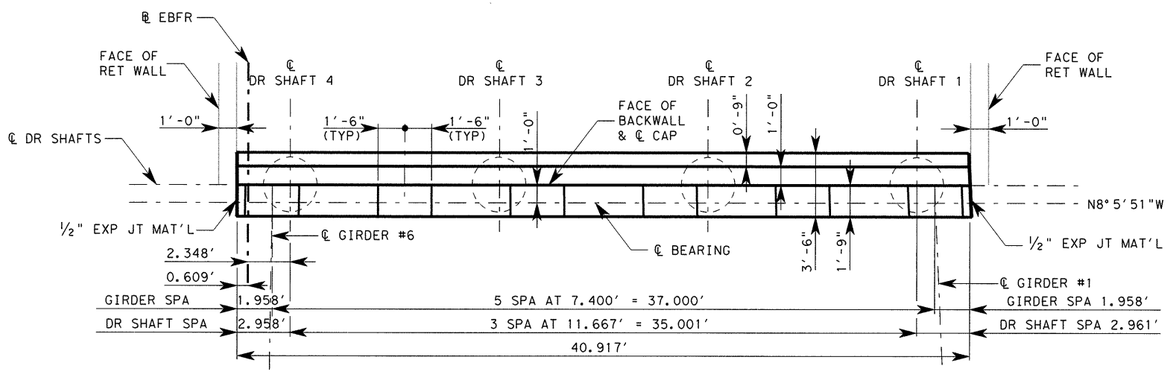

PLAN

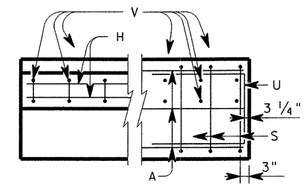

BACKWALL CAP

CORNER DETAILS

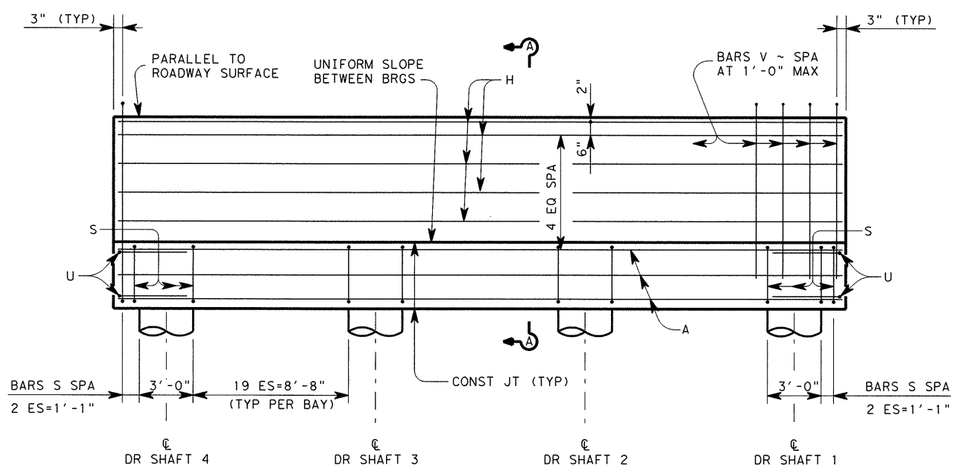

ELEVATION

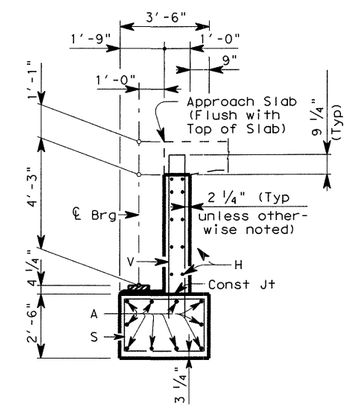

SECTION A-A

GENERAL NOTES:

1. DESIGNED ACCORDING TO AASHTO LRFD BRIDGE SPECIFICATIONS, 4TH EDITION 2007 AND 2009 CURRENT INTERIM'S FOR HL-93 LOADING.
2. CONCRETE STRENGTH SHALL BE F'C = 3,600 PSI.
3. ALL REINFORCING STEEL SHALL BE GRADE 60.
4. CALCULATED FOUNDATION LOADS = 170 TONS/ DRILLED SHAFT. SEE FOUNDATION DETAIL STANDARD SHEET, FD, FOR ALL FOUNDATION DETAILS AND NOTES.
5. SEE SEJ STANDARD SHEET FOR DETAILS AND LENGTH OF SEJ TO BE PLACED WITH ABUTMENT.

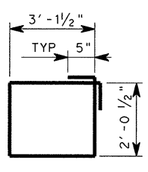

BARS S

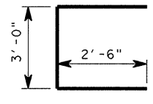

BARS U

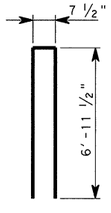

BARS V

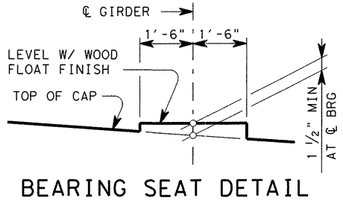

BEARING SEAT DETAIL

(BEARING SURFACE SHALL BE CLEAN AND FREE OF ALL LOOSE MATERIAL BEFORE PLACING BEARING PAD.)

HL-93 LOADING

STATE OF TEXAS
OSAMA A. SHAHAWY
88476
LICENSED PROFESSIONAL ENGINEER
4/11/11

REV. NO.	DATE	REVISION	BY
△			
△			
△			

PBSJ an Atkins company TBPE REG. # F-474

Texas Department of Transportation
Austin District
©2011 by TxDOT

SH 45 / O'CONNOR DRIVE EB FRONTAGE RD ABUTMENT 1

SCALE: NTS SHEET 1 OF 2

DESIGNED: RBR	FED. RD DIV. No.	STATE	PROJECT No.			HIGHWAY No.	
CHECKED: OAS	6	TEXAS				LP 1/SH 45	
DRAWN: RBR	STATE DISTRICT	COUNTY	CONTROL No.	SECTION No.	JOB No.	SHEET No.	
CHECKED: OAS	AUSTIN	WILLIAMSON	0683	06	027	347	

DATE: 4/11/2011 TIME: 10:35:03 AM
PLOT DRIVER: RD*11x17*PDF.plt
PEN TABLE: plotdrv*ocon.tbl
FILE: r:\trans-design\oconnor\cadd\bdg\EBFR\0C45ABebfr01.dgn

DATE: 6/2/2011 TIME: 2:32:50 PM

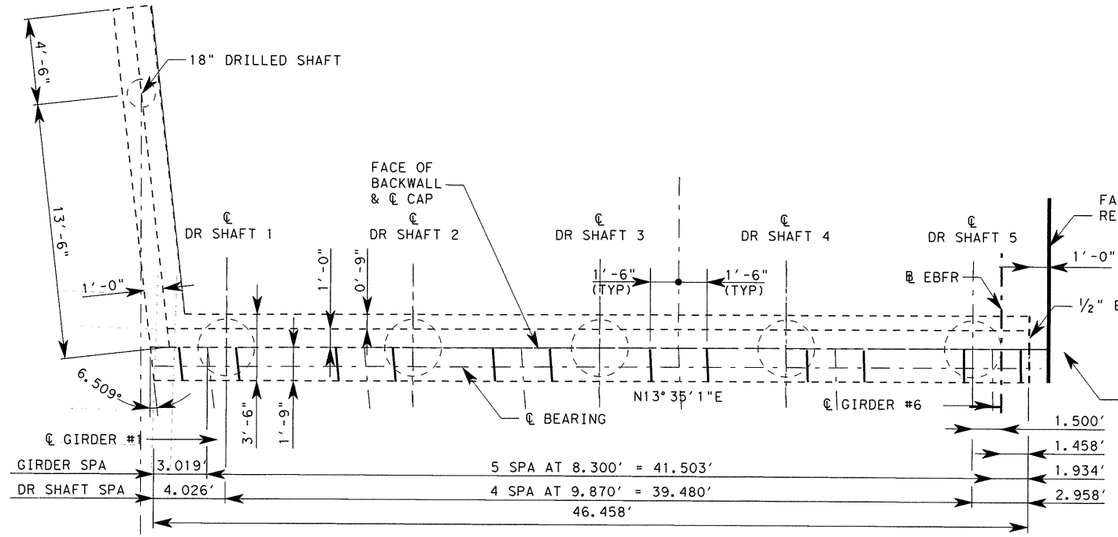

PLAN

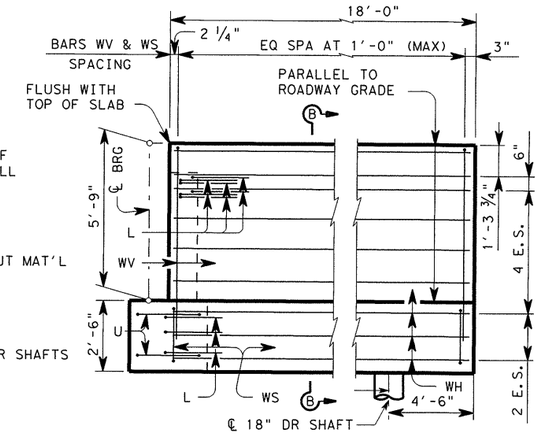

WINGWALL ELEVATION

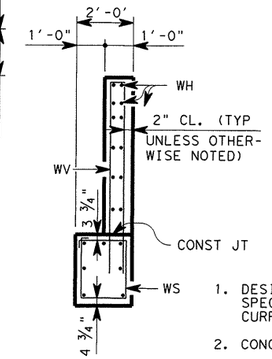

SECTION B-B

TABLE OF ESTIMATED QUANTITIES (ABUT 15)				
BAR	NO.	SIZE	LENGTH	WEIGHT
A	10	#11	46'-2"	2,451
H	10	#6	46'-2"	693
K1	8	#6	3'-0"	36
K2	4	#6	4'-0"	24
L	9	#6	4'-0"	54
S	66	#6	11'-2"	1,107
U	4	#6	8'-1"	48
V	47	#5	14'-0"	686
WH1	7	#6	19'-5"	204
WH2	12	#6	17'-8"	318
WS	19	#4	7'-8"	97
WV	19	#5	14'-3"	282
REINFORCING STEEL			LB	6,001
CLASS "C" CONCRETE			CY	30.7

* FOR CONTRACTOR'S INFORMATION ONLY

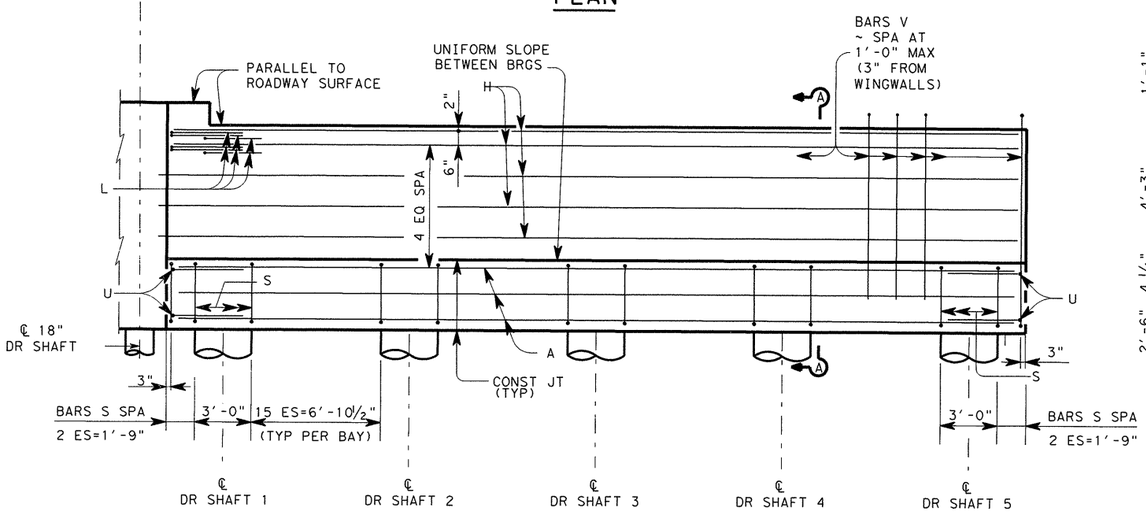

ELEVATION

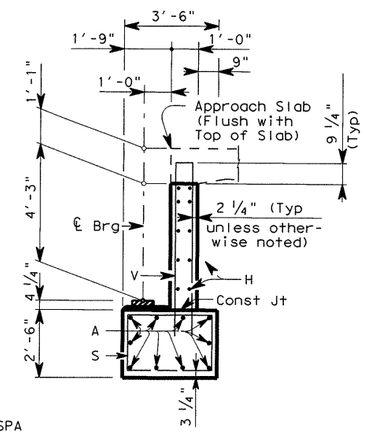

SECTION A-A

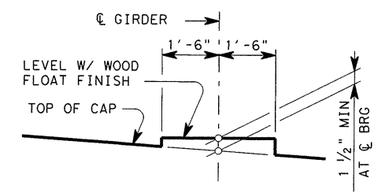

BEARING SEAT DETAIL

(BEARING SURFACE SHALL BE CLEAN AND FREE OF ALL LOOSE MATERIAL BEFORE PLACING BEARING PAD.)

GENERAL NOTES:

1. DESIGNED ACCORDING TO AASHTO LRFD BRIDGE SPECIFICATIONS, 4TH EDITION 2007 AND 2009 CURRENT INTERIM'S FOR HL-93 LOADING.
2. CONCRETE STRENGTH SHALL BE F'C = 3,600 PSI.
3. ALL REINFORCING STEEL SHALL BE GRADE 60.
4. CALCULATED FOUNDATION LOADS = 135 TONS/ DRILLED SHAFT. SEE FOUNDATION DETAIL STANDARD SHEET, FD, FOR ALL FOUNDATION DETAILS AND NOTES.
5. SEE SEJ STANDARD SHEET FOR DETAILS AND LENGTH OF SEJ TO BE PLACED WITH ABUTMENT.

HL-93 LOADING

STATE OF TEXAS
OSAMA A. SHAHAWY
88476
LICENSED PROFESSIONAL ENGINEER
6/7/11

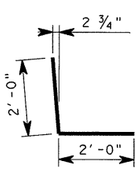

BARS L

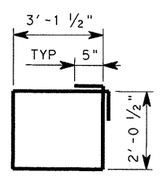

BARS S

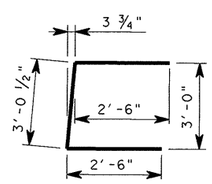

BARS U

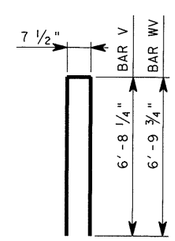

BARS V & WV

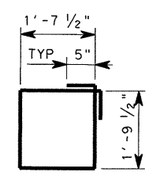

BARS WS

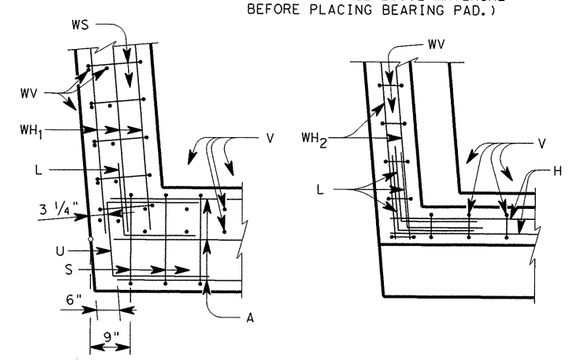

CAP BACKWALL

SKEWED CORNER DETAILS

Rev. 6/29/11

REV. No.	DATE	REVISION	BY
△			
△			
△			

PBSJ an Atkins company TBPE REG. # F-474

Texas Department of Transportation Austin District

©2011 by TxDOT

SH 45 / O'CONNOR DRIVE

EB FRONTAGE RD ABUTMENT 15

SCALE: NTS SHEET 2 OF 2

DESIGNED: RBR	FED. RD DIV. No.	STATE	PROJECT No.			HIGHWAY No.
CHECKED: OAS	6	TEXAS				LP 1/SH 45
DRAWN: RBR	STATE DISTRICT	COUNTY	CONTROL No.	SECTION No.	JOB No.	SHEET No.
CHECKED: OAS	AUSTIN	WILLIAMSON	0683	06	027	348

PLOT DRIVER: RD*11x17*PDF.plt
PEN TABLE: plotordr*ocon.tbl
FILE: r:\trans-design\o'connor\cadd\bdg\EBFR\OC45ABebfr02.dgn

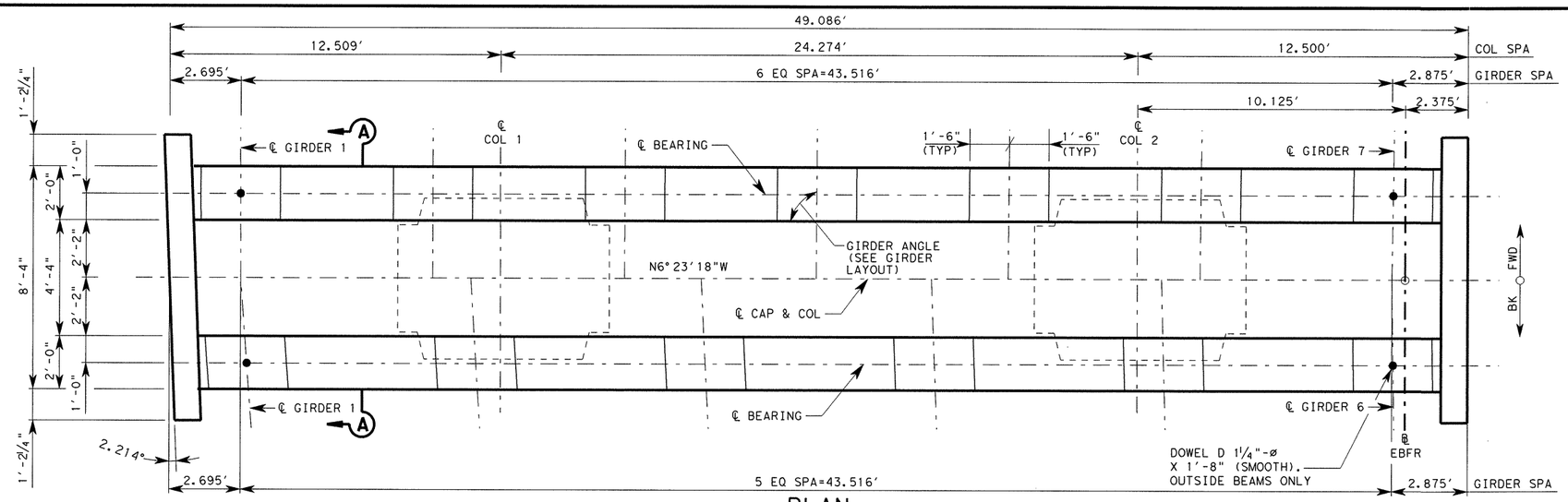

PLAN

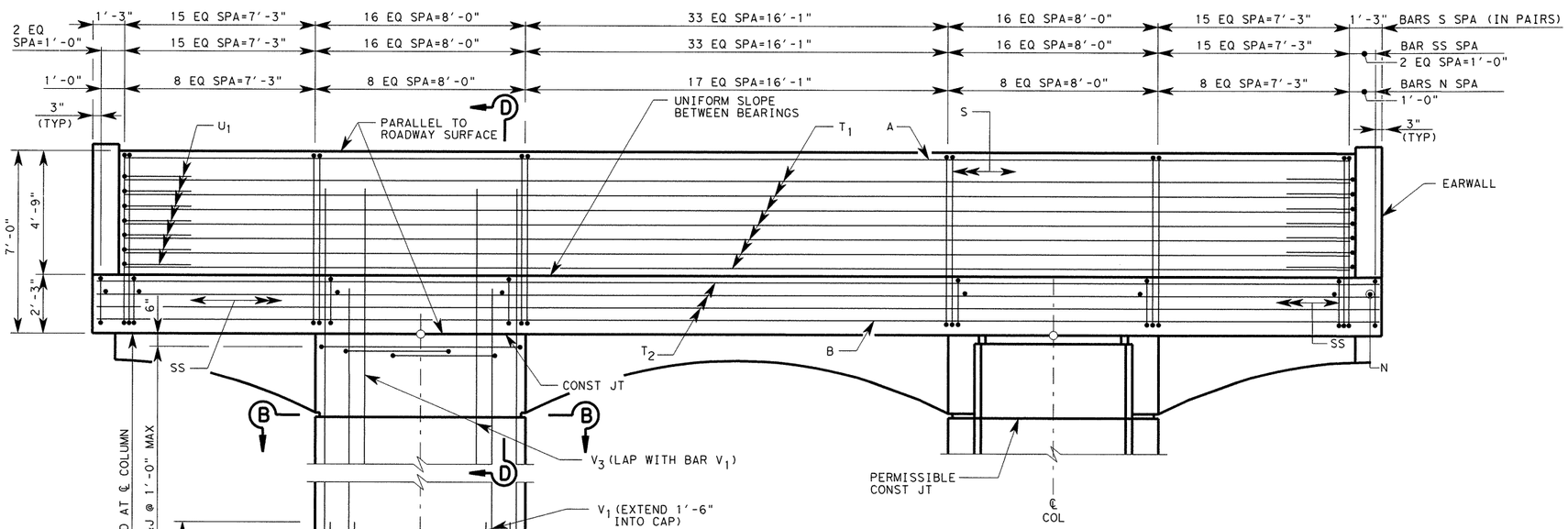

ELEVATION

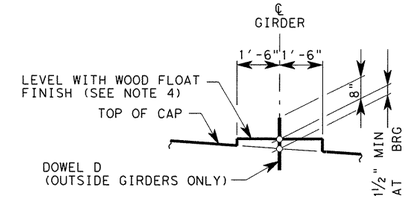

BEARING SEAT ELEVATION

BEARING SURFACE MUST BE CLEAN AND FREE OF ALL LOOSE MATERIAL BEFORE PLACING BEARING PAD

GENERAL NOTES:

1. DESIGNED ACCORDING TO AASHTO LRFD BRIDGE SPECIFICATIONS, 4TH EDITION 2007 AND 2009 CURRENT INTERIM'S FOR HL-93 LOADING.
2. CONCRETE STRENGTH F'C=3600 PSI.
3. ALL REINFORCING SHALL BE GRADE 60.
4. BEARING SURFACE SHALL BE CLEAN AND FREE OF ALL LOOSE MATERIAL BEFORE PLACING BEARING PAD.
5. SEE "AESTHETIC TREATMENT REINFORCEMENT DETAILS" SHEET FOR ARCH REINFORCEMENT AND AESTHETIC REVEAL DETAIL.

HL-93 LOADING

STATE OF TEXAS
OSAMA A. SHAHAWY
88476
LICENSED PROFESSIONAL ENGINEER
4/11/11

REV. No.	DATE	REVISION	BY
△			
△			
△			

PBSJ an Atkins company TBPE REG. # F-474

Texas Department of Transportation Austin District
©2011 by TxDOT

SH 45 / O'CONNOR DRIVE EB FRONTAGE RD BENT 2

SCALE: NTS SHEET 1 OF 16

DESIGNED: RBR	FED. RD DIV. No.	STATE	PROJECT No.		HIGHWAY No.
CHECKED: OAS	6	TEXAS			LP 1/SH 45

DRAWN: RBR	STATE DISTRICT	COUNTY	CONTROL No.	SECTION No.	JOB No.	SHEET No.
CHECKED: OAS	AUSTIN	WILLIAMSON	0683	06	027	349

DATE: 4/11/2011 TIME: 10:35:06 AM
PLOT DRIVER: RD*11x17*PDF.plt
PEN TABLE: plotordr*ocon.tbl
FILE: r:\trans-design\o'connor\cadd\bdg\EBFR\OC45BTebfr01.dgn

DATE: 6/2/2011 TIME: 1:40:13 PM

① TABLE OF VARIABLES COLUMN QUANTITIES

COL	COLUMN HEIGHT "H"	BARS V_1 #11			BARS V_2 #11			BARS V_3 #8			BARS Z_1 #5 18'-8"		BARS Z_2 #5 22'-4"		BARS J #4 8'-5"		TOTAL ESTIMATED ② QUANTITIES PER COLUMN	
		NO.	LENGTH	WEIGHT (LB)	NO.	LENGTH	WEIGHT (LB)	NO.	LENGTH	WEIGHT (LB)	NO.	WEIGHT (LB)	NO.	WEIGHT (LB)	NO.	WEIGHT (LB)	REINF STEEL * LB	CLASS "C" (MASS) CONC (BENT) CY
1	16	16	17'-6"	1488	24	21'-3"	2710	16	10'-6"	449	33	642	17	396	17	96	5781	25.78
2	16	16	17'-6"	1488	24	21'-3"	2710	16	10'-6"	449	33	642	17	396	17	96	5781	25.78

* FOR CONTRACTOR'S INFORMATION ONLY

① ADJUST NUMBER OF BARS Z_2 AND J BY 1 AND NUMBER OF BARS Z_1 BY 2 FOR EACH 1 LF VARIATION IN "H" VALUE.

② ESTIMATED QUANTITIES ARE BASED ON HEIGHT SHOWN ON BRIDGE LAYOUT.

TABLE OF ETIMATED QUANTITIES (BENT CAP)

BAR	NO.	SIZE	LENGTH	WEIGHT
A	10	#11	46'-9"	2,484
B	10	#11	48'-9"	2,590
D	4	1 1/4 "DIA	1'-8"	29
N	52	#4	7'-7"	263
P	48	#5	6'-1"	305
R	24	#4	12'-1"	194
S	160	#5	19'-3"	3,212
SS	99	#6	20'-6"	3,046
T1	14	#6	45'-5"	955
T2	8	#6	48'-9"	586
U	14	#6	9'-0"	189
REINFORCING STEEL			LB	13,854
CLASS "C" (MASS) CONC (BENT)			CY	71.9

* FOR CONTRACTOR'S INFORMATION ONLY

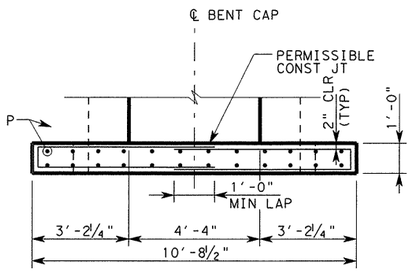

PLAN

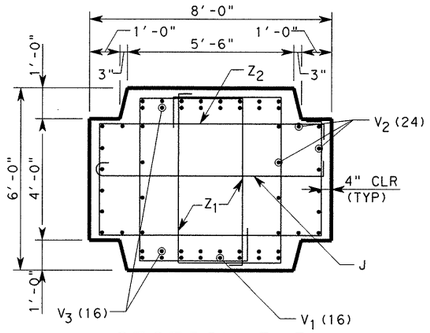

SECTION B-B

* VARIES DEPENDING ON ROADWAY GRADE.

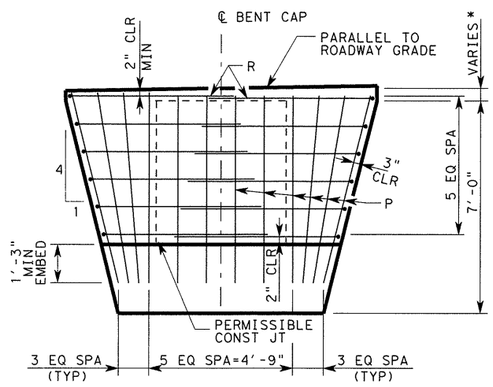

ELEVATION

EARWALL DETAIL

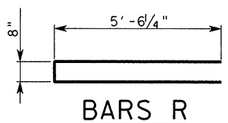

BARS R

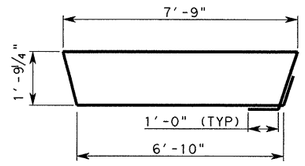

BARS SS

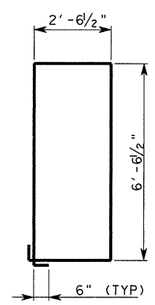

BARS S

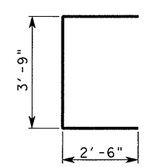

BARS U

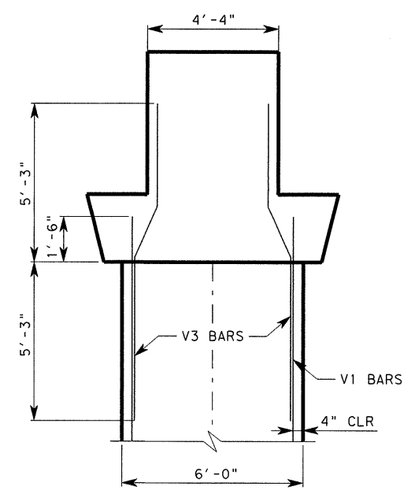

SECTION D-D

(CAP REINFORCEMENT NOT SHOWN FOR CLARITY)

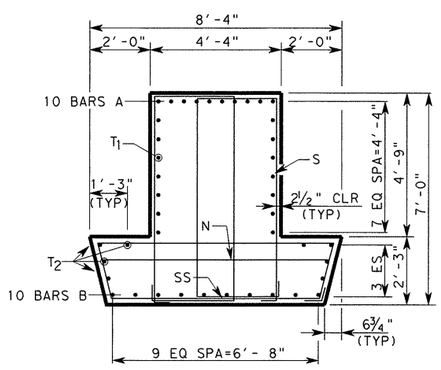

SECTION A-A

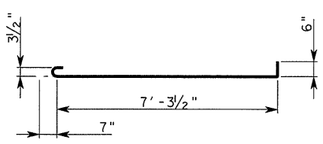

BARS J

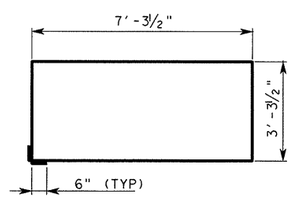

BARS Z2

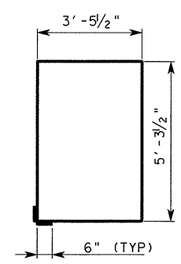

BARS Z1

HL-93 LOADING

STATE OF TEXAS
OSAMA A. SHAHAWY
88476
LICENSED PROFESSIONAL ENGINEER
6/7/11

REV. No.	DATE	REVISION	BY
△			
△			
△			

PBSJ an Atkins company TBPE REG. # F-474

Texas Department of Transportation Austin District

©2011 by TxDOT

SH 45 / O'CONNOR DRIVE EB FRONTAGE RD BENT 2

SCALE: NTS SHEET 2 OF 16

DESIGNED: RBR	FED. RD DIV. No.	STATE	PROJECT No.			HIGHWAY No.
CHECKED: OAS	6	TEXAS				LP 1/SH 45
DRAWN: RBR	STATE DISTRICT	COUNTY	CONTROL No.	SECTION No.	JOB No.	SHEET No.
CHECKED: OAS	AUSTIN	WILLIAMSON	0683	06	027	350

Rev. 6/29/11

PLOT DRIVER: RD*11x17*PDF.plt
PEN TABLE: plotordr*ocon.tbl
FILE: r:\trans-design\o'connor\cadd\bdg\EBFR\OC45BTebfr02.dgn

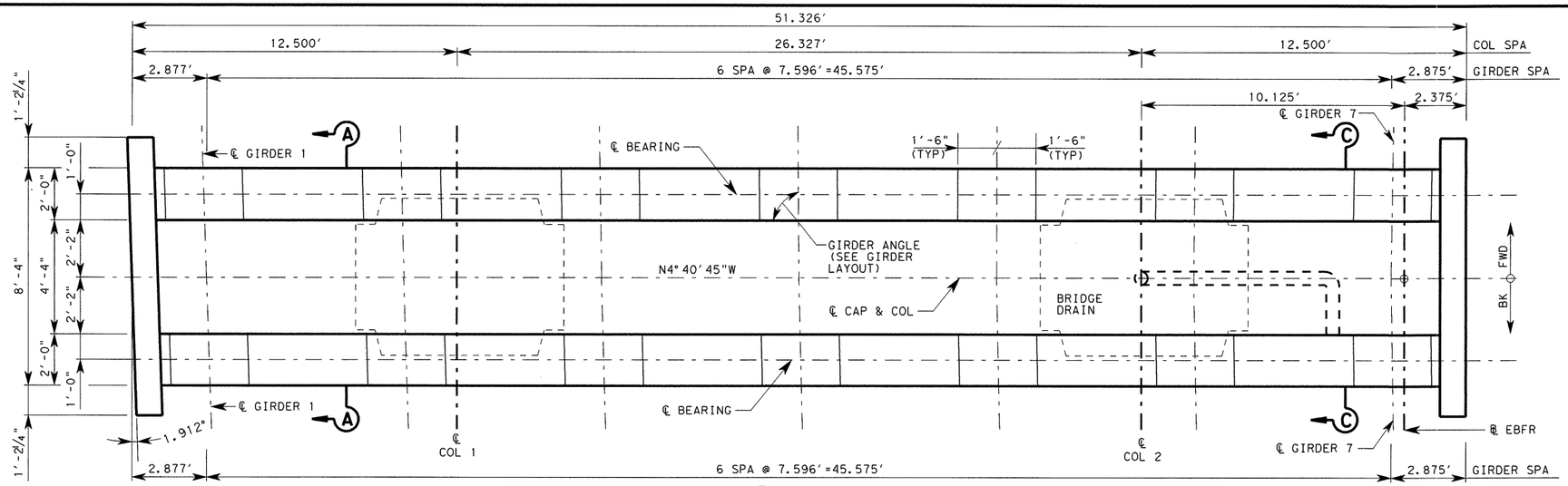

PLAN

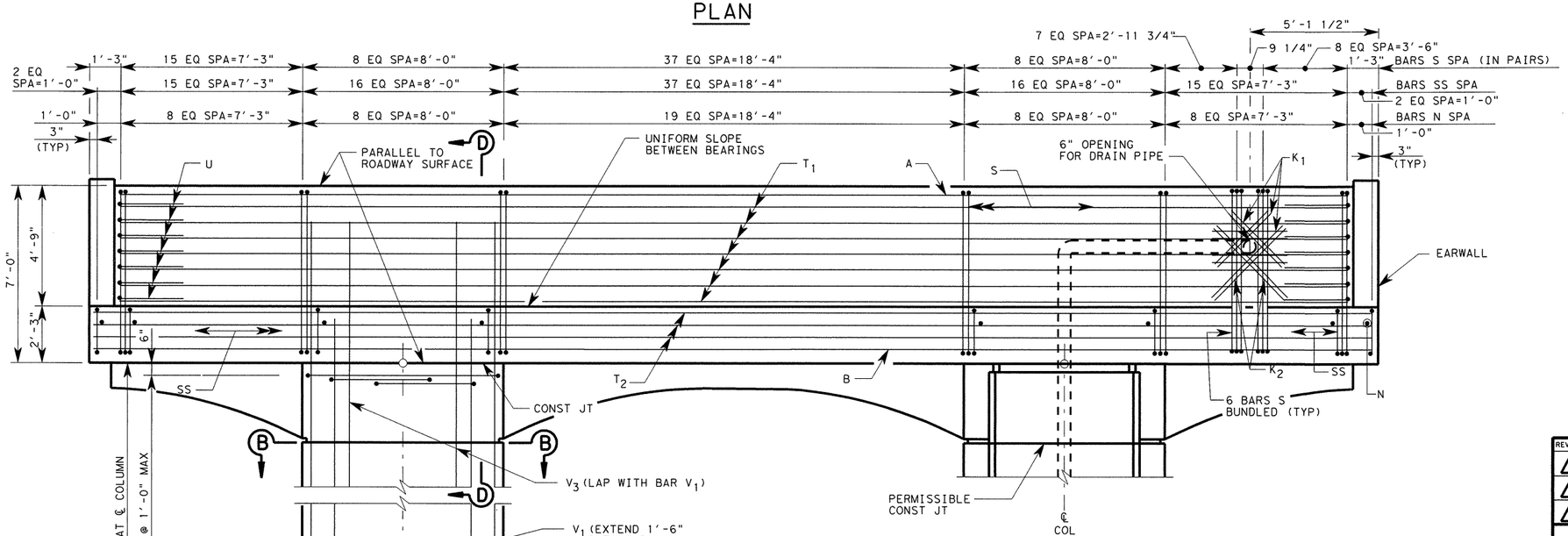

ELEVATION

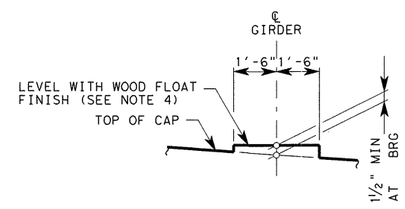

BEARING SEAT ELEVATION

BEARING SURFACE MUST BE CLEAN AND FREE OF ALL LOOSE MATERIAL BEFORE PLACING BEARING PAD

GENERAL NOTES:

1. DESIGNED ACCORDING TO AASHTO LRFD BRIDGE SPECIFICATIONS, 4TH EDITION 2007 AND 2009 CURRENT INTERIM'S FOR HL-93 LOADING.
2. CONCRETE STRENGTH F'C=3600 PSI.
3. ALL REINFORCING SHALL BE GRADE 60.
4. BEARING SURFACE SHALL BE CLEAN AND FREE OF ALL LOOSE MATERIAL BEFORE PLACING BEARING PAD.
5. SEE "AESTHETIC TREATMENT REINFORCEMENT DETAILS" SHEET FOR ARCH REINFORCEMENT AND AESTHETIC REVEAL DETAIL.
6. SEE "DRAIN DETAILS" SHEET FOR DETAILS AND DIMENSIONS NOT SHOWN.

* ADJUST BARS S, SS, AND N SPACING TO CLEAR DRAIN PIPE AS NEEDED.

HL-93 LOADING

STATE OF TEXAS
OSAMA A. SHAHAWY
88476
LICENSED PROFESSIONAL ENGINEER
4/11/11

REV. No.	DATE	REVISION	BY
△			
△			
△			

PBSJ an Atkins company TBPE REG. # F-474

Texas Department of Transportation
Austin District
©2011 by TxDOT

SH 45 / O'CONNOR DRIVE EB FRONTAGE RD BENT 3

SCALE: NTS — SHEET 3 OF 16

DESIGNED: RBR	FED. RD DIV. No.	STATE	PROJECT No.			HIGHWAY No.
CHECKED: OAS	6	TEXAS				LP 1/SH 45
DRAWN: RBR	STATE DISTRICT	COUNTY	CONTROL No.	SECTION No.	JOB No.	SHEET No.
CHECKED: OAS	AUSTIN	WILLIAMSON	0683	06	027	351

DATE: 4/11/2011 TIME: 10:35:09 AM
PLOT DRIVER: RD*11x17*PDF.plt
PEN TABLE: p:\otordr*ocon.tbl
FILE: r:\trans-design\o'connor\cadd\bdg\EBFR\0C45BTebfr03.dgn

DATE: 6/2/2011 TIME: 1:40:15 PM

① TABLE OF VARIABLES COLUMN QUANTITIES

COL	COLUMN HEIGHT "H"	BARS V_1 #11 NO.	BARS V_1 #11 LENGTH	BARS V_1 #11 WEIGHT (LB)	BARS V_2 #11 NO.	BARS V_2 #11 LENGTH	BARS V_2 #11 WEIGHT (LB)	BARS V_3 #8 NO.	BARS V_3 #8 LENGTH	BARS V_3 #8 WEIGHT (LB)	BARS Z_1 #5 NO.	BARS Z_1 #5 18'-8" WEIGHT (LB)	BARS Z_2 #5 NO.	BARS Z_2 #5 22'-4" WEIGHT (LB)	BARS J #4 NO.	BARS J #4 8'-5" WEIGHT (LB)	TOTAL ESTIMATED ② QUANTITIES PER COLUMN REINF STEEL * LB	CLASS "C" (MASS) CONC (BENT) CY
1	14	16	15'-6"	1318	24	19'-3"	2455	16	10'-6"	449	30	584	15	349	15	84	5239	22.56
2	14	16	15'-6"	1318	24	19'-3"	2455	16	10'-6"	449	30	584	15	349	15	84	5239	22.56

* FOR CONTRACTOR'S INFORMATION ONLY

① ADJUST NUMBER OF BARS Z_2 AND J BY 1 AND NUMBER OF BARS Z_1 BY 2 FOR EACH 1 LF VARIATION IN "H" VALUE.

② ESTIMATED QUANTITIES ARE BASED ON HEIGHT SHOWN ON BRIDGE LAYOUT.

TABLE OF ETIMATED QUANTITIES (BENT CAP)

BAR	NO.	SIZE	LENGTH	WEIGHT
A	12	#11	48'-12"	3,124
B	10	#11	50'-12"	2,709
K1	8	#6	3'-0"	36
K2	4	#6	4'-0"	24
N	54	#4	7'-7"	274
P	48	#5	6'-1"	305
R	24	#4	12'-1"	194
S	158	#5	19'-3"	3,172
SS	103	#6	20'-6"	3,170
T1	14	#6	47'-8"	1,002
T2	8	#6	51'-0"	613
U	14	#6	9'-0"	189
REINFORCING STEEL *			LB	14,811
CLASS "C" (MASS) CONC (BENT)			CY	75.0

* FOR CONTRACTOR'S INFORMATION ONLY

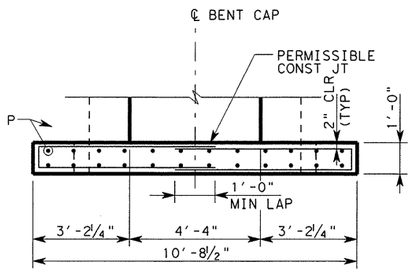

PLAN

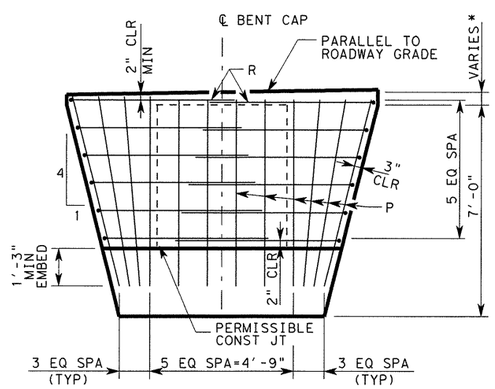

ELEVATION
EARWALL DETAIL

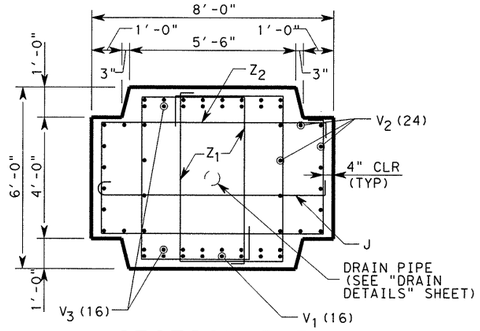

SECTION B-B

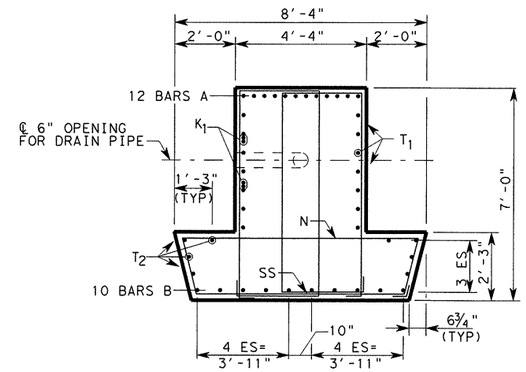

SECTION C-C

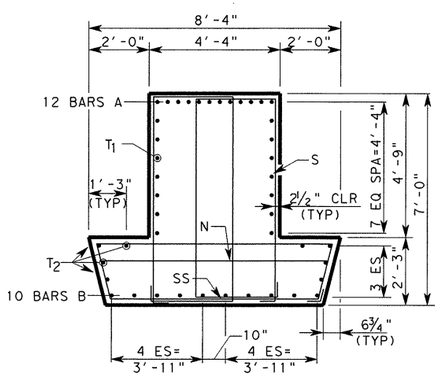

SECTION A-A

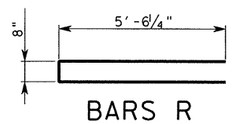

BARS R

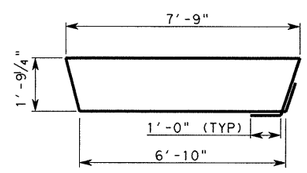

BARS SS

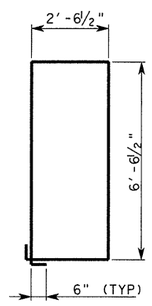

BARS S

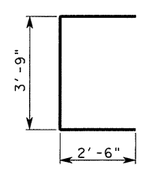

BARS U

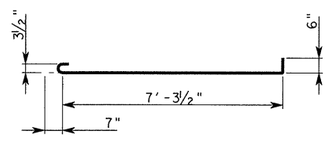

BARS J

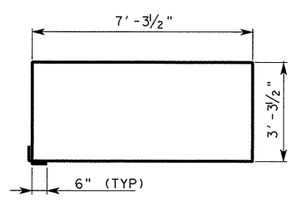

BARS Z2

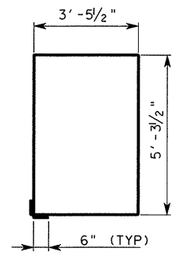

BARS Z1

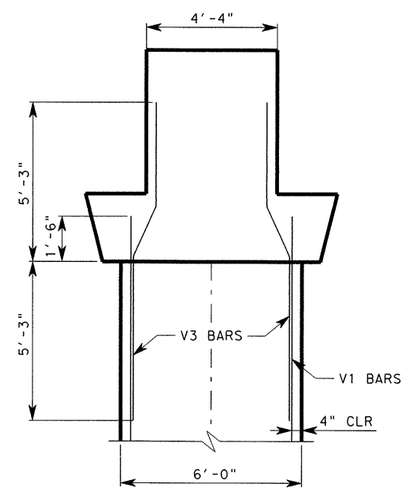

SECTION D-D
(CAP REINFORCEMENT NOT SHOWN FOR CLARITY)

HL-93 LOADING

STATE OF TEXAS
OSAMA A. SHAHAWY
88476
LICENSED PROFESSIONAL ENGINEER
6/7/11

REV. No.	DATE	REVISION	BY
△			
△			
△			

PBSJ an Atkins company TBPE REG. # F-474

Texas Department of Transportation
Austin District
©2011 by TxDOT

SH 45 / O'CONNOR DRIVE
EB FRONTAGE RD
BENT 3

SCALE: NTS SHEET 4 OF 16

DESIGNED: RBR	FED. RD DIV. No.	STATE	PROJECT No.			HIGHWAY No.
CHECKED: OAS	6	TEXAS				LP 1/SH 45
DRAWN: RBR	STATE DISTRICT	COUNTY	CONTROL No.	SECTION No.	JOB No.	SHEET No.
CHECKED: OAS	AUSTIN	WILLIAMSON	0683	06	027	352

Rev. 6/29/11

PLOT DRIVER: RD*11x17*PDF.plt
PEN TABLE: plotordr*ocon.tbl
FILE: r:\trans-design\o'connor\cadd\bdg\EBFR\OC45BIebfr04.dgn

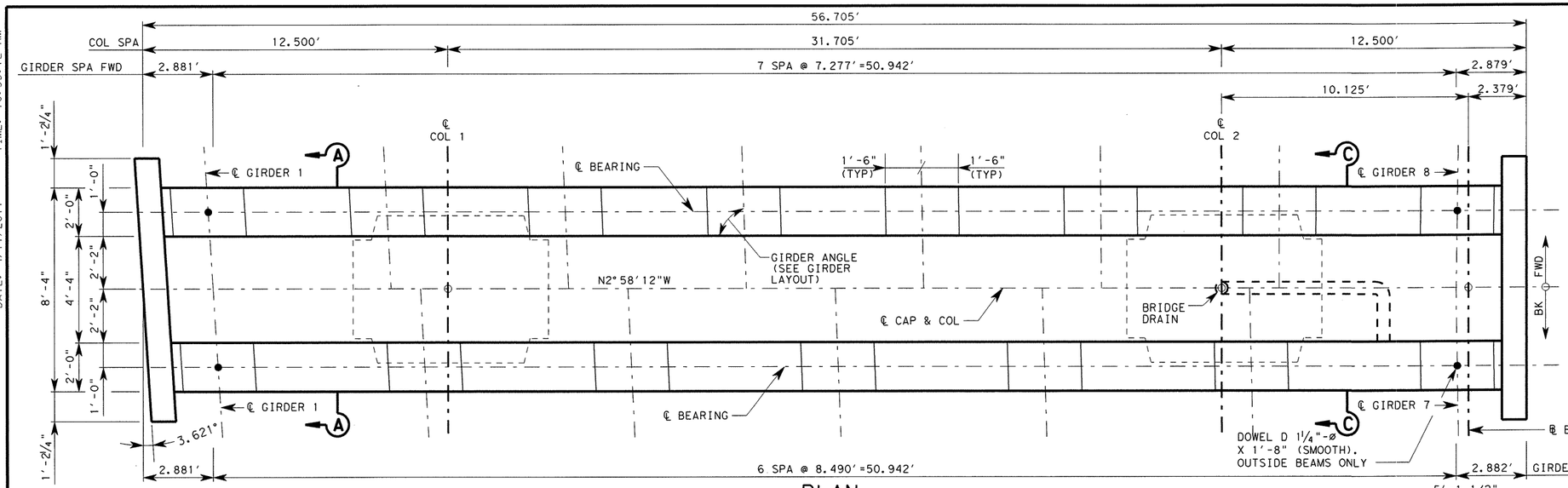

PLAN

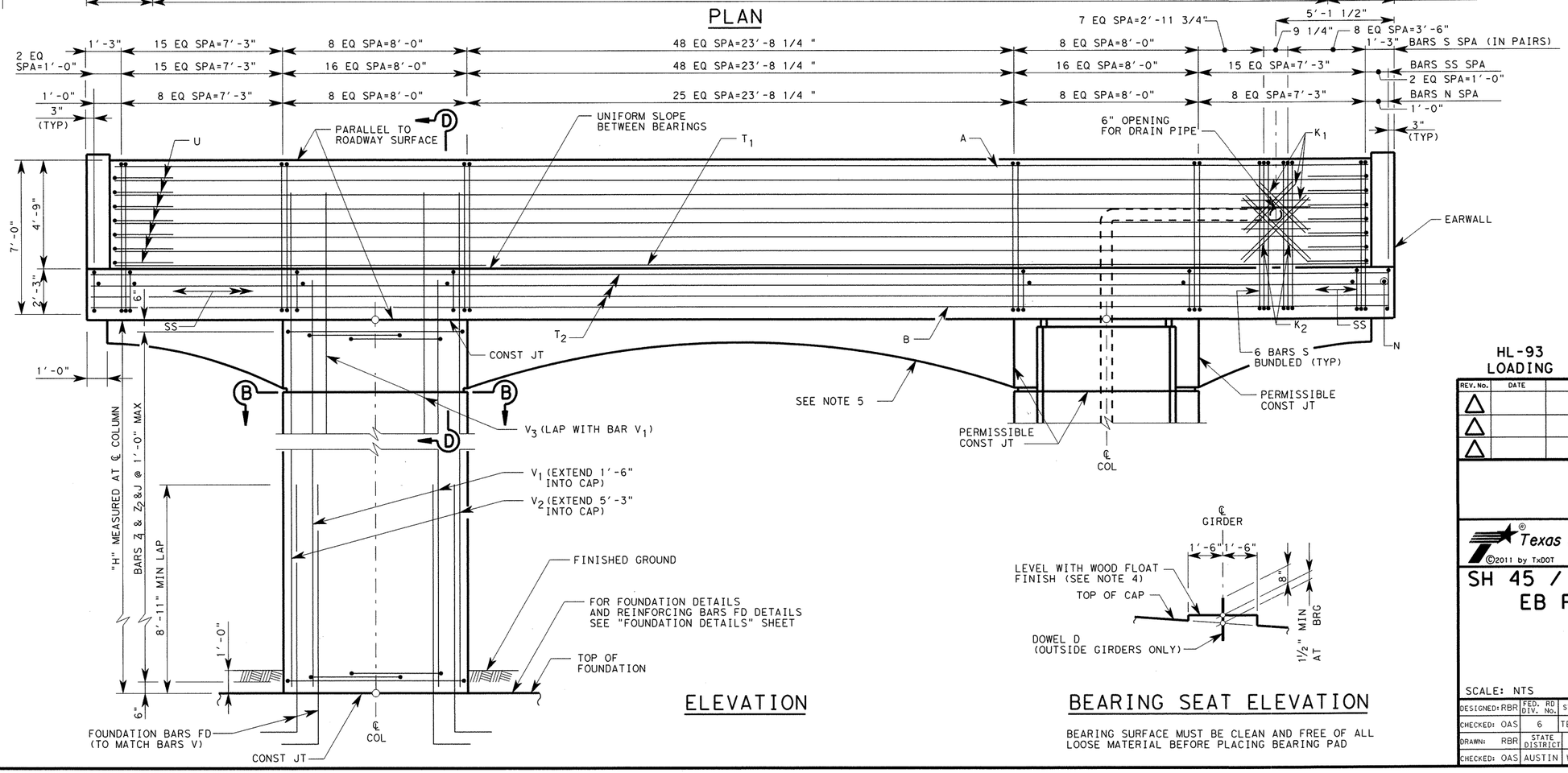

ELEVATION

BEARING SEAT ELEVATION

BEARING SURFACE MUST BE CLEAN AND FREE OF ALL LOOSE MATERIAL BEFORE PLACING BEARING PAD

GENERAL NOTES:

1. DESIGNED ACCORDING TO AASHTO LRFD BRIDGE SPECIFICATIONS, 4TH EDITION 2007 AND 2009 CURRENT INTERIM'S FOR HL-93 LOADING.
2. CONCRETE STRENGTH F'C=3600 PSI.
3. ALL REINFORCING SHALL BE GRADE 60.
4. BEARING SURFACE SHALL BE CLEAN AND FREE OF ALL LOOSE MATERIAL BEFORE PLACING BEARING PAD.
5. SEE "AESTHETIC TREATMENT REINFORCEMENT DETAILS" SHEET FOR ARCH REINFORCEMENT AND AESTHETIC REVEAL DETAIL.
6. SEE "DRAIN DETAILS" SHEET FOR DETAILS AND DIMENSIONS NOT SHOWN.

* ADJUST BARS S, SS, AND N SPACING TO CLEAR DRAIN PIPE AS NEEDED.

STATE OF TEXAS
OSAMA A. SHAHAWY
88476
LICENSED PROFESSIONAL ENGINEER
4/11/11

HL-93 LOADING

REV. No.	DATE	REVISION	BY
△			
△			
△			

PBSJ an Atkins company TBPE REG. # F-474

Texas Department of Transportation Austin District
©2011 by TxDOT

SH 45 / O'CONNOR DRIVE EB FRONTAGE RD BENT 4

SCALE: NTS — SHEET 5 OF 16

DESIGNED: RBR	FED. RD DIV. No.	STATE	PROJECT No.			HIGHWAY No.
CHECKED: OAS	6	TEXAS				LP 1/SH 45
DRAWN: RBR	STATE DISTRICT	COUNTY	CONTROL No.	SECTION No.	JOB No.	SHEET No.
CHECKED: OAS	AUSTIN	WILLIAMSON	0683	06	027	353

DATE: 4/11/2011 TIME: 10:35:12 AM
PLOT DRIVER: RD*11x17*PDF.plt
PEN TABLE: plotordr*ocon.tbl
FILE: r:\trans-design\o'connor\cadd\bdg\EBFR\OC45BTebfr-05.dgn

① TABLE OF VARIABLES COLUMN QUANTITIES

COL	COLUMN HEIGHT "H"	BARS V_1 #11 NO.	BARS V_1 #11 LENGTH	BARS V_1 #11 WEIGHT (LB)	BARS V_2 #11 NO.	BARS V_2 #11 LENGTH	BARS V_2 #11 WEIGHT (LB)	BARS V_3 #8 NO.	BARS V_3 #8 LENGTH	BARS V_3 #8 WEIGHT (LB)	BARS Z_1 #5 18'-8" NO.	BARS Z_1 WEIGHT (LB)	BARS Z_2 #5 22'-4" NO.	BARS Z_2 WEIGHT (LB)	BARS J #4 8'-5" NO.	BARS J WEIGHT (LB)	TOTAL ESTIMATED ② QUANTITIES PER COLUMN: REINF STEEL * LB	TOTAL ESTIMATED ② QUANTITIES PER COLUMN: CLASS "C" (MASS) CONC (BENT) CY
1	17	16	18'-6"	1573	24	22'-3"	2837	16	10'-6"	449	34	662	17	396	17	96	6013	27.39
2	17	16	18'-6"	1573	24	22'-3"	2837	16	10'-6"	449	34	662	17	396	17	96	6013	27.39

* FOR CONTRACTOR'S INFORMATION ONLY

① ADJUST NUMBER OF BARS Z_2 AND J BY 1 AND NUMBER OF BARS Z_1 BY 2 FOR EACH 1 LF VARIATION IN "H" VALUE.

② ESTIMATED QUANTITIES ARE BASED ON HEIGHT SHOWN ON BRIDGE LAYOUT.

TABLE OF ETIMATED QUANTITIES (BENT CAP)

BAR	NO.	SIZE	LENGTH	WEIGHT
A	10	#11	54'-5"	2,889
B	10	#11	56'-5"	2,995
D	4	1 1/4 " DIA	1'-8"	29
K1	8	#6	3'-0"	36
K2	4	#6	4'-0"	24
N	60	#4	7'-7"	304
P	48	#5	6'-1"	305
R	24	#4	12'-1"	194
S	196	#5	19'-3"	3,935
SS	113	#6	20'-6"	3,477
T1	14	#6	51'-1"	1,073
T2	8	#6	54'-5"	653
U	14	#6	9'-0"	189
REINFORCING STEEL *			LB	16,103
CLASS "C" (MASS) CONC (BENT)			CY	82.7

* FOR CONTRACTOR'S INFORMATION ONLY

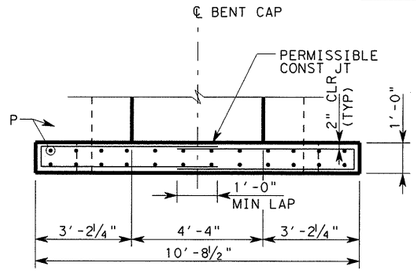

PLAN

* VARIES DEPENDING ON ROADWAY GRADE.

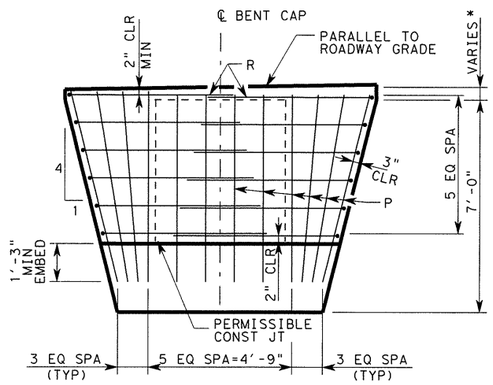

ELEVATION

EARWALL DETAIL

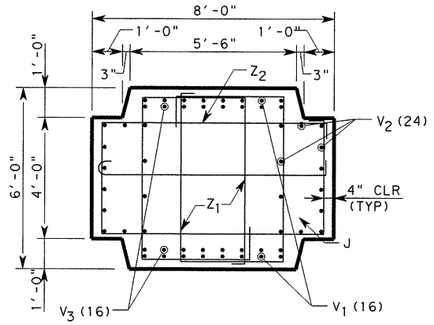

SECTION B-B

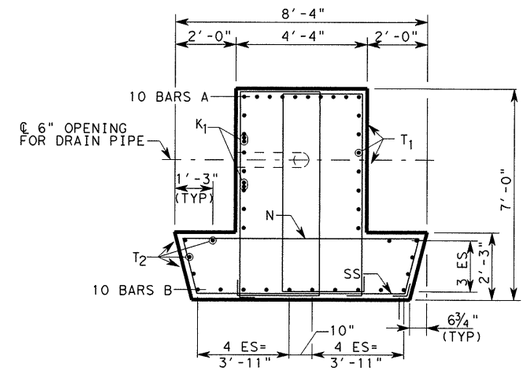

SECTION C-C

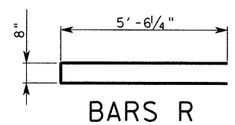

BARS R

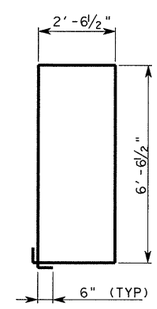

BARS S

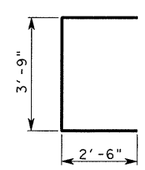

BARS U

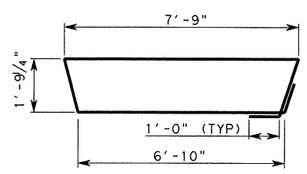

BARS SS

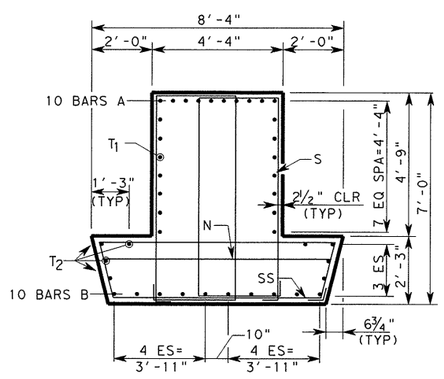

SECTION A-A

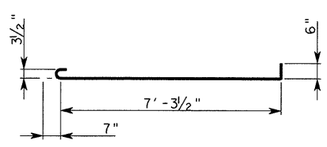

BARS J

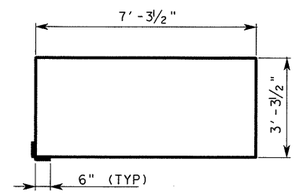

BARS Z2

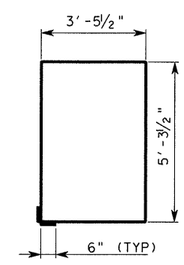

BARS Z1

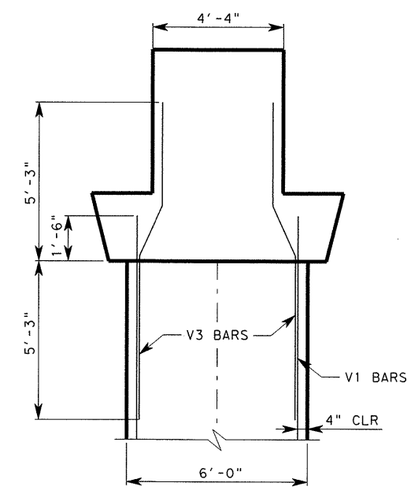

SECTION D-D

(CAP REINFORCEMENT NOT SHOWN FOR CLARITY)

HL-93 LOADING

STATE OF TEXAS — OSAMA A. SHAHAWY — 88476 — LICENSED PROFESSIONAL ENGINEER — 6/7/11

REV. No.	DATE	REVISION	BY
△			
△			
△			

PBSJ an Atkins company TBPE REG. # F-474

Texas Department of Transportation Austin District

©2011 by TxDOT

SH 45 / O'CONNOR DRIVE EB FRONTAGE RD BENT 4

SCALE: NTS — SHEET 6 OF 16

DESIGNED: RBR	FED. RD DIV. No.	STATE	PROJECT No.			HIGHWAY No.
CHECKED: OAS	6	TEXAS				LP 1/SH 45
DRAWN: RBR	STATE DISTRICT	COUNTY	CONTROL No.	SECTION No.	JOB No.	SHEET No.
CHECKED: OAS	AUSTIN	WILLIAMSON	0683	06	027	354

REV. 6/29/11

DATE: 6/2/2011 TIME: 1:40:17 PM
PLOT DRIVER: RD*11x17*PDF.plt
PEN TABLE: plotordr*ocon.tbl
FILE: r:\trans-design\o'connor\cadd\bdg\EBFR\OC45BTebfr06.dgn

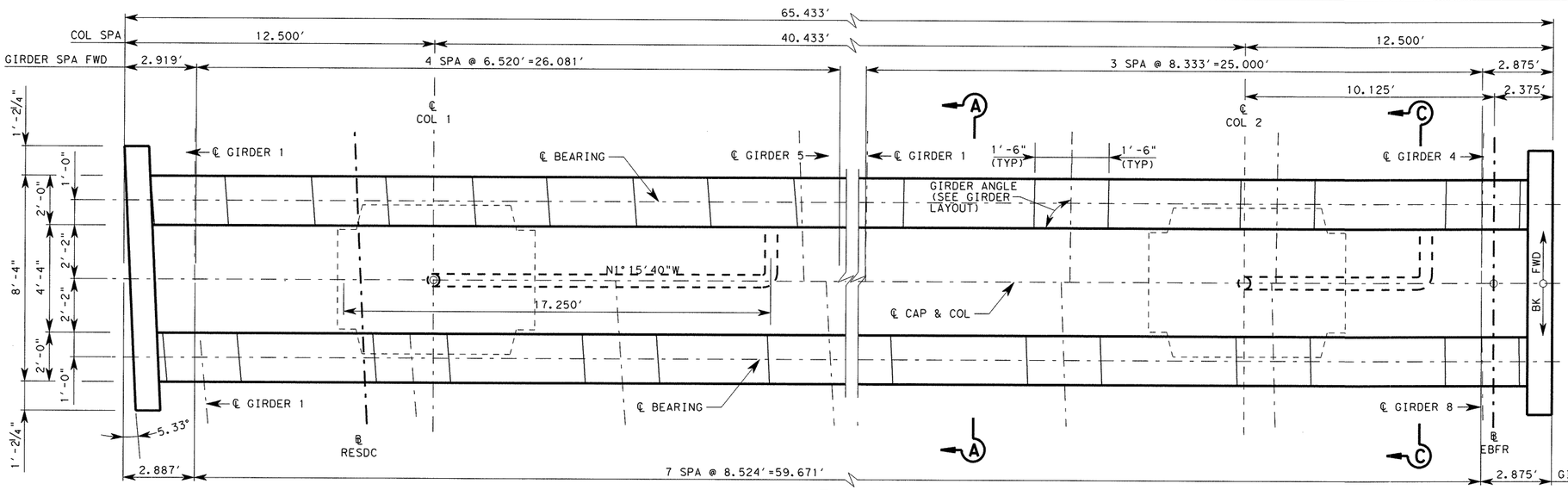

PLAN

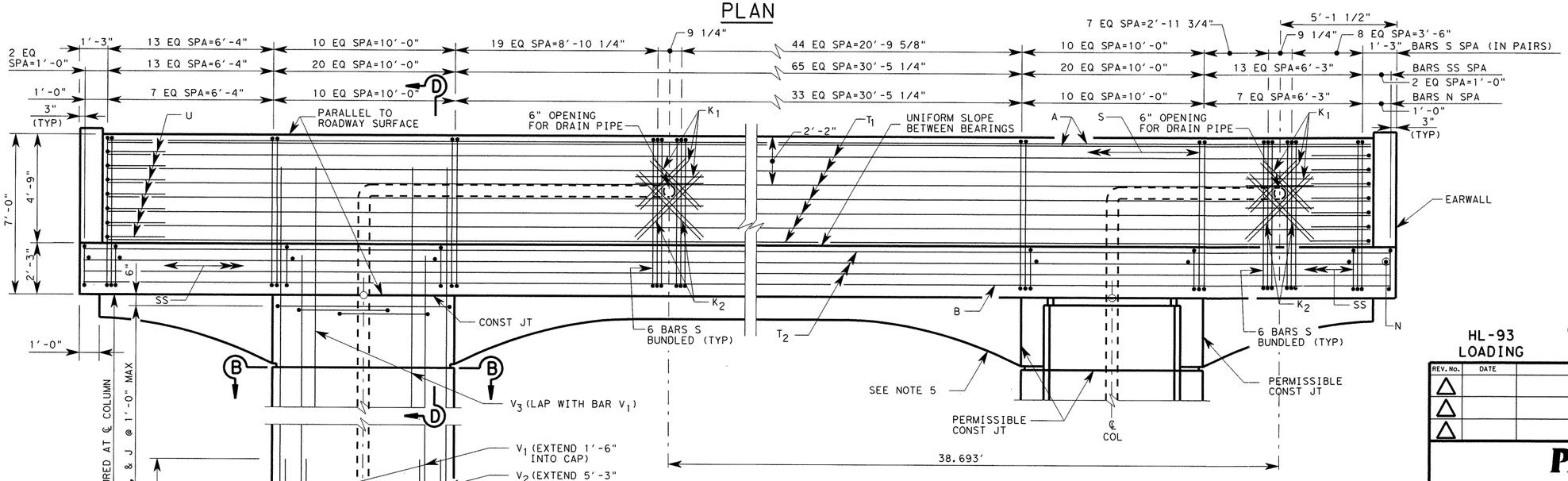

ELEVATION

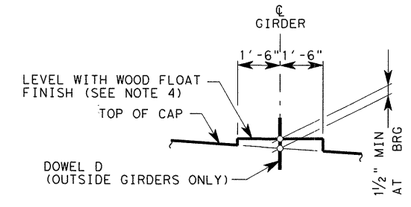

BEARING SEAT ELEVATION

BEARING SURFACE MUST BE CLEAN AND FREE OF ALL LOOSE MATERIAL BEFORE PLACING BEARING PAD

GENERAL NOTES:

1. DESIGNED ACCORDING TO AASHTO LRFD BRIDGE SPECIFICATIONS, 4TH EDITION 2007 AND 2009 CURRENT INTERIM'S FOR HL-93 LOADING.
2. CONCRETE STRENGTH F'C=3600 PSI.
3. ALL REINFORCING SHALL BE GRADE 60.
4. BEARING SURFACE SHALL BE CLEAN AND FREE OF ALL LOOSE MATERIAL BEFORE PLACING BEARING PAD.
5. SEE "AESTHETIC TREATMENT REINFORCEMENT DETAILS" SHEET FOR ARCH REINFORCEMENT AND AESTHETIC REVEAL DETAIL.
6. SEE "DRAIN DETAILS" SHEET FOR DETAILS AND DIMENSIONS NOT SHOWN.

* ADJUST BARS S, SS, AND N SPACING TO CLEAR DRAIN PIPE AS NEEDED.

HL-93 LOADING

STATE OF TEXAS
OSAMA A. SHAHAWY
88476
LICENSED PROFESSIONAL ENGINEER
4/11/11

REV. No.	DATE	REVISION	BY
△			
△			
△			

PBSJ an Atkins company TBPE REG. # F-474

Texas Department of Transportation
Austin District
©2011 by TxDOT

SH 45 / O'CONNOR DRIVE EB FRONTAGE RD BENT 5

SCALE: NTS

SHEET 7 OF 16

DESIGNED: RBR	FED. RD DIV. No.	STATE	PROJECT No.			HIGHWAY No.
CHECKED: OAS	6	TEXAS				LP 1/SH 45
DRAWN: RBR	STATE DISTRICT	COUNTY	CONTROL No.	SECTION No.	JOB No.	SHEET No.
CHECKED: OAS	AUSTIN	WILLIAMSON	0683	06	027	355

PLOT DRIVER: RD*11x17*PDF.plt
PEN TABLE: xd_rd_pen.tbl
FILE: o'connor\cadd\bdg\EBFR\0045BTebfr07.dgn
TIME: 10:35:15 AM
DATE: 4/11/2011

① TABLE OF VARIABLES COLUMN QUANTITIES

COL	COLUMN HEIGHT "H"	BARS V_1 #11 NO.	BARS V_1 #11 LENGTH	BARS V_1 #11 WEIGHT (LB)	BARS V_2 #11 NO.	BARS V_2 #11 LENGTH	BARS V_2 #11 WEIGHT (LB)	BARS V_3 #8 NO.	BARS V_3 #8 LENGTH	BARS V_3 #8 WEIGHT (LB)	BARS Z_1 #5 21'-2" NO.	BARS Z_1 WEIGHT (LB)	BARS Z_2 #5 26'-2" NO.	BARS Z_2 WEIGHT (LB)	BARS J #4 10'-5" NO.	BARS J WEIGHT (LB)	TOTAL ESTIMATED ② QUANTITIES PER COLUMN: REINF STEEL * LB	TOTAL ESTIMATED ② QUANTITIES PER COLUMN: CLASS "C" (MASS) CONC (BENT) CY
1	22	20	23'-6"	2497	28	27'-3"	4054	20	10'-6"	561	44	971	22	600	22	152	8835	61.52
2	22	20	23'-6"	2497	28	27'-3"	4054	20	10'-6"	561	44	971	22	600	22	152	8835	61.52

* FOR CONTRACTOR'S INFORMATION ONLY

① ADJUST BARS V_1, V_2, AND V_3 LENGTHS BY 1 FT, NUMBER OF BARS Z_2 AND J BY 1, AND NUMBER OF BARS Z_1 BY 2 FOR EACH 1 LF VARIATION IN "H" VALUE.

② ESTIMATED QUANTITIES ARE BASED ON HEIGHT SHOWN ON BRIDGE LAYOUT.

TABLE OF ETIMATED QUANTITIES (BENT CAP)

BAR	NO.	SIZE	LENGTH	WEIGHT
A	12	#11	70'-1"	4,469
B	18	#11	69'-10"	6,680
K1	16	#6	3'-0"	72
K2	8	#6	4'-0"	48
N	70	#6	7'-7"	797
P	48	#5	6'-1"	305
R	24	#4	12'-1"	194
S	234	#6	19'-3"	6,766
SS	135	#6	20'-6"	4,154
T1	14	#6	63'-11"	1,344
T2	8	#6	67'-3"	808
U	14	#6	9'-0"	189
REINFORCING STEEL *			LB	25,827
CLASS "C" (MASS) CONC (BENT)			CY	95.0

* FOR CONTRACTOR'S INFORMATION ONLY

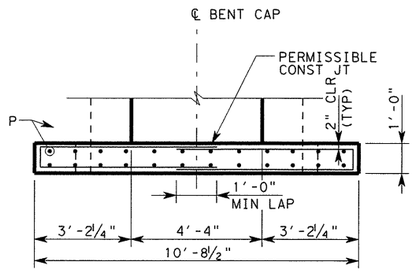

PLAN

* VARIES DEPENDING ON ROADWAY GRADE.

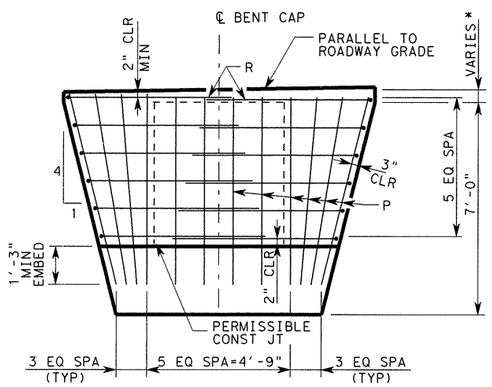

ELEVATION

EARWALL DETAIL

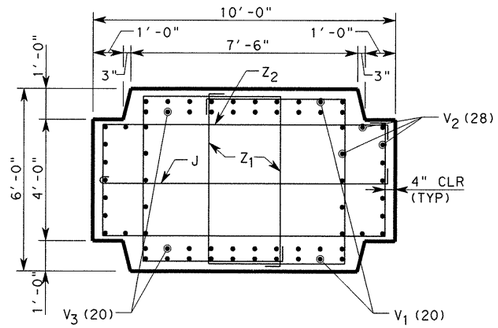

SECTION B-B

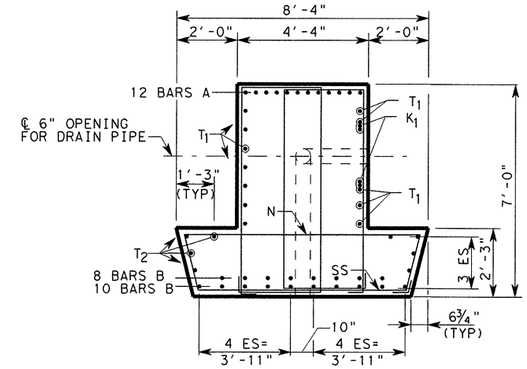

SECTION C-C

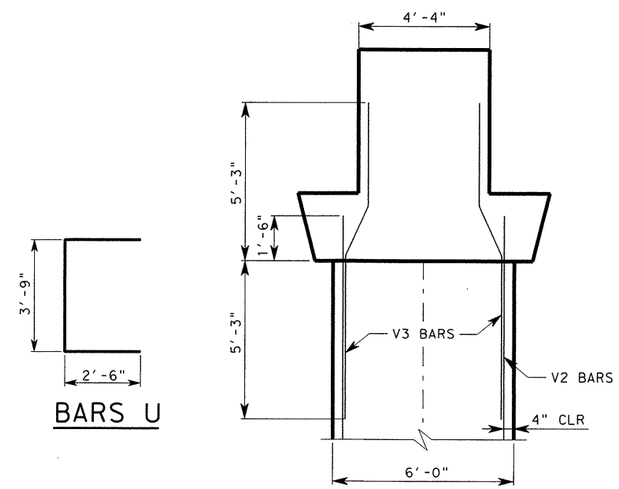

SECTION D-D

(CAP REINFORCEMENT NOT SHOWN FOR CLARITY)

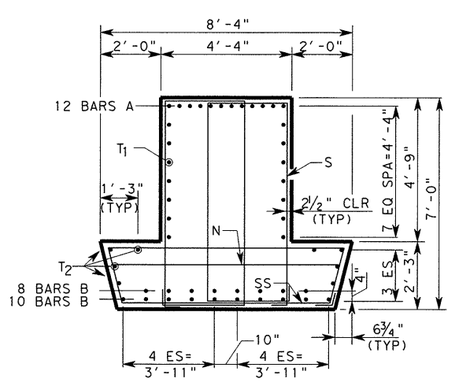

SECTION A-A

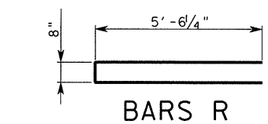

BARS R

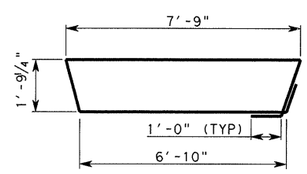

BARS SS

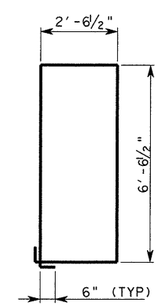

BARS S

BARS U

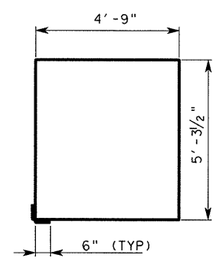

BARS Z_1

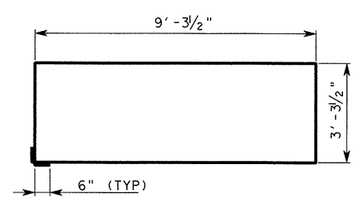

BARS Z_2

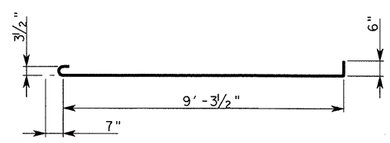

BARS J

Rev. 6/29/11

HL-93 LOADING

STATE OF TEXAS — OSAMA A. SHAHAWY — 88476 — LICENSED PROFESSIONAL ENGINEER — 6/7/11

REV. NO.	DATE	REVISION	BY
△			
△			
△			

PBSJ an Atkins company TBPE REG. # F-474

Texas Department of Transportation Austin District ©2011 by TxDOT

SH 45 / O'CONNOR DRIVE EB FRONTAGE RD BENT 5

SCALE: NTS — SHEET 8 OF 16

DESIGNED: RBR	FED. RD DIV. No.	STATE	PROJECT No.			HIGHWAY No.
CHECKED: OAS	6	TEXAS				LP 1/SH 45

DRAWN: RBR	STATE DISTRICT	COUNTY	CONTROL No.	SECTION No.	JOB No.	SHEET No.
CHECKED: OAS	AUSTIN	WILLIAMSON	0683	06	027	356

DATE: 6/2/2011 TIME: 1:40:19 PM
PLOT DRIVER: RD*11x17*PDF.plt
PEN TABLE: plotordr*ocon.tbl
FILE: r:\trans-design\o'connor\cadd\bdg\EBFR\OC45BTebfr08.dgn

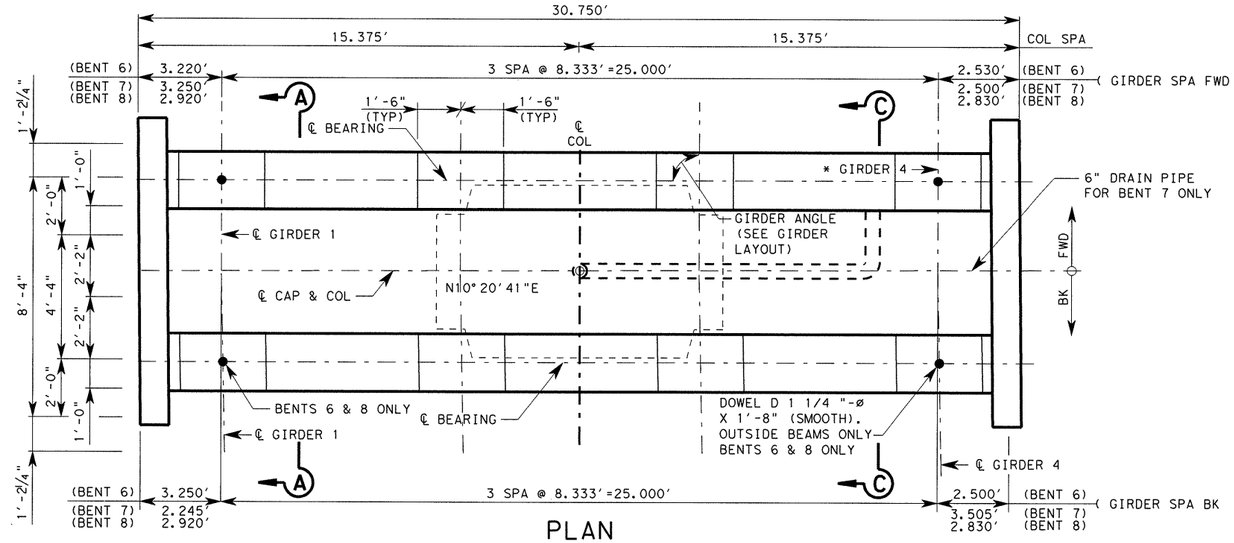

PLAN

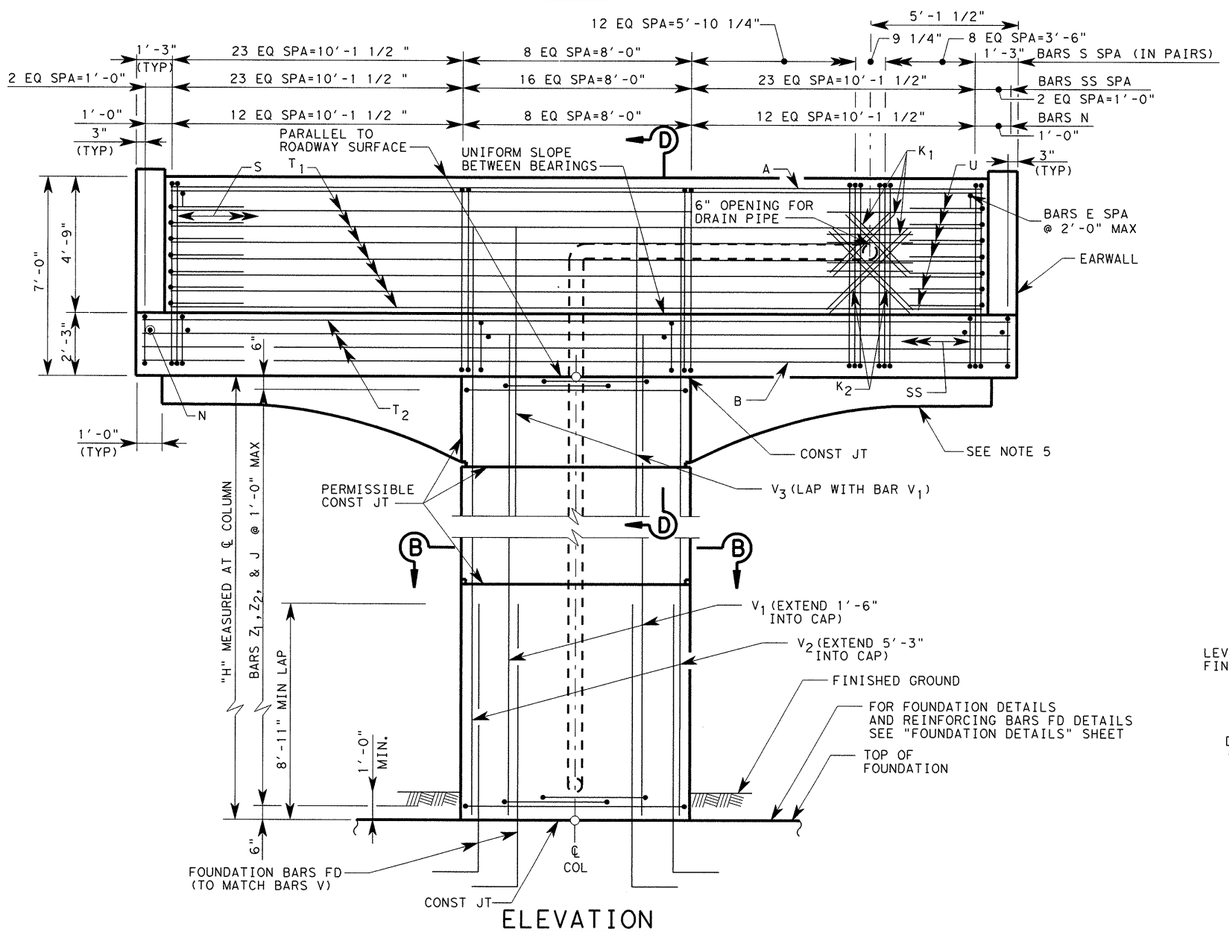

ELEVATION

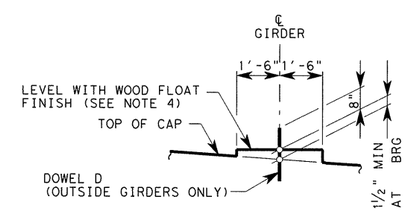

BEARING SEAT ELEVATION

BEARING SURFACE MUST BE CLEAN AND FREE OF ALL LOOSE MATERIAL BEFORE PLACING BEARING PAD

GENERAL NOTES:

1. DESIGNED ACCORDING TO AASHTO LRFD BRIDGE SPECIFICATIONS, 4TH EDITION 2007 AND 2009 CURRENT INTERIMS FOR HL-93 LOADING.
2. CONCRETE STRENGTH F'C=3600 PSI.
3. ALL REINFORCING SHALL BE GRADE 60.
4. BEARING SURFACE SHALL BE CLEAN AND FREE OF ALL LOOSE MATERIAL BEFORE PLACING BEARING PAD.
5. SEE "AESTHETIC TREATMENT REINFORCEMENT DETAILS" SHEET FOR ARCH REINFORCEMENT AND AESTHETIC REVEAL DETAIL.
6. SEE "DRAIN DETAILS" SHEET FOR DETAILS AND DIMENSIONS NOT SHOWN.

* ADJUST BARS S, SS, AND N SPACING TO CLEAR DRAIN PIPE AS NEEDED.

STATE OF TEXAS
OSAMA A. SHAHAWY
88476
LICENSED PROFESSIONAL ENGINEER
4/11/11

HL-93 LOADING

REV. No.	DATE	REVISION	BY
△			
△			
△			

PBSJ an Atkins company TBPE REG. # F-474

Texas Department of Transportation
Austin District
©2011 by TxDOT

SH 45 / O'CONNOR DRIVE EB FRONTAGE RD BENTS 6-8

SCALE: NTS — SHEET 9 OF 16

DESIGNED: KAV	FED. RD DIV. No.	STATE	PROJECT No.			HIGHWAY No.
CHECKED: DRB	6	TEXAS				LP 1/SH 45
DRAWN: CAB	STATE DISTRICT	COUNTY	CONTROL No.	SECTION No.	JOB No.	SHEET No.
CHECKED: DRB	AUSTIN	WILLIAMSON	0683	06	027	357

DATE: 4/11/2011 TIME: 10:35:18 AM
PLOT DRIVER: RD*11x17*PDF.plt
PEN TABLE: plotordr*ocon.tbl
FILE: r:\trans-design\o'connor\cadd\bdg\EBFR\OC45BTebfr09.dgn

① TABLE OF VARIABLES COLUMN QUANTITIES

COL	COLUMN HEIGHT "H"	BARS V_1 #11 NO.	BARS V_1 #11 LENGTH	BARS V_1 #11 WEIGHT (LB)	BARS V_2 #11 NO.	BARS V_2 #11 LENGTH	BARS V_2 #11 WEIGHT (LB)	BARS V_3 #8 NO.	BARS V_3 #8 LENGTH	BARS V_3 #8 WEIGHT (LB)	BARS Z_1 #5 19'-2" NO.	BARS Z_1 WEIGHT (LB)	BARS Z_2 #5 22'-2" NO.	BARS Z_2 WEIGHT (LB)	BARS J #4 8'-5" NO.	BARS J WEIGHT (LB)	② TOTAL ESTIMATED QUANTITIES PER COLUMN: REINF STEEL * LB	CLASS "C" (MASS) CONC (BENT) CY
6	26	16	27'-6"	2338	28	31'-3"	4649	16	10'-6"	449	52	1040	26	601	26	146	9223	45.2
7	28	16	29'-6"	2508	28	33'-3"	4946	16	10'-6"	449	56	1119	28	647	28	157	9826	40.3
8	25	16	26'-6"	2253	28	30'-3"	4500	16	10'-6"	449	50	1000	25	578	25	141	8921	35.4

* FOR CONTRACTOR'S INFORMATION ONLY

① ADJUST BARS V_1, V_2, AND V_3 LENGTHS BY 1 FT, NUMBER OF BARS Z J_1 AND J_2 BY 1, AND NUMBER OF BARS Z_1 BY 2 FOR EACH 1 LF VARIATION IN "H" VALUE.

② ESTIMATED QUANTITIES ARE BASED ON HEIGHT SHOWN ON BRIDGE LAYOUT.

TABLE OF ETIMATED QUANTITIES (BENT CAP 6 & 8)				
BAR	NO.	SIZE	LENGTH	WEIGHT
A	18	#11	28'-5"	2,718
B	10	#11	30'-5"	1,616
D	4	1 1/4 "DIA	1'-8"	29
E	16	#4	4'-11"	53
N	35	#6	7'-7"	399
P	48	#5	6'-1"	305
R	24	#4	12'-1"	194
S	112	#6	19'-3"	3,238
SS	65	#6	20'-6"	2,000
T1	14	#6	27'-1"	570
T2	8	#6	30'-5"	365
U	14	#6	9'-0"	189
REINFORCING STEEL *			LB	11,675
CLASS "C" (MASS) CONC (BENT)			CY	45.9

* FOR CONTRACTOR'S INFORMATION ONLY

TABLE OF ETIMATED QUANTITIES (BENT CAP 7)				
BAR	NO.	SIZE	LENGTH	WEIGHT
A	18	#11	28'-5"	2,718
B	10	#11	30'-5"	1,616
E	16	#4	4'-11"	53
K1	8	#6	3'-0"	36
K2	4	#6	4'-0"	24
N	35	#6	7'-7"	399
P	48	#5	6'-1"	305
R	24	#4	12'-1"	194
S	108	#6	19'-3"	3,123
SS	65	#6	20'-6"	2,000
T1	14	#6	27'-1"	570
T2	8	#6	30'-5"	365
U	14	#6	9'-0"	189
REINFORCING STEEL *			LB	11,590
CLASS "C" (MASS) CONC (BENT)			CY	45.9

* FOR CONTRACTOR'S INFORMATION ONLY

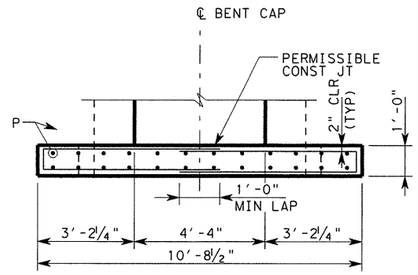

PLAN

* VARIES DEPENDING ON ROADWAY GRADE, 4" MIN AT ℄ BEARING ON LOW SIDE.

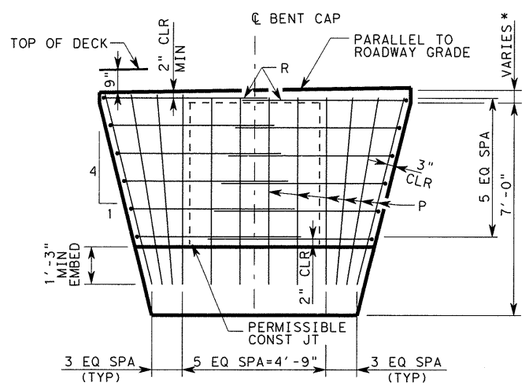

ELEVATION

EARWALL DETAIL

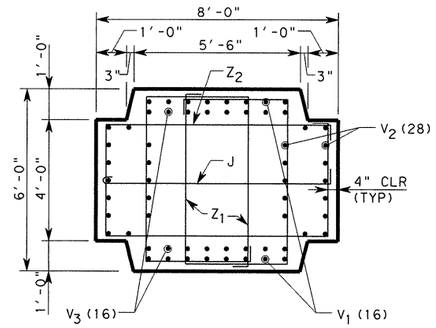

SECTION B-B

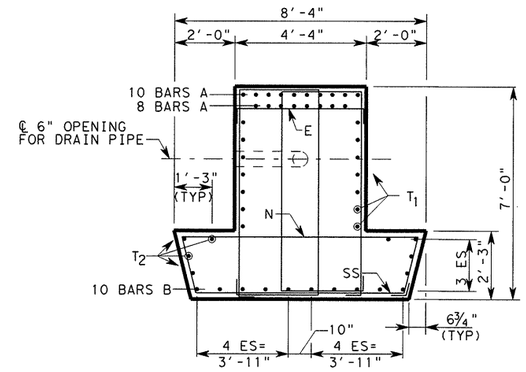

SECTION C-C

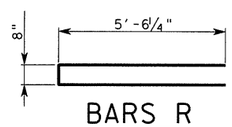

BARS R

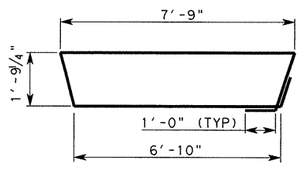

BARS SS

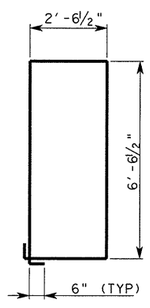

BARS S

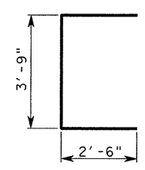

BARS U

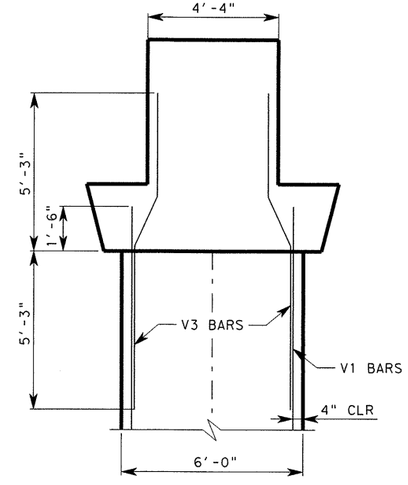

SECTION D-D

(CAP REINFORCEMENT NOT SHOWN FOR CLARITY)

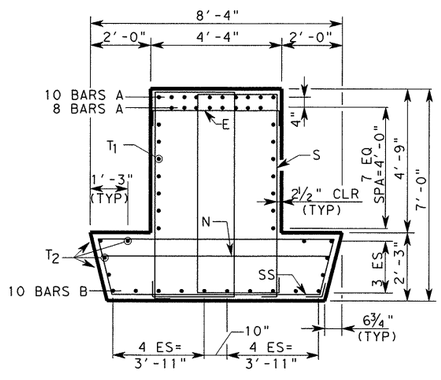

SECTION A-A

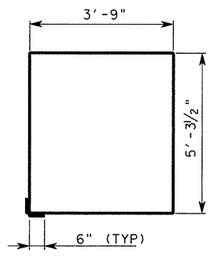

BARS Z1

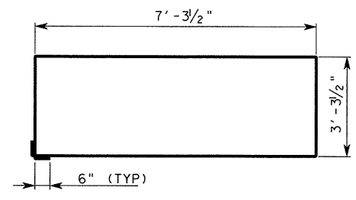

BARS Z2

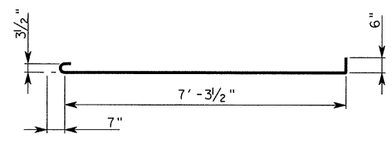

BARS J

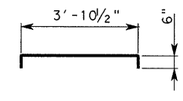

BARS E

Rev. 6/29/11

HL-93 LOADING

STATE OF TEXAS
OSAMA A. SHAHAWY
88476
LICENSED PROFESSIONAL ENGINEER
6/7/11

REV. No.	DATE	REVISION	BY
△			
△			
△			

PBSJ an Atkins company TBPE REG. # F-474

Texas Department of Transportation Austin District

©2011 by TxDOT

SH 45 / O'CONNOR DRIVE EB FRONTAGE RD BENTS 6-8

SCALE: NTS SHEET 10 OF 16

DESIGNED: KAV	FED. RD DIV. No.	STATE	PROJECT No.			HIGHWAY No.	
CHECKED: DRB	6	TEXAS				LP 1/SH 45	
DRAWN: CAB	STATE DISTRICT	COUNTY	CONTROL No.	SECTION No.	JOB No.	SHEET No.	
CHECKED: DRB	AUSTIN	WILLIAMSON	0683	06	027	358	

PLOT DRIVER: RD*11x17*PDF.plt
PEN TABLE: plotordr*ocon.tbl
FILE: r:\trans-design\o'connor\cadd\bdg\EBFR\0C45BTebfr10.dgn
DATE: 6/2/2011 TIME: 1:40:21 PM

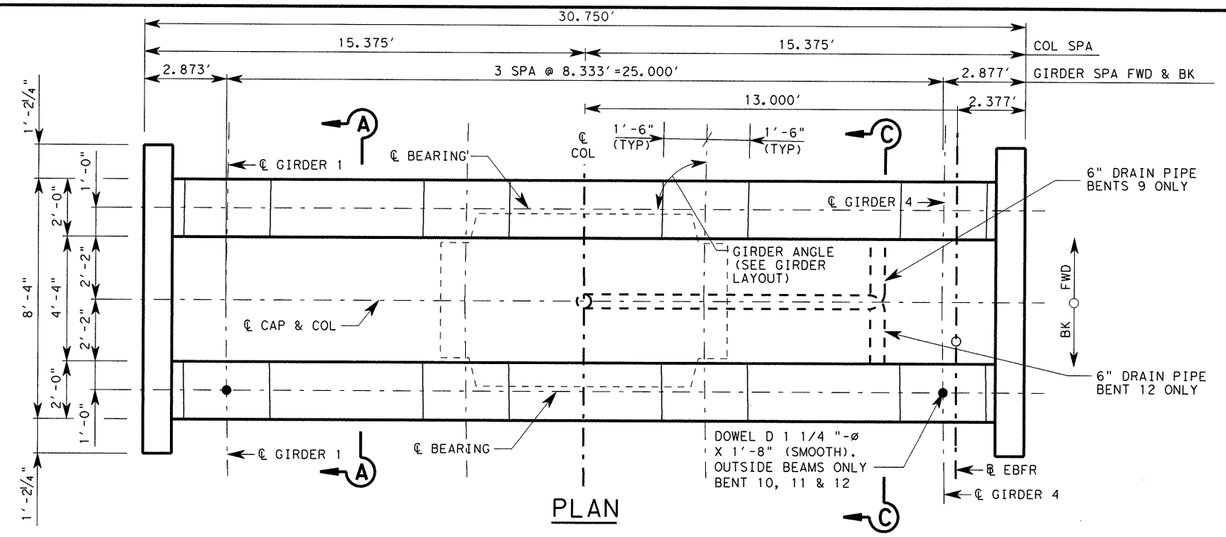

PLAN

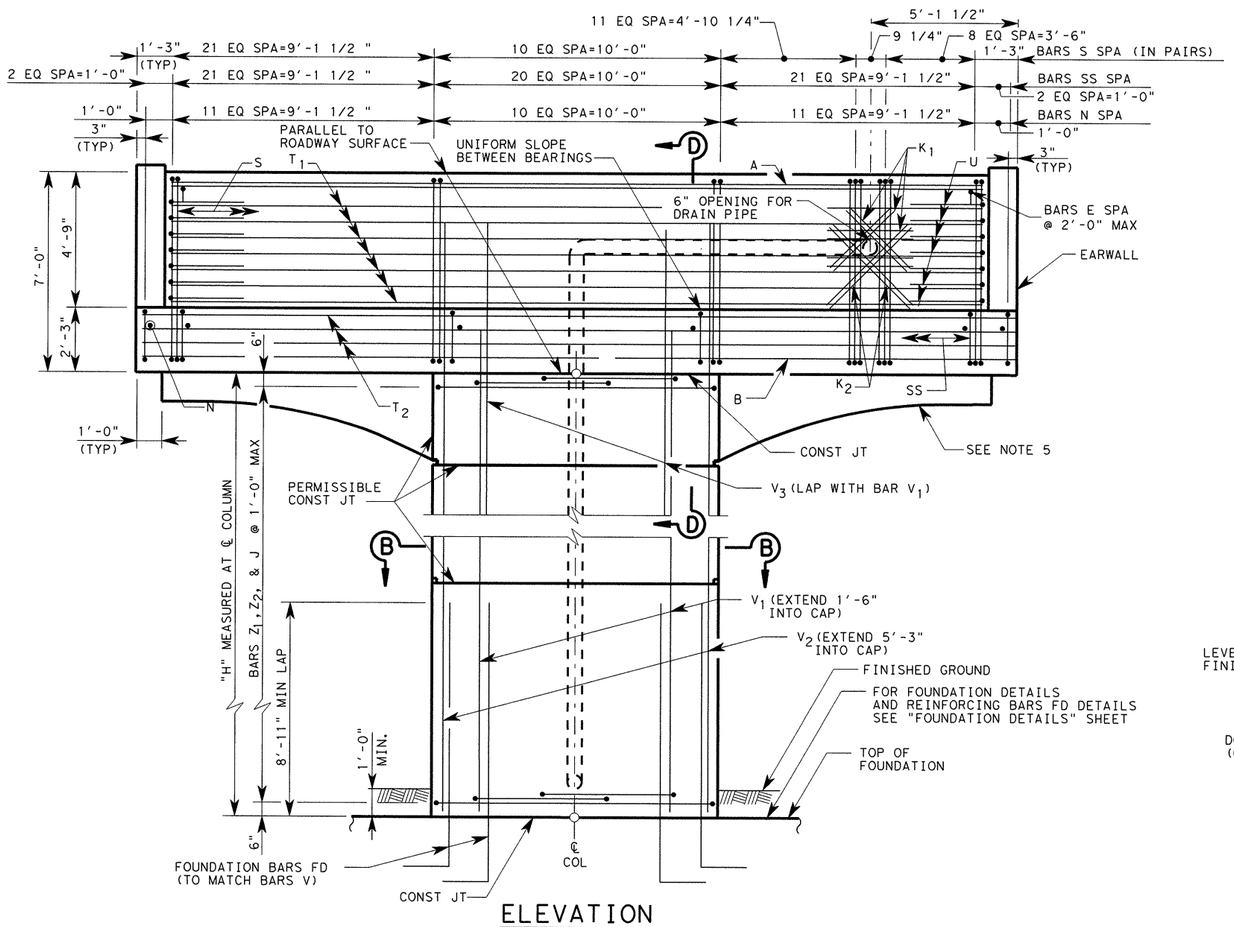

ELEVATION

GENERAL NOTES:

1. DESIGNED ACCORDING TO AASHTO LRFD BRIDGE SPECIFICATIONS, 4TH EDITION 2007 AND 2009 CURRENT INTERIMS FOR HL-93 LOADING.
2. CONCRETE STRENGTH F'C=3600 PSI.
3. ALL REINFORCING SHALL BE GRADE 60.
4. BEARING SURFACE SHALL BE CLEAN AND FREE OF ALL LOOSE MATERIAL BEFORE PLACING BEARING PAD.
5. SEE "AESTHETIC TREATMENT REINFORCEMENT DETAILS" SHEET FOR ARCH REINFORCEMENT AND AESTHETIC REVEAL DETAIL.
6. SEE "DRAIN DETAILS" SHEET FOR DETAILS AND DIMENSIONS NOT SHOWN.

* ADJUST BARS S, SS, AND N SPACING TO CLEAR DRAIN PIPE AS NEEDED.

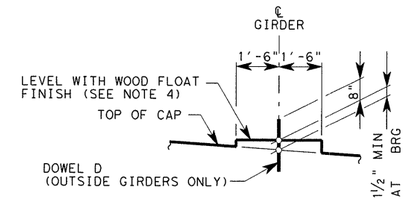

BEARING SEAT ELEVATION

BEARING SURFACE MUST BE CLEAN AND FREE OF ALL LOOSE MATERIAL BEFORE PLACING BEARING PAD

STATE OF TEXAS
OSAMA A. SHAHAWY
88476
LICENSED PROFESSIONAL ENGINEER
4/11/11

HL-93 LOADING

REV. No.	DATE	REVISION	BY
△			
△			
△			

PBSJ an Atkins company TBPE REG. # F-474

Texas Department of Transportation Austin District

©2011 by TxDOT

SH 45 / O'CONNOR DRIVE EB FRONTAGE RD BENTS 9-12

SCALE: NTS

SHEET 11 OF 16

DESIGNED: RBR	FED. RD DIV. No.	STATE	PROJECT No.			HIGHWAY No.	
CHECKED: OAS	6	TEXAS				LP 1/SH 45	
DRAWN: RBR	STATE DISTRICT	COUNTY	CONTROL No.	SECTION No.	JOB No.	SHEET No.	
CHECKED: OAS	AUSTIN	WILLIAMSON	0683	06	027	359	

PLOT DRIVER: RD*11x17*PDF.plt
PEN TABLE: plotordr*ocon.tbl
FILE: r:\trans-design\o'connor\cadd\bdg\EBFR\0C45BTebfr11.dgn
DATE: 4/11/2011 TIME: 10:35:21 AM

① TABLE OF VARIABLES COLUMN QUANTITIES

COL	COLUMN HEIGHT "H"	BARS V_1 #11			BARS V_2 #11			BARS V_3 #8			BARS Z_1 #5 21'-2"		BARS Z_2 #5 26'-2"		BARS J #4 10'-5"		② TOTAL ESTIMATED QUANTITIES PER COLUMN	
		NO.	LENGTH	WEIGHT (LB)	NO.	LENGTH	WEIGHT (LB)	NO.	LENGTH	WEIGHT (LB)	NO.	WEIGHT (LB)	NO.	WEIGHT (LB)	NO.	WEIGHT (LB)	REINF STEEL * LB	CLASS "C" (MASS) CONC (BENT) CY
9	22	20	23'-6"	2497	28	27'-3"	4054	20	10'-6"	561	44	971	22	600	22	152	8835	45.2
10	21	20	22'-6"	2391	28	26'-3"	3905	20	10'-6"	561	42	927	21	573	21	146	8503	43.2
11	17	20	18'-6"	1966	28	22'-3"	3310	20	10'-6"	561	34	751	17	464	17	118	7170	34.9
12	13	20	14'-6"	1541	28	18'-3"	2715	20	10'-6"	561	26	574	13	355	13	90	5836	26.7

* FOR CONTRACTOR'S INFORMATION ONLY

① ADJUST BARS V_1, V_2, AND V_3 LENGTHS BY 1 FT, NUMBER OF BARS Z J_1 AND J_2 BY 1, AND NUMBER OF BARS Z_1 BY 2 FOR EACH 1 LF VARIATION IN "H" VALUE.

② ESTIMATED QUANTITIES ARE BASED ON HEIGHT SHOWN ON BRIDGE LAYOUT.

TABLE OF ETIMATED QUANTITIES (BENT CAP 9 & 12)

BAR	NO.	SIZE	LENGTH	WEIGHT
A	18	#11	28'-5"	2,718
B	10	#11	30'-5"	1,616
D	2	1 1/4 "DIA	1'-8"	14
E	16	#4	4'-11"	53
K1	8	#6	3'-0"	36
K2	4	#6	4'-0"	24
N	35	#6	7'-7"	399
P	48	#5	6'-1"	305
R	24	#4	12'-1"	194
S	108	#6	19'-3"	3,123
SS	65	#6	20'-6"	2,000
T1	14	#6	27'-1"	570
T2	8	#6	30'-5"	365
U	14	#6	9'-0"	189
REINFORCING STEEL *			LB	11,605
CLASS "C" (MASS) CONC (BENT)			CY	45.9

* FOR CONTRACTOR'S INFORMATION ONLY

TABLE OF ETIMATED QUANTITIES (BENT CAP 10 & 11)

BAR	NO.	SIZE	LENGTH	WEIGHT
A	18	#11	28'-5"	2,718
B	10	#11	30'-5"	1,616
D	2	1 1/4 "DIA	1'-8"	14
E	16	#4	4'-11"	53
N	65	#6	7'-7"	740
P	48	#5	6'-1"	305
R	24	#4	12'-1"	194
S	104	#6	19'-3"	3,007
SS	65	#6	20'-6"	2,000
T1	14	#6	27'-1"	570
T2	8	#6	30'-5"	365
U	14	#6	9'-0"	189
REINFORCING STEEL *			LB	11,771
CLASS "C" (MASS) CONC (BENT)			CY	45.9

* FOR CONTRACTOR'S INFORMATION ONLY

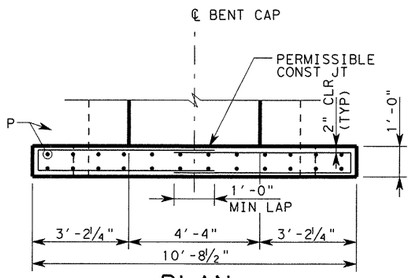

PLAN

* VARIES DEPENDING ON ROADWAY GRADE.

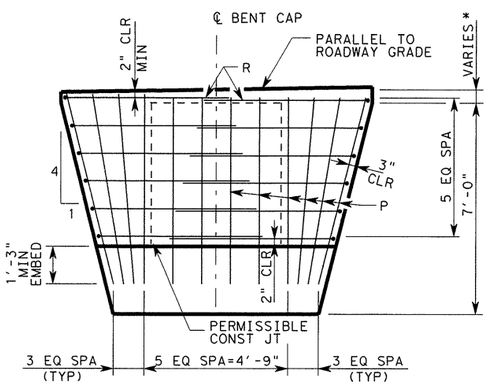

ELEVATION

EARWALL DETAIL

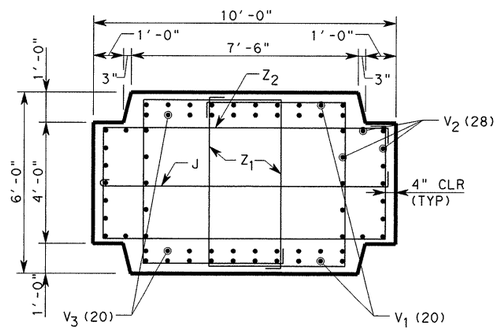

SECTION B-B

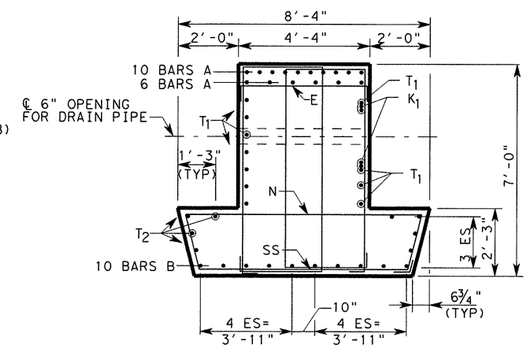

SECTION C-C

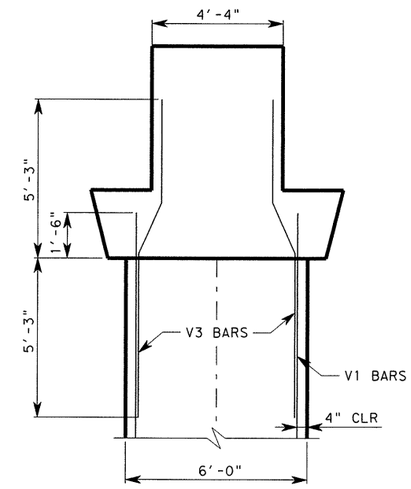

SECTION D-D

(CAP REINFORCEMENT NOT SHOWN FOR CLARITY)

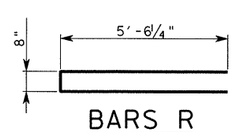

BARS R

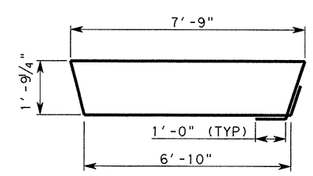

BARS SS

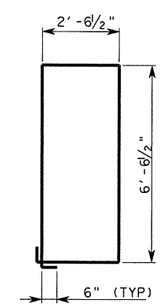

BARS S

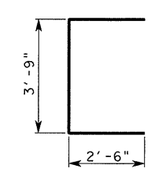

BARS U

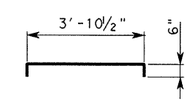

BARS E

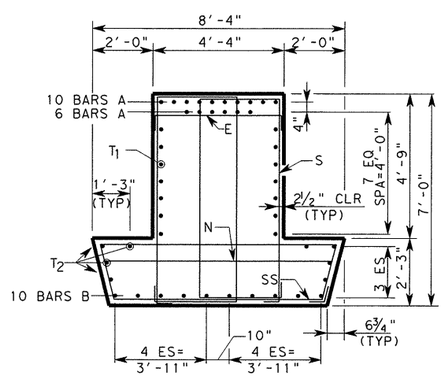

SECTION A-A

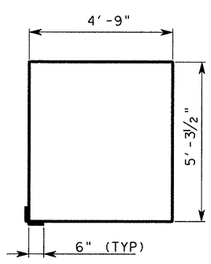

BARS Z1

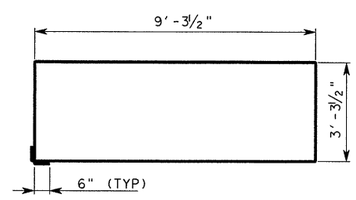

BARS Z2

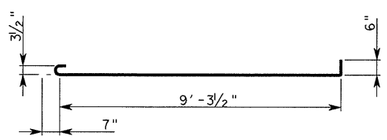

BARS J

HL-93 LOADING

STATE OF TEXAS
OSAMA A. SHAHAWY
88476
LICENSED PROFESSIONAL ENGINEER
6/7/11

REV. No.	DATE	REVISION	BY
△			
△			
△			

PBSJ an Atkins company TBPE REG. # F-474

Texas Department of Transportation Austin District

©2011 by TxDOT

SH 45 / O'CONNOR DRIVE EB FRONTAGE RD BENTS 9-12

SCALE: NTS

SHEET 12 OF 16

DESIGNED: RBR	FED. RD DIV. No.	STATE	PROJECT No.	HIGHWAY No.
CHECKED: OAS	6	TEXAS		LP 1/SH 45

DRAWN: RBR	STATE DISTRICT	COUNTY	CONTROL No.	SECTION No.	JOB No.	SHEET No.
CHECKED: OAS	AUSTIN	WILLIAMSON	0683	06	027	360

Rev. 6/29/11

PLOT DRIVER: RD*11x17*PDF.plt
PEN TABLE: plotordr*ocon.tbl
FILE: r:\trans-design\o'connor\cadd\bdg\EBFR\0C45BTebfr12.dgn
DATE: 6/2/2011
TIME: 1:40:23 PM

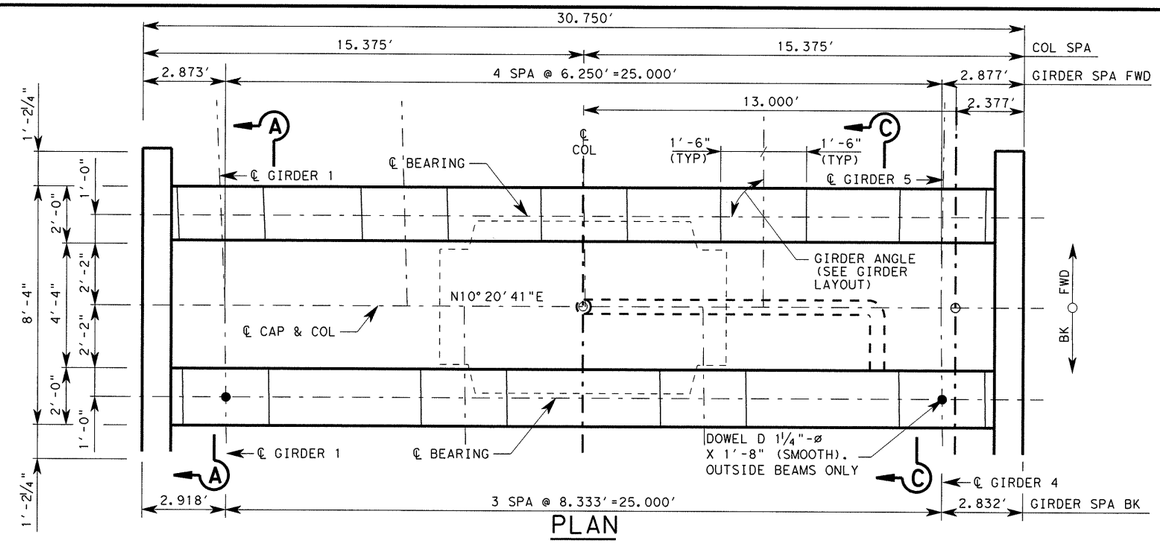

PLAN

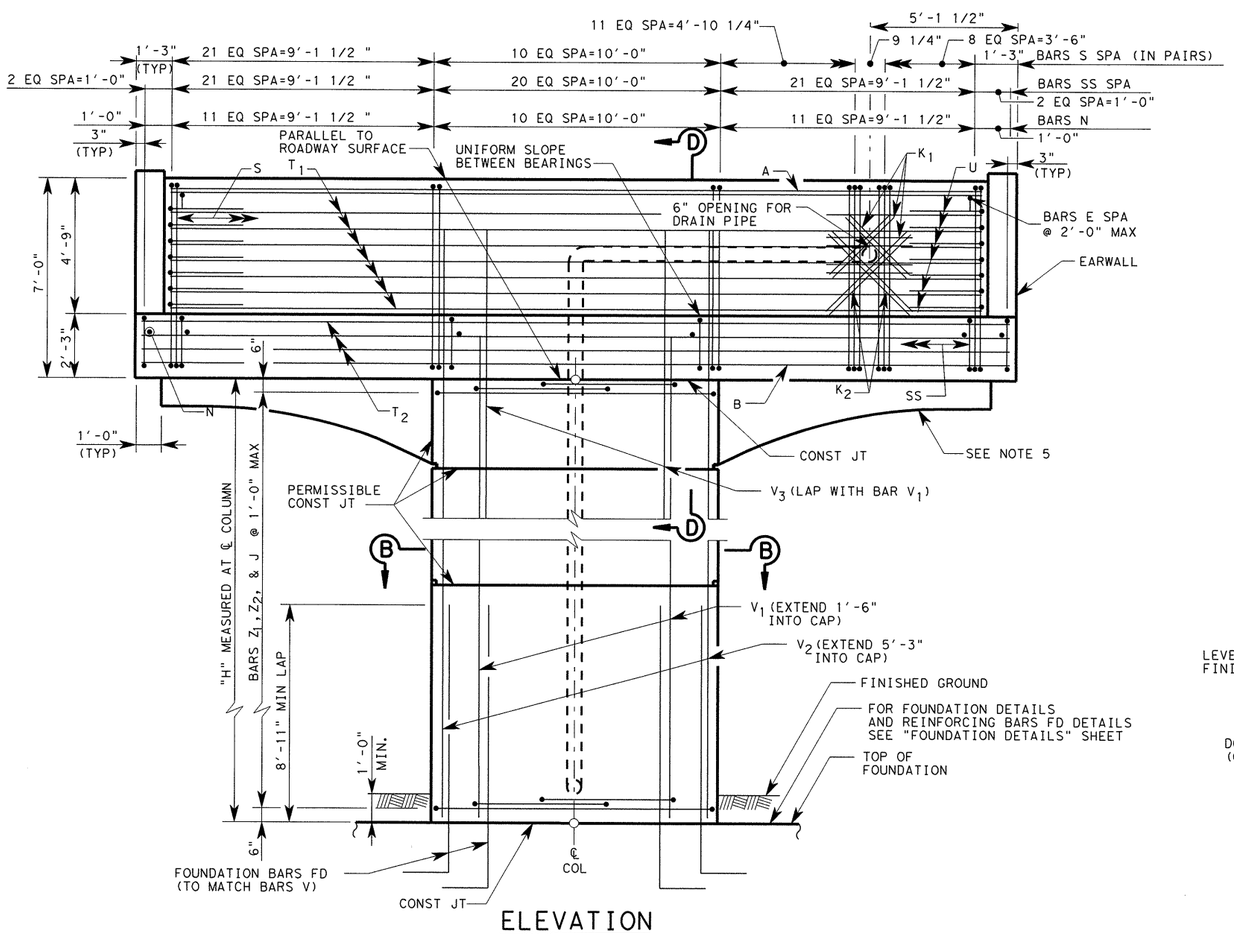

ELEVATION

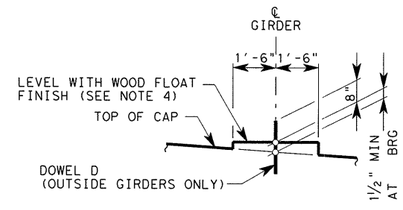

BEARING SEAT ELEVATION

BEARING SURFACE MUST BE CLEAN AND FREE OF ALL LOOSE MATERIAL BEFORE PLACING BEARING PAD

GENERAL NOTES:

1. DESIGNED ACCORDING TO AASHTO LRFD BRIDGE SPECIFICATIONS, 4TH EDITION 2007 AND 2009 CURRENT INTERIMS FOR HL-93 LOADING.
2. CONCRETE STRENGTH F'C=3600 PSI.
3. ALL REINFORCING SHALL BE GRADE 60.
4. BEARING SURFACE SHALL BE CLEAN AND FREE OF ALL LOOSE MATERIAL BEFORE PLACING BEARING PAD.
5. SEE "AESTHETIC TREATMENT REINFORCEMENT DETAILS" SHEET FOR ARCH REINFORCEMENT AND AESTHETIC REVEAL DETAIL.
6. SEE "DRAIN DETAILS" SHEET FOR DETAILS AND DIMENSIONS NOT SHOWN.

* ADJUST BARS S, SS, AND N SPACING TO CLEAR DRAIN PIPE AS NEEDED.

HL-93 LOADING

STATE OF TEXAS
OSAMA A. SHAHAWY
88476
LICENSED
PROFESSIONAL ENGINEER
4/11/11

REV. NO.	DATE	REVISION	BY
△			
△			
△			

PBSJ an Atkins company TBPE REG. # F-474

Texas Department of Transportation
Austin District
©2011 by TxDOT

SH 45 / O'CONNOR DRIVE EB FRONTAGE RD BENT 13

SCALE: NTS — SHEET 13 OF 16

DESIGNED: RBR	FED. RD DIV. No.	STATE	PROJECT No.			HIGHWAY No.
CHECKED: OAS	6	TEXAS				LP 1/SH 45
DRAWN: RBR	STATE DISTRICT	COUNTY	CONTROL No.	SECTION No.	JOB No.	SHEET No.
CHECKED: OAS	AUSTIN	WILLIAMSON	0683	06	027	361

DATE: 4/11/2011 TIME: 10:35:25 AM
PLOT DRIVER: RD*11x17*PDF.plt
PEN TABLE: plotordr*ocon.tbl
FILE: r:\trans-design\o'connor\cadd\bdg\EBFR\0C45BTebfr13.dgn

① TABLE OF VARIABLES COLUMN QUANTITIES

COL	COLUMN HEIGHT "H"	BARS V_1 #11 NO.	BARS V_1 #11 LENGTH	BARS V_1 #11 WEIGHT (LB)	BARS V_2 #11 NO.	BARS V_2 #11 LENGTH	BARS V_2 #11 WEIGHT (LB)	BARS V_3 #8 NO.	BARS V_3 #8 LENGTH	BARS V_3 #8 WEIGHT (LB)	BARS Z_1 #5 21'-2" NO.	BARS Z_1 WEIGHT (LB)	BARS Z_2 #5 26'-2" NO.	BARS Z_2 WEIGHT (LB)	BARS J #4 10'-5" NO.	BARS J WEIGHT (LB)	TOTAL ESTIMATED ② QUANTITIES PER COLUMN: REINF STEEL * LB	TOTAL ESTIMATED ② QUANTITIES PER COLUMN: CLASS "C" (MASS) CONC (BENT) CY
13	9	20	10'-6"	1116	28	14'-3"	2120	20	10'-6"	561	18	397	9	246	9	62	4502	18.5

* FOR CONTRACTOR'S INFORMATION ONLY

① ADJUST BARS V_1, V_2, AND V_3 LENGTHS BY 1 FT, NUMBER OF BARS Z J_1 AND J_2 BY 1, AND NUMBER OF BARS Z_1 BY 2 FOR EACH 1 LF VARIATION IN "H" VALUE.

② ESTIMATED QUANTITIES ARE BASED ON HEIGHT SHOWN ON BRIDGE LAYOUT.

TABLE OF ETIMATED QUANTITIES (BENT CAP)

BAR	NO.	SIZE	LENGTH	WEIGHT
A	18	#11	28'-5"	2,718
B	10	#11	30'-5"	1,616
D	2	1 1/4 "DIA	1'-8"	14
E	16	#4	4'-11"	53
K1	8	#6	3'-0"	36
K2	4	#6	4'-0"	24
N	35	#6	7'-7"	399
P	48	#5	6'-1"	305
R	24	#4	12'-1"	194
S	108	#6	19'-3"	3,123
SS	65	#6	20'-6"	2,000
T1	14	#6	27'-1"	570
T2	8	#6	30'-5"	365
U	14	#6	9'-0"	189
REINFORCING STEEL *			LB	11,605
CLASS "C" (MASS) CONC (BENT)			CY	45.9

* FOR CONTRACTOR'S INFORMATION ONLY

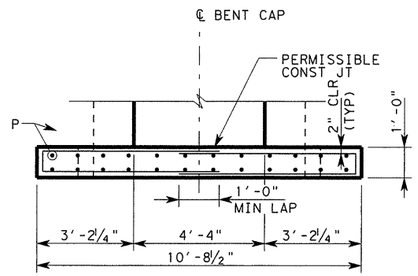

PLAN

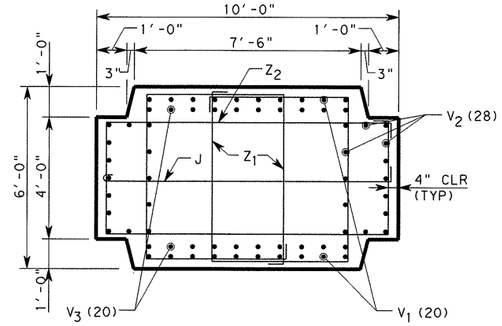

SECTION B-B

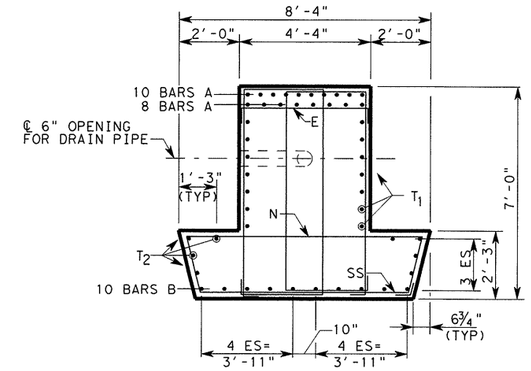

SECTION C-C

* VARIES DEPENDING ON ROADWAY GRADE.

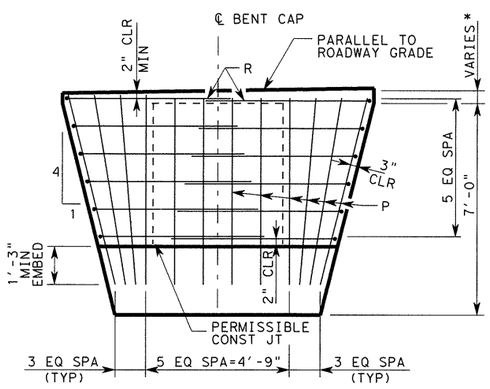

ELEVATION

EARWALL DETAIL

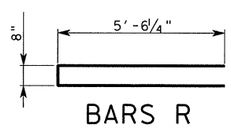

BARS R

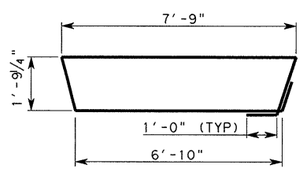

BARS SS

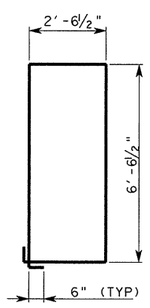

BARS S

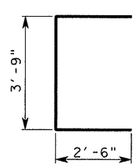

BARS U

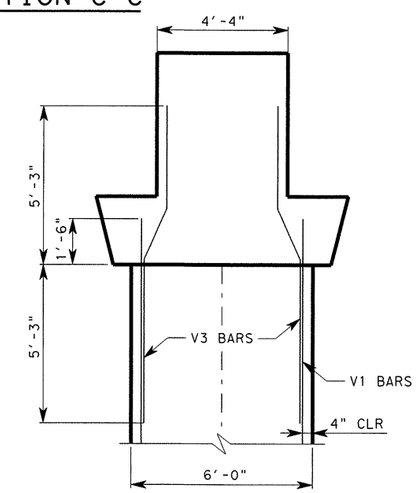

SECTION D-D

(CAP REINFORCEMENT NOT SHOWN FOR CLARITY)

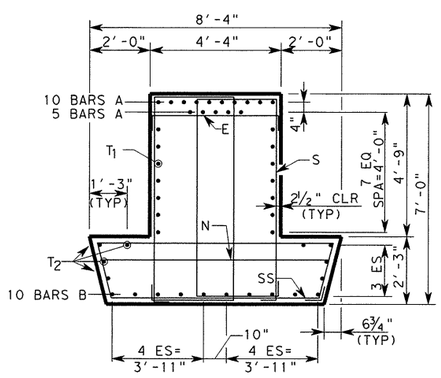

SECTION A-A

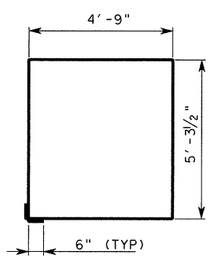

BARS Z1

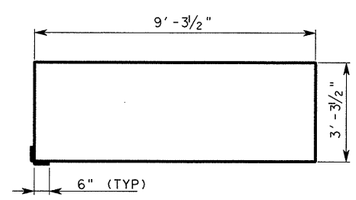

BARS Z2

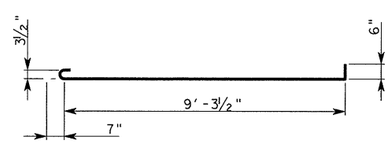

BARS J

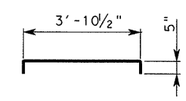

BARS E

Rev. 6/29/11

HL-93 LOADING

STATE OF TEXAS — OSAMA A. SHAHAWY — 88476 — LICENSED PROFESSIONAL ENGINEER — 6/17/11

REV. No.	DATE	REVISION	BY
△			
△			
△			

PBSJ an Atkins company TBPE REG. # F-474

Texas Department of Transportation Austin District ©2011 by TxDOT

SH 45 / O'CONNOR DRIVE EB FRONTAGE RD BENT 13

SCALE: NTS — SHEET 14 OF 16

DESIGNED: RBR	FED. RD DIV. No.	STATE	PROJECT No.	HIGHWAY No.
CHECKED: OAS	6	TEXAS		LP 1/SH 45

DRAWN: RBR	STATE DISTRICT	COUNTY	CONTROL No.	SECTION No.	JOB No.	SHEET No.
CHECKED: OAS	AUSTIN	WILLIAMSON	0683	06	027	362

DATE: 6/2/2011 TIME: 1:40:25 PM

PLOT DRIVER: RD*11x17*PDF.plt
PEN TABLE: plotordr*ocon.tbl
FILE: r:\trans-design\o'connor\cadd\bdg\EBFR\0C45BTebfr14.dgn

① TABLE OF VARIABLES COLUMN QUANTITIES											TOTAL ESTIMATED ② QUANTITIES PER COLUMN	
COL	COLUMN HEIGHT "H"	BARS V #8			BARS Z_1 #5 21'-2"		BARS Z_2 #5 26'-2"		BARS J #4 10'-5"		REINF STEEL *	CLASS "C" (MASS) CONC (BENT)
		NO.	LENGTH	WEIGHT (LB)	NO.	WEIGHT (LB)	NO.	WEIGHT (LB)	NO.	WEIGHT (LB)	LB	CY
14	6	20	10'-6"	561	12	265	6	164	6	42	1032	12.4

* FOR CONTRACTOR'S INFORMATION ONLY

① ADJUST BARS V_1, V_2, AND V_3 LENGTHS BY 1 FT, NUMBER OF BARS Z J_1 AND J_2 BY 1, AND NUMBER OF BARS Z_1 BY 2 FOR EACH 1 LF VARIATION IN "H" VALUE.

② ESTIMATED QUANTITIES ARE BASED ON HEIGHT SHOWN ON BRIDGE LAYOUT.

TABLE OF ETIMATED QUANTITIES (BENT CAP)				
BAR	NO.	SIZE	LENGTH	WEIGHT
A	22	#11	34'-5"	4,022
B	10	#11	36'-5"	1,934
D	4	1 1/4 "DIA	1'-8"	29
E	21	#4	4'-9"	66
K1	0	#6	3'-0"	0
K2	0	#6	4'-0"	0
N	41	#6	7'-7"	467
P	48	#5	6'-1"	305
R	24	#4	12'-1"	194
S	134	#6	19'-3"	3,874
SS	79	#6	20'-6"	2,431
T1	14	#6	33'-1"	696
T2	8	#6	36'-5"	438
U	14	#6	9'-0"	189
REINFORCING STEEL *			LB	14,644
CLASS "C" (MASS) CONC (BENT)			CY	54.4

* FOR CONTRACTOR'S INFORMATION ONLY

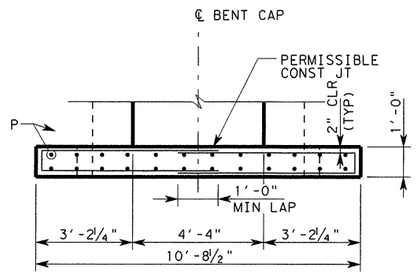

PLAN

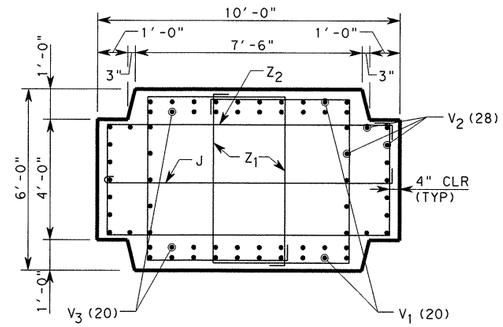

SECTION B-B

* VARIES DEPENDING ON ROADWAY GRADE.

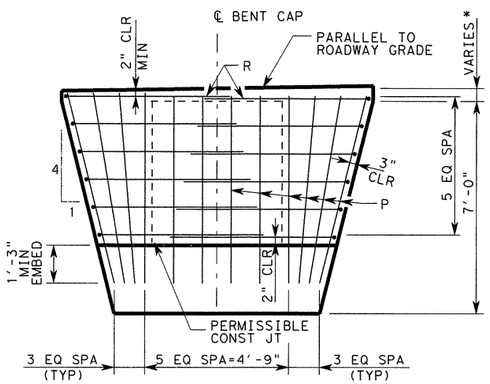

ELEVATION

EARWALL DETAIL

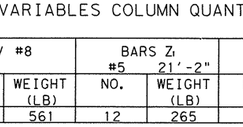

BARS R

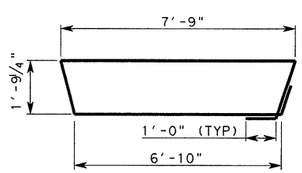

BARS SS

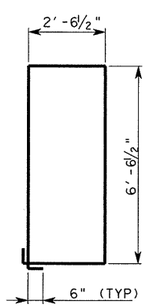

BARS S

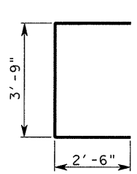

BARS U

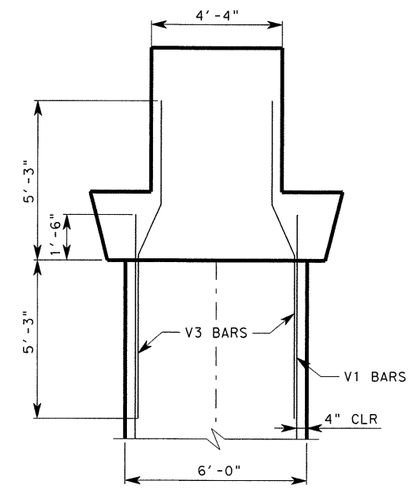

SECTION D-D

(CAP REINFORCEMENT NOT SHOWN FOR CLARITY)

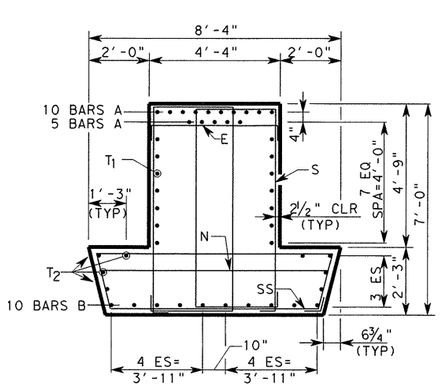

SECTION A-A

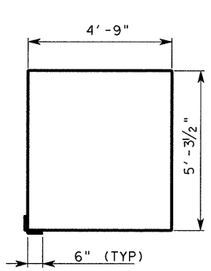

BARS Z_1

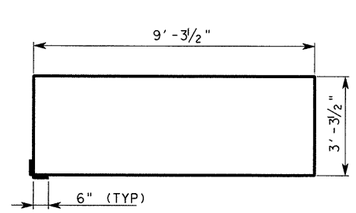

BARS Z_2

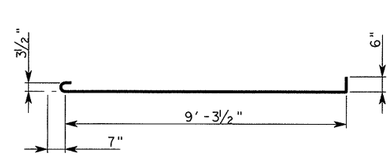

BARS J

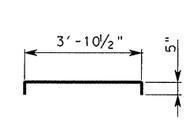

BARS E

Rev. 6/29/11

HL-93 LOADING

STATE OF TEXAS
OSAMA A. SHAHAWY
88476
LICENSED PROFESSIONAL ENGINEER
6/7/11

REV. No.	DATE	REVISION	BY
△			
△			
△			

PBSJ an Atkins company TBPE REG. # F-474

Texas Department of Transportation Austin District

©2011 by TxDOT

SH 45 / O'CONNOR DRIVE EB FRONTAGE RD BENT 14

SCALE: NTS SHEET 15 OF 16

DESIGNED: RBR	FED. RD DIV. No.	STATE	PROJECT No.			HIGHWAY No.	
CHECKED: OAS	6	TEXAS				LP 1/SH 45	
DRAWN: RBR	STATE DISTRICT	COUNTY	CONTROL No.	SECTION No.	JOB No.	SHEET No.	
CHECKED: OAS	AUSTIN	WILLIAMSON	0683	06	027	363	

PLOT DRIVER: RD*11x17*PDF.plt
PEN TABLE: plotordr*ocon.tbl
FILE: r:\trans-design\o'connor\CADD\BDG\EBFR\OC45BTebfr15.dgn
DATE: 6/2/2011 TIME: 1:40:27 PM

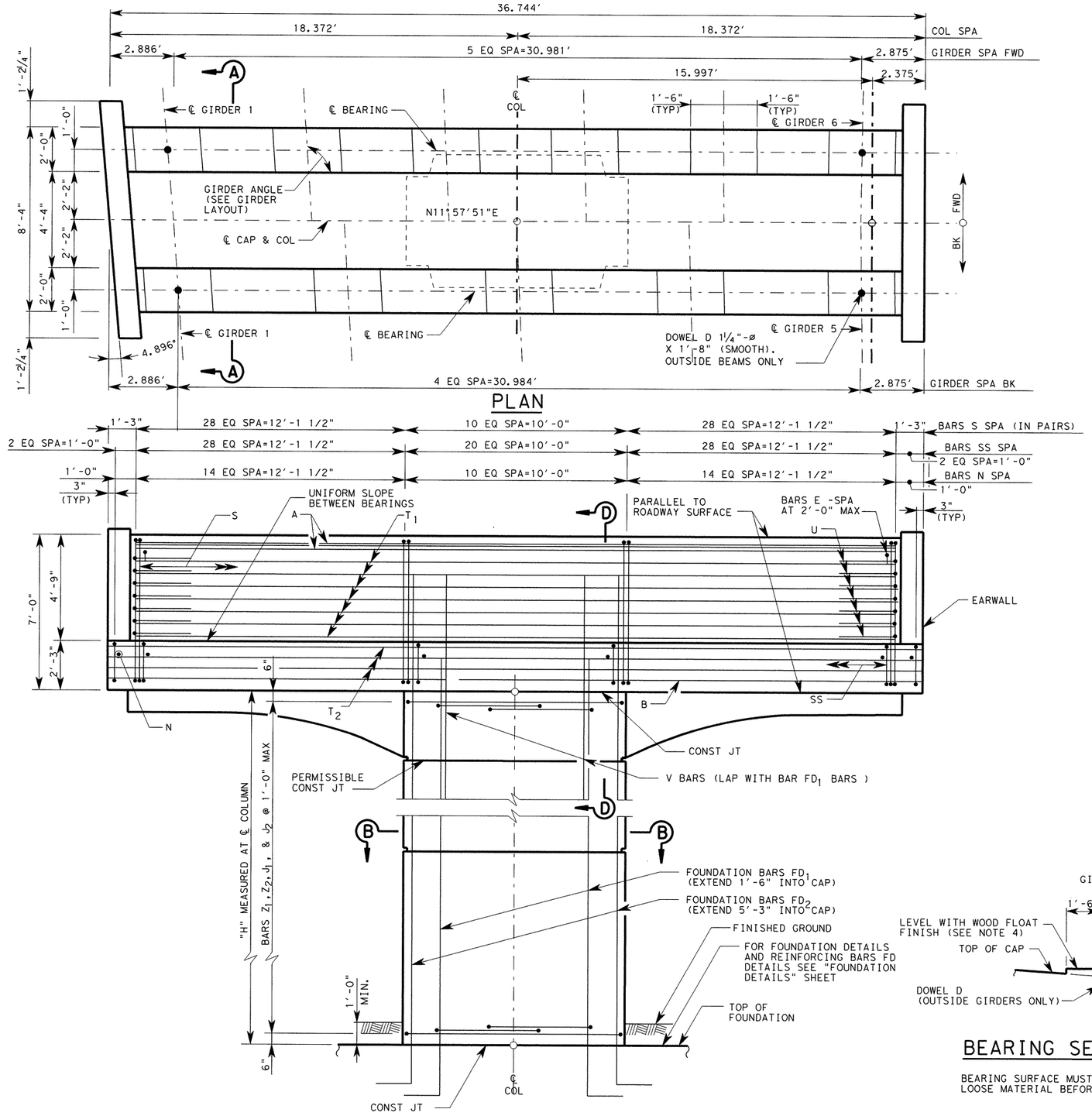

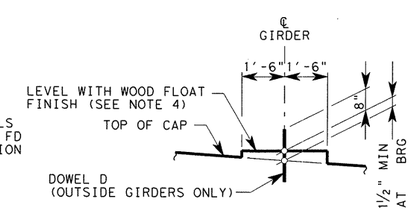

BEARING SEAT ELEVATION

BEARING SURFACE MUST BE CLEAN AND FREE OF ALL LOOSE MATERIAL BEFORE PLACING BEARING PAD

GENERAL NOTES:

1. DESIGNED ACCORDING TO AASHTO LRFD BRIDGE SPECIFICATIONS, 4TH EDITION 2007 AND 2009 CURRENT INTERIMS FOR HL-93 LOADING.
2. CONCRETE STRENGTH F'C=3600 PSI.
3. ALL REINFORCING SHALL BE GRADE 60.
4. BEARING SURFACE SHALL BE CLEAN AND FREE OF ALL LOOSE MATERIAL BEFORE PLACING BEARING PAD.
5. SEE "AESTHETIC TREATMENT REINFORCEMENT DETAILS" SHEET FOR ARCH REINFORCEMENT AND AESTHETIC REVEAL DETAIL.

STATE OF TEXAS
OSAMA A. SHAHAWY
88476
LICENSED
PROFESSIONAL ENGINEER
4/11/11

HL-93 LOADING

REV. No.	DATE	REVISION	BY
△			
△			
△			

PBSJ an Atkins company TBPE REG. # F-474

Texas Department of Transportation
Austin District
©2011 by TxDOT

SH 45 / O'CONNOR DRIVE EB FRONTAGE RD BENT 14

SCALE: NTS SHEET 16 OF 16

DESIGNED: RBR	FED. RD DIV. No.	STATE	PROJECT No.			HIGHWAY No.
CHECKED: OAS	6	TEXAS				LP 1/SH 45
DRAWN: RBR	STATE DISTRICT	COUNTY	CONTROL No.	SECTION No.	JOB No.	SHEET No.
CHECKED: OAS	AUSTIN	WILLIAMSON	0683	06	027	364

DATE: 4/11/2011 TIME: 10:35:29 AM

PLOT DRIVER: RD*11x17*PDF.plt
PEN TABLE: plotordr*ocon.tbl
FILE: r:\trans-design\o'connor\CADD\BDG\EBFR\OC45BTebfr16.dgn

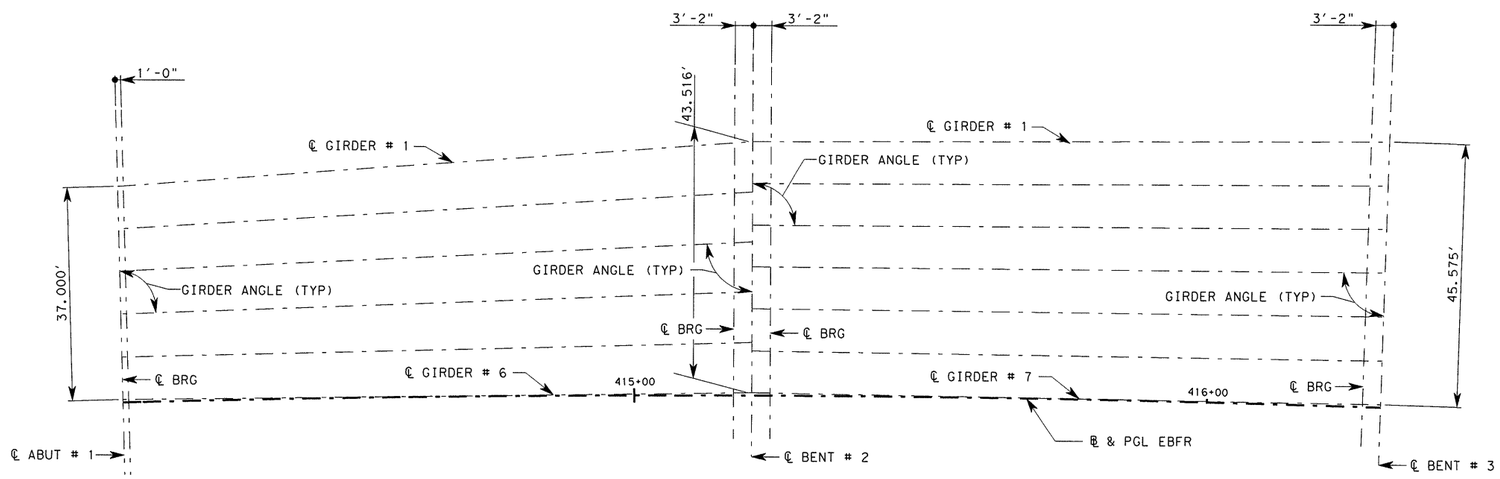

SPAN # 1
(TY Tx54 GIRDERS)

SPAN # 2
(TY Tx54 GIRDERS)

BENT REPORT

ABUT 1 N 8 05' 51.07" W
DISTANCE BETWEEN STATION LINE AND GIRDER 1 37.5000 L

		GIRDER SPANCING (C.L. BENT	GIRDER ANGLE D	M	S
SPAN 1	GIRDER 1	0.000	87	29	39
	GIRDER 2	7.400	88	09	33
	GIRDER 3	7.400	88	49	40
	GIRDER 4	7.400	89	30	00
	GIRDER 5	7.400	90	10	32
	GIRDER 6	7.400	90	51	14
	TOTAL	37.000			

BENT 2 N 6 23' 18.28" W
DISTANCE BETWEEN STATION LINE AND GIRDER 1 44.016 L

		GIRDER SPANCING (C.L. BENT	GIRDER ANGLE D	M	S
SPAN 1	GIRDER 1	0.000	85	47	06
	GIRDER 2	8.703	86	27	00
	GIRDER 3	8.703	87	07	07
	GIRDER 4	8.703	87	47	27
	GIRDER 5	8.703	88	27	59
	GIRDER 6	8.703	89	08	41
	TOTAL	43.515			
SPAN 2	GIRDER 1	0.000	89	47	34
	GIRDER 2	7.252	89	58	06
	GIRDER 3	7.252	90	08	41
	GIRDER 4	7.252	90	19	18
	GIRDER 5	7.252	90	29	58
	GIRDER 6	7.252	90	40	40
	GIRDER 7	7.252	90	51	26
	TOTAL	43.512			

BENT 3 N 4 40' 45.48" W
DISTANCE BETWEEN STATION LINE AND GIRDER 1 46.075 L

		GIRDER SPANCING (C.L. BENT	GIRDER ANGLE D	M	S
SPAN 2	GIRDER 1	0.000	88	05	01
	GIRDER 2	7.596	88	15	33
	GIRDER 3	7.596	88	26	07
	GIRDER 4	7.596	88	36	45
	GIRDER 5	7.596	88	47	25
	GIRDER 6	7.596	88	58	07
	GIRDER 7	7.596	89	08	52
	TOTAL	45.576			

GIRDER REPORT

GIRDER REPORT SPAN 1

	HORIZONTAL DISTANCE C-C BENT	C-C BEARING	TRUE DISTANCE BOT. BM. FLG	GIRDER SLOPE
GIRDER 1	111.153	106.977	108.593	-0.046
GIRDER 2	110.844	106.671	108.287	-0.046
GIRDER 3	110.551	106.380	107.997	-0.046
GIRDER 4	110.272	106.103	107.721	-0.047
GIRDER 5	110.009	105.841	107.461	-0.047
GIRDER 6	109.761	105.594	107.215	-0.048

GIRDER REPORT SPAN 2

	HORIZONTAL DISTANCE C-C BENT	C-C BEARING	TRUE DISTANCE BOT. BM. FLG	GIRDER SLOPE
GIRDER 1	111.109	104.774	106.346	-0.037
GIRDER 2	110.881	104.547	106.119	-0.037
GIRDER 3	110.655	104.321	105.893	-0.037
GIRDER 4	110.430	104.096	105.669	-0.037
GIRDER 5	110.206	103.872	105.445	-0.037
GIRDER 6	109.983	103.649	105.223	-0.038
GIRDER 7	109.761	103.427	105.001	-0.038

HL-93 LOADING

STATE OF TEXAS
OSAMA A. SHAHAWY
88476
LICENSED
PROFESSIONAL ENGINEER
4/11/11

REV. No.	DATE	REVISION	BY
△			
△			
△			

PBSJ
an Atkins company
TBPE REG. # F-474

Texas Department of Transportation
Austin District
©2011 by TxDOT

SH 45 / O'CONNOR DRIVE
EB FRONTAGE RD
I-GIRDER LAYOUT
(SPANS 1-2)

SCALE: 1"=25' SHEET 1 OF 6

DESIGNED: RBR	FED. RD DIV. No.	STATE	PROJECT No.			HIGHWAY No.
CHECKED: OAS	6	TEXAS				LP 1/SH 45

DRAWN: RBR	STATE DISTRICT	COUNTY	CONTROL No.	SECTION No.	JOB No.	SHEET No.
CHECKED: OAS	AUSTIN	WILLIAMSON	0683	06	027	365

DATE: 4/11/2011 TIME: 10:35:30 AM
PLOT DRIVER: RD*11x17*PDF.plt
PEN TABLE: plotordr*ocon.tbl
FILE: r:\trans-design\o'connor\cadd\bdg\EBFR\OC45GLebfr01.dgn

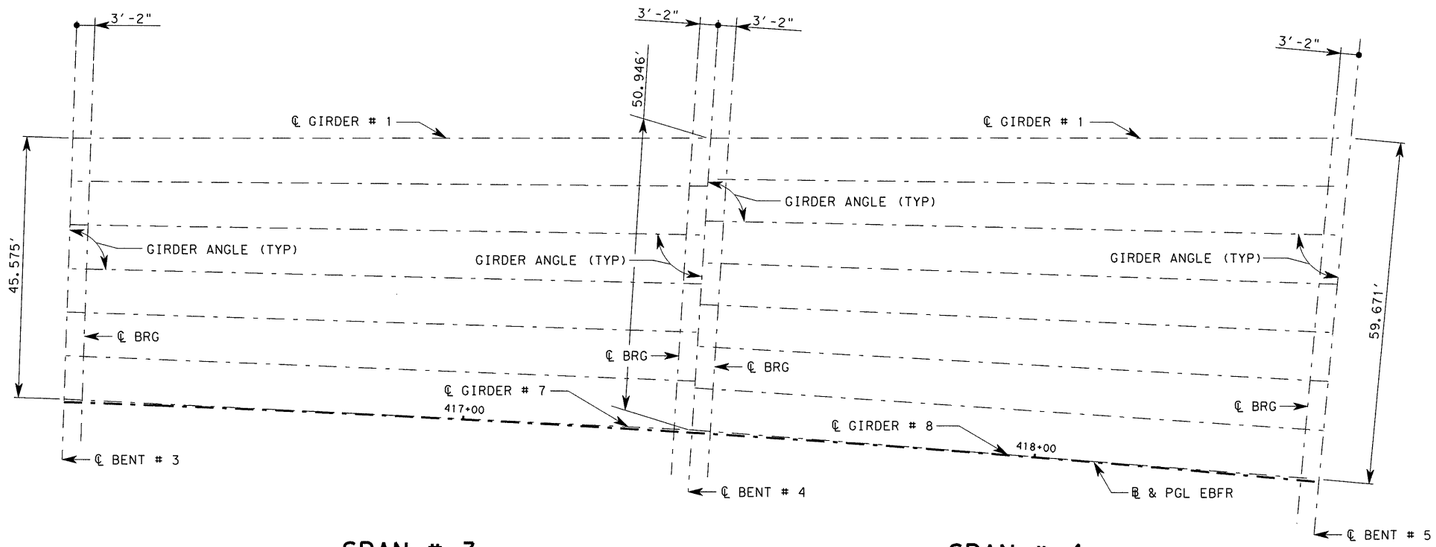

SPAN # 3
(TY Tx54 GIRDERS)

SPAN # 4
(TY Tx54 GIRDERS)

BENT REPORT

BENT 3 N 4 40' 45.48" W
DISTANCE BETWEEN STATION LINE AND GIRDER 1 46.076 L

		GIRDER SPANCING (C.L. BENT	GIRDER ANGLE D	M	S
SPAN 3	GIRDER 1	0.000	88	05	30
	GIRDER 2	7.596	88	32	46
	GIRDER 3	7.596	89	00	12
	GIRDER 4	7.596	89	27	45
	GIRDER 5	7.596	89	55	26
	GIRDER 6	7.596	90	23	14
	GIRDER 7	7.596	90	51	10
	TOTAL	45.576			

BENT 4 N 2 58' 12.00" W
DISTANCE BETWEEN STATION LINE AND GIRDER 1 51.442 L

		GIRDER SPANCING (C.L. BENT	GIRDER ANGLE D	M	S
SPAN 3	GIRDER 1	0.000	86	22	56
	GIRDER 2	8.499	86	50	13
	GIRDER 3	8.499	87	17	38
	GIRDER 4	8.499	87	45	12
	GIRDER 5	8.499	88	12	52
	GIRDER 6	8.499	88	40	41
	GIRDER 7	8.499	89	08	37
	TOTAL	50.994			
SPAN 4	GIRDER 1	0.000	86	22	30
	GIRDER 2	7.277	87	00	17
	GIRDER 3	7.277	87	38	17
	GIRDER 4	7.277	88	16	29
	GIRDER 5	7.277	88	54	54
	GIRDER 6	7.277	89	33	30
	GIRDER 7	7.277	90	12	18
	GIRDER 8	7.277	90	51	16
	TOTAL	50.939			

BENT 5 N 1 15' 40.00" W
DISTANCE BETWEEN STATION LINE AND GIRDER 1 60.171 L

		GIRDER SPANCING (C.L. BENT	GIRDER ANGLE D	M	S
SPAN 4	GIRDER 1	0.000	84	39	58
	GIRDER 2	8.524	85	17	45
	GIRDER 3	8.524	85	55	45
	GIRDER 4	8.524	86	33	57
	GIRDER 5	8.524	87	12	22
	GIRDER 6	8.524	87	50	58
	GIRDER 7	8.524	88	29	46
	GIRDER 8	8.524	89	08	44
	TOTAL	59.668			

GIRDER REPORT

GIRDER REPORT SPAN 3

GIRDER	HORIZONTAL DISTANCE C-C BENT	C-C BEARING	TRUE DISTANCE BOT. BM. FLG	GIRDER SLOPE
GIRDER 1	111.330	104.988	106.512	-0.020
GIRDER 2	111.050	104.711	106.235	-0.021
GIRDER 3	110.778	104.440	105.964	-0.021
GIRDER 4	110.512	104.176	105.700	-0.021
GIRDER 5	110.254	103.919	105.443	-0.021
GIRDER 6	110.003	103.669	105.194	-0.022
GIRDER 7	109.761	103.426	104.951	-0.022

GIRDER REPORT SPAN 4

GIRDER	HORIZONTAL DISTANCE C-C BENT	C-C BEARING	TRUE DISTANCE BOT. BM. FLG	GIRDER SLOPE
GIRDER 1	111.752	105.398	106.904	-0.004
GIRDER 2	111.429	105.080	106.585	-0.004
GIRDER 3	111.118	104.774	106.278	-0.005
GIRDER 4	110.821	104.480	105.983	-0.005
GIRDER 5	110.536	104.199	105.701	-0.005
GIRDER 6	110.265	103.929	105.431	-0.005
GIRDER 7	110.007	103.673	105.175	-0.006
GIRDER 8	109.761	103.429	104.931	-0.006

STATE OF TEXAS
OSAMA A. SHAHAWY
88476
LICENSED
PROFESSIONAL ENGINEER
4/11/11

HL-93
LOADING

REV. No.	DATE	REVISION	BY
△			
△			
△			

PBSJ
an Atkins company
TBPE REG. # F-474

Texas Department of Transportation
Austin District
©2011 by TxDOT

SH 45 / O'CONNOR DRIVE
EB FRONTAGE RD
I-GIRDER LAYOUT
(SPANS 3-4)

SCALE: 1"=25'
SHEET 2 OF 6

DESIGNED: RBR	FED. RD DIV. No.	STATE	PROJECT No.			HIGHWAY No.	
CHECKED: OAS	6	TEXAS				LP 1/SH 45	
DRAWN: RBR	STATE DISTRICT	COUNTY	CONTROL No.	SECTION No.	JOB No.	SHEET No.	
CHECKED: OAS	AUSTIN	WILLIAMSON	0683	06	027	366	

DATE: 4/11/2011 TIME: 10:35:32 AM
PLOT DRIVER: RD*11x17*PDF.plt
PEN TABLE: plotordr*ocon.tbl
FILE: r:\trans-design\o'connor\cadd\bdg\EBFR\OC45GLebfr02.dgn

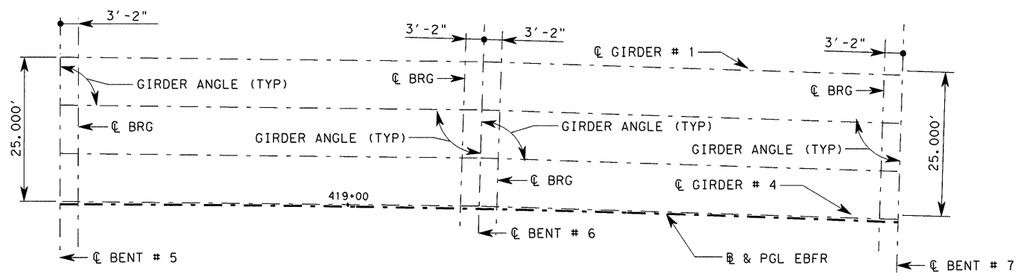

SPAN # 5
(TY Tx54 GIRDERS)

SPAN # 6
(TY Tx54 GIRDERS)

BENT REPORT

Bent 5 N 1 15' 40" W
Distance between Station Line and Girder 1 25.5 L

		Girder Spancin (C.L. Bent	Beam Angle D	M	S
Span 5	Beam 1	0.000	90	34	10
	Beam 2	8.333	90	34	10
	Beam 3	8.333	90	34	10
	Beam 4	8.333	90	34	10
	Total	25.000			

Bent 6 N 0 07' 19" W
Distance between Station Line and Girder 1 25.5 L

		Girder Spancing (C.L. Bent	Beam Angle D	M	S
Span 6	Beam 1	0.000	90	34	11
	Beam 2	8.333	90	34	11
	Beam 3	8.333	90	34	10
	Beam 4	8.333	90	34	09
	Total	25.000			

Bent 6 N 0 07' 19" W
Distance between Station Line and Girder 1 25.5 L

		Girder Spancing (C.L. Bent	Beam Angle D	M	S
Span 5	Beam 1	0.000	89	25	50
	Beam 2	8.333	89	25	50
	Beam 3	8.333	89	25	50
	Beam 4	8.333	89	25	50
	Total	25.000			

Bent 7 N 1 01' 03" E
Distance between Station Line and Girder 1 25.5 L

		Girder Spancing (C.L. Bent	Beam Angle D	M	S
Span 6	Beam 1	0.000	89	25	49
	Beam 2	8.333	89	25	49
	Beam 3	8.333	89	25	47
	Beam 4	8.333	89	25	46
	Total	25.000			

GIRDER REPORT

Beam Reprt Span 5

	Horizontal Distance C-C Bent	C-C Bearing	True Distanc Girder Bot. BM.	Slope
Beam 1	73.656	67.322	68.824	0.007
Beam 2	73.490	67.156	68.658	0.007
Beam 3	73.324	66.991	68.493	0.007
Beam 4	73.159	66.825	68.327	0.008

Beam Reprt Span 6

	Horizontal Distance C-C Bent	C-C Bearing	True Distanc Girder Bot. BM.	Slope
Beam 1	73.656	67.352	68.863	0.018
Beam 2	73.490	67.187	68.698	0.018
Beam 3	73.324	67.021	68.532	0.018
Beam 4	73.159	66.855	68.366	0.018

STATE OF TEXAS
OSAMA A. SHAHAWY
88476
LICENSED
PROFESSIONAL ENGINEER
4/11/11

HL-93
LOADING

REV. No.	DATE	REVISION	BY
△			
△			
△			

PBSJ
an Atkins company
TBPE REG. # F-474

Texas Department of Transportation
Austin District
©2011 by TxDOT

SH 45 / O'CONNOR DRIVE
EB FRONTAGE RD
I-GIRDER LAYOUT
(SPANS 5-6)

SCALE: 1"=25'
SHEET 3 OF 6

DESIGNED: RBR	FED. RD DIV. No.	STATE	PROJECT No.			HIGHWAY No.
CHECKED: OAS	6	TEXAS				LP 1/SH 45
DRAWN: RBR	STATE DISTRICT	COUNTY	CONTROL No.	SECTION No.	JOB No.	SHEET No.
CHECKED: OAS	AUSTIN	WILLIAMSON	0683	06	027	367

DATE: 4/11/2011 TIME: 10:35:33 AM
PLOT DRIVER: RD*11x17*PDF.plt
PEN TABLE: plotordr*occon.tbl
FILE: r:\trans-design\o'connor\cadd\bdg\EBFR\OC45GLebfr03.dgn

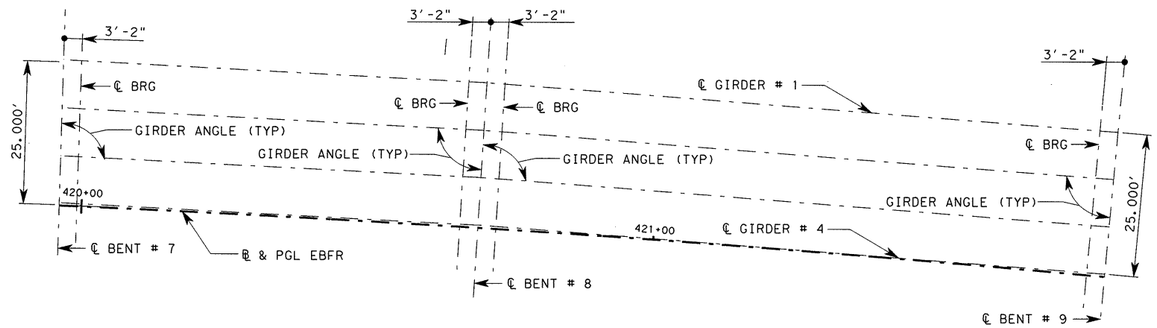

SPAN # 7
(TY Tx54 GIRDERS)

SPAN # 8
(TY Tx54 GIRDERS)

BENT REPORT

Bent 7 N 1 01' 03" E
Distance between Station Line and Girder 1 25.5 L

		Girder Spancin (C.L. Bent	Beam Angle D	M	S
Span 6	Beam 1	0.000	90	34	11
	Beam 2	8.333	90	34	11
	Beam 3	8.333	90	34	11
	Beam 4	8.333	90	34	11
	Total	25.000			

Bent 8 N 2 09' 26" E
Distance between Station Line and Girder 1 25.5 L

		Girder Spancing (C.L. Bent	Beam Angle D	M	S
Span 7	Beam 1	0.000	90	51	16
	Beam 2	8.333	90	51	16
	Beam 3	8.333	90	51	15
	Beam 4	8.333	90	51	15
	Total	25.000			

Bent 8 N 2 09' 26" E
Distance between Station Line and Girder 1 25.5 L

		Girder Spancing (C.L. Bent	Beam Angle D	M	S
Span 7	Beam 1	0.000	89	25	50
	Beam 2	8.333	89	25	50
	Beam 3	8.333	89	25	50
	Beam 4	8.333	89	25	50
	Total	25.000			

Bent 9 N 3 51' 59" E
Distance between Station Line and Girder 1 25.5 L

		Girder Spancing (C.L. Bent	Beam Angle D	M	S
Span 8	Beam 1	0.000	89	08	43
	Beam 2	8.333	89	08	43
	Beam 3	8.333	89	08	43
	Beam 4	8.333	89	08	42
	Total	25.000			

GIRDER REPORT

Beam Reprt Span 7

	Horizontal Distance C-C Bent	C-C Bearing	True Distance Girder Bot. BM. FLG	Slope
Beam 1	73.676	67.342	68.859	0.022
Beam 2	73.510	67.177	68.693	0.022
Beam 3	73.344	67.011	68.527	0.022
Beam 4	73.179	66.845	68.362	0.022

Beam Reprt Span 8

	Horizontal Distance C-C Bent	C-C Bearing	True Distance Girder Bot. BM. FLG	Slope
Beam 1	110.507	104.173	105.689	0.018
Beam 2	110.258	103.924	105.441	0.018
Beam 3	110.009	103.675	105.192	0.018
Beam 4	109.761	103.427	104.944	0.018

HL-93
LOADING

STATE OF TEXAS
OSAMA A. SHAHAWY
88476
LICENSED
PROFESSIONAL ENGINEER
4/11/11

REV. No.	DATE	REVISION	BY
△			
△			
△			

PBSJ
an Atkins company
TBPE REG. # F-474

Texas Department of Transportation
Austin District
©2011 by TxDOT

SH 45 / O'CONNOR DRIVE
EB FRONTAGE RD
I-GIRDER LAYOUT
(SPANS 7-8)

SCALE: 1"=25'
SHEET 4 OF 6

DESIGNED: RBR	FED. RD DIV. No.	STATE	PROJECT No.		HIGHWAY No.		
CHECKED: OAS	6	TEXAS			LP 1/SH 45		
DRAWN: RBR	STATE DISTRICT	COUNTY	CONTROL No.	SECTION No.	JOB No.	SHEET No.	
CHECKED: OAS	AUSTIN	WILLIAMSON	0683	06	027	368	

DATE: 4/11/2011 TIME: 10:35:35 AM
PLOT DRIVER: RD*11x17*PDF.plt
PEN TABLE: plotordr*ocon.tbl
FILE: r:\trans-design\o'connor\cadd\bdg\EBFR\OC45GLebfr04.dgn

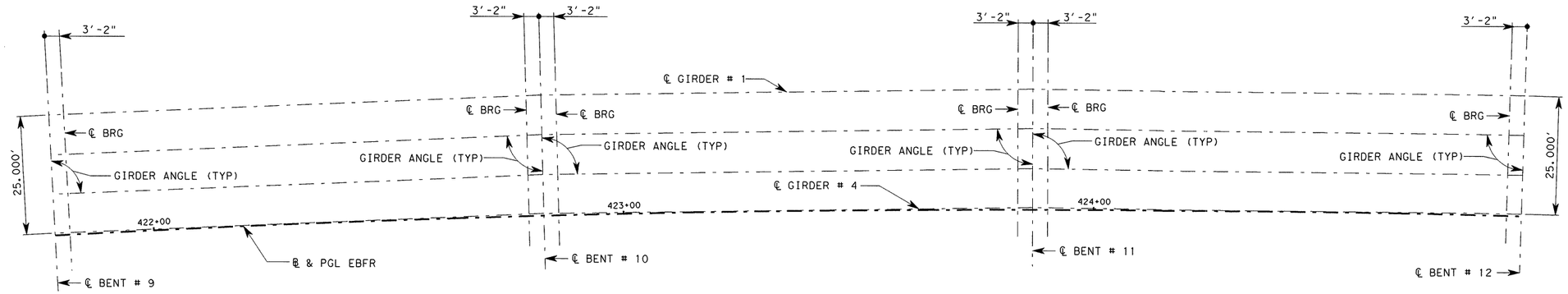

SPAN # 9
(TY Tx54 GIRDERS)

SPAN # 10
(TY Tx54 GIRDERS)

SPAN # 11
(TY Tx54 GIRDERS)

BENT REPORT

BENT 9 N 3 51' 59.00" E
DISTANCE BETWEEN STATION LINE AND GIRDER 1 25.500 L

		GIRDER SPANCING (C.L. BENT	GIRDER ANGLE D	M	S
SPAN 9	GIRDER 1	0.000	90	48	35
	GIRDER 2	8.333	90	48	35
	GIRDER 3	8.333	90	48	35
	GIRDER 4	8.333	90	48	35
	TOTAL	25.000			

BENT 10 N 5 29' 09.00" E
DISTANCE BETWEEN STATION LINE AND GIRDER 1 25.500 L

		GIRDER SPANCING (C.L. BENT	GIRDER ANGLE D	M	S
SPAN 9	GIRDER 1	0.000	89	11	25
	GIRDER 2	8.333	89	11	25
	GIRDER 3	8.333	89	11	25
	GIRDER 4	8.333	89	11	25
	TOTAL	25.000			
SPAN 10	GIRDER 1	0.000	90	48	35
	GIRDER 2	8.333	90	48	35
	GIRDER 3	8.333	90	48	35
	GIRDER 4	8.333	90	48	35
	TOTAL	25.000			

BENT 11 N 7 06' 20.00" E
DISTANCE BETWEEN STATION LINE AND GIRDER 1 25.500 L

		GIRDER SPANCING (C.L. BENT	GIRDER ANGLE D	M	S
SPAN 10	GIRDER 1	0.000	89	11	25
	GIRDER 2	8.333	89	11	25
	GIRDER 3	8.333	89	11	25
	GIRDER 4	8.333	89	11	25
	TOTAL	25.000			
SPAN 11	GIRDER 1	0.000	90	48	35
	GIRDER 2	8.333	90	48	35
	GIRDER 3	8.333	90	48	35
	GIRDER 4	8.333	90	48	35
	TOTAL	25.000			

BENT 12 N 8 43' 30.00" E
DISTANCE BETWEEN STATION LINE AND GIRDER 1 25.500 L

		GIRDER SPANCING (C.L. BENT	GIRDER ANGLE D	M	S
SPAN 11	GIRDER 1	0.000	89	11	25
	GIRDER 2	8.333	89	11	25
	GIRDER 3	8.333	89	11	25
	GIRDER 4	8.333	89	11	25
	TOTAL	25.000			

GIRDER REPORT

GIRDER REPORT SPAN 9

	HORIZONTAL DISTANCE C-C BENT	C-C BEARING	TRUE DISTANCE BOT. BM. FLG	GIRDER SLOPE
GIRDER 1	104.717	98.383	99.888	0.01
GIRDER 2	104.482	98.148	99.653	0.01
GIRDER 3	104.246	97.912	99.417	0.01
GIRDER 4	104.011	97.677	99.182	0.01

GIRDER REPORT SPAN 10

	HORIZONTAL DISTANCE C-C BENT	C-C BEARING	TRUE DISTANCE BOT. BM. FLG	GIRDER SLOPE
GIRDER 1	104.717	98.383	99.884	0.0018
GIRDER 2	104.482	98.148	99.648	0.0018
GIRDER 3	104.246	97.912	99.413	0.0018
GIRDER 4	104.011	97.677	99.177	0.0018

GIRDER REPORT SPAN 11

	HORIZONTAL DISTANCE C-C BENT	C-C BEARING	TRUE DISTANCE BOT. BM. FLG	GIRDER SLOPE
GIRDER 1	104.717	98.383	99.885	-0.0064
GIRDER 2	104.482	98.148	99.65	-0.0064
GIRDER 3	104.246	97.912	99.414	-0.0064
GIRDER 4	104.011	97.677	99.179	-0.0064

STATE OF TEXAS
OSAMA A. SHAHAWY
88476
LICENSED PROFESSIONAL ENGINEER
4/11/11

HL-93 LOADING

REV. No.	DATE	REVISION	BY
△			
△			
△			

PBSJ an Atkins company TBPE REG. # F-474

Texas Department of Transportation
Austin District
©2011 by TxDOT

SH 45 / O'CONNOR DRIVE
EB FRONTAGE RD
I-GIRDER LAYOUT
(SPANS 9-11)

SCALE: 1"=25' SHEET 5 OF 6

DESIGNED: RBR	FED. RD DIV. No.	STATE	PROJECT No.			HIGHWAY No.	
CHECKED: OAS	6	TEXAS				LP 1/SH 45	
DRAWN: RBR	STATE DISTRICT	COUNTY		CONTROL No.	SECTION No.	JOB No.	SHEET No.
CHECKED: OAS	AUSTIN	WILLIAMSON		0683	06	027	369

PLOT DRIVER: RD*11x17*PDF.plt
PEN TABLE: plotordr*ocon.tbl
FILE: r:\trans-design\o'connor\cadd\bdg\EBFR\OC45GLebfr05.dgn
DATE: 4/11/2011 TIME: 10:35:36 AM

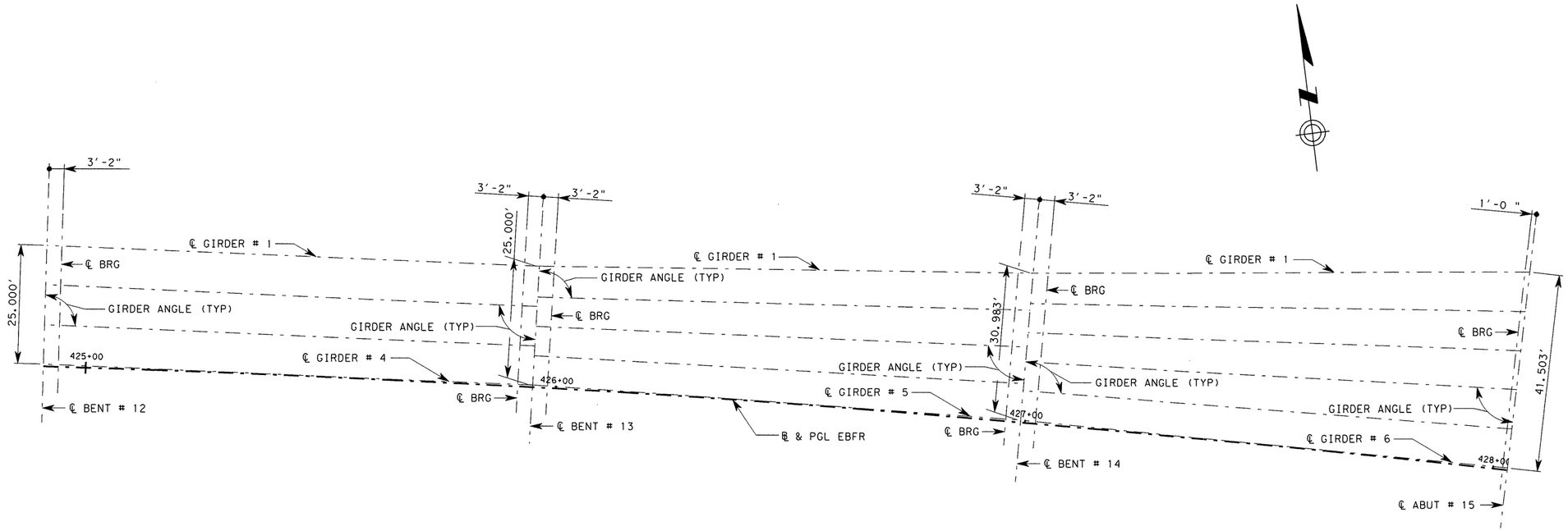

SPAN # 12
(TY Tx54 GIRDERS)

SPAN # 13
(TY Tx54 GIRDERS)

SPAN # 14
(TY Tx54 GIRDERS)

BENT REPORT

BENT 12 N 8 43' 30.00" E
DISTANCE BETWEEN STATION LINE AND GIRDER 1 25.500 L

		GIRDER SPANCING (C.L. BENT	GIRDER ANGLE D	M	S
SPAN 12	GIRDER 1	0.000	90	48	35
	GIRDER 2	8.333	90	48	35
	GIRDER 3	8.333	90	48	35
	GIRDER 4	8.333	90	48	35
	TOTAL	25.000			

BENT 13 N 10 20' 41.00" E
DISTANCE BETWEEN STATION LINE AND GIRDER 1 25.500 L

		GIRDER SPANCING (C.L. BENT	GIRDER ANGLE D	M	S
SPAN 12	GIRDER 1	0.000	89	11	24
	GIRDER 2	8.333	89	11	24
	GIRDER 3	8.333	89	11	24
	GIRDER 4	8.333	89	11	24
	TOTAL	25.000			
SPAN 13	GIRDER 1	0.000	87	32	37
	GIRDER 2	6.405	88	16	10
	GIRDER 3	6.405	88	59	56
	GIRDER 4	6.405	89	43	54
	GIRDER 5	6.405	90	28	3
	TOTAL	25.620			

BENT 14 N 11 57' 51.00" E
DISTANCE BETWEEN STATION LINE AND GIRDER 1 25.500 L

		GIRDER SPANCING (C.L. BENT	GIRDER ANGLE D	M	S
SPAN 13	GIRDER 1	0.000	85	55	27
	GIRDER 2	7.745	86	38	59
	GIRDER 3	7.745	87	22	46
	GIRDER 4	7.745	88	6	44
	GIRDER 5	7.745	88	50	53
	TOTAL	30.980			
SPAN 14	GIRDER 1	0.000	85	5	29
	GIRDER 2	6.196	86	13'	15
	GIRDER 3	6.196	87	21	29
	GIRDER 4	6.196	88	30'	10
	GIRDER 5	6.196	89	39	14
	GIRDER 6	6.196	90	48	37
	TOTAL	30.980			

ABUT 15 N 13 35' 01.00" E
DISTANCE BETWEEN STATION LINE AND GIRDER 1 42.000 L

		GIRDER SPANCING (C.L. BENT	GIRDER ANGLE D	M	S
SPAN 14	GIRDER 1	0.000	83	28	19
	GIRDER 2	8.300	84	36	5
	GIRDER 3	8.300	85	44	19
	GIRDER 4	8.300	86	53	0
	GIRDER 5	8.300	88	2	4
	GIRDER 6	8.300	89	11	27
	TOTAL	41.500			

GIRDER REPORT

GIRDER REPORT SPAN 12

	HORIZONTAL DISTANCE C-C BENT	C-C BEARING	TRUE DISTANCE BOT. BM. FLG	GIRDER SLOPE
GIRDER 1	104.717	98.383	99.894	-0.0141
GIRDER 2	104.482	98.148	99.658	-0.0142
GIRDER 3	104.246	97.912	99.422	-0.0142
GIRDER 4	104.011	97.677	99.187	-0.0142

GIRDER REPORT SPAN 13

	HORIZONTAL DISTANCE C-C BENT	C-C BEARING	TRUE DISTANCE BOT. BM. FLG	GIRDER SLOPE
GIRDER 1	104.972	98.628	100.141	-0.0147
GIRDER 2	104.705	98.365	99.878	-0.015
GIRDER 3	104.455	98.118	99.63	-0.0153
GIRDER 4	104.221	97.886	99.399	-0.0156
GIRDER 5	104.005	97.67	99.183	-0.0159

GIRDER REPORT SPAN 14

	HORIZONTAL DISTANCE C-C BENT	C-C BEARING	TRUE DISTANCE BOT. BM. FLG	GIRDER SLOPE
GIRDER 1	105.561	101.376	102.893	-0.0137
GIRDER 2	105.168	100.99	102.505	-0.0141
GIRDER 3	104.816	100.643	102.157	-0.0146
GIRDER 4	104.506	100.336	101.849	-0.0151
GIRDER 5	104.237	100.07	101.582	-0.0155
GIRDER 6	104.011	99.843	101.356	-0.016

STATE OF TEXAS
OSAMA A. SHAHAWY
88476
LICENSED PROFESSIONAL ENGINEER
4/11/11

HL-93 LOADING

REV. No.	DATE	REVISION	BY
△			
△			
△			

PBSJ an Atkins company TBPE REG. # F-474

Texas Department of Transportation
Austin District
©2011 by TxDOT

SH 45 / O'CONNOR DRIVE
EB FRONTAGE RD
I-GIRDER LAYOUT
(SPANS 12-14)

SCALE: 1"=25' SHEET 6 OF 6

DESIGNED: RBR	FED. RD DIV. No.	STATE	PROJECT No.			HIGHWAY No.	
CHECKED: OAS	6	TEXAS				LP 1/SH 45	
DRAWN: RBR	STATE DISTRICT	COUNTY	CONTROL No.	SECTION No.	JOB No.	SHEET No.	
CHECKED: OAS	AUSTIN	WILLIAMSON	0683	06	027	370	

DATE: 4/11/2011 TIME: 10:35:38 AM
PLOT DRIVER: RD*11x17*PDF.pltPEN TABLE: plotordr*xcon.tbl
FILE: r:\trans-design\o'connor\cadd\bdg\ebfr\OC45GLebfr06.dgn

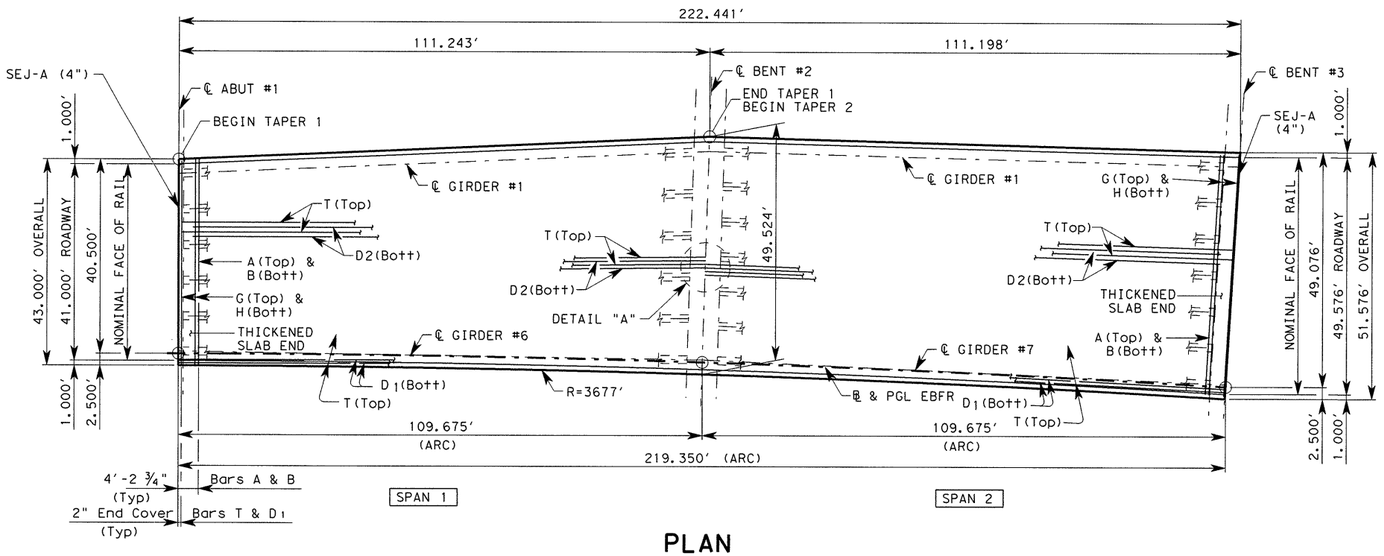

PLAN

BAR TABLE	
BAR	SIZE
A	#5
B	#5
D	#5
G	#5
H	#5
J	#5
M	#5
T	#4
U	#4

TABLE OF ESTIMATED QUANTITIES				
SPAN	REINF CONCRETE SLAB	① PRESTR CONCRETE GIRDERS (Tx54)	CLASS "S" CONCRETE	② TOTAL REINF STEEL
	SF	LF	CY	LB
1	5144	647.3	127	33,346
2	5482	739.7	136	35633
TOTAL	10,627	1,387.0	263	69,069

① LENGTHS SHOWN ARE BOTTOM FLANGE LENGTHS WITH ADJUSTMENTS MADE FOR GIRDER SLOPE.

② REINFORCING STEEL WEIGHT IS CALCULATED USING AN APPROXIMATE FACTOR OF 6.5 LB/SF.

GENERAL NOTES:

1. DESIGNED ACCORDING TO AASHTO LRFD BRIDGE DESIGN SPECIFICATIONS, 4TH EDITION, 2007 AND 2009 CURRENT INTERIM'S FOR HL-93 LOADING.
2. SEE IGTS STANDARD FOR THICKENED SLAB END DETAIL AND QUANTITY ADJUSTMENT
3. SEE PCP (C) OR PMDF (C) STANDARDS FOR DETAILS AND QUANTITY ADJUSTMENT IF EITHER OF THESE OPTIONS ARE USED.
4. ALL REINFORCING SHOULD BE GRADE 60.
5. CONCRETE STRENGTH F'C = 4,000 PSI
6. BAR LAPS, WHERE REQUIRED, SHALL BE AS FOLLOWS:
   #4 = 1'-5"
   #5 = 1'-9"
7. SEE MISC. SLAB DETAILS FOR REINFORCING OVER BENTS
8. SPACE BARS U WITH GIRDER BARS R IN ALL AREAS WHERE MEASURED HAUNCH EXCEEDS 3/2".
9. FOR ADDITIONAL SLAB DETAILS, HANCH REINFORCEMENT DETAIL, AND REINFORCEMENT OVER INV-T BENTS, SEE TXDOT STANDARD DETAIL SHEET "IGMS (MOD)".
10. FOR DECK DRAIN LOCATION AND REINFORCEMENT DETAILS, SEE BRIDGE LAYOUT SHEETS AND BRIDGE DRAIN DETAIL SHEETS.

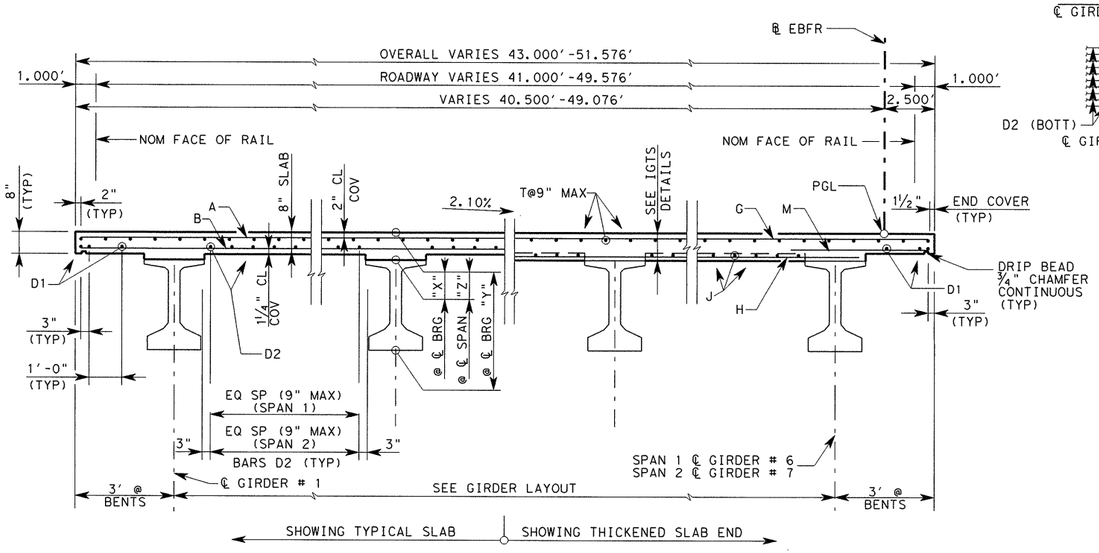

TYPICAL RADIAL SECTION

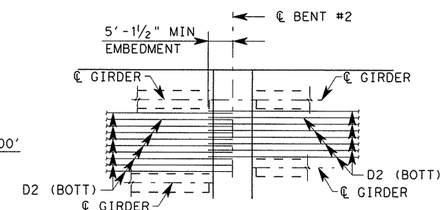

DETAIL A

TABLE OF SECTION DEPTHS			
SPAN #	"X" AT ℄ BRG	"Y" AT ℄ BRG	"Z" AT ℄ SPAN
1	11 1/4"	5'-5 1/4"	11"
2	13 1/2"	5'-7 1/2"	11"

SPAN #	GIRDER #	"A"	"B"
1	ALL	0.094	0.132
2	ALL	0.080	0.112

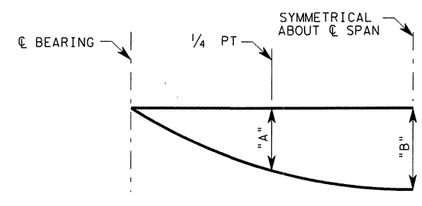

NOTE: DEFLECTIONS SHOWN ARE DUE TO CONCRETE SLAB ONLY. ($E_c = 5 \times 10^6$ PSI) CALCULATED DEFLECTIONS SHOWN ARE THEORETICAL. ACTUAL DIMENSIONS MAY BE LESS. DEFLECTIONS SHALL BE ADJUSTED BASED ON FIELD OBSERVATIONS

DEAD LOAD DEFLECTION DIAGRAM

HL-93 LOADING

STATE OF TEXAS
OSAMA A. SHAHAWY
88476
LICENSED
PROFESSIONAL ENGINEER
4/11/11

REV. No.	DATE	REVISION	BY
△			
△			
△			

PBSJ an Atkins company TBPE REG. # F-474

Texas Department of Transportation
Austin District
©2011 by TxDOT

SH 45 / O'CONNOR DRIVE
EB FRONTAGE RD
219.50' PRESTRESS
CONC I-GIRDER UNIT
(SPANS 1-2)

SCALE: NTS
SHEET 1 OF 6

DESIGNED: RBR	FED. RD DIV. No.	STATE	PROJECT No.			HIGHWAY No.	
CHECKED: OAS	6	TEXAS				LP 1/SH 45	
DRAWN: RBR	STATE DISTRICT	COUNTY	CONTROL No.	SECTION No.	JOB No.	SHEET No.	
CHECKED: OAS	AUSTIN	WILLIAMSON	0683	06	027	371	

PLOT DRIVER: RD*11x17*PDF.plt
PEN TABLE: plotordr*ocon.tbl
FILE: r:\trans-design\o'connor\cadd\bdg\EBFR\OC45Sebfr01.dgn
DATE: 4/11/2011 TIME: 10:35:40 AM

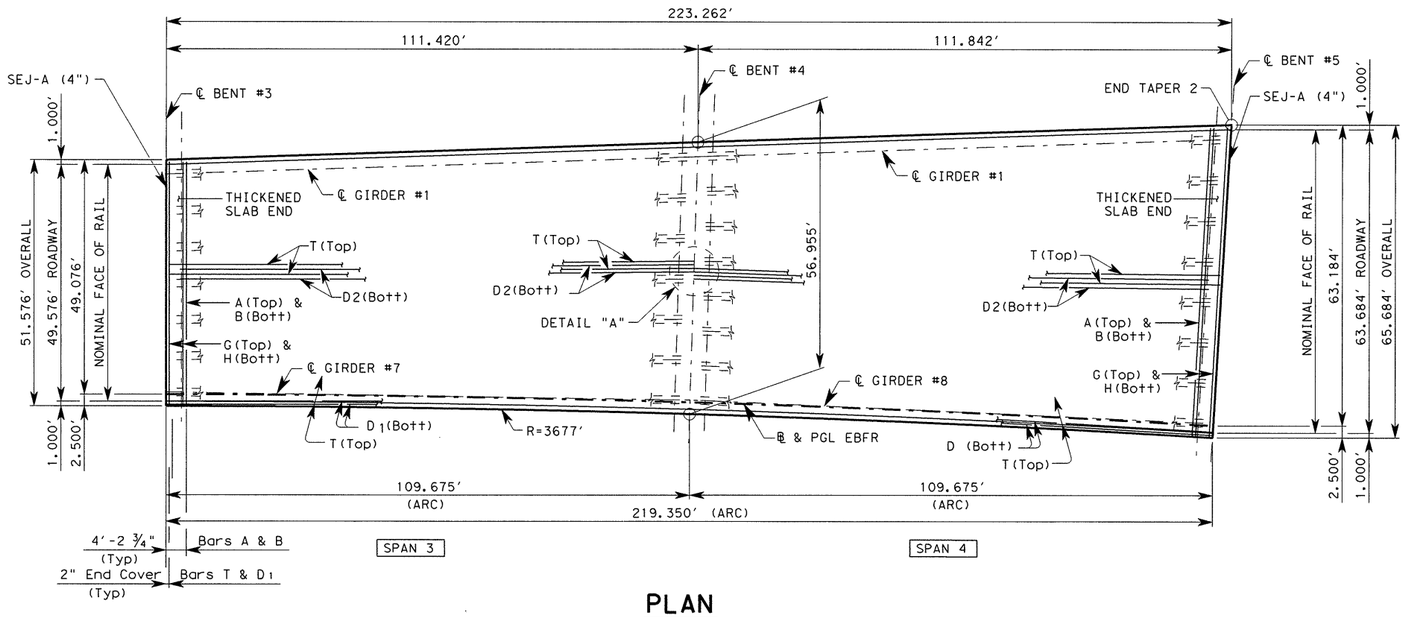

PLAN

BAR TABLE	
BAR	SIZE
A	#5
B	#5
D	#5
G	#5
H	#5
J	#5
M	#5
T	#4
U	#4

TABLE OF ESTIMATED QUANTITIES

SPAN	REINF CONCRETE SLAB	① PRESTR CONCRETE GIRDERS (Tx54)	CLASS "S" CONCRETE	② TOTAL REINF STEEL
	SF	LF	CY	LB
3	5,965	740.0	150	38,770
4	6,749	847.0	170	43,866
TOTAL	12,784	2,974.0	320	83,097

① LENGTHS SHOWN ARE BOTTOM FLANGE LENGTHS WITH ADJUSTMENTS MADE FOR GIRDER SLOPE.

② REINFORCING STEEL WEIGHT IS CALCULATED USING AN APPROXIMATE FACTOR OF 6.5 LB/SF.

GENERAL NOTES:

1. DESIGNED ACCORDING TO AASHTO LRFD BRIDGE DESIGN SPECIFICATIONS, 4TH EDITION, 2007 AND 2009 CURRENT INTERIMS FOR HL-93 LOADING.
2. SEE IGTS STANDARD FOR THICKENED SLAB END DETAIL AND QUANTITY ADJUSTMENT
3. SEE PCP (C) OR PMDF (C) STANDARDS FOR DETAILS AND QUANTITY ADJUSTMENT IF EITHER OF THESE OPTIONS ARE USED.
4. ALL REINFORCING SHOULD BE GRADE 60.
5. CONCRETE STRENGTH F'C = 4,000 PSI
6. BAR LAPS, WHERE REQUIRED, SHALL BE AS FOLLOWS:
   #4 = 1'-5"
   #5 = 1'-9"
7. SEE MISC. SLAB DETAILS FOR REINFORCING OVER BENTS
8. SPACE BARS U WITH GIRDER BARS R IN ALL AREAS WHERE MEASURED HAUNCH EXCEEDS 3½".
9. FOR ADDITIONAL SLAB DETAILS, HANCH REINFORCEMENT DETAIL, AND REINFORCEMENT OVER INV-T BENTS, SEE TXDOT STANDARD DETAIL SHEET "IGMS (MOD)".
10. FOR DECK DRAIN LOCATION AND REINFORCEMENT DETAILS, SEE BRIDGE LAYOUT SHEETS AND BRIDGE DRAIN DETAIL SHEETS.

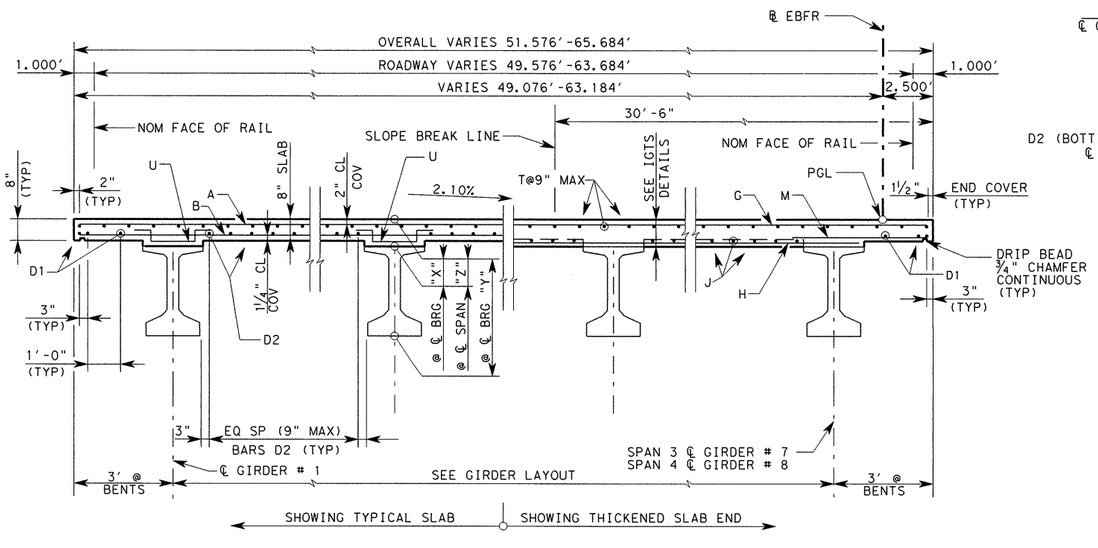

TYPICAL RADIAL SECTION

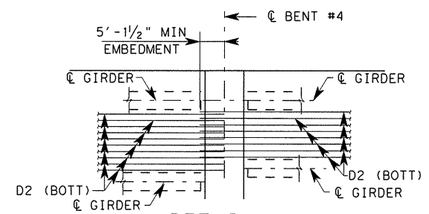

DETAIL A

TABLE OF SECTION DEPTHS			
SPAN #	"X" AT ℄ BRG	"Y" AT ℄ BRG	"Z" AT ℄ SPAN
3	13½"	5'-7½"	11"
4	13½"	5'-7½"	11"

SPAN #	GIRDER #	"A"	"B"
3	ALL	0.092'	0.130'
4	ALL	0.087'	0.122'

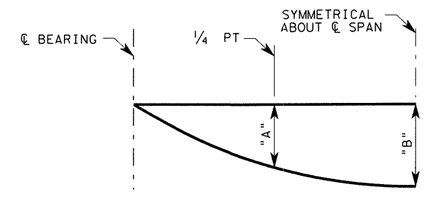

NOTE: DEFLECTIONS SHOWN ARE DUE TO CONCRETE SLAB ONLY. (E_c = 5 x 10^6 PSI) CALCULATED DEFLECTIONS SHOWN ARE THEORETICAL. ACTUAL DIMENSIONS MAY BE LESS. DEFLECTIONS SHALL BE ADJUSTED BASED ON FIELD OBSERVATIONS

DEAD LOAD DEFLECTION DIAGRAM

HL-93 LOADING

STATE OF TEXAS
OSAMA A. SHAHAWY
88476
LICENSED PROFESSIONAL ENGINEER
4/11/11

REV. No.	DATE	REVISION	BY
△			
△			
△			

PBSJ an Atkins company TBPE REG. # F-474

Texas Department of Transportation
Austin District
©2011 by TxDOT

SH 45 / O'CONNOR DRIVE EB FRONTAGE RD 219.50' PRESTRESS CONC I-GIRDER UNIT (SPANS 3-4)

SCALE: NTS SHEET 2 OF 6

DESIGNED: RBR	FED. RD DIV. NO.	STATE	PROJECT No.			HIGHWAY No.
CHECKED: OAS	6	TEXAS				LP 1/SH 45
DRAWN: RBR	STATE DISTRICT	COUNTY	CONTROL No.	SECTION No.	JOB No.	SHEET No.
CHECKED: OAS	AUSTIN	WILLIAMSON	0683	06	027	372

PLOT DRIVER: RD*11x17*PDF.plt
PEN TABLE: plotordr*ocon.tbl
FILE: r:\trans-design\oconnor\cadd\bdg\EBFR\0C456Sebfr02.dgn
DATE: 4/11/2011 TIME: 10:35:42 AM

DATE: 4/11/2011 TIME: 10:35:43 AM

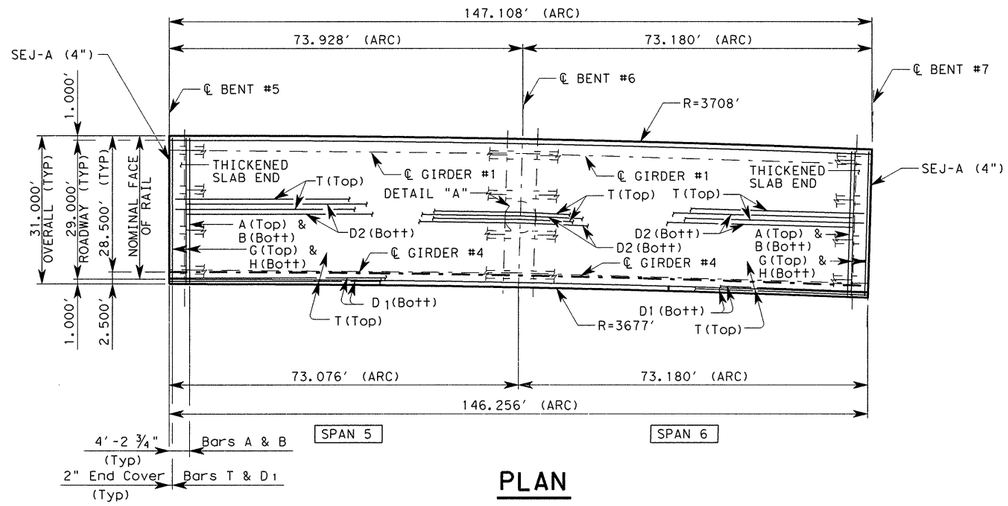

PLAN

TABLE OF ESTIMATED QUANTITIES				
SPAN	REINF CONCRETE SLAB	① PRESTR CONCRETE GIRDERS (Tx54)	CLASS "S" CONCRETE	② TOTAL REINF STEEL
	SF	LF	CY	LB
5	2,279	274.3	56.3	14,814
6	2,269	274.4	56	14,748
TOTAL	4,548	548.7	112.3	29,562

① LENGTHS SHOWN ARE BOTTOM FLANGE LENGTHS WITH ADJUSTMENTS MADE FOR GIRDER SLOPE.

② REINFORCING STEEL WEIGHT IS CALCULATED USING AN APPROXIMATE FACTOR OF 6.5 LB/SF.

GENERAL NOTES:

1. DESIGNED ACCORDING TO AASHTO LRFD BRIDGE DESIGN SPECIFICATIONS, 4TH EDITION, 2007 AND 2009 CURRENT INTERIMS FOR HL-93 LOADING.
2. SEE IGTS STANDARD FOR THICKENED SLAB END DETAIL AND QUANTITY ADJUSTMENT
3. SEE PCP (C) OR PMDF (C) STANDARDS FOR DETAILS AND QUANTITY ADJUSTMENT IF EITHER OF THESE OPTIONS ARE USED.
4. ALL REINFORCING SHOULD BE GRADE 60.
5. CONCRETE STRENGTH F'C = 4,000 PSI
6. BAR LAPS, WHERE REQUIRED, SHALL BE AS FOLLOWS:
   #4 = 1'-5"
   #5 = 1'-9"
7. SEE MISC. SLAB DETAILS FOR REINFORCING OVER BENTS.
8. SPACE BARS U WITH GIRDER BARS R IN ALL AREAS WHERE MEASURED HAUNCH EXCEEDS 3½".
9. FOR ADDITIONAL SLAB DETAILS, HANCH REINFORCEMENT DETAIL, AND REINFORCEMENT OVER INV-T BENTS, SEE TXDOT S ANDARD DETAIL SHEET "IGMS (MOD)".
10. FOR DECK DRAIN LOCATION AND REINFORCEMENT DETAILS, SEE BRIDGE LAYOUT SHEETS AND BRIDGE DRAIN DETAIL SHEETS.

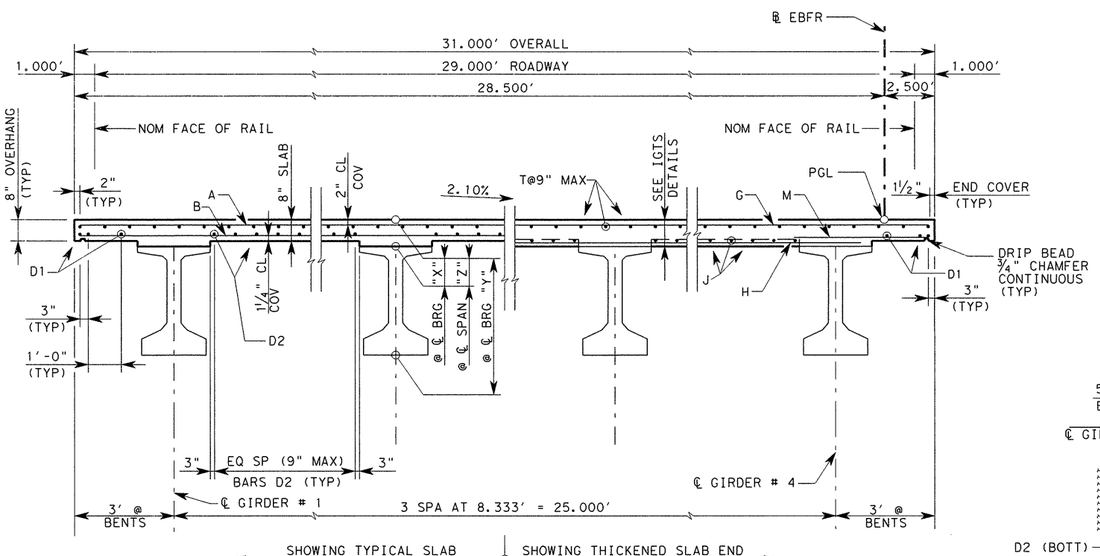

TYPICAL RADIAL SECTION

BAR TABLE	
BAR	SIZE
A	#5
B	#5
D	#5
G	#5
H	#5
J	#5
M	#5
T	#4
U	#4

TABLE OF SECTION DEPTHS			
SPAN #	"X" AT ℄ BRG	"Y" AT ℄ BRG	"Z" AT ℄ SPAN
5	XXX	XXX	XXX
6	XXX	XXX	XXX

SPAN #	GIRDER #	"A"	"B"
5	ALL	XXX	XXX
6	ALL	XXX	XXX

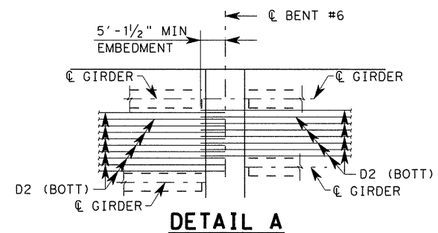

DETAIL A

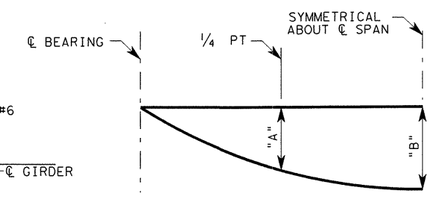

NOTE: DEFLECTIONS SHOWN ARE DUE TO CONCRETE SLAB ONLY. ($E_c = 5 \times 10^6$ PSI) CALCULATED DEFLECTIONS SHOWN ARE THEORETICAL. ACTUAL DIMENSIONS MAY BE LESS. DEFLECTIONS SHALL BE ADJUSTED BASED ON FIELD OBSERVATIONS

DEAD LOAD DEFLECTION DIAGRAM

HL-93 LOADING

STATE OF TEXAS — OSAMA A. SHAHAWY — 88476 — LICENSED PROFESSIONAL ENGINEER — 4/11/11

REV. No.	DATE	REVISION	BY
△			
△			
△			

PBSJ an Atkins company TBPE REG. # F-474

Texas Department of Transportation Austin District

©2011 by TxDOT

SH 45 / O'CONNOR DRIVE EB FRONTAGE RD 146.30' PRESTRESS CONC I-GIRDER UNIT (SPANS 5-6)

SCALE: NTS — SHEET 3 OF 6

DESIGNED: RBR	FED. RD DIV. No.	STATE	PROJECT No.			HIGHWAY No.	
CHECKED: OAS	6	TEXAS				LP 1/SH 45	
DRAWN: RBR	STATE DISTRICT	COUNTY	CONTROL No.	SECTION No.	JOB No.	SHEET No.	
CHECKED: OAS	AUSTIN	WILLIAMSON	0683	06	027	373	

PLOT DRIVER: RD*11x17*PDF.plt
PEN TABLE: plotordr*ocon.tbl
FILE: r:\trans-design\o'connor\cadd\bdg\EBFR\OC45GSebfr03.dgn

DATE: 4/11/2011 TIME: 10:35:45 AM

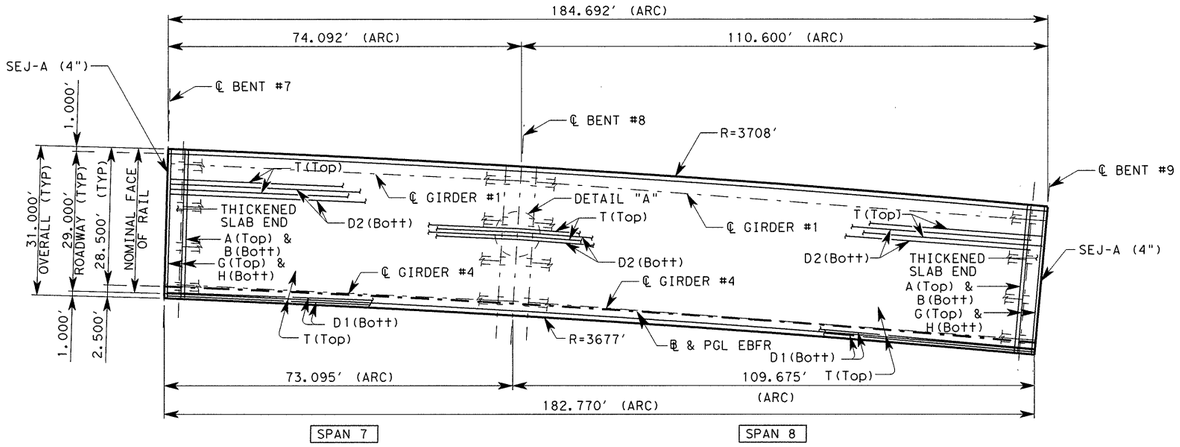

PLAN

TABLE OF ESTIMATED QUANTITIES				
SPAN	REINF CONCRETE SLAB	① PRESTR CONCRETE GIRDERS (Tx54)	CLASS "S" CONCRETE	② TOTAL REINF STEEL
	SF	LF	CY	LB
7	2,282	274.4	56.3	14,833
8	3,415	421.3	84.3	22,197
TOTAL	5,697	695.7	140.6	37,030

① LENGTHS SHOWN ARE BOTTOM FLANGE LENGTHS WITH ADJUSTMENTS MADE FOR GIRDER SLOPE.

② REINFORCING STEEL WEIGHT IS CALCULATED USING AN APPROXIMATE FACTOR OF 6.5 LB/SF.

GENERAL NOTES:

1. DESIGNED ACCORDING TO AASHTO LRFD BRIDGE DESIGN SPECIFICATIONS, 4TH EDITION, 2007 AND 2009 CURRENT INTERIMS FOR HL-93 LOADING.
2. SEE IGTS STANDARD FOR THICKENED SLAB END DETAIL AND QUANTITY ADJUSTMENT
3. SEE PCP (C) OR PMDF (C) STANDARDS FOR DETAILS AND QUANTITY ADJUSTMENT IF EITHER OF THESE OPTIONS ARE USED.
4. ALL REINFORCING SHOULD BE GRADE 60.
5. CONCRETE STRENGTH F'C = 4,000 PSI
6. BAR LAPS, WHERE REQUIRED, SHALL BE AS FOLLOWS:
   #4 = 1'-5"
   #5 = 1'-9"
7. SEE MISC. SLAB DETAILS FOR REINFORCING OVER BENTS.
8. SPACE BARS U WITH GIRDER BARS R IN ALL AREAS WHERE MEASURED HAUNCH EXCEEDS 3½".
9. FOR ADDITIONAL SLAB DETAILS, HANCH REINFORCEMENT DETAIL, AND REINFORCEMENT OVER INV-T BENTS, SEE TXDOT STANDARD DETAIL SHEET "IGMS (MOD)".
10. FOR DECK DRAIN LOCATION AND REINFORCEMENT DETAILS, SEE BRIDGE LAYOUT SHEETS AND BRIDGE DRAIN DETAIL SHEETS.

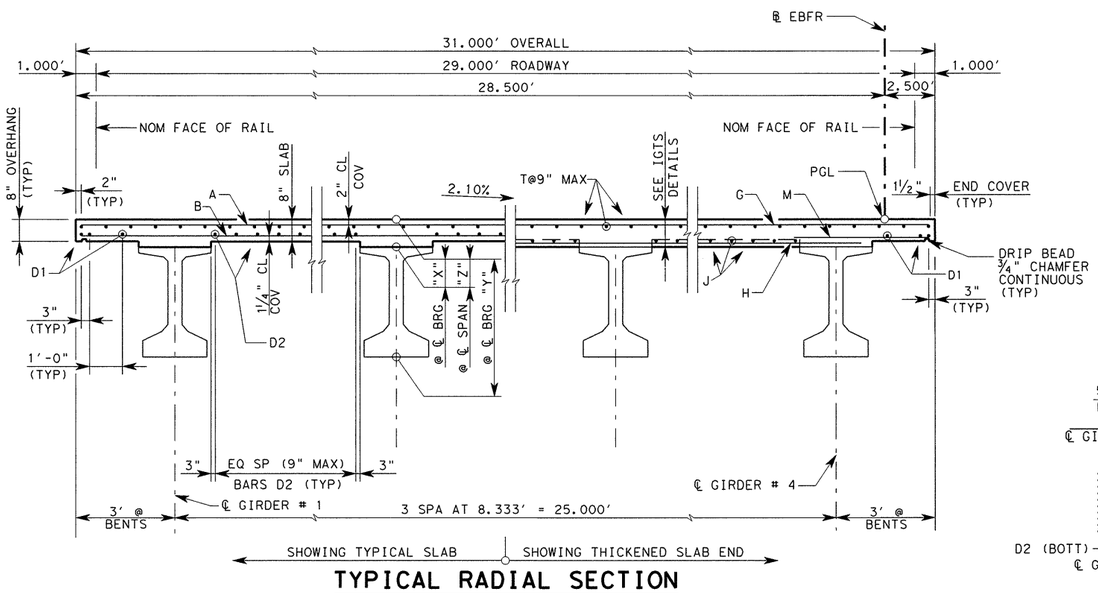

TYPICAL RADIAL SECTION

BAR TABLE	
BAR	SIZE
A	#5
B	#5
D	#5
G	#5
H	#5
J	#5
M	#5
T	#4
U	#4

TABLE OF SECTION DEPTHS			
SPAN #	"X" AT ℄ BRG	"Y" AT ℄ BRG	"Z" AT ℄ SPAN
7	XXX	XXX	XXX
8	XXX	XXX	XXX

SPAN #	GIRDER #	"A"	"B"
7	ALL	XXX	XXX
8	ALL	XXX	XXX

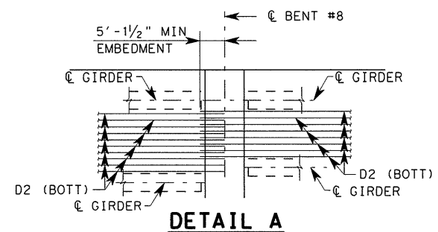

DETAIL A

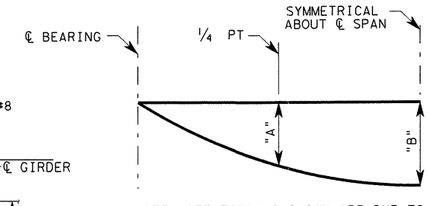

NOTE: DEFLECTIONS SHOWN ARE DUE TO CONCRETE SLAB ONLY. ($E_c = 5 \times 10^6$ PSI) CALCULATED DEFLECTIONS SHOWN ARE THEORETICAL. ACTUAL DIMENSIONS MAY BE LESS. DEFLECTIONS SHALL BE ADJUSTED BASED ON FIELD OBSERVATIONS

DEAD LOAD DEFLECTION DIAGRAM

HL-93 LOADING

STATE OF TEXAS — OSAMA A. SHAHAWY — 88476 — LICENSED PROFESSIONAL ENGINEER — 4/11/11

REV. No.	DATE	REVISION	BY
△			
△			
△			

PBSJ an Atkins company TBPE REG. # F-474

Texas Department of Transportation Austin District

©2011 by TxDOT

SH 45 / O'CONNOR DRIVE EB FRONTAGE RD 182.90' PRESTRESS CONC I-GIRDER UNIT (SPANS 7-8)

SCALE: NTS — SHEET 4 OF 6

DESIGNED: RBR	FED. RD DIV. No.	STATE	PROJECT No.		HIGHWAY No.	
CHECKED: OAS	6	TEXAS			LP 1/SH 45	
DRAWN: RBR	STATE DISTRICT	COUNTY	CONTROL No.	SECTION No.	JOB No.	SHEET No.
CHECKED: OAS	AUSTIN	WILLIAMSON	0683	06	027	374

PLOT DRIVER: RD*11x17*PDF.plt
PEN TABLE: plotordrkocon.tbl
FILE: r:\trans-design\o'connor\cadd\bdg\EBFR\OC45GSebfr04.dgn

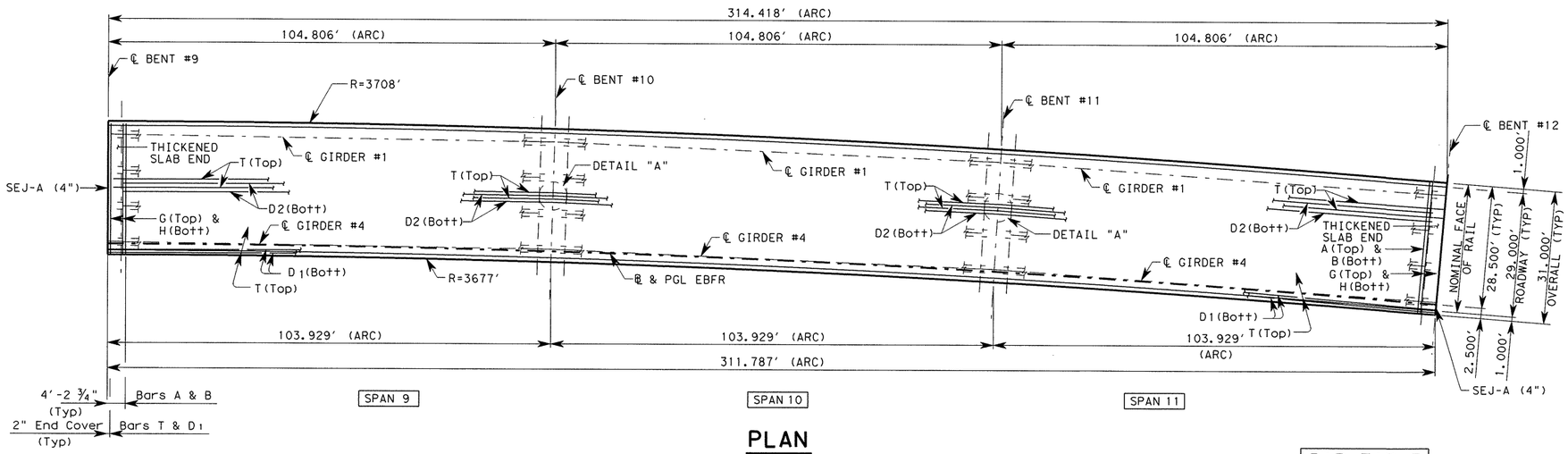

PLAN

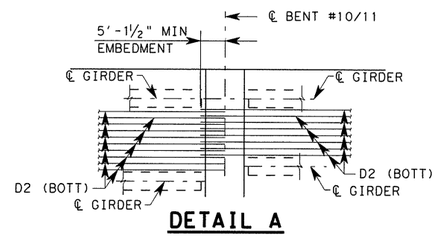

DETAIL A

BAR TABLE	
BAR	SIZE
A	#5
B	#5
D	#5
G	#5
H	#5
J	#5
M	#5
T	#4

TABLE OF ESTIMATED QUANTITIES				
SPAN	REINF CONCRETE SLAB	①PRESTR CONCRETE GIRDERS (Tx54)	CLASS "S" CONCRETE	② TOTAL REINF STEEL
	SF	LF	CY	LB
9	3,235	398.1	81	21,028
10	3,233	398.1	81	21,015
11	3,228	398.1	81	20,982
TOTAL	9,696	1,194.3	243	63,025

① LENGTHS SHOWN ARE BOTTOM FLANGE LENGTHS WITH ADJUSTMENTS MADE FOR GIRDER SLOPE.

② REINFORCING STEEL WEIGHT IS CALCULATED USING AN APPROXIMATE FACTOR OF 6.5 LB/SF.

GENERAL NOTES:

1. DESIGNED ACCORDING TO AASHTO LRFD BRIDGE DESIGN SPECIFICATIONS, 4TH EDITION, 2007 AND 2009 CURRENT INTERIMS FOR HL-93 LOADING.
2. SEE IGTS STANDARD FOR THICKENED SLAB END DETAIL AND QUANTITY ADJUSTMENT
3. SEE PCP (C) OR PMDF (C) STANDARDS FOR DETAILS AND QUANTITY ADJUSTMENT IF EITHER OF THESE OPTIONS ARE USED.
4. ALL REINFORCING SHOULD BE GRADE 60.
5. CONCRETE STRENGTH F'C = 4,000 PSI
6. BAR LAPS, WHERE REQUIRED, SHALL BE AS FOLLOWS:
   #4 = 1'-5"
   #5 = 1'-9"
7. SEE MISC. SLAB DETAILS FOR REINFORCING OVER BENTS
8. SPACE BARS U WITH GIRDER BARS R IN ALL AREAS WHERE MEASURED HAUNCH EXCEEDS 3½".
9. FOR ADDITIONAL SLAB DETAILS, HANCH REINFORCEMENT DETAIL, AND REINFORCEMENT OVER INV-T BENTS, SEE TXDOT STANDARD DETAIL SHEET "IGMS (MOD)".
10. FOR DECK DRAIN LOCATION AND REINFORCEMENT DETAILS, SEE BRIDGE LAYOUT SHEETS AND BRIDGE DRAIN DETAIL SHEETS.

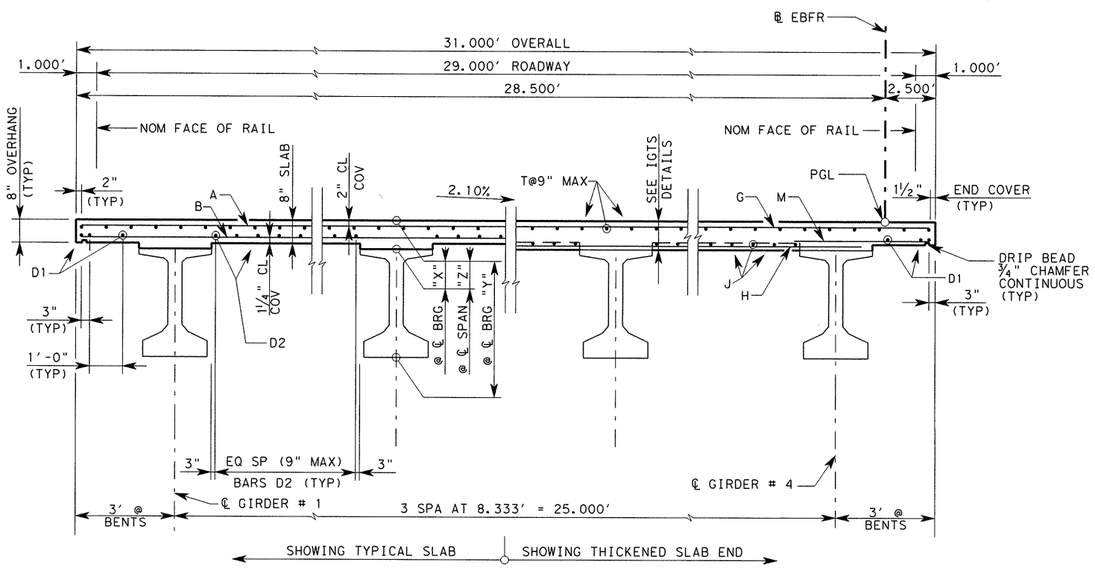

TYPICAL RADIAL SECTION

TABLE OF SECTION DEPTHS			
SPAN #	"X" AT ℄ BRG	"Y" AT ℄ BRG	"Z" AT ℄ SPAN
9-11	10"	5'-4"	9"

SPAN #	GIRDER #	"A"	"B"
9-11	ALL	0.070'	0.098'

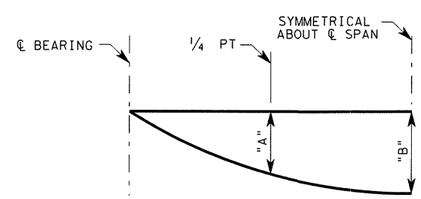

NOTE: DEFLECTIONS SHOWN ARE DUE TO CONCRETE SLAB ONLY. (E_c = 5 x 10^6 PSI) CALCULATED DEFLECTIONS SHOWN ARE THEORETICAL. ACTUAL DIMENSIONS MAY BE LESS. DEFLECTIONS SHALL BE ADJUSTED BASED ON FIELD OBSERVATIONS

DEAD LOAD DEFLECTION DIAGRAM

HL-93 LOADING

STATE OF TEXAS — OSAMA A. SHAHAWY — 88476 — LICENSED PROFESSIONAL ENGINEER

REV. No.	DATE	REVISION	BY
△			
△			
△			

PBSJ an Atkins company TBPE REG. # F-474

Texas Department of Transportation Austin District

©2011 by TxDOT

SH 45 / O'CONNOR DRIVE EB FRONTAGE RD 312.00' PRESTRESS CONC I-GIRDER UNIT (SPANS 9-11)

SCALE: NTS — SHEET 5 OF 6

DESIGNED: RBR	FED. RD DIV. No.	STATE	PROJECT No.			HIGHWAY No.
CHECKED: OAS	6	TEXAS				LP 1/SH 45
DRAWN: RBR	STATE DISTRICT	COUNTY	CONTROL No.	SECTION No.	JOB No.	SHEET No.
CHECKED: OAS	AUSTIN	WILLIAMSON	0683	06	027	375

DATE: 4/11/2011 TIME: 10:35:47 AM
PLOT DRIVER: RD*11x17*PDF.plt
PEN TABLE: plotordr*ocon.tbl
FILE: r:\trans-design\o'connor\cadd\bdg\EBFR\OC45Sebfr05.dgn

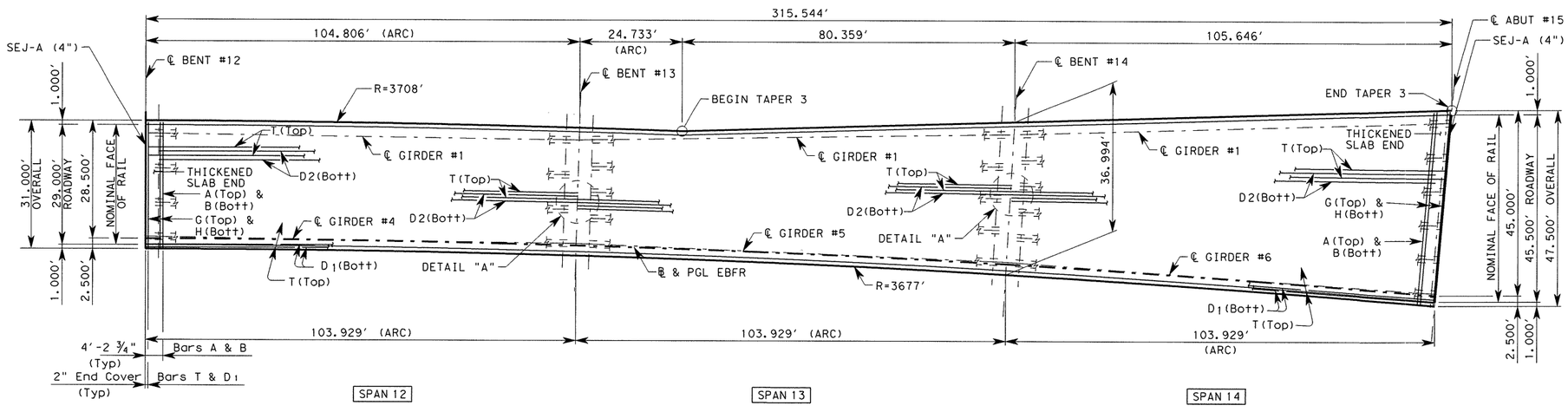

PLAN

TABLE OF ESTIMATED QUANTITIES

SPAN	REINF CONCRETE SLAB	① PRESTR CONCRETE GIRDERS (Tx54)	CLASS "S" CONCRETE	② TOTAL REINF STEEL
	SF	LF	CY	LB
12	3,235	398.1	81	21,028
13	3,551	498.2	89	23,082
14	4,421	612.3	111	28,737
TOTAL	11,207	1,508.6	281	72,847

① LENGTHS SHOWN ARE BOTTOM FLANGE LENGTHS WITH ADJUSTMENTS MADE FOR GIRDER SLOPE.

② REINFORCING STEEL WEIGHT IS CALCULATED USING AN APPROXIMATE FACTOR OF 6.5 LB/SF.

GENERAL NOTES:

1. DESIGNED ACCORDING TO AASHTO LRFD BRIDGE DESIGN SPECIFICATIONS, 4TH EDITION, 2007 AND 2009 CURRENT INTERIMS FOR HL-93 LOADING.
2. SEE IGTS STANDARD FOR THICKENED SLAB END DETAIL AND QUANTITY ADJUSTMENT
3. SEE PCP (C) OR PMDF (C) STANDARDS FOR DETAILS AND QUANTITY ADJUSTMENT IF EITHER OF THESE OPTIONS ARE USED.
4. ALL REINFORCING SHOULD BE GRADE 60.
5. CONCRETE STRENGTH F'C = 4,000 PSI
6. BAR LAPS, WHERE REQUIRED, SHALL BE AS FOLLOWS:
   #4 = 1'-5"
   #5 = 1'-9"
7. SEE MISC. SLAB DETAILS FOR REINFORCING OVER BENTS.
8. SPACE BARS U WITH GIRDER BARS R IN ALL AREAS WHERE MEASURED HAUNCH EXCEEDS 3½".
9. FOR ADDITIONAL SLAB DETAILS, HANCH REINFORCEMENT DETAIL, AND REINFORCEMENT OVER INV-T BENTS, SEE TXDOT STANDARD DETAIL SHEET "IGMS (MOD)".
10. FOR DECK DRAIN LOCATION AND REINFORCEMENT DETAILS, SEE BRIDGE LAYOUT SHEETS AND BRIDGE DRAIN DETAIL SHEETS.

BAR TABLE

BAR	SIZE
A	#5
B	#5
D	#5
G	#5
H	#5
J	#5
M	#5
T	#4
U	#4

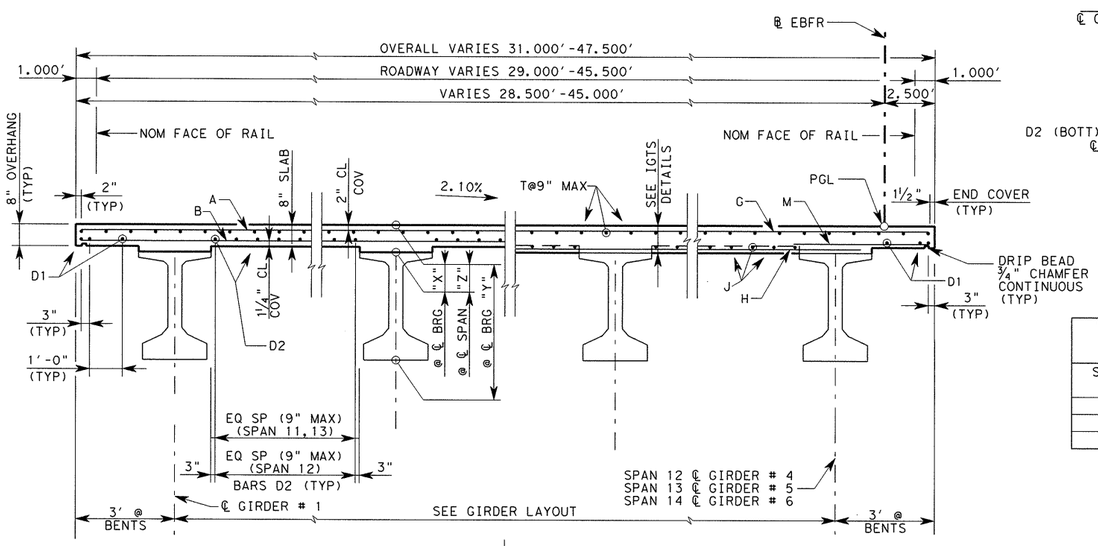

TYPICAL RADIAL SECTION

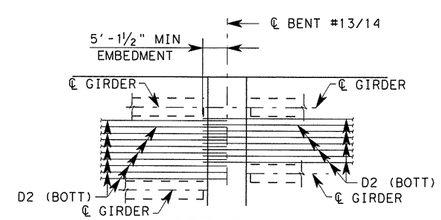

DETAIL A

TABLE OF SECTION DEPTHS

SPAN #	"X" AT ℄ BRG	"Y" AT ℄ BRG	"Z" AT ℄ SPAN
12	10¼"	5'-4¼"	9"
13	11"	5'-5"	9"
14	11¼"	5'-5¼"	9"

SPAN #	GIRDER #	"A"	"B"
12	ALL	0.070'	0.098'
13	ALL	0.059'	0.083'
14	ALL	0.061'	0.086'

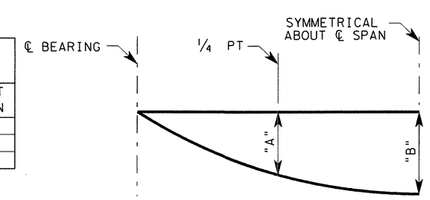

NOTE: DEFLECTIONS SHOWN ARE DUE TO CONCRETE SLAB ONLY. ($E_c = 5 \times 10^6$ PSI) CALCULATED DEFLECTIONS SHOWN ARE THEORETICAL. ACTUAL DIMENSIONS MAY BE LESS. DEFLECTIONS SHALL BE ADJUSTED BASED ON FIELD OBSERVATIONS

DEAD LOAD DEFLECTION DIAGRAM

HL-93 LOADING

STATE OF TEXAS — OSAMA A. SHAHAWY — 88476 — LICENSED PROFESSIONAL ENGINEER — 4/11/11

REV. NO.	DATE	REVISION	BY
△			
△			
△			

PBSJ an Atkins company TBPE REG. # F-474

Texas Department of Transportation — Austin District

©2011 by TxDOT

SH 45 / O'CONNOR DRIVE EB FRONTAGE RD 312.00' PRESTRESS CONC I-GIRDER UNIT (SPANS 12-14)

SCALE: NTS — SHEET 6 OF 6

DESIGNED: RBR	FED. RD DIV. No.	STATE	PROJECT No.			HIGHWAY No.
CHECKED: OAS	6	TEXAS				LP 1/SH 45
DRAWN: RBR	STATE DISTRICT	COUNTY	CONTROL No.	SECTION No.	JOB No.	SHEET No.
CHECKED: OAS	AUSTIN	WILLIAMSON	0683	06	027	376

TIME: 10:35:49 AM
DATE: 4/11/2011
PLOT DRIVER: RD*11x17*PDF.plt
PEN TABLE: plotordr*ocon.tbl
FILE: r:\trans-design\o'connor\cadd\bdg\ebfr\OC45GSebfr06.dgn

DESIGNED GIRDERS (DEPRESSED STRANDS) / OPTIONAL DESIGN

STRUCTURE	SPAN NO.	GIRDER NO.	GIRDER TYPE	NON-STD STRAND PATTERN	PRESTRESSING STRANDS: TOTAL NO.	SIZE (in)	STRGTH fpu (ksi)	"e" ℄ (in)	"e" END (in)	DEPRESSED: NO.	DEPRESSED: TO (in)	CONCRETE: RELEASE STRGTH f'ci (ksi)	CONCRETE: MINIMUM 28 DAY COMP STRGTH f'c (ksi)	DESIGN LOAD COMP STRESS (TOP ℄) (SERVICE I) fct(ksi)	DESIGN LOAD TENSILE STRESS (BOTT ℄) (SERVICE III) fcb(ksi)	REQUIRED MINIMUM ULTIMATE MOMENT CAPACITY (STRENGTH I) (ft-kips)	LIVE LOAD DISTRIB FACTOR (1)
EBFR BRIDGE	1	ALL	Tx54		54	1/2	270	18.119	11.897	8	50.5	5.5	5.8	3.562	-3.537	7059.92	0.650
	2	ALL	Tx54		48	1/2	270	18.508	12.508	8	44.5	5	5.4	3.454	-3.371	6637.33	0.620
	3	ALL	Tx54		52	1/2	270	18.239	12.085	8	48.5	5.3	5.7	3.625	-3.623	7172.85	0.655
	4	ALL	Tx54		50	1/2	270	18.368	11.968	8	48.5	5.1	5.5	3.563	-3.506	6933.63	0.646
	5	ALL	Tx54		20	1/2	270	20.408	20.008	4	6.5	4	5	1.501	-1.65	3614.56	0.757
	6	ALL	Tx54		20	1/2	270	20.408	20.008	4	6.5	4	5	1.503	-1.65	3611.01	0.757
	7	ALL	Tx54		20	1/2	270	20.408	20.008	4	6.5	4	5	1.497	-1.647	3611.06	0.756
	8	ALL	Tx54		50	1/2	270	18.368	11.968	8	48.5	5.1	5.5	3.459	-3.545	7141.09	0.673
	9	ALL	Tx54		46	1/2	270	18.66	11.356	8	50.5	4.6	5.2	3.211	-3.291	6645.31	0.683
	10	ALL	Tx54		46	1/2	270	18.66	11.356	8	50.5	4.6	5.2	3.211	-3.291	6645.31	0.683
	11	ALL	Tx54		46	1/2	270	18.66	11.356	8	50.5	4.6	5.2	3.211	-3.291	6645.31	0.683
	12	ALL	Tx54		46	1/2	270	18.66	11.356	8	50.5	4.6	5.2	3.198	-3.279	6621.66	0.684
	13	ALL	Tx54		40	1/2	270	19.108	12.508	6	50.5	4.2	5	3.051	-3.031	6010.23	0.608
	14	ALL	Tx54		44	1/2	270	18.826	11.19	8	50.5	4.4	5	3.204	-3.181	6304.97	0.615

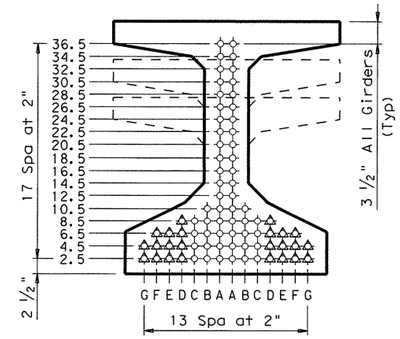

TYPE Tx28, Tx34 & Tx40 (2)

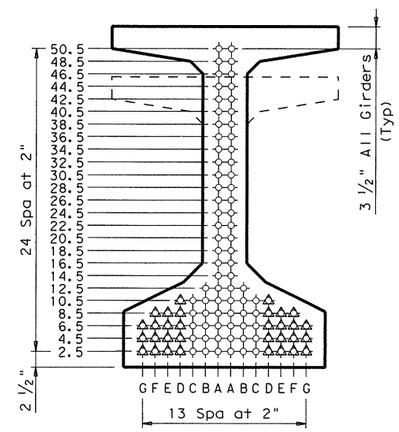

TYPE Tx46 & Tx54 (2)

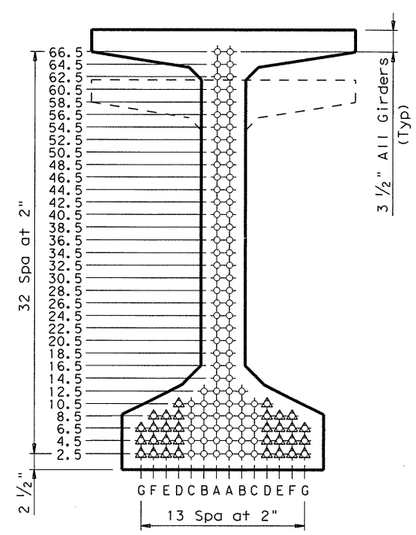

TYPE Tx62 & Tx70 (2)

(1) Portion of full HL93

(2) Full-length debonded strands are only permitted in strand positions marked Δ. Double wrap full-length debonded strands in outermost position of each row. Full-length debonding must comply with Item 426.4.F.4.

NON-STANDARD STRAND PATTERNS

PATTERN	STRAND ARRANGEMENT AT ℄ OF GIRDER

GENERAL NOTES:

Designed in accordance with AASHTO LRFD Specifications.

All concrete must be Class H. Provide Class H(HPC) if shown elsewhere in plans. All reinforcing bars must be Grade 60.

When shown on this sheet, the Fabricator has the option of furnishing either the designed depressed strand girder or an approved optional design. All optional design submittals must be signed, sealed and dated by a registered Professional Engineer.

Optional designs for girders 120 feet or longer must have a calculated residual camber equal to or greater than that of the designed girder.

Prestress losses for the designed girders have been calculated for a relative humidity of 65 percent. Optional designs must likewise conform.

For depressed strand designed girders, strands must be located as low as possible on the 2" grid system unless a Non-Standard Strand Pattern is indicated. Fill row "2.5", then row "4.5", then row "6.5", etc., beginning each row in the "A" position and working outward until the required number of strands is reached. All strands in the "A" position must be depressed, maintaining the 2" spacing so that, at the girder ends, the upper two strands are in the position shown in the table.

Strands for the designed girder must be low relaxation strands pretensioned to 75 percent of fpu each.

Seal cracks in girder ends exceeding 0.005" in width as directed by the Engineer. The fabricator is permitted to decrease the spacing of Bars R and S by providing additional bars to help limit crack width provided the decreased spacing results in no less than 1" clear between bars. The fabricator must take an approved corrective action if cracks greater than 0.005" form on a repetitive basis.

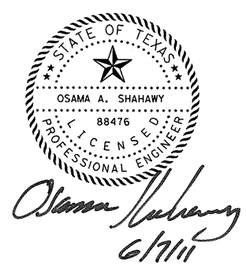

HL93 LOADING

Texas Department of Transportation
Bridge Division

PRESTRESSED CONCRETE I-GIRDER DESIGNS (NON-STANDARD SPANS)

IGND

FILE: igndstel.dgn	DN: TxDOT	CK: TxDOT	DW: TxDOT	CK: TxDOT
©TxDOT June 2007	DISTRICT	FEDERAL AID PROJECT		SHEET
REVISIONS 02/09: General Notes. 10/09: General Notes.	AUSTIN			377
	COUNTY		CONTROL-SECT-JOB	HIGHWAY
	WILLIAMSON		0683-06-027	IH 35 LOOP 1

Rev. 6/29/11

DISCLAIMER:
The use of this standard is governed by the "Texas Engineering Practice Act". No warranty of any kind is made by TxDOT for any purpose whatsoever. TxDOT assumes no responsibility for the conversion of this standard to other formats or for incorrect results or damages resulting from its use.

LEVELS DISPLAYED

	1	2	3	4	5	6	7	8	9	10	11	12	13	14	15	16
17	8	19	20	21	22	23	24	25	26	27	28	29	30	31	32	
33	34	35	36	37	38	39	40	41	42	43	44	45	46	47	48	
49	50	51	52	53	54	55	56	57	58	59	60	61	62	63		

ACC:

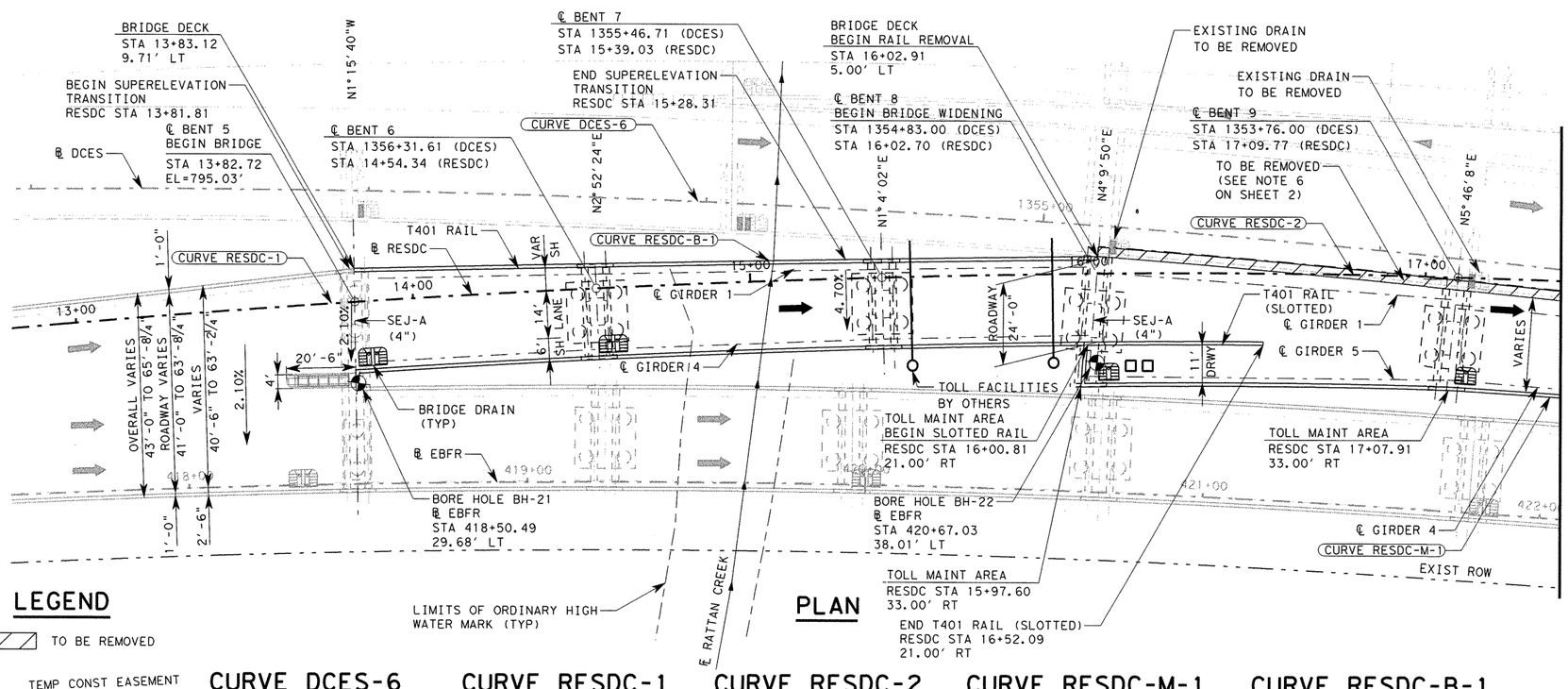

PLAN

LEGEND

TO BE REMOVED

TEMP CONST EASEMENT

GENERAL NOTES:

FOR GENERAL NOTES AND CROSS SLOPE SUPER TRANS TABLE, SEE SHEET 2 OF 2.

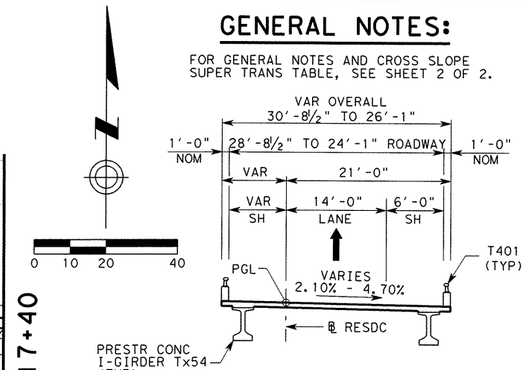

TYPICAL SECTION

(SPAN 5-7) NTS

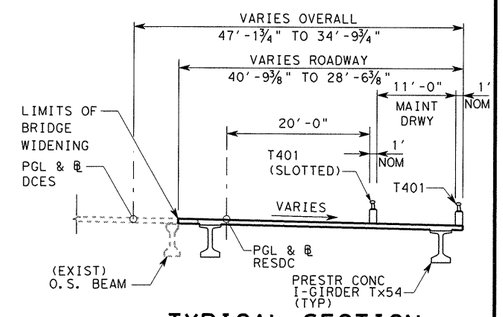

TYPICAL SECTION

(SPAN 8-9) NTS

HYDRAULIC DATA		
		100 YR
Q	CFS	7857
V	FT/SEC	0.65

CURVE DCES-6

PI STA 1352+62.95
N 10,149,121.3767
E 3,121,722.6509
Δ = 24°08'48" (LT)
T = 817.02'
L = 1,609.79'
R = 3,819.72'
PC STA 1344+45.93
PT STA 1360+55.72

CURVE RESDC-1

PI STA 13+01.88
N 10,149,041.3499
E 3,121,177.3782
Δ = 8°20'46" (RT)
T = 301.88'
L = 602.70'
R = 4,137.55'
PC STA 10+00.00
PT STA 16+02.70

CURVE RESDC-2

PI STA 19+26.25
N 10,149,050.2881
E 3,121,802.7499
Δ = 14°36'46" (RT)
T = 323.55'
L = 643.59'
R = 2,523.48'
PC STA 16+02.70
PT STA 22+46.29

CURVE RESDC-M-1

PI STA 100+53.83
N 10,149,008.4818
E 3,121,637.2405
Δ = 1°39'37" (RT)
T = 53.83'
L = 107.65'
R = 3,714.98'
PC STA 100+00.00
PT STA 101+07.65

CURVE RESDC-B-1

PI STA 201+10.11
N 10,149,049.1026
E 3,121,369.2792
Δ = 0°35'45" (RT)
T = 110.11'
L = 220.21'
R = 21,180.27'
PC STA 200+00.00
PT STA 202+20.21

DESIGN SPEED: 50 MPH
ADT: 10,700 (2040)
RFC:
URBAN - RAMP
NBI: 14-246-0-0683-06-484

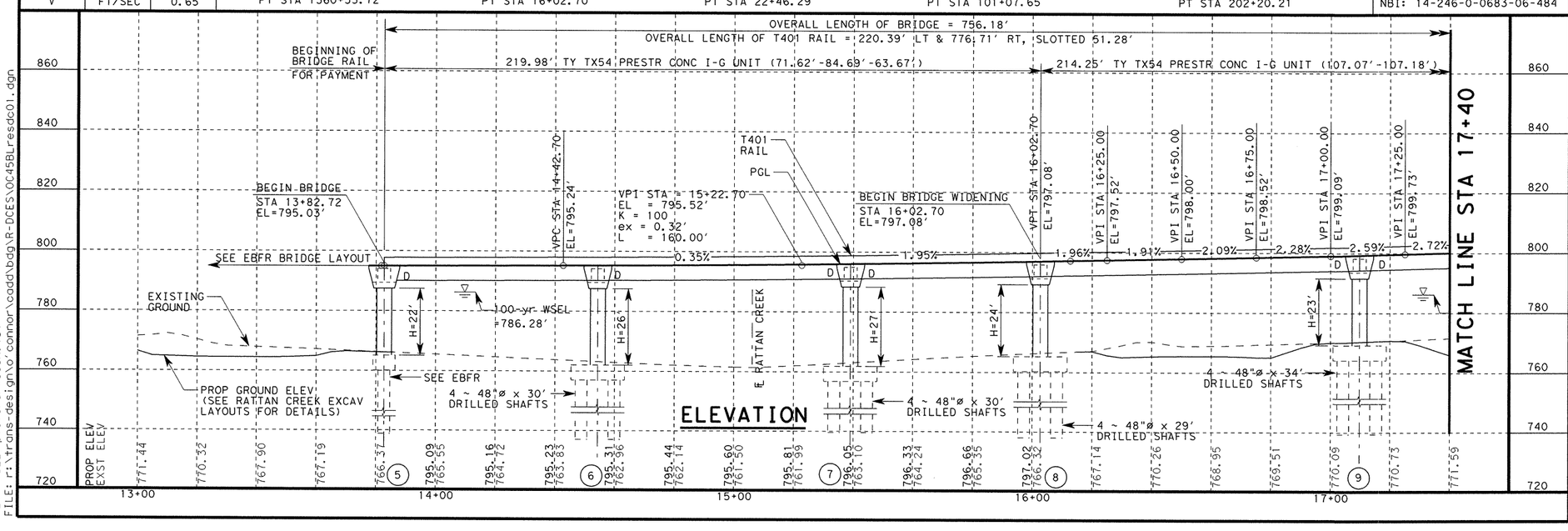

ELEVATION

HL-93 LOADING

STATE OF TEXAS
OSAMA A. SHAHAWY
88476
LICENSED PROFESSIONAL ENGINEER
4/11/11

REV. No.	DATE	REVISION	BY
△			
△			
△			

PBSJ an Atkins company TBPE REG. # F-474

Texas Department of Transportation
Austin District
©2011 by TxDOT

SH 45 / O'CONNOR DRIVE RAMP EAST-SOUTH DC BRIDGE LAYOUT

SCALE: 1"=40'H, 1"=40'V SHEET 1 OF 2

DESIGNED: RBR	FED. RD DIV. No.	STATE	PROJECT No.		HIGHWAY No.
CHECKED: OAS	6	TEXAS			LP 1/SH 45

DRAWN: RBR	STATE DISTRICT	COUNTY	CONTROL No.	SECTION No.	JOB No.	SHEET No.
CHECKED: OAS	AUSTIN	WILLIAMSON	0683	06	027	378

PLOT DRIVER: RD*11x17*PDF.plt
PEN TABLE: plotordr*ocon.tbl
FILE: r:\trans-design\o'connor\cadd\bdg\R-DCES\0C45BLresdc01.dgn
DATE: 4/11/2011 TIME: 10:35:54 AM

DATE: 6/2/2011 TIME: 1:56:13 PM

CROSS SLOPE SUPER TRANS

STATION	SUPERELEVATION ①
13+81.81	-2.10%
15+28.31	-4.70%
16+02.70	-4.70%
17+09.77	-3.73%
18+16.95	-2.92%
19+24.21	-2.86%
20+31.54	-2.93%
21+38.90	-2.90%

(-) INDICATES SLOPE DOWNWARD TO THE RIGHT

① CROSS SLOPE SUPERELEVATION CALCULATED PERPENDICULAR TO THE LOCAL TANGENT OF ℄ DCES AT THE INTERSECTION OF THE ℄ BENT AND ℄ RESDC.

GENERAL NOTES:

1. DESIGNED ACCORDING TO AASHTO LRFD BRIDGE DESIGN SPECIFICATIONS, 4TH EDITION, 2007 AND CURRENT INTERIM'S FOR HL-93 LOADING.
2. FOR BORING LOGS, SEE "BORING LOGS" SHEETS.
3. DRILLED SHAFTS ARE DESIGNED WITH POINT BEARING AND SKIN FRICTION TO BE FOUNDED AT ELEVATIONS SHOWN OR LOWER AS NECESSARY TO PENETRATE A MINIMUM OF TWO SHAFT DIAMETER INTO UNWEATHERED LIMESTONE.
4. "H" - HEIGHTS SHOWN ARE APPROXIMATE. ACTUAL COLUMN HEIGHT SHALL BE FIELD VERIFIED PRIOR TO CONSTRUCTION.
5. CONTRACTOR TO USE CASING FOR DRILLED SHAFT. ALL SHAFT CASING SHALL REMAIN IN PLACE AFTER CASTING.
6. CONTRACTOR SHALL BREAKBACK HATCHED PORTION OF EXISTING SLAB TO BREAKBACK LINE AND REMOVE ALL OVERLAPPING EXISTING DRAIN, STRAIGHTEN AND EXTEND EXISTING REINFORCEMENT INTO NEW CONSTRUCTION.
7. NEW SLAB SHALL MATCH EXISTING SLAB PROFILE AT CONSTRUCTION JOINTS WITH ADJUSTMENTS FOR CROSS-SLOPE.
8. FOR CRASH CUSHION AND ATTACHMENT DETAILS, SEE TXDOT STANDARD SHEET "QUAD (N)-10".
9. FURNISH AND INSTALL 2 - 2" DIA. PVC CONDUITS IN EACH BRIDGE RAIL.
10. FOR INFO ON EXISTING CONCRETE DUCT BANK TO BE ABANDONED SEE TRAFFIC MANAGEMENT SYSTEM LAYOUT SHEETS.

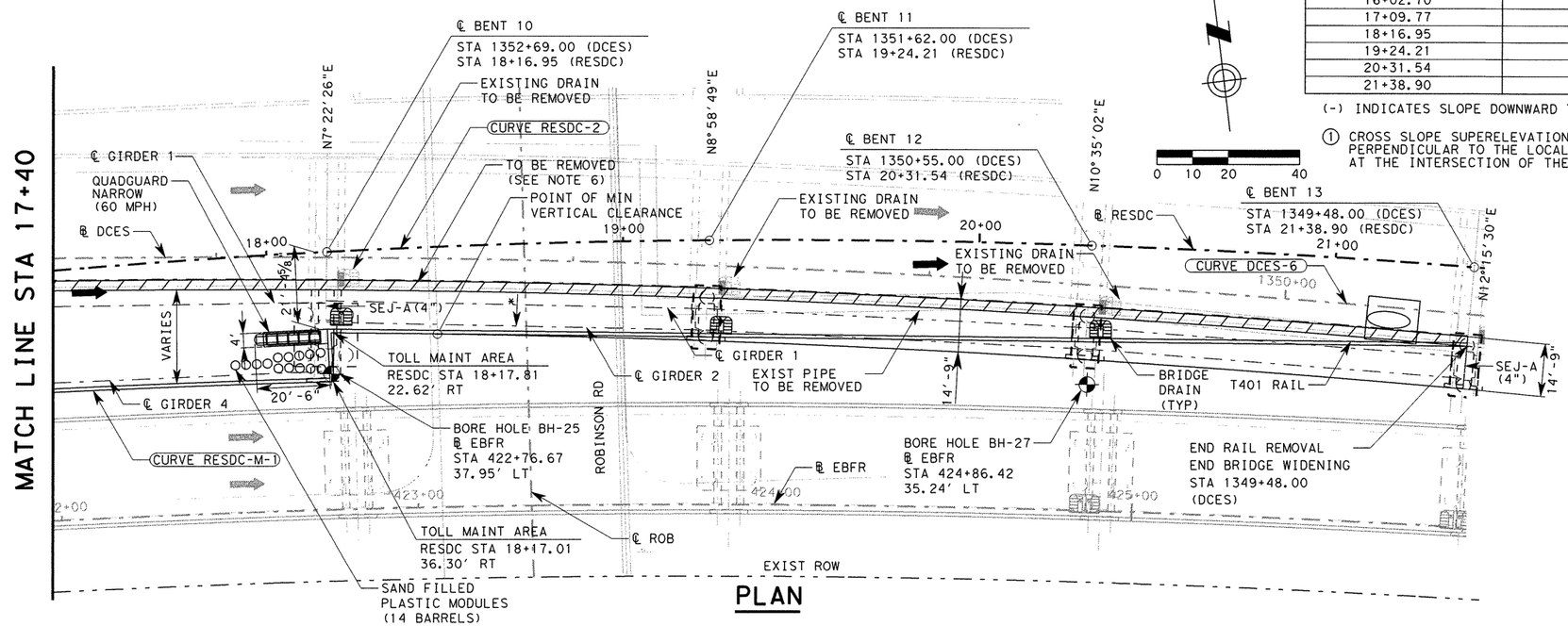

PLAN

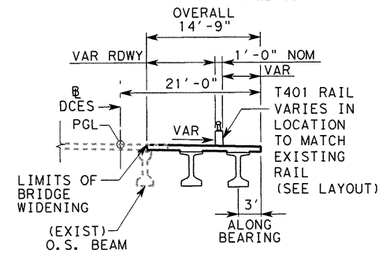

TYPICAL SECTION

(SPANS 10-12) NTS

* MATCH EXISTING BRIDGE SLOPE
SEE CROSS SLOPE SUPER TRANS TABLE

LEGEND

TO BE REMOVED

TEMP CONST EASEMENT

HYDRAULIC DATA		
		100 YR
Q	CFS	7857
V	FT/SEC	0.65

CURVE DCES-6

PI STA 1352+62.95
N 10,149,121.3767
E 3,121,722.6509
Δ = 24°08'48" (LT)
T = 817.02'
L = 1,609.79'
R = 3,819.72'
PC STA 1344+45.93
PT STA 1360+55.72

CURVE RESDC-2

PI STA 19+26.25
N 10,149,050.2881
E 3,121,802.7499
Δ = 14°36'46" (RT)
T = 323.55'
L = 643.59'
R = 2,523.48'
PC STA 16+02.70
PT STA 22+46.29

CURVE RESDC-M-1

PI STA 100+53.83
N 10,149,008.4818
E 3,121,637.2405
Δ = 1°39'37" (RT)
T = 53.83'
L = 107.65'
R = 3,714.98'
PC STA 100+00.00
PT STA 101+07.65

DESIGN SPEED: 50 MPH
ADT: 10,700 (2040)
RFC:
URBAN - RAMP
NBI: 14-246-0-0683-06-484

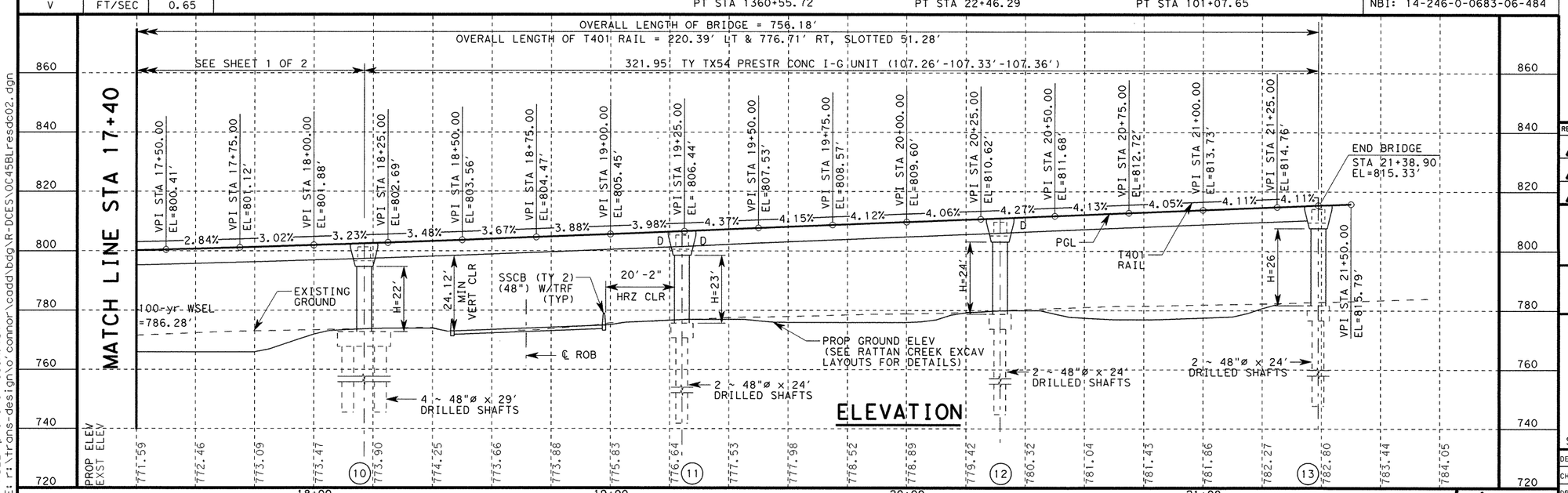

ELEVATION

HL-93 LOADING

STATE OF TEXAS
OSAMA A. SHAHAWY
88476
LICENSED PROFESSIONAL ENGINEER
6/7/11

REV. No.	DATE	REVISION	BY
△			
△			
△			

PBSJ an Atkins company TBPE REG. # F-474

Texas Department of Transportation Austin District
©2011 by TxDOT

SH 45 / O'CONNOR DRIVE RAMP EAST-SOUTH DC BRIDGE LAYOUT

SCALE: 1"=40'H, 1"=40'V SHEET 2 OF 2

DESIGNED: RBR	FED. RD DIV. No.	STATE	PROJECT No.		HIGHWAY No.	
CHECKED: OAS	6	TEXAS			LP 1/SH 45	
DRAWN: RBR	STATE DISTRICT	COUNTY	CONTROL No.	SECTION No.	JOB No.	SHEET No.
CHECKED: OAS	AUSTIN	WILLIAMSON	0683	06	027	379

Rev. 6/29/11

PLOT DRIVER: RD*11x17*PDF.pltr
PEN TABLE: plotordr*ocon.tbl
FILE: r:\trans-design\o'connor\cadd\bdg\R-DCES\OC45BLresdc02.dgn

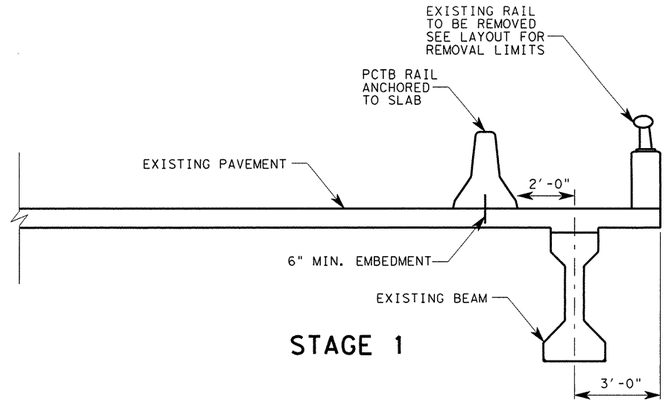

STAGE 1

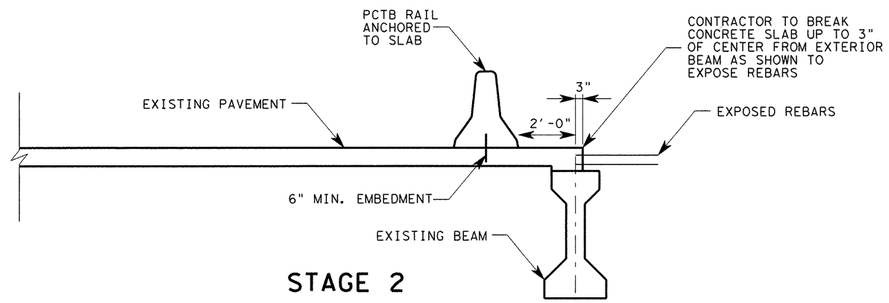

STAGE 2

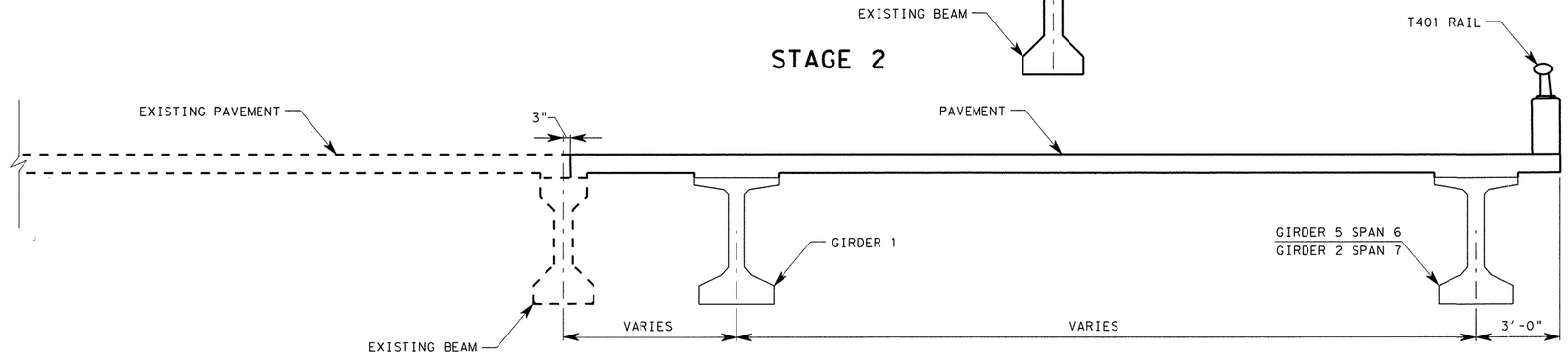

(SPAN 6 & 7)

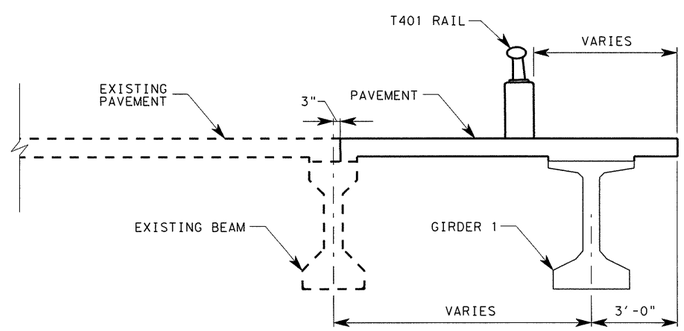

(SPAN 8 & 9)
LIMITS OF BRIDGE WIDENING
STA 14+58.86 TO STA 18+90.05

STAGE 3

HL-93
LOADING

STATE OF TEXAS
OSAMA A. SHAHAWY
88476
LICENSED
PROFESSIONAL ENGINEER
4/11/11

REV. No.	DATE	REVISION	BY
△			
△			
△			

PBSJ
an Atkins company
TBPE REG. # F-474

Texas Department of Transportation
Austin District
©2011 by TxDOT

SH 45 / O'CONNOR DRIVE RAMP EAST-SOUTH DC TYPICAL SECTION CONSTRUCTION STAGING

SCALE: NTS
SHEET 1 OF 1

DESIGNED: RBR	FED. RD DIV. No.	STATE	PROJECT No.			HIGHWAY No.
CHECKED: OAS	6	TEXAS				LP 1/SH 45
DRAWN: RBR	STATE DISTRICT	COUNTY	CONTROL No.	SECTION No.	JOB No.	SHEET No.
CHECKED: OAS	AUSTIN	WILLIAMSON	0683	06	027	380

DATE: 4/11/2011 TIME: 10:36:00 AM
PLOT DRIVER: RD*11x17*PDF.plt
PEN TABLE: plotordr*ocon.tbl
FILE: r:\trans-design\o'connor\cadd\bdg\R-DCES\OC45CSresdc.dgn

SUMMARY OF BRIDGE QUANTITIES

ITEM NO.	400	403	416	416	420	420	422	425	428	450	450	454	471	481	618
DESC. CODE	2001	2001	2006	2079	2017	2018	2003	2068	2001	2063	2065	2001	2003	2012	2018
DESCRIPTION	STRUCT EXCAV	TEMPORARY SPL SHORING	DRILL SHAFT (48 IN)	DRILLED SHAFT CASINGS (48 IN.)	CL C CONC (BENT) (MASS)	CL C CONC (FOOTING) (MASS)	REINF CONC SLAB (HPC) (CL S)	PRESTR CONC GIRDER (TX54)	CONC SURF TREAT (CLASS I)	RAIL TYPE (TY T401)	RAILING T401(MOD)	SEALED EXPANSION JOINT (4 IN)	GRATE & FRAME	PVC PIPE (SCH 40) (6 IN)	CONDUIT (PVC) (SCH 40) (2 IN)
	CY	SF	LF	LF	CY	CY	SF	LF	SY	LF	LF	LF	EA	LF	LF
8 - INTERIOR BENTS	561.0	3423.0	832	100	597.5	365.7									
1 - 219.98' PRESTR. CONC. I-G SPAN							6045.0	818.7	688	438		55	2.0	60.0	877
1 - 214.25' PRESTR. CONC. I-G SPAN							7111.0	914.2	798	212	51.3	14	2.0	65.0	425
1 - 321.95' PRESTR. CONC. I-G UNIT							4718.0	606.8	538	347		14	3.0	96.0	693
TOTALS	561.0	3423.0	832.0	100	597.5	365.7	17874.0	2339.7	2024	997	51.3	83	7.0	221.0	1995

BEARING SEAT ELEVATIONS

		Beam 1	Beam 2	Beam 3	Beam 4	Beam 5
Bent 5	FWD	789.477	789.299	789.121	788.945	
		Beam 1	Beam 2	Beam 3	Beam 4	
Bent 6	BK	789.723	789.471	789.218	788.966	
	FWD	789.606	789.347	789.088	788.829	
		Beam 1	Beam 2	Beam 3	Beam 4	
Bent 7	BK	790.282	789.954	789.626	789.298	
	FWD	790.464	790.138	789.812	789.486	
		Beam 1	Beam 2	Beam 3	Beam 4	Beam 5
Bent 8	BK	791.366	791.041	790.716	790.390	
	FWD	791.335	790.970	790.603	790.236	789.867
		Beam 1	Beam 2	Beam 3	Beam 4	Beam 5
Bent 9	BK	793.197	792.962	792.726	792.490	792.253
	FWD	793.311	793.024	792.737	792.450	
		Beam 1	Beam 2	Beam 3	Beam 4	
Bent 10	BK	796.096	795.892	795.687	795.483	
	FWD	793.578	793.391			
		Beam 1	Beam 2			
Bent 11	BK	797.119	796.935			
	FWD	797.500	797.317			
		Beam 1	Beam 2			
Bent 12	BK	801.595	801.411			
	FWD	801.838	801.654			
		Beam 1	Beam 2			
Bent 13	BK	805.941	805.762			

STATE OF TEXAS
OSAMA A. SHAHAWY
88476
LICENSED PROFESSIONAL ENGINEER
6/21/11

HL-93
LOADING

REV. No.	DATE	REVISION	BY
△			
△			
△			

PBSJ
an Atkins company TBPE REG. # F-474

Texas Department of Transportation
Austin District
©2011 by TxDOT

SH 45 / O'CONNOR DRIVE
RAMP EAST-SOUTH DC
ESTIMATED QUANTITIES
AND
BEARING SEAT ELEVATIONS

SHEET 1 OF 1

DESIGNED: RBR	FED. RD DIV. No.	STATE	PROJECT No.			HIGHWAY No.
CHECKED: OAS	6	TEXAS				LP 1/SH 45
DRAWN: RBR	STATE DISTRICT	COUNTY	CONTROL No.	SECTION No.	JOB No.	SHEET No.
CHECKED: OAS	AUSTIN	WILLIAMSON	0683	06	027	381

Rev. 6/29/11

DATE: 6/21/2011 TIME: 10:23:40 AM
PLOT DRIVER: RD*11x17*PDF.plt
PEN TABLE: plotordr.tbl
FILE: R:\Trans-Design\O'Connor\CADD\BDG\R-DCES\0C45BOresdc.dgn

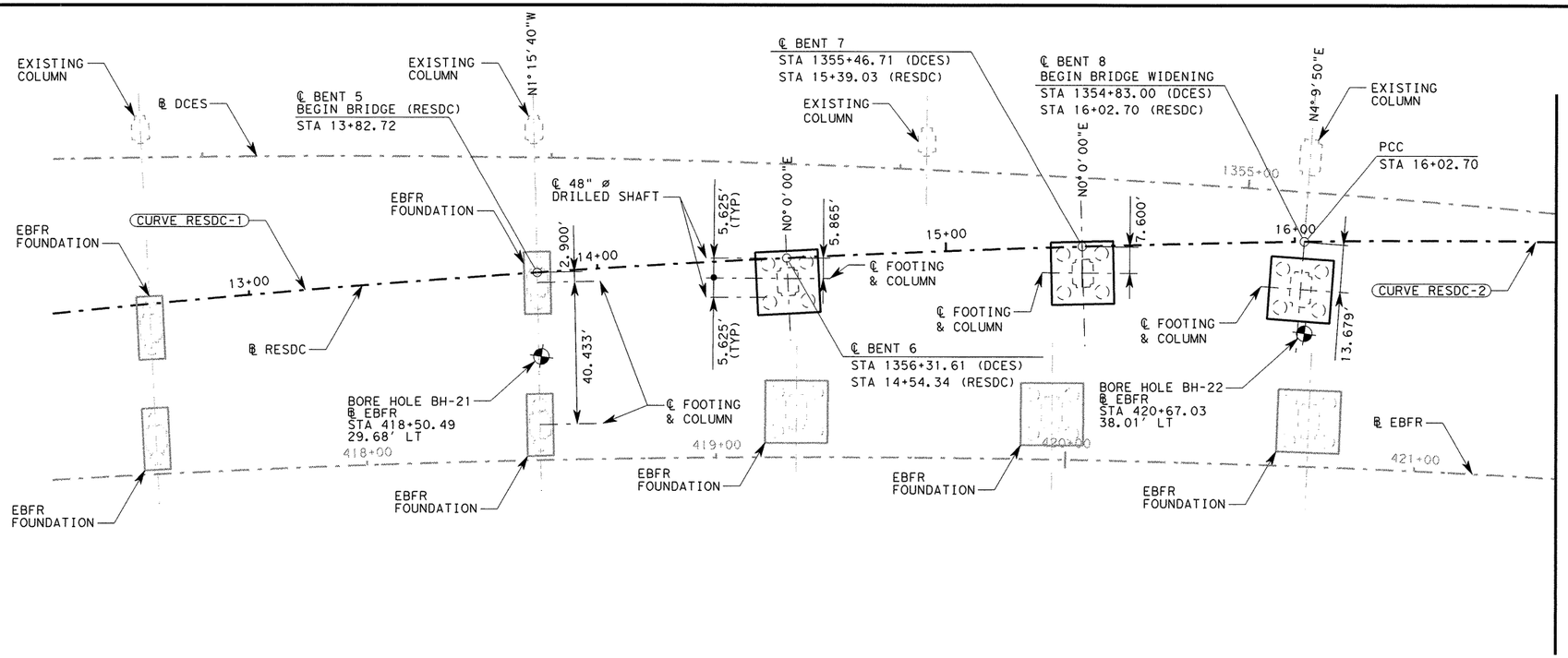

GENERAL NOTES:

1. FOR LENGTH OF DRILLED SHAFTS, SEE BRIDGE LAYOUTS.
2. FOR DRILL SHAFT LOADS AND DETAILS, SEE FOUNDATION DETAILS, EXCEPT FOR ABUTMENTS.
3. ALL BENTS ARE RADIAL TO CONTROL UNLESS OTHERWISE NOTED.
4. ALL DRILLED SHAFTS ARE 48" DIAMETER UNLESS OTHERWISE NOTED.
5. THE DRILLED SHAFT 28 DAY CONCRETE STRENGTH SHALL BE 3600 PSI
6. AFTER SHAFTS ARE DRILLED TO THE PLAN DEPTH, THE SHAFTS SHOULD BE PROBED TO A DEPTH OF 1.5 TIMES THE SHAFT DIAMETER OR TO A DEPTH OF 5 FT, WHICHEVER IS GREATER. IF VOIDS, EITHER OPEN OR CLAY-FILLED, ARE ENCOUNTERED, THE SHAFTS SHOULD BE ADVANCED BELOW THE VOID(S) AND RE-PROBED. CONTINUE PROBING AND ADVANCING UNTIL NO VOIDS ARE ENCOUNTERED WITHIN A DEPTH OF 1.5 DIAMETERS BELOW THE SHAFT BOTTOM.
7. WHEN SLOUGHING AND/OR GROUNDWATER SEEPAGE ARE ENCOUNTERED DURING DRILLED SHAFT INSTALLATION (I.E. SPOILS ARE RECORDED FROM THE DRILLING OPERATIONS) THE CONTRACTOR SHALL INSTALL PERMANENT CASING AS DIRECTED BY THE ENGINEER TO EXCLUDE THE GROUND WATER.

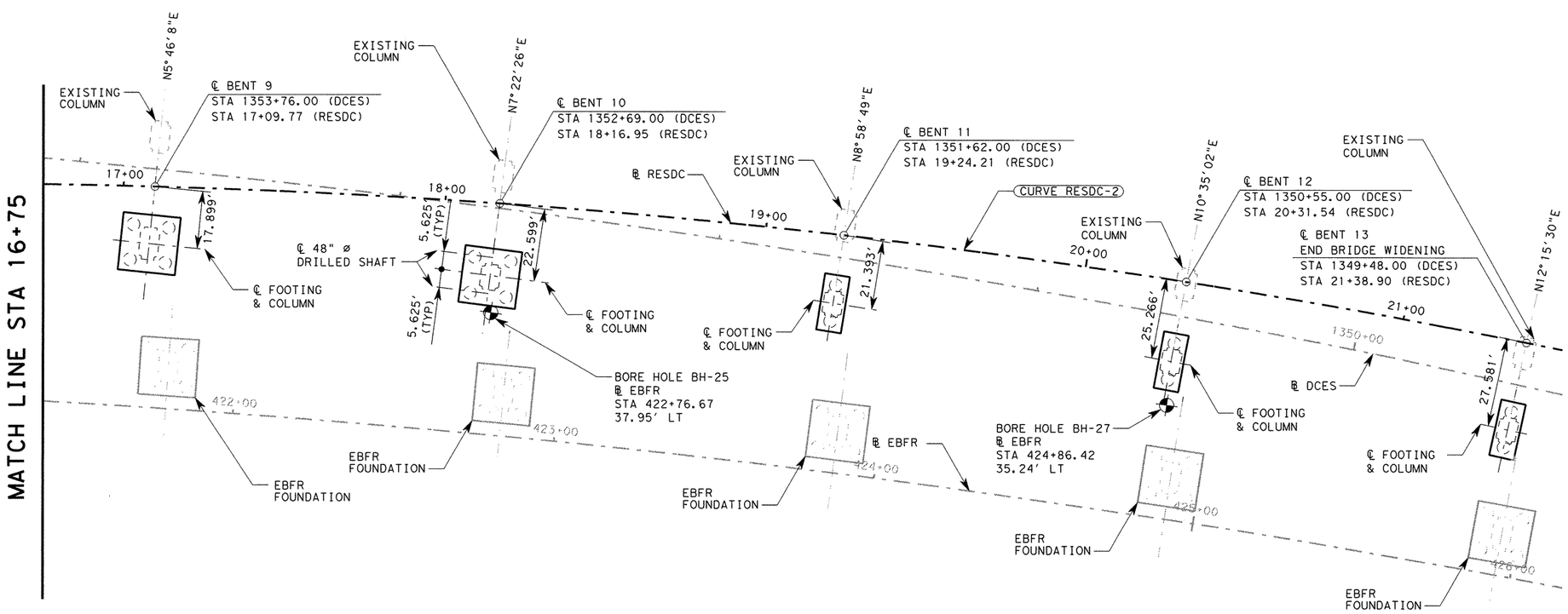

HL-93 LOADING

STATE OF TEXAS
OSAMA A. SHAHAWY
88476
LICENSED PROFESSIONAL ENGINEER
6/7/11

REV. No.	DATE	REVISION	BY
△			
△			
△			

PBSJ an Atkins company TBPE REG. # F-474

Texas Department of Transportation Austin District

©2011 by TxDOT

SH 45 / O'CONNOR DRIVE RAMP EAST-SOUTH DC FOUNDATION LAYOUT

SCALE: 1"=40' SHEET 1 OF 1

DESIGNED: RBR	FED. RD DIV. No.	STATE	PROJECT No.			HIGHWAY No.
CHECKED: OAS	6	TEXAS				LP 1/SH 45
DRAWN: RBR	STATE DISTRICT	COUNTY	CONTROL No.	SECTION No.	JOB No.	SHEET No.
CHECKED: OAS	AUSTIN	WILLIAMSON	0683	06	027	382

Rev. 6/28/11

TIME: 1:56:18 PM
DATE: 6/2/2011

PLOT DRIVER: RD*11x17*PDF.plt
PEN TABLE: plotordr*ocon.tbl
FILE: r:\trans-design\o'connor\cadd\bdg\R-DCES\OC45FLresdc.dgn

DATE: 6/2/2011 TIME: 1:56:20 PM

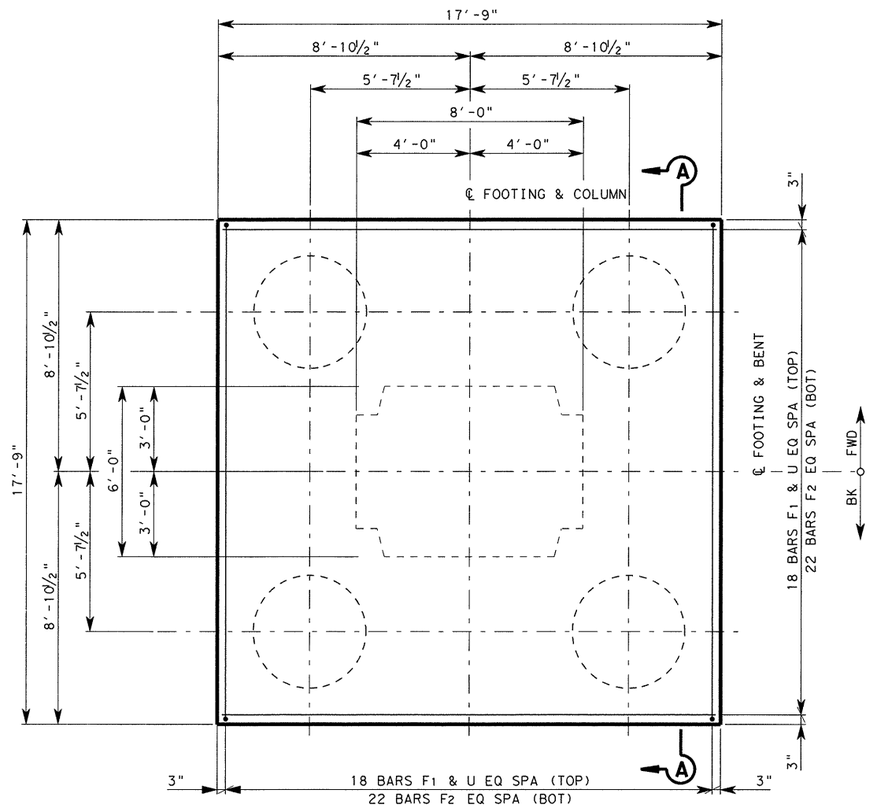

PLAN

ESTIMATED QUANTITES					
BENT NO	CLASS "C" (MASS) CONC (FOOTING) (CY)	STRUCT EXCAV (CY)	TEMP SPCL SHORING (SF)	DRILL SHAFT (48"*) (LF)	CALCULATED DRILL SHAFT LOAD (EACH) (TONS)
6	58.3	87	474	120	504
7	58.3	87	474	116	378
10	58.3	87	474	116	379

BILL OF REINFORCING STEEL (TYP EACH FOOTING)				
BAR	NO.	SIZE	LENGTH	WEIGHT
F1	36	#8	17'-3"	1,658
F2	44	#11	17'-3"	4,033
FD	48	#11	15'-5"	3,932
T	16	#10	17'-3"	1,188
U	96	#6	4'-1"	589
REINFORCING STEEL *			LB	11,399

* FOR CONTRACTOR'S INFORMATION ONLY

NOTES:

1. DESIGNED ACCORDING TO AASHTO LRFD BRIDGE SPECIFICATIONS, 4TH EDITION 2007 AND 2009 CURRENT INTERIM'S FOR HL-93 LOADING.
2. ALL DIMENSIONS TO THE REINFORCING STEEL ARE TO THE ℄ OF THE BAR UNLESS OTHERWISE NOTED.
3. SEE "FOUNDATION LAYOUT" FOR FOUNDATION LOCATION AND ORIENTATION.
4. SEE CORRESPONDING BENT SHEET FOR PLACEMENT OF BARS FD TO MATCH COLUMN REINFORCING.
5. SPECIAL SHORING SHALL BE USED AS NOTED WITH THE ABILITY TO POUR AGAINST EARTH. CONTRACTOR SHALL MAINTAIN 3" MINIMUM CLEAR COVER.

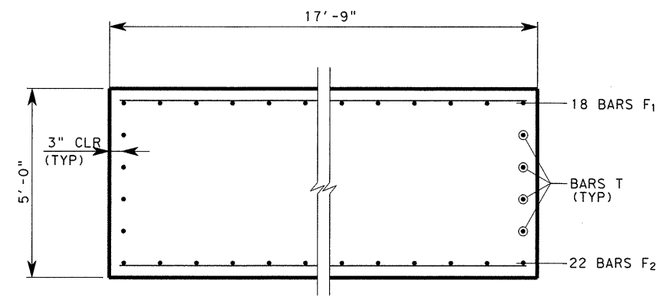

SECTION A-A

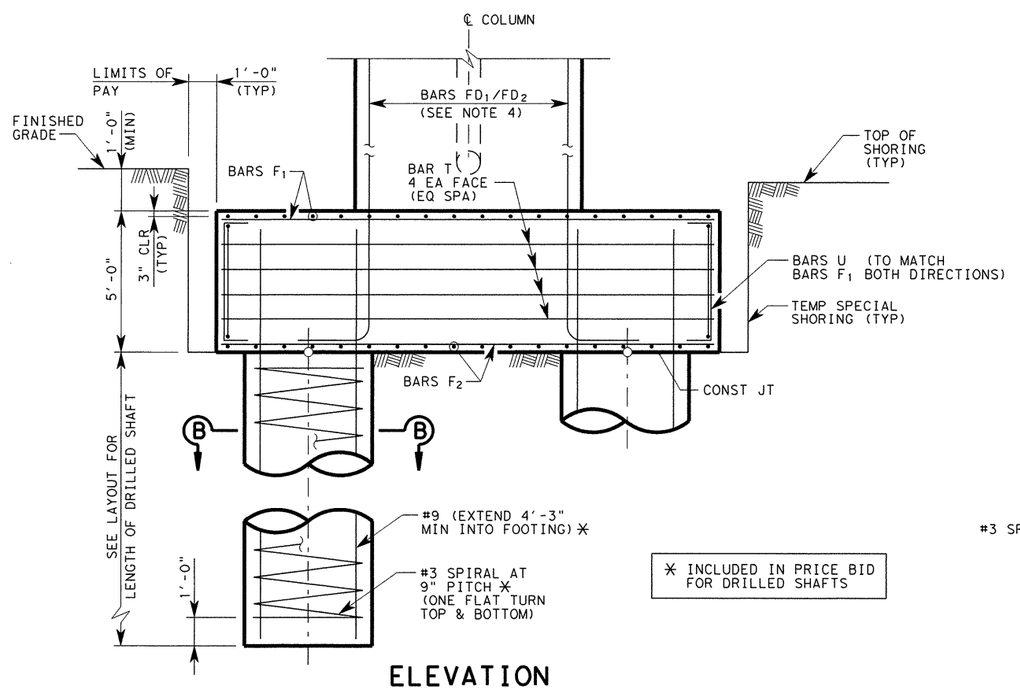

✳ INCLUDED IN PRICE BID FOR DRILLED SHAFTS

ELEVATION

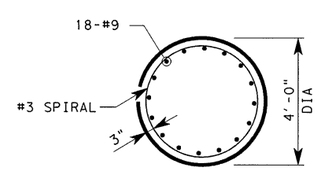

SECTION B-B

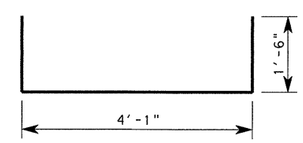

BARS U

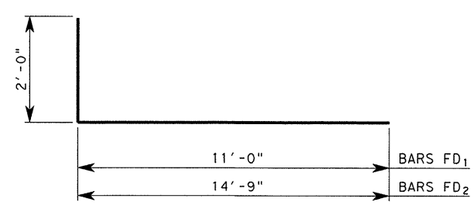

BARS FD

HL-93 LOADING

STATE OF TEXAS
OSAMA A. SHAHAWY
88476
LICENSED
PROFESSIONAL ENGINEER
6/7/11

REV. No.	DATE	REVISION	BY
△			
△			
△			

PBSJ an Atkins company TBPE REG. # F-474

Texas Department of Transportation Austin District
©2011 by TxDOT

SH 45 / O'CONNOR DRIVE RAMP EAST-SOUTH DC FOUNDATION DETAILS BENTS 6, 7 & 10

SCALE: NTS SHEET 1 OF 3

DESIGNED: RBR	FED. RD DIV. No.	STATE	PROJECT No.			HIGHWAY No.	
CHECKED: OAS	6	TEXAS				LP 1/SH 45	
DRAWN: RBR	STATE DISTRICT	COUNTY	CONTROL No.	SECTION No.	JOB No.	SHEET No.	
CHECKED: OAS	AUSTIN	WILLIAMSON	0683	06	027	383	

Rev. 6/29/11

PLOT DRIVER: RD*11x17*PDF.plt
PEN TABLE: plotdrv*ocon.tbl
FILE: r:\trans-design\o'connor\cadd\bdg\R-DCES\0C45FDresdc01.dgn

TIME: 1:56:22 PM
DATE: 6/2/2011

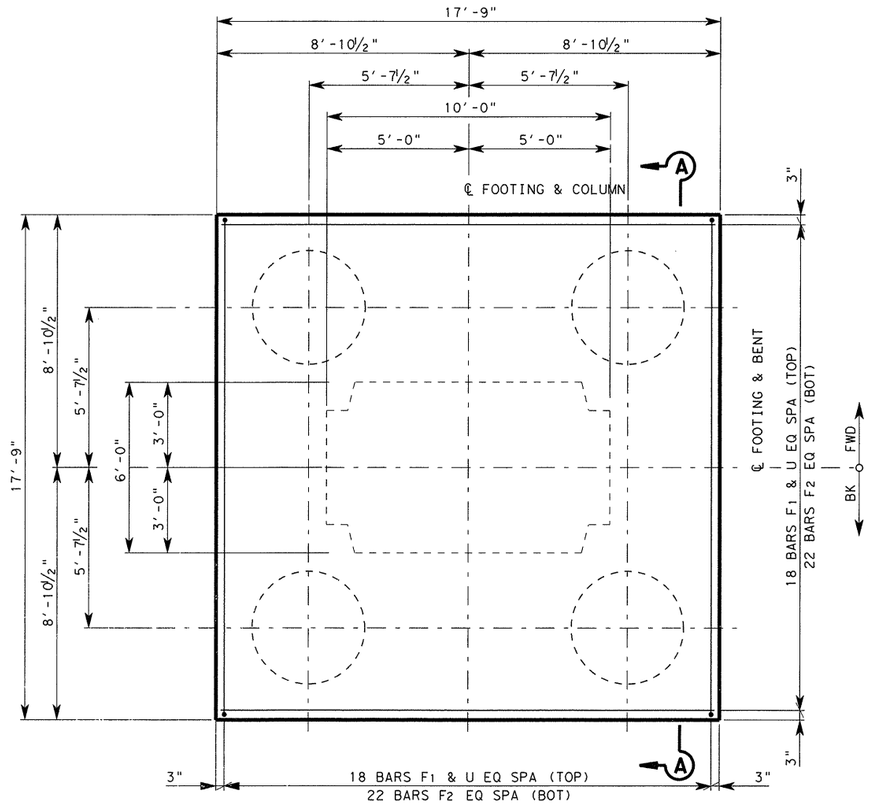

PLAN

ESTIMATED QUANTITES					
BENT NO	CLASS "C" (MASS) CONC (FOOTING) (CY)	STRUCT EXCAV (CY)	TEMP SPCL SHORING (SF)	DRILL SHAFT (48"*) (LF)	CALCULATED DRILL SHAFT LOAD (EACH) (TONS)
8	58.3	87	474	136	210
9	58.3	87	474	136	211

BILL OF REINFORCING STEEL (TYP EACH FOOTING)				
BAR	NO.	SIZE	LENGTH	WEIGHT
F1	36	#8	17'-3"	1,658
F2	36	#9	17'-3"	2,111
FD	36	#11	15'-6"	2,949
T	16	#10	17'-3"	1,188
U	96	#6	4'-1"	589
REINFORCING STEEL *			LB	8,495

* FOR CONTRACTOR'S INFORMATION ONLY

NOTES:

1. DESIGNED ACCORDING TO AASHTO LRFD BRIDGE SPECIFICATIONS, 4TH EDITION 2007 AND 2009 CURRENT INTERIM'S FOR HL-93 LOADING.
2. ALL DIMENSIONS TO THE REINFORCING STEEL ARE TO THE ℄ OF THE BAR UNLESS OTHERWISE NOTED.
3. SEE "FOUNDATION LAYOUT" FOR FOUNDATION LOCATION AND ORIENTATION.
4. SEE CORRESPONDING BENT SHEET FOR PLACEMENT OF BARS FD TO MATCH COLUMN REINFORCING.
5. SPECIAL SHORING SHALL BE USED AS NOTED WITH THE ABILITY TO POUR AGAINST EARTH. CONTRACTOR SHALL MAINTAIN 3" MINIMUM CLEAR COVER.

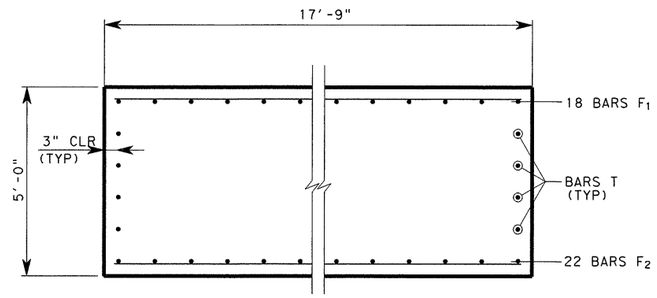

SECTION A-A

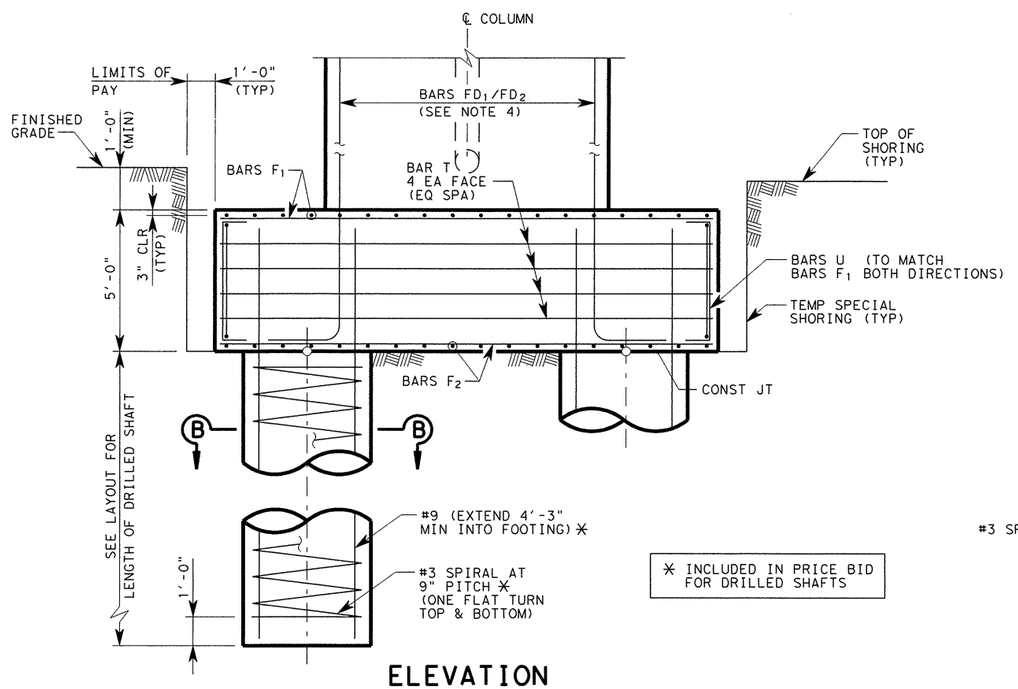

✳ INCLUDED IN PRICE BID FOR DRILLED SHAFTS

ELEVATION

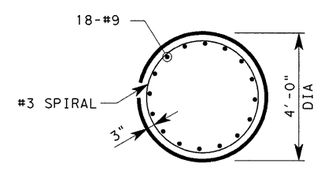

SECTION B-B

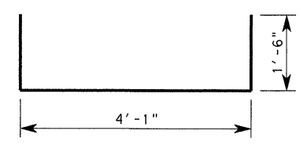

BARS U

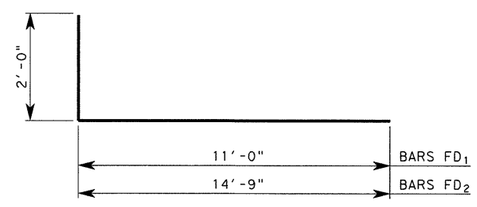

BARS FD

HL-93 LOADING

STATE OF TEXAS
OSAMA A. SHAHAWY
88476
LICENSED PROFESSIONAL ENGINEER
6/7/11

REV. No.	DATE	REVISION	BY
△			
△			
△			

PBSJ an Atkins company TBPE REG. # F-474

Texas Department of Transportation Austin District
©2011 by TxDOT

SH 45 / O'CONNOR DRIVE RAMP EAST-SOUTH DC FOUNDATION DETAILS BENTS 8 AND 9

SCALE: NTS — SHEET 2 OF 3

DESIGNED: RBR	FED. RD DIV. No.	STATE	PROJECT No.			HIGHWAY No.
CHECKED: OAS	6	TEXAS				LP 1/SH 45
DRAWN: JF	STATE DISTRICT	COUNTY	CONTROL No.	SECTION No.	JOB No.	SHEET No.
CHECKED: OAS	AUSTIN	WILLIAMSON	0683	06	027	384

Rev. 6/29/11

PLOT DRIVER: RD*11x17*PDF.plt
PEN TABLE: plotordr*ocon.tbl
FILE: r:\trans-design\o'connor\cadd\bdg\R-DCES\OC45FDresdc02.dgn

ESTIMATED QUANTITES					
BENT NO	CLASS "C" (MASS) CONC (FOOTING) (CY)	STRUCT EXCAV (CY)	TEMP SPCL SHORING (SF)	DRILL SHAFT (48"*) (LF)	CALCULATED DRILL SHAFT LOAD (EACH) (TONS)
11	24.7	42	351	72	217
12	24.7	42	351	68	155
13	24.7	42	351	68	156

BILL OF REINFORCING STEEL (TYP EACH FOOTING)				
BAR	NO.	SIZE	LENGTH	WEIGHT
F1	9	#8	17'-3"	415
F2	9	#11	17'-3"	825
FD	36	#11	15'-5"	2,949
S	24	#6	23'-8"	853
T	8	#10	17'-3"	594
U1	8	#6	9'-10"	118
U2	10	#6	6'-4"	95
REINFORCING STEEL *			LB	5,847

* FOR CONTRACTOR'S INFORMATION ONLY

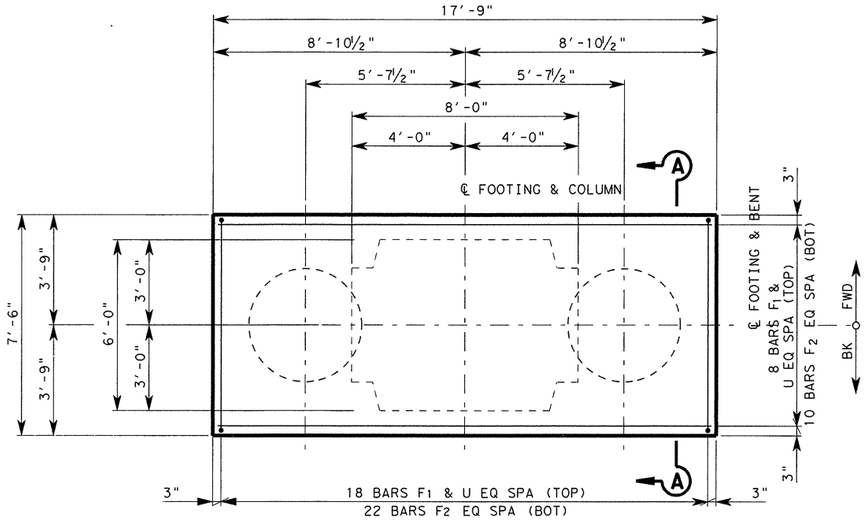

PLAN

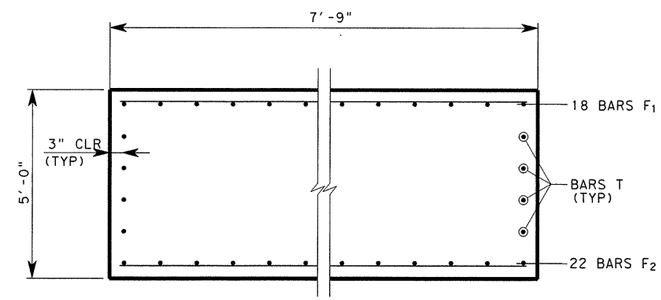

SECTION A-A

NOTES:

1. DESIGNED ACCORDING TO AASHTO LRFD BRIDGE SPECIFICATIONS, 4TH EDITION 2007 AND 2009 CURRENT INTERIM'S FOR HL-93 LOADING.
2. ALL DIMENSIONS TO THE REINFORCING STEEL ARE TO THE ℄ OF THE BAR UNLESS OTHERWISE NOTED.
3. SEE "FOUNDATION LAYOUT" FOR FOUNDATION LOCATION AND ORIENTATION.
4. SEE CORRESPONDING BENT SHEET FOR PLACEMENT OF BARS FD TO MATCH COLUMN REINFORCING.
5. SPECIAL SHORING SHALL BE USED AS NOTED WITH THE ABILITY TO POUR AGAINST EARTH. CONTRACTOR SHALL MAINTAIN 3" MINIMUM CLEAR COVER.

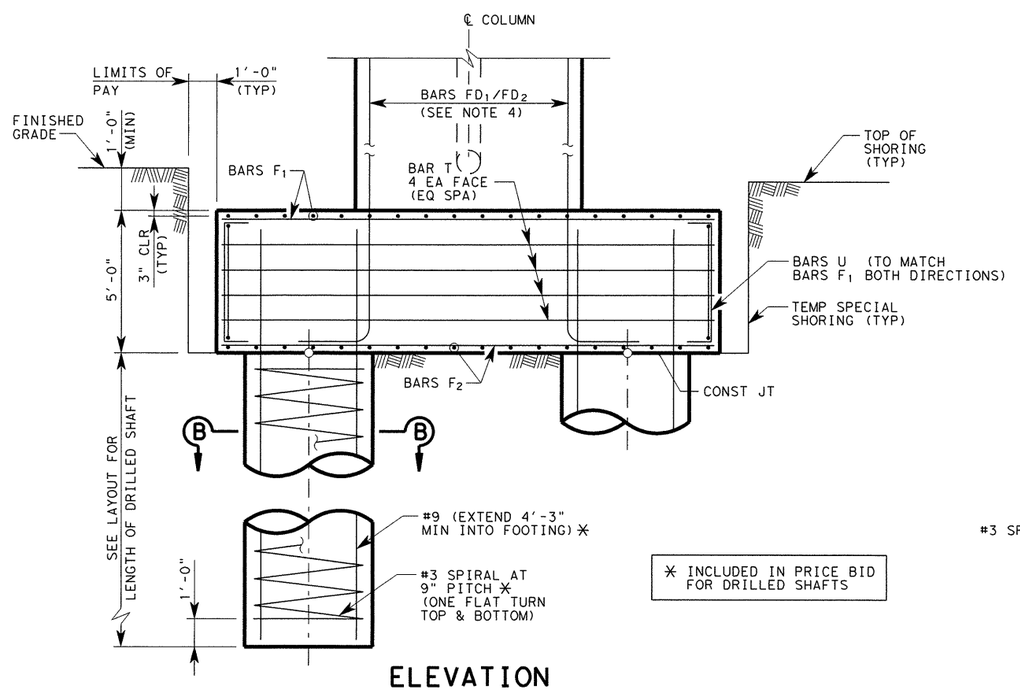

✳ INCLUDED IN PRICE BID FOR DRILLED SHAFTS

ELEVATION

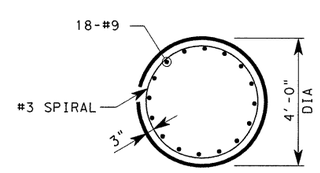

SECTION B-B

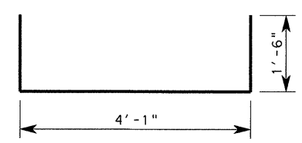

BARS U

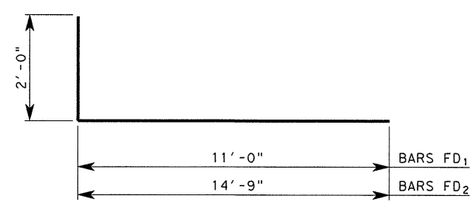

BARS FD

HL-93 LOADING

STATE OF TEXAS
OSAMA A. SHAHAWY
88476
LICENSED PROFESSIONAL ENGINEER
6/7/11

REV. No.	DATE	REVISION	BY
△			
△			
△			

PBSJ an Atkins company TBPE REG. # F-474

Texas Department of Transportation
Austin District
©2011 by TxDOT

SH 45 / O'CONNOR DRIVE RAMP EAST-SOUTH DC FOUNDATION DETAILS BENTS 11, 12 AND 13

SCALE: NTS — SHEET 3 OF 3

DESIGNED: RBR	FED. RD DIV. No.	STATE	PROJECT No.			HIGHWAY No.	
CHECKED: OAS	6	TEXAS				LP 1/SH 45	
DRAWN: JF	STATE DISTRICT	COUNTY	CONTROL No.	SECTION No.	JOB No.	SHEET No.	
CHECKED: OAS	AUSTIN	WILLIAMSON	0683	06	027	385	

Rev. 6/29/11

DATE: 6/2/2011 TIME: 1:56:23 PM
PLOT DRIVER: RD*11x17*PDF.pl+
PEN TABLE: plotordr*ocon.+bl
FILE: r:\trans-design\o'connor\cadd\bdg\R-DCES\OC45FDresdc03.dgn

DATE: 4/11/2011 TIME: 10:36:10 AM

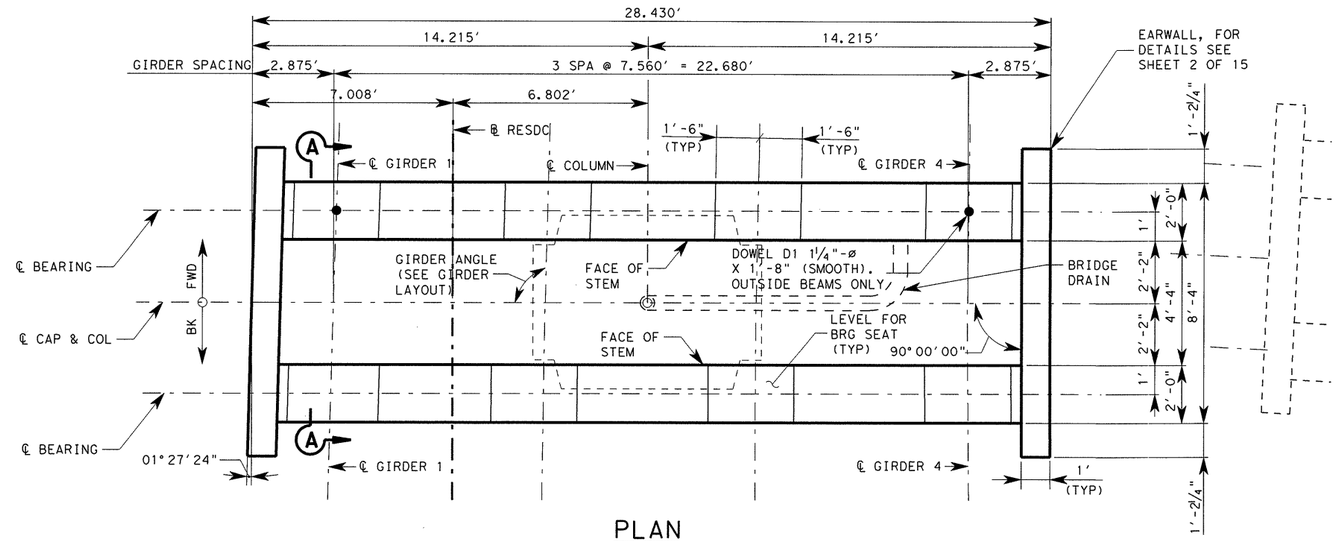

PLAN

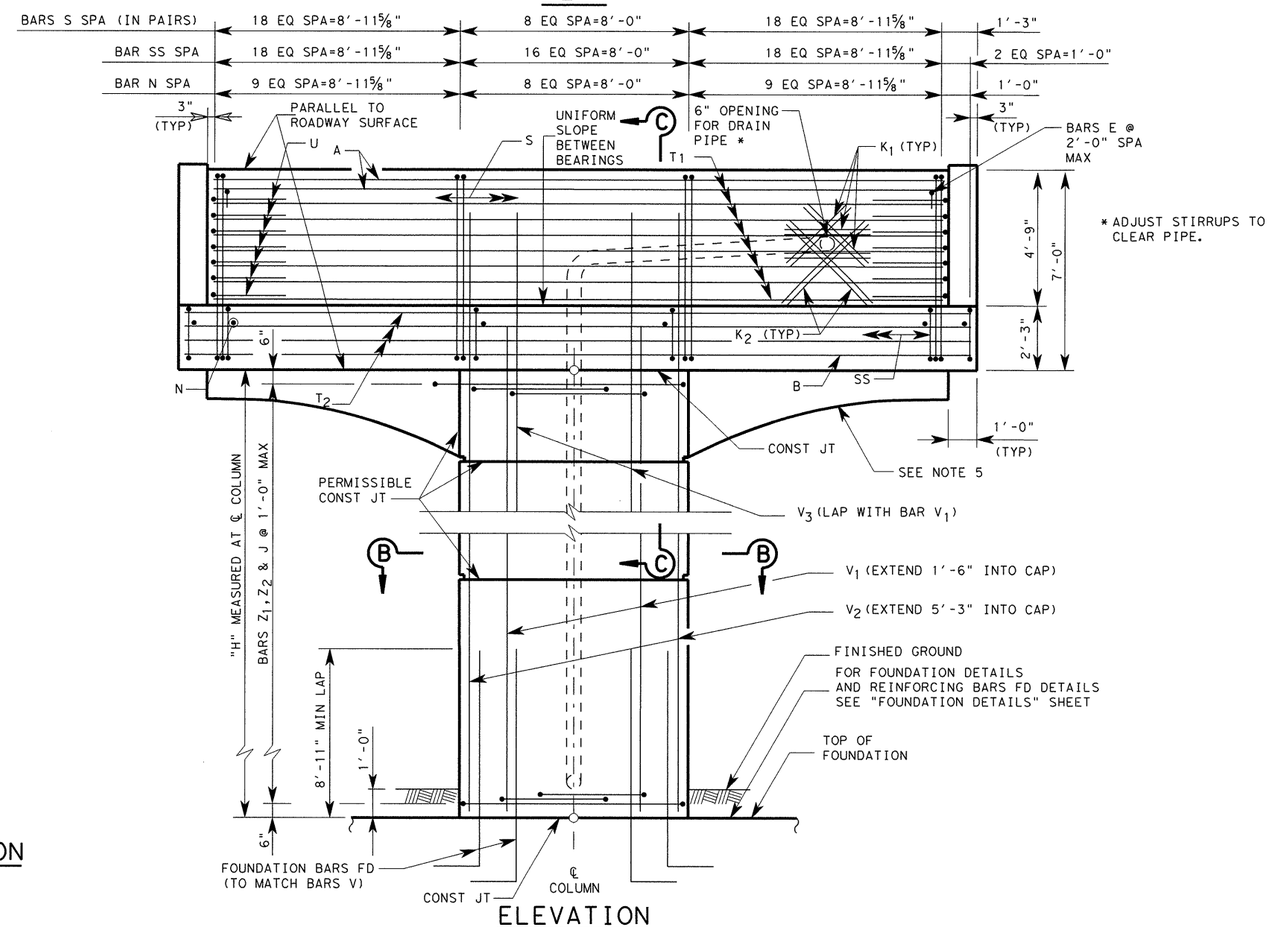

* ADJUST STIRRUPS TO CLEAR PIPE.

ELEVATION

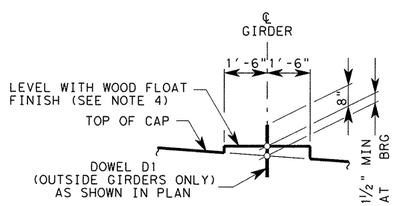

BEARING SEAT ELEVATION

GENERAL NOTES:

1. DESIGNED ACCORDING TO AASHTO LRFD BRIDGE SPECIFICATIONS, 4TH EDITION 2007 AND 2009 CURRENT INTERIM'S FOR HL-93 LOADING.
2. CONCRETE STRENGTH F'C=3600 PSI.
3. ALL REINFORCING SHALL BE GRADE 60.
4. BEARING SURFACE SHALL BE CLEAN AND FREE OF ALL LOOSE MATERIAL BEFORE PLACING BEARING PAD.
5. SEE "AESTHETIC TREATMENT REINFORCEMENT DETAILS" SHEET FOR ARCH REINFORCEMENT AND AESTHETIC REVEAL DETAIL.

STATE OF TEXAS
OSAMA A. SHAHAWY
88476
LICENSED PROFESSIONAL ENGINEER
4/11/11

HL-93 LOADING

REV. No.	DATE	REVISION	BY
△			
△			
△			

PBSJ an Atkins company TBPE REG. # F-474

Texas Department of Transportation
Austin District
©2011 by TxDOT

SH 45 / O'CONNOR DRIVE RAMP EAST-SOUTH DC BENT 6

SCALE: NTS SHEET 1 OF 20

DESIGNED: RBR	FED. RD DIV. No.	STATE	PROJECT No.			HIGHWAY No.
CHECKED: OAS	6	TEXAS				LP 1/SH 45

DRAWN: RBR	STATE DISTRICT	COUNTY	CONTROL No.	SECTION No.	JOB No.	SHEET No.
CHECKED: OAS	AUSTIN	WILLIAMSON	0683	06	027	386

PLOT DRIVER: RD*11x17*PDF.plt
PEN TABLE: plotordr*ocon.tbl
FILE: r:\trans-design\o'connor\cadd\bdg\R-DCES\OC45BTresdc01.dgn

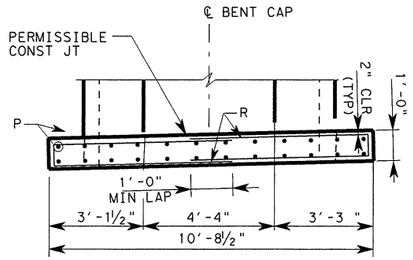

PLAN

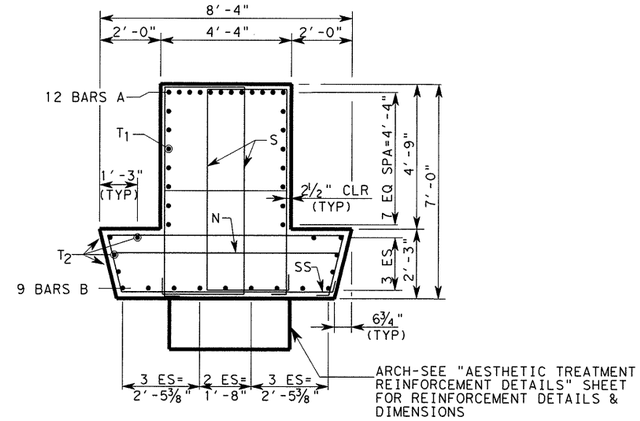

SECTION A-A

* VARIES DEPENDING ON ROADWAY GRADE, 4" MIN AT ℄ BEARING ON LOW SIDE.

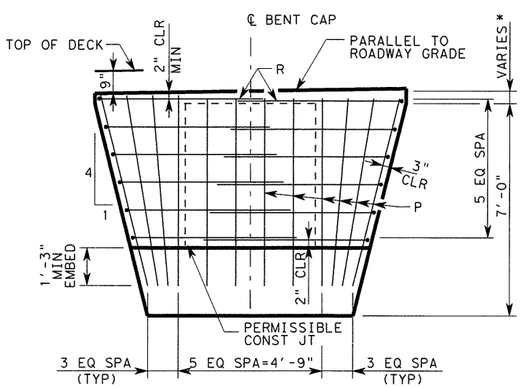

ELEVATION

EARWALL DETAIL

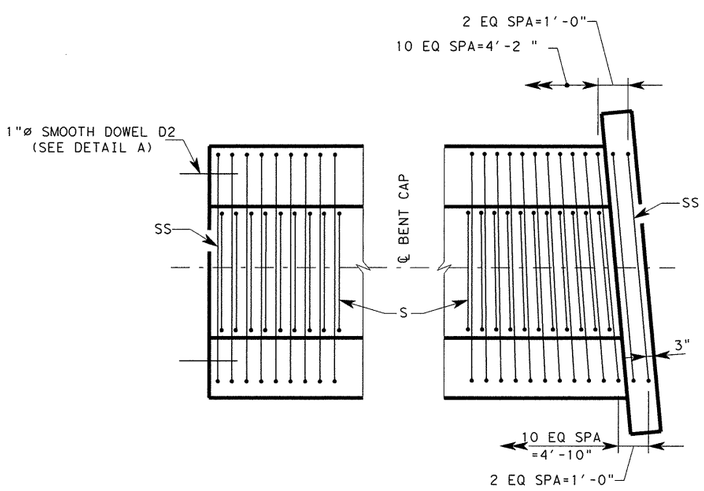

END CAP DETAIL

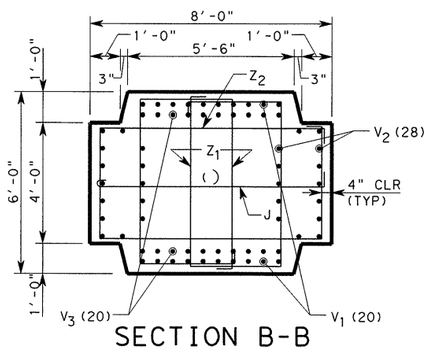

SECTION B-B

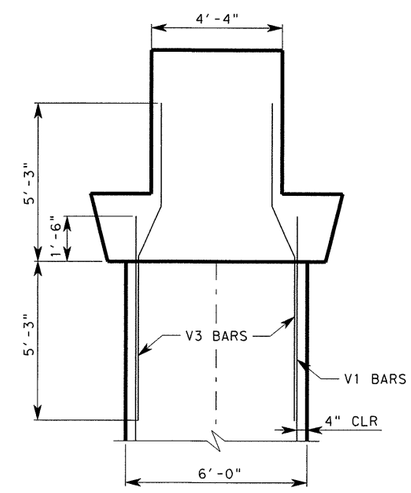

SECTION C-C

(CAP REINFORCEMENT NOT SHOWN FOR CLARITY)

STATE OF TEXAS
OSAMA A. SHAHAWY
88476
LICENSED PROFESSIONAL ENGINEER
6/7/11

HL-93 LOADING

REV. No.	DATE	REVISION	BY
△			
△			
△			

PBSJ an Atkins company TBPE REG. # F-474

Texas Department of Transportation
Austin District
©2011 by TxDOT

SH 45 / O'CONNOR DRIVE RAMP EAST-SOUTH DC BENT 6

SCALE: NTS SHEET 2 OF 20

DESIGNED: RBR	FED. RD DIV. No.	STATE	PROJECT No.			HIGHWAY No.
CHECKED: OAS	6	TEXAS				LP 1/SH 45
DRAWN: RBR	STATE DISTRICT	COUNTY	CONTROL No.	SECTION No.	JOB No.	SHEET No.
CHECKED: OAS	AUSTIN	WILLIAMSON	0683	06	027	387

Rev. 6/29/11

PLOT DRIVER: RD*11x17*PDF.plt
PEN TABLE: plotordr*ocon.tbl
FILE: r:\trans-design\o'connor\cadd\bdg\R-DCES\OC45BTresdc02.dgn
DATE: 6/2/2011 TIME: 1:56:25 PM

① TABLE OF VARIABLES COLUMN QUANTITIES

COL	COLUMN HEIGHT "H"	BARS V_1 #11 NO.	BARS V_1 #11 LENGTH	BARS V_1 #11 WEIGHT (LB)	BARS V_2 #11 NO.	BARS V_2 #11 LENGTH	BARS V_2 #11 WEIGHT (LB)	BARS V_3 #8 NO.	BARS V_3 #8 LENGTH	BARS V_3 #8 WEIGHT (LB)	BARS Z_1 #5 19'-2" NO.	BARS Z_1 WEIGHT (LB)	BARS Z_2 #5 22'-4" NO.	BARS Z_2 WEIGHT (LB)	BARS J #4 8'-5" NO.	BARS J WEIGHT (LB)	TOTAL ESTIMATED ② QUANTITIES PER COLUMN: REINF STEEL * LB	TOTAL ESTIMATED ② QUANTITIES PER COLUMN: CLASS "C" (MASS) CONC (BENT) CY
1	26	16	27'-6"	2388	24	31'-3"	3985	16	10'-6"	449	50	1000	28	582	25	141	8495	42.0

* FOR CONTRACTOR'S INFORMATION ONLY

① ADJUST BARS V_1 AND V_2 LENGTHS BY 1 FT, NUMBER OF BARS Z_2 AND J BY 1, AND NUMBER OF BARS Z_1 BY 2 FOR EACH 1 LF VARIATION IN "H" VALUE.

② ESTIMATED QUANTITIES ARE BASED ON HEIGHT SHOWN ON BRIDGE LAYOUT.

TABLE OF ETIMATED QUANTITIES (BENT CAP)

BAR	NO.	SIZE	LENGTH	WEIGHT
A	12	#11	26'-1"	1,664
B	9	#11	28'-1"	1,343
D	2	1 1/4 " DIA	1'-8"	14
K1	8	#6	3'-0"	36
K2	4	#6	4'-0"	24
N	34	#6	7'-7"	387
P	24	#5	6'-1"	152
R	12	#4	11'-9"	94
S	109	#5	19'-3"	2,192
SS	66	#6	20'-6"	2,031
T1	14	#6	26'-1"	549
T2	8	#6	28'-1"	338
U	14	#6	9'-0"	189
REINFORCING STEEL *			LB	9,014
CLASS "C" (MASS) CONC (BENT)			CY	42.6

* FOR CONTRACTOR'S INFORMATION ONLY

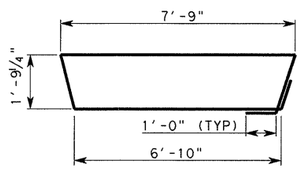

BARS SS

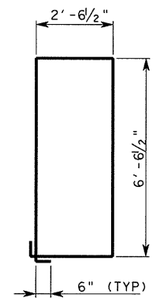

BARS S

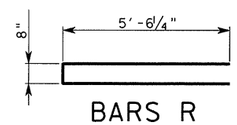

BARS R

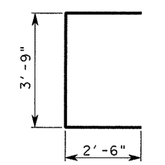

BARS U

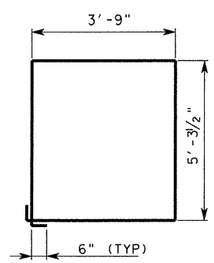

BARS Z1

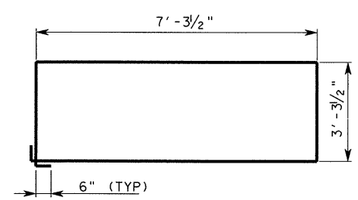

BARS Z2

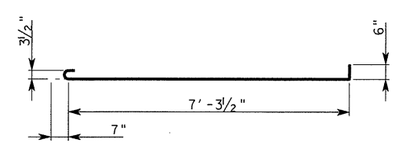

BARS J

HL-93 LOADING

STATE OF TEXAS
OSAMA A. SHAHAWY
88476
LICENSED PROFESSIONAL ENGINEER
6/7/11

REV. No.	DATE	REVISION	BY
△			
△			
△			

PBSJ an Atkins company TBPE REG. # F-474

Texas Department of Transportation
Austin District
©2011 by TxDOT

SH 45 / O'CONNOR DRIVE RAMP EAST-SOUTH DC BENT 6

SCALE: NTS — SHEET 3 OF 20

DESIGNED: RBR	FED. RD DIV. No.	STATE	PROJECT No.			HIGHWAY No.
CHECKED: OAS	6	TEXAS				LP 1/SH 45
DRAWN: RBR	STATE DISTRICT	COUNTY	CONTROL No.	SECTION No.	JOB No.	SHEET No.
CHECKED: OAS	AUSTIN	WILLIAMSON	0683	06	027	388

Rev. 6/29/11

PLOT DRIVER: RD*11x17*PDF.plt
PEN TABLE: plotordr*ocon.tbl
FILE: r:\trans-design\o'connor\cadd\bdg\R-DCES\OC45BTresdc03.dgn
DATE: 6/2/2011 TIME: 1:56:27 PM

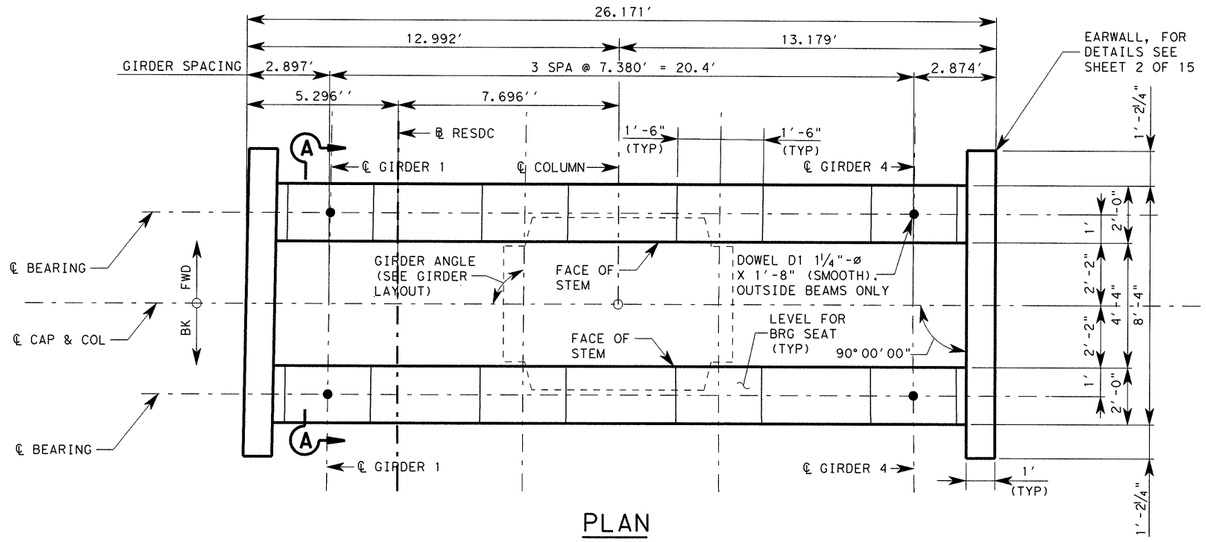

PLAN

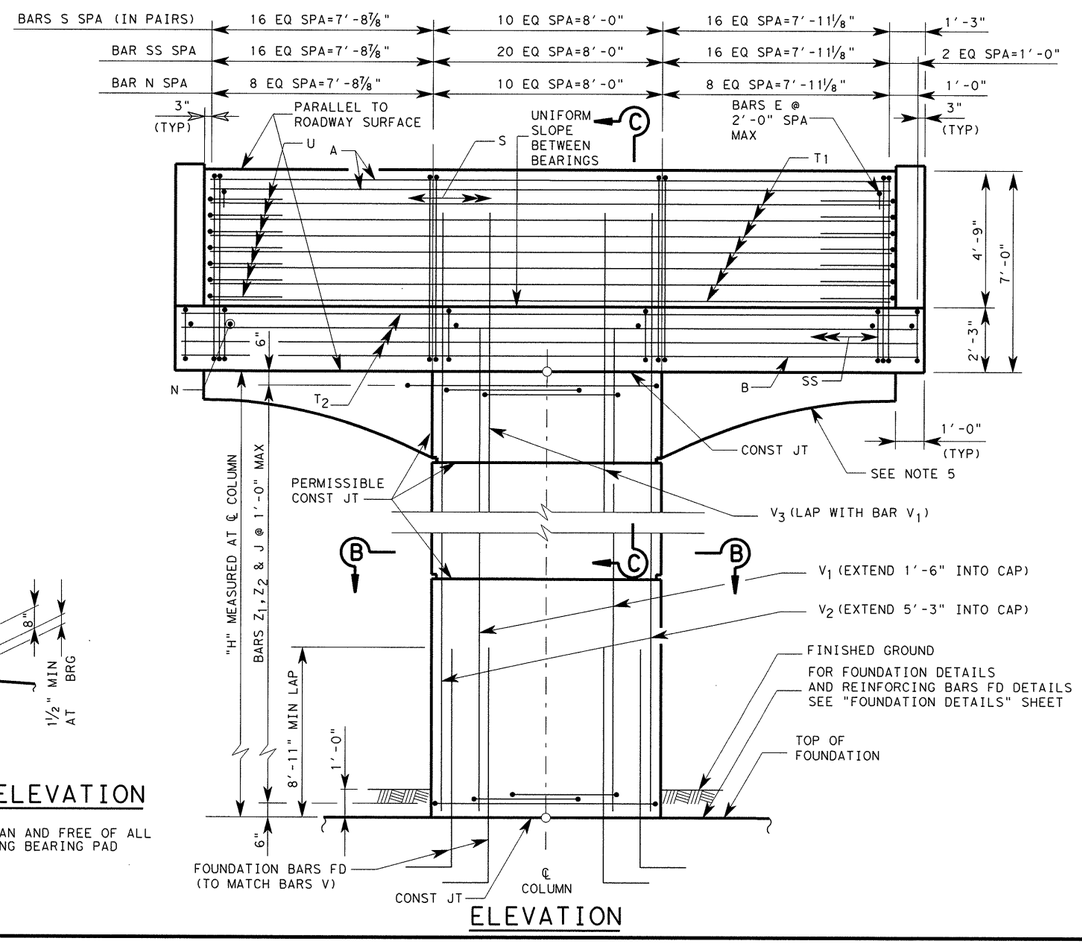

ELEVATION

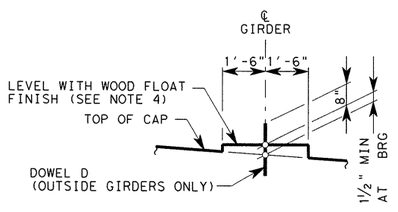

BEARING SEAT ELEVATION

BEARING SURFACE MUST BE CLEAN AND FREE OF ALL LOOSE MATERIAL BEFORE PLACING BEARING PAD

GENERAL NOTES:

1. DESIGNED ACCORDING TO AASHTO LRFD BRIDGE SPECIFICATIONS, 4TH EDITION 2007 AND 2009 CURRENT INTERIMS FOR HL-93 LOADING.
2. CONCRETE STRENGTH F'C=3600 PSI.
3. ALL REINFORCING SHALL BE GRADE 60.
4. BEARING SURFACE SHALL BE CLEAN AND FREE OF ALL LOOSE MATERIAL BEFORE PLACING BEARING PAD.
5. SEE "AESTHETIC TREATMENT REINFORCEMENT DETAILS" SHEET FOR ARCH REINFORCEMENT AND AESTHETIC REVEAL DETAIL.
6. SEE "DRAIN DETAILS" SHEET FOR DETAILS AND DIMENSIONS NOT SHOWN.

* ADJUST BARS S, SS, AND N SPACING TO CLEAR DRAIN PIPE AS NEEDED.

HL-93 LOADING

STATE OF TEXAS
OSAMA A. SHAHAWY
88476
LICENSED PROFESSIONAL ENGINEER
4/11/11

REV. No.	DATE	REVISION	BY
△			
△			
△			

PBSJ an Atkins company TBPE REG. # F-474

Texas Department of Transportation
Austin District
©2011 by TxDOT

SH 45 / O'CONNOR DRIVE RAMP EAST-SOUTH DC BENT 7

SCALE: NTS SHEET 4 OF 20

DESIGNED: DEW	FED. RD DIV. No.	STATE	PROJECT No.			HIGHWAY No.
CHECKED: OAS	6	TEXAS				LP 1/SH 45
DRAWN: DEW	STATE DISTRICT	COUNTY	CONTROL No.	SECTION No.	JOB No.	SHEET No.
CHECKED: OAS	AUSTIN	WILLIAMSON	0683	06	027	389

DATE: 4/11/2011 TIME: 10:36:13 AM
PLOT DRIVER: RD*11x17*PDF.plt
PEN TABLE: plotordr*ocon.tbl
FILE: r:\trans-design\o'connor\cadd\bdg\R-DCES\OC45BTresdc04.dgn

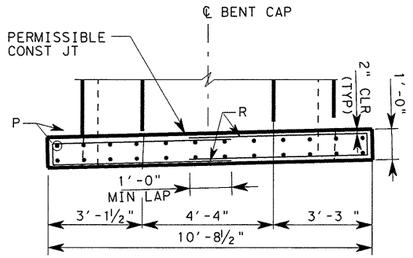

PLAN

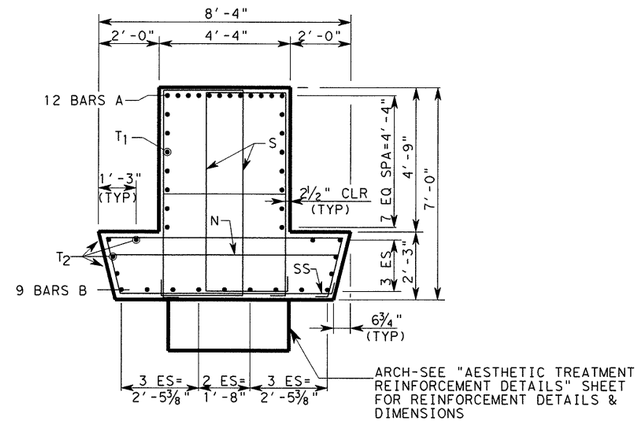

SECTION A-A

* VARIES DEPENDING ON ROADWAY GRADE, 4" MIN AT ℄ BEARING ON LOW SIDE.

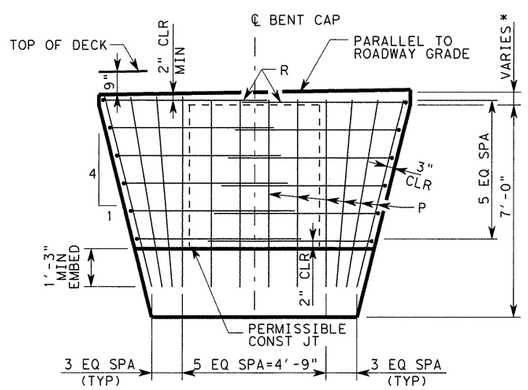

ELEVATION

EARWALL DETAIL

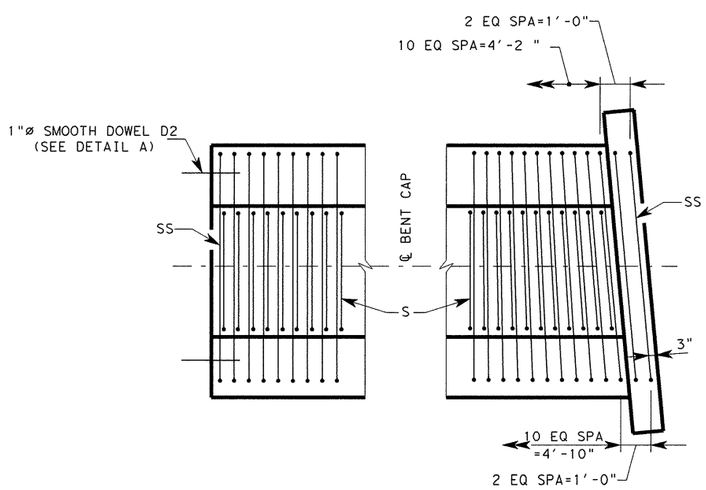

END CAP DETAIL

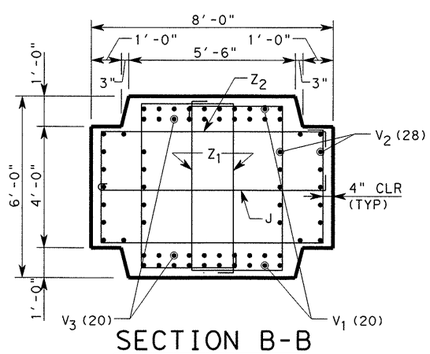

SECTION B-B

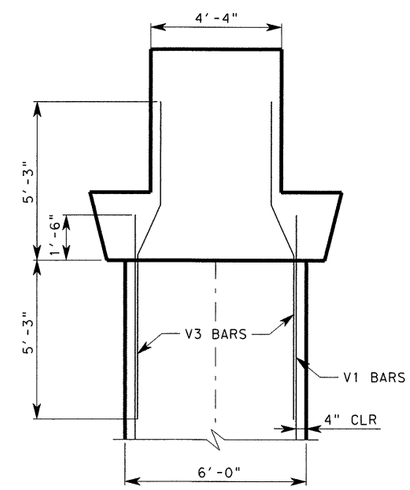

SECTION C-C

(CAP REINFORCEMENT NOT SHOWN FOR CLARITY)

HL-93 LOADING

STATE OF TEXAS
OSAMA A. SHAHAWY
88476
LICENSED PROFESSIONAL ENGINEER
6/7/11

REV. No.	DATE	REVISION	BY
△			
△			
△			

PBSJ an Atkins company TBPE REG. # F-474

Texas Department of Transportation
Austin District
©2011 by TxDOT

SH 45 / O'CONNOR DRIVE RAMP EAST-SOUTH DC BENT 7

SCALE: NTS SHEET 5 OF 20

DESIGNED: RBR	FED. RD DIV. No.	STATE	PROJECT No.			HIGHWAY No.
CHECKED: OAS	6	TEXAS				LP 1/SH 45
DRAWN: RBR	STATE DISTRICT	COUNTY	CONTROL No.	SECTION No.	JOB No.	SHEET No.
CHECKED: OAS	AUSTIN	WILLIAMSON	0683	06	027	390

Rev. 6/29/11

DATE: 6/2/2011 TIME: 1:56:28 PM

PLOT DRIVER: RD*11x17*PDF.plt
PEN TABLE: plotord*ocon.tbl
FILE: r:\trans-design\o'connor\cadd\bdg\R-DCES\OC45BTresdc05.dgn

① TABLE OF VARIABLES COLUMN QUANTITIES

COL	COLUMN HEIGHT "H"	BARS V_1 #11 NO.	BARS V_1 #11 LENGTH	BARS V_1 #11 WEIGHT (LB)	BARS V_2 #11 NO.	BARS V_2 #11 LENGTH	BARS V_2 #11 WEIGHT (LB)	BARS V_3 #8 NO.	BARS V_3 #8 LENGTH	BARS V_3 #8 WEIGHT (LB)	BARS Z_1 #5 19'-2" NO.	BARS Z_1 #5 19'-2" WEIGHT (LB)	BARS Z_2 #5 22'-4" NO.	BARS Z_2 #5 22'-4" WEIGHT (LB)	BARS J #4 8'-5" NO.	BARS J #4 8'-5" WEIGHT (LB)	TOTAL ESTIMATED ② QUANTITIES PER COLUMN: REINF STEEL * LB	TOTAL ESTIMATED ② QUANTITIES PER COLUMN: CLASS "C" (MASS) CONC (BENT) CY
1	27	16	28'-6"	2423	24	32'-3"	4112	16	10'-6"	449	52	1040	26	606	26	146	8776	43.50

* FOR CONTRACTOR'S INFORMATION ONLY

① ADJUST BARS V_1 AND V_2 LENGTHS BY 1 FT, NUMBER OF BARS Z_2 AND J BY 1, AND NUMBER OF BARS Z_1 BY 2 FOR EACH 1 LF VARIATION IN "H" VALUE.

② ESTIMATED QUANTITIES ARE BASED ON HEIGHT SHOWN ON BRIDGE LAYOUT.

TABLE OF ETIMATED QUANTITIES (BENT CAP)

BAR	NO.	SIZE	LENGTH	WEIGHT
A	12	#11	23'-10"	1,520
B	9	#11	25'-10"	1,235
D	4	1 1/4 "DIA	1'-8"	29
N	31	#6	7'-7"	353
P	24	#5	6'-1"	152
R	12	#4	11'-9"	94
S	97	#5	19'-3"	1,952
SS	61	#6	20'-6"	1,877
T1	14	#6	23'-10"	501
T2	8	#6	25'-10"	310
U	14	#6	9'-0"	189
REINFORCING STEEL *			LB	8,213
CLASS "C" (MASS) CONC (BENT)			CY	39.4

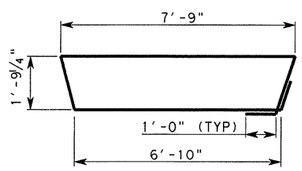

BARS SS

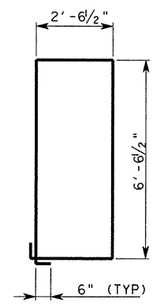

BARS S

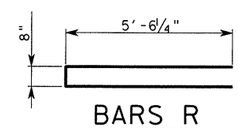

BARS R

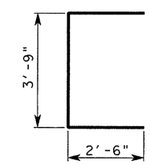

BARS U

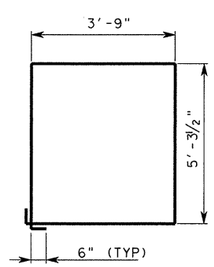

BARS Z1

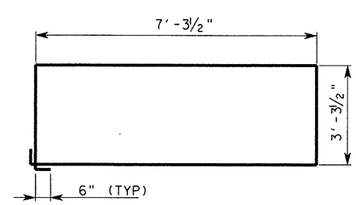

BARS Z2

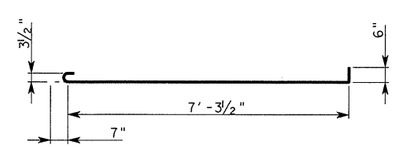

BARS J

HL-93 LOADING

STATE OF TEXAS
OSAMA A. SHAHAWY
88476
LICENSED PROFESSIONAL ENGINEER
6/7/11

REV. No.	DATE	REVISION	BY
△			
△			
△			

PBSJ an Atkins company TBPE REG. # F-474

Texas Department of Transportation
Austin District
©2011 by TxDOT

SH 45 / O'CONNOR DRIVE RAMP EAST-SOUTH DC BENT 7

SCALE: NTS — SHEET 6 OF 20

DESIGNED: RBR	FED. RD DIV. No.	STATE	PROJECT No.			HIGHWAY No.	
CHECKED: OAS	6	TEXAS				LP 1/SH 45	
DRAWN: RBR	STATE DISTRICT	COUNTY	CONTROL No.	SECTION No.	JOB No.	SHEET No.	
CHECKED: OAS	AUSTIN	WILLIAMSON	0683	06	027	391	

Rev. 6/29/11

PLOT DRIVER: RD*11x17*PDF.plt
PEN TABLE: plotordr*ocon.tbl
FILE: r:\trans-design\o'connor\cadd\bdg\R-DCES\0C45BTresdc06.dgn
DATE: 6/2/2011 TIME: 1:56:30 PM

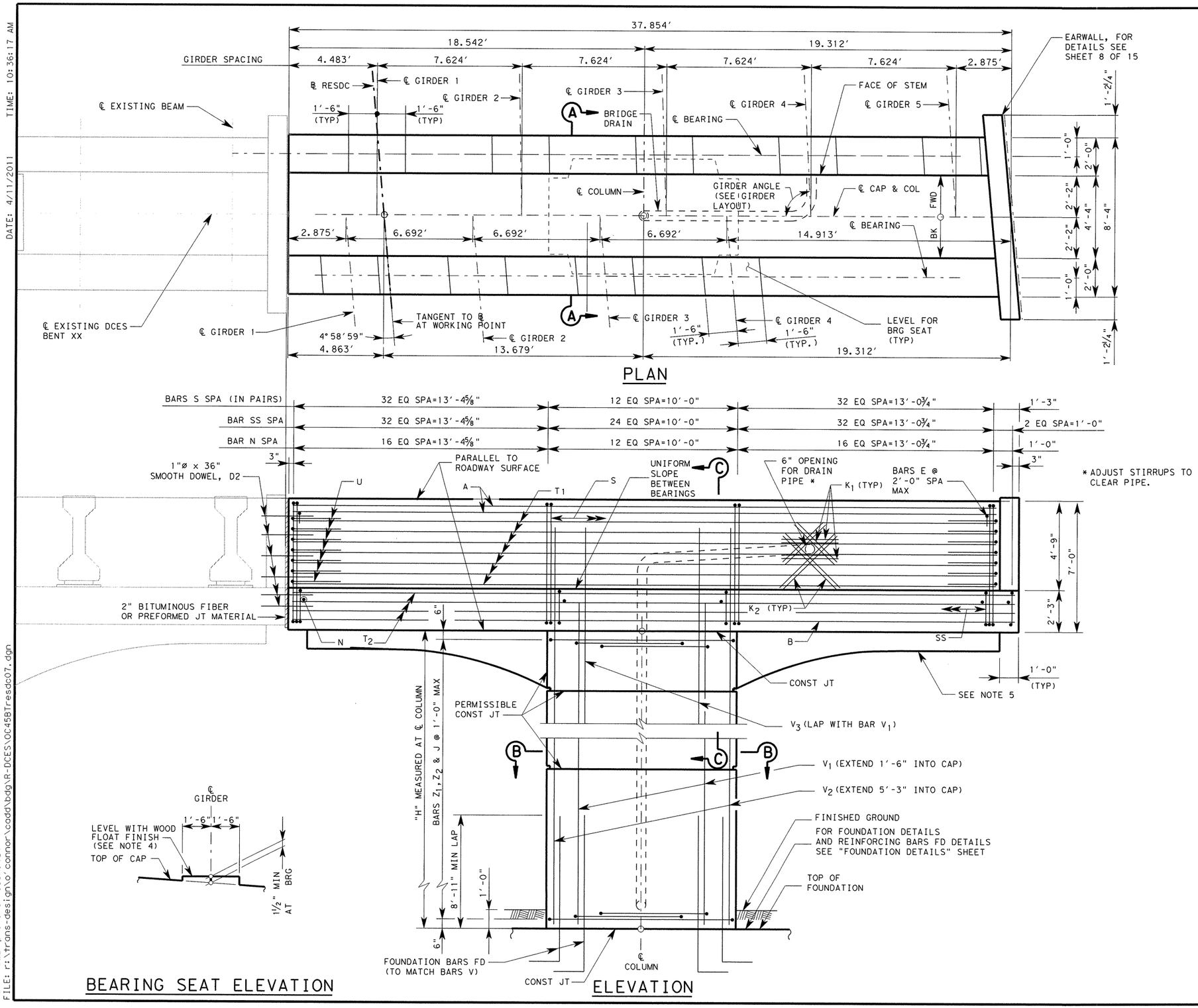

GENERAL NOTES:

1. DESIGNED ACCORDING TO AASHTO LRFD BRIDGE SPECIFICATIONS, 4TH EDITION 2007 AND 2009 CURRENT INTERIM'S FOR HL-93 LOADING.
2. CONCRETE STRENGTH F'C=5000 PSI.
3. ALL REINFORCING SHALL BE GRADE 60.
4. BEARING SURFACE SHALL BE CLEAN AND FREE OF ALL LOOSE MATERIAL BEFORE PLACING BEARING PAD.
5. SEE "AESTHETIC TREATMENT REINFORCEMENT DETAILS" SHEET FOR ARCH REINFORCEMENT AND AESTHETIC REVEAL DETAIL.
6. SKEW ANGLES MEASURED NORMAL TO LOCAL TANGENT IF ON CURVE.

STATE OF TEXAS
OSAMA A. SHAHAWY
88476
LICENSED PROFESSIONAL ENGINEER
4/11/11

HL-93 LOADING

REV. No.	DATE	REVISION	BY
△			
△			
△			

PBSJ an Atkins company TBPE REG. # F-474

Texas Department of Transportation
Austin District
©2011 by TxDOT

SH 45 / O'CONNOR DRIVE RAMP EAST-SOUTH DC BENT 8

SCALE: NTS

SHEET 7 OF 20

DESIGNED: RBR	FED. RD DIV. No.	STATE	PROJECT No.			HIGHWAY No.	
CHECKED: OAS	6	TEXAS				LP 1/SH 45	
DRAWN: JF	STATE DISTRICT	COUNTY	CONTROL No.	SECTION No.	JOB No.	SHEET No.	
CHECKED: OAS	AUSTIN	WILLIAMSON	0683	06	027	392	

TIME: 10:36:17 AM
DATE: 4/11/2011

PLOT DRIVER: RD*11x17*PDF.plt
PEN TABLE: plotordr*ocon.tbl
FILE: r:\trans-design\o'connor\cadd\bdg\R-DCES\OC45BTresdc07.dgn

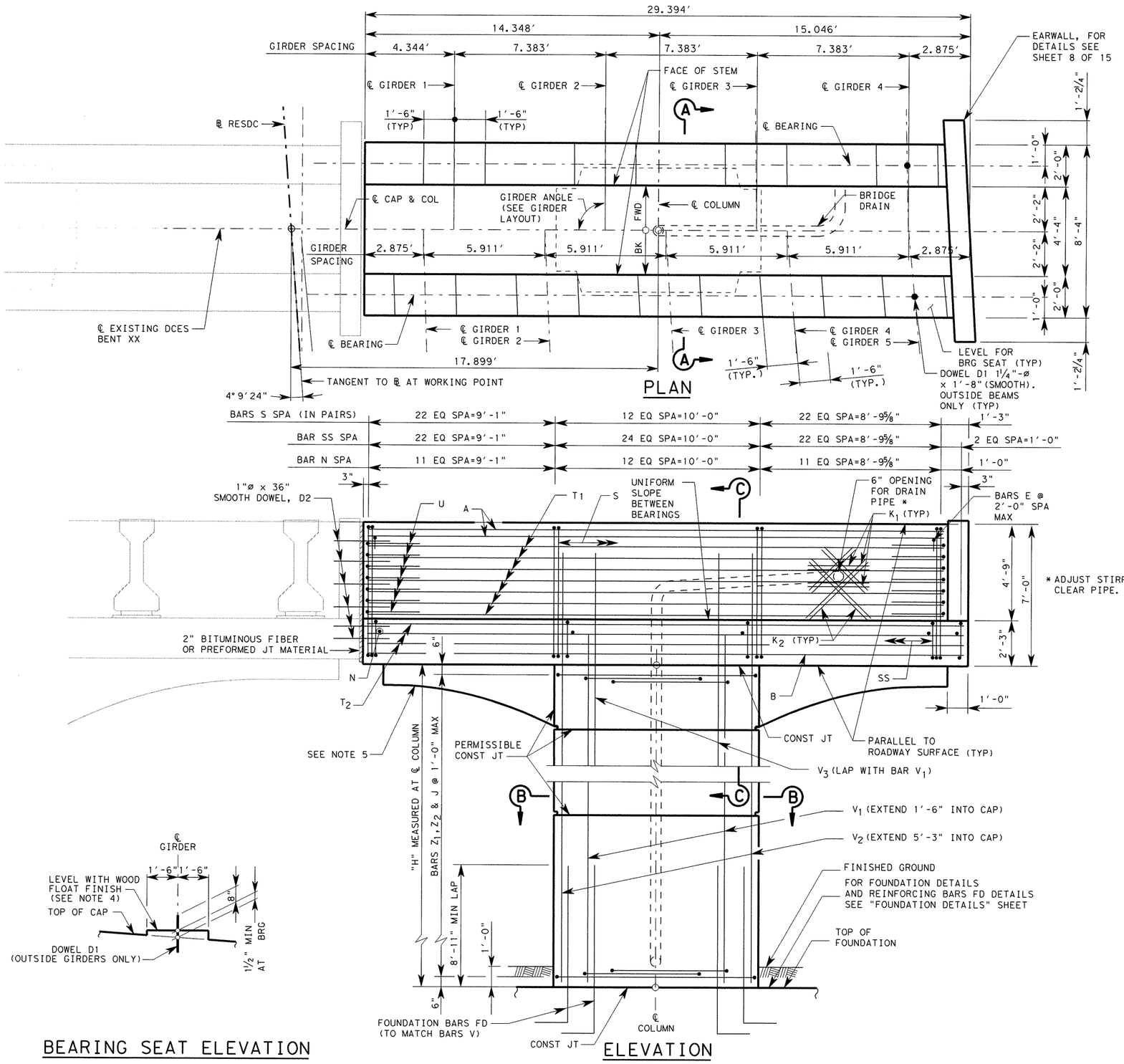

GENERAL NOTES:

1. DESIGNED ACCORDING TO AASHTO LRFD BRIDGE SPECIFICATIONS, 4TH EDITION 2007 AND 2009 CURRENT INTERIM'S FOR HL-93 LOADING.
2. CONCRETE STRENGTH F'C=5000 PSI.
3. ALL REINFORCING SHALL BE GRADE 60.
4. BEARING SURFACE SHALL BE CLEAN AND FREE OF ALL LOOSE MATERIAL BEFORE PLACING BEARING PAD.
5. SEE "AESTHETIC TREATMENT REINFORCEMENT DETAILS" SHEET FOR ARCH REINFORCEMENT AND AESTHETIC REVEAL DETAIL.
6. SKEW ANGLES MEASURED NORMAL TO LOCAL TANGENT IF ON CURVE.

HL-93 LOADING

STATE OF TEXAS
OSAMA A. SHAHAWY
88476
LICENSED PROFESSIONAL ENGINEER
4/11/11

REV. NO.	DATE	REVISION	BY
△			
△			
△			

PBSJ an Atkins company TBPE REG. # F-474

Texas Department of Transportation
Austin District
©2011 by TxDOT

SH 45 / O'CONNOR DRIVE RAMP EAST-SOUTH DC BENT 9

SCALE: NTS SHEET 8 OF 20

DESIGNED: RBR	FED. RD DIV. No.	STATE	PROJECT No.			HIGHWAY No.
CHECKED: OAS	6	TEXAS				LP 1/SH 45

DRAWN: JF	STATE DISTRICT	COUNTY	CONTROL No.	SECTION No.	JOB No.	SHEET No.
CHECKED: OAS	AUSTIN	WILLIAMSON	0683	06	027	393

DATE: 4/11/2011 TIME: 10:36:19 AM

PLOT DRIVER: RD*11x17*PDF.plt
PEN TABLE: plotordr*ocon.tbl
FILE: r:\trans-design\o'connor\oddd\bdg\R-DCES\OC45BTresdc08.dgn

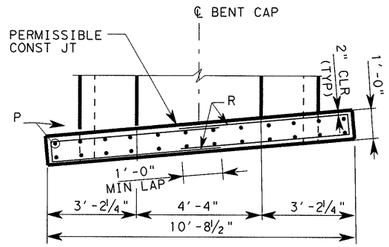

PLAN

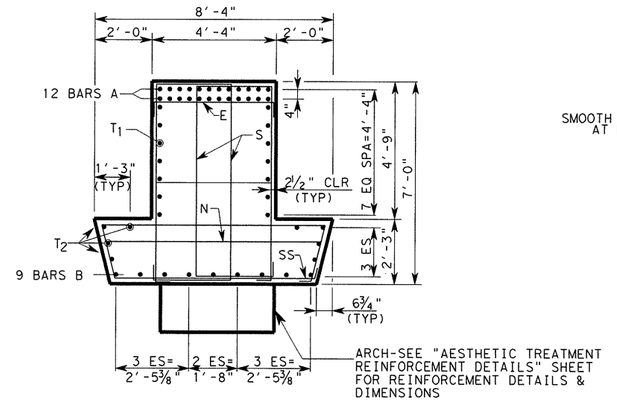

SECTION A-A

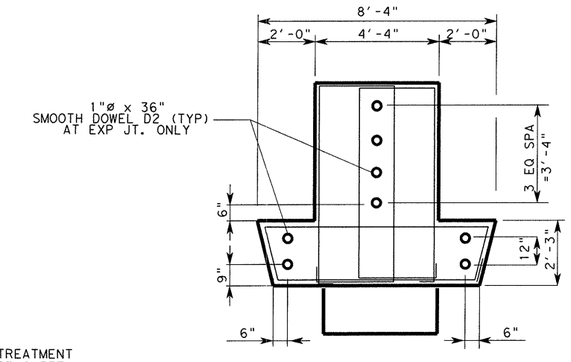

DOWEL TYPICAL DETAIL

* VARIES DEPENDING ON ROADWAY GRADE, 4" MIN AT ℄ BEARING ON LOW SIDE.

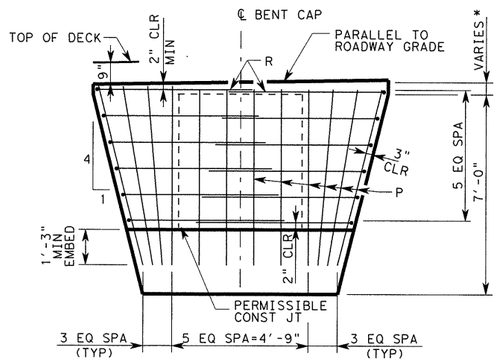

ELEVATION

EARWALL DETAIL

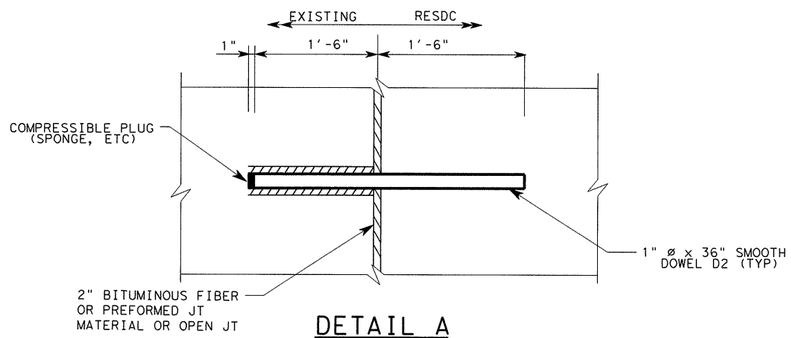

DETAIL A

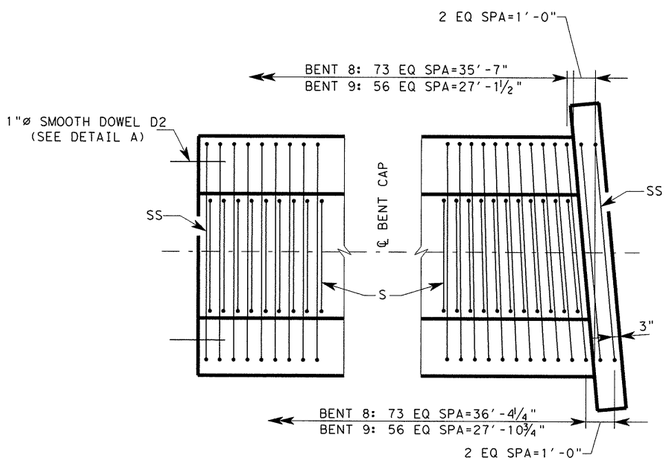

END CAP DETAIL

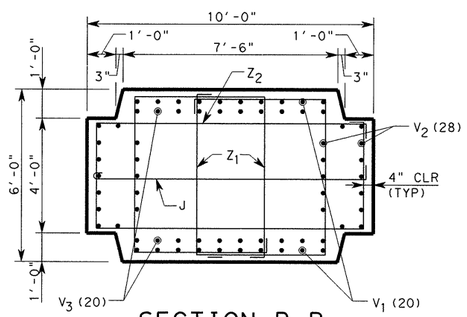

SECTION B-B

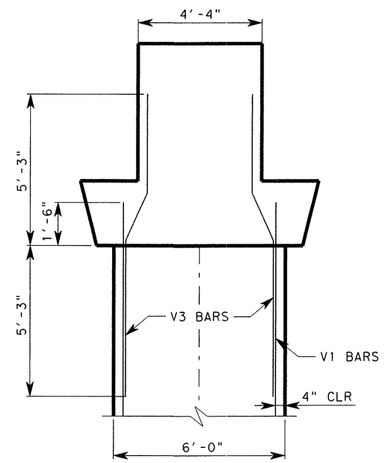

SECTION C-C

(CAP REINFORCEMENT NOT SHOWN FOR CLARITY)

HL-93 LOADING

STATE OF TEXAS
OSAMA A. SHAHAWY
88476
LICENSED PROFESSIONAL ENGINEER
4/11/11

REV. No.	DATE	REVISION	BY
△			
△			
△			

PBSJ an Atkins company TBPE REG. # F-474

Texas Department of Transportation
Austin District
©2011 by TxDOT

SH 45 / O'CONNOR DRIVE RAMP EAST-SOUTH DC BENTS 8 AND 9

SCALE: NTS

SHEET 9 OF 20

DESIGNED: RBR	FED. RD DIV. No.	STATE	PROJECT No.		HIGHWAY No.	
CHECKED: OAS	6	TEXAS			LP 1/SH 45	
DRAWN: JF	STATE DISTRICT	COUNTY	CONTROL No.	SECTION No.	JOB No.	SHEET No.
CHECKED: OAS	AUSTIN	WILLIAMSON	0683	06	027	394

DATE: 4/11/2011 TIME: 10:36:20 AM
PLOT DRIVER: RD*11x17*PDF.plt
PEN TABLE: plotordr*ocon.tbl
FILE: r:\trans-design\o'connor\cadd\bdg\R-DCES\0C45BTresdc09.dgn

① TABLE OF VARIABLES COLUMN QUANTITIES

COL (BENT 8)	COLUMN HEIGHT "H"	BARS V_1 #11 NO.	BARS V_1 #11 LENGTH	BARS V_1 #11 WEIGHT (LB)	BARS V_2 #11 NO.	BARS V_2 #11 LENGTH	BARS V_2 #11 WEIGHT (LB)	BARS V_3 #8 NO.	BARS V_3 #8 LENGTH	BARS V_3 #8 WEIGHT (LB)	BARS Z_1 #5 21'-2" NO.	BARS Z_1 WEIGHT (LB)	BARS Z_2 #5 22'-4" NO.	BARS Z_2 WEIGHT (LB)	BARS J #4 10'-5" NO.	BARS J WEIGHT (LB)	TOTAL ESTIMATED ② QUANTITIES PER COLUMN: REINF STEEL * LB	CLASS "C" (MASS) CONC (BENT) CY
1	24	20	25'-6"	2710	28	29'-3"	4351	20	10'-6"	561	48	1060	24	559	24	167	9408	49.33
COL (BENT 9)	COLUMN HEIGHT "H"	BARS V_1 #11 NO.	BARS V_1 #11 LENGTH	BARS V_1 #11 WEIGHT (LB)	BARS V_2 #11 NO.	BARS V_2 #11 LENGTH	BARS V_2 #11 WEIGHT (LB)	BARS V_3 #8 NO.	BARS V_3 #8 LENGTH	BARS V_3 #8 WEIGHT (LB)	BARS Z_1 #5 21'-2" NO.	BARS Z_1 WEIGHT (LB)	BARS Z_2 #5 22'-4" NO.	BARS Z_2 WEIGHT (LB)	BARS J #4 10'-5" NO.	BARS J WEIGHT (LB)	REINF STEEL * LB	CLASS "C" (MASS) CONC (BENT) CY
1	23	20	24'-6"	2603	28	28'-3"	4203	20	10'-6"	561	46	1016	23	536	23	160	9079	47.28

* FOR CONTRACTOR'S INFORMATION ONLY

① ADJUST BARS V_1 AND V_2 LENGTHS BY 1 FT, NUMBER OF BARS Z_2 AND J BY 1, AND NUMBER OF BARS Z_1 BY 2 FOR EACH 1 LF VARIATION IN "H" VALUE.

② ESTIMATED QUANTITIES ARE BASED ON HEIGHT SHOWN ON BRIDGE LAYOUT.

TABLE OF ETIMATED QUANTITIES (BENT CAP 8)

BAR	NO.	SIZE	LENGTH	WEIGHT
A	24	#9	35'-6"	2,898
B	9	#9	37'-6"	1,148
E	18	#4	4'-11"	59
N	45	#6	7'-7"	513
P	24	#5	6'-1"	152
R	12	#4	11'-9"	94
S	158	#6	19'-3"	4,580
SS	89	#6	20'-6"	2,739
T1	14	#6	35'-6"	747
T2	8	#6	37'-6"	451
U	14	#6	9'-0"	189
REINFORCING STEEL *			LB	13,570
CLASS "C" (MASS) CONC (BENT)			CY	53.4

* FOR CONTRACTOR'S INFORMATION ONLY

TABLE OF ETIMATED QUANTITIES (BENT CAP 9)

BAR	NO.	SIZE	LENGTH	WEIGHT
A	24	#11	27'-1"	3,451
B	9	#11	29'-1"	1,390
D	2	1 1/4 "DIA	1'-8"	14
K1	8	#6	3'-0"	36
K2	4	#6	4'-0"	24
N	35	#6	7'-7"	399
P	24	#5	6'-1"	152
R	12	#4	11'-9"	94
S	108	#5	19'-3"	2,168
SS	68	#6	20'-6"	2,093
T1	14	#6	27'-1"	569
T2	8	#6	29'-1"	349
U	14	#6	9'-0"	189
REINFORCING STEEL *			LB	10,928
CLASS "C" (MASS) CONC (BENT)			CY	41.4

* FOR CONTRACTOR'S INFORMATION ONLY

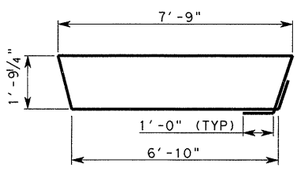

BARS SS

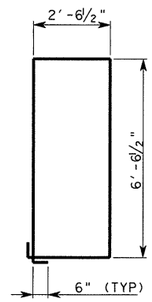

BARS S

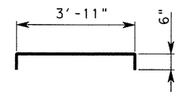

BARS E

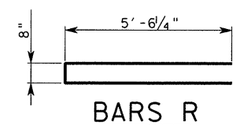

BARS R

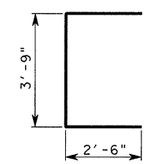

BARS U

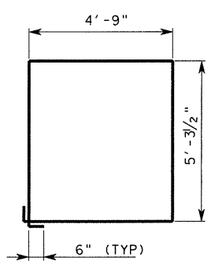

BARS Z1

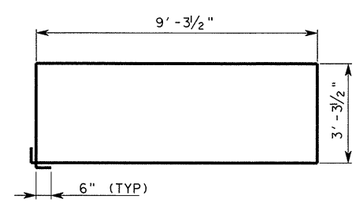

BARS Z2

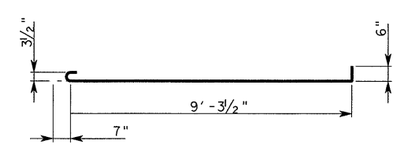

BARS J

HL-93 LOADING

STATE OF TEXAS
OSAMA A. SHAHAWY
88476
LICENSED PROFESSIONAL ENGINEER
6/7/11

REV. No.	DATE	REVISION	BY
△			
△			
△			

PBSJ an Atkins company TBPE REG. # F-474

Texas Department of Transportation Austin District

©2011 by TxDOT

SH 45 / O'CONNOR DRIVE RAMP EAST-SOUTH DC BENTS 8 AND 9

SCALE: NTS — SHEET 10 OF 20

DESIGNED: RBR	FED. RD DIV. No.	STATE	PROJECT No.			HIGHWAY No.
CHECKED: OAS	6	TEXAS				LP 1/SH 45
DRAWN: JF	STATE DISTRICT	COUNTY	CONTROL No.	SECTION No.	JOB No.	SHEET No.
CHECKED: OAS	AUSTIN	WILLIAMSON	0683	06	027	395

REV. 6/29/11

PLOT DRIVER: RD*11x17*PDF.plt
PEN TABLE: plotordr*ocon.tbl
FILE: r:\trans-design\o'connor\cadd\bdg\R-DCES\0C45BTresdc10.dgn
DATE: 6/2/2011 TIME: 11:56:31 PM

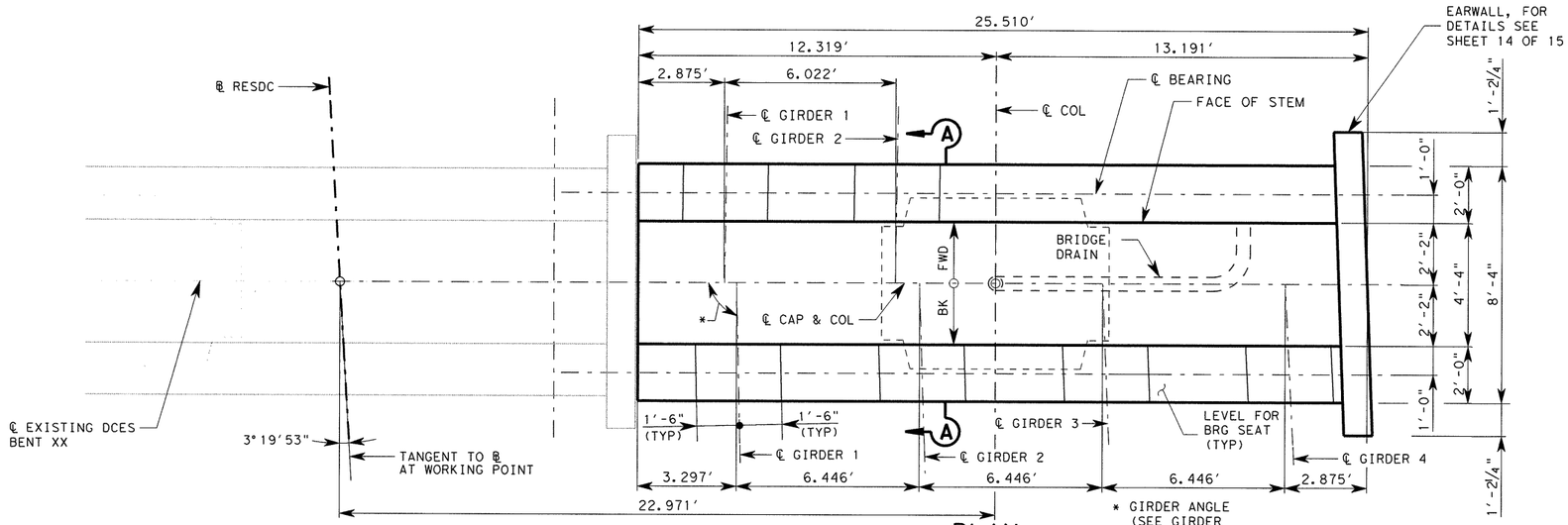

PLAN

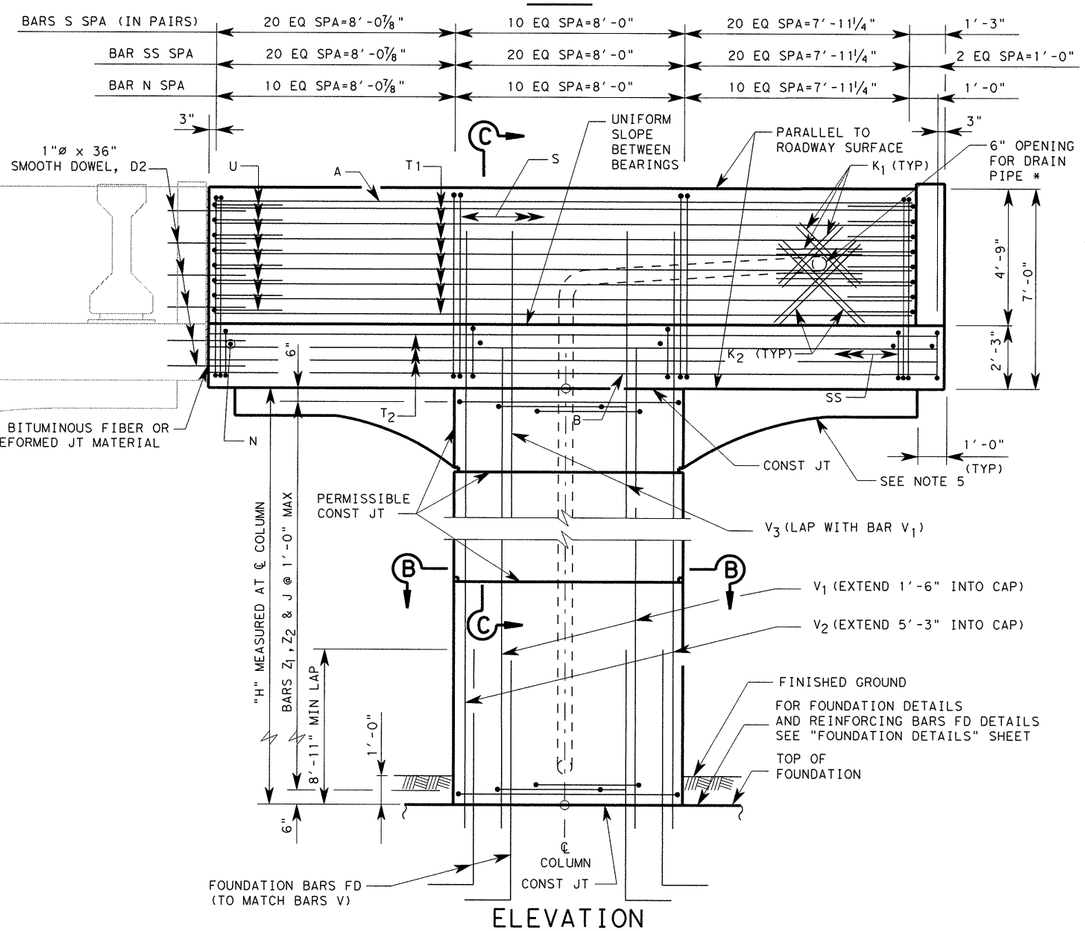

ELEVATION

* ADJUST STIRRUPS TO CLEAR PIPE.

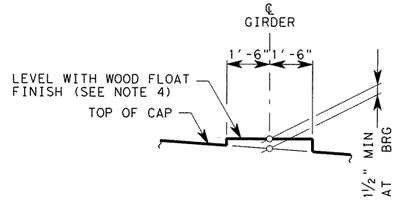

BEARING SEAT ELEVATION

GENERAL NOTES:

1. DESIGNED ACCORDING TO AASHTO LRFD BRIDGE SPECIFICATIONS, 4TH EDITION 2007 AND 2009 CURRENT INTERIM'S FOR HL-93 LOADING.
2. CONCRETE STRENGTH F'C=3600 PSI.
3. ALL REINFORCING SHALL BE GRADE 60.
4. BEARING SURFACE SHALL BE CLEAN AND FREE OF ALL LOOSE MATERIAL BEFORE PLACING BEARING PAD.
5. SEE "AESTHETIC TREATMENT REINFORCEMENT DETAILS" SHEET FOR ARCH REINFORCEMENT AND AESTHETIC REVEAL DETAIL.

STATE OF TEXAS
OSAMA A. SHAHAWY
88476
LICENSED PROFESSIONAL ENGINEER
4/11/11

HL-93 LOADING

REV. No.	DATE	REVISION	BY
△			
△			
△			

PBSJ an Atkins company TBPE REG. # F-474

Texas Department of Transportation
Austin District

©2011 by TxDOT

SH 45 / O'CONNOR DRIVE RAMP EAST-SOUTH DC BENT 10

SCALE: NTS

SHEET 11 OF 20

DESIGNED: RBR	FED. RD DIV. No.	STATE	PROJECT No.			HIGHWAY No.
CHECKED: OAS	6	TEXAS				LP 1/SH 45
DRAWN: JF	STATE DISTRICT	COUNTY	CONTROL No.	SECTION No.	JOB No.	SHEET No.
CHECKED: OAS	AUSTIN	WILLIAMSON	0683	06	027	396

PLOT DRIVER: RD*11x17*PDF.plt
PEN TABLE: plotordr*ocon.tbl
FILE: r:\trans-design\o'connor\cadd\bdg\R-DCES\OC45BTresdc11.dgn
DATE: 4/11/2011 TIME: 10:36:23 AM

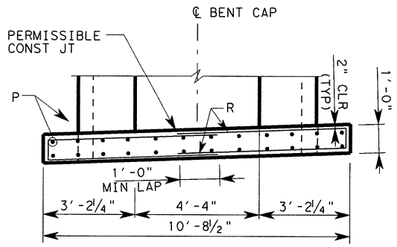

PLAN

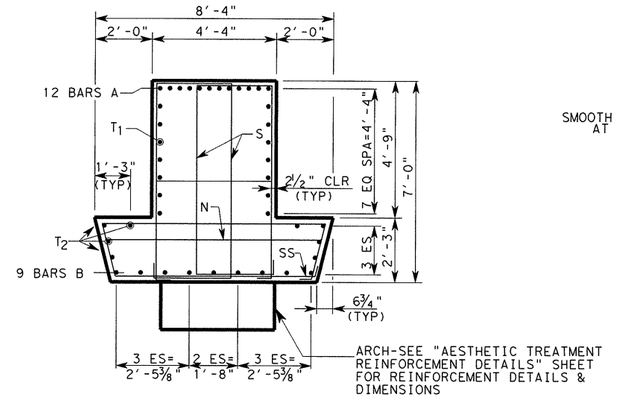

SECTION A-A

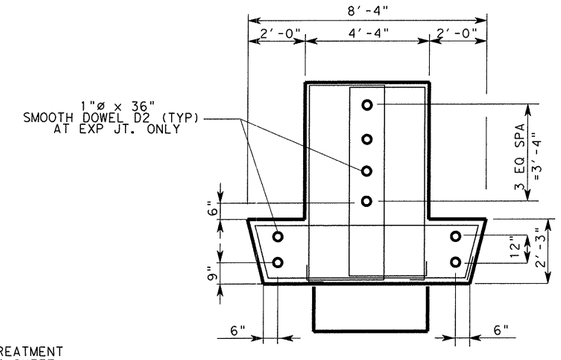

DOWEL TYPICAL DETAIL

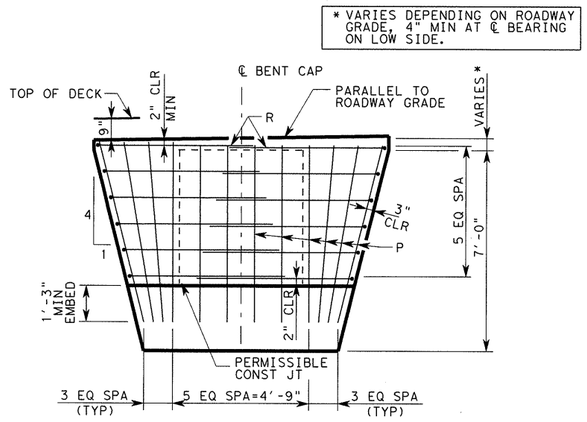

ELEVATION

EARWALL DETAIL

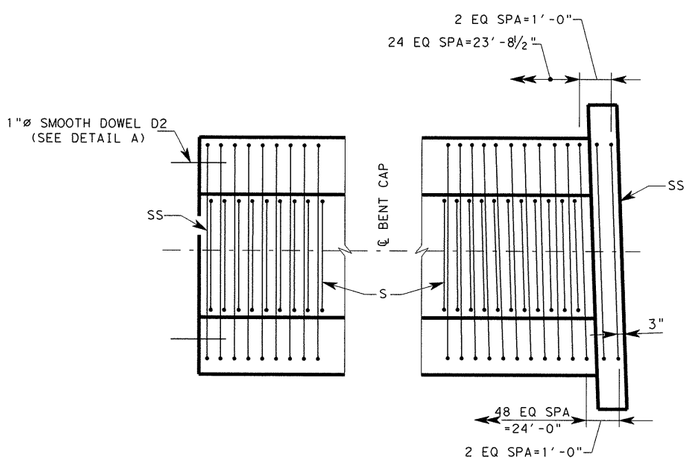

END CAP DETAIL

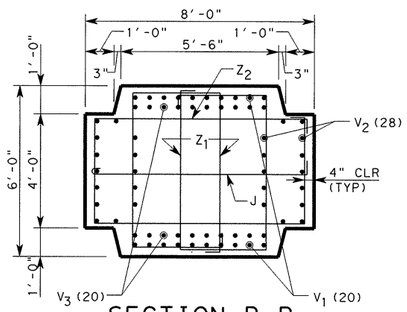

SECTION B-B

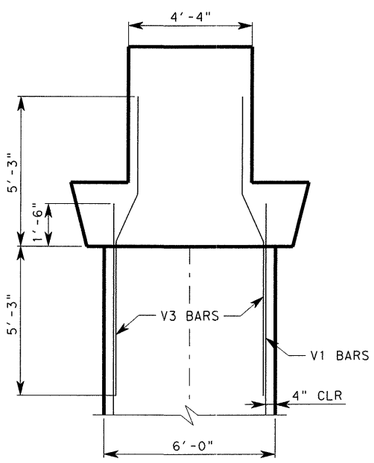

SECTION C-C

(CAP REINFORCEMENT NOT SHOWN FOR CLARITY)

HL-93 LOADING

STATE OF TEXAS
OSAMA A. SHAHAWY
88476
LICENSED PROFESSIONAL ENGINEER
4/11/11

REV. No.	DATE	REVISION	BY
△			
△			
△			

PBSJ an Atkins company TBPE REG. # F-474

Texas Department of Transportation Austin District

©2011 by TxDOT

SH 45 / O'CONNOR DRIVE RAMP EAST-SOUTH DC BENT 10

SCALE: NTS SHEET 12 OF 20

DESIGNED: RBR	FED. RD DIV. No.	STATE	PROJECT No.			HIGHWAY No.
CHECKED: OAS	6	TEXAS				LP 1/SH 45
DRAWN: JF	STATE DISTRICT	COUNTY	CONTROL No.	SECTION No.	JOB No.	SHEET No.
CHECKED: OAS	AUSTIN	WILLIAMSON	0683	06	027	397

PLOT DRIVER: RD*11x17*PDF.plt
PEN TABLE: plotordr*ocon.tbl
FILE: r:\trans-design\o'connor\cadd\bdg\R-DCES\0C45BTresde12.dgn
DATE: 4/11/2011 TIME: 10:36:24 AM

① TABLE OF VARIABLES COLUMN QUANTITIES

COL (BENT 10)	COLUMN HEIGHT "H"	BARS V_1 #11 NO.	BARS V_1 #11 LENGTH	BARS V_1 #11 WEIGHT (LB)	BARS V_2 #11 NO.	BARS V_2 #11 LENGTH	BARS V_2 #11 WEIGHT (LB)	BARS V_3 #8 NO.	BARS V_3 #8 LENGTH	BARS V_3 #8 WEIGHT (LB)	BARS Z_1 #5 19'-2" NO.	BARS Z_1 #5 19'-2" WEIGHT (LB)	BARS Z_2 #5 22'-4" NO.	BARS Z_2 #5 22'-4" WEIGHT (LB)	BARS J #4 10'-5" NO.	BARS J #4 10'-5" WEIGHT (LB)	TOTAL ESTIMATED ② QUANTITIES PER COLUMN: REINF STEEL * LB	TOTAL ESTIMATED ② QUANTITIES PER COLUMN: CLASS "C" (MASS) CONC (BENT) CY
1	22	20	23'-6"	2497	28	27'-3"	4054	20	10'-6"	561	44	880	22	512	22	153	8657	35.5

* FOR CONTRACTOR'S INFORMATION ONLY

① ADJUST BARS V_1 AND V_2 LENGTHS BY 1 FT, NUMBER OF BARS Z_2 AND J BY 1, AND NUMBER OF BARS Z_1 BY 2 FOR EACH 1 LF VARIATION IN "H" VALUE.

② ESTIMATED QUANTITIES ARE BASED ON HEIGHT SHOWN ON BRIDGE LAYOUT.

TABLE OF ETIMATED QUANTITIES (BENT CAP)

BAR	NO.	SIZE	LENGTH	WEIGHT
A	12	#11	23'-2"	1,478
B	9	#11	25'-2"	1,204
K1	8	#6	3'-0"	36
K2	4	#6	4'-0"	24
N	30	#6	7'-7"	342
P	24	#5	6'-1"	152
R	12	#4	11'-9"	94
S	90	#5	19'-3"	1,807
SS	59	#6	20'-6"	1,816
T1	14	#6	23'-2"	487
T2	8	#6	25'-2"	303
U	14	#6	9'-0"	189
REINFORCING STEEL *			LB	7,931
CLASS "C" (MASS) CONC (BENT)			CY	35.9

* FOR CONTRACTOR'S INFORMATION ONLY

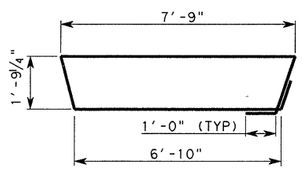

BARS SS

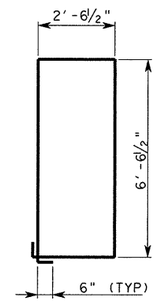

BARS S

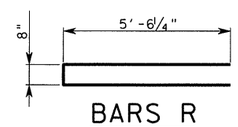

BARS R

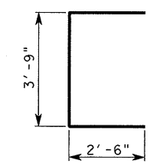

BARS U

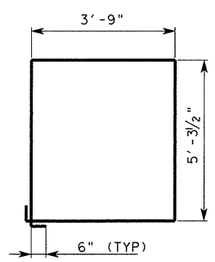

BARS Z1

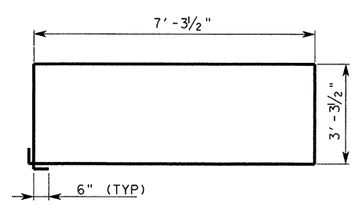

BARS Z2

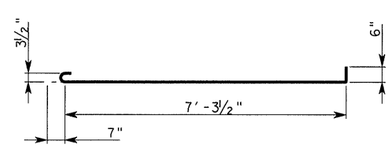

BARS J

HL-93 LOADING

STATE OF TEXAS
OSAMA A. SHAHAWY
88476
LICENSED
PROFESSIONAL ENGINEER
6/7/11

REV. No.	DATE	REVISION	BY
△			
△			
△			

PBSJ an Atkins company TBPE REG. # F-474

Texas Department of Transportation Austin District

©2011 by TxDOT

SH 45 / O'CONNOR DRIVE RAMP EAST-SOUTH DC BENT 10

SCALE: NTS

DESIGNED: RBR	FED. RD DIV. No.	STATE	PROJECT No.			HIGHWAY No.	
CHECKED: OAS	6	TEXAS				LP 1/SH 45	
DRAWN: JF	STATE DISTRICT	COUNTY	CONTROL No.	SECTION No.	JOB No.	SHEET No.	
CHECKED: OAS	AUSTIN	WILLIAMSON	0683	06	027	398	

Rev. 6/29/11

PLOT DRIVER: RD*11x17*PDF.plt
PEN TABLE: plotordr*ocon.tbl
FILE: r:\trans-design\o'connor\cadd\bdg\R-DCES\OC45BTresdc13.dgn
DATE: 6/2/2011 TIME: 1:56:33 PM

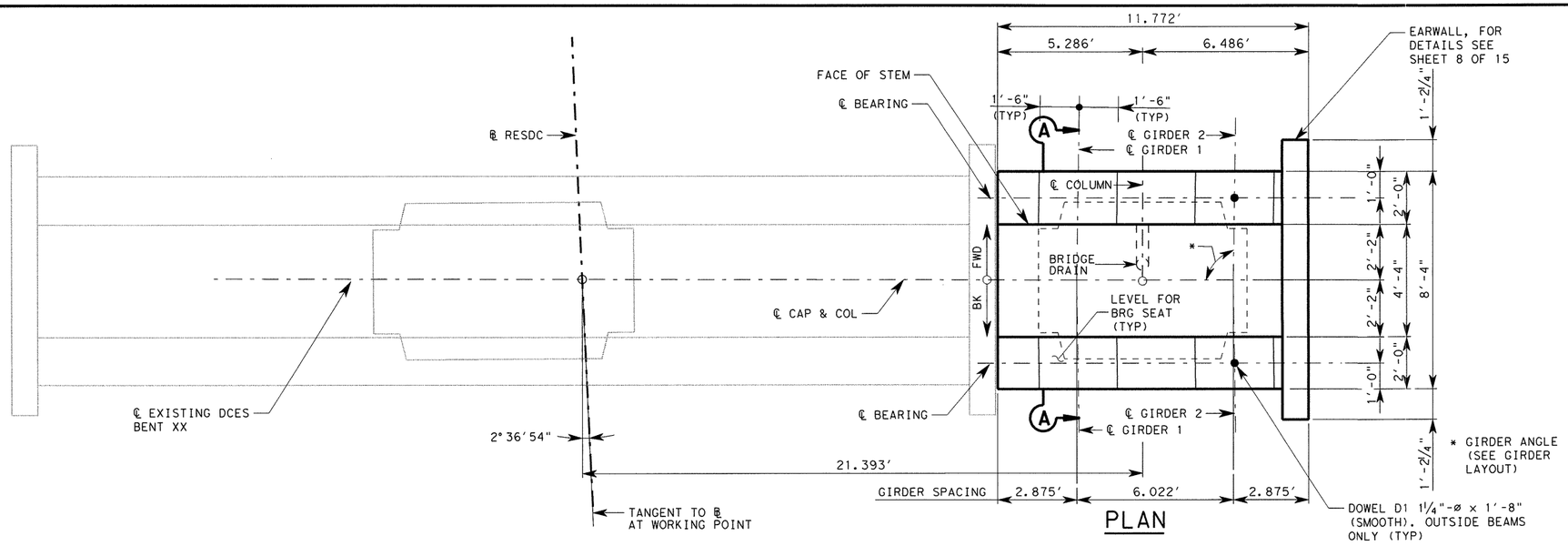

PLAN

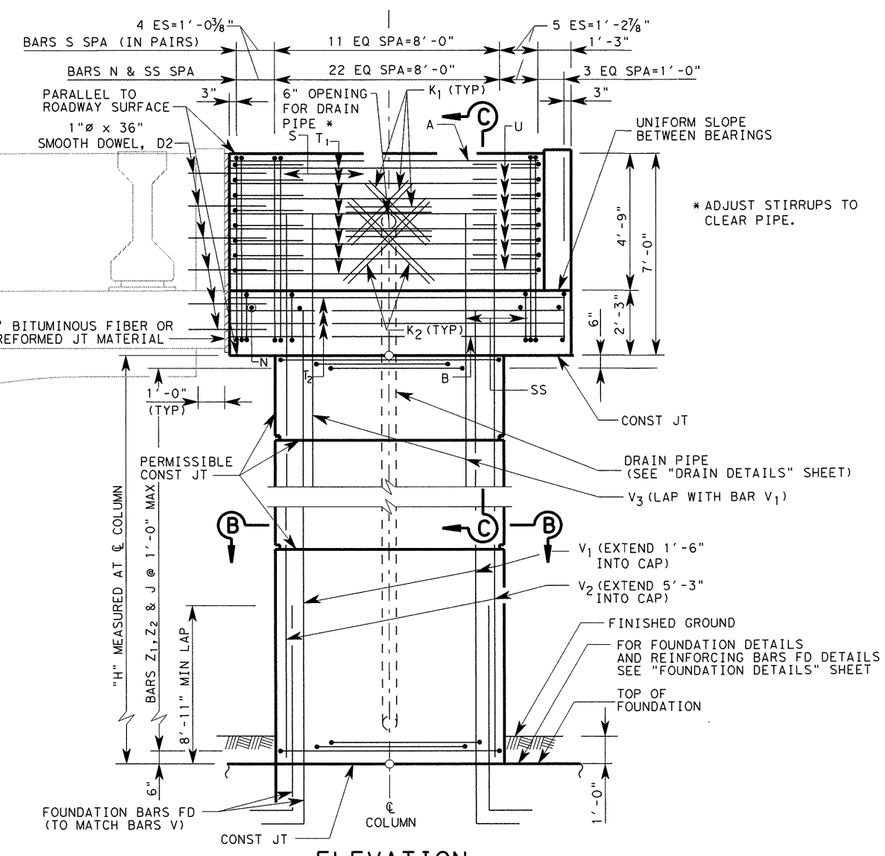

ELEVATION

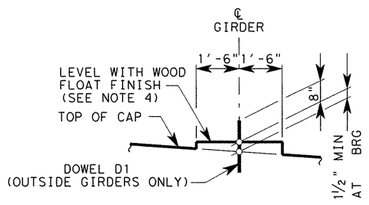

BEARING SEAT ELEVATION

GENERAL NOTES:

1. DESIGNED ACCORDING TO AASHTO LRFD BRIDGE SPECIFICATIONS, 4TH EDITION 2007 AND 2009 CURRENT INTERIM'S FOR HL-93 LOADING.
2. CONCRETE STRENGTH F'C=5000 PSI.
3. ALL REINFORCING SHALL BE GRADE 60.
4. BEARING SURFACE SHALL BE CLEAN AND FREE OF ALL LOOSE MATERIAL BEFORE PLACING BEARING PAD.
5. SEE "AESTHETIC TREATMENT REINFORCEMENT DETAILS" SHEET FOR ARCH REINFORCEMENT AND AESTHETIC REVEAL DETAIL.
6. SKEW ANGLES MEASURED NORMAL TO LOCAL TANGENT IF ON CURVE.

HL-93 LOADING

STATE OF TEXAS
OSAMA A. SHAHAWY
88476
LICENSED PROFESSIONAL ENGINEER
4/11/11

REV. No.	DATE	REVISION	BY
△			
△			
△			

PBSJ an Atkins company TBPE REG. # F-474

Texas Department of Transportation Austin District
©2011 by TxDOT

SH 45 / O'CONNOR DRIVE RAMP EAST-SOUTH DC BENT 11

SCALE: NTS SHEET 14 OF 20

DESIGNED: RBR	FED. RD DIV. No.	STATE	PROJECT No.		HIGHWAY No.	
CHECKED: OAS	6	TEXAS			LP 1/SH 45	
DRAWN: JF	STATE DISTRICT	COUNTY	CONTROL No.	SECTION No.	JOB No.	SHEET No.
CHECKED: OAS	AUSTIN	WILLIAMSON	0683	06	027	399

DATE: 4/11/2011 TIME: 10:36:26 AM
PLOT DRIVER: RD*11x17*PDF.plt
PEN TABLE: plotordr*occon.tbl
FILE: r:\trans-design\o'connor\cadd\bdg\R-DCES\0C45BTresdc14.dgn

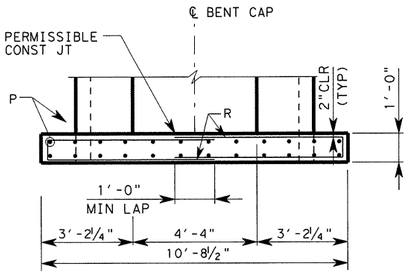

PLAN

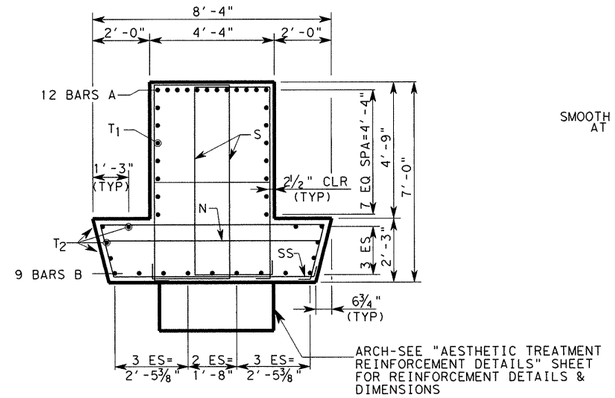

SECTION A-A

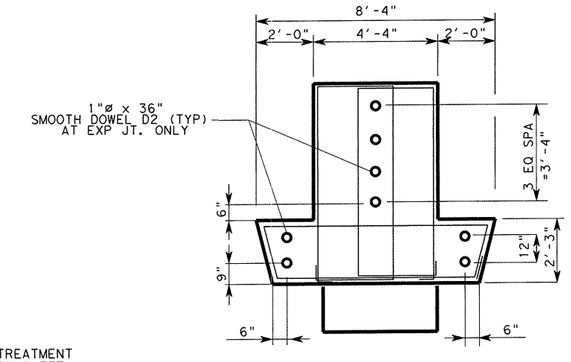

DOWEL TYPICAL DETAIL

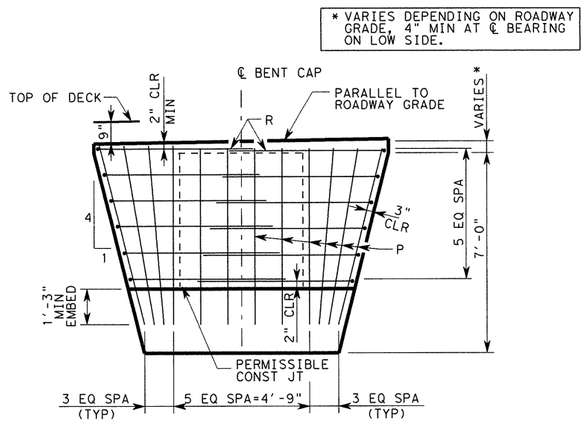

ELEVATION

EARWALL DETAIL

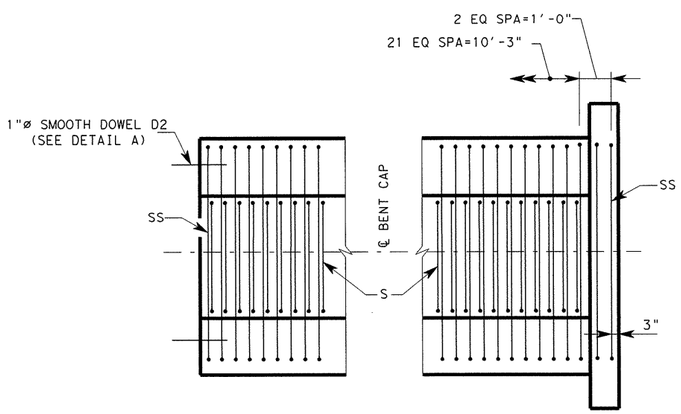

END CAP DETAIL

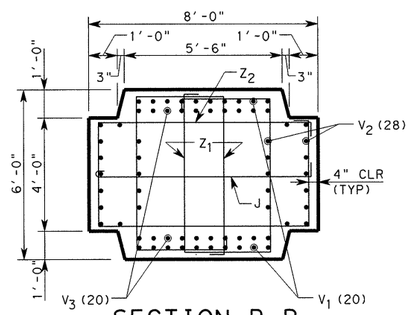

SECTION B-B

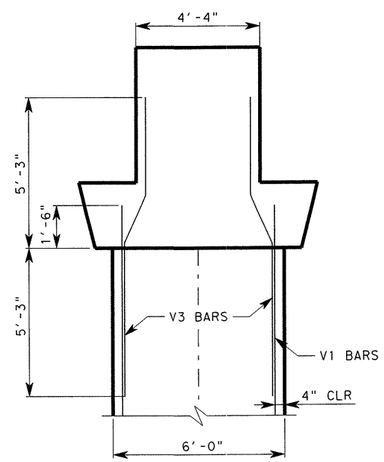

SECTION C-C

(CAP REINFORCEMENT NOT SHOWN FOR CLARITY)

HL-93 LOADING

STATE OF TEXAS
OSAMA A. SHAHAWY
88476
LICENSED PROFESSIONAL ENGINEER
4/11/11

REV. No.	DATE	REVISION	BY
△			
△			
△			

PBSJ an Atkins company TBPE REG. # F-474

Texas Department of Transportation Austin District

©2011 by TxDOT

SH 45 / O'CONNOR DRIVE RAMP EAST-SOUTH DC BENT 11

SCALE: NTS

SHEET 15 OF 20

DESIGNED: RBR	FED. RD DIV. No.	STATE	PROJECT No.			HIGHWAY No.
CHECKED: OAS	6	TEXAS				LP 1/SH 45
DRAWN: JF	STATE DISTRICT	COUNTY	CONTROL No.	SECTION No.	JOB No.	SHEET No.
CHECKED: OAS	AUSTIN	WILLIAMSON	0683	06	027	400

DATE: 4/11/2011 TIME: 10:36:28 AM
PLOT DRIVER: RD*11x17*PDF.plt
PEN TABLE: plotfordr*ocon.tbl
FILE: r:\trans-design\o'connor\cadd\bdg\R-DCES\OC45BTresdc15.dgn

① TABLE OF VARIABLES COLUMN QUANTITIES

COL	COLUMN HEIGHT "H"	BARS V_1 #11 NO.	BARS V_1 #11 LENGTH	BARS V_1 #11 WEIGHT (LB)	BARS V_2 #11 NO.	BARS V_2 #11 LENGTH	BARS V_2 #11 WEIGHT (LB)	BARS V_3 #8 NO.	BARS V_3 #8 LENGTH	BARS V_3 #8 WEIGHT (LB)	BARS Z_1 #5 19'-2" NO.	BARS Z_1 WEIGHT (LB)	BARS Z_2 #5 22'-4" NO.	BARS Z_2 WEIGHT (LB)	BARS J #4 10'-5" NO.	BARS J WEIGHT (LB)	TOTAL ESTIMATED ② QUANTITIES PER COLUMN: REINF STEEL * LB	TOTAL ESTIMATED ② QUANTITIES PER COLUMN: CLASS "C" (MASS) CONC (BENT) CY
1	23	20	24'-6"	2603	28	28'-3"	4203	20	10'-6"	561	46	1016	23	536	23	160	9079	37.1

* FOR CONTRACTOR'S INFORMATION ONLY

① ADJUST BARS V_1 AND V_2 LENGTHS BY 1 FT, NUMBER OF BARS Z_2 AND J BY 1, AND NUMBER OF BARS Z_1 BY 2 FOR EACH 1 LF VARIATION IN "H" VALUE.

② ESTIMATED QUANTITIES ARE BASED ON HEIGHT SHOWN ON BRIDGE LAYOUT.

TABLE OF ETIMATED QUANTITIES (BENT CAP)

BAR	NO.	SIZE	LENGTH	WEIGHT
A	12	#11	9'-5"	602
B	9	#11	11'-5"	547
D	2	1 1/4 "DIA	1'-8"	14
K1	8	#6	3'-0"	36
K2	4	#6	4'-0"	24
N	14	#6	7'-7"	159
P	24	#5	6'-1"	152
R	12	#4	11'-9"	94
S	29	#5	19'-3"	586
SS	26	#6	20'-6"	800
T1	14	#6	9'-5"	198
T2	8	#6	11'-5"	137
U	14	#6	9'-0"	189
REINFORCING STEEL *			LB	3,540
CLASS "C" (MASS) CONC (BENT)			CY	16.6

* FOR CONTRACTOR'S INFORMATION ONLY

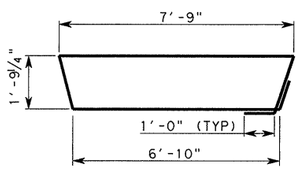

BARS SS

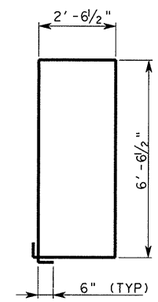

BARS S

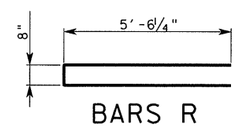

BARS R

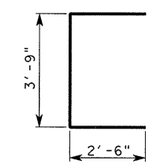

BARS U

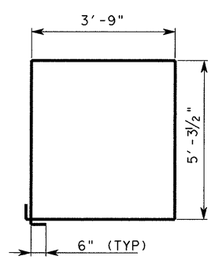

BARS Z1

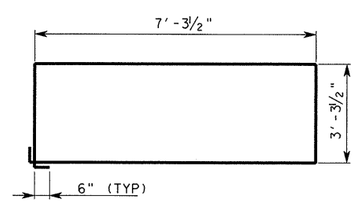

BARS Z2

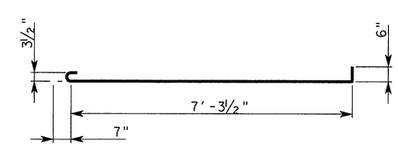

BARS J

HL-93 LOADING

STATE OF TEXAS
OSAMA A. SHAHAWY
88476
LICENSED PROFESSIONAL ENGINEER
6/7/11

REV. No.	DATE	REVISION	BY
△			
△			
△			

PBSJ an Atkins company TBPE REG. # F-474

Texas Department of Transportation Austin District

©2011 by TxDOT

SH 45 / O'CONNOR DRIVE RAMP EAST-SOUTH DC BENT 11

SCALE: NTS SHEET 16 OF 20

DESIGNED: RBR	FED. RD DIV. No.	STATE	PROJECT No.			HIGHWAY No.
CHECKED: OAS	6	TEXAS				LP 1/SH 45
DRAWN: JF	STATE DISTRICT	COUNTY	CONTROL No.	SECTION No.	JOB No.	SHEET No.
CHECKED: OAS	AUSTIN	WILLIAMSON	0683	06	027	401

Rev. 6/29/11

PLOT DRIVER: RD*11x17*PDF.plt
PEN TABLE: plotordr*ocon.tbl
FILE: r:\trans-design\o'connor\cadd\bdg\r-does\OC45BTresdc16.dgn
DATE: 6/2/2011 TIME: 1:56:35 PM

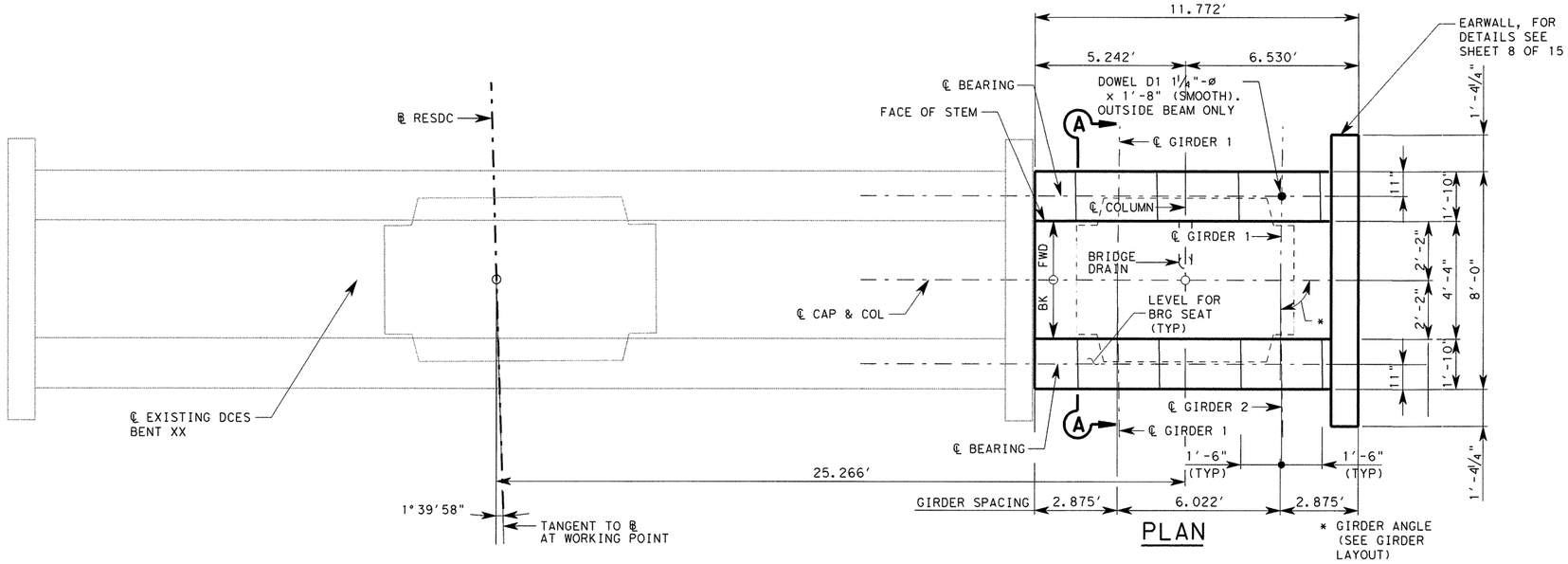

GENERAL NOTES:

1. DESIGNED ACCORDING TO AASHTO LRFD BRIDGE SPECIFICATIONS, 4TH EDITION 2007 AND 2009 CURRENT INTERIM'S FOR HL-93 LOADING.
2. CONCRETE STRENGTH F'C=5000 PSI.
3. ALL REINFORCING SHALL BE GRADE 60.
4. BEARING SURFACE SHALL BE CLEAN AND FREE OF ALL LOOSE MATERIAL BEFORE PLACING BEARING PAD.
5. SEE "AESTHETIC TREATMENT REINFORCEMENT DETAILS" SHEET FOR ARCH REINFORCEMENT AND AESTHETIC REVEAL DETAIL.
6. SKEW ANGLES MEASURED NORMAL TO LOCAL TANGENT IF ON CURVE.

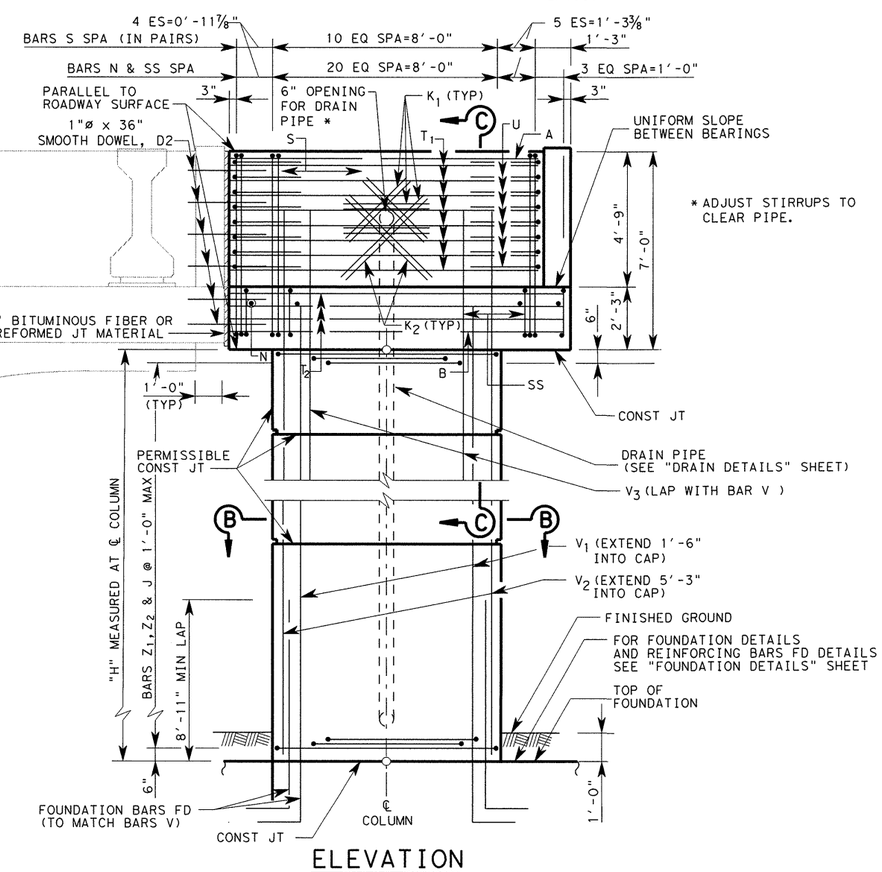

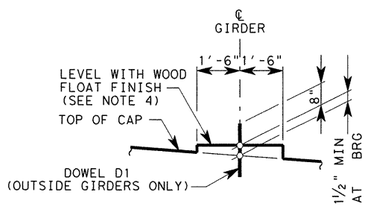

BEARING SEAT ELEVATION

HL-93 LOADING

STATE OF TEXAS
OSAMA A. SHAHAWY
88476
LICENSED PROFESSIONAL ENGINEER
4/11/11

REV. No.	DATE	REVISION	BY
△			
△			
△			

PBSJ an Atkins company TBPE REG. # F-474

Texas Department of Transportation
Austin District
©2011 by TxDOT

SH 45 / O'CONNOR DRIVE RAMP EAST-SOUTH DC BENT 12

SCALE: NTS — SHEET 17 OF 20

DESIGNED: RBR	FED. RD DIV. No.	STATE	PROJECT No.			HIGHWAY No.
CHECKED: OAS	6	TEXAS				LP 1/SH 45
DRAWN: JF	STATE DISTRICT	COUNTY	CONTROL No.	SECTION No.	JOB No.	SHEET No.
CHECKED: OAS	AUSTIN	WILLIAMSON	0683	06	027	402

PLOT DRIVER: RD*11x17*PDF.plt
PEN TABLE: plotordr*oon.tbl
FILE: r:\trans-design\o'connor\oadd\bdg\r-dcs\0C45BTresdc17.dgn
DATE: 4/11/2011 TIME: 10:36:30 AM

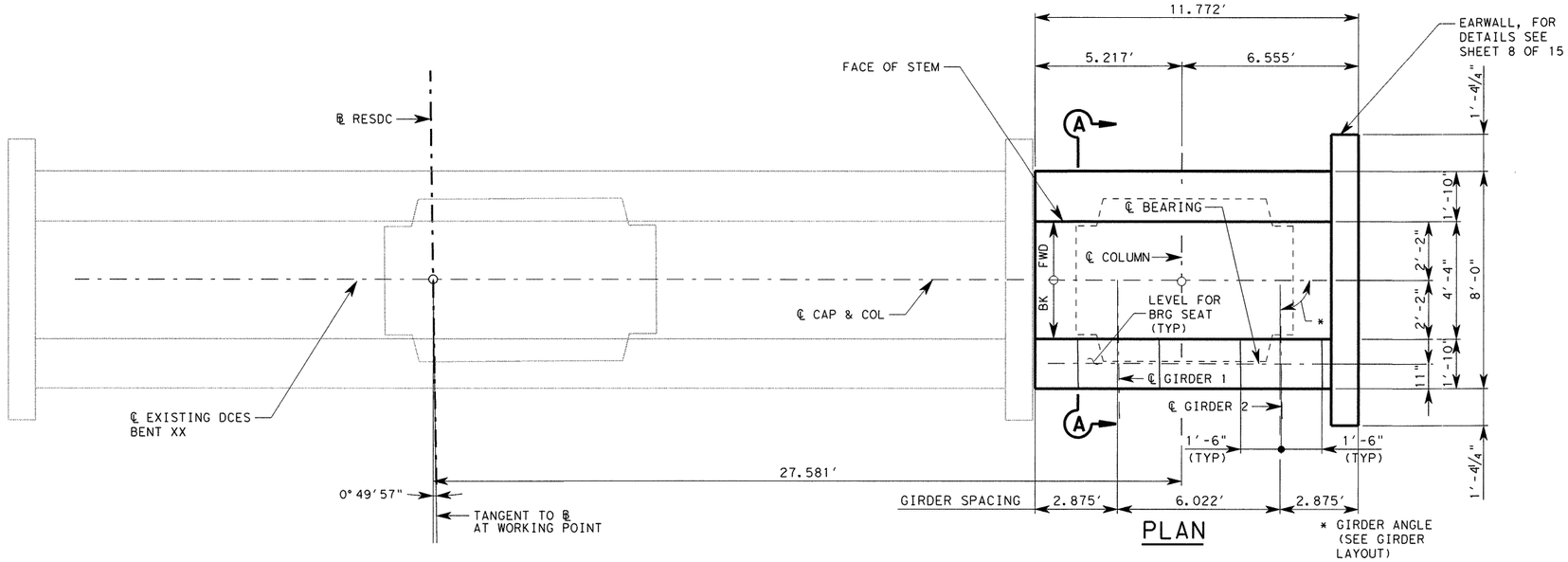

PLAN

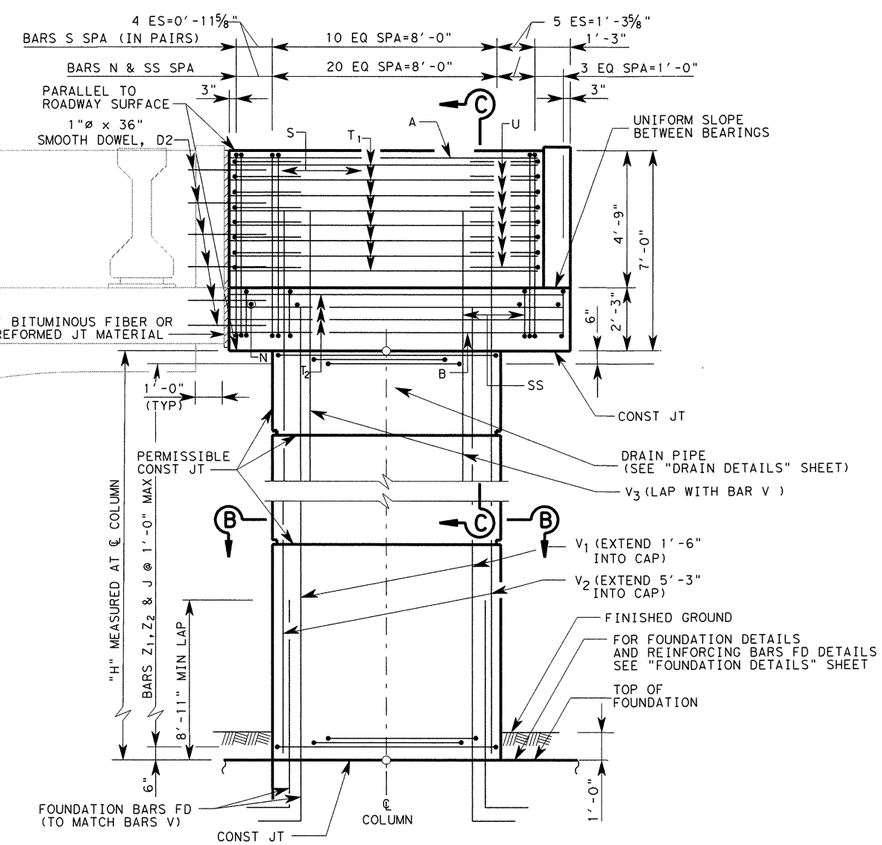

ELEVATION

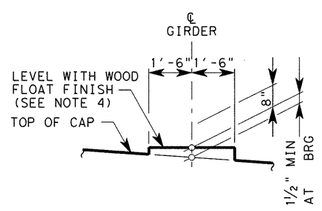

BEARING SEAT ELEVATION

GENERAL NOTES:

1. DESIGNED ACCORDING TO AASHTO LRFD BRIDGE SPECIFICATIONS, 4TH EDITION 2007 AND 2009 CURRENT INTERIM'S FOR HL-93 LOADING.
2. CONCRETE STRENGTH F'C=5000 PSI.
3. ALL REINFORCING SHALL BE GRADE 60.
4. BEARING SURFACE SHALL BE CLEAN AND FREE OF ALL LOOSE MATERIAL BEFORE PLACING BEARING PAD.
5. SEE "AESTHETIC TREATMENT REINFORCEMENT DETAILS" SHEET FOR ARCH REINFORCEMENT AND AESTHETIC REVEAL DETAIL.
6. SKEW ANGLES MEASURED NORMAL TO LOCAL TANGENT IF ON CURVE.

STATE OF TEXAS
OSAMA A. SHAHAWY
88476
LICENSED PROFESSIONAL ENGINEER
4/11/11

HL-93 LOADING

REV. No.	DATE	REVISION	BY
△			
△			
△			

PBSJ an Atkins company TBPE REG. # F-474

Texas Department of Transportation
Austin District
©2011 by TxDOT

SH 45 / O'CONNOR DRIVE RAMP EAST-SOUTH DC BENT 13

SCALE: NTS

SHEET 18 OF 20

DESIGNED: RBR	FED. RD DIV. No.	STATE	PROJECT No.			HIGHWAY No.
CHECKED: OAS	6	TEXAS				LP 1/SH 45
DRAWN: JF	STATE DISTRICT	COUNTY	CONTROL No.	SECTION No.	JOB No.	SHEET No.
CHECKED: OAS	AUSTIN	WILLIAMSON	0683	06	027	403

PLOT DRIVER: RD*11x17*PDF.plt
PEN TABLE: plotordr*ocon.tbl
FILE: r:\trans-design\o'connor\cadd\bdg\r-does\0C45Btresdc18.dgn
DATE: 4/11/2011 TIME: 10:36:32 AM

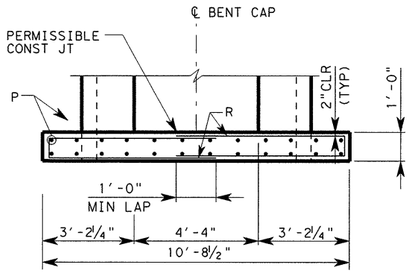

PLAN

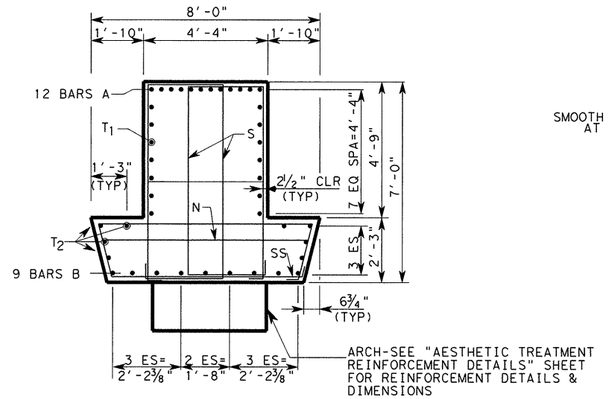

SECTION A-A

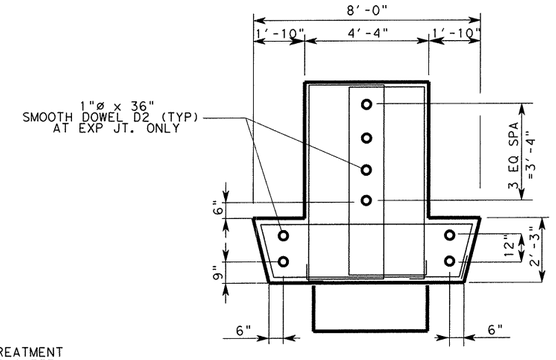

DOWEL TYPICAL DETAIL

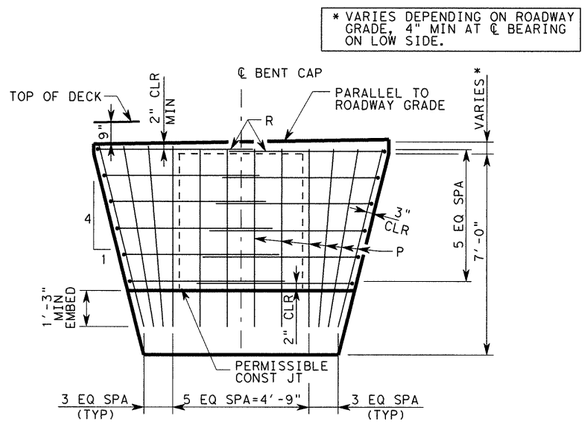

ELEVATION

EARWALL DETAIL

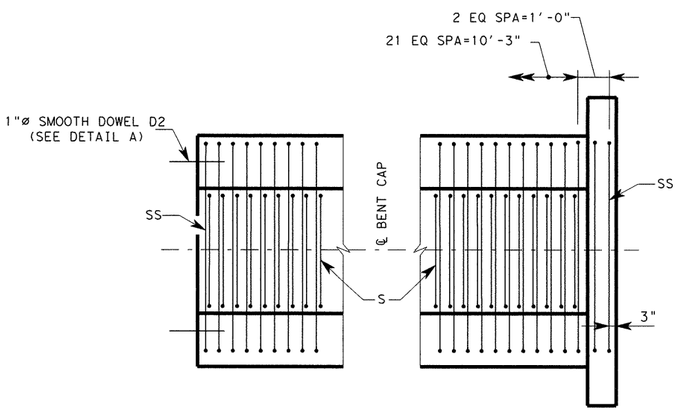

END CAP DETAIL

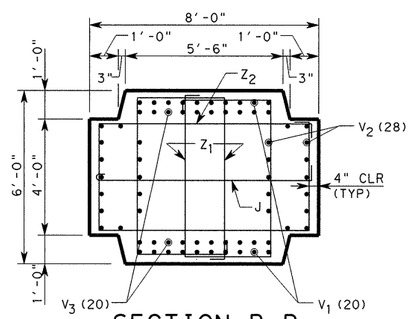

SECTION B-B

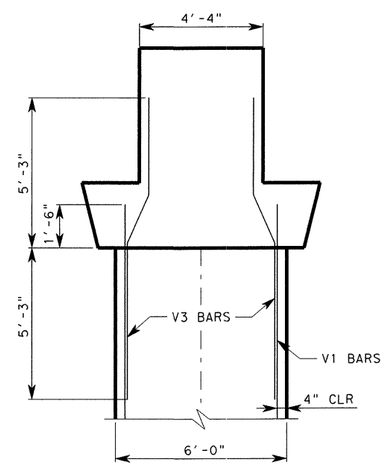

SECTION C-C

(CAP REINFORCEMENT NOT SHOWN FOR CLARITY)

HL-93 LOADING

STATE OF TEXAS
OSAMA A. SHAHAWY
88476
LICENSED PROFESSIONAL ENGINEER
4/11/11

REV. No.	DATE	REVISION	BY
△			
△			
△			

PBSJ an Atkins company TBPE REG. # F-474

Texas Department of Transportation
Austin District
©2011 by TxDOT

SH 45 / O'CONNOR DRIVE RAMP EAST-SOUTH DC BENTS 12 & 13

SCALE: NTS

SHEET 19 OF 20

DESIGNED: RBR	FED. RD DIV. No.	STATE	PROJECT No.			HIGHWAY No.
CHECKED: OAS	6	TEXAS				LP 1/SH 45
DRAWN: JF	STATE DISTRICT	COUNTY	CONTROL No.	SECTION No.	JOB No.	SHEET No.
CHECKED: OAS	AUSTIN	WILLIAMSON	0683	06	027	404

TIME: 10:36:33 AM
DATE: 4/11/2011
PLOT DRIVER: RD*11x17*PDF.plt
PEN TABLE: plotordr*ocon.tbl
FILE: r:\trans-design\o'connor\cadd\bdg\r-dces\0C45BTresdc19.dgn

① TABLE OF VARIABLES COLUMN QUANTITIES

COL (BENT 12)	COLUMN HEIGHT "H"	BARS V_1 #11 NO.	BARS V_1 #11 LENGTH	BARS V_1 #11 WEIGHT (LB)	BARS V_2 #11 NO.	BARS V_2 #11 LENGTH	BARS V_2 #11 WEIGHT (LB)	BARS V_3 #8 NO.	BARS V_3 #8 LENGTH	BARS V_3 #8 WEIGHT (LB)	BARS Z_1 #5 19'-2" NO.	BARS Z_1 #5 19'-2" WEIGHT (LB)	BARS Z_2 #5 22'-4" NO.	BARS Z_2 #5 22'-4" WEIGHT (LB)	BARS J #4 10'-5" NO.	BARS J #4 10'-5" WEIGHT (LB)	TOTAL ESTIMATED ② QUANTITIES PER COLUMN: REINF STEEL * LB	TOTAL ESTIMATED ② QUANTITIES PER COLUMN: CLASS "C" (MASS) CONC (BENT) CY
1	24	20	25'-6"	2710	28	29'-3"	4351	20	10'-6"	561	48	960	24	559	24	167	9308	38.7

COL (BENT 13)	COLUMN HEIGHT "H"	BARS V_1 #11 NO.	BARS V_1 #11 LENGTH	BARS V_1 #11 WEIGHT (LB)	BARS V_2 #11 NO.	BARS V_2 #11 LENGTH	BARS V_2 #11 WEIGHT (LB)	BARS V_3 #8 NO.	BARS V_3 #8 LENGTH	BARS V_3 #8 WEIGHT (LB)	BARS Z_1 #5 19'-2" NO.	BARS Z_1 #5 19'-2" WEIGHT (LB)	BARS Z_2 #5 22'-4" NO.	BARS Z_2 #5 22'-4" WEIGHT (LB)	BARS J #4 10'-5" NO.	BARS J #4 10'-5" WEIGHT (LB)	REINF STEEL * LB	CLASS "C" (MASS) CONC (BENT) CY
1	26	20	27'-6"	2922	28	31'-3"	4649	20	10'-6"	561	52	1039	26	606	26	181	9958	44.9

* FOR CONTRACTOR'S INFORMATION ONLY

① ADJUST BARS V_1 AND V_2 LENGTHS BY 1 FT, NUMBER OF BARS Z_2 AND J BY 1, AND NUMBER OF BARS Z_1 BY 2 FOR EACH 1 LF VARIATION IN "H" VALUE.

② ESTIMATED QUANTITIES ARE BASED ON HEIGHT SHOWN ON BRIDGE LAYOUT.

TABLE OF ETIMATED QUANTITIES (BENT CAP 12)

BAR	NO.	SIZE	LENGTH	WEIGHT
A	12	#11	9'-5"	602
B	9	#11	11'-5"	547
D	2	1 1/4 "DIA	1'-8"	14
K1	8	#6	3'-0"	36
K2	4	#6	4'-0"	24
N	14	#6	7'-7"	159
P	24	#5	6'-1"	152
R	12	#4	11'-9"	94
S	29	#5	19'-3"	586
SS	26	#6	20'-6"	800
T1	14	#6	9'-5"	198
T2	8	#6	11'-5"	137
U	14	#6	9'-0"	189
REINFORCING STEEL *			LB	3,540
CLASS "C" (MASS) CONC (BENT)			CY	16.6

* FOR CONTRACTOR'S INFORMATION ONLY

TABLE OF ETIMATED QUANTITIES (BENT CAP 13)

BAR	NO.	SIZE	LENGTH	WEIGHT
A	12	#11	9'-5"	602
B	9	#11	11'-5"	547
N	14	#6	7'-7"	159
P	24	#5	6'-1"	152
R	12	#4	11'-9"	94
S	29	#5	19'-3"	586
SS	26	#6	20'-6"	800
T1	14	#6	9'-5"	198
T2	8	#6	11'-5"	137
U	14	#6	9'-0"	189
REINFORCING STEEL *			LB	3,466
CLASS "C" (MASS) CONC (BENT)			CY	16.6

* FOR CONTRACTOR'S INFORMATION ONLY

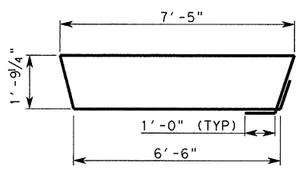

BARS SS

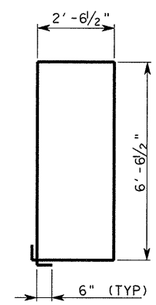

BARS S

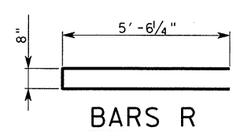

BARS R

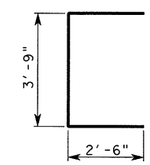

BARS U

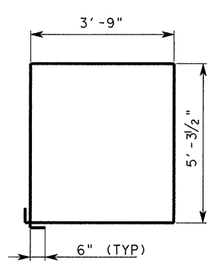

BARS Z1

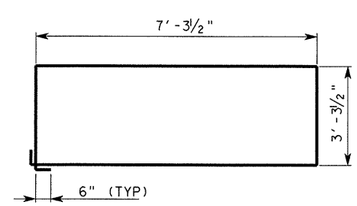

BARS Z2

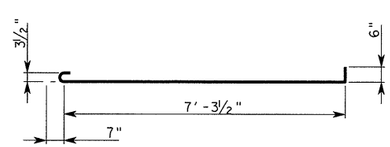

BARS J

HL-93 LOADING

STATE OF TEXAS
OSAMA A. SHAHAWY
88476
LICENSED PROFESSIONAL ENGINEER
6/7/11

REV. No.	DATE	REVISION	BY
△			
△			
△			

PBSJ an Atkins company TBPE REG. # F-474

Texas Department of Transportation
Austin District
©2011 by TxDOT

SH 45 / O'CONNOR DRIVE RAMP EAST-SOUTH DC BENTS 12 AND 13

SCALE: NTS

SHEET 20 OF 20

DESIGNED: RBR	FED. RD DIV. No.	STATE	PROJECT No.			HIGHWAY No.	
CHECKED: OAS	6	TEXAS				LP 1/SH 45	
DRAWN: JF	STATE DISTRICT	COUNTY	CONTROL No.	SECTION No.	JOB No.	SHEET No.	
CHECKED: OAS	AUSTIN	WILLIAMSON	0683	06	027	405	

Rev. 6/29/11

DATE: 6/2/2011 TIME: 1:56:36 PM
PLOT DRIVER: RD*11x17*PDF.plt
PEN TABLE: plotordr*ocon.tbl
FILE: r:\trans-design\o'connor\cadd\bdgvr-dces\OC45BTresdc20.dgn

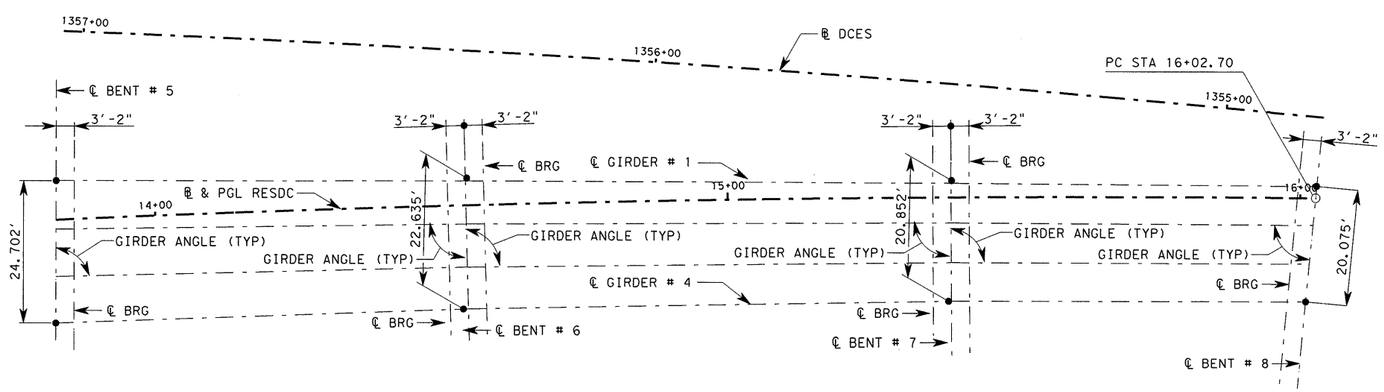

SPAN # 5
(TY Tx54 GIRDERS)

SPAN # 6
(TY Tx54 GIRDERS)

SPAN # 7
(TY Tx54 GIRDERS)

BENT REPORT

Bent 5 N 1° 15' 40.00" W
Distance between Station Line and Girder 1 6.7180 L

		Girder Spancin (C.L. Bent	Beam Angle D	M	S
Span 5	Beam 1	0.000	89	31	55
	Beam 2	8.234	88	59	32
	Beam 3	8.234	88	27	20
	Beam 4	8.234	87	25	21
	Total	24.702			

Bent 6 N 2 52' 23.63" W
Distance between Station Line and Girder 1 4.6760 L

		Girder Spancing (C.L. Bent	Beam Angle D	M	S
Span 5	Beam 1	0.000	91	08	39
	Beam 2	7.560	90	36	15
	Beam 3	7.560	90	04	04
	Beam 4	7.560	89	32	05
	Total	22.680			

Bent 6 N 2 52' 23.63" W
Distance between Station Line and Girder 1 4.6760 L

		Girder Spancing (C.L. Bent	Beam Angle D	M	S
Span 6	Beam 1	0	91	49	16
	Beam 2	7.560	91	24	40
	Beam 3	7.560	90	59	58
	Beam 4	7.560	90	35	11
	Total	22.680			

Bent 7 N 1 42' 01.67" W
Distance between Station Line and Girder 1 2.848 L

		Girder Spancing (C.L. Bent	Beam Angle D	M	S
Span 6	Beam 1	0.000	90	38	54
	Beam 2	6.951	90	14	18
	Beam 3	6.951	89	49	36
	Beam 4	6.951	89	24	49
	Total	20.853			

Bent 7 N 1 42' 01.67" W
Distance between Station Line and Girder 1 2.848 L

		Girder Spancing (C.L. Bent	Beam Angle D	M	S
Span 7	Beam 1	0	91	12	50
	Beam 2	6.951	90	47	38
	Beam 3	6.951	90	42	05
	Beam 4	6.951	90	26	12
	Total	20.853			

Bent 8 N 4 09' 50.00" E
Distance between Station Line and Girder 1 1.988 L

		Girder Spancing (C.L. Bent	Beam Angle D	M	S
Span 7	Beam 1	0.000	85	20	58
	Beam 2	6.692	85	05	46
	Beam 3	6.692	84	50	14
	Beam 4	6.692	84	34	21
	Total	20.076			

GIRDER REPORT

Beam Reprt Span 5

	Horizontal Distance C-C Bent	C-C Bearing	True Distance Girder Bot. BM. FLG	Slope
Beam 1	71.441	78.107	66.608	0.0038
Beam 2	71.663	65.329	66.829	0.0026
Beam 3	71.891	65.556	67.056	0.0015
Beam 4	72.125	65.789	67.29	0.0003

Beam Reprt Span 6

	Horizontal Distance C-C Bent	C-C Bearing	True Distance Girder Bot. BM. FLG	Slope
Beam 1	84.785	78.45	79.953	0.0086
Beam 2	84.626	78.291	79.794	0.0078
Beam 3	84.471	78.137	79.639	0.0069
Beam 4	84.32	77.986	79.488	0.006

Beam Reprt Span 7

	Horizontal Distance C-C Bent	C-C Bearing	True Distance Girder Bot. BM. FLG	Slope
Beam 1	63.886	57.541	59.051	0.0157
Beam 2	63.197	56.851	58.361	0.0159
Beam 3	62.509	56.162	57.673	0.0161
Beam 4	61.822	55.474	56.985	0.0163

HL-93
LOADING

STATE OF TEXAS
OSAMA A. SHAHAWY
88476
LICENSED
PROFESSIONAL ENGINEER
4/11/11

REV. No.	DATE	REVISION	BY
△			
△			
△			

PBSJ
an Atkins company TBPE REG. # F-474

Texas Department of Transportation
Austin District
©2011 by TxDOT

SH 45 / O'CONNOR DRIVE RAMP EAST-SOUTH DC I-GIRDER LAYOUT (SPANS 5-7)

SCALE: 1"=25' SHEET 1 OF 3

DESIGNED: RBR	FED. RD DIV. No.	STATE	PROJECT No.			HIGHWAY No.	
CHECKED: OAS	6	TEXAS				LP 1/SH 45	
DRAWN: RBR	STATE DISTRICT	COUNTY	CONTROL No.	SECTION No.	JOB No.	SHEET No.	
CHECKED: OAS	AUSTIN	WILLIAMSON	0683	06	027	406	

DATE: 4/11/2011 TIME: 10:36:35 AM
PLOT DRIVER: RD*11x17*PDF.plt
PEN TABLE: plotordr*occon.tbl
FILE: r:\trans-design\o'connor\cadd\bdg\R-DCES\OC45GLresdc01.dgn

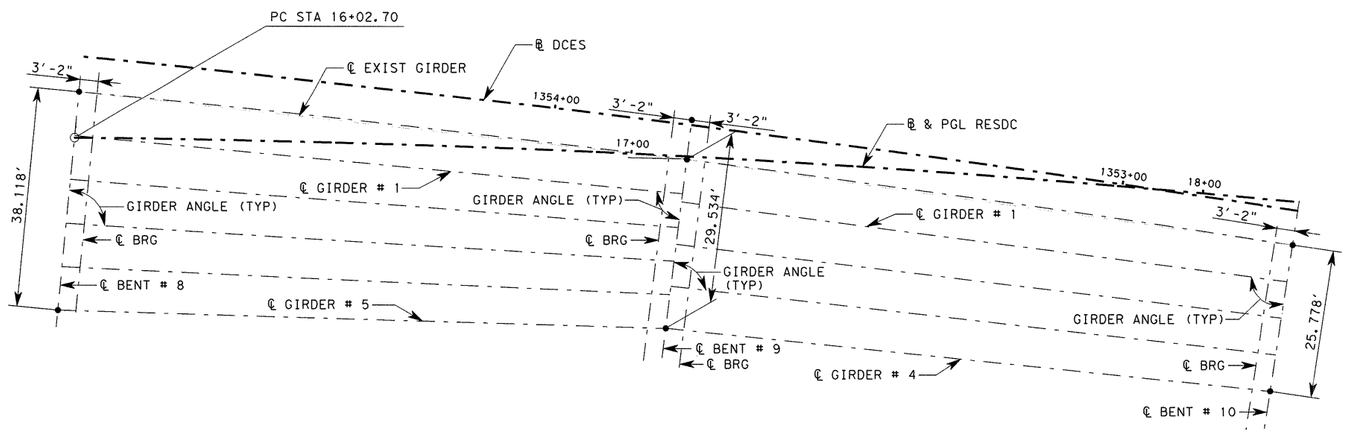

SPAN # 8
(TY Tx54 GIRDERS)

SPAN # 9
(TY Tx54 GIRDERS)

BENT REPORT

Bent 8 N 4° 09' 50.00" E
Distance between Station Line and Girder 1 0.3798 L

		Girder Spancing (C.L. Bent	D	M	S	Beam Angle
Span 8	Beam 1	0.000	89	53	01	
	Beam 2	7.624	88	57	38	
	Beam 3	7.624	88	02	07	
	Beam 4	7.624	87	06	29	
	Beam 5	7.624	86	10	46	
	Total	30.496				

Bent 9 N 5° 46' 08.00" E
Distance between Station Line and Girder 1 6.4261 R

		Girder Spancing (C.L. Bent	D	M	S	Beam Angle
Span 8	Beam 1	0.000	88	16	43	
	Beam 2	5.911	87	21	20	
	Beam 3	5.911	86	25	49	
	Beam 4	5.911	85	30	11	
	Beam 5	5.911	84	34	28	
	Total	23.644				

Bent 9 N 5° 46' 08.00" E
Distance between Station Line and Girder 1 7.8948 R

		Girder Spancing (C.L. Bent	D	M	S	Beam Angle
Span 9	Beam 1	0.000	90	17	53	
	Beam 2	7.383	89	47	35	
	Beam 3	7.383	89	17	10	
	Beam 4	7.383	88	46	40	
	Total	22.149				

Bent 10 N 7° 22' 26.00" E
Distance between Station Line and Girder 1 13.9493 R

		Girder Spancing (C.L. Bent	D	M	S	Beam Angle
Span 9	Beam 1	0.000	88	41	35	
	Beam 2	6.446	88	11	17	
	Beam 3	6.446	87	40	52	
	Beam 4	6.446	87	10	22	
	Total	19.338				

GIRDER REPORT

Beam Reprt Span 8

	Horizontal Distance C-C Bent	C-C Bearing	True Distance Girder Bot. BM. FLG	Slope
Beam 1	106.65	100.316	101.834	0.0186
Beam 2	106.502	100.165	101.686	0.0199
Beam 3	106.382	100.04	101.565	0.0212
Beam 4	106.289	99.942	101.471	0.0226
Beam 5	106.224	99.869	101.403	0.0239

Beam Reprt Span 9

	Horizontal Distance C-C Bent	C-C Bearing	True Distance Girder Bot. BM. FLG	Slope
Beam 1	106.641	100.307	101.846	0.0278
Beam 2	106.46	100.125	101.667	0.0286
Beam 3	106.287	99.951	101.495	0.0295
Beam 4	106.122	99.784	101.332	0.0304

HL-93 LOADING

STATE OF TEXAS
OSAMA A. SHAHAWY
88476
LICENSED
PROFESSIONAL ENGINEER
4/11/11

REV. No.	DATE	REVISION	BY
△			
△			
△			

PBSJ an Atkins company TBPE REG. # F-474

Texas Department of Transportation
Austin District
©2011 by TxDOT

SH 45 / O'CONNOR DRIVE RAMP EAST-SOUTH DC I-GIRDER LAYOUT (SPANS 8-9)

SCALE: 1"=25' SHEET 2 OF 3

DESIGNED: RBR	FED. RD DIV. No.	STATE	PROJECT No.			HIGHWAY No.	
CHECKED: OAS	6	TEXAS				LP 1/SH 45	
DRAWN: RBR	STATE DISTRICT	COUNTY	CONTROL No.	SECTION No.	JOB No.	SHEET No.	
CHECKED: OAS	AUSTIN	WILLIAMSON	0683	06	027	407	

DATE: 4/11/2011 TIME: 10:36:37 AM
PLOT DRIVER: RD*11x17*PDF.plt
PEN TABLE: plotordr*ocon.tbl
FILE: r:\trans-design\o'connor\cadd\bdg\R-DCES\OC45GLresdc02.dgn

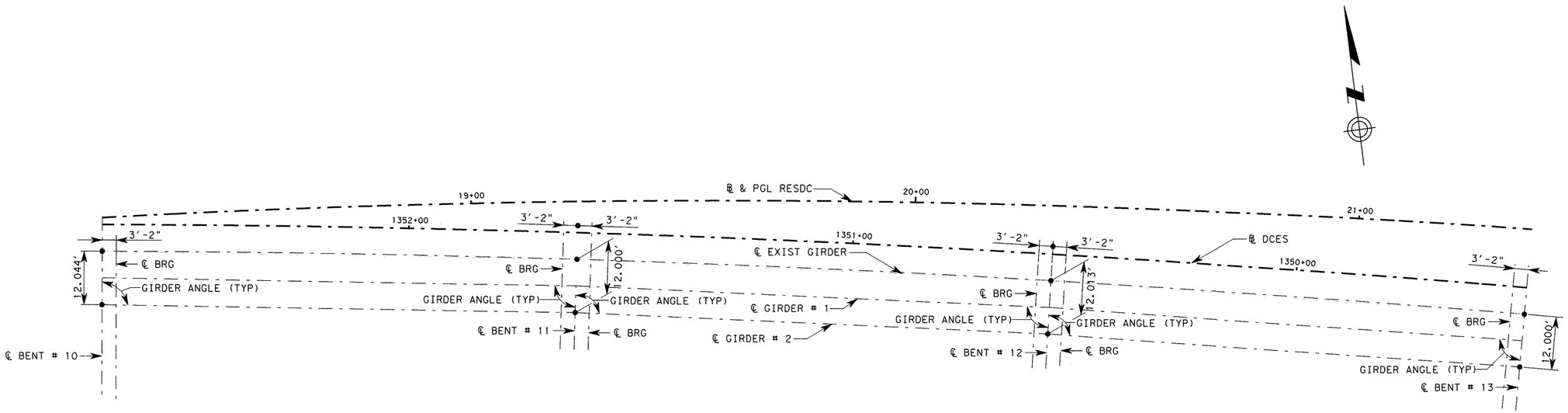

SPAN # 10
(TY Tx54 GIRDERS)

SPAN # 11
(TY Tx54 GIRDERS)

SPAN # 12
(TY Tx54 GIRDERS)

BENT REPORT

Bent 10 N 7° 22' 26.00" E
Distance between Station Line and Girder 1 13.527 R

		Girder Spancing (C.L. Bent	Beam Angle D	M	S
Span 10	Beam 1	0.000	90	52	51
	Beam 2	6.022	90	52	51
	Total	6.022			

Bent 11 N 8 58' 49.00" E
Distance between Station Line and Girder 1 18.982 R

		Girder Spancing (C.L. Bent	Beam Angle D	M	S
Span 10	Beam 1	0.000	89	16	29
	Beam 2	6.022	89	16	29
	Total	6.022			

Bent 11 N 8 58' 49.00" E
Distance between Station Line and Girder 1 18.982 R

		Girder Spancing (C.L. Bent	Beam Angle D	M	S
Span 11	Beam 1	0.000	90	48	23
	Beam 2	6.022	90	48	23
	Total	6.022			

Bent 12 N 10 35' 02.00" E
Distance between Station Line and Girder 1 22.899 R

		Girder Spancing (C.L. Bent	Beam Angle D	M	S
Span 11	Beam 1	0.000	89	12	10
	Beam 2	6.022	89	12	10
	Total	6.022			

Bent 12 N 10 35' 02.00" E
Distance between Station Line and Girder 1 22.899 R

		Girder Spancing (C.L. Bent	Beam Angle D	M	S
Span 12	Beam 1	0.000	90	48	12
	Beam 2	6.022	90	48	12
	Total	6.022			

Bent 13 N 12 15' 30.00" E
Distance between Station Line and Girder 1 25.239 R

		Girder Spancing (C.L. Bent	Beam Angle D	M	S
Span 12	Beam 1	0.000	89	07	44
	Beam 2	6.022	89	07	44
	Total	6.022			

GIRDER REPORT

Beam Reprt Span 10

	Horizontal Distance C-C Bent	C-C Bearing	True Distance Bot. BM. FLG	Girder Slope
Beam 1	104.662	98.338	99.893	0.0360
Beam 2	104.493	98.159	99.725	0.0361

Beam Reprt Span 11

	Horizontal Distance C-C Bent	C-C Bearing	True Distance Bot. BM. FLG	Girder Slope
Beam 1	106.665	100.331	101.916	0.0408
Beam 2	106.496	100.162	101.747	0.0409

Beam Reprt Span 12

	Horizontal Distance C-C Bent	C-C Bearing	True Distance Bot. BM. FLG	Girder Slope
Beam 1	106.622	100.288	101.873	0.0409
Beam 2	106.446	100.112	101.697	0.041

STATE OF TEXAS
OSAMA A. SHAHAWY
88476
LICENSED
PROFESSIONAL ENGINEER
4/1/11

HL-93
LOADING

REV. No.	DATE	REVISION	BY
△			
△			
△			

PBSJ
an Atkins company
TBPE REG. # F-474

Texas Department of Transportation
Austin District
©2011 by TxDOT

SH 45 / O'CONNOR DRIVE RAMP EAST-SOUTH DC I-GIRDER LAYOUT (SPAN 10-12)

SCALE: 1"=25'
SHEET 3 OF 3

DESIGNED: RBR	FED. RD DIV. No.	STATE	PROJECT No.			HIGHWAY No.
CHECKED: OAS	6	TEXAS				LP 1/SH 45
DRAWN: RBR	STATE DISTRICT	COUNTY	CONTROL No.	SECTION No.	JOB No.	SHEET No.
CHECKED: OAS	AUSTIN	WILLIAMSON	0683	06	027	408

PLOT DRIVER: RD*11x17*PDF.plt
PEN TABLE: plotordr*ocon.tbl
FILE: r:\trans-design\o'connor\cadd\bdg\R-DCES\OC45GLresde03.dgn
DATE: 4/11/2011 TIME: 10:36:39 AM

DATE: 6/2/2011 TIME: 1:56:38 PM

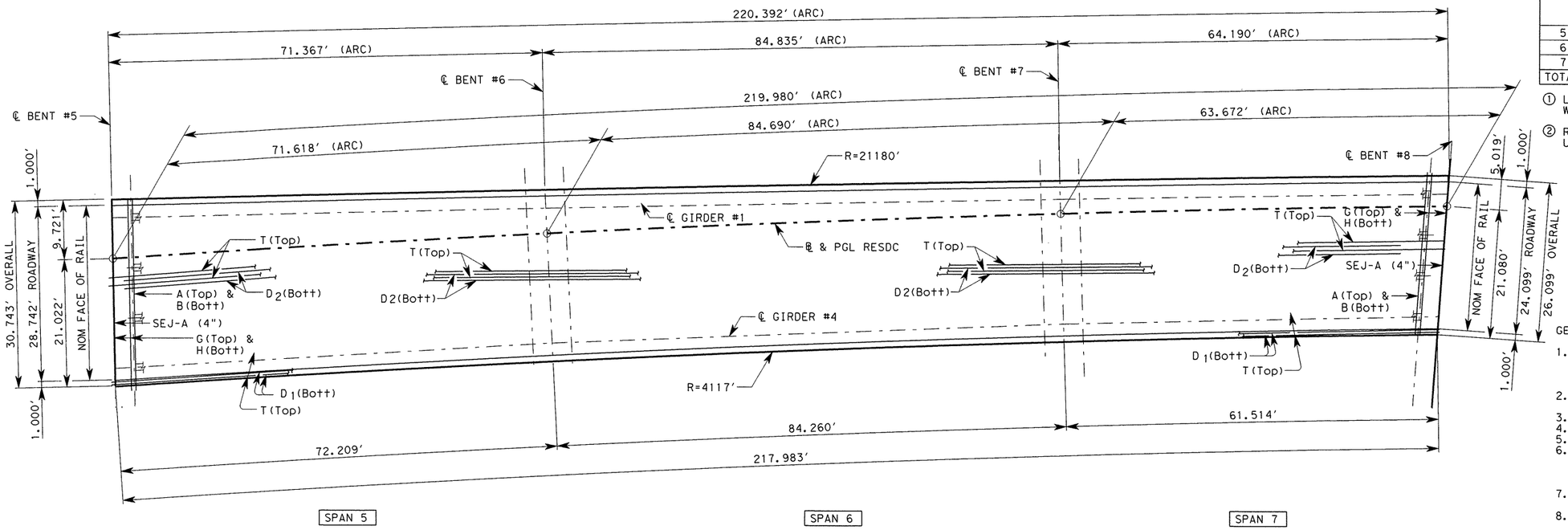

PLAN

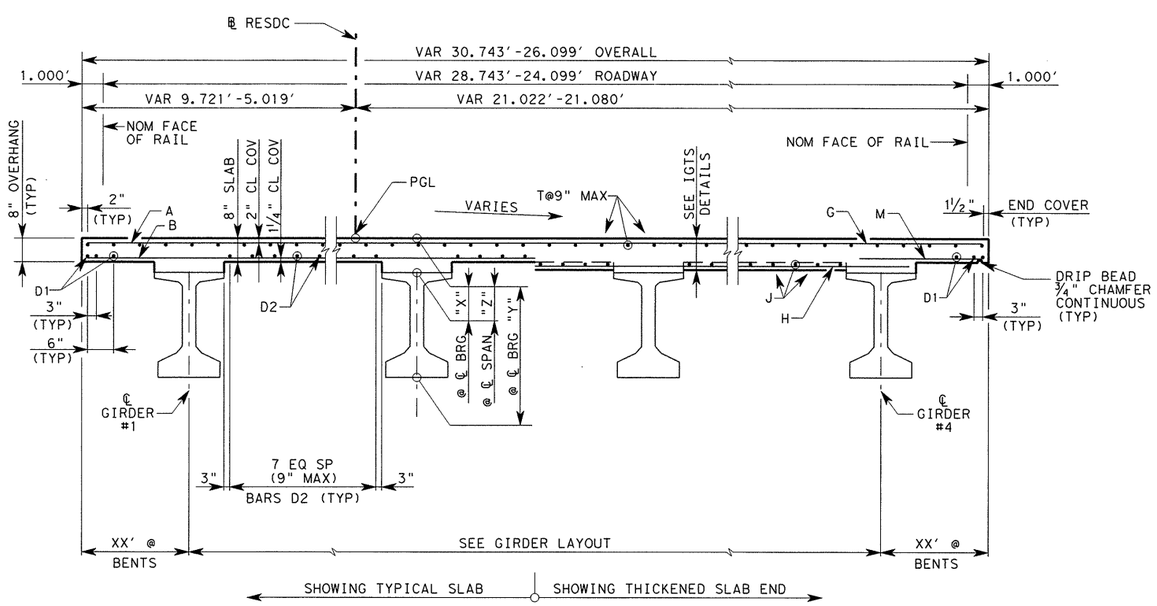

TYPICAL SECTION

TABLE OF ESTIMATED QUANTITIES

SPAN	REINF CONCRETE SLAB	①PRESTR CONCRETE GIRDERS (Tx54)	CLASS "S" CONCRETE	② TOTAL REINF STEEL
	SF	LF	CY	LB
5	2,107.3	267.7	52	13,696
6	2,296.0	318.8	57	14,924
7	1,642.7	232.2	41	10,680
TOTAL	6,045.0	818.7	150.0	39,300

① LENGTHS SHOWN ARE BOTTOM FLANGE LENGTHS WITH ADJUSTMENTS MADE FOR GIRDER SLOPE.

② REINFORCING STEEL WEIGHT IS CALCULATED USING AN APPROXIMATE FACTOR OF 6.5 LB/SF.

BAR TABLE

BAR	SIZE
A	#5
B	#5
D	#5
G	#5
H	#5
J	#5
M	#5
T	#4

GENERAL NOTES:

1. DESIGNED ACCORDING TO AASHTO LRFD BRIDGE DESIGN SPECIFICATIONS, 4TH EDITION, 2007 AND 2009 CURRENT INTERIM'S FOR HL-93 LOADING.
2. SEE IGTS STANDARD FOR THICKENED SLAB END DETAIL AND QUANTITY ADJUSTMENT
3. ~~THE USE OF PRECAST PANELS IS NOT ALLOWED.~~
4. ALL REINFORCING SHOULD BE GRADE 60.
5. CONCRETE STRENGTH F'C = 4,000 PSI
6. BAR LAPS, WHERE REQUIRED, SHALL BE AS FOLLOWS:
   #4 = 1'-5"
   #5 = 1'-9"
7. SEE MISC. SLAB DETAILS FOR REINFORCING OVER BENTS
8. FOR DECK DRAIN LOCATION AND REINFORCEMENT DETAILS, SEE BRIDGE LAYOUT SHEETS AND BRIDGE DRAIN DETAIL SHEETS.

TABLE OF SECTION DEPTHS

SPAN #	"X" AT ℄ BRG	"Y" AT ℄ BRG	"Z" AT ℄ SPAN
5	11 ¾	65 ¾	11 ⅞
6	13 ½	67 ½	11 ¼
7	12 ¼	66 ¼	11 ⅛

SPAN #	I-G #	"A"	"B"
5	ALL	0.132	0.189
6	ALL	0.268	0.383
7	ALL	0.067	0.096

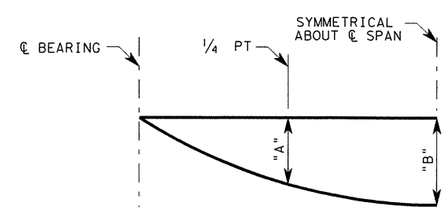

NOTE: DEFLECTIONS SHOWN ARE DUE TO CONCRETE SLAB ONLY. (E_c = 5 x 10^6 PSI) CALCULATED DEFLECTIONS SHOWN ARE THEORETICAL. ACTUAL DIMENSIONS MAY BE LESS. DEFLECTIONS SHALL BE ADJUSTED BASED ON FIELD OBSERVATIONS

DEAD LOAD DEFLECTION DIAGRAM

Rev. 6/29/11

STATE OF TEXAS
OSAMA A. SHAHAWY
88476
LICENSED PROFESSIONAL ENGINEER
6/7/11

HL-93 LOADING

REV. No.	DATE	REVISION	BY
△			
△			
△			

PBSJ an Atkins company TBPE REG. # F-474

Texas Department of Transportation Austin District

©2011 by TxDOT

SH 45 / O'CONNOR DRIVE RAMP EAST-SOUTH DC 219.98' PRESTRESS CONC I-GIRDER UNIT (SPAN 5-7)

SCALE: NTS SHEET 1 OF 4

DESIGNED: RBR	FED. RD DIV. No.	STATE	PROJECT No.			HIGHWAY No.
CHECKED: OAS	6	TEXAS				LP 1/SH 45
DRAWN: RBR	STATE DISTRICT	COUNTY	CONTROL No.	SECTION No.	JOB No.	SHEET No.
CHECKED: OAS	AUSTIN	WILLIAMSON	0683	06	027	409

PLOT DRIVER: RD*11x17*PDF.plt
PEN TABLE: plotordr*ocon.tbl
FILE: r:\trans-design\o'connor\cadd\bdg\R-DCES\OC45GSresdc01.dgn

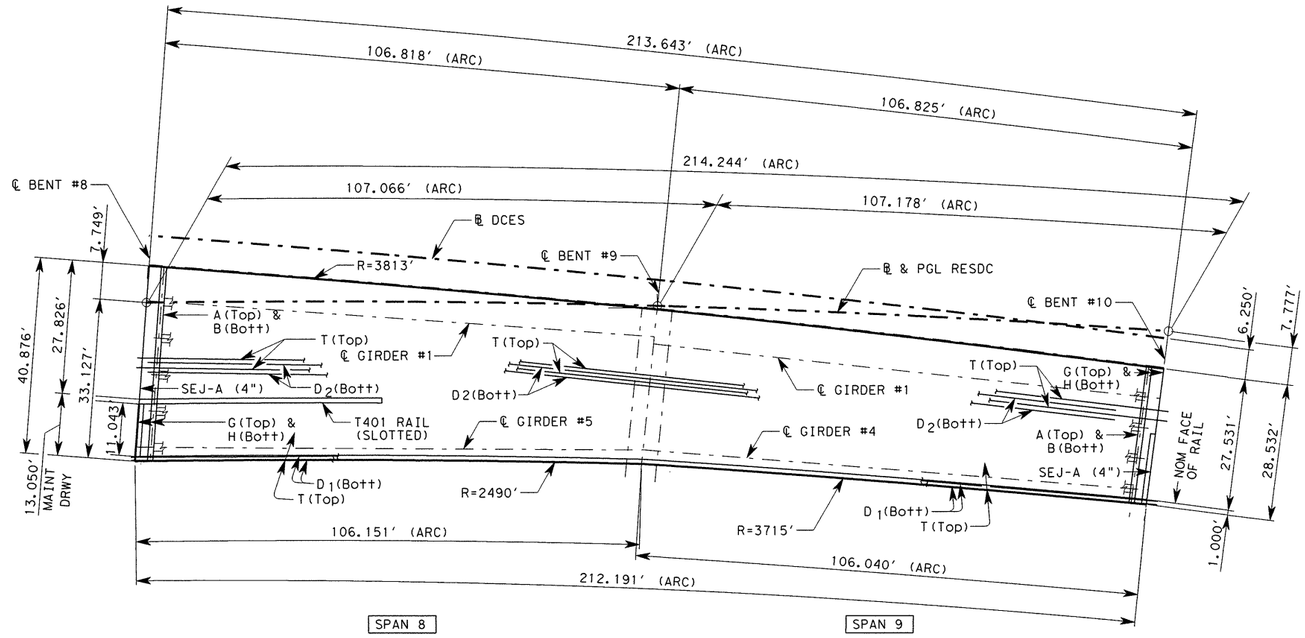

PLAN

TABLE OF ESTIMATED QUANTITIES				
SPAN	REINF CONCRETE SLAB	① PRESTR CONCRETE GIRDERS (Tx54)	CLASS "S" CONCRETE	② TOTAL REINF STEEL
	SF	LF	CY	LB
8	3,877.0	507.9	96	25,197
9	3,235.0	406.3	80	21,158
TOTAL	7,111.0	414.2	176	46,355

① LENGTHS SHOWN ARE BOTTOM FLANGE LENGTHS WITH ADJUSTMENTS MADE FOR GIRDER SLOPE.

② REINFORCING STEEL WEIGHT IS CALCULATED USING AN APPROXIMATE FACTOR OF 6.5 LB/SF.

BAR TABLE	
BAR	SIZE
A	#5
B	#5
D	#5
G	#5
H	#5
J	#5
M	#5
T	#4
U	#4

GENERAL NOTES:

1. DESIGNED ACCORDING TO AASHTO LRFD BRIDGE DESIGN SPECIFICATIONS, 4TH EDITION, 2007 AND 2009 CURRENT INTERIM'S FOR HL-93 LOADING.
2. SEE IGTS STANDARD FOR THICKENED SLAB END DETAIL AND QUANTITY ADJUSTMENT
3. SEE PCP (C) OR PMDF (C) STANDARDS FOR DETAILS AND QUANTITY ADJUSTMENT IF EITHER OF THESE OPTIONS ARE USED.
4. ALL REINFORCING SHOULD BE GRADE 60.
5. CONCRETE STRENGTH F'C = 4,000 PSI
6. BAR LAPS, WHERE REQUIRED, SHALL BE AS FOLLOWS:
   #4 = 1'-5"
   #5 = 1'-9"
7. SEE MISC. SLAB DETAILS FOR REINFORCING OVER BENTS
8. FOR DECK DRAIN LOCATION AND REINFORCEMENT DETAILS, SEE BRIDGE LAYOUT SHEETS AND BRIDGE DRAIN DETAIL SHEETS.

STATE OF TEXAS
OSAMA A. SHAHAWY
88476
LICENSED PROFESSIONAL ENGINEER
4/11/11

HL-93 LOADING

TABLE OF SECTION DEPTHS			
SPAN NO.	"X" AT ℄ BRG	"Y" AT ℄ BRG	"Z" AT ℄ SPAN
8	13	67	9 1/2
9	12 3/4	66 3/4	9 1/8

SPAN #	I-G #	"A"	"B"
8	ALL	0.874	1.249
9	ALL	0.880	1.257

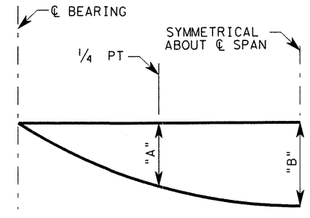

NOTE: DEFLECTIONS SHOWN ARE DUE TO CONCRETE SLAB ONLY. ($E_c = 5 \times 10^6$ PSI) CALCULATED DEFLECTIONS SHOWN ARE THEORETICAL. ACTUAL DIMENSIONS MAY BE LESS. DEFLECTIONS SHALL BE ADJUSTED BASED ON FIELD OBSERVATIONS

DEAD LOAD DEFLECTION DIAGRAM

REV. No.	DATE	REVISION	BY
△			
△			
△			

PBSJ an Atkins company TBPE REG. # F-474

Texas Department of Transportation
Austin District
©2011 by TxDOT

SH 45 / O'CONNOR DRIVE RAMP EAST-SOUTH DC 214.25' PRESTRESS CONC I-GIRDER UNIT (SPAN 8-9)

SCALE: NTS — SHEET 2 OF 4

DESIGNED: RBR	FED. RD DIV. No.	STATE	PROJECT No.			HIGHWAY No.	
CHECKED: OAS	6	TEXAS				LP 1/SH 45	
DRAWN: RBR	STATE DISTRICT	COUNTY	CONTROL No.	SECTION No.	JOB No.	SHEET No.	
CHECKED: OAS	AUSTIN	WILLIAMSON	0683	06	027	410	

PLOT DRIVER: RD*11x17*PDF.plt
PEN TABLE: plotordr*ocon.tbl
FILE: r:\trans-design\o'connor\cadd\bdg\R-DCES\OC450Sresda02.dgn
DATE: 4/11/2011 TIME: 10:36:43 AM

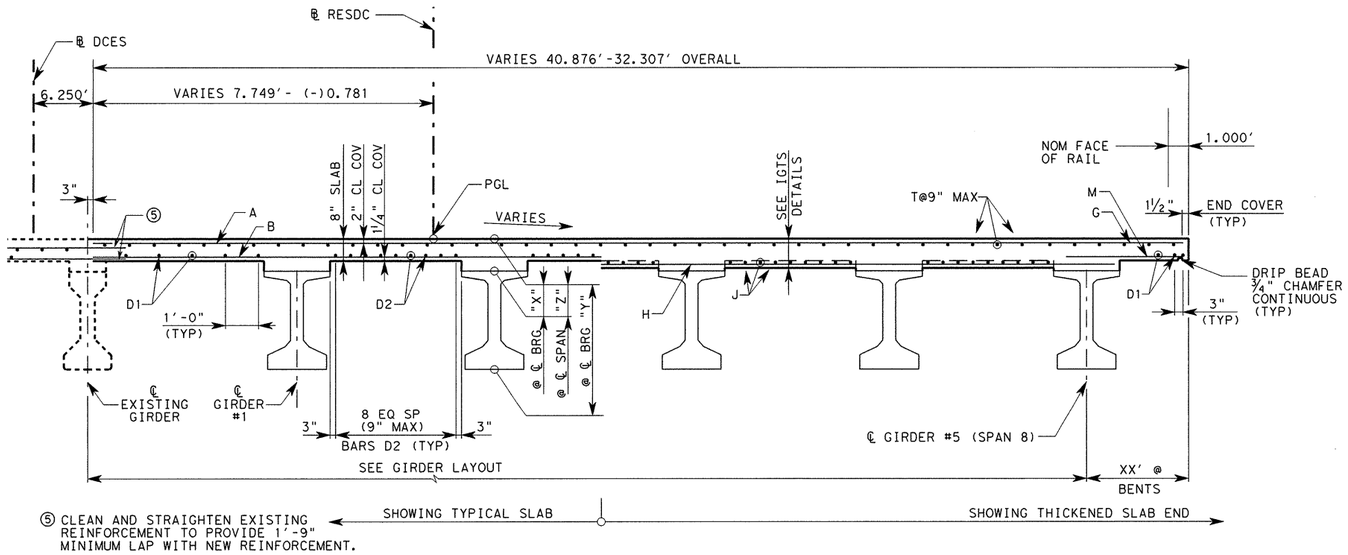

TYPICAL SECTION - SPAN 8

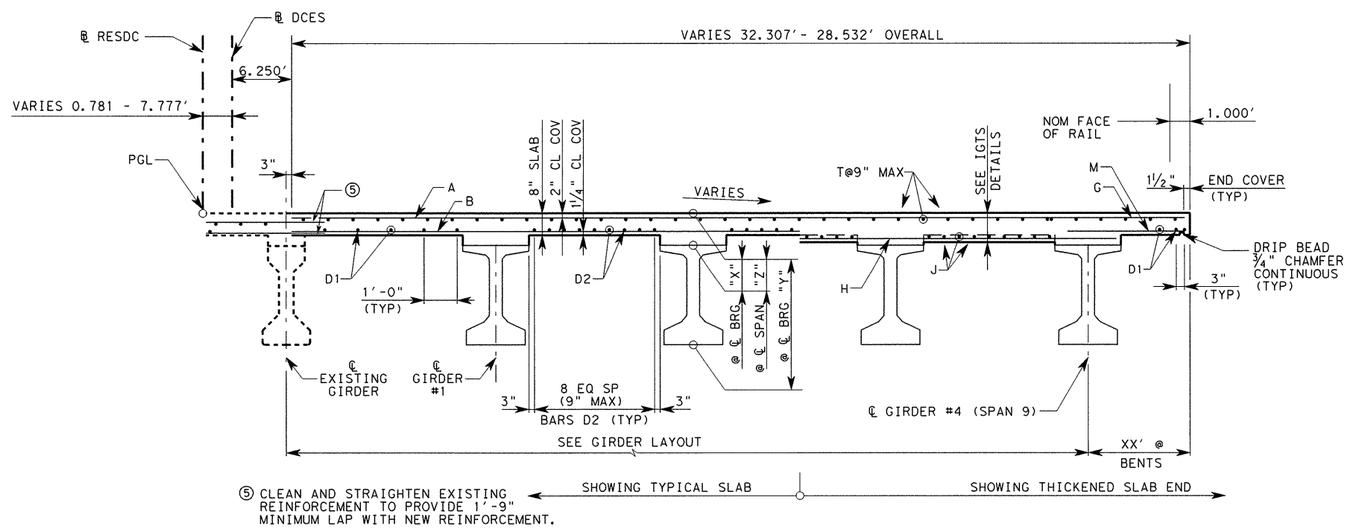

TYPICAL SECTION - SPAN 9

HL-93 LOADING

STATE OF TEXAS
OSAMA A. SHAHAWY
88476
LICENSED PROFESSIONAL ENGINEER
4/11/11

REV. No.	DATE	REVISION	BY
△			
△			
△			

PBSJ an Atkins company TBPE REG. # F-474

Texas Department of Transportation
Austin District
©2011 by TxDOT

SH 45 / O'CONNOR DRIVE RAMP EAST-SOUTH DC 214.25' PRESTRESS CONC I-GIRDER UNIT (SPAN 8-9)

SCALE: NTS — SHEET 3 OF 4

DESIGNED: RBR	FED. RD DIV. No.	STATE	PROJECT No.		HIGHWAY No.
CHECKED: OAS	6	TEXAS			LP 1/SH 45

DRAWN: RBR	STATE DISTRICT	COUNTY	CONTROL No.	SECTION No.	JOB No.	SHEET No.
CHECKED: OAS	AUSTIN	WILLIAMSON	0683	06	027	411

PLOT DRIVER: RD*11x17*PDF.plt
PEN TABLE: plotordr*ocon.tbl
FILE: r:\trans-design\o'connor\cadd\bdg\R-DCES\OC456Sresdc03.dgn
DATE: 4/11/2011 TIME: 10:36:44 AM

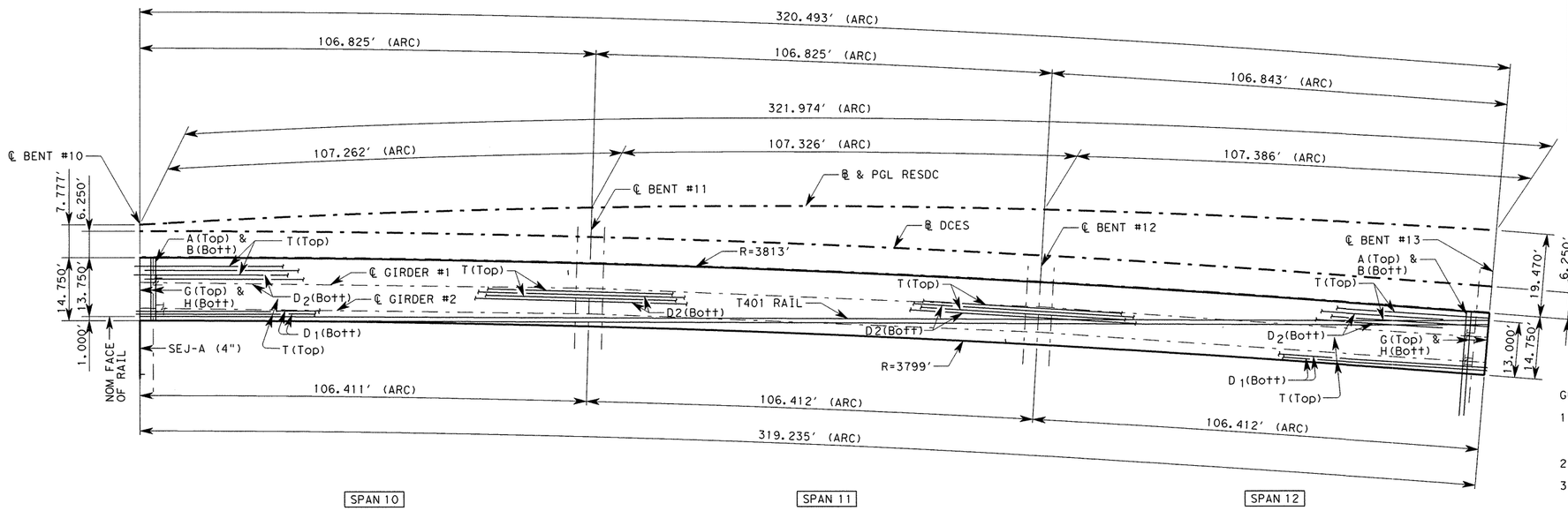

PLAN

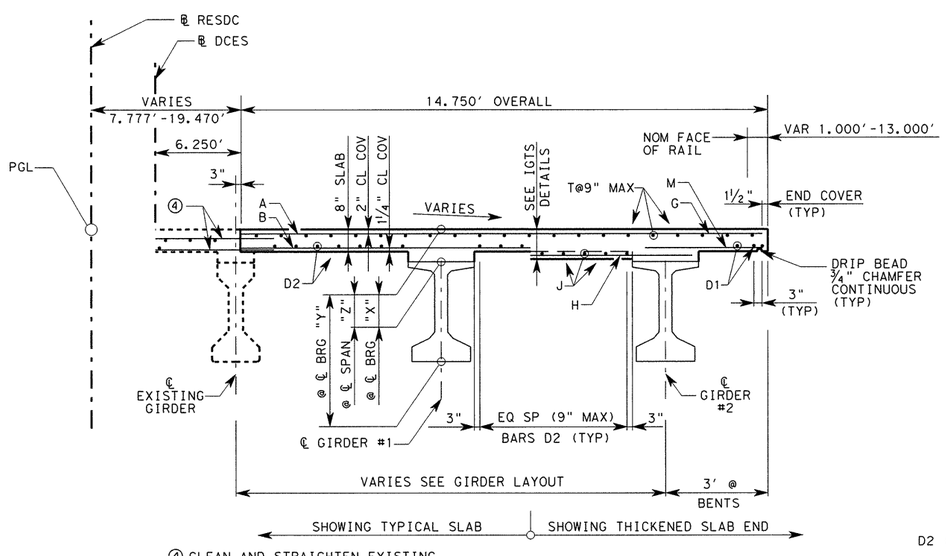

④ CLEAN AND STRAIGHTEN EXISTING REINFORCEMENT TO PROVIDE 1′-9" MINIMUM LAP WITH NEW REINFORCEMENT.

TYPICAL SECTION

TABLE OF ESTIMATED QUANTITIES

SPAN	REINF CONCRETE SLAB	① PRESTR CONCRETE GIRDERS (Tx54)	CLASS "S" CONCRETE	② TOTAL REINF STEEL
	SF	LF	CY	LB
10	1,572.6	199.6	38.8	10,222
11	1,572.6	203.6	38.8	10,222
12	1,572.8	203.6	38.8	10,222
TOTAL	4,718.0	606.8	116.5	30,666

① LENGTHS SHOWN ARE BOTTOM FLANGE LENGTHS WITH ADJUSTMENTS MADE FOR GIRDER SLOPE.

② REINFORCING STEEL WEIGHT IS CALCULATED USING AN APPROXIMATE FACTOR OF 6.5 LB/SF.

BAR TABLE

BAR	SIZE
A	#5
B	#5
D	#5
G	#5
H	#5
J	#5
M	#5
T	#4
U	#4

SEJ-A (4") →

GENERAL NOTES:

1. DESIGNED ACCORDING TO AASHTO LRFD BRIDGE DESIGN SPECIFICATIONS, 4TH EDITION, 2007 AND 2009 CURRENT INTERIM'S FOR HL-93 LOADING.
2. SEE IGTS STANDARD FOR THICKENED SLAB END DETAIL AND QUANTITY ADJUSTMENT
3. SEE PCP (C) OR PMDF (C) STANDARDS FOR DETAILS AND QUANTITY ADJUSTMENT IF EITHER OF THESE OPTIONS ARE USED.
4. ALL REINFORCING SHOULD BE GRADE 60.
5. CONCRETE STRENGTH F'C = 4,000 PSI
6. BAR LAPS, WHERE REQUIRED, SHALL BE AS FOLLOWS:
   #4 = 1′-5"
   #5 = 1′-9"
7. SEE MISC. SLAB DETAILS FOR REINFORCING OVER BENTS
8. FOR DECK DRAIN LOCATION AND REINFORCEMENT DETAILS, SEE BRIDGE LAYOUT SHEETS AND BRIDGE DRAIN DETAIL SHEETS.

TABLE OF SECTION DEPTHS

SPAN #	"X" AT ℄ BRG	"Y" AT ℄ BRG	"Z" AT ℄ SPAN
10	12	66	9
11	10 ½	64 ½	9
12	10 ¾	64 ¾	9 ⅛

SPAN #	I-G #	"A"	"B"
10	ALL	0.701	1.001
11	ALL	0.753	1.075
12	ALL	0.747	1.067

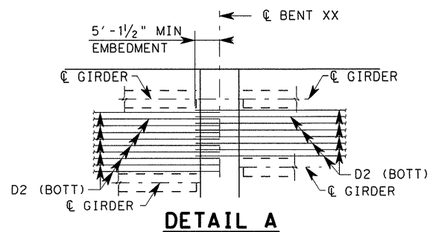

DETAIL A

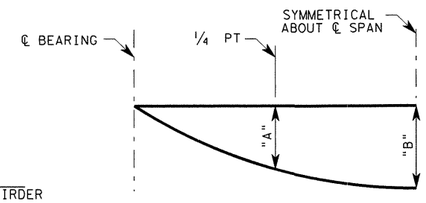

NOTE: DEFLECTIONS SHOWN ARE DUE TO CONCRETE SLAB ONLY. ($E_c = 5 \times 10^6$ PSI) CALCULATED DEFLECTIONS SHOWN ARE THEORETICAL. ACTUAL DIMENSIONS MAY BE LESS. DEFLECTIONS SHALL BE ADJUSTED BASED ON FIELD OBSERVATIONS

DEAD LOAD DEFLECTION DIAGRAM

HL-93 LOADING

STATE OF TEXAS
OSAMA A. SHAHAWY
88476
LICENSED PROFESSIONAL ENGINEER
4/11/11

REV. No.	DATE	REVISION	BY
△			
△			
△			

PBSJ an Atkins company TBPE REG. # F-474

Texas Department of Transportation
Austin District
©2011 by TxDOT

SH 45 / O'CONNOR DRIVE RAMP EAST-SOUTH DC 321.95′ PRESTRESS CONC I-GIRDER UNIT (SPAN 10-12)

SCALE: NTS — SHEET 4 OF 4

DESIGNED: RBR	FED. RD DIV. No.	STATE	PROJECT No.			HIGHWAY No.
CHECKED: OAS	6	TEXAS				LP 1/SH 45
DRAWN: RBR	STATE DISTRICT	COUNTY	CONTROL No.	SECTION No.	JOB No.	SHEET No.
CHECKED: OAS	AUSTIN	WILLIAMSON	0683	06	027	412

DATE: 4/11/2011 TIME: 10:36:46 AM
PLOT DRIVER: RD*11x17*PDF.plt
PEN TABLE: plotordr*ocon.tbl
FILE: r:\trans-design\o'connor\cadd\bag\r-dces\0C45GSresdc04.dgn

DESIGNED GIRDERS (DEPRESSED STRANDS)

STRUCTURE	SPAN NO.	GIRDER NO.	GIRDER TYPE	NON-STD STRAND PATTERN	PRESTRESSING STRANDS TOTAL NO.	SIZE (in)	STRGTH fpu (ksi)	"e" ℄ (in)	"e" END (in)	DEPRESSED NO.	DEPRESSED TO (in)	CONCRETE RELEASE STRGTH f'ci (ksi)	CONCRETE MINIMUM 28 DAY COMP STRGTH f'c (ksi)
RESDC	5	ALL	Tx54		18	½	270	20.563	20.563	4	4.5	4	5
RESDC	6	ALL	Tx54		24	½	270	20.175	18.508	4	14.5	4	5
RESDC	7	ALL	Tx54		14	½	270	21.008	21.008	2	2.5	4	5
RESDC	8	ALL	Tx54		44	½	270	18.826	11.19	8	50.5	4.4	5
RESDC	9	ALL	Tx54		44	½	270	18.826	11.19	8	50.5	4.4	5
RESDC	10	ALL	Tx54		32	½	270	19.633	17.008	6	20.5	4	5
RESDC	11	ALL	Tx54		34	½	270	19.478	15.596	6	28.5	4	5
RESDC	12	ALL	Tx54		34	½	270	19.478	15.596	6	28.5	4	5

OPTIONAL DESIGN

DESIGN LOAD COMP STRESS (TOP ℄) (SERVICE I) fct(ksi)	DESIGN LOAD TENSILE STRESS (BOTT ℄) (SERVICE III) fcb(ksi)	REQUIRED MINIMUM ULTIMATE MOMENT CAPACITY (STRENGTH I) (ft-kips)	LIVE LOAD DISTRIB FACTOR (1)
1.473	-1.589	3407.07	0.698
2.035	-2.103	4315.59	0.626
1.064	-1.148	2811.5	0.652
3.262	-3.176	6178.46	0.587
3.263	-3.172	6191.2	0.597
2.865	-2.66	4860.1	0.400
2.962	-2.75	5019.79	0.400
2.97	-2.755	5026.06	0.400

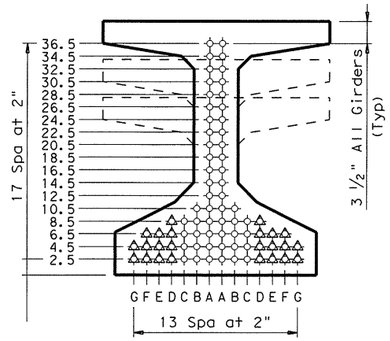

TYPE Tx28, Tx34 & Tx40 (2)

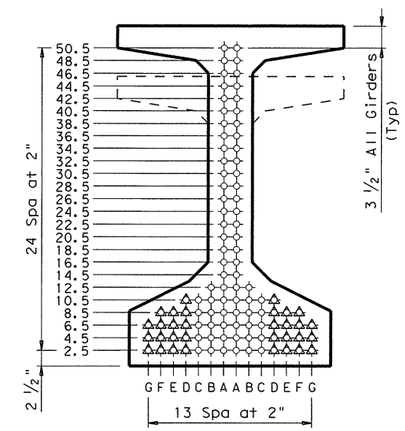

TYPE Tx46 & Tx54 (2)

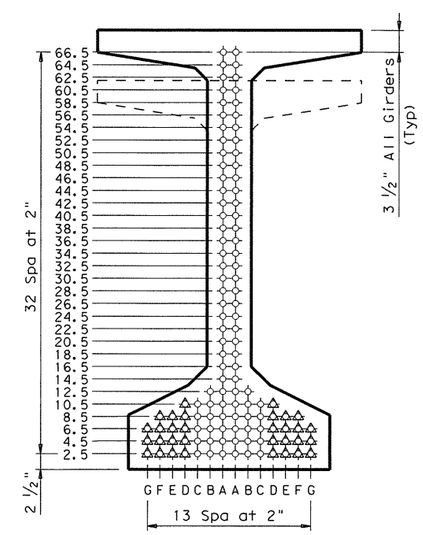

TYPE Tx62 & Tx70 (2)

NON-STANDARD STRAND PATTERNS

PATTERN	STRAND ARRANGEMENT AT ℄ OF GIRDER

GENERAL NOTES:

Designed in accordance with AASHTO LRFD Specifications.

All concrete must be Class H. Provide Class H(HPC) if shown elsewhere in plans. All reinforcing bars must be Grade 60.

When shown on this sheet, the Fabricator has the option of furnishing either the designed depressed strand girder or an approved optional design. All optional design submittals must be signed, sealed and dated by a registered Professional Engineer.

Optional designs for girders 120 feet or longer must have a calculated residual camber equal to or greater than that of the designed girder.

Prestress losses for the designed girders have been calculated for a relative humidity of 65 percent. Optional designs must likewise conform.

For depressed strand designed girders, strands must be located as low as possible on the 2" grid system unless a Non-Standard Strand Pattern is indicated. Fill row "2.5", then row "4.5", then row "6.5", etc., beginning each row in the "A" position and working outward until the required number of strands is reached. All strands in the "A" position must be depressed, maintaining the 2" spacing so that, at the girder ends, the upper two strands are in the position shown in the table.

Strands for the designed girder must be low relaxation strands pretensioned to 75 percent of fpu each.

Seal cracks in girder ends exceeding 0.005" in width as directed by the Engineer. The fabricator is permitted to decrease the spacing of Bars R and S by providing additional bars to help limit crack width provided the decreased spacing results in no less than 1" clear between bars. The fabricator must take an approved corrective action if cracks greater than 0.005" form on a repetitive basis.

(1) Portion of full HL93

(2) Full-length debonded strands are only permitted in strand positions marked Δ. Double wrap full-length debonded strands in outermost position of each row. Full-length debonding must comply with Item 426.4.F.4.

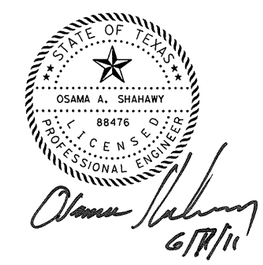

HL93 LOADING

Texas Department of Transportation
Bridge Division

PRESTRESSED CONCRETE I-GIRDER DESIGNS (NON-STANDARD SPANS)

IGND

FILE: ignds1e1.dgn	DN: TxDOT	CK: TxDOT	DW: TxDOT	CK: TxDOT
©TxDOT June 2007	DISTRICT	FEDERAL AID PROJECT		SHEET
REVISIONS 02/09: General Notes. 10/09: General Notes.	AUSTIN			413
	COUNTY		CONTROL-SECT-JOB	HIGHWAY
	WILLIAMSON		0683-06-027	SH 45 LOOP 1

Rev. 6/29/11

DISCLAIMER:
The use of this standard is governed by the "Texas Engineering Practice Act". No warranty of any kind is made by TxDOT for any purpose whatsoever. TxDOT assumes no responsibility for the conversion of this standard to other formats or for incorrect results or damages resulting from its use.

LEVELS DISPLAYED
1 2 3 4 5 6 7 8 9 10 11 12 13 14 15 16
17 18 19 20 21 22 23 24 25 26 27 28 29 30 31 32
33 34 35 36 37 38 39 40 41 42 43 44 45 46 47 48
49 50 51 52 53 54 55 56 57 58 59 60 61 62 63

ACC:

DATE: 6/2/2011 TIME: 2:06:17 PM

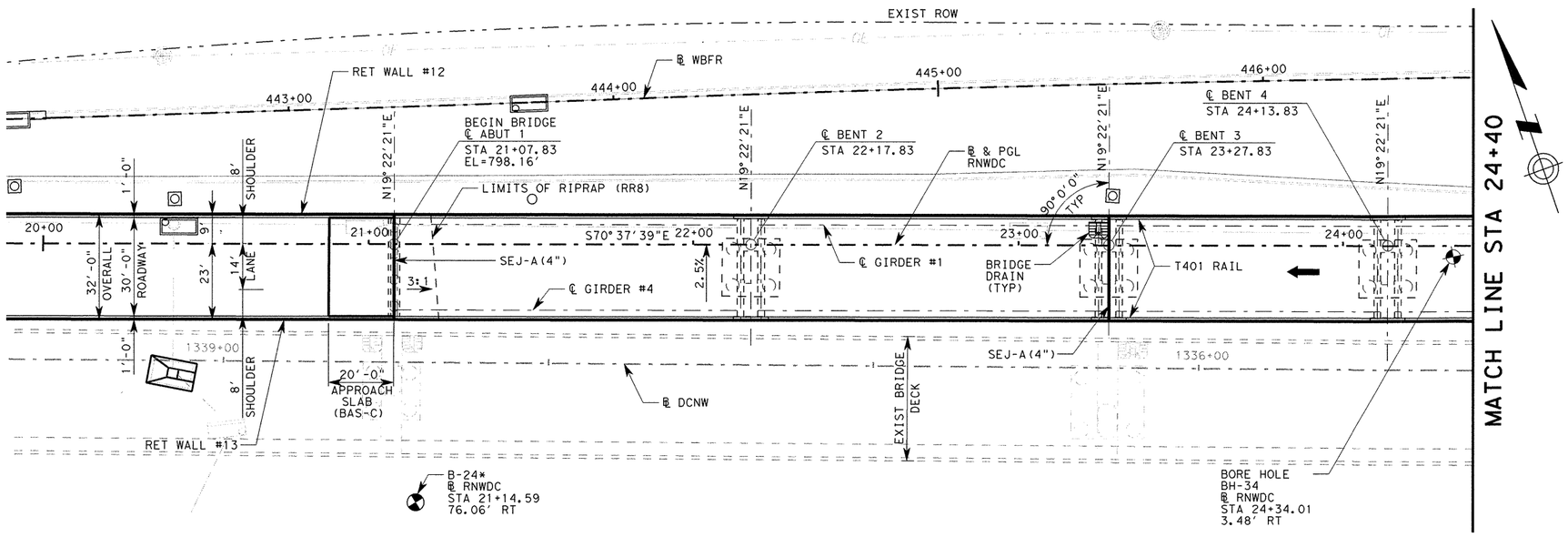

PLAN

* ADDITIONAL BORE HOLE INFORMATION CAN BE FOUND IN THE SH 45 SECTION 3 PHASE 2 AS-BUILT PLANS AND THE CORRESPONDING NOVEMBER 27, 2000 GEOTECHNICAL REPORT BY FUGRO.

NOTES:

1. DESIGNED ACCORDING TO AASHTO LRFD BRIDGE DESIGN SPECIFICATIONS, 4TH EDITION 2007 AND CURRENT INTERIMS FOR HL-93 LOADING.
2. FOR BORING LOGS SEE "BORING LOGS" SHEETS.
3. DRILLED SHAFTS ARE DESIGNED WITH POINT BEARING AND SKIN FRICTION TO BE FOUNDED AT ELEVATIONS SHOWN OR LOWER AS NECESSARY TO PENETRATE A MINIMUM OF TWO SHAFT DIAMETERS INTO UNWEATHERED LIMESTONE.
4. "H" - HEIGHTS SHOWN ARE APPROXIMATE. ACTUAL COLUMN HEIGHTS SHALL BE FIELD VERIFIED PRIOR TO CONSTRUCTION.
5. ALL BENTS ARE RADIAL UNLESS OTHERWISE NOTED.
6. THIS BRIDGE SHALL UTILIZE IGD (MOD) GIRDERS.
7. CONTRACTOR SHALL BREAKBACK HATCHED PORTION OF EXISTING SLAB TO BREAKBACK LINE AND REMOVE ALL OVERLAPPING EXISTING DRAIN, STRAIGHTEN AND EXTEND EXISTING REINFORCEMENT INTO NEW CONSTRUCTION.
8. NEW SLAB SHALL MATCH EXISTING SLAB PROFILE AT CONSTRUCTION JOINTS WITH ADJUSTMENTS FOR CROSS-SLOPE.
9. FOR CRASH CUSHION AND ATTACHMENT DETAILS, SEE TXDOT STANDARD SHEET "QUAD (N)-10".
10. FURNISH AND INSTALL 2 - 2" DIA. PVC CONDUITS IN EACH BRIDGE RAIL.
11. FOR INFO ON EXISTING CONCRETE DUCT BANK TO BE ABANDONED SEE TRAFFIC MANAGEMENT SYSTEM LAYOUT SHEETS.

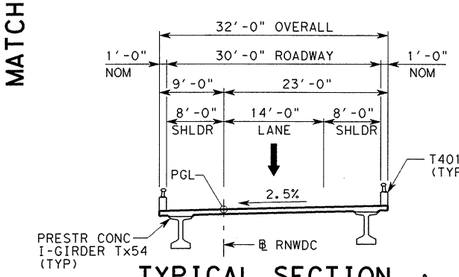

TYPICAL SECTION

(SPANS 1-8)
NTS

DESIGN SPEED: 50 MPH
ADT: 9,600 (2040)
RFC:
URBAN - RAMP
NBI: 14-246-0-0683-06-485

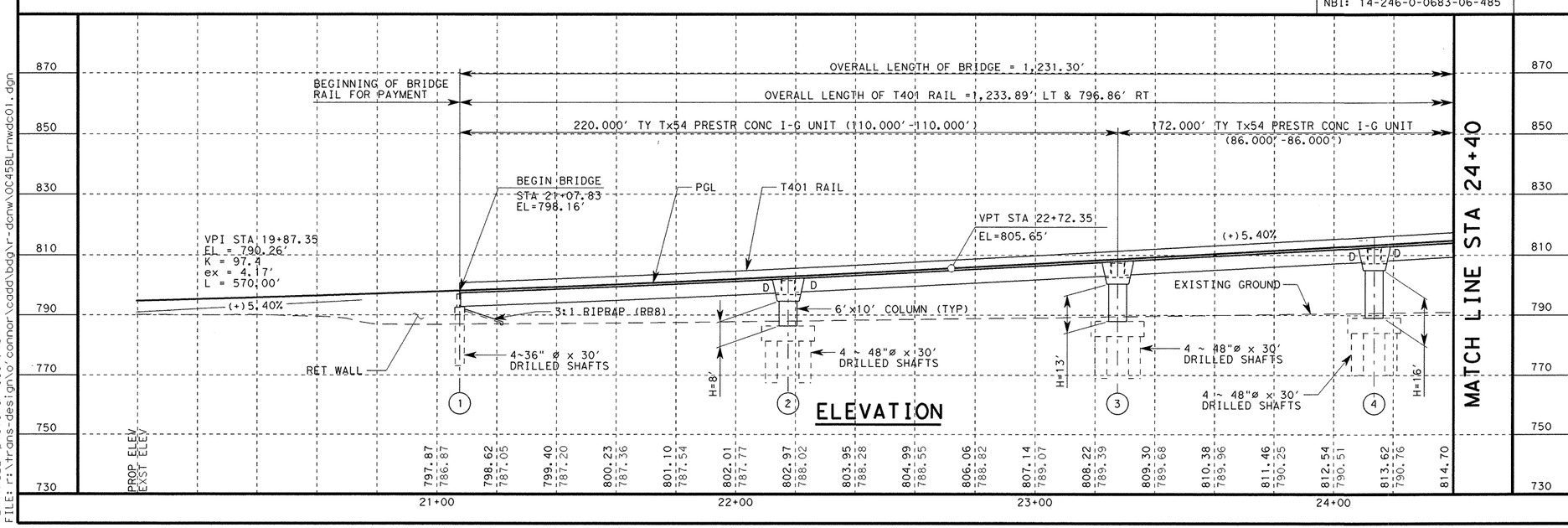

ELEVATION

HL-93 LOADING

REV. No.	DATE	REVISION	BY
△			
△			
△			

PBSJ
an Atkins company TBPE REG. # F-474

Texas Department of Transportation
Austin District
©2011 by TxDOT

SH 45 / O'CONNOR DRIVE RAMP NORTH-WEST DC BRIDGE LAYOUT

SCALE: 1"=40' SHEET 1 OF 4

DESIGNED: AUS	FED. RD DIV. No.	STATE	PROJECT No.			HIGHWAY No.	
CHECKED: RK	6	TEXAS				LP 1/SH 45	
DRAWN: JF	STATE DISTRICT	COUNTY	CONTROL No.	SECTION No.	JOB No.	SHEET No.	
CHECKED: AUS	AUSTIN	WILLIAMSON	0683	06	027	414	

PLOT DRIVER: RD*11x17*PDF.plt
PEN TABLE: plotordr*ocon.tbl
FILE: r:\trans-design\o'connor\cadd\bdg\r-dcnw\OC45BLrnwdc01.dgn

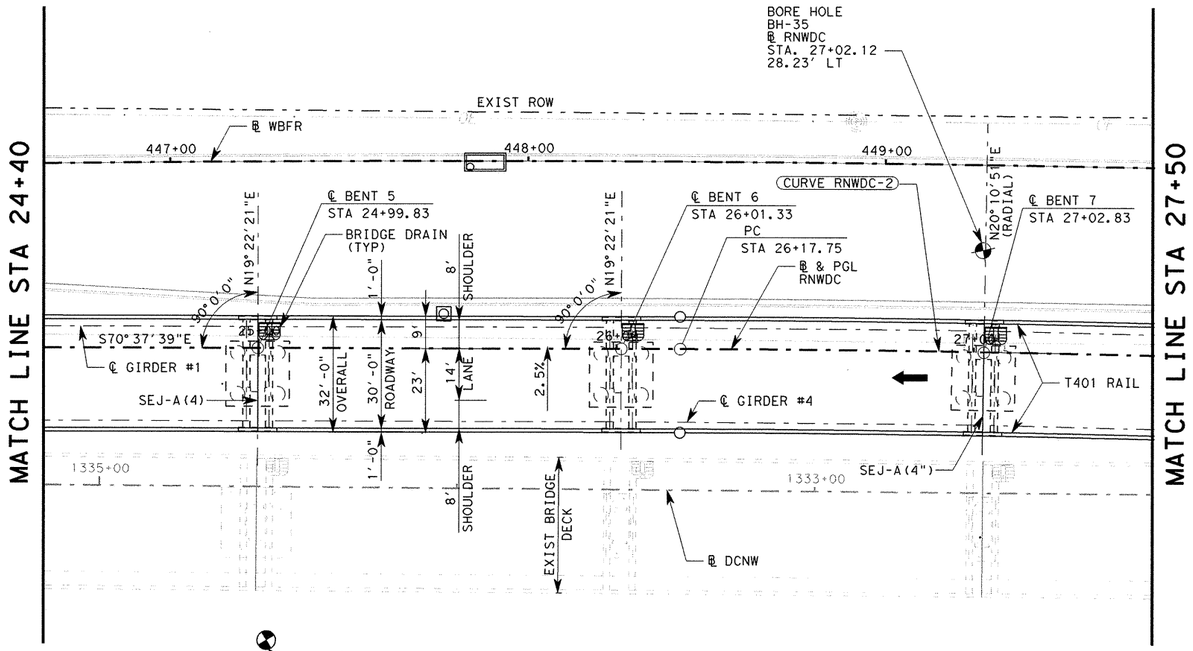

PLAN

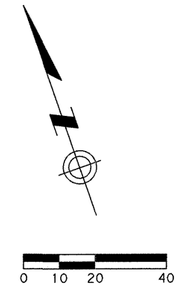

* ADDITIONAL BORE HOLE INFORMATION CAN BE FOUND IN THE SH 45 SECTION 3 PHASE 2 AS-BUILT PLANS AND THE CORRESPONDING NOVEMBER 27, 2000 GEOTECHNICAL REPORT BY FUGRO.

CURVE RNWDC-2

PI STA 29+80.47
N 10,148,581.0115
E 3,124,318.6927
Δ = 06°53'05" (RT)
T = 362.72'
L = 724.57'
R = 6,030.00'
PC STA 26+17.75
PT STA 33+42.32

DESIGN SPEED: 50 MPH
ADT: 9,600 (2040)
RFC:
URBAN - RAMP
NBI: 14-246-0-0683-06-485

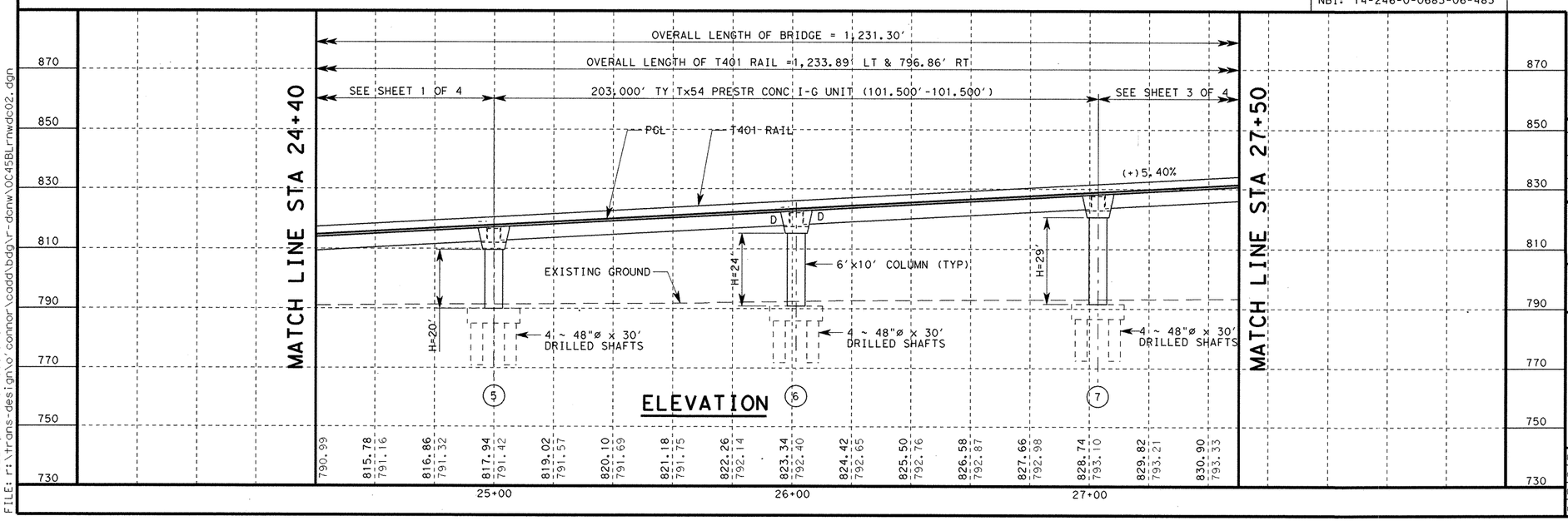

ELEVATION

HL-93 LOADING

STATE OF TEXAS
RAMKUMAR KOZHIKOTE
103166
LICENSED PROFESSIONAL ENGINEER

Ramkumar Kozhikote 4/11/2011

REV. No.	DATE	REVISION	BY
△			
△			
△			

PBSJ an Atkins company TBPE REG. # F-474

Texas Department of Transportation
Austin District

©2011 by TxDOT

SH 45 / O'CONNOR DRIVE RAMP NORTH-WEST DC BRIDGE LAYOUT

SCALE: 1"=40' SHEET 2 OF 4

DESIGNED: AUS	FED. RD DIV. No.	STATE	PROJECT No.			HIGHWAY No.	
CHECKED: RK	6	TEXAS				LP 1/SH 45	
DRAWN: JF	STATE DISTRICT	COUNTY	CONTROL No.	SECTION No.	JOB No.	SHEET No.	
CHECKED: AUS	AUSTIN	WILLIAMSON	0683	06	027	415	

DATE: 4/11/2011 TIME: 10:36:54 AM
PLOT DRIVER: RD*11x17*PDF.plt
PEN TABLE: plotordr*ocon.tbl
FILE: r:\trans-design\o'connor\cadd\bdg\r-dcnw\OC45BLrnwdc02.dgn

DATE: 4/11/2011 TIME: 10:36:56 AM

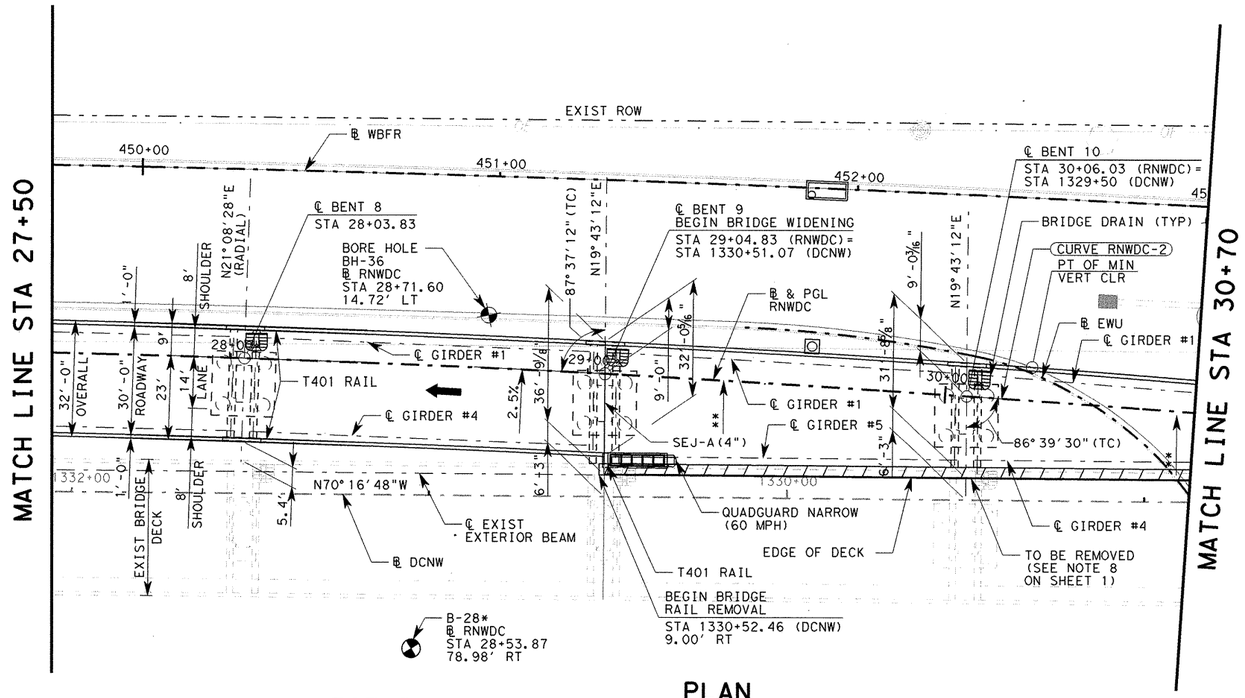

PLAN

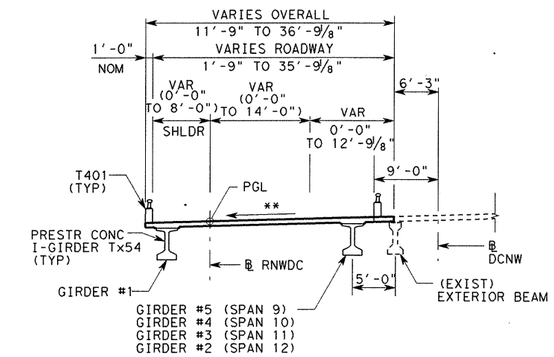

TYPICAL SECTION

(SPANS 9-12)
NTS

LEGEND

TO BE REMOVED

* ADDITIONAL BORE HOLE INFORMATION CAN BE FOUND IN THE SH 45 SECTION 3 PHASE 2 AS-BUILT PLANS AND THE CORRESPONDING NOVEMBER 27, 2000 GEOTECHNICAL REPORT BY FUGRO.

** MATCH EXISTING BRIDGE SLOPE

DESIGN SPEED: 50 MPH
ADT: 9,600 (2040)
RFC:
URBAN - RAMP
NBI: 14-246-0-0683-06-485

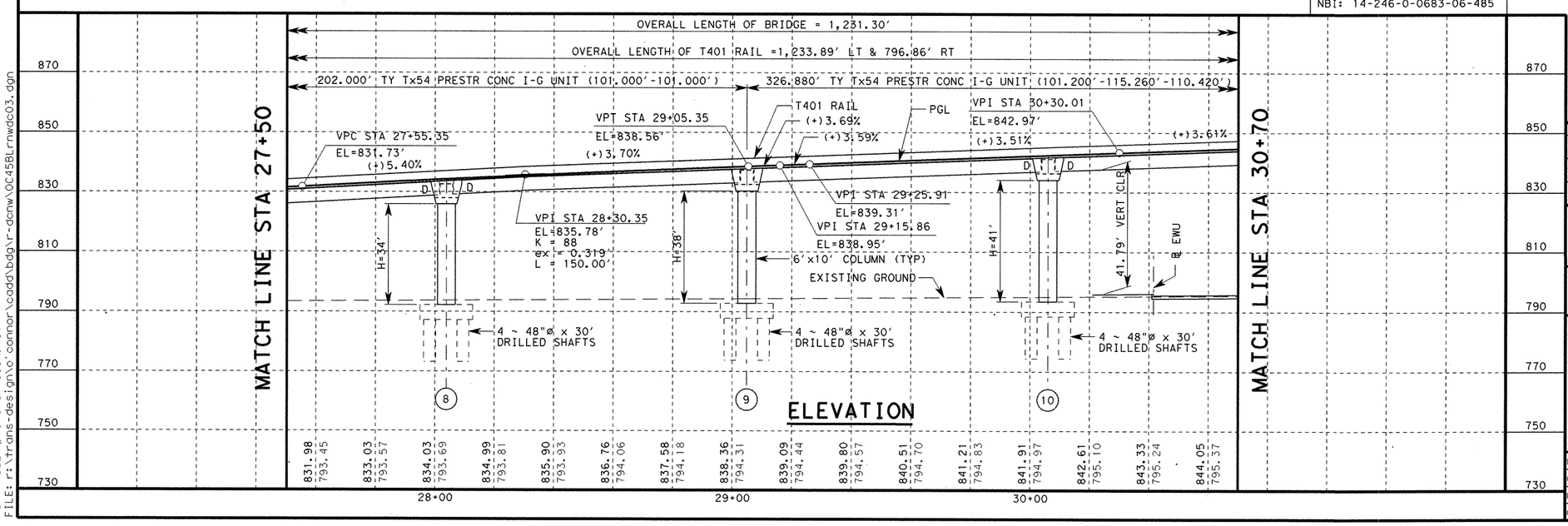

ELEVATION

HL-93 LOADING

STATE OF TEXAS
RAMKUMAR KOZHIKOTE
103166
LICENSED
PROFESSIONAL ENGINEER

Ramkumar Kozhikote 4/11/2011

REV. No.	DATE	REVISION	BY
△			
△			
△			

PBSJ
an Atkins company
TBPE REG. # F-474

Texas Department of Transportation
Austin District
©2011 by TxDOT

SH 45 / O'CONNOR DRIVE RAMP NORTH-WEST DC BRIDGE LAYOUT

SCALE: 1"=40'
SHEET 3 OF 4

DESIGNED: AUS	FED. RD DIV. No.	STATE	PROJECT No.	HIGHWAY No.
CHECKED: RK	6	TEXAS		LP 1/SH 45

DRAWN: JF	STATE DISTRICT	COUNTY	CONTROL No.	SECTION No.	JOB No.	SHEET No.
CHECKED: AUS	AUSTIN	WILLIAMSON	0683	06	027	416

PLOT DRIVER: RD*11x17*PDF.plt
PEN TABLE: plotordr*ocon.tbl
FILE: r:\trans-design\o'connor\cadd\bdg\r-dcnw\OC45BLrnwdc03.dgn

DATE: 4/11/2011 TIME: 10:36:59 AM

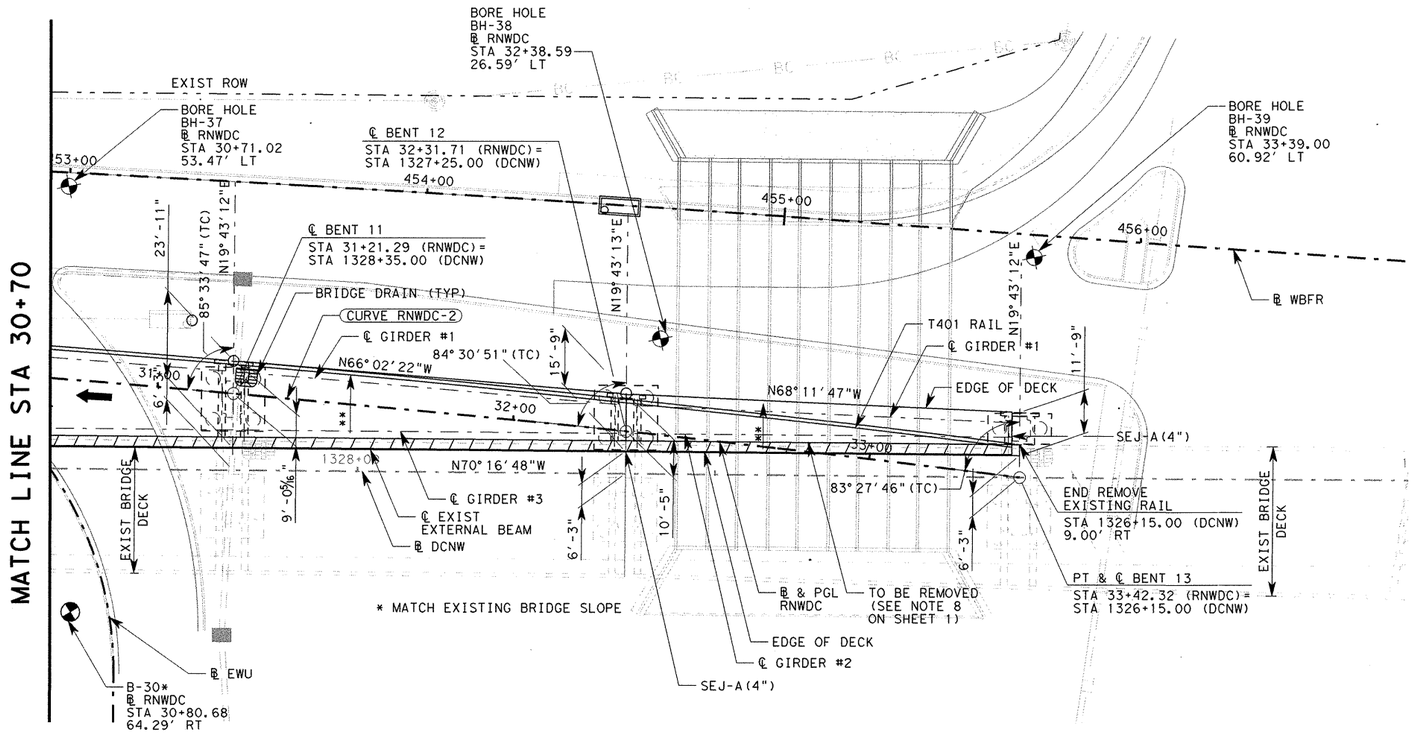

* ADDITIONAL BORE HOLE INFORMATION CAN BE FOUND IN THE SH 45 SECTION 3 PHASE 2 AS-BUILT PLANS AND THE CORRESPONDING NOVEMBER 27, 2000 GEOTECHNICAL REPORT BY FUGRO.

** MATCH EXISTING BRIDGE SLOPE

LEGEND

TO BE REMOVED

PLAN

DESIGN SPEED: 50 MPH
ADT: 9,600 (2040)
RFC:
URBAN - RAMP
NBI: 14-246-0-0683-06-485

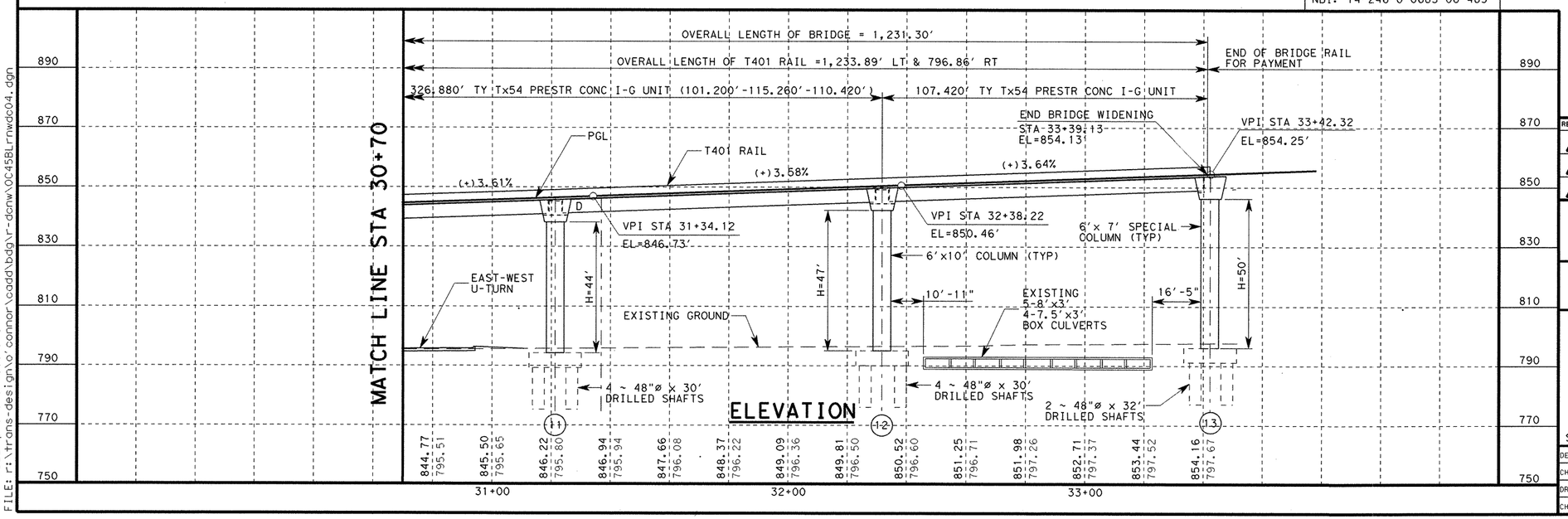

HL-93 LOADING

STATE OF TEXAS
RAMKUMAR KOZHIKOTE
103166
LICENSED PROFESSIONAL ENGINEER
Ramkumar Kozhikote 4/11/2011

REV. No.	DATE	REVISION	BY
△			
△			
△			

PBSJ an Atkins company TBPE REG. # F-474

Texas Department of Transportation Austin District
©2011 by TxDOT

SH 45 / O'CONNOR DRIVE RAMP NORTH-WEST DC BRIDGE LAYOUT

SCALE: 1"=40' SHEET 4 OF 4

DESIGNED: AUS	FED. RD DIV. No.	STATE	PROJECT No.		HIGHWAY No.	
CHECKED: RK	6	TEXAS			LP 1/SH 45	
DRAWN: JF	STATE DISTRICT	COUNTY	CONTROL No.	SECTION No.	JOB No.	SHEET No.
CHECKED: AUS	AUSTIN	WILLIAMSON	0683	06	027	417

PLOT DRIVER: RD*11x17*PDF.plt
PEN TABLE: plotordr*ocon.tbl
FILE: r:\trans-design\o'connor\odd\bdg\r-dcnw\OC45BLrnwdc04.dgn

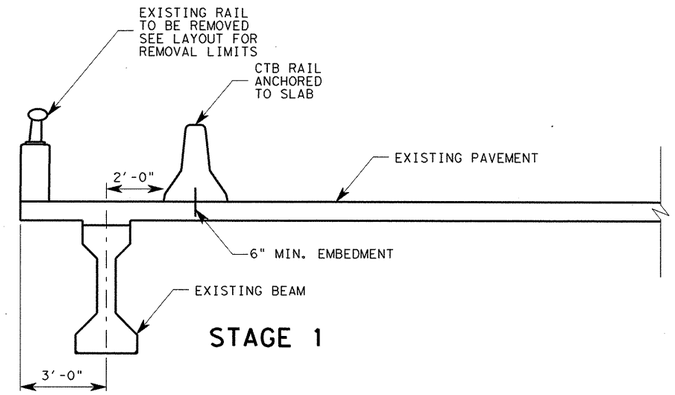

STAGE 1

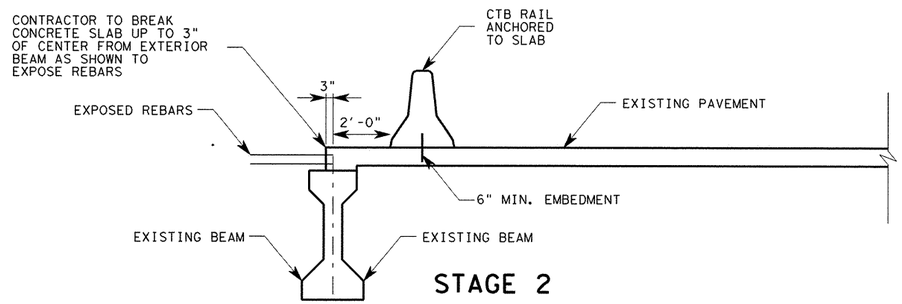

STAGE 2

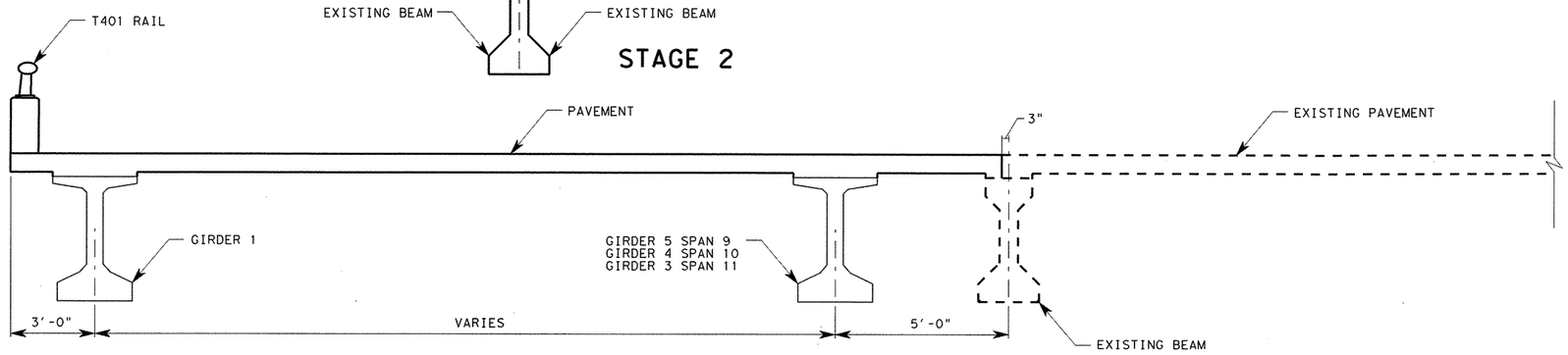

(SPANS 9 THRU 11)

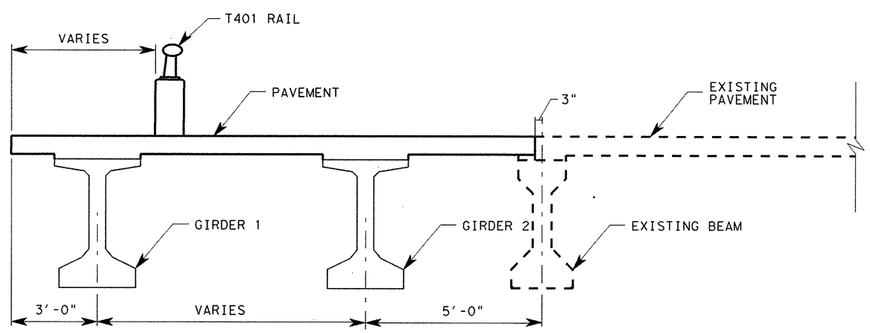

STAGE 3

(SPAN 12)

LIMITS OF BRIDGE WIDENING
STA 29+04.83 TO STA 33+42.32

HL-93
LOADING

STATE OF TEXAS
RAMKUMAR KOZHIKOTE
103166
LICENSED
PROFESSIONAL ENGINEER

Ramkumar Kozhikote
4/11/2011

REV. No.	DATE	REVISION	BY
△			
△			
△			

PBSJ
an Atkins company
TBPE REG. # F-474

Texas Department of Transportation
Austin District
©2011 by TxDOT

SH 45 / O'CONNOR DRIVE RAMP NORTH-WEST DC TYPICAL SECTION CONSTRUCTION STAGING

SCALE: NTS

SHEET 1 OF 1

DESIGNED: AUS	FED. RD DIV. No.	STATE	PROJECT No.			HIGHWAY No.	
CHECKED: RK	6	TEXAS				LP 1/SH 45	
DRAWN: JF	STATE DISTRICT	COUNTY	CONTROL No.	SECTION No.	JOB No.	SHEET No.	
CHECKED: RK	AUSTIN	WILLIAMSON	0683	06	027	418	

PLOT DRIVER: RD*11x17*PDF.plt
PEN TABLE: plotordr*ocon.tbl
FILE: r:\trans-design\o'connor\cadd\bdgyr-danw\0C45CSrnwdc.dgn
DATE: 4/11/2011 TIME: 10:37:01 AM

SUMMARY OF BRIDGE QUANTITIES

ITEM NO.	400	403	416	416	416	416	420	420	420	422	425	428	450	454	471	481	618
DESC. CODE	2001	2001	2004	2078	2006	2079	2003	2017	2018	2003	2068	2001	2063	2001	2003	2012	2018
DESCRIPTION	STRUCT EXCAV	TEMP SPECIAL SHORING	DRILLED SHAFTS (36 IN.)	DRILLED SHAFT CASINGS (36 IN.)	DRILLED SHAFTS (48 IN.)	DRILLED SHAFT CASINGS (48 IN.)	CL C CONC (ABUT)	CL C CONC (BENT) (MASS)	CL C CONC (FOOTING) (MASS)	REINF CONC SLAB (CL S) (HPC)	PRESTR CONC GIRDER (Tx54)	CONC SURF TREAT (CLASS I)	RAIL (TY T401)	SEALED EXP JOINT (4 IN.) (SEJ-A)	GRATE & FRAME	PVC PIPE (SCH 40) (6 IN.)	CONDUIT (PVC) (SCH 40) (2 IN.)
	CY	SF	LF	LF	LF	LF	CY	CY	CY	SF	LF	SY	LF	LF	EA	LF	LF
1 - ABUTMENT			120	30		70	14.9									3	
1 - EXTERIOR BENT	46.1	363			64			86.6	27.9								
11- INTERIOR BENTS	953.5	5214			1320			1111.4	641.8							372	
1 - 220.00' PRESTR. CONC. I-G UNITS										7040	851	799	440	62			880
1 - 172.07' PRESTR. CONC. I-G UNITS										5504	650	624	344	31	1		688
1 - 203.00' PRESTR. CONC. I-G UNITS										6493	774	736	406	31	2		812
1 - 202.00' PRESTR. CONC. I-G UNITS										6466	770	733	404	36	2		808
1 - 326.88' PRESTR. CONC. I-G UNITS										8868	1239	997	327	15	3		654
1 - 110.61' PRESTR. CONC. I-G UNITS										1513	211	172	110	12			220
TOTALS	999.6	5577	120	30	1384	70	14.9	1198	669.7	35884	4495	4061	2031	187	8	375	4062

BEARING SEAT ELEVATIONS

			Girder 1	Girder 2	Girder 3	Girder 4
ABUT	1	(FWD)	792.232	792.449	792.665	792.882
			Girder 1	Girder 2	Girder 3	Girder 4
BENT	2	(BK)	796.745	796.961	797.178	797.395
		(FWD)	797.051	797.268	797.485	797.701
			Girder 1	Girder 2	Girder 3	Girder 4
BENT	3	(BK)	802.514	802.730	802.947	802.164
		(FWD)	802.919	803.135	803.352	803.569
			Girder 1	Girder 2	Girder 3	Girder 4
BENT	4	(BK)	807.220	807.437	807.654	807.870
		(FWD)	807.563	807.779	807.996	808.213
			Girder 1	Girder 2	Girder 3	Girder 4
BENT	5	(BK)	811.864	811.081	812.298	812.514
		(FWD)	812.144	812.361	812.577	812.794
			Girder 1	Girder 2	Girder 3	Girder 4
BENT	6	(BK)	817.283	817.499	817.716	817.933
		(FWD)	817.626	817.842	817.059	818.276
			Girder 1	Girder 2	Girder 3	Girder 4
BENT	7	(BK)	822.765	822.981	823.198	823.414
		(FWD)	823.106	823.323	823.540	823.757

			Girder 1	Girder 2	Girder 3	Girder 4
BENT	8	(BK)	828.102	828.319	828.535	828.752
		(FWD)	828.409	828.626	828.843	829.060
			Girder 1	Girder 2	Girder 3	Girder 4	Girder 5
BENT	9	(BK)	832.450	832.680	832.910	833.141	
		(FWD)	832.727	832.918	833.109	833.301	833.492
			Girder 1	Girder 2	Girder 3	Girder 4	Girder 5
BENT	10	(BK)	836.092	836.242	836.393	836.544	836.695
		(FWD)	836.294	836.492	836.690	836.888	
			Girder 1	Girder 2	Girder 3	Girder 4
BENT	11	(BK)	840.210	840.346	840.483	840.620
		(FWD)	840.480	840.680	840.879	
			Girder 1	Girder 2	Girder 3
BENT	12	(BK)	844.178	844.281	844.387
		(FWD)	844.399	844.596	
			Girder 1	Girder 2
BENT	13	(BK)	848.013	848.116	

Ramkumar Kozhikote
6/21/2011

STATE OF TEXAS
RAMKUMAR KOZHIKOTE
103166
LICENSED
PROFESSIONAL ENGINEER

HL-93
LOADING

REV. No.	DATE	REVISION	BY
△			
△			
△			

PBSJ
an Atkins company TBPE REG. # F-474

Texas Department of Transportation
Austin District
©2011 by TxDOT

SH 45 / O'CONNOR DRIVE RAMP NORTH-WEST DC ESTIMATED QUANTITIES AND BEARING SEAT ELEVATIONS

SHEET 1 OF 1

DESIGNED: RBR	FED. RD DIV. No.	STATE	PROJECT No.			HIGHWAY No.
CHECKED: OAS	6	TEXAS				LP 1/SH 45
DRAWN: RBR	STATE DISTRICT	COUNTY	CONTROL No.	SECTION No.	JOB No.	SHEET No.
CHECKED: OAS	AUSTIN	WILLIAMSON	0683	06	027	419

Rev. 6/29/11

DATE: 6/21/2011 TIME: 12:55:03 PM
PLOT DRIVER: RD*11x17*PDF.plt
PEN TABLE: plotordr*ocon.tbl
FILE: R:\Trans-Design\O'Connor\CADD\BDG\R-DCNW\OC45BOrnwdc.dgn

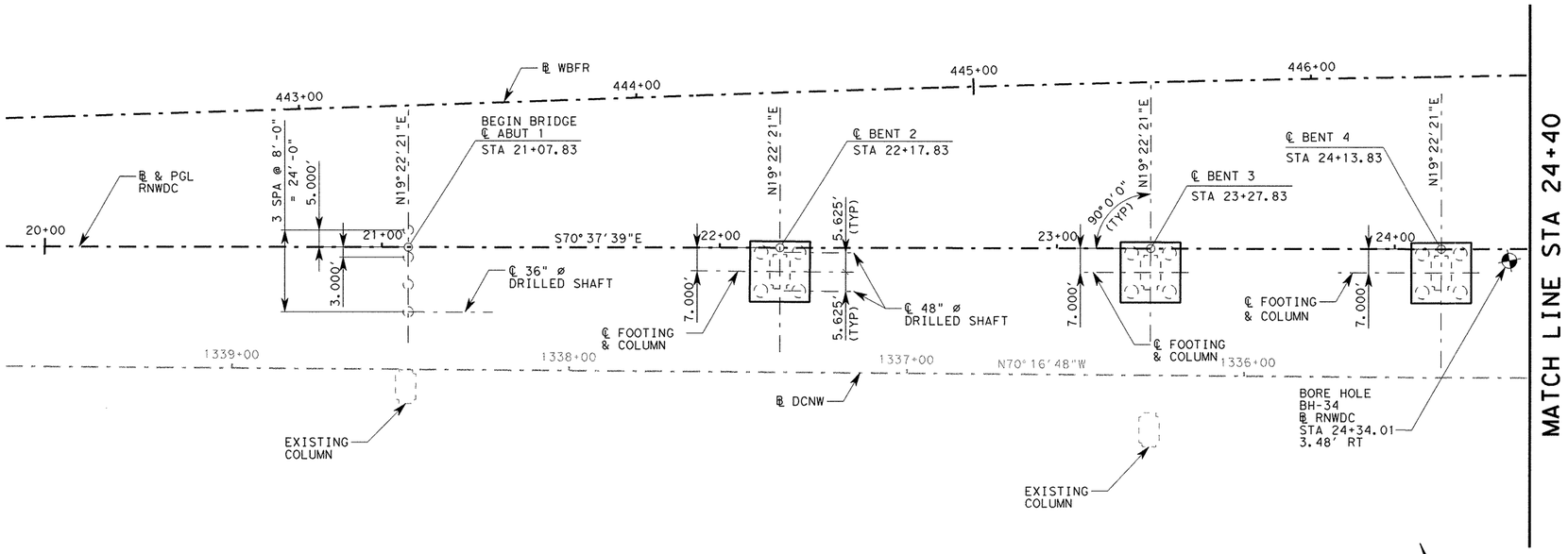

NOTES:

1. DESIGNED ACCORDING TO AASHTO LRFD BRIDGE DESIGN SPECIFICATIONS, 4TH EDITION 2007 AND CURRENT INTERIMS FOR HL-93 LOADING.
2. FOR BORING LOGS SEE "BORING LOGS" SHEETS.
3. FOR LENGTH OF DRILLED SHAFTS, SEE BRIDGE LAYOUTS.
4. FOR DRILL SHAFT LOADS AND DETAILS, SEE FOUNDATION DETAILS, EXCEPT FOR ABUTMENTS.
5. ALL BENTS ARE RADIAL TO CONTROL UNLESS OTHERWISE NOTED.
6. ALL DRILLED SHAFTS ARE 48" DIAMETER UNLESS OTHERWISE NOTED.
7. THE DRILLED SHAFT 28 DAY CONCRETE STRENGTH SHALL BE 3600 PSI
8. AFTER SHAFTS ARE DRILLED TO THE PLAN DEPTH, THE SHAFTS SHOULD BE PROBED TO A DEPTH OF 1.5 TIMES THE SHAFT DIAMETER OR TO A DEPTH OF 5 FT, WHICHEVER IS GREATER. IF VOIDS, EITHER OPEN OR CLAY-FILLED, ARE ENCOUNTERED, THE SHAFTS SHOULD BE ADVANCED BELOW THE VOID(S) AND RE-PROBED. CONTINUE PROBING AND ADVANCING UNTIL NO VOIDS ARE ENCOUNTERED WITHIN A DEPTH OF 1.5 DIAMETERS BELOW THE SHAFT BOTTOM.
9. WHEN SLOUGHING AND/OR GROUNDWATER SEEPAGE ARE ENCOUNTERED DURING DRILLED SHAFT INSTALLATION (I.E. SPOILS ARE RECORDED FROM THE DRILLING OPERATIONS) THE CONTRACTOR SHALL INSTALL PERMANENT CASING AS DIRECTED BY THE ENGINEER TO EXCLUDE THE GROUND WATER.

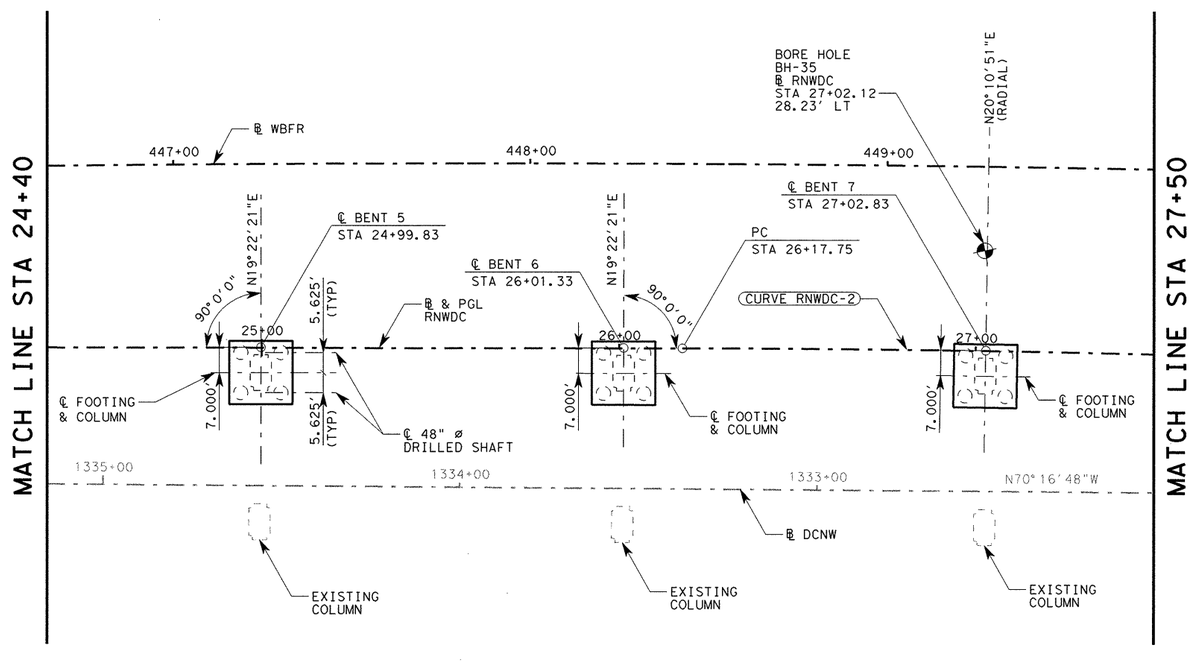

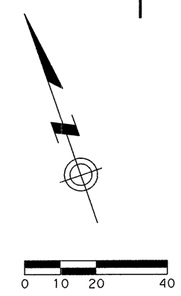

Ramkumar Kozhikote
June 2, 2011

STATE OF TEXAS
RAMKUMAR KOZHIKOTE
103166
LICENSED
PROFESSIONAL ENGINEER

HL-93
LOADING

REV. No.	DATE	REVISION	BY
△			
△			
△			

PBSJ
an Atkins company
TBPE REG. # F-474

Texas Department of Transportation
Austin District
©2011 by TxDOT

SH 45 / O'CONNOR DRIVE RAMP NORTH-WEST DC FOUNDATION LAYOUT

SCALE: 1"=40'
SHEET 1 OF 2

DESIGNED: AUS	FED. RD DIV. No.	STATE	PROJECT No.			HIGHWAY No.
CHECKED: RK	6	TEXAS				LP 1/SH 45
DRAWN: JF	STATE DISTRICT	COUNTY	CONTROL No.	SECTION No.	JOB No.	SHEET No.
CHECKED: AUS	AUSTIN	WILLIAMSON	0683	06	027	420

DATE: 6/2/2011 TIME: 2:06:22 PM
PLOT DRIVER: RD*11x17*PDF.plt
PEN TABLE: plotdrv*ocon.tbl
FILE: r:\trans-design\o'connor\cadd\bdg\r-dcnw\0C45FLrnwdc01.dgn

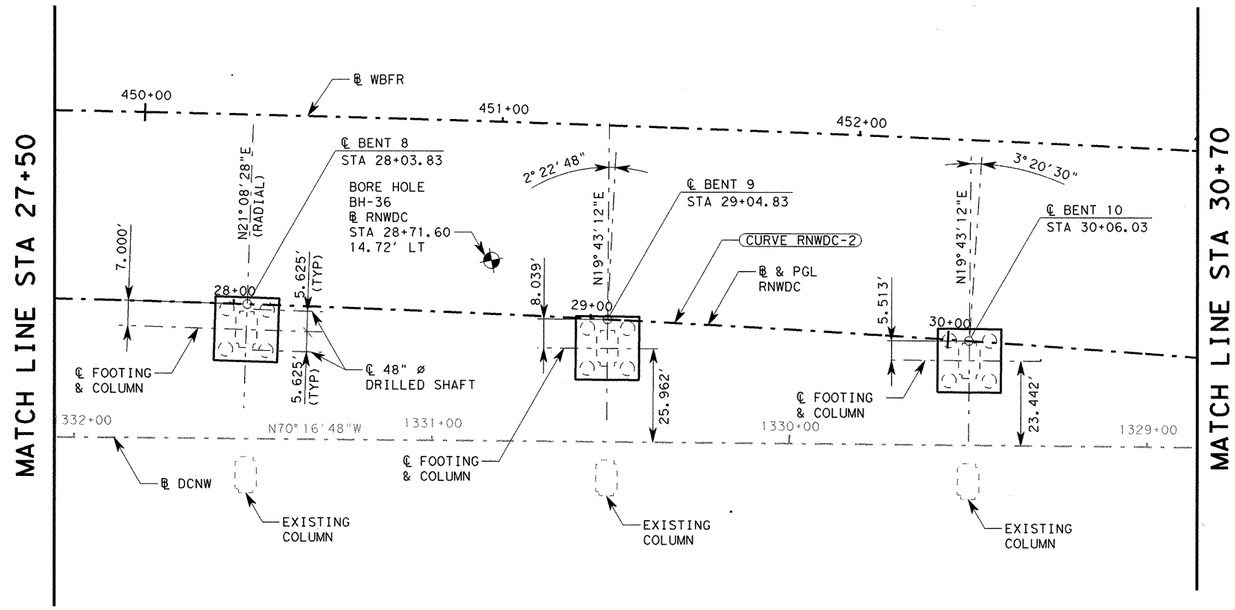

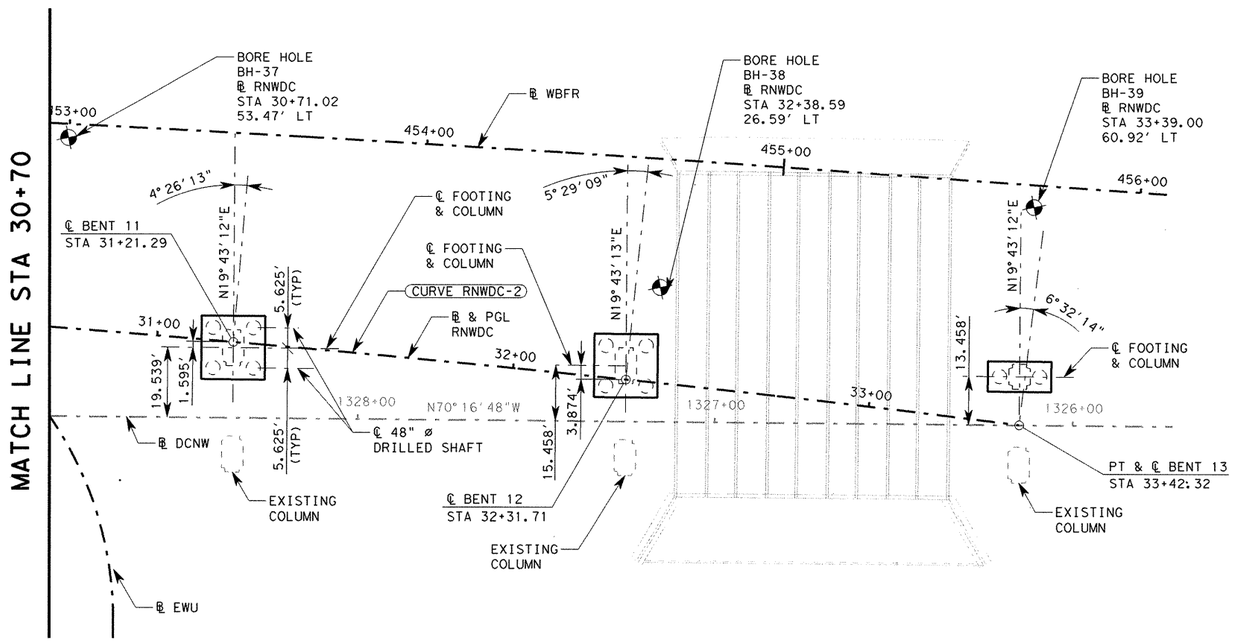

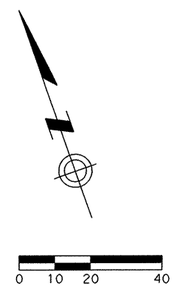

STATE OF TEXAS
RAMKUMAR KOZHIKOTE
103166
LICENSED
PROFESSIONAL ENGINEER

Ramkumar Kozhikote
4/11/2011

HL-93
LOADING

REV. No.	DATE	REVISION	BY
△			
△			
△			

PBSJ
an Atkins company
TBPE REG. # F-474

Texas Department of Transportation
Austin District
©2011 by TxDOT

SH 45 / O'CONNOR DRIVE RAMP NORTH-WEST DC FOUNDATION LAYOUT

SCALE: 1"=40'
SHEET 2 OF 2

DESIGNED: AUS	FED. RD. DIV. No.	STATE	PROJECT No.		HIGHWAY No.	
CHECKED: RK	6	TEXAS			LP 1/SH 45	
DRAWN: JF	STATE DISTRICT	COUNTY	CONTROL No.	SECTION No.	JOB No.	SHEET No.
CHECKED: AUS	AUSTIN	WILLIAMSON	0683	06	027	421

DATE: 4/11/2011 TIME: 10:37:06 AM
PLOT DRIVER: RD*11x17*PDF.plt
PEN TABLE: plotordr*ocon.tbl
FILE: r:\trans-design\o'connor\oddb\bdg\r-dcnw\OC45FLrnwdc02.dgn

DATE: 4/11/2011 TIME: 10:37:07 AM

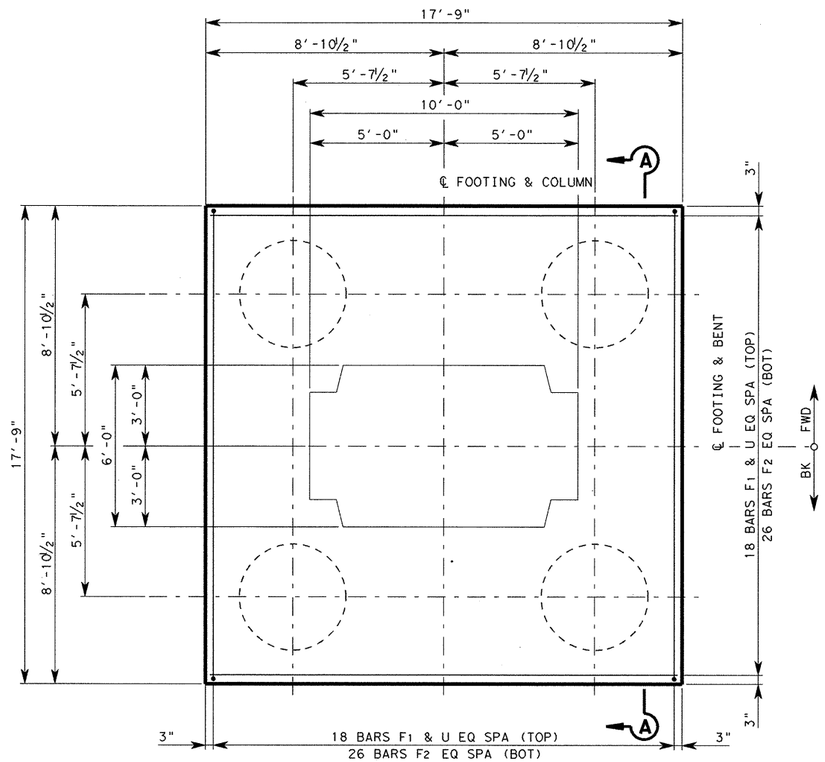

PLAN

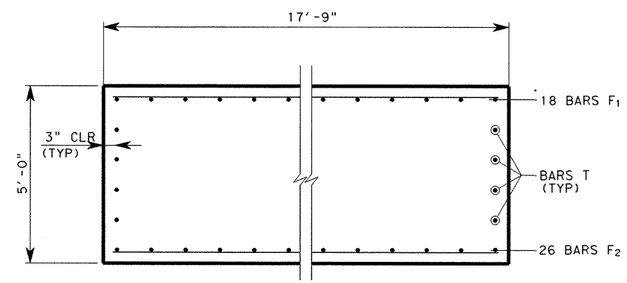

SECTION A-A

BILL OF REINFORCING STEEL (TYP EACH FOOTING)

BAR	NO	SIZE	LENGTH	WEIGHT
F_1	36	#8	17'-3"	1,658
F_2	52	#11	17'-3"	4,766
FD_1	20	#11	16'-2"	1,718
FD_2	32	#11	19'-11"	3,386
T	16	#8	17'-3"	737
U	72	#6	7'-1"	766
‡ REINFORCING STEEL			LB	13,031

‡ FOR CONTRACTOR'S INFORMATION ONLY

NOTES:

1. DESIGNED ACCORDING TO AASHTO LRFD BRIDGE SPECIFICATIONS, 4TH EDITION 2007 AND 2009 CURRENT INTERIMS FOR HL-93 LOADING.
2. ALL DIMENSIONS TO THE REINFORCING STEEL ARE TO THE ℄ OF THE BAR UNLESS OTHERWISE NOTED.
3. SEE "FOUNDATION LAYOUT" FOR FOUNDATION LOCATION AND ORIENTATION.
4. SEE CORRESPONDING BENT SHEET FOR PLACEMENT OF BARS FD TO MATCH COLUMN REINFORCING.
5. SPECIAL SHORING SHALL BE USED AS NOTED WITH THE ABILITY TO POUR AGAINST EARTH. CONTRACTOR SHALL MAINTAIN 3" MINIMUM CLEAR COVER.

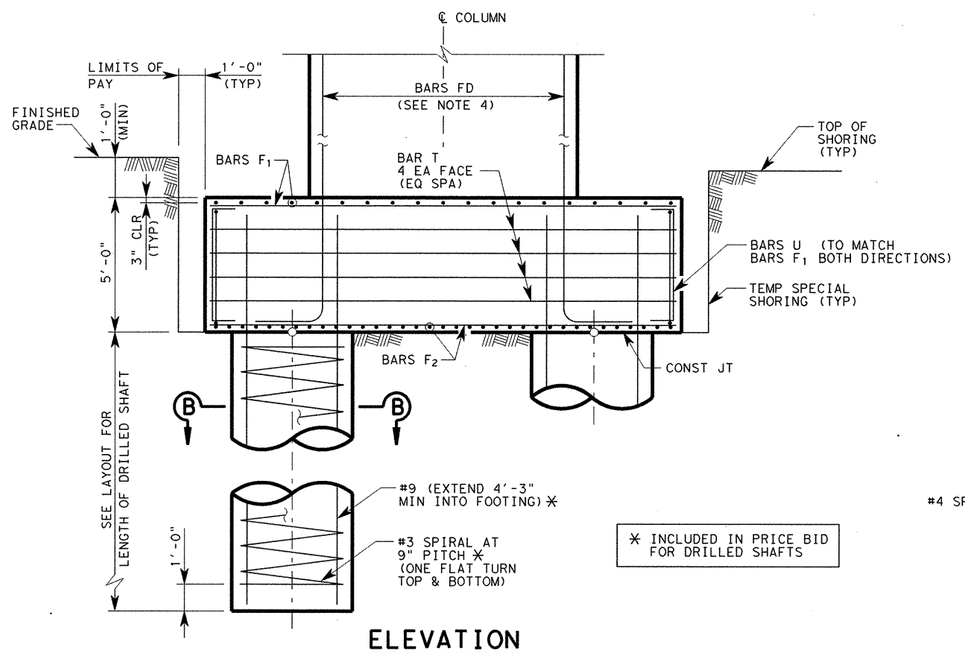

✳ INCLUDED IN PRICE BID FOR DRILLED SHAFTS

ELEVATION

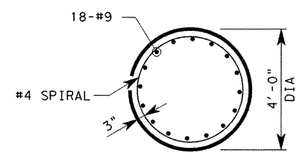

SECTION B-B

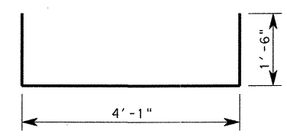

BARS U

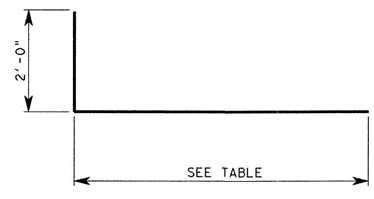

BARS FD1/FD2

HL-93 LOADING

STATE OF TEXAS
RAMKUMAR KOZHIKOTE
103166
LICENSED
PROFESSIONAL ENGINEER

Ramkumar Kozhikote 4/11/2011

REV. No.	DATE	REVISION	BY
△			
△			
△			

PBSJ an Atkins company TBPE REG. # F-474

Texas Department of Transportation Austin District

©2011 by TxDOT

SH 45 / O'CONNOR DRIVE RAMP NORTH-WEST DC FOUNDATION DETAILS BENT 2

SCALE: NTS SHEET 1 OF 3

DESIGNED: KD	FED. RD DIV. No.	STATE	PROJECT No.			HIGHWAY No.	
CHECKED: AUS	6	TEXAS				LP 1/SH 45	
DRAWN: JF	STATE DISTRICT	COUNTY	CONTROL No.	SECTION No.	JOB No.	SHEET No.	
CHECKED: RK	AUSTIN	WILLIAMSON	0683	06	027	422	

PLOT DRIVER: RD*11x17*PDF.plt
PEN TABLE: plotordr*ocon.tbl
FILE: r:\trans-design\o'connor\cadd\bdg\r-dcnw\0C45FDrnwdc01.dgn

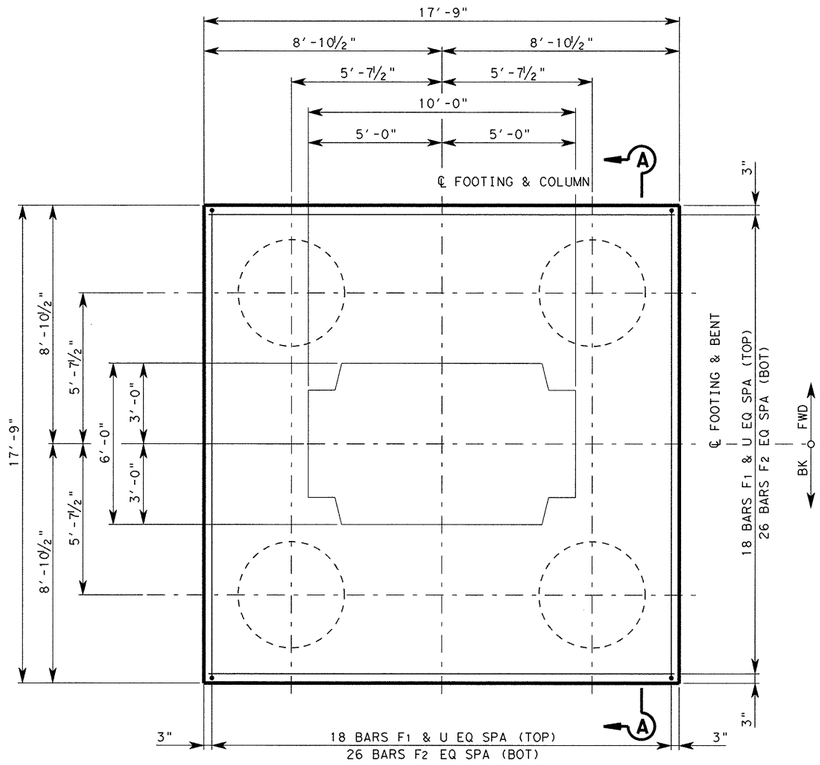

PLAN

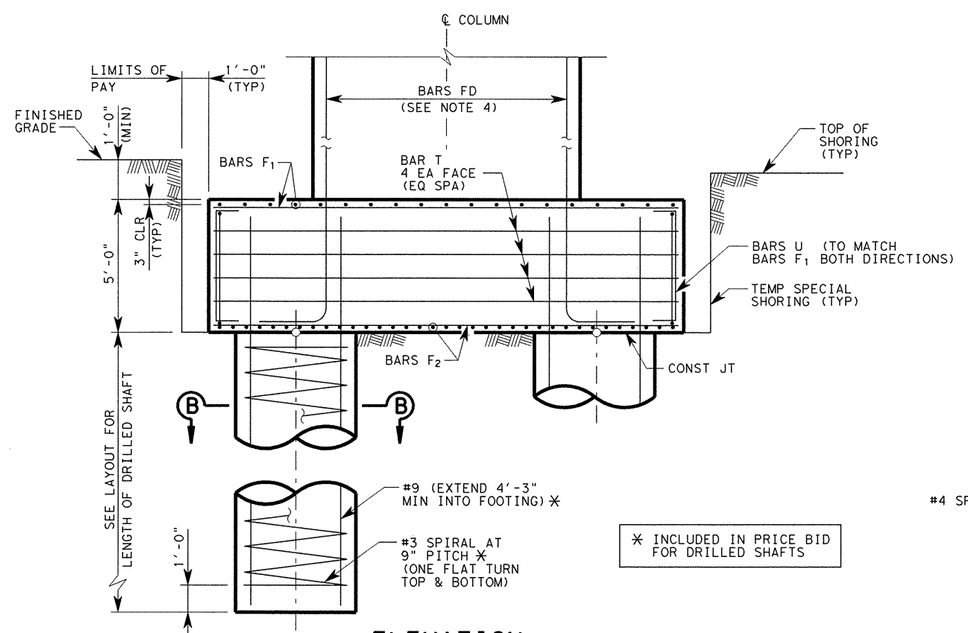

✳ INCLUDED IN PRICE BID FOR DRILLED SHAFTS

ELEVATION

ESTIMATED QUANTITIES

BENT NO	CLASS "C" (MASS) CONC (FOOTING) (CY)	STRUCT EXCAV (CY)	TEMP SPCL SHORING (SF)	DRILL SHAFT (48"ø) (LF)	CALCULATED DRILL SHAFT LOAD (EACH) (TONS)
2	58.3	87	474	120	450
3	58.3	87	474	120	450
4	58.3	87	474	120	450
5	58.3	87	474	120	450
6	58.3	87	474	120	450
7	58.3	87	474	120	450
8	58.3	87	474	120	450
9	58.3	87	474	120	450
10	58.3	87	474	120	450
11	58.3	87	474	120	450
12	58.3	87	474	120	450

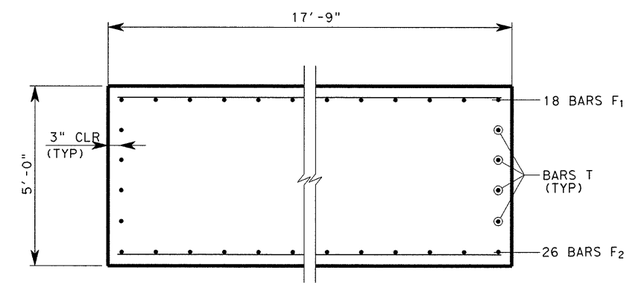

SECTION A-A

BILL OF REINFORCING STEEL (TYP EACH FOOTING)

	BAR	NO	SIZE	LENGTH	WEIGHT
	F_1	36	#8	17'-3"	1,658
	F_2	52	#11	17'-3"	4,766
	FD	52	#11	15'-5"	4,259
	T	16	#8	17'-3"	737
	U	72	#6	7'-1"	766
‡	REINFORCING STEEL			LB	12,186

‡ FOR CONTRACTOR'S INFORMATION ONLY

NOTES:

1. DESIGNED ACCORDING TO AASHTO LRFD BRIDGE SPECIFICATIONS, 4TH EDITION 2007 AND 2009 CURRENT INTERIMS FOR HL-93 LOADING.
2. ALL DIMENSIONS TO THE REINFORCING STEEL ARE TO THE ℄ OF THE BAR UNLESS OTHERWISE NOTED.
3. SEE "FOUNDATION LAYOUT" FOR FOUNDATION LOCATION AND ORIENTATION.
4. SEE CORRESPONDING BENT SHEET FOR PLACEMENT OF BARS FD TO MATCH COLUMN REINFORCING.
5. SPECIAL SHORING SHALL BE USED AS NOTED WITH THE ABILITY TO POUR AGAINST EARTH. CONTRACTOR SHALL MAINTAIN 3" MINIMUM CLEAR COVER.

Ramkumar Kozhikote
June 2, 2011

STATE OF TEXAS
RAMKUMAR KOZHIKOTE
103166
LICENSED
PROFESSIONAL ENGINEER

HL-93 LOADING

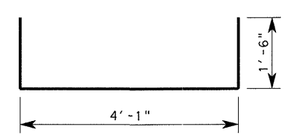

BARS U

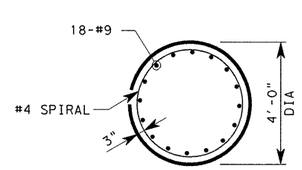

SECTION B-B

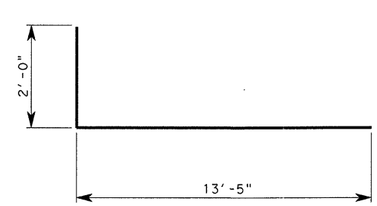

BARS FD

REV. No.	DATE	REVISION	BY
△			
△			
△			

PBSJ an Atkins company TBPE REG. # F-474

Texas Department of Transportation
Austin District
©2011 by TxDOT

SH 45 / O'CONNOR DRIVE RAMP NORTH-WEST DC FOUNDATION DETAILS BENTS 3 THRU 12

SCALE: NTS — SHEET 2 OF 3

DESIGNED: KD	FED. RD DIV. NO.	STATE	PROJECT No.			HIGHWAY No.	
CHECKED: AUS	6	TEXAS				LP 1/SH 45	
DRAWN: JF	STATE DISTRICT	COUNTY		CONTROL No.	SECTION No.	JOB No.	SHEET No.
CHECKED: RK	AUSTIN	WILLIAMSON		0683	06	027	423

PLOT DRIVER: RD*11x17*PDF.plt
PEN TABLE: plotdrv*ocon.tbl
FILE: r:\trans-design\o'connor\cadd\bdg\r-dcnw\0C45FDrnwdc02.dgn
DATE: 6/2/2011 TIME: 2:06:24 PM

ESTIMATED QUANTITIES / FOOTING					
COL NO	CLASS "C" (MASS) CONC (FOOTING) (CY)	STRUCT EXCAV (CY)	TEMP SPCL SHORING (SF)	DRILL SHAFT (48"ø) (LF)	CALCULATED DRILL SHAFT LOAD (EACH) (TONS)
13	27.9	46	363	64	185

NOTES:

1. DESIGNED ACCORDING TO AASHTO LRFD BRIDGE DESIGN SPECIFICATIONS, 4TH EDITION, 2007 AND 2009 CURRENT INTERIMS FOR HL-93 LOADING.
2. ALL DIMENSIONS TO THE REINFORCING STEEL ARE TO THE ℄ OF THE BAR UNLESS OTHERWISE NOTED.
3. SEE "FOUNDATION LAYOUT" FOR FOUNDATION LOCATION AND ORIENTATION.
4. SEE CORRESPONDING BENT SHEET FOR PLACEMENT OF BARS FD TO MATCH COLUMN REINFORCING.
5. SPECIAL SHORING SHALL BE USED AS NOTED WITH THE ABILITY TO POUR AGAINST EARTH. CONTRACTOR SHALL MAINTAIN 3" MINIMUM CLEAR COVER.

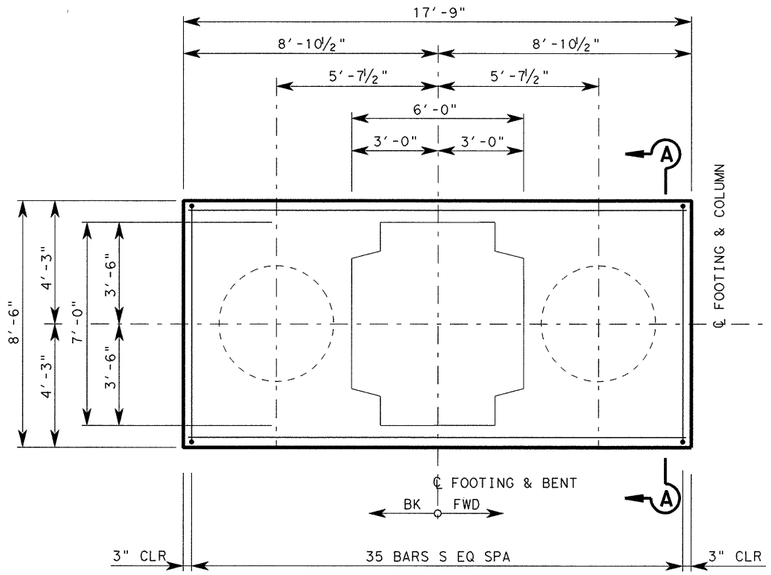

PLAN

FOUNDATION #13 BILL OF REINFORCING STEEL (TYP EACH FOOTING)				
BAR	NO	SIZE	LENGTH	WEIGHT
F_1	9	#8	17'-3"	415
F_2	9	#11	17'-3"	825
FD	42	#11	15'-5"	3,440
T	8	#10	17'-3"	594
S	35	#6	26'-9"	1,406
U_1	8	#6	10'-10"	130
U_2	18	#6	6'-4"	171
† REINFORCING STEEL			LB	6,981

† FOR CONTRACTOR'S INFORMATION ONLY

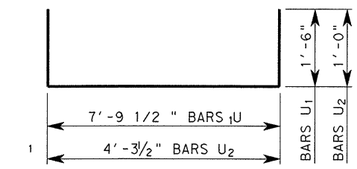

BARS U

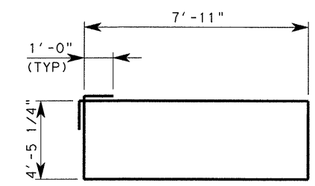

BARS S

Ramkumar Kozhikote
June 2, 2011

STATE OF TEXAS
RAMKUMAR KOZHIKOTE
103166
LICENSED
PROFESSIONAL ENGINEER

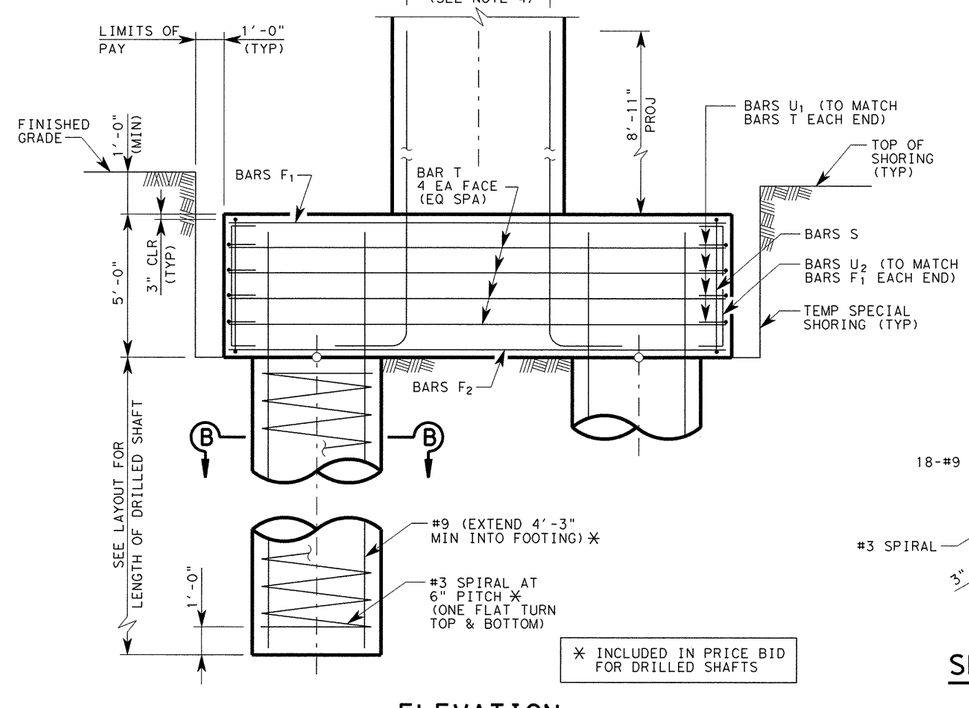

ELEVATION

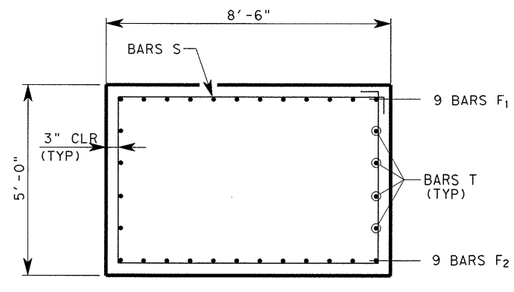

SECTION A-A

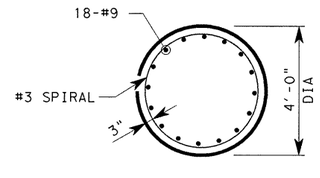

SECTION B-B

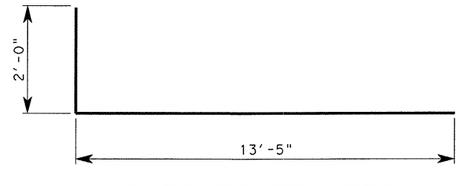

BARS FD/FD1/FD2

HL-93 LOADING

REV. NO.	DATE	REVISION	BY
△			
△			
△			

PBSJ an Atkins company TBPE REG. # F-474

Texas Department of Transportation
Austin District
©2011 by TxDOT

SH 45 / O'CONNOR DRIVE RAMP NORTH-WEST DC FOUNDATION DETAILS BENT 13

SCALE: NTS SHEET 3 OF 3

DESIGNED: AUS	FED. RD DIV. NO.	STATE	PROJECT No.			HIGHWAY No.	
CHECKED: RK	6	TEXAS				LP 1/SH 45	
DRAWN: JF	STATE DISTRICT	COUNTY		CONTROL No.	SECTION No.	JOB No.	SHEET No.
CHECKED: RK	AUSTIN	WILLIAMSON		0683	06	027	424

TIME: 2:06:26 PM
DATE: 6/2/2011
PLOT DRIVER: RD*11x17*PDF.plt
PEN TABLE: plotord*ocon.tbl
FILE: r:\trans-design\o'connor\cadd\bdg\r-dcnw\0C45FDrnwdc03.dgn

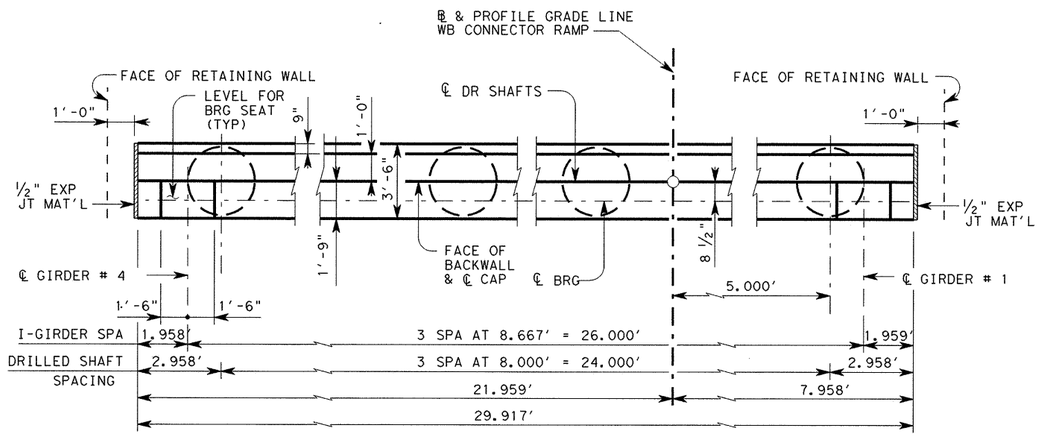

PLAN

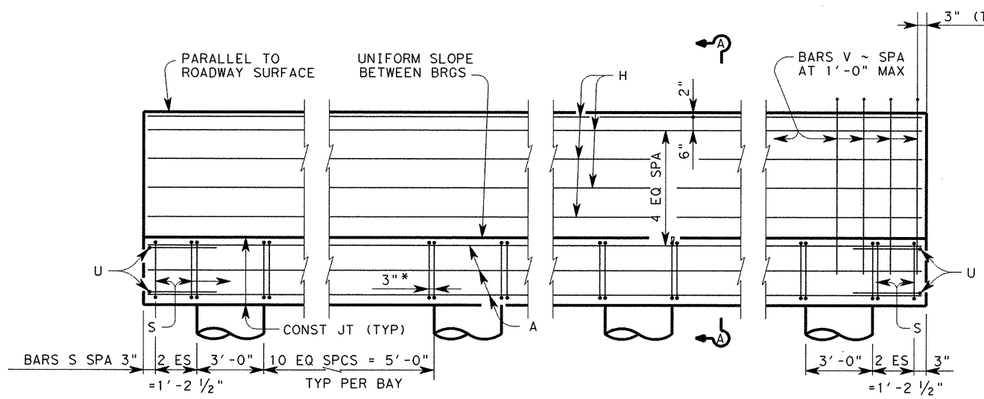

* TYPICAL AT EACH FACE OF DRILLED SHAFT

ELEVATION

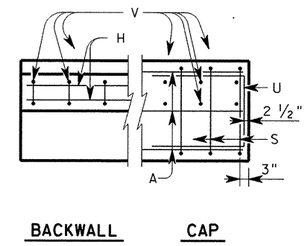

CORNER DETAILS

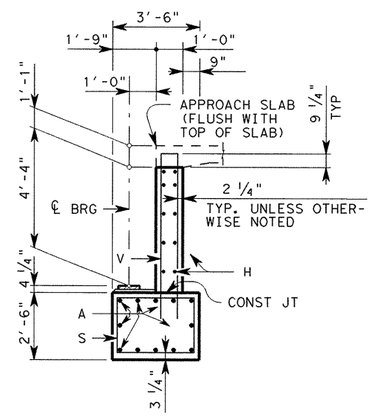

SECTION A-A

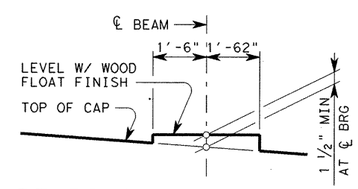

BEARING SEAT DETAIL

(BEARING SURFACE SHALL BE CLEAN AND FREE OF ALL LOOSE MATERIAL BEFORE PLACING BEARING PAD.)

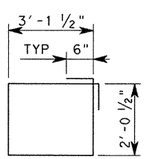

BARS S

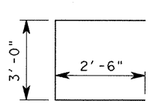

BARS U

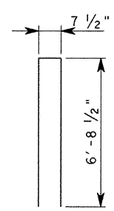

BARS V

TABLE OF ESTIMATED QUANTITIES

(REINFORCING QUANTITITES SHOWN FOR CONTRACTOR'S INFORMATION ONLY)

BAR	NO.	SIZE	LENGTH	WEIGHT
A	12	11	29'-5"	1,875
H	10	5	29'-5"	307
S	47	5	11'-4"	556
U	4	6	8'-0"	48
V	31	5	14'-1/2"	454
REINFORCING STEEL			LB	3,240
CLASS "C" CONCRETE			CY	14.9

GENERAL NOTES:

DESIGNED ACCORDING TO AASHTO 2007 STANDARD AND CURRENT INTERIM SPECIFICATIONS.
CONCRETE STRENGTH SHALL BE F'C = 3,600 PSI.
ALL REINFORCING STEEL SHALL BE GRADE 60.
CALCULATED FOUNDATION LOADS ~
CAP DRILLED SHAFTS = 185 TONS/DRILLED SHAFT

SEE FOUNDATION DETAIL STANDARD SHEET, FD, FOR ALL FOUNDATION DETAILS AND NOTES.

SEE SEJ STANDARD SHEET FOR DETAILS AND LENGTH OF SEJ TO BE PLACED WITH ABUTMENT.

STATE OF TEXAS
RAMKUMAR KOZHIKOTE
103166
LICENSED PROFESSIONAL ENGINEER

Ramkumar Kozhikote
4/11/2011

HL-93 LOADING

REV. No.	DATE	REVISION	BY
△			
△			
△			

PBSJ an Atkins company TBPE REG. # F-474

Texas Department of Transportation
Austin District
©2011 by TxDOT

SH 45 / O'CONNOR DRIVE RAMP NORTH-WEST DC ABUTMENT 1

SCALE: NOT TO SCALE — SHEET 1 OF 1

DESIGNED: AUS	FED. RD DIV. No.	STATE	PROJECT No.			HIGHWAY No.	
CHECKED: RK	6	TEXAS				LP 1/SH 45	
DRAWN: JF	STATE DISTRICT	COUNTY	CONTROL No.	SECTION No.	JOB No.	SHEET No.	
CHECKED: RK	AUSTIN	WILLIAMSON	0683	06	027	425	

DATE: 4/11/2011 TIME: 10:37:11 AM
PLOT DRIVER: RD*11x17*PDF.plt
PEN TABLE: plotordr*ocon.tbl
FILE: r:\trans-design\o'connor\cadd\bdg\r-dcnw\0C45ABrnwdc.dgn

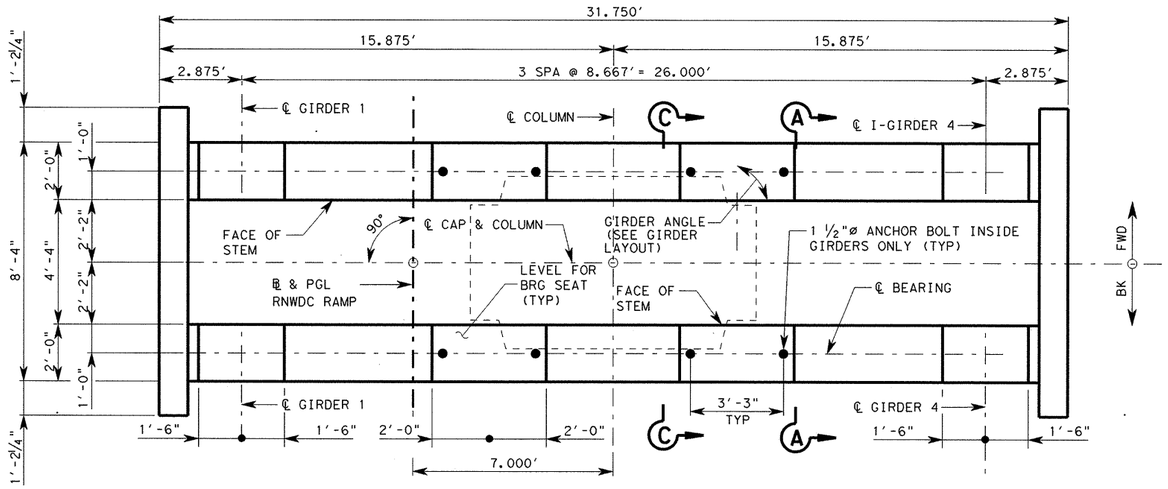

PLAN

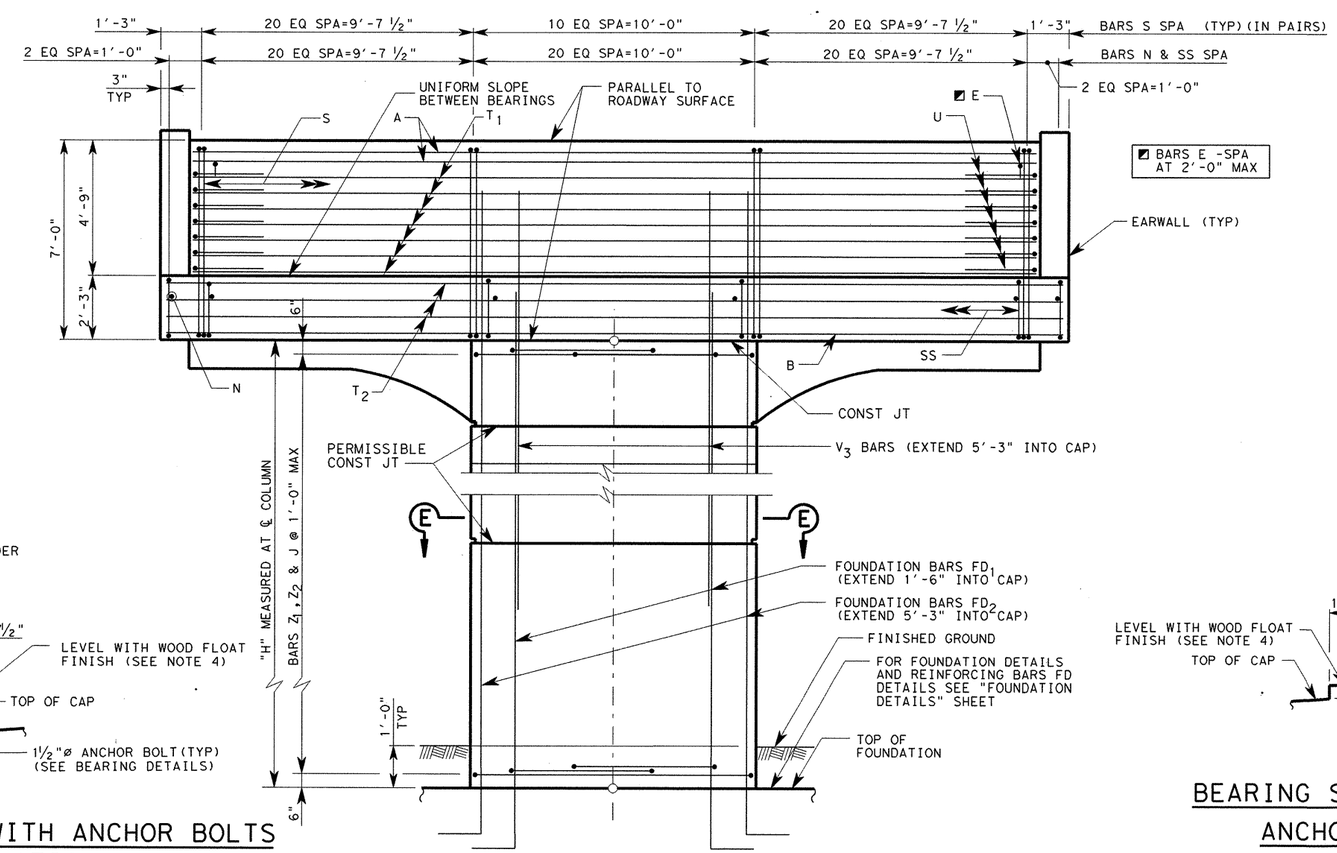

BEARING SEAT WITH ANCHOR BOLTS ELEVATION

ELEVATION

BEARING SEAT WITHOUT ANCHOR BOLTS ELEVATION

GENERAL NOTES:

1. DESIGNED ACCORDING TO AASHTO LRFD BRIDGE SPECIFICATIONS, 4TH EDITION 2007 AND 2009 CURRENT INTERIMS FOR HL-93 LOADING.
2. CONCRETE STRENGTH F'C=3600 PSI.
3. ALL REINFORCING SHALL BE GRADE 60.
4. BEARING SURFACE SHALL BE CLEAN AND FREE OF ALL LOOSE MATERIAL BEFORE PLACING BEARING PAD.
5. SEE "AESTHETIC TREATMENT REINFORCEMENT DETAILS" SHEET FOR AESTHETIC TREATMENT REINFORCEMENT DETAILS AND DIMENSIONS.
6. SKEW ANGLES MEASURED NORMAL TO LOCAL TANGENT IF ON CURVE.
7. ANCHOR BOLTS SHALL BE ASTM F1554 GRADE 55 BOLTS WITH ASTM A 563 GRADE A HEAVY-HEX NUTS.

STATE OF TEXAS
RAMKUMAR KOZHIKOTE
103166
LICENSED PROFESSIONAL ENGINEER

Ramkumar Kozhikote
4/11/2011

HL-93 LOADING

REV. No.	DATE	REVISION	BY
△			
△			
△			

PBSJ
an Atkins company
TBPE REG. # F-474

Texas Department of Transportation
Austin District
©2011 by TxDOT

SH 45 / O'CONNOR DRIVE RAMP NORTH-WEST DC BENT 2

SCALE: NTS
SHEET 1 OF 12

DESIGNED: AUS	FED. RD DIV. No.	STATE	PROJECT No.			HIGHWAY No.	
CHECKED: RK	6	TEXAS				LP 1/SH 45	
DRAWN: JF	STATE DISTRICT	COUNTY	CONTROL No.	SECTION No.	JOB No.	SHEET No.	
CHECKED: RK	AUSTIN	WILLIAMSON	0683	06	027	426	

DATE: 4/11/2011 TIME: 10:37:13 AM
PLOT DRIVER: RD*11x17*PDF.plt
PEN TABLE: plotordr*ocon.tbl
FILE: r:\trans-design\o'connor\oddd\bdgr-dcnw\OC45BTrnwdc01.dgn

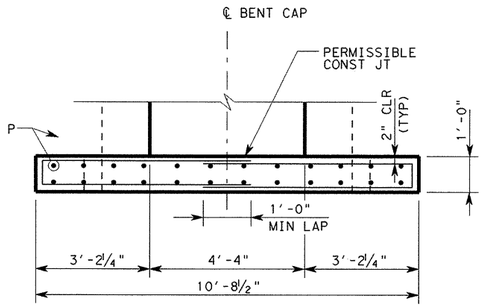

PLAN

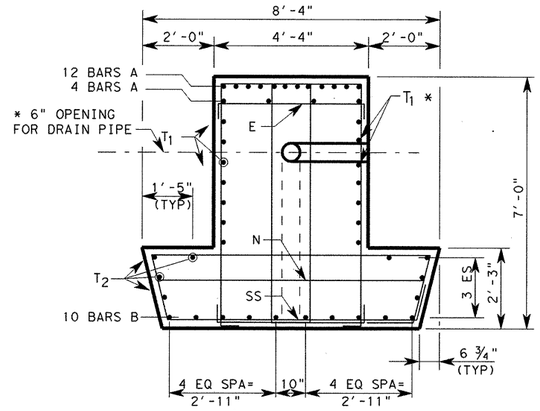

*ADJUST T_1 BARS TO MISS PVC PIPE

SECTION D-D

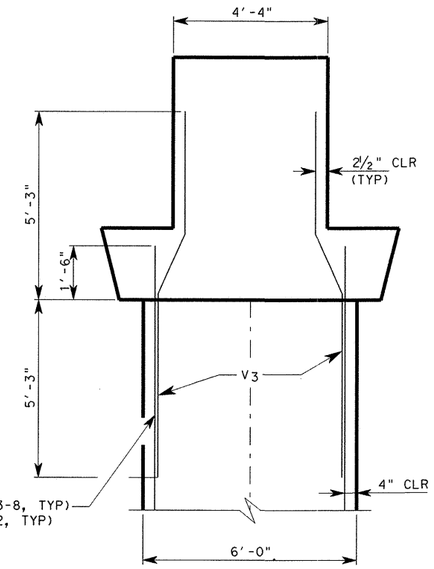

SECTION C-C

(CAP REINFORCEMENT NOT SHOWN FOR CLARITY)

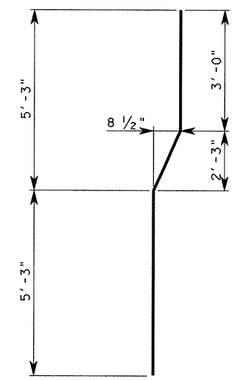

BARS V3

* VARIES DEPENDING ON ROADWAY GRADE, 4" MIN AT ℄ BEARING ON LOW SIDE.

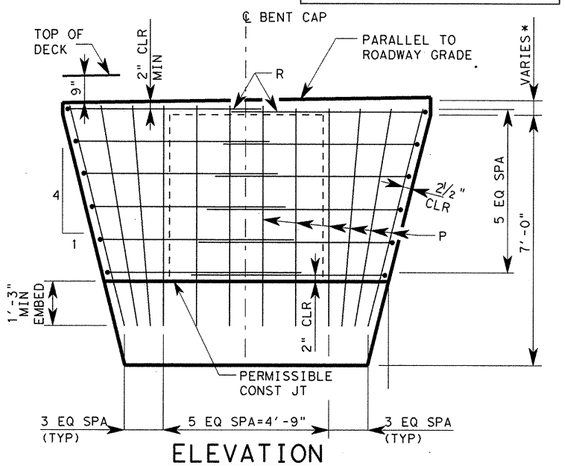

ELEVATION

EARWALL DETAIL

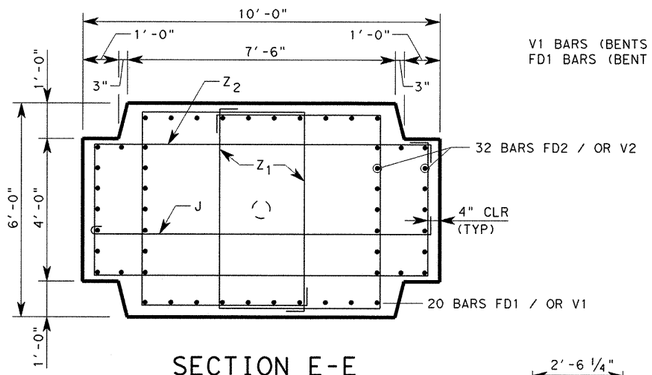

SECTION E-E

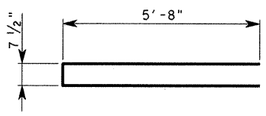

BARS R

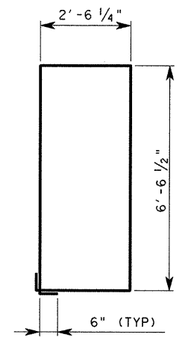

BARS S

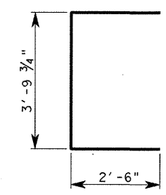

BARS U

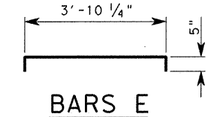

BARS E

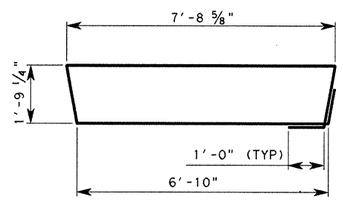

BARS SS

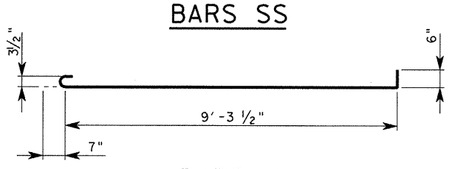

BARS J

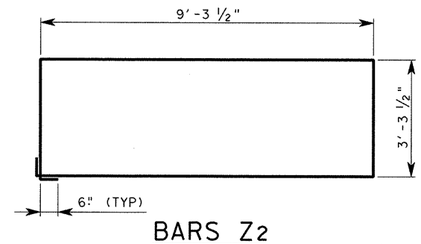

BARS Z2

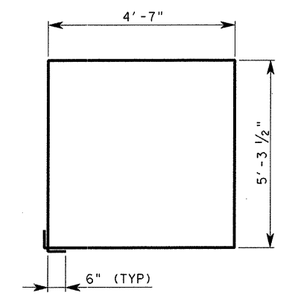

BARS Z1

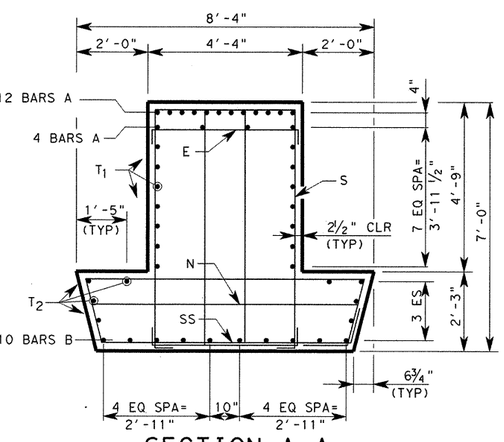

SECTION A-A

HL-93 LOADING

STATE OF TEXAS
RAMKUMAR KOZHIKOTE
103166
LICENSED PROFESSIONAL ENGINEER

Ramkumar Kozhikote 4/11/2011

REV. No.	DATE	REVISION	BY
△			
△			
△			

PBSJ an Atkins company TBPE REG. # F-474

Texas Department of Transportation
Austin District
©2011 by TxDOT

SH 45 / O'CONNOR DRIVE RAMP NORTH WEST DC BENTS 2-8

SCALE: NTS

SHEET 2 OF 12

DESIGNED: KD	FED. RD DIV. No.	STATE	PROJECT No.			HIGHWAY No.	
CHECKED: AUS	6	TEXAS				LP 1/SH 45	
DRAWN: JF	STATE DISTRICT	COUNTY	CONTROL No.	SECTION No.	JOB No.	SHEET No.	
CHECKED: RK	AUSTIN	WILLIAMSON	0683	06	027	427	

DATE: 4/11/2011 TIME: 10:37:14 AM
PLOT DRIVER: RD*11x17*PDF.plt
PEN TABLE: plotordr*ocon.tbl
FILE: r:\trans-design\o'connor\cadd\bdg\r-donw\0045BTrnwdc02.dgn

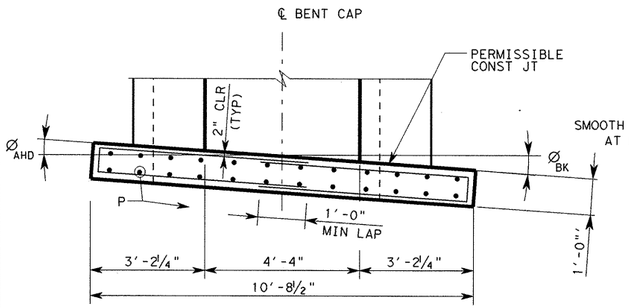

PLAN

BENT NO.	Ø BK	Ø AHD
9	1.9°	1.9°
10	2.8°	2.8°
11	4.0°	4.0°
12	3.8°	1.6°

* VARIES DEPENDING ON ROADWAY GRADE, 4" MIN AT ℄ BEARING ON LOW SIDE.

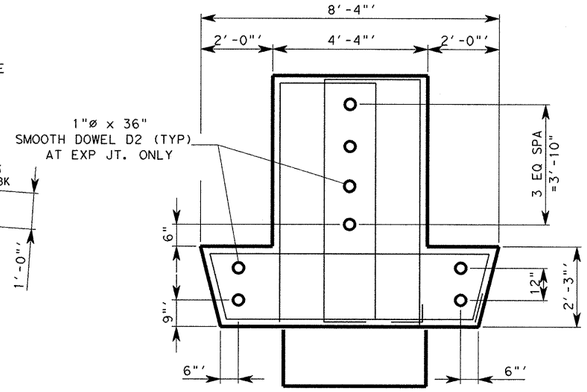

DOWEL TYPICAL DETAIL

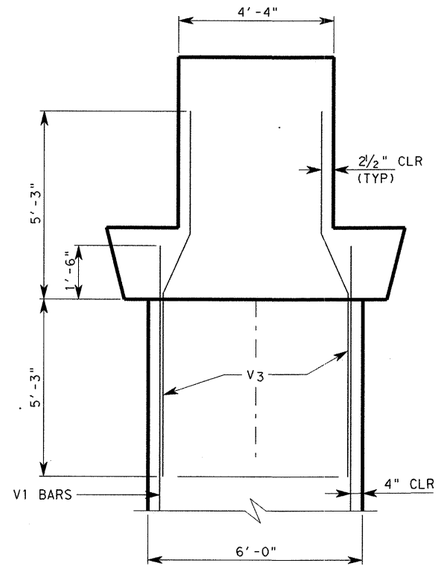

SECTION C-C

(CAP REINFORCEMENT NOT SHOWN FOR CLARITY)

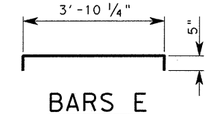

BARS E

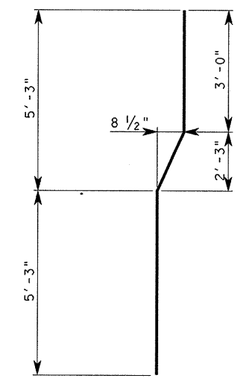

BARS V3

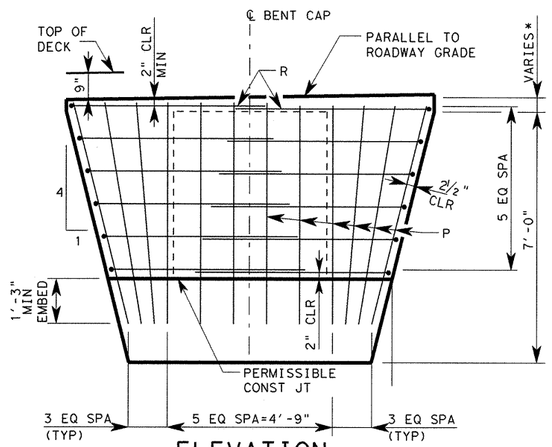

ELEVATION

EARWALL DETAIL

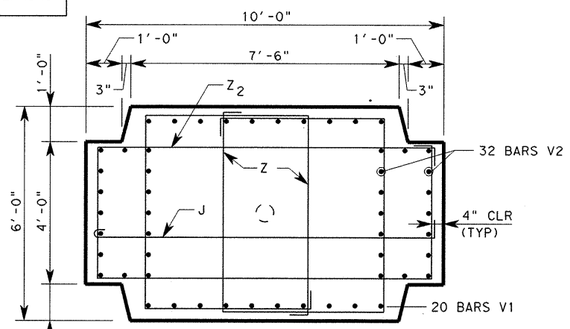

SECTION E-E

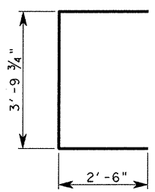

BARS U

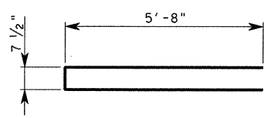

BARS R

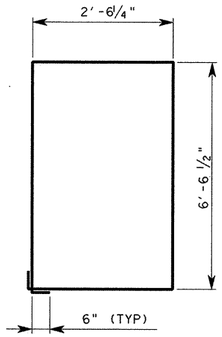

BARS S

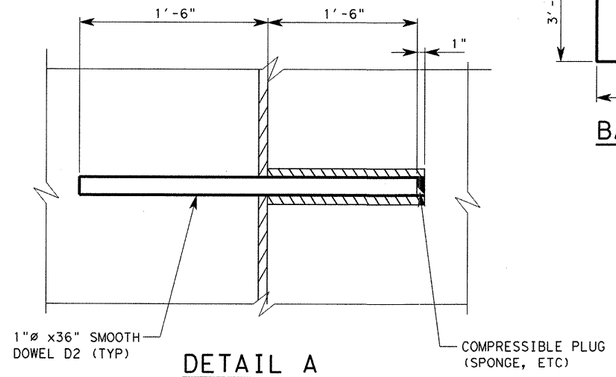

DETAIL A

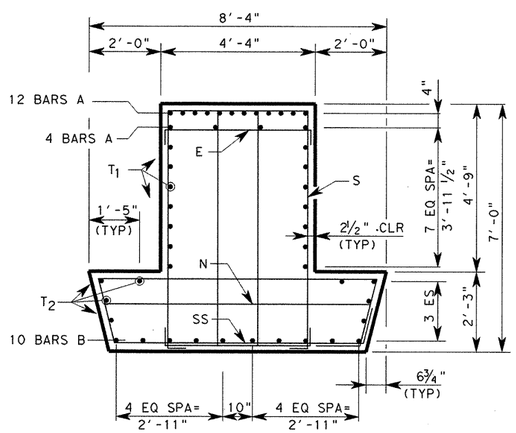

SECTION A-A

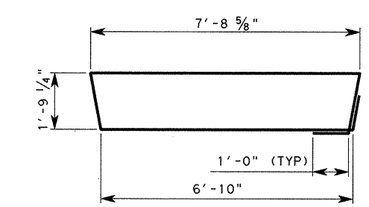

BARS SS

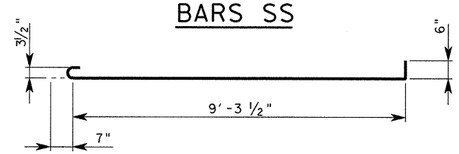

BARS J

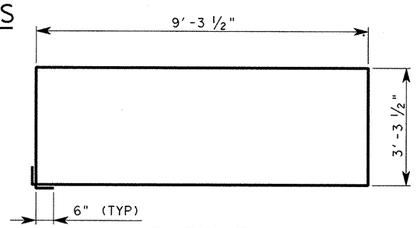

BARS Z2

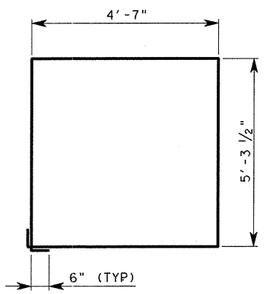

BARS Z1

HL-93 LOADING

STATE OF TEXAS
RAMKUMAR KOZHIKOTE
103166
LICENSED PROFESSIONAL ENGINEER

Ramkumar Kozhikote 4/11/2011

REV. No.	DATE	REVISION	BY
△			
△			
△			

PBSJ an Atkins company TBPE REG. # F-474

Texas Department of Transportation
Austin District

©2011 by TxDOT

SH 45 / O'CONNOR DRIVE RAMP NORTH WEST DC BENTS 9-12

SCALE: NTS

SHEET 3 OF 12

DESIGNED: KD	FED. RD DIV. No.	STATE	PROJECT No.			HIGHWAY No.
CHECKED: AUS	6	TEXAS				LP 1/SH 45
DRAWN: JF	STATE DISTRICT	COUNTY	CONTROL No.	SECTION No.	JOB No.	SHEET No.
CHECKED: RK	AUSTIN	WILLIAMSON	0683	06	027	428

TIME: 10:37:15 AM
DATE: 4/11/2011
PLOT DRIVER: RD*11x17*PDF.plt
PEN TABLE: plotordr*ocon.tbl
FILE: r:\trans-design\o'connor\cadd\bdg\r-donw\0C45BTrnwdc03.dgn

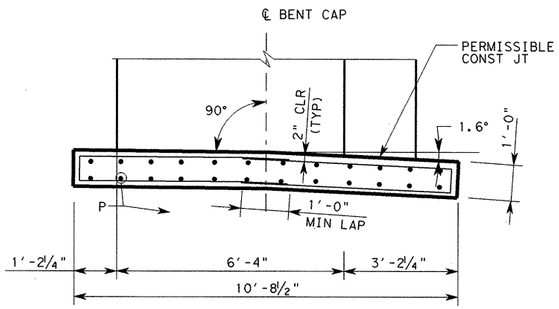

PLAN

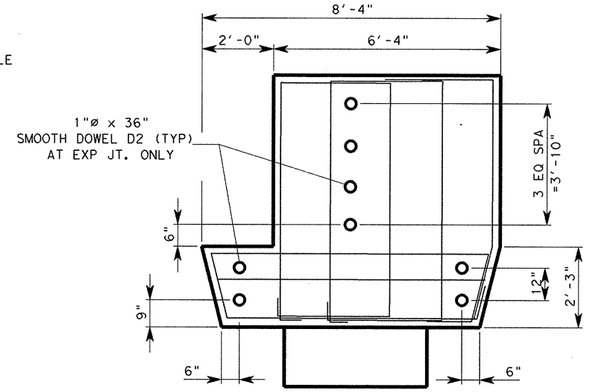

DOWEL TYPICAL DETAIL

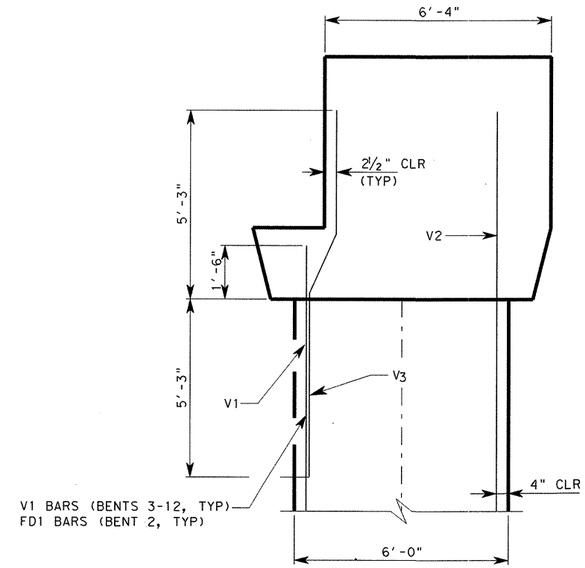

SECTION C-C

(CAP REINFORCEMENT NOT SHOWN FOR CLARITY)

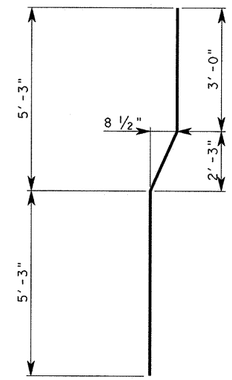

BARS V3

* VARIES DEPENDING ON ROADWAY GRADE, 4" MIN AT ℄ BEARING ON LOW SIDE.

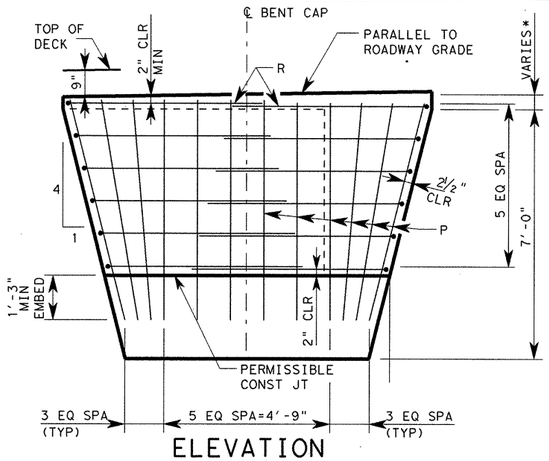

ELEVATION

EARWALL DETAIL

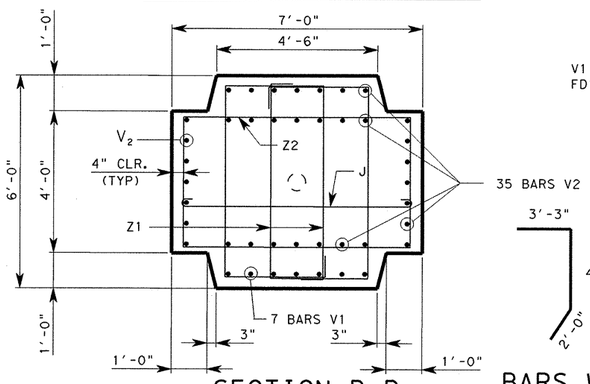

SECTION B-B

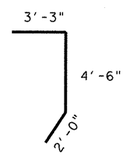

BARS W

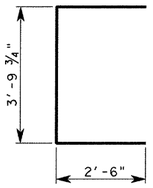

BARS U

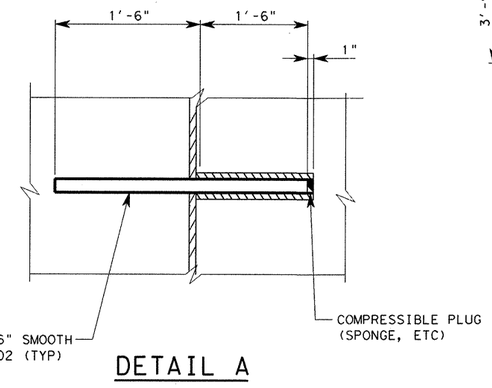

DETAIL A

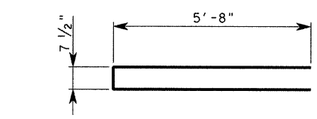

BARS R

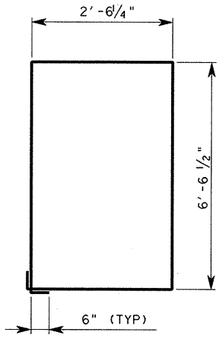

BARS S

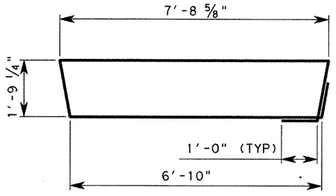

BARS SS

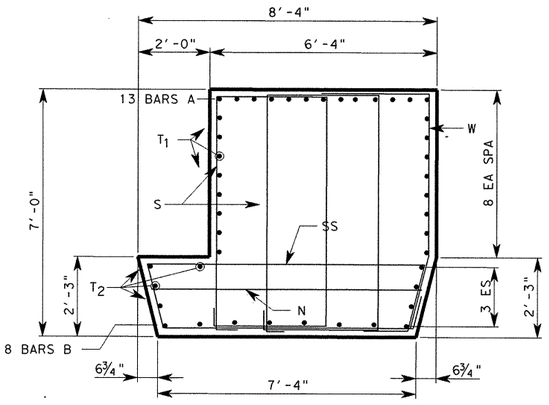

SECTION A-A

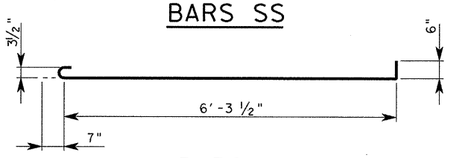

BARS J

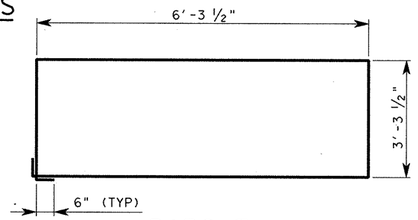

BARS Z2

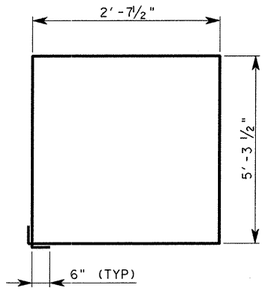

BARS Z1

HL-93 LOADING

STATE OF TEXAS
RAMKUMAR KOZHIKOTE
103166
LICENSED PROFESSIONAL ENGINEER

Ramkumar Kozhikote 4/11/2011

REV. No.	DATE	REVISION	BY
△			
△			
△			

PBSJ an Atkins company TBPE REG. # F-474

Texas Department of Transportation
Austin District
©2011 by TxDOT

SH 45 / O'CONNOR DRIVE RAMP NORTH WEST DC BENT 13

SCALE: NTS SHEET 4 OF 12

DESIGNED: KD	FED. RD DIV. No.	STATE	PROJECT No.			HIGHWAY No.	
CHECKED: AUS	6	TEXAS				LP 1/SH 45	
DRAWN: JF	STATE DISTRICT	COUNTY	CONTROL No.	SECTION No.	JOB No.	SHEET No.	
CHECKED: RK	AUSTIN	WILLIAMSON	0683	06	027	429	

DATE: 4/11/2011 TIME: 10:37:16 AM
PLOT DRIVER: RD*11x17*PDF.plt
PEN TABLE: plotordr*ocon.tbl
FILE: r:\trans-design\o'connor\cadd\bdg\r-dcnw\OC45BTrnwdc04.dgn

TABLE OF ESTIMATED QUANTITIES (BENTS 2-8 CAP)

BAR	NO.	SIZE	LENGTH	WEIGHT
A	16	#11	29'-5"	2,501
B	10	#9	31'-5"	1,068
E	16	#5	4'-8"	78
K1	16	#6	3'-0"	72
N	65	#5	7'-5"	503
P	48	#5	6'-1"	305
R	24	#4	12'-2"	195
S	102	#5	19'-2"	2,039
SS	65	#6	20'-2"	1,969
T1	14	#6	29'-5"	619
T2	8	#6	31'-5"	378
U	14	#6	8'-10"	186
TOTAL REINFORCING STEEL *			LB	9,911
CLASS "C" (MASS) CONC (BENT)			CY	46.8

* FOR CONTRACTOR'S INFORMATION ONLY

NO K1 BARS FOR BENTS 2 &4. ADJUST TOTAL REINFORCING STEEL ACCORDINGLY.

TABLE OF ESTIMATED QUANTITIES (BENT 9 CAP)

BAR	NO.	SIZE	LENGTH	WEIGHT
A	16	#11	32'-6"	2,763
B	10	#9	33'-6"	1,139
D2	8	1" ø	3'-0"	64
E	18	#5	4'-8"	88
K1	16	#6	3'-0"	72
N	69	#5	7'-5"	534
P	48	#5	6'-1"	305
R	24	#4	12'-2"	195
S	114	#5	19'-2"	2,279
SS	69	#6	20'-2"	2,090
T1	14	#6	32'-6"	683
T2	8	#6	33'-6"	403
U	14	#6	8'-10"	186
TOTAL REINFORCING STEEL *			LB	10,800
CLASS "C" (MASS) CONC (BENT)			CY	49.8

* FOR CONTRACTOR'S INFORMATION ONLY

TABLE OF ESTIMATED QUANTITIES (BENT 10 CAP)

BAR	NO.	SIZE	LENGTH	WEIGHT
A	16	#11	27'-5"	2,331
B	10	#9	28'-5"	966
D2	8	1" ø	3'-0"	64
E	15	#5	4'-8"	73
K1	16	#6	3'-0"	72
N	57	#5	7'-5"	441
P	24	#5	6'-1"	152
R	12	#4	12'-2"	98
S	90	#5	19'-2"	1,799
SS	57	#6	20'-2"	1,727
T1	14	#6	27'-5"	577
T2	8	#6	28'-5"	341
U	14	#6	8'-10"	186
TOTAL REINFORCING STEEL *			LB	8,826
CLASS "C" (MASS) CONC (BENT)			CY	41.6

* FOR CONTRACTOR'S INFORMATION ONLY

TABLE OF ESTIMATED QUANTITIES (BENT 11 CAP)

BAR	NO.	SIZE	LENGTH	WEIGHT
A	16	#11	19'-8"	1,672
B	10	#9	20'-8"	703
D2	8	1" ø	3'-0"	64
E	11	#5	4'-8"	54
K1	16	#6	3'-0"	72
N	42	#5	7'-5"	325
P	24	#5	6'-1"	152
R	12	#4	12'-2"	98
S	60	#5	19'-2"	1,199
SS	42	#6	20'-2"	1,272
T1	14	#6	19'-8"	4141
T2	8	#6	20'-8"	248
U	14	#6	8'-10"	186
TOTAL REINFORCING STEEL *			LB	6,458
CLASS "C" (MASS) CONC (BENT)			CY	31.6

* FOR CONTRACTOR'S INFORMATION ONLY

TABLE OF ESTIMATED QUANTITIES (BENT 12 CAP)

BAR	NO.	SIZE	LENGTH	WEIGHT
A	16	#11	11'-6"	978
B	10	#9	12'-6"	425
D2	8	1" ø	3'-0"	64
E	7	#5	4'-8"	34
N	26	#5	7'-5"	201
P	24	#5	6'-1"	152
R	12	#4	12'-2"	98
S	26	#5	19'-2"	520
SS	26	#6	20'-2"	788
T1	14	#6	11'-6"	242
T2	8	#6	12'-6"	150
U	14	#6	8'-10"	186
TOTAL REINFORCING STEEL *			LB	3,837
CLASS "C" (MASS) CONC (BENT)			CY	18.4

* FOR CONTRACTOR'S INFORMATION ONLY

TABLE OF ESTIMATED QUANTITIES (BENT 13 CAP)

BAR	NO.	SIZE	LENGTH	WEIGHT
A	13	#11	8'-6"	587
B	8	#9	7'-6"	204
D	8	1" ø	3'-0"	64
N	19	#5	7'-5"	147
P	24	#5	6'-1"	152
R	12	#4	12'-0"	96
S	18	#5	19'-2"	360
SS	19	#6	20'-2"	576
T1	16	#6	8'-6"	204
T2	7	#6	7'-6"	79
U	16	#6	10'-9¾"	260
W	16	#5	9'-9"	163
X	9	#5	7'-8"	104
Z	4	#5	7'-6"	94
TOTAL REINFORCING STEEL *			LB	3,089
CLASS "C" (MASS) CONC (BENT)			CY	17.2

* FOR CONTRACTOR'S INFORMATION ONLY

Ramkumar Kozhikote
June 2, 2011

STATE OF TEXAS
RAMKUMAR KOZHIKOTE
103166
LICENSED
PROFESSIONAL ENGINEER

HL-93
LOADING

REV. No.	DATE	REVISION	BY
△			
△			
△			

PBSJ
an Atkins company TBPE REG. # F-474

Texas Department of Transportation
Austin District
©2011 by TxDOT

SH 45 / O'CONNOR DRIVE RAMP NORTH WEST DC BENTS 2-13

SCALE: NTS SHEET 5 OF 12

DESIGNED: KD	FED. RD DIV. No.	STATE	PROJECT No.			HIGHWAY No.	
CHECKED: AUS	6	TEXAS				LP 1/SH 45	
DRAWN: JF	STATE DISTRICT	COUNTY	CONTROL No.	SECTION No.	JOB No.	SHEET No.	
CHECKED: RK	AUSTIN	WILLIAMSON	0683	06	027	430	

DATE: 6/2/2011 TIME: 2:06:28 PM
PLOT DRIVER: RD*11x17*PDF.plt
PEN TABLE: plotordr*ocon.tbl
FILE: r:\trans-design\o'connor\cadd\bdg\r-dcnw\0C458Trnwdc05.dgn

① BENTS 3-13 TABLE OF VARIABLE COLUMN QUANTITIES

BENT/ COL	COLUMN HEIGHT "H"	BARS V_1 #11x			BARS V_2 #11x			BARS V_3 #8 x 10'-6"			BARS Z_1 #5 x			BARS Z_2 #5 x			BARS J #4 x			② TOTAL ESTIMATED QUANTITIES PER COLUMN REINF STEEL *	CLASS "C" CONC (BENT)
		NO.	LENGTH (FT)	WEIGHT (LB)	NO.	LENGTH (FT)	WEIGHT (LB)	NO.	LENGTH (FT)	WEIGHT (LB)	NO.	LENGTH (FT)	WEIGHT (LB)	NO.	LENGTH (FT)	WEIGHT (LB)	NO.	LENGTH (FT)	WEIGHT (LB)	LB	CY
3/1	12.5'	20	14'-0"	1,488	32	17'-9"	3,018	20	10'-6"	561	25	20'-9"	541	13	26'-2"	341	13	10'-4 ½"	87	6,035	25.7
4/1	15.9'	20	17'-5"	1,849	32	21'-2"	3,596	20	10'-6"	561	32	20'-9"	688	16	26'-2"	434	16	10'-4 ½"	110	7,238	32.7
5/1	19.8'	20	21'-4"	2,263	32	25'-1"	4,259	20	10'-6"	561	40	20'-9"	857	20	26'-2"	540	20	10'-4 ½"	137	8,618	40.7
6/1	24.3'	20	25'-10"	2,742	32	29'-7"	5,024	20	10'-6"	561	49	20'-9"	1,052	24	26'-2"	663	24	10'-4 ½"	168	10,210	50.0
7/1	29'	20	30'-6"	3,241	32	34'-3"	5,823	20	10'-6"	561	58	20'-9"	1,255	29	26'-2"	791	29	10'-4 ½"	201	11,872	59.6
8/1	33.7'	20	35'-2"	3,740	32	38'-11"	6,622	20	10'-6"	561	67	20'-9"	1,459	34	26'-2"	920	34	10'-4 ½"	234	13,535	69.3
9/1	37.5'	20	39'-0"	4,144	32	42'-9"	7,268	20	10'-6"	561	75	20'-9"	1,623	38	26'-2"	1,023	38	10'-4 ½"	260	14,880	77.1
10/1	40.6'	20	42'-1"	4,474	32	45'-10"	7,795	20	10'-6"	561	81	20'-9"	1,757	41	26'-2"	1,108	41	10'-4 ½"	281	15,976	83.5
11/1	44'	20	45'-6"	4,835	32	49'-3"	8,373	20	10'-6"	561	88	20'-9"	1,905	44	26'-2"	1,201	44	10'-4 ½"	305	17,179	90.4
12/1	47'	20	48'-6"	5,154	32	52'-3"	8,883	20	10'-6"	561	94	20'-9"	2,034	47	26'-2"	1,283	47	10'-4 ½"	326	18,240	96.6
13/1	50'	7	51'-6"	1,915	35	55'-3"	10,274	7	10'-6"	196	100	16'-10"	1,756	50	20'-2"	1,052	50	7'-4 ½"	246	15,439	69.4

* FOR CONTRACTOR'S INFORMATION ONLY

ADJUST NUMBER OF BARS Z_2 AND J BY 1 AND NUMBER OF BARS Z_1 BY 2 FOR EACH 1 LF VARIATION IN "H" VALUE.

BENTS 3 THRU 12:
ADJUST REINFORCING STEEL TOTAL BY 385.5 LB AND CLASS "C" CONC BY 2.0556 CY FOR EACH 1 LF VARIATION IN "H" VALUE.

BENT 13:
ADJUST REINFORCING STEEL TOTAL BY 285.4 LB AND CLASS "C" CONC BY 1.3889 CY FOR EACH 1 LF VARIATION IN "H" VALUE.

① BENT 2 TABLE OF VARIABLE COLUMN QUANTITIES

BENT/ COL	COLUMN HEIGHT "H"	BARS V_3 #8 x 10'-6"			BARS Z_1 #5 x 20'-9"			BARS Z_2 #5 x 26'-2"			BARS J #4 x 10'-4 ½"			② TOTAL ESTIMATED QUANTITIES PER COLUMN REINF STEEL *	CLASS "C" CONC (BENT)
		NO.	LENGTH (FT)	WEIGHT (LB)	NO.	LENGTH (FT)	WEIGHT (LB)	NO.	LENGTH (FT)	WEIGHT (LB)	NO.	LENGTH (FT)	WEIGHT (LB)	LB	CY
2/1	8.2'	20	10'-6"	561	17	20'-9"	368	9	26'-2"	246	9	10'-4 ½"	62	1,237	16.9

* FOR CONTRACTOR'S INFORMATION ONLY

ADJUST NUMBER OF BARS Z_2 AND J BY 1 AND NUMBER OF BARS Z_1 BY 2 FOR EACH 1 LF VARIATION IN "H" VALUE.

ADJUST REINFORCING STEEL TOTAL BY 56 LB AND CLASS "C" CONC BY 2.0556 CY FOR EACH 1 LF VARIATION IN "H" VALUE.

STATE OF TEXAS
RAMKUMAR KOZHIKOTE
103166
LICENSED PROFESSIONAL ENGINEER

HL-93 LOADING

Ramkumar Kozhikote 4/11/2011

REV. No.	DATE	REVISION	BY
△			
△			
△			

PBSJ an Atkins company TBPE REG. # F-474

Texas Department of Transportation
Austin District
©2011 by TxDOT

SH 45 / O'CONNOR DRIVE
RAMP NORTH WEST DC
BENTS 2 THRU 13

SCALE: NTS SHEET 6 OF 12

DESIGNED: AUS	FED. RD DIV. No.	STATE	PROJECT No.			HIGHWAY No.	
CHECKED: RK	6	TEXAS				LP 1/SH 45	
DRAWN: JF	STATE DISTRICT	COUNTY	CONTROL No.	SECTION No.	JOB No.	SHEET No.	
CHECKED: RK	AUSTIN	WILLIAMSON	0683	06	027	431	

DATE: 4/11/2011 TIME: 10:37:19 AM
PLOT DRIVER: RD*11x17*PDF.plt
PEN TABLE: plotordr*ocon.tbl
FILE: r:\trans-design\o'connor\cadd\bdgyr-dcnw\0C458Trnwdc06.dgn

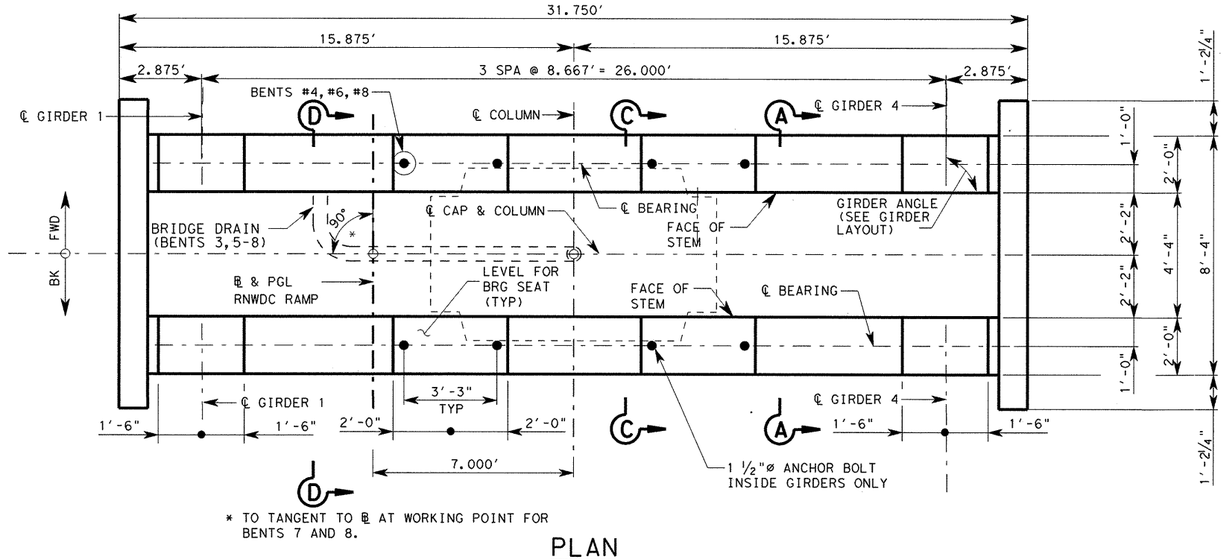

* TO TANGENT TO ℄ AT WORKING POINT FOR BENTS 7 AND 8.

PLAN

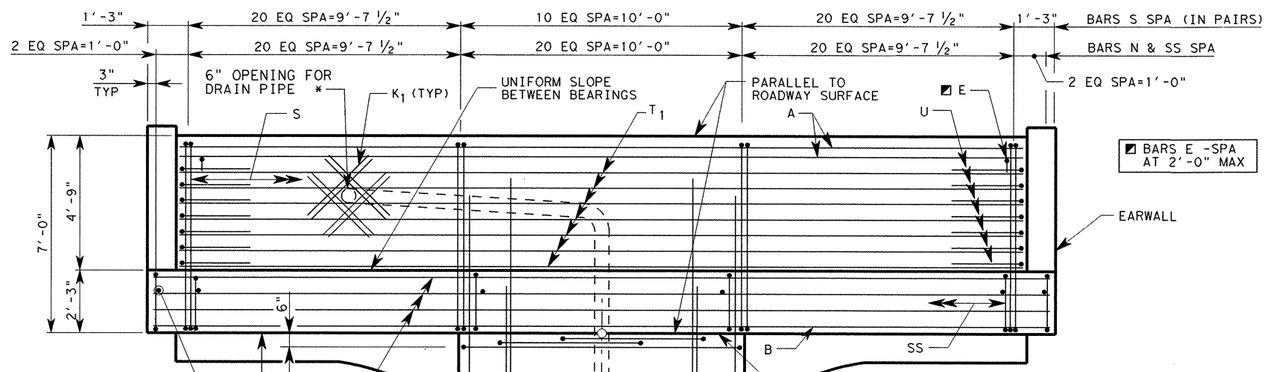

ELEVATION

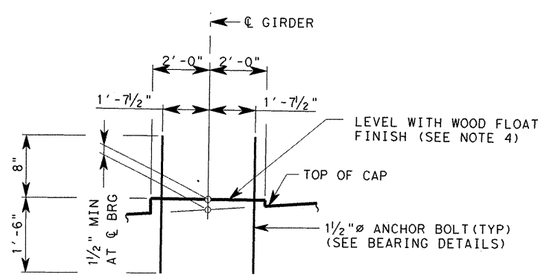

BEARING SEAT WITH ANCHOR BOLTS ELEVATION

GENERAL NOTES:

1. DESIGNED ACCORDING TO AASHTO LRFD BRIDGE SPECIFICATIONS, 4TH EDITION 2007 AND 2009 CURRENT INTERIMS FOR HL-93 LOADING.
2. CONCRETE STRENGTH F'C=3600 PSI.
3. ALL REINFORCING SHALL BE GRADE 60.
4. BEARING SURFACE SHALL BE CLEAN AND FREE OF ALL LOOSE MATERIAL BEFORE PLACING BEARING PAD.
5. SEE "AESTHETIC TREATMENT REINFORCEMENT DETAILS" SHEET FOR AESTHETIC TREATMENT REINFORCEMENT DETAILS AND DIMENSIONS.
6. SKEW ANGLES MEASURED NORMAL TO LOCAL TANGENT IF ON CURVE.
7. ANCHOR BOLTS SHALL BE ASTM F1554 GRADE 55 BOLTS WITH ASTM A 563 GRADE A HEAVY-HEX NUTS.

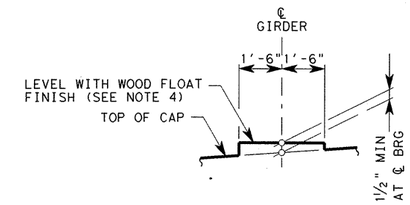

BEARING SEAT WITHOUT ANCHOR BOLTS ELEVATION

HL-93 LOADING

STATE OF TEXAS
RAMKUMAR KOZHIKOTE
103166
LICENSED PROFESSIONAL ENGINEER

Ramkumar Kozhikote 4/11/2011

REV. No.	DATE	REVISION	BY
△			
△			
△			

PBSJ an Atkins company TBPE REG. # F-474

Texas Department of Transportation Austin District

©2011 by TxDOT

SH 45 / O'CONNOR DRIVE RAMP NORTH-WEST DC BENTS 3 THRU 8

SCALE: NTS

SHEET 7 OF 12

DESIGNED: AUS	FED. RD DIV. No.	STATE	PROJECT No.			HIGHWAY No.	
CHECKED: RK	6	TEXAS				LP 1/SH 45	
DRAWN: JF	STATE DISTRICT	COUNTY	CONTROL No.	SECTION No.	JOB No.	SHEET No.	
CHECKED: RK	AUSTIN	WILLIAMSON	0683	06	027	432	

PLOT DRIVER: RD*11x17*PDF.plt
PEN TABLE: plotdrv*ocon.tbl
FILE: r:\trans-design\o'connor\cadd\bdgyr-donw\OC45BTrnwdc07.dgn
DATE: 4/11/2011 TIME: 10:37:21 AM

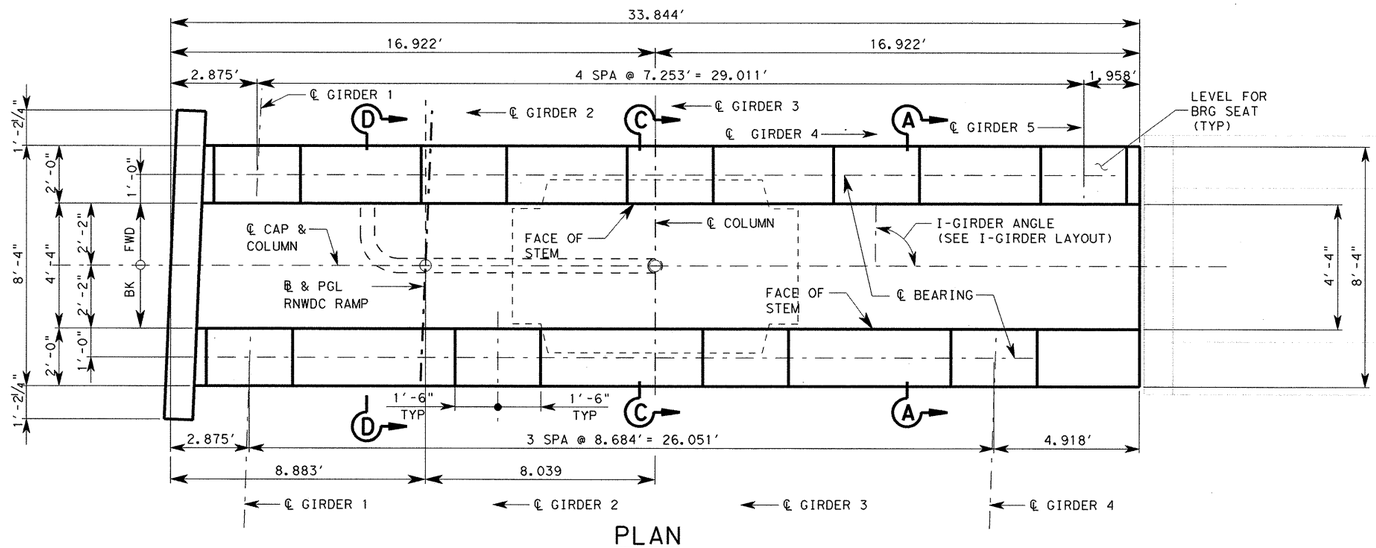

PLAN

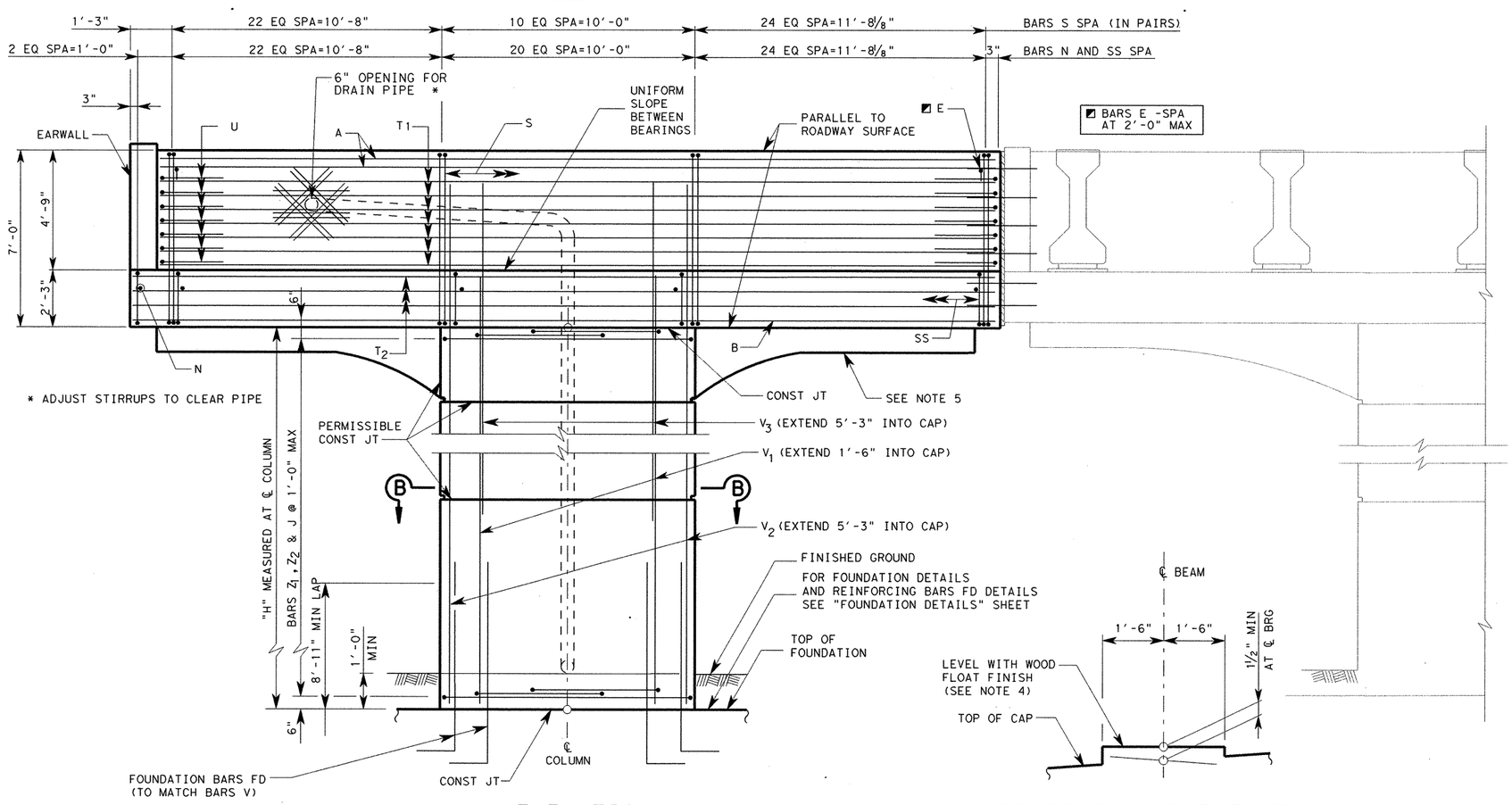

ELEVATION

BEARING SEAT ELEVATION

GENERAL NOTES:

1. DESIGNED ACCORDING TO AASHTO LRFD BRIDGE SPECIFICATIONS, 4TH EDITION 2007 AND 2009 CURRENT INTERIMS FOR HL-93 LOADING.
2. CONCRETE STRENGTH F'C=3600 PSI.
3. ALL REINFORCING SHALL BE GRADE 60.
4. BEARING SURFACE SHALL BE CLEAN AND FREE OF ALL LOOSE MATERIAL BEFORE PLACING BEARING PAD.
5. SEE "AESTHETIC TREATMENT REINFORCEMENT DETAILS" SHEET FOR AESTHETIC TREATMENT REINFORCEMENT DETAILS AND DIMENSIONS.
6. SKEW ANGLES MEASURED NORMAL TO LOCAL TANGENT IF ON CURVE.

HL-93 LOADING

STATE OF TEXAS
RAMKUMAR KOZHIKOTE
103166
LICENSED PROFESSIONAL ENGINEER

Ramkumar Kozhikote 4/11/2011

REV. No.	DATE	REVISION	BY
△			
△			
△			

PBSJ an Atkins company TBPE REG. # F-474

Texas Department of Transportation
Austin District
©2011 by TxDOT

SH 45 / O'CONNOR DRIVE RAMP NORTH-WEST DC BENT 9

SCALE: NTS SHEET 8 OF 12

DESIGNED: AUS	FED. RD DIV. No.	STATE	PROJECT No.			HIGHWAY No.	
CHECKED: RK	6	TEXAS				LP 1/SH 45	
DRAWN: JF	STATE DISTRICT	COUNTY	CONTROL No.	SECTION No.	JOB No.	SHEET No.	
CHECKED: RK	AUSTIN	WILLIAMSON	0683	06	027	433	

DATE: 4/11/2011 TIME: 10:37:22 AM
PLOT DRIVER: RD*11x17*PDF.plt
PEN TABLE: plotordr*ocon.tbl
FILE: r:\trans-design\o'connor\cadd\bdg\r-dcnw\0C45BTrnwdc08.dgn

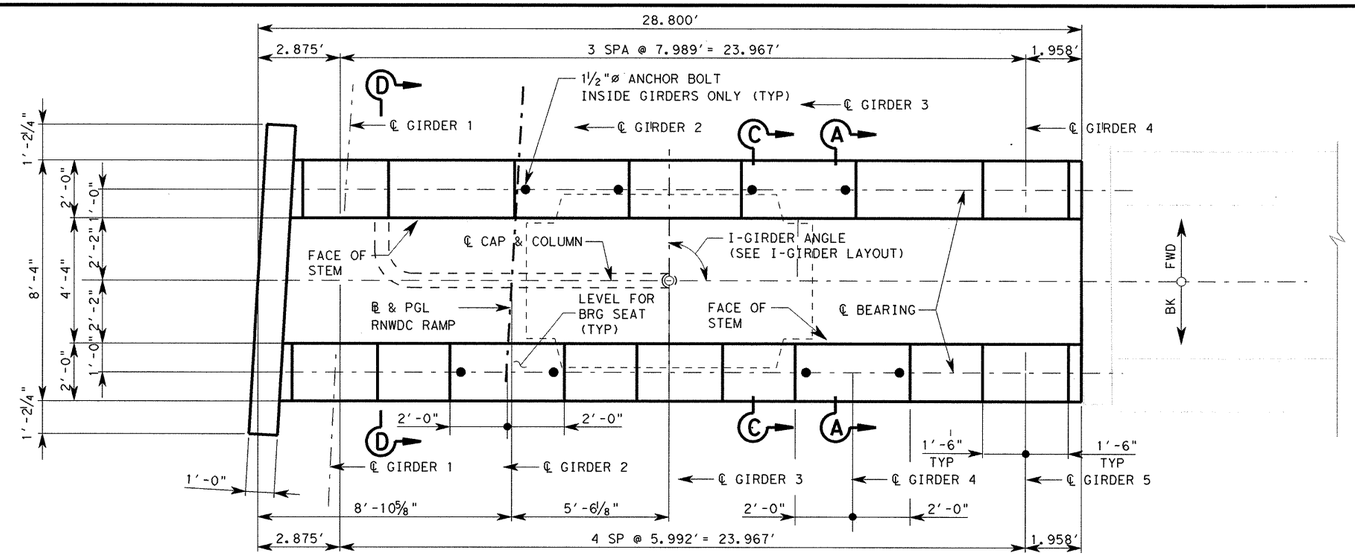

PLAN

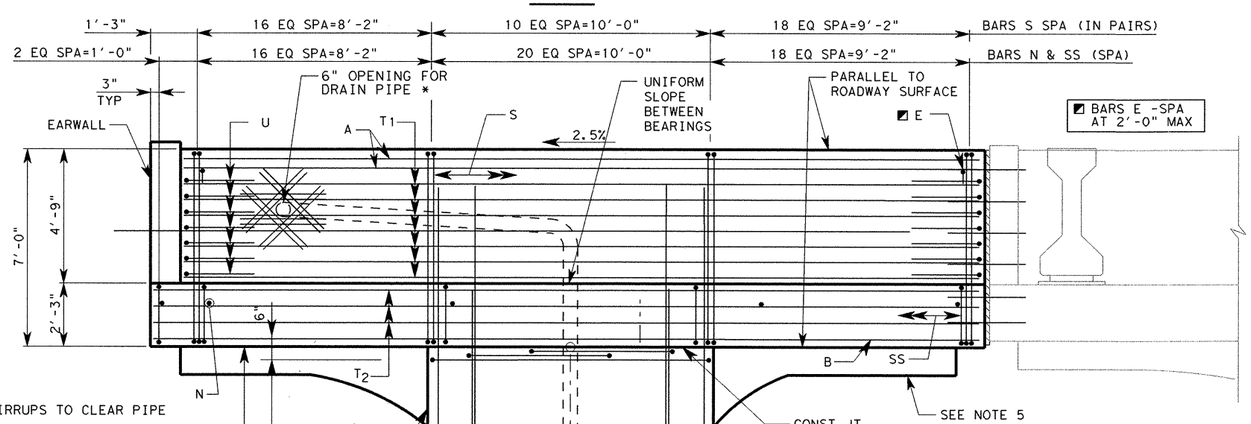

ELEVATION

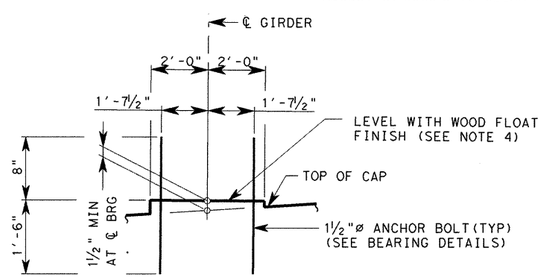

BEARING SEAT WITH ANCHOR BOLTS ELEVATION

GENERAL NOTES:

1. DESIGNED ACCORDING TO AASHTO LRFD BRIDGE SPECIFICATIONS, 4TH EDITION 2007 AND 2009 CURRENT INTERIMS FOR HL-93 LOADING.
2. CONCRETE STRENGTH F'C=3600 PSI.
3. ALL REINFORCING SHALL BE GRADE 60.
4. BEARING SURFACE SHALL BE CLEAN AND FREE OF ALL LOOSE MATERIAL BEFORE PLACING BEARING PAD.
5. SEE "AESTHETIC TREATMENT REINFORCEMENT DETAILS" SHEET FOR AESTHETIC TREATMENT REINFORCEMENT DETAILS AND DIMENSIONS.
6. SKEW ANGLES MEASURED NORMAL TO LOCAL TANGENT IF ON CURVE.
7. ANCHOR BOLTS SHALL BE ASTM F1554 GRADE 55 BOLTS WITH ASTM A 563 GRADE A HEAVY-HEX NUTS.

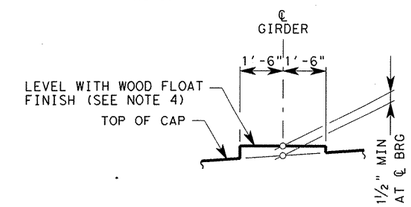

BEARING SEAT WITHOUT ANCHOR BOLTS ELEVATION

STATE OF TEXAS
RAMKUMAR KOZHIKOTE
103166
LICENSED PROFESSIONAL ENGINEER

HL-93 LOADING

Ramkumar Kozhikote 4/11/2011

REV. No.	DATE	REVISION	BY
△			
△			
△			

PBSJ an Atkins company TBPE REG. # F-474

Texas Department of Transportation Austin District

©2011 by TxDOT

SH 45 / O'CONNOR DRIVE RAMP NORTH-WEST DC BENT 10

SCALE: NTS SHEET 9 OF 12

DESIGNED: AUS	FED. RD DIV. No.	STATE	PROJECT No.		HIGHWAY No.	
CHECKED: RK	6	TEXAS			LP 1/SH 45	
DRAWN: JF	STATE DISTRICT	COUNTY	CONTROL No.	SECTION No.	JOB No.	SHEET No.
CHECKED: RK	AUSTIN	WILLIAMSON	0683	06	027	434

PLOT DRIVER: RD*11x17*PDF.plt
PEN TABLE: plotordr*ocon.tbl
FILE: r:\trans-design\o'connor\cadd\bdgr-dcnw\OC45BTrnwdc09.dgn
DATE: 4/11/2011 TIME: 10:37:24 AM

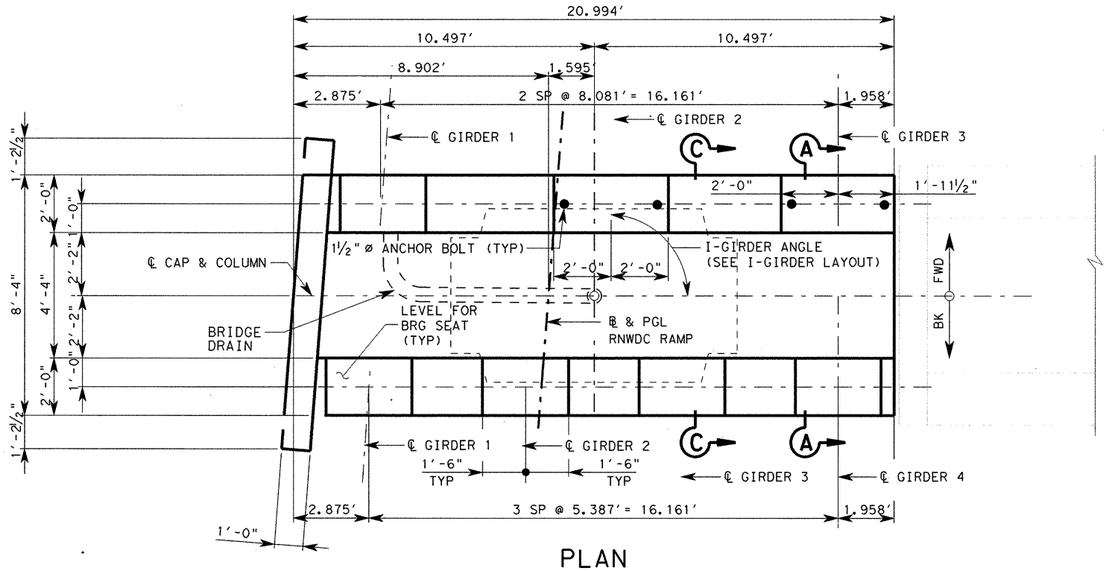

PLAN

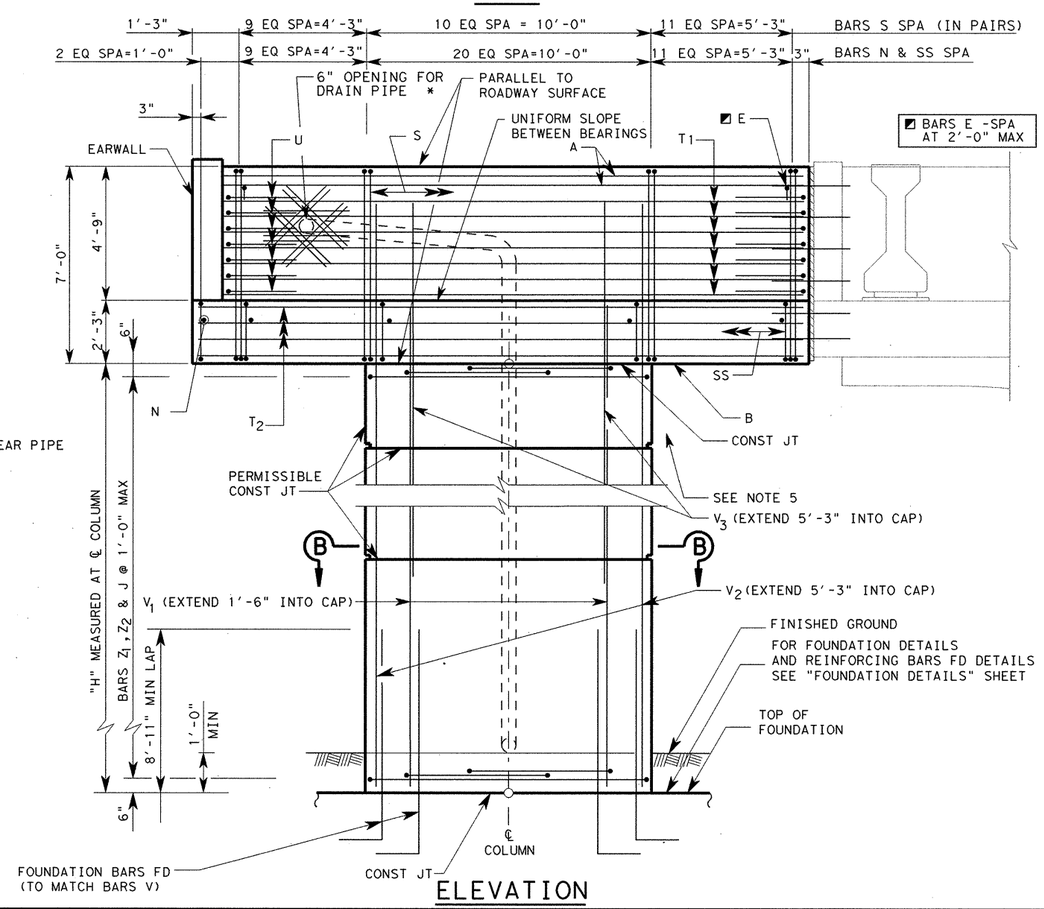

* ADJUST STIRRUPS TO CLEAR PIPE

ELEVATION

GENERAL NOTES:

1. DESIGNED ACCORDING TO AASHTO LRFD BRIDGE SPECIFICATIONS, 4TH EDITION 2007 AND 2009 CURRENT INTERIMS FOR HL-93 LOADING.
2. CONCRETE STRENGTH F'C=3600 PSI.
3. ALL REINFORCING SHALL BE GRADE 60.
4. BEARING SURFACE SHALL BE CLEAN AND FREE OF ALL LOOSE MATERIAL BEFORE PLACING BEARING PAD.
5. SEE "AESTHETIC TREATMENT REINFORCEMENT DETAILS" SHEET FOR AESTHETIC TREATMENT REINFORCEMENT DETAILS AND DIMENSIONS.
6. SKEW ANGLES MEASURED NORMAL TO LOCAL TANGENT IF ON CURVE.
7. ANCHOR BOLTS SHALL BE ASTM F1554 GRADE 55 BOLTS WITH ASTM A 563 GRADE A HEAVY-HEX NUTS.

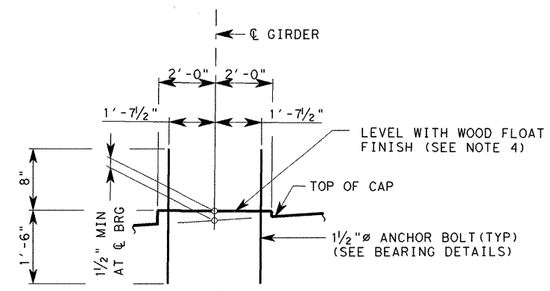

BEARING SEAT WITH ANCHOR BOLTS ELEVATION

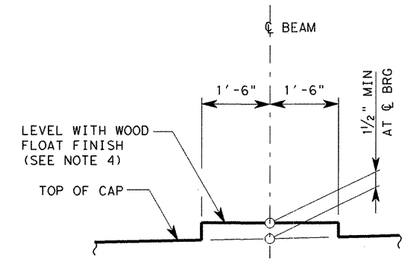

BEARING SEAT WITHOUT ANCHOR BOLTS ELEVATION

STATE OF TEXAS
RAMKUMAR KOZHIKOTE
103166
LICENSED
PROFESSIONAL ENGINEER

Ramkumar Kozhikote
4/11/2011

HL-93
LOADING

REV. No.	DATE	REVISION	BY
△			
△			
△			

PBSJ
an Atkins company
TBPE REG. # F-474

Texas Department of Transportation
Austin District
©2011 by TxDOT

SH 45 / O'CONNOR DRIVE RAMP NORTH-WEST DC BENT 11

SCALE: NTS

SHEET 10 OF 12

DESIGNED: AUS	FED. RD DIV. No.	STATE	PROJECT No.			HIGHWAY No.	
CHECKED: RK	6	TEXAS				LP 1/SH 45	
DRAWN: JF	STATE DISTRICT	COUNTY	CONTROL No.	SECTION No.	JOB No.	SHEET No.	
CHECKED: RK	AUSTIN	WILLIAMSON	0683	06	027	435	

DATE: 4/11/2011 TIME: 10:37:25 AM
PLOT DRIVER: RD*11x17*PDF.plt
PEN TABLE: plotordr*ocon.tbl
FILE: r:\trans-design\o'connor\oddj\bdg\r-dcnw\0C45BTr-nwdc10.dgn

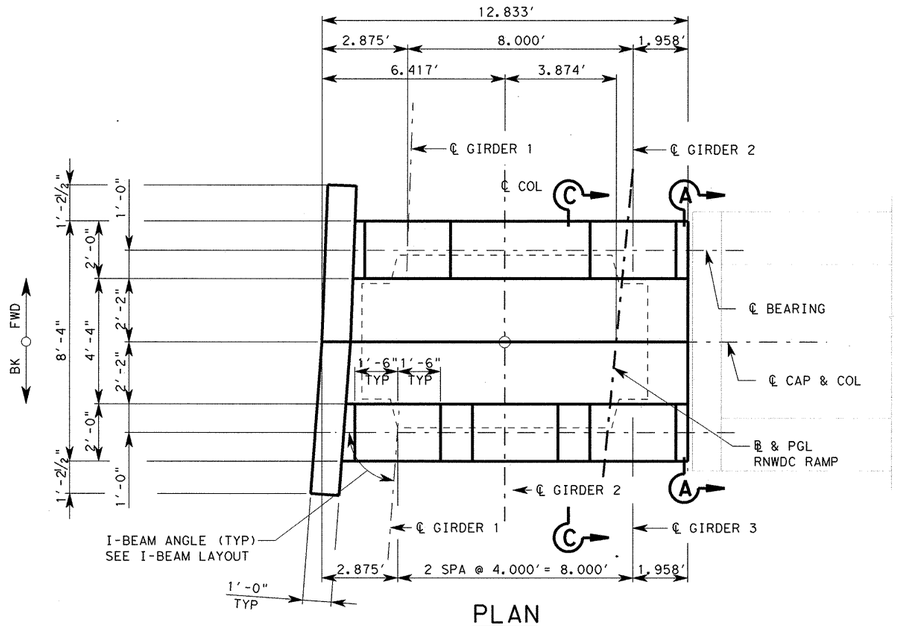

PLAN

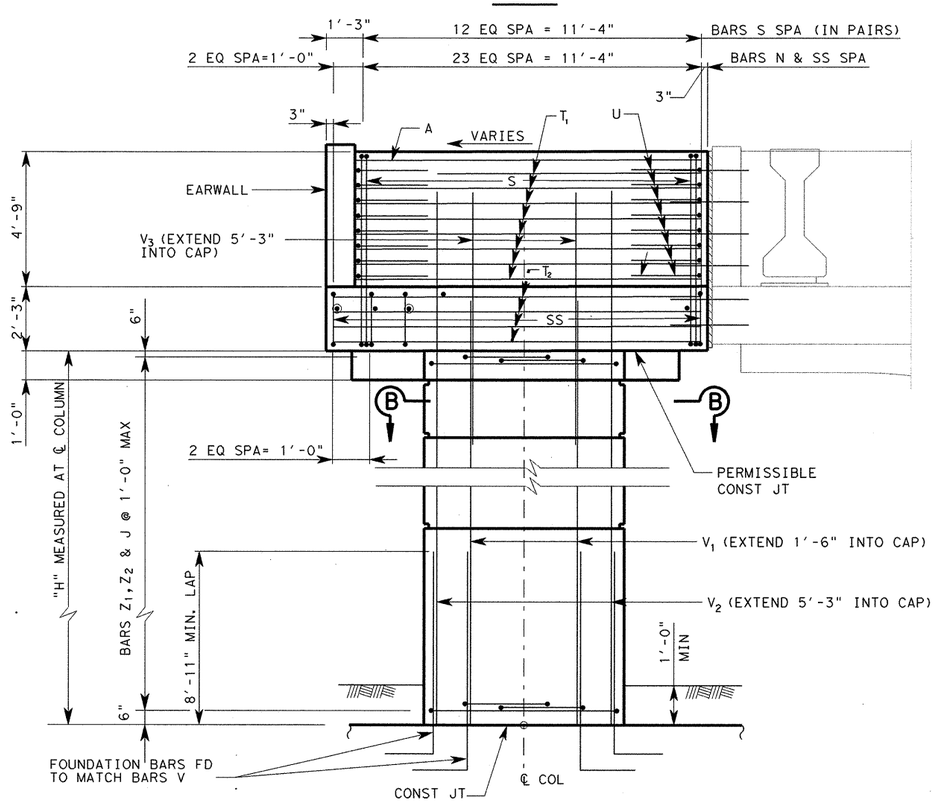

ELEVATION

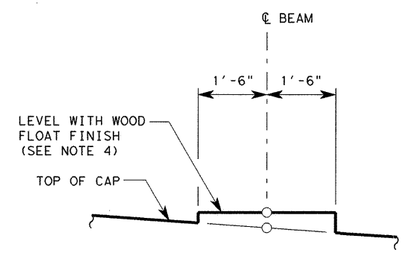

BEARING SEAT ELEVATION

GENERAL NOTES:

1. DESIGNED ACCORDING TO AASHTO LRFD BRIDGE SPECIFICATIONS, 4TH EDITION 2007 AND 2009 CURRENT INTERIMS FOR HL-93 LOADING.
2. CONCRETE STRENGTH F'C=3600 PSI.
3. ALL REINFORCING SHALL BE GRADE 60.
4. BEARING SURFACE SHALL BE CLEAN AND FREE OF ALL LOOSE MATERIAL BEFORE PLACING BEARING PAD.
5. SEE "AESTHETIC TREATMENT REINFORCEMENT DETAILS" SHEET FOR AESTHETIC TREATMENT REINFORCEMENT DETAILS AND DIMENSIONS.
6. SKEW ANGLES MEASURED NORMAL TO LOCAL TANGENT IF ON CURVE.

STATE OF TEXAS
RAMKUMAR KOZHIKOTE
103166
LICENSED PROFESSIONAL ENGINEER

HL-93 LOADING

Ramkumar Kozhikote 4/11/2011

REV. No.	DATE	REVISION	BY
△			
△			
△			

PBSJ an Atkins company TBPE REG. # F-474

Texas Department of Transportation
Austin District

©2011 by TxDOT

SH 45 / O'CONNOR DRIVE RAMP NORTH-WEST DC BENT 12

SCALE: NTS SHEET 11 OF 12

DESIGNED: AUS	FED. RD DIV. No.	STATE	PROJECT No.			HIGHWAY No.	
CHECKED: RK	6	TEXAS				LP 1/SH 45	
DRAWN: JF	STATE DISTRICT	COUNTY	CONTROL No.	SECTION No.	JOB No.	SHEET No.	
CHECKED: RK	AUSTIN	WILLIAMSON	0683	06	027	436	

PLOT DRIVER: RD*11x17*PDF.plt
PEN TABLE: plotordr*ocon.tbl
FILE: r:\trans-design\o'connor\odd\bdg\r-donw\OC45BTrnwdc11.dgn
DATE: 4/11/2011 TIME: 10:37:27 AM

DATE: 4/11/2011 TIME: 10:37:28 AM

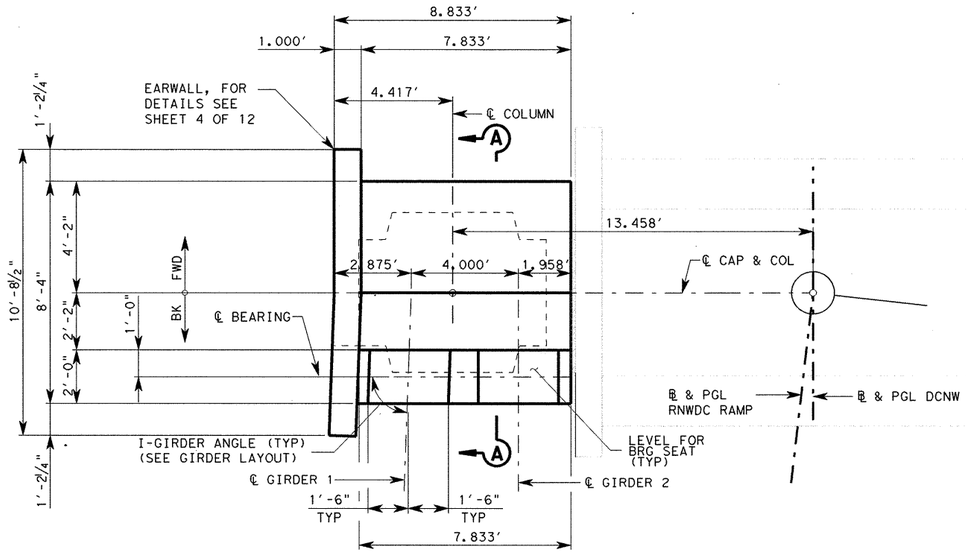

PLAN

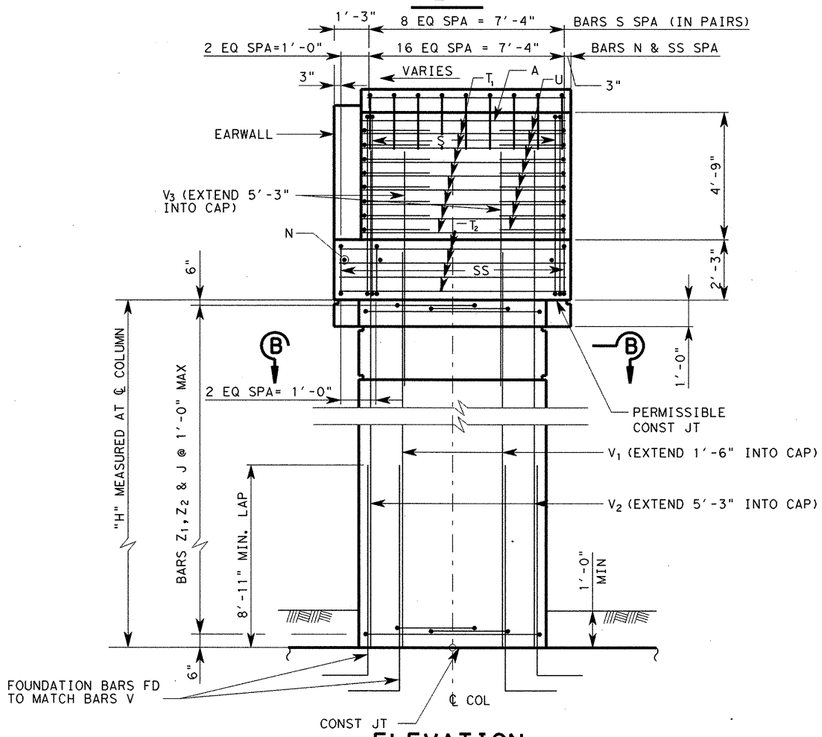

ELEVATION

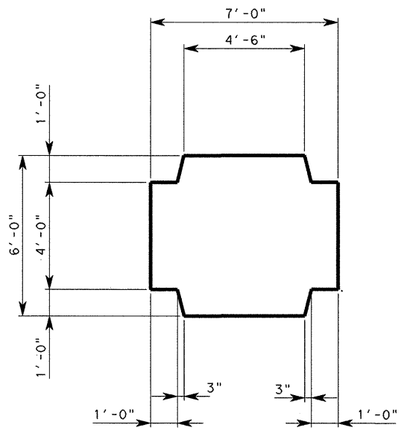

SECTION B-B

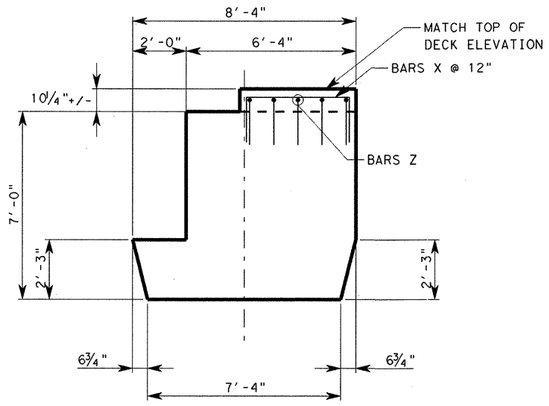

SECTION A-A

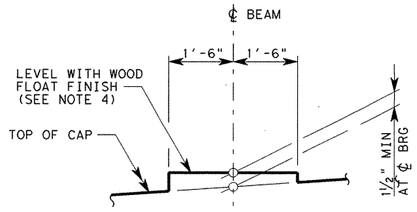

BEARING SEAT ELEVATION

GENERAL NOTES:

1. DESIGNED ACCORDING TO AASHTO LRFD BRIDGE SPECIFICATIONS, 4TH EDITION 2007 AND 2009 CURRENT INTERIMS FOR HL-93 LOADING.
2. CONCRETE STRENGTH F'C=3600 PSI.
3. ALL REINFORCING SHALL BE GRADE 60.
4. BEARING SURFACE SHALL BE CLEAN AND FREE OF ALL LOOSE MATERIAL BEFORE PLACING BEARING PAD.
5. SEE "AESTHETIC TREATMENT REINFORCEMENT DETAILS" SHEET FOR AESTHETIC TREATMENT REINFORCEMENT DETAILS AND DIMENSIONS.
6. SKEW ANGLES MEASURED NORMAL TO LOCAL TANGENT IF ON CURVE.

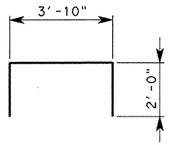

BARS X

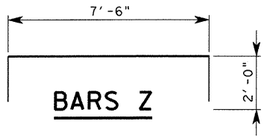

BARS Z

STATE OF TEXAS
RAMKUMAR KOZHIKOTE
103166
LICENSED
PROFESSIONAL ENGINEER

HL-93 LOADING

Ramkumar Kozhikote 4/11/2011

REV. No.	DATE	REVISION	BY
△			
△			
△			

PBSJ
an Atkins company TBPE REG. # F-474

Texas Department of Transportation
Austin District
©2011 by TxDOT

SH 45 / O'CONNOR DRIVE
RAMP NORTH-WEST DC
BENT 13

SCALE: NTS SHEET 12 OF 12

DESIGNED: AUS	FED. RD DIV. No.	STATE	PROJECT No.			HIGHWAY No.	
CHECKED: RK	6	TEXAS				LP 1/SH 45	
DRAWN: JF	STATE DISTRICT	COUNTY		CONTROL No.	SECTION No.	JOB No.	SHEET No.
CHECKED: RK	AUSTIN	WILLIAMSON		0683	06	027	437

PLOT DRIVER: RD*11x17*PDF.plt
PEN TABLE: plotdrv*ocon.tbl
FILE: r:\trans-design\o'connor\cadd\bdgyr-donw\0C45BTrnwdc12.dgn

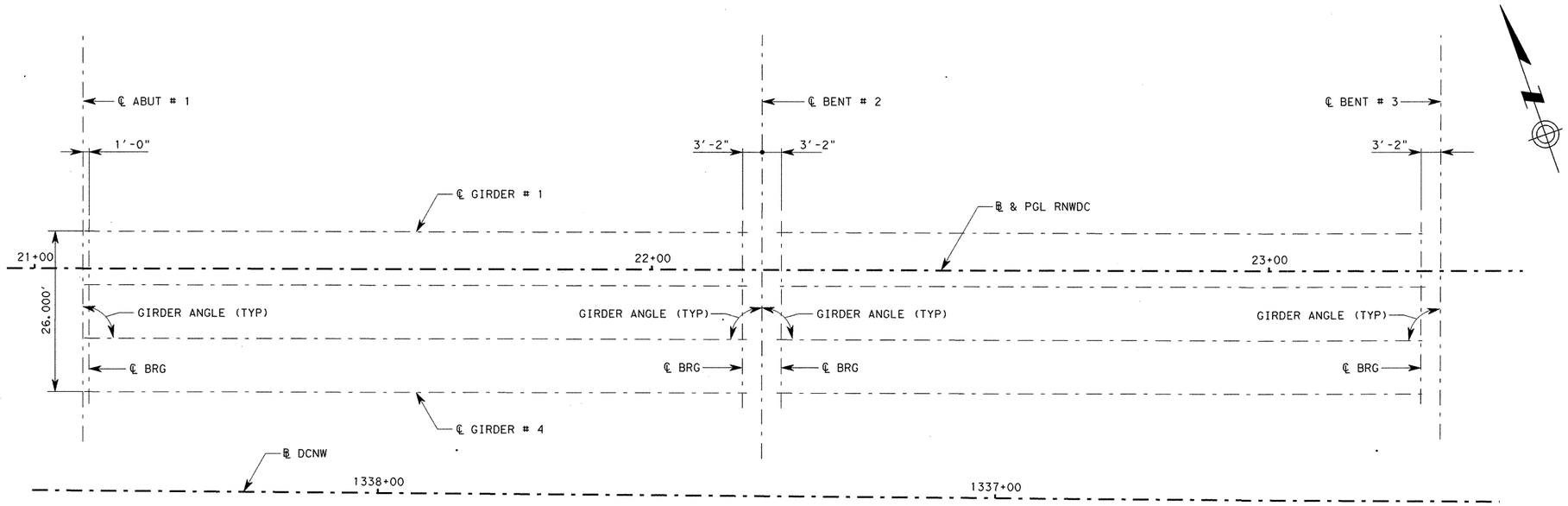

SPAN # 1
(TY Tx54 GIRDERS)

SPAN # 2
(TY Tx54 GIRDERS)

BENT REPORT

BENT REPORT

Abut 1 N 19° 22' 20.66" E

Distance between Station Line and Girder 1 6.000 L

		Girder Spancing (C.L. Bent	Girder Angle D	M	S
Span 1	Girder 1	0.000	90°	00'	00
	Girder 2	8.667	90°	00'	00
	Girder 3	8.667	90°	00'	00
	Girder 4	8.667	90°	00'	00
	Total	26.000			

Bent 2 N 19° 22' 20.66" E

Distance between Station Line and Girder 1 6.000 L

		Girder Spancing (C.L. Bent	Girder Angle D	M	S
Span 1	Girder 1	0.000	90°	00'	00
	Girder 2	8.667	90°	00'	00
	Girder 3	8.667	90°	00'	00
	Girder 4	8.667	90°	00'	00
	Total	26.000			
Span 2	Girder 1	0.000	90°	00'	00
	Girder 2	8.667	90°	00'	00
	Girder 3	8.667	90°	00'	00
	Girder 4	8.667	90°	00'	00
	Total	26.000			

Bent 3 N 19° 22' 20.66" E

Distance between Station Line and Girder 1 6.000 L

		Girder Spancing (C.L. Bent	Girder Angle D	M	S
Span 2	Girder 1	0.000	90°	00'	00
	Girder 2	8.667	90°	00'	00
	Girder 3	8.667	90°	00'	00
	Girder 4	8.667	90°	00'	00
	Total	26.000			

GIRDER REPORT

Girder Reprt Span 1

	Horizontal Distance C-C Bent	C-C Bearing	True Distance Bot. BM. FLG	Girder Slope
Girder 1	110.000	105.833	107.428	0.043
Girder 2	110.000	105.833	107.428	0.043
Girder 3	110.000	105.833	107.428	0.043
Girder 4	110.000	105.833	107.428	0.043

Girder Reprt Span 2

	Horizontal Distance C-C Bent	C-C Bearing	True Distance Bot. BM. FLG	Girder Slope
Girder 1	110.000	103.666	105.308	0.053
Girder 2	110.000	103.666	105.308	0.053
Girder 3	110.000	103.666	105.308	0.053
Girder 4	110.000	103.666	105.308	0.053

STATE OF TEXAS
RAMKUMAR KOZHIKOTE
103166
LICENSED
PROFESSIONAL ENGINEER

Ramkumar Kozhikote
4/11/2011

HL-93 LOADING

REV. No.	DATE	REVISION	BY
△			
△			
△			

PBSJ
an Atkins company TBPE REG. # F-474

Texas Department of Transportation
Austin District
©2011 by TxDOT

SH 45 / O'CONNOR DRIVE RAMP NORTH-WEST DC I-GIRDER LAYOUT (SPANS 1-2)

SCALE: 1"=20' SHEET 1 OF 7

DESIGNED: AUS	FED. RD DIV. No.	STATE	PROJECT No.			HIGHWAY No.	
CHECKED: RK	6	TEXAS				LP 1/SH 45	
DRAWN: JF	STATE DISTRICT	COUNTY	CONTROL No.	SECTION No.	JOB No.	SHEET No.	
CHECKED: RK	AUSTIN	WILLIAMSON	0683	06	027	438	

DATE: 4/11/2011 TIME: 10:37:29 AM
PLOT DRIVER: RD*11x17*PDF.plt
PEN TABLE: plotordr*ocon.tbl
FILE: r:\trans-design\o'connor\cadd\bdgyr-dcnw\0C450Lrnwdc01.dgn

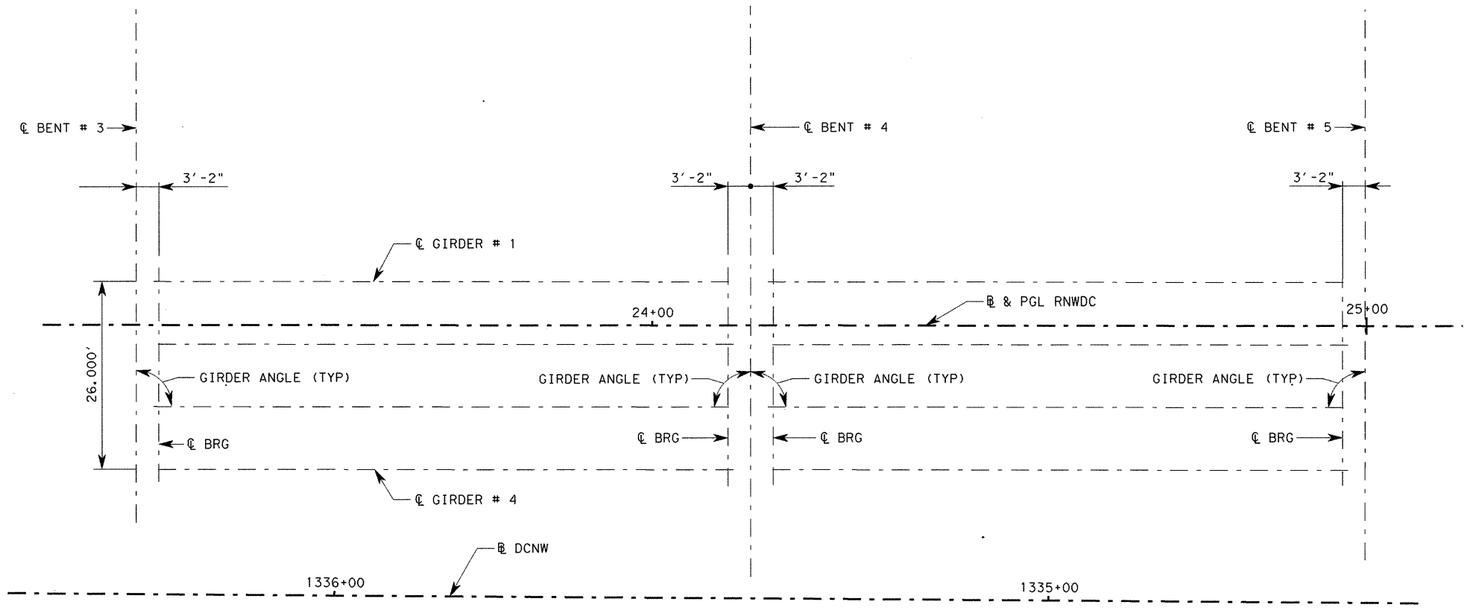

SPAN # 3
(TY Tx54 GIRDERS)

SPAN # 4
(TY Tx54 GIRDERS)

BENT REPORT

BENT REPORT

Bent 3 N 19° 22' 20.66" E

Distance between Station Line and Girder 1 6.000 L

		Girder Spancing (C.L. Bent	Girder Angle D	M	S
Span 3	Girder 1	0.000	90°	00'	00
	Girder 2	8.667	90°	00'	00
	Girder 3	8.667	90°	00'	00
	Girder 4	8.667	90°	00'	00
	Total	26.000			

Bent 4 N 19° 22' 20.66" E

Distance between Station Line and Girder 1 6.000 L

		Girder Spancing (C.L. Bent	Girder Angle D	M	S
Span 3	Girder 1	0.000	90°	00'	00
	Girder 2	8.667	90°	00'	00
	Girder 3	8.667	90°	00'	00
	Girder 4	8.667	90°	00'	00
	Total	26.000			
Span 4	Girder 1	0.000	90°	00'	00
	Girder 2	8.667	90°	00'	00
	Girder 3	8.667	90°	00'	00
	Girder 4	8.667	90°	00'	00
	Total	26.000			

Bent 5 N 19° 22' 20.66" E

Distance between Station Line and Girder 1 6.000 L

		Girder Spancing (C.L. Bent	Girder Angle D	M	S
Span 4	Girder 1	0.000	90°	00'	00
	Girder 2	8.667	90°	00'	00
	Girder 3	8.667	90°	00'	00
	Girder 4	8.667	90°	00'	00
	Total	26.000			

GIRDER REPORT

Girder Reprt Span 3

	Horizontal Distance C-C Bent	C-C Bearing	True Distance Bot. BM. FLG	Girder Slope
Girder 1	86.000	79.666	81.280	0.054
Girder 2	86.000	79.666	81.280	0.054
Girder 3	86.000	79.666	81.280	0.054
Girder 4	86.000	79.666	81.280	0.054

Girder Reprt Span 4

	Horizontal Distance C-C Bent	C-C Bearing	True Distance Bot. BM. FLG	Girder Slope
Girder 1	86.000	79.666	81.280	0.054
Girder 2	86.000	79.666	81.280	0.054
Girder 3	86.000	79.666	81.280	0.054
Girder 4	86.000	79.666	81.280	0.054

HL-93 LOADING

STATE OF TEXAS
RAMKUMAR KOZHIKOTE
103166
LICENSED
PROFESSIONAL ENGINEER

Ramkumar Kozhikote
4/11/2011

REV. No.	DATE	REVISION	BY
△			
△			
△			

PBSJ
an Atkins company
TBPE REG. # F-474

Texas Department of Transportation
Austin District
©2011 by TxDOT

SH 45 / O'CONNOR DRIVE RAMP NORTH-WEST DC I-GIRDER LAYOUT (SPANS 3-4)

SCALE: 1"=20' SHEET 2 OF 7

DESIGNED: AUS	FED. RD DIV. No.	STATE	PROJECT No.			HIGHWAY No.	
CHECKED: RK	6	TEXAS				LP 1/SH 45	
DRAWN: JF	STATE DISTRICT	COUNTY		CONTROL No.	SECTION No.	JOB No.	SHEET No.
CHECKED: RK	AUSTIN	WILLIAMSON		0683	06	027	439

DATE: 4/11/2011 TIME: 10:37:31 AM
PLOT DRIVER: RD*11x17*PDF.plt
PEN TABLE: plotordr*ooon.tbl
FILE: r:\trans-design\o'connor\cadd\bdgYr-dcnw\0C45GLrnwdc02.dgn

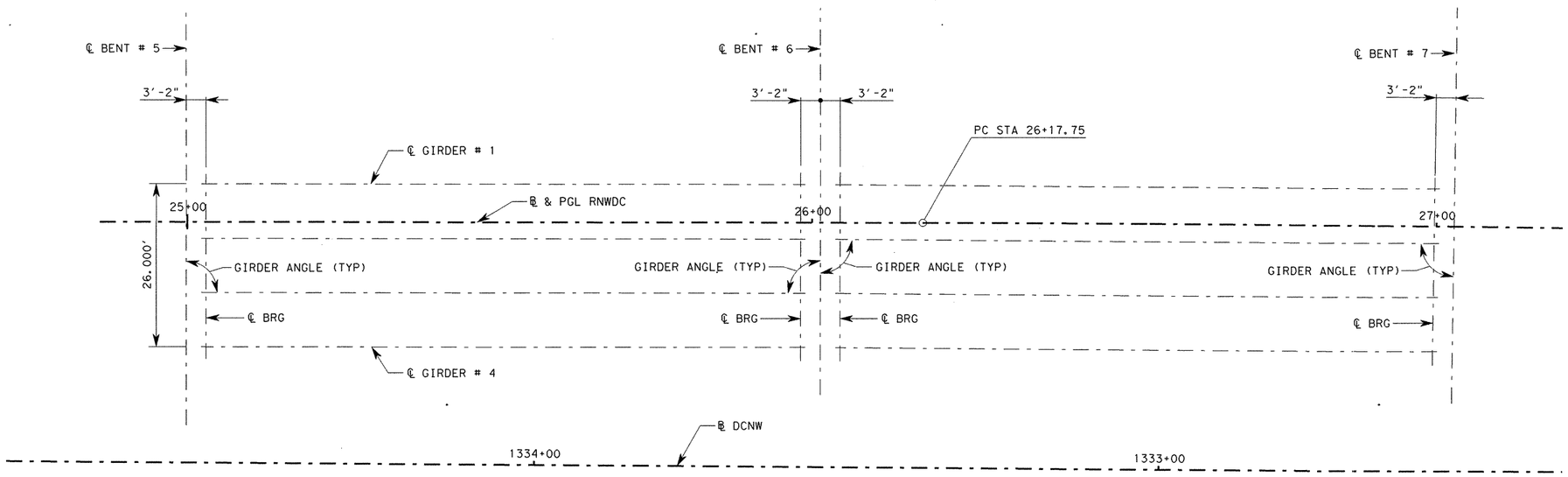

SPAN # 5
(TY Tx54 GIRDERS)

SPAN # 6
(TY Tx54 GIRDERS)

BENT REPORT

BENT REPORT

Bent 5 N 19° 22' 20.66" E

Distance between Station Line and Girder 1 6.000 L

		Girder Spancing (C.L. Bent	Girder Angle D	M	S
Span 5	Girder 1	0.000	90°	00'	00
	Girder 2	8.667	90°	00'	00
	Girder 3	8.667	90°	00'	00
	Girder 4	8.667	90°	00'	00
	Total	26.000			

Bent 6 N 19° 22' 20.66" E

Distance between Station Line and Girder 1 6.000 L

		Girder Spancing (C.L. Bent	Girder Angle D	M	S
Span 5	Girder 1	0.000	90°	00'	00
	Girder 2	8.667	90°	00'	00
	Girder 3	8.667	90°	00'	00
	Girder 4	8.667	90°	00'	00
	Total	26.000			
Span 6	Girder 1	0.000	89°	39'	40
	Girder 2	8.667	89°	39'	40
	Girder 3	8.667	89°	39'	41
	Girder 4	8.667	89°	39'	41
	Total	26.000			

Bent 7 N 20° 10' 51.02" E

Distance between Station Line and Girder 1 6.000 L

		Girder Spancing (C.L. Bent	Girder Angle D	M	S
Span 6	Girder 1	0.000	89°	31'	50
	Girder 2	8.667	89°	31'	50
	Girder 3	8.667	89°	31'	49
	Girder 4	8.667	89°	31'	49
	Total	26.000			

GIRDER REPORT

Girder Reprt Span 5

	Horizontal Distance C-C Bent	C-C Bearing	True Distance Bot. BM. FLG	Girder Slope
Girder 1	101.500	95.166	96.802	0.054
Girder 2	101.500	95.166	96.802	0.054
Girder 3	101.500	95.166	96.802	0.054
Girder 4	101.500	95.166	96.802	0.054

Girder Reprt Span 6

	Horizontal Distance C-C Bent	C-C Bearing	True Distance Bot. BM. FLG	Girder Slope
Girder 1	101.584	95.249	96.886	0.054
Girder 2	101.461	95.127	96.764	0.054
Girder 3	101.339	95.005	96.642	0.054
Girder 4	101.217	94.883	96.520	0.054

STATE OF TEXAS
RAMKUMAR KOZHIKOTE
103166
LICENSED
PROFESSIONAL ENGINEER

Ramkumar Kozhikote
4/11/2011

HL-93 LOADING

REV. No.	DATE	REVISION	BY
△			
△			
△			

PBSJ
an Atkins company TBPE REG. # F-474

Texas Department of Transportation
Austin District
©2011 by TxDOT

SH 45 / O'CONNOR DRIVE RAMP NORTH-WEST DC I-GIRDER LAYOUT (SPANS 5-6)

SCALE: 1"=20' SHEET 3 OF 7

DESIGNED: AUS	FED. RD DIV. No.	STATE	PROJECT No.			HIGHWAY No.
CHECKED: RK	6	TEXAS				LP 1/SH 45
DRAWN: JF	STATE DISTRICT	COUNTY	CONTROL No.	SECTION No.	JOB No.	SHEET No.
CHECKED: RK	AUSTIN	WILLIAMSON	0683	06	027	440

DATE: 4/11/2011 TIME: 10:37:32 AM
PLOT DRIVER: RD*11x17*PDF.plt
PEN TABLE: plotordr*econ.tbl
FILE: r:\trans-design\o'connor\oadd\bdg\r-donw\0C45GLrnwdc03.dgn

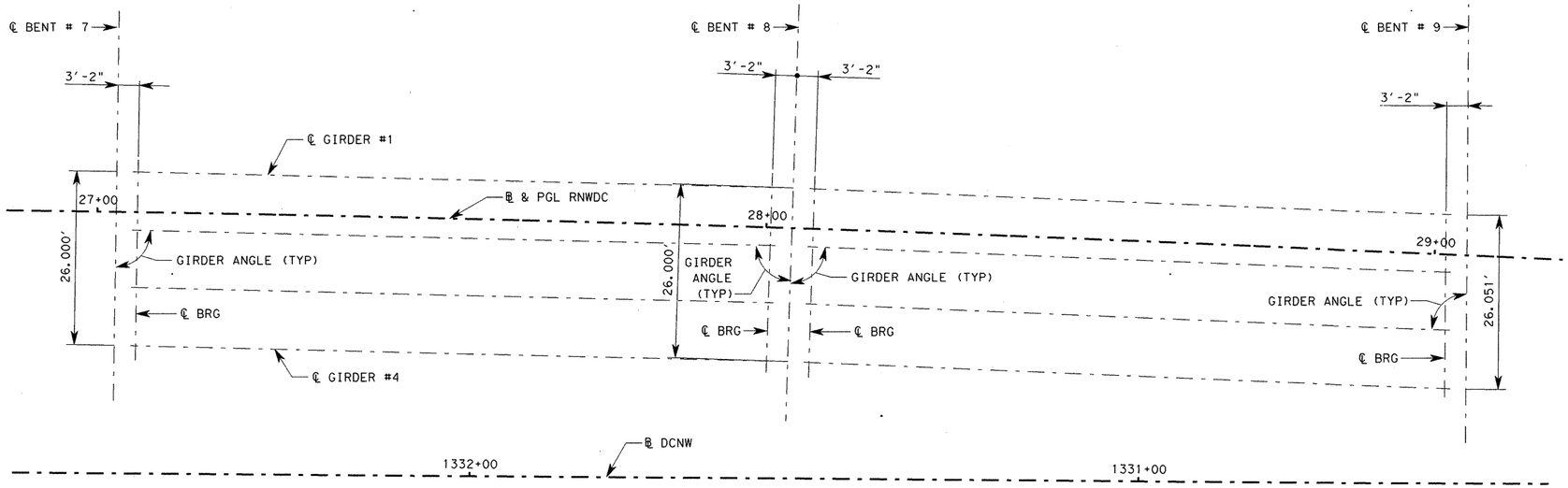

SPAN # 7
(TY Tx54 GIRDERS)

SPAN # 8
(TY Tx54 GIRDERS)

BENT REPORT

BENT REPORT

Bent 7 N 20° 10' 51.02" E

Distance between Station Line and Girder 1 6.000 L

		Girder Spancing (C.L. Bent	Girder Angle D	M	S
Span 7	Girder 1	0.000	89°	31'	13
	Girder 2	8.667	89°	31'	13
	Girder 3	8.667	89°	31'	13
	Girder 4	8.667	89°	31'	13
	Total	26.000			

Bent 8 N 21° 08' 25.87" E

Distance between Station Line and Girder 1 6.000 L

		Girder Spancing (C.L. Bent	Girder Angle D	M	S
Span 7	Girder 1	0.000	89°	31'	13
	Girder 2	8.667	89°	31'	13
	Girder 3	8.667	89°	31'	13
	Girder 4	8.667	89°	31'	13
	Total	26.000			
Span 8	Girder 1	0.000	89°	31'	33
	Girder 2	8.667	89°	31'	08
	Girder 3	8.667	89°	30'	43
	Girder 4	8.667	89°	30'	18
	Total	26.000			

Bent 9 N 19° 43' 12.00" E

Distance between Station Line and Girder 1 6.000 L

		Girder Spancing (C.L. Bent	Girder Angle D	M	S
Span 8	Girder 1	0.000	88°	06'	20
	Girder 2	8.684	88°	05'	55
	Girder 3	8.684	88°	05'	29
	Girder 4	8.684	88°	05'	04
	Total	26.052			

GIRDER REPORT

Girder Reprt Span 7

	Horizontal Distance C-C Bent	C-C Bearing	True Distance Bot. BM. FLG	Girder Slope
Girder 1	101.099	94.765	96.266	-0.004
Girder 2	100.954	94.620	96.121	-0.004
Girder 3	100.809	94.475	95.975	-0.004
Girder 4	100.664	94.330	95.830	-0.004

Girder Reprt Span 8

	Horizontal Distance C-C Bent	C-C Bearing	True Distance Bot. BM. FLG	Girder Slope
Girder 1	100.850	94.514	96.099	0.043
Girder 2	101.065	94.729	96.315	0.043
Girder 3	101.280	94.945	96.531	0.043
Girder 4	101.496	95.160	96.746	0.043

STATE OF TEXAS
RAMKUMAR KOZHIKOTE
103166
LICENSED
PROFESSIONAL ENGINEER

Ramkumar Kozhikote 4/11/2011

HL-93 LOADING

REV. No.	DATE	REVISION	BY
△			
△			
△			

PBSJ
an Atkins company TBPE REG. # F-474

Texas Department of Transportation
Austin District
©2011 by TxDOT

SH 45 / O'CONNOR DRIVE RAMP NORTH-WEST DC I-GIRDER LAYOUT (SPANS 7-8)

SCALE: 1"=20' SHEET 4 OF 7

DESIGNED: AUS	FED. RD DIV. No.	STATE	PROJECT No.			HIGHWAY No.	
CHECKED: RK	6	TEXAS				LP 1/SH 45	
DRAWN: JF	STATE DISTRICT	COUNTY	CONTROL No.	SECTION No.	JOB No.	SHEET No.	
CHECKED: RK	AUSTIN	WILLIAMSON	0683	06	027	441	

DATE: 4/11/2011 TIME: 10:37:34 AM
PLOT DRIVER: RD*11x17*PDF.plt
PEN TABLE: plotordr*ocon.tbl
FILE: r:\trans-design\o'connor\cadd\bdg\r-dcnw\OC45GLrnwdc04.dgn

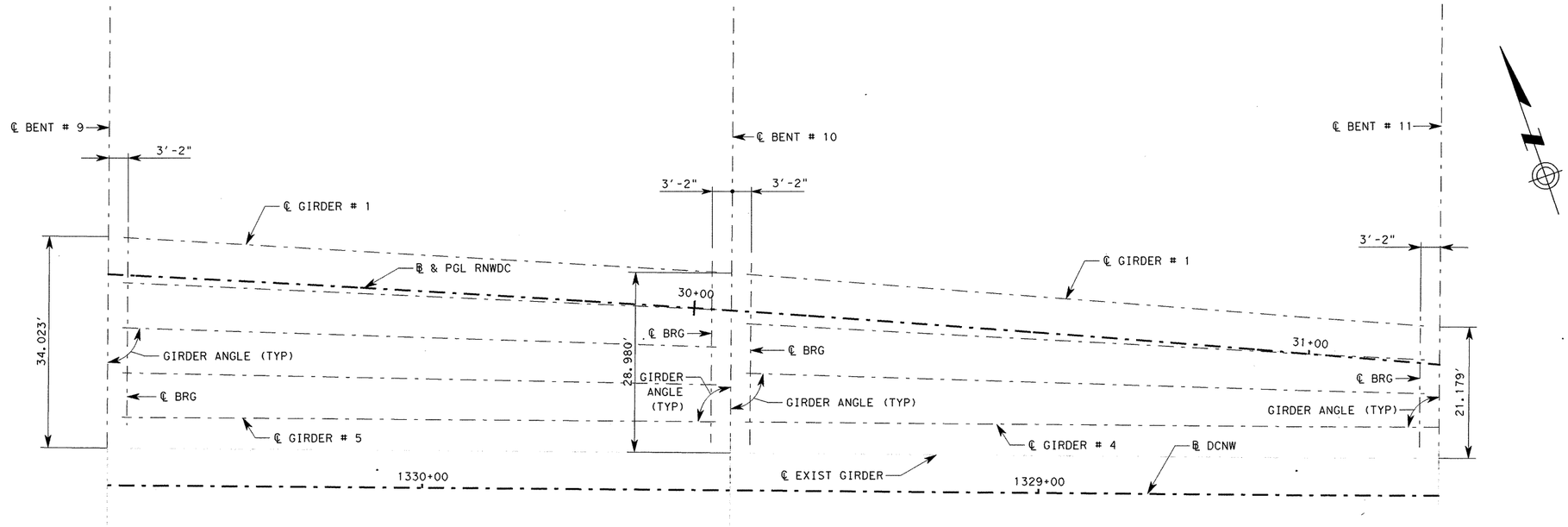

SPAN # 9
(TY Tx54 GIRDERS)

SPAN # 10
(TY Tx54 GIRDERS)

BENT REPORT

BENT REPORT

Bent 9 N 19° 43' 12.00" E

Distance between Station Line and Girder 1 6.000 L

		Girder Spancing (C.L. Bent	Girder Angle D	M	S
Span 9	Girder 1	0.000	87°	08'	45
	Girder 2	7.253	87°	51'	31
	Girder 3	7.253	88°	34'	20
	Girder 4	7.253	89°	17'	10
	Girder 5	7.253	90°	00'	00
	Total	29.012			

Bent 10 N 19° 43' 12.00" E

Distance between Station Line and Girder 1 6.000 L

		Girder Spancing (C.L. Bent	Girder Angle D	M	S
Span 9	Girder 1	0.000	87°	08'	45
	Girder 2	5.992	87°	51'	31
	Girder 3	5.992	88°	34'	20
	Girder 4	5.992	89°	17'	09
	Girder 5	5.992	90°	00'	00
	Total	23.968			
Span 10	Girder 1	0.000	86°	07'	14
	Girder 2	7.989	87°	24'	41
	Girder 3	7.989	88°	42'	18
	Girder 4	7.989	90°	00'	00
	Total	23.967			

Bent 11 N 19° 43' 12.00" E

Distance between Station Line and Girder 1 6.000 L

		Girder Spancing (C.L. Bent	Girder Angle D	M	S
Span 10	Girder 1	0.000	86°	07'	14
	Girder 2	5.387	87°	24'	42
	Girder 3	5.387	88°	42'	18
	Girder 4	5.387	90°	00'	00
	Total	16.161			

GIRDER REPORT

Girder Reprt Span 9

	Horizontal Distance C-C Bent	C-C Bearing	True Distance Bot. BM. FLG	Girder Slope
Girder 1	101.198	94.856	96.417	0.036
Girder 2	101.143	94.805	96.363	0.035
Girder 3	101.104	94.768	96.325	0.035
Girder 4	101.081	94.746	96.301	0.034
Girder 5	101.073	94.739	96.292	0.034

Girder Reprt Span 10

	Horizontal Distance C-C Bent	C-C Bearing	True Distance Bot. BM. FLG	Girder Slope
Girder 1	115.257	108.908	110.481	0.036
Girder 2	115.110	108.770	110.339	0.035
Girder 3	115.022	108.687	110.252	0.035
Girder 4	114.993	108.659	110.222	0.034

STATE OF TEXAS
RAMKUMAR KOZHIKOTE
103166
LICENSED
PROFESSIONAL ENGINEER

HL-93 LOADING

Ramkumar Kozhikote 4/11/2011

REV. No.	DATE	REVISION	BY
△			
△			
△			

PBSJ
an Atkins company TBPE REG. # F-474

Texas Department of Transportation
Austin District
©2011 by TxDOT

SH 45 / O'CONNOR DRIVE RAMP NORTH-WEST DC I-GIRDER LAYOUT (SPANS 9-10)

SCALE: 1"=20' SHEET 5 OF 7

DESIGNED: AUS	FED. RD DIV. No.	STATE	PROJECT No.			HIGHWAY No.	
CHECKED: RK	6	TEXAS				LP 1/SH 45	
DRAWN: JF	STATE DISTRICT	COUNTY	CONTROL No.	SECTION No.	JOB No.	SHEET No.	
CHECKED: RK	AUSTIN	WILLIAMSON	0683	06	027	442	

DATE: 4/11/2011 TIME: 10:37:36 AM
PLOT DRIVER: RD*11x17*PDF.plt
PEN TABLE: plotordr*ocon.tbl
FILE: r:\trans-design\o'connor\cadd\bdg\r-donw\0C450LrnwdC05.dgn

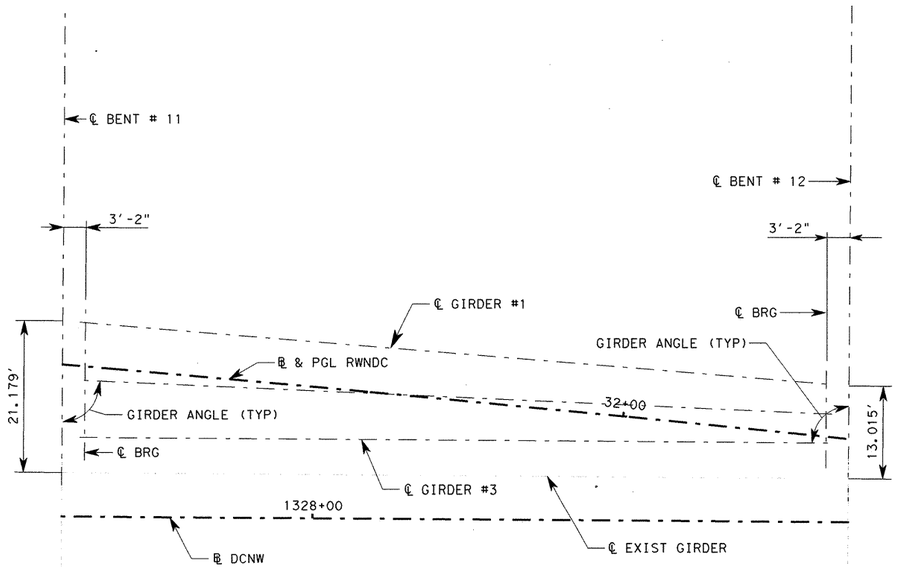

SPAN # 11

(TY Tx54 GIRDERS)

BENT REPORT

BENT REPORT

Bent 11 N 19° 43' 12.00" E

Distance between Station Line and Girder 1 6.000 L

		Girder Spancing (C.L. Bent	Girder Angle D	M	S
Span 11	Girder 1	0.000	85°	44'	49
	Girder 2	8.081	87°	52'	14
	Girder 3	8.081	90°	00'	00
	Total	16.162			

Bent 12 N 19° 43' 12.00" E

Distance between Station Line and Girder 1 6.000 L

		Girder Spancing (C.L. Bent	Girder Angle D	M	S
Span 11	Girder 1	0.000	85°	44'	50
	Girder 2	4.000	87°	52'	15
	Girder 3	4.000	90°	00'	00
	Total	8.000			

GIRDER REPORT

Girder Reprt Span 11

	Horizontal Distance C-C Bent	C-C Bearing	True Distance Bot. BM. FLG	Girder Slope
Girder 1	110.309	103.957	105.526	0.036
Girder 2	110.081	103.742	105.305	0.035
Girder 3	110.005	103.671	105.229	0.034

HL-93 LOADING

STATE OF TEXAS
RAMKUMAR KOZHIKOTE
103166
LICENSED
PROFESSIONAL ENGINEER

Ramkumar Kozhikote 4/11/2011

REV. No.	DATE	REVISION	BY
△			
△			
△			

PBSJ
an Atkins company TBPE REG. # F-474

Texas Department of Transportation
Austin District
©2011 by TxDOT

SH 45 / O'CONNOR DRIVE RAMP NORTH-WEST DC I-GIRDER LAYOUT (SPAN 11)

SCALE: 1"=20' SHEET 6 OF 7

DESIGNED: AUS	FED. RD DIV. No.	STATE	PROJECT No.			HIGHWAY No.	
CHECKED: RK	6	TEXAS				LP 1/SH 45	
DRAWN: JF	STATE DISTRICT	COUNTY		CONTROL No.	SECTION No.	JOB No.	SHEET No.
CHECKED: RK	AUSTIN	WILLIAMSON		0683	06	027	443

DATE: 4/11/2011 TIME: 10:37:37 AM
PLOT DRIVER: RD*11x17*PDF.plt
PEN TABLE: plotordr*ocon.tbl
FILE: r:\trans-design\o'connor\cadd\bdgyr-dcnw\0C45GLrnwdc06.dgn

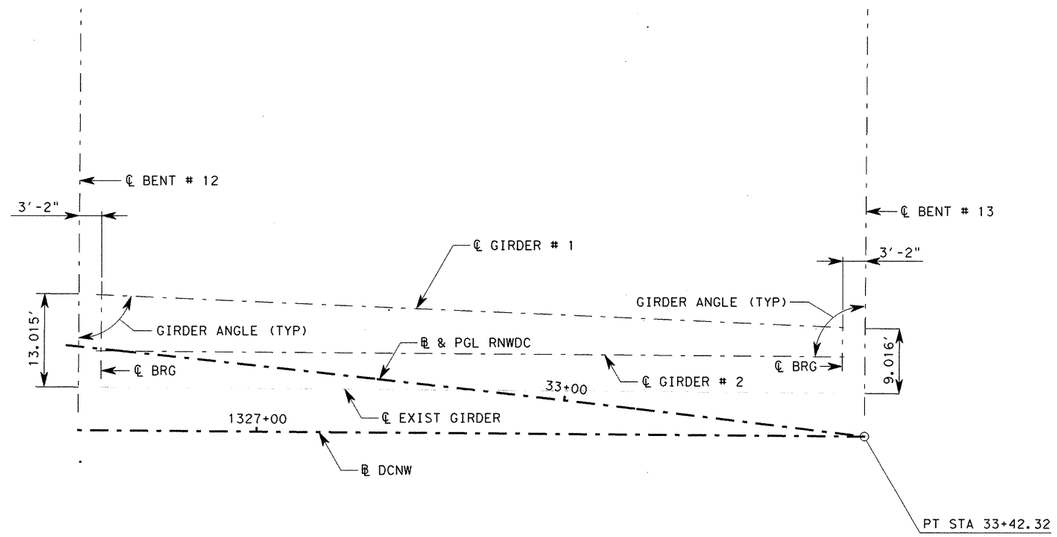

SPAN # 12

(TY Tx54 GIRDERS)

BENT REPORT

BENT REPORT

Bent 12 N 19° 43' 12.00" E

Distance between Station Line and Girder 1 6.000 L

		Girder Spancing (C.L. Bent	Girder Angle D	M	S
Span 12	Girder 1	0.000	87°	55'	07
	Girder 2	8.000	90°	00'	00
	Total	8.000			

Bent 13 N 19° 43' 12.00" E

Distance between Station Line and Girder 1 6.000 L

		Girder Spancing (C.L. Bent	Girder Angle D	M	S
Span 13	Girder 1	0.000	87°	55'	06
	Girder 2	4.000	90°	00'	00
	Total	4.000			

GIRDER REPORT

Girder Reprt Span 12

	Horizontal Distance C-C Bent	C-C Bearing	True Distance Bot. BM. FLG	Girder Slope
Girder 1	110.072	103.734	105.297	0.035
Girder 2	109.999	103.665	105.224	0.034

HL-93 LOADING

STATE OF TEXAS
RAMKUMAR KOZHIKOTE
103166
LICENSED
PROFESSIONAL ENGINEER

Ramkumar Kozhikote
4/11/2011

REV. No.	DATE	REVISION	BY
△			
△			
△			

PBSJ
an Atkins company TBPE REG. # F-474

Texas Department of Transportation
Austin District
©2011 by TxDOT

SH 45 / O'CONNOR DRIVE RAMP NORTH-WEST DC I-GIRDER LAYOUT (SPAN 12)

SCALE: 1"=20' SHEET 7 OF 7

DESIGNED: AUS	FED. RD DIV. No.	STATE	PROJECT No.			HIGHWAY No.	
CHECKED: RK	6	TEXAS				LP 1/SH 45	
DRAWN: JF	STATE DISTRICT	COUNTY	CONTROL No.	SECTION No.	JOB No.	SHEET No.	
CHECKED: RK	AUSTIN	WILLIAMSON	0683	06	027	444	

PLOT DRIVER: RD*11x17*PDF.plt
PEN TABLE: plotordr*ocon.tbl
FILE: r:\trans-design\o'connor\cadd\bdg\r-donw\OC45GLrnwdc07.dgn
DATE: 4/11/2011 TIME: 10:37:38 AM

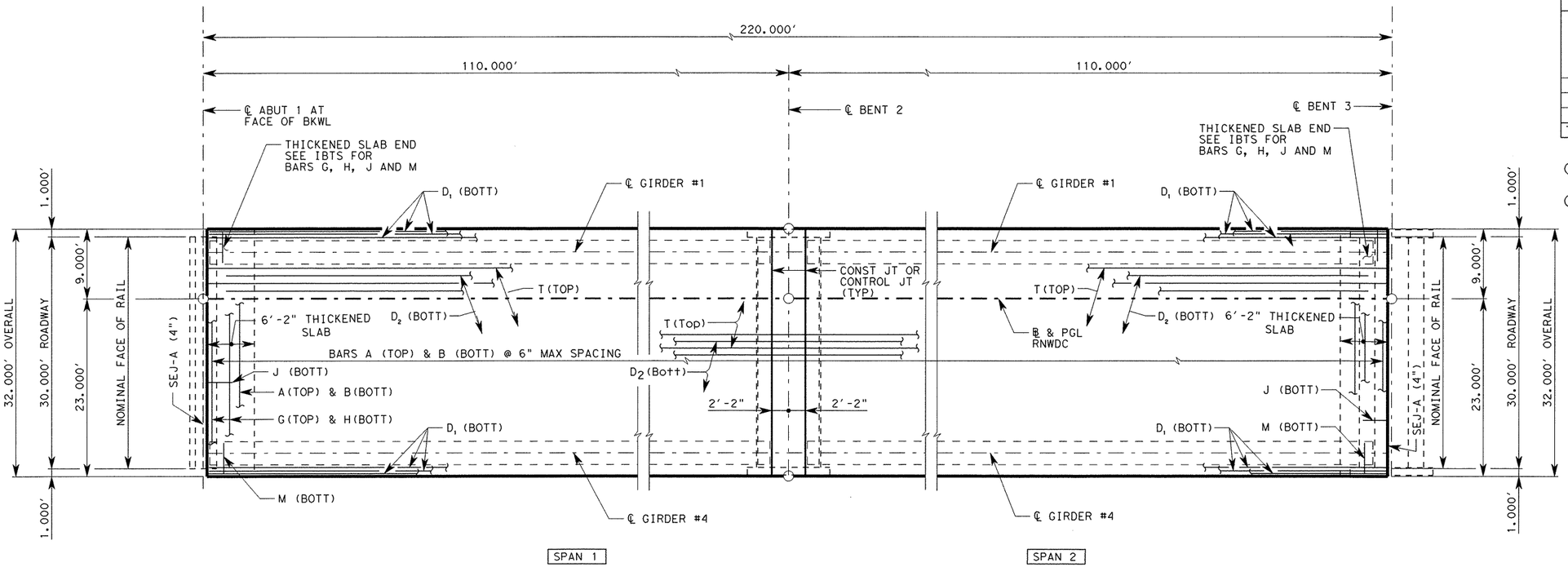

PLAN

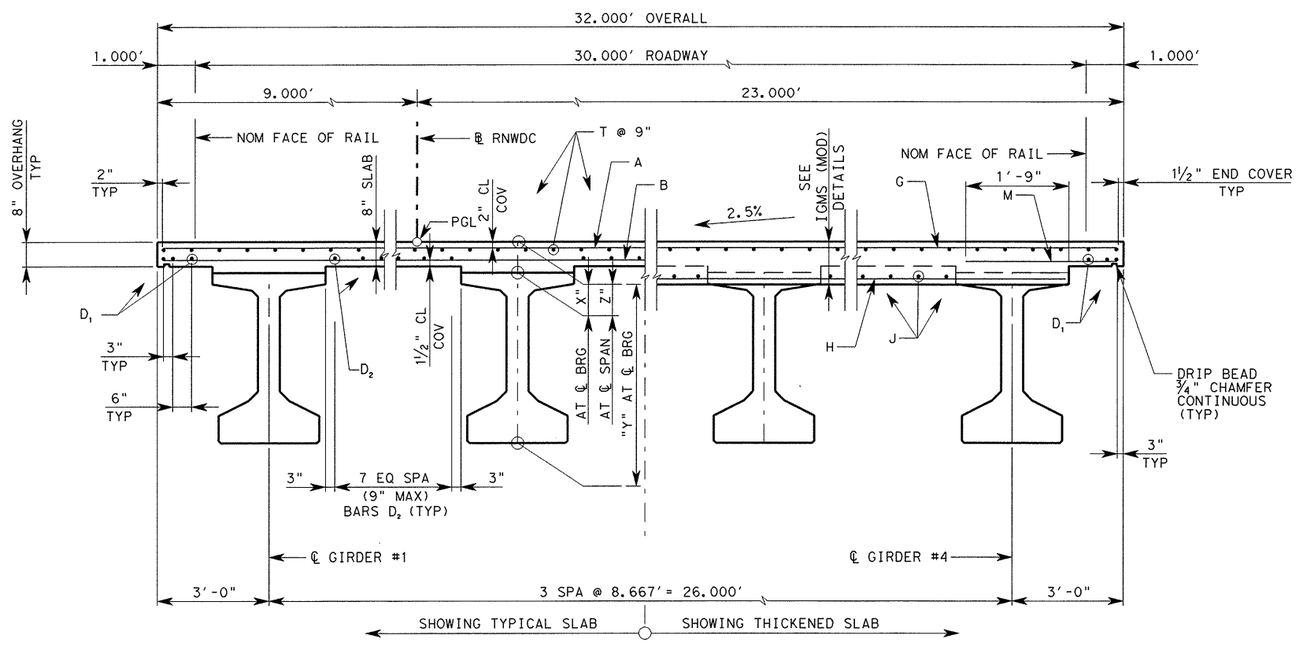

TYPICAL TRANSVERSE SECTION

Rev. 6/29/11

TABLE OF ESTIMATED QUANTITIES

SPAN	REINF CONCRETE SLAB	① PRESTR CONCRETE GIRDERS (TY Tx54)	CLASS "S" CONCRETE	② TOTAL REINF STEEL
	SF	LF	CY	LB
1	3,520	430	95.7	22,880
2	3,520	421	96.3	22,880
TOTAL	7,040	851	192.0	45,760

① LENGTHS SHOWN ARE BOTTOM FLANGE LENGTHS WITH ADJUSTMENTS MADE FOR GIRDER SLOPE.

② REINFORCING STEEL WEIGHT IS CALCULATED USING AN APPROXIMATE FACTOR OF 6.5 LB/SF.

BAR TABLE

BAR	SIZE
A	#5
B	#5
D	#5
G	#5
H	#5
J	#5
M	#5
T	#4

GENERAL NOTES:

1. DESIGNED ACCORDING TO AASHTO LRFD BRIDGE DESIGN SPECIFICATIONS, 4TH EDITION 2007 AND CURRENT INTERIMS FOR HL-93 LOADING.
2. SEE IGMS (MOD) STANDARD FOR THICKENED SLAB END DETAIL AND QUANTITY ADJUSTMENT
3. ~~THE USE OF PRECAST PANELS IS NOT ALLOWED.~~ △1
4. ALL REINFORCING SHOULD BE GRADE 60.
5. CONCRETE STRENGTH F'C = 4,000 PSI
6. BAR LAPS, WHERE REQUIRED, SHALL BE AS FOLLOWS:
   #4 = 1'-5"
   #5 = 1'-9"
7. SEE MISC. SLAB DETAILS FOR REINFORCING OVER BENTS
8. FOR DECK DRAIN LOCATION AND REINFORCEMENT DETAILS, SEE BRIDGE LAYOUT SHEETS AND BRIDGE DRAIN DETAIL SHEETS.

Ramkumar Kozhikote
June 2, 2011

STATE OF TEXAS
RAMKUMAR KOZHIKOTE
103166
LICENSED PROFESSIONAL ENGINEER

TABLE OF SECTION DEPTHS

SPAN NO.	"X" AT ℄ BRG	"Y" AT ℄ BRG	"Z" AT ℄ SPAN
1	11"	5'-5"	9 ¼"
2	11"	5'-5"	9 ¼"

SPAN NO	GIRDER NO	"A"	"B"
1	1-4	0.120'	0.171'
2	1-4	0.120'	0.171'

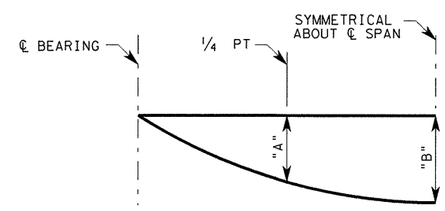

NOTE: DEFLECTIONS SHOWN ARE DUE TO CONCRETE SLAB ONLY. (E_c = 5 x 10^6 PSI) CALCULATED DEFLECTIONS SHOWN ARE THEORETICAL. ACTUAL DIMENSIONS MAY BE LESS. DEFLECTIONS SHALL BE ADJUSTED BASED ON FIELD OBSERVATIONS

DEAD LOAD DEFLECTION DIAGRAM

HL-93 LOADING

REV. No.	DATE	REVISION	BY
△1	Rev. 6/29/11		
△			
△			

PBSJ an Atkins company TBPE REG. # F-474

Texas Department of Transportation
Austin District
©2011 by TxDOT

SH 45 / O'CONNOR DRIVE RAMP NORTH-WEST DC 220.000' PRESTRESS CONC I-GIRDER UNIT (SPANS 1-2)

SCALE: NTS SHEET 1 OF 7

DESIGNED: AUS	FED. RD DIV. No.	STATE	PROJECT No.			HIGHWAY No.	
CHECKED: RK	6	TEXAS				LP 1/SH 45	
DRAWN: JF	STATE DISTRICT	COUNTY	CONTROL No.	SECTION No.	JOB No.	SHEET No.	
CHECKED: RK	AUSTIN	WILLIAMSON	0683	06	027	445	

DATE: 6/2/2011 TIME: 2:06:33 PM
PLOT DRIVER: RD*11x17*PDF.plt
PEN TABLE: plotordr*ocon.tbl
FILE: r:\trans-design\o'connor\cadd\bdg\r-dcnw\0C45GSrnwdc01.dgn

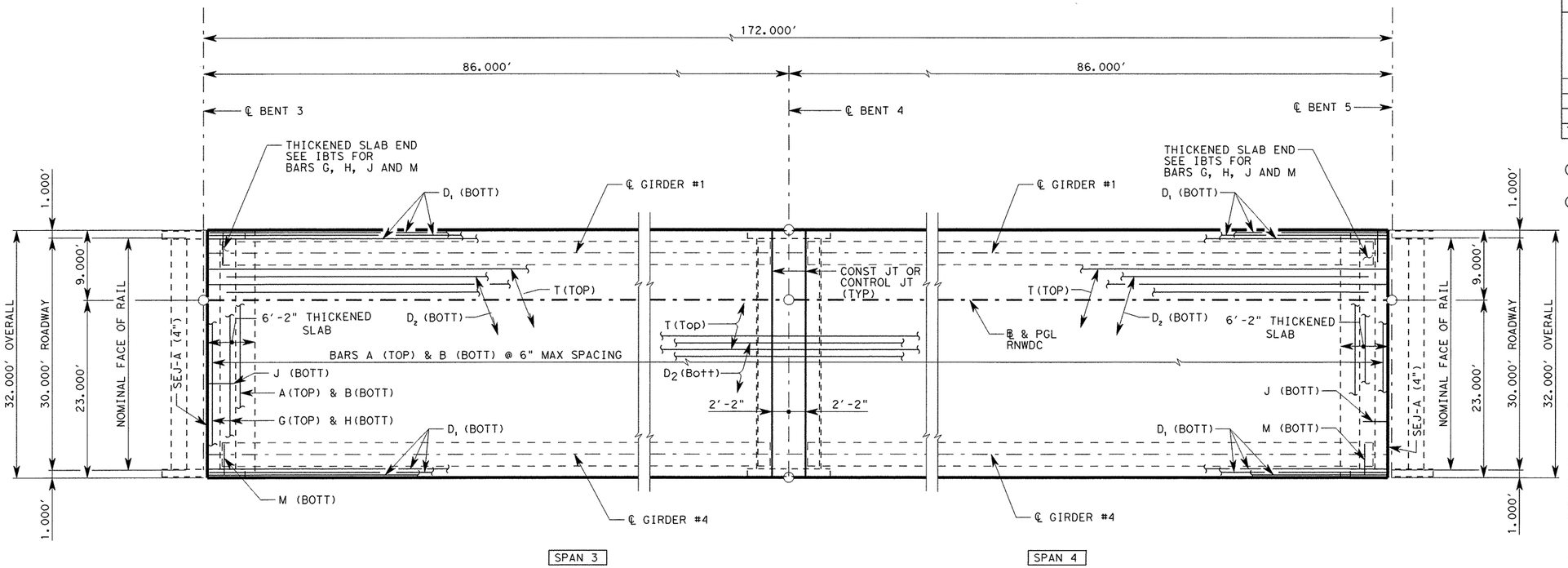

PLAN

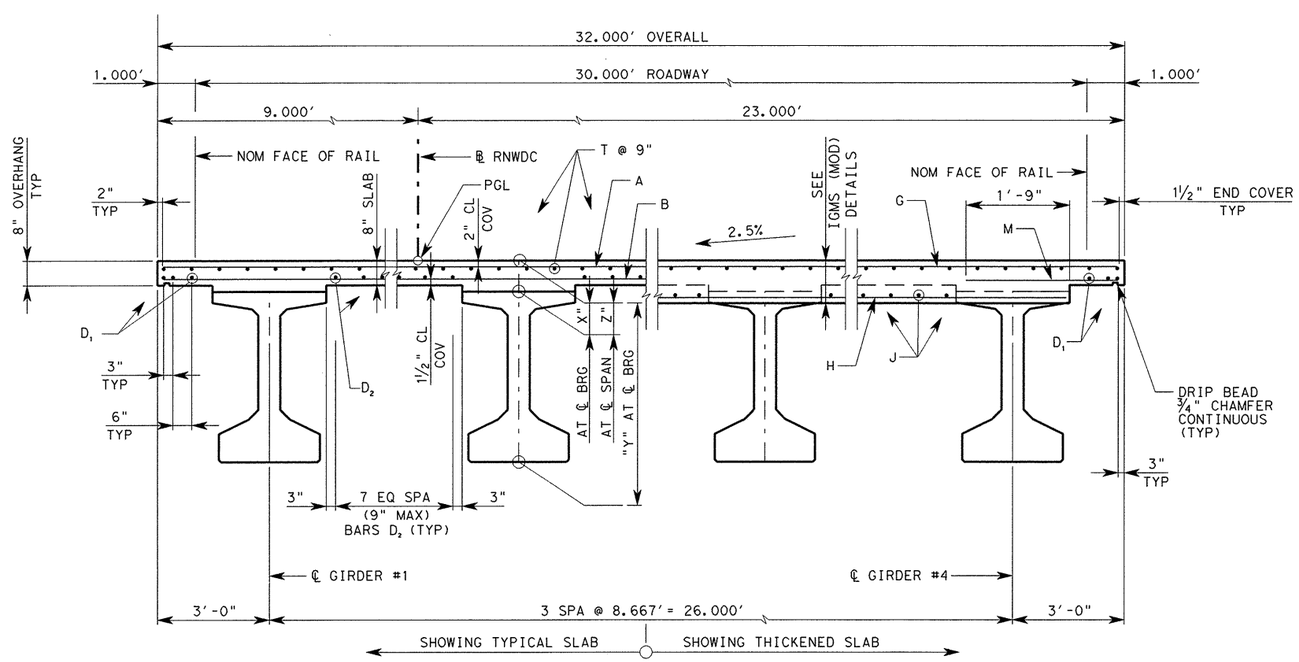

TYPICAL TRANSVERSE SECTION

TABLE OF ESTIMATED QUANTITIES

SPAN	REINF CONCRETE SLAB	① PRESTR CONCRETE GIRDERS (TY Tx54)	CLASS "S" CONCRETE	② TOTAL REINF STEEL
	SF	LF	CY	LB
3	2,752	325	75.5	17,888
4	2,752	325	75.5	17,888
TOTAL	5,504	650	151.0	35,776

① LENGTHS SHOWN ARE BOTTOM FLANGE LENGTHS WITH ADJUSTMENTS MADE FOR GIRDER SLOPE.

② REINFORCING STEEL WEIGHT IS CALCULATED USING AN APPROXIMATE FACTOR OF 6.5 LB/SF.

BAR TABLE

BAR	SIZE
A	#5
B	#5
D	#5
G	#5
H	#5
J	#5
M	#5
T	#4

GENERAL NOTES:

1. DESIGNED ACCORDING TO AASHTO LRFD BRIDGE DESIGN SPECIFICATIONS, 4TH EDITION 2007 AND CURRENT INTERIMS FOR HL-93 LOADING.
2. SEE IGNS (MOD) STANDARD FOR THICKENED SLAB END DETAIL AND QUANTITY ADJUSTMENT
3. ~~THE USE OF PRECAST PANELS IS NOT ALLOWED.~~ △1
4. ALL REINFORCING SHOULD BE GRADE 60.
5. CONCRETE STRENGTH F'C = 4,000 PSI
6. BAR LAPS, WHERE REQUIRED, SHALL BE AS FOLLOWS:
   #4 = 1'-5"
   #5 = 1'-9"
7. SEE MISC. SLAB DETAILS FOR REINFORCING OVER BENTS
8. FOR DECK DRAIN LOCATION AND REINFORCEMENT DETAILS, SEE BRIDGE LAYOUT SHEETS AND BRIDGE DRAIN DETAIL SHEETS.

Ramkumar Kozhikote
June 2, 2011

STATE OF TEXAS
RAMKUMAR KOZHIKOTE
103166
LICENSED
PROFESSIONAL ENGINEER

TABLE OF SECTION DEPTHS

SPAN NO.	"X" AT ℄ BRG	"Y" AT ℄ BRG	"Z" AT ℄ SPAN
3	10 ¼"	5'-4 ¼"	9"
4	10 ¼"	5'-4 ¼"	9"

SPAN NO	GIRDER NO	"A"	"B"
3	1-4	0.041'	0.059'
4	1-4	0.041'	0.059'

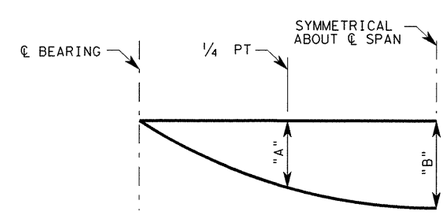

NOTE: DEFLECTIONS SHOWN ARE DUE TO CONCRETE SLAB ONLY. ($E_c = 5 \times 10^6$ PSI) CALCULATED DEFLECTIONS SHOWN ARE THEORETICAL. ACTUAL DIMENSIONS MAY BE LESS. DEFLECTIONS SHALL BE ADJUSTED BASED ON FIELD OBSERVATIONS

DEAD LOAD DEFLECTION DIAGRAM

HL-93 LOADING

REV. No.	DATE	REVISION	BY
△1	Rev. 6/29/11		
△			
△			

PBSJ an Atkins company TBPE REG. # F-474

Texas Department of Transportation Austin District
©2011 by TxDOT

SH 45 / O'CONNOR DRIVE RAMP NORTH-WEST DC 172.000' PRESTRESS CONC I-GIRDER UNIT (SPANS 3-4)

SCALE: NTS SHEET 2 OF 7

DESIGNED: AUS	FED. RD DIV. No.	STATE	PROJECT No.			HIGHWAY No.	
CHECKED: RK	6	TEXAS				LP 1/SH 45	
DRAWN: JF	STATE DISTRICT	COUNTY	CONTROL No.	SECTION No.	JOB No.	SHEET No.	
CHECKED: RK	AUSTIN	WILLIAMSON	0683	06	027	446	

Rev. 6/29/11

DATE: 6/2/2011 TIME: 2:06:36 PM
PLOT DRIVER: RD*11x17*PDF.plt
PEN TABLE: plotord*ocon.tbl
FILE: r:\trans-design\o'connor\oadd\bdg\r-dcnw\0C456srnwdc02.dgn

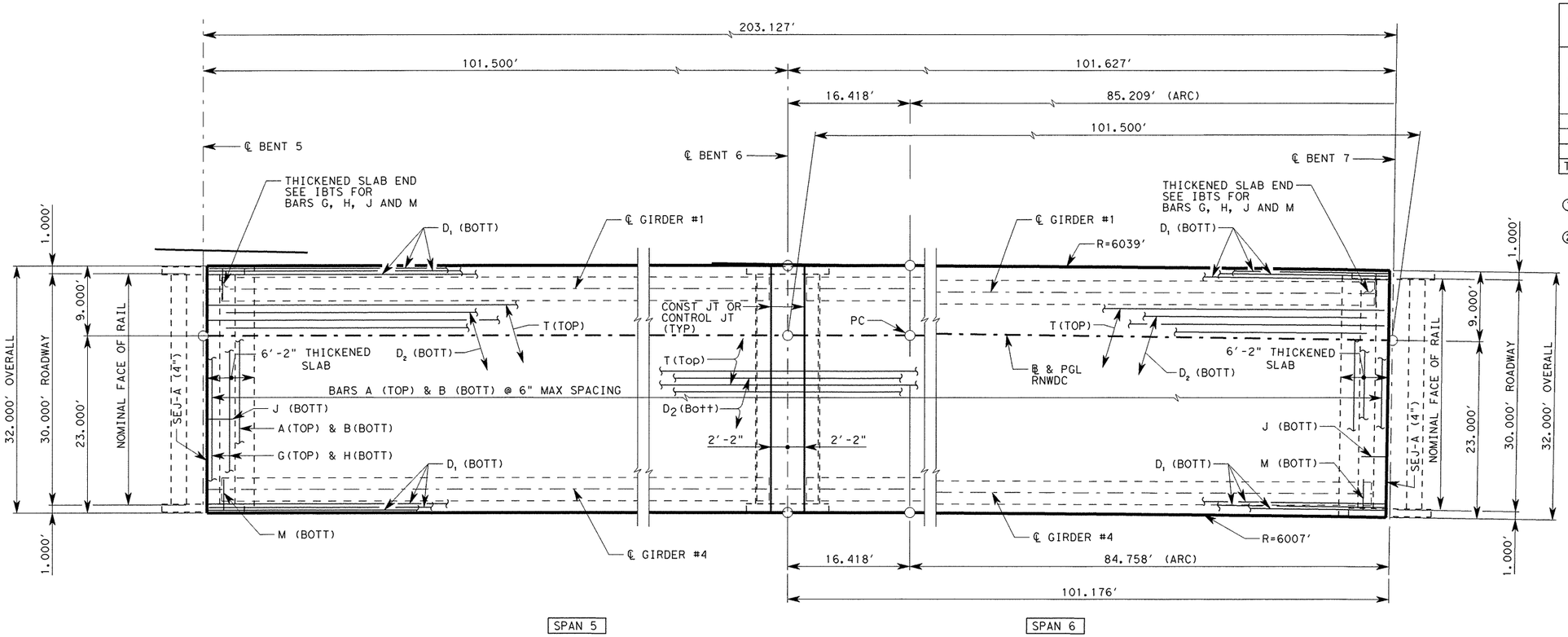

PLAN

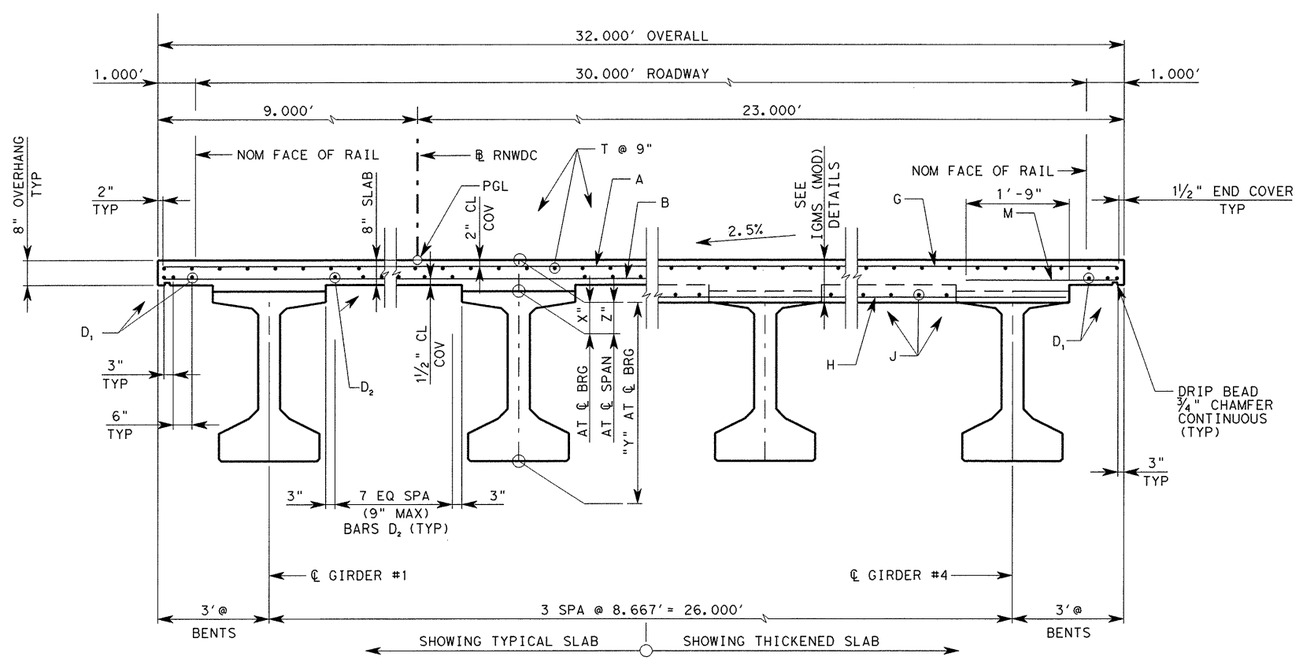

TYPICAL TRANSVERSE SECTION

TABLE OF ESTIMATED QUANTITIES

SPAN	REINF CONCRETE SLAB	① PRESTR CONCRETE GIRDERS (TY Tx54)	CLASS "S" CONCRETE	② TOTAL REINF STEEL
	SF	LF	CY	LB
5	3,248	387	88.9	21,112
6	3,245	387	88.8	21,091
TOTAL	6,493	774	177.7	42,203

① LENGTHS SHOWN ARE BOTTOM FLANGE LENGTHS WITH ADJUSTMENTS MADE FOR GIRDER SLOPE.

② REINFORCING STEEL WEIGHT IS CALCULATED USING AN APPROXIMATE FACTOR OF 6.5 LB/SF.

BAR TABLE

BAR	SIZE
A	#5
B	#5
D	#5
G	#5
H	#5
J	#5
M	#5
T	#4

GENERAL NOTES:

1. DESIGNED ACCORDING TO AASHTO LRFD BRIDGE DESIGN SPECIFICATIONS, 4TH EDITION 2007 AND CURRENT INTERIMS FOR HL-93 LOADING.
2. SEE IGMS (MOD) STANDARD FOR THICKENED SLAB END DETAIL AND QUANTITY ADJUSTMENT
3. ~~THE USE OF PREGAST PANELS IS NOT ALLOWED.~~ △1
4. ALL REINFORCING SHOULD BE GRADE 60.
5. CONCRETE STRENGTH F'C = 4,000 PSI
6. BAR LAPS, WHERE REQUIRED, SHALL BE AS FOLLOWS:
   #4 = 1'-5"
   #5 = 1'-9"
7. SEE MISC. SLAB DETAILS FOR REINFORCING OVER BENTS
8. FOR DECK DRAIN LOCATION AND REINFORCEMENT DETAILS, SEE BRIDGE LAYOUT SHEETS AND BRIDGE DRAIN DETAIL SHEETS.

Ramkumar Kozhikote
June 2, 2011

STATE OF TEXAS
RAMKUMAR KOZHIKOTE
103166
LICENSED
PROFESSIONAL ENGINEER

TABLE OF SECTION DEPTHS

SPAN NO.	"X" AT ℄ BRG	"Y" AT ℄ BRG	"Z" AT ℄ SPAN
5	11"	5'-5"	9 ¼"
6	11"	5'-5"	9 ¼"

SPAN NO	GIRDER NO	"A"	"B"
5	1-4	0.087'	0.124'
6	1-4	0.087'	0.124'

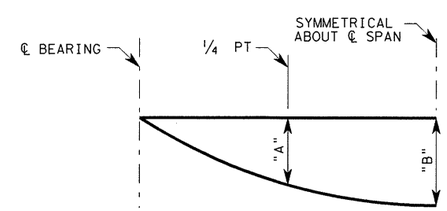

NOTE: DEFLECTIONS SHOWN ARE DUE TO CONCRETE SLAB ONLY. ($E_c = 5 \times 10^6$ PSI) CALCULATED DEFLECTIONS SHOWN ARE THEORETICAL. ACTUAL DIMENSIONS MAY BE LESS. DEFLECTIONS SHALL BE ADJUSTED BASED ON FIELD OBSERVATIONS

DEAD LOAD DEFLECTION DIAGRAM

Rev. 6/29/11

HL-93 LOADING

REV. No.	DATE	REVISION	BY
△1	Rev. 6/29/11		
△			
△			

PBSJ an Atkins company TBPE REG. # F-474

Texas Department of Transportation Austin District
©2011 by TxDOT

SH 45 / O'CONNOR DRIVE RAMP NORTH-WEST DC 203.000' PRESTRESS CONC I-GIRDER UNIT (SPANS 5-6)

SCALE: NTS SHEET 3 OF 7

DESIGNED: AUS	FED. RD DIV. No.	STATE	PROJECT No.			HIGHWAY No.	
CHECKED: RK	6	TEXAS				LP 1/SH 45	
DRAWN: JF	STATE DISTRICT	COUNTY	CONTROL No.	SECTION No.	JOB No.	SHEET No.	
CHECKED: RK	AUSTIN	WILLIAMSON	0683	06	027	447	

PLOT DRIVER: RD*11x17*PDF.plt
PEN TABLE: plotordr*ocon.tbl
FILE: r:\trans-design\o'connor\oadd\bdg\r-dcnw\OC45GSrnwdc03.dgn
DATE: 6/2/2011 TIME: 2:06:38 PM

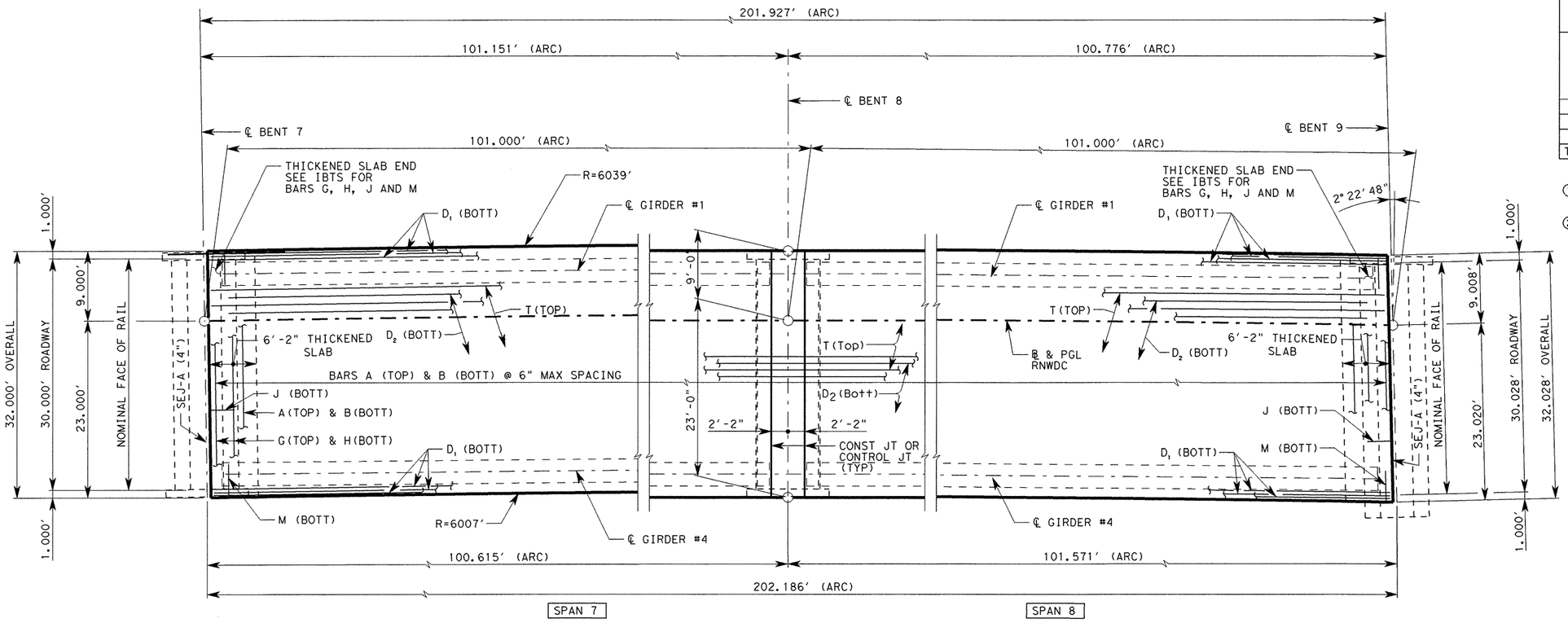

PLAN

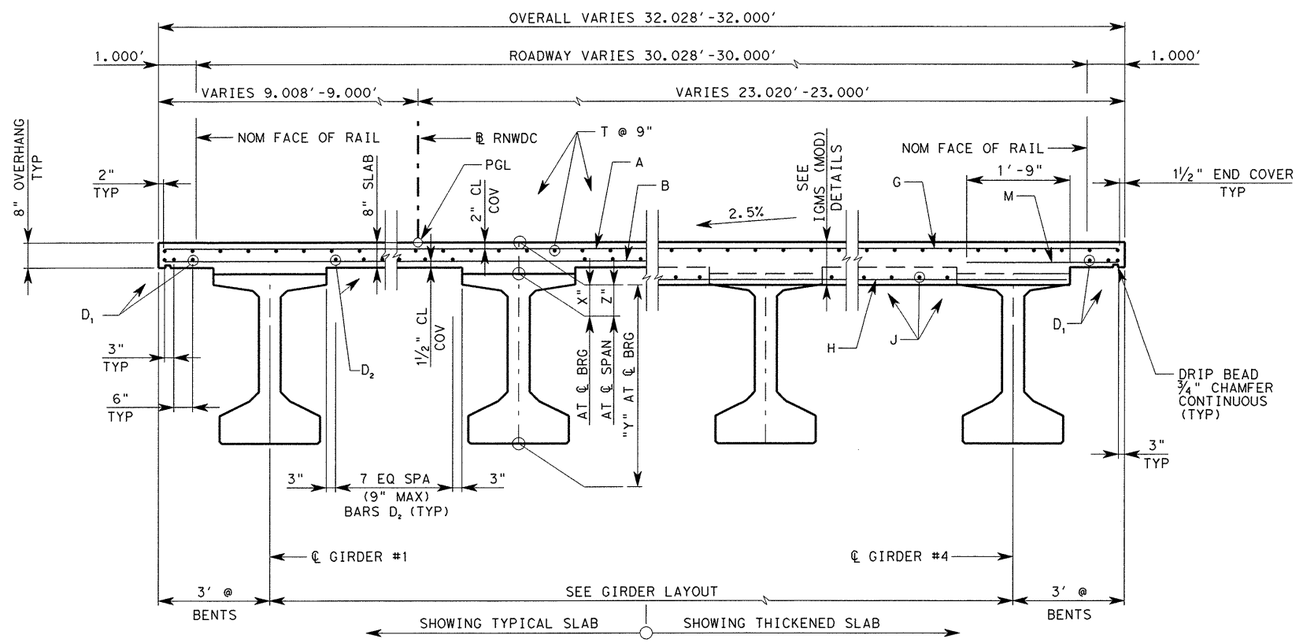

TYPICAL TRANSVERSE SECTION

TABLE OF ESTIMATED QUANTITIES

SPAN	REINF CONCRETE SLAB	① PRESTR CONCRETE GIRDERS (TY Tx54)	CLASS "S" CONCRETE	② TOTAL REINF STEEL
	SF	LF	CY	LB
7	3,228	384	88.4	20,984
8	3,238	386	88.7	21,044
TOTAL	6,466	770	177.1	42,028

① LENGTHS SHOWN ARE BOTTOM FLANGE LENGTHS WITH ADJUSTMENTS MADE FOR GIRDER SLOPE.

② REINFORCING STEEL WEIGHT IS CALCULATED USING AN APPROXIMATE FACTOR OF 6.5 LB/SF.

BAR TABLE

BAR	SIZE
A	#5
B	#5
D	#5
G	#5
H	#5
J	#5
M	#5
T	#4

GENERAL NOTES:

1. DESIGNED ACCORDING TO AASHTO LRFD BRIDGE DESIGN SPECIFICATIONS, 4TH EDITION 2007 AND CURRENT INTERIMS FOR HL-93 LOADING.
2. SEE IGMS (MOD) STANDARD FOR THICKENED SLAB END DETAIL AND QUANTITY ADJUSTMENT
3. ~~THE USE OF PRECAST PANELS IS NOT ALLOWED.~~ ⚠
4. ALL REINFORCING SHOULD BE GRADE 60.
5. CONCRETE STRENGTH F'C = 4,000 PSI
6. BAR LAPS, WHERE REQUIRED, SHALL BE AS FOLLOWS:
   #4 = 1'-5"
   #5 = 1'-9"
7. SEE MISC. SLAB DETAILS FOR REINFORCING OVER BENTS
8. FOR DECK DRAIN LOCATION AND REINFORCEMENT DETAILS, SEE BRIDGE LAYOUT SHEETS AND BRIDGE DRAIN DETAIL SHEETS.

Ramkumar Kozhikote
June 2, 2011

STATE OF TEXAS
RAMKUMAR KOZHIKOTE
103166
LICENSED
PROFESSIONAL ENGINEER

HL-93 LOADING

TABLE OF SECTION DEPTHS

SPAN NO.	"X" AT ℄ BRG	"Y" AT ℄ BRG	"Z" AT ℄ SPAN
7	11"	5'-5"	9 ¼"
8	11"	5'-5"	9 ¼"

SPAN NO	GIRDER NO	"A"	"B"
7	1-4	0.087'	0.124'
8	1-4	0.087'	0.124'

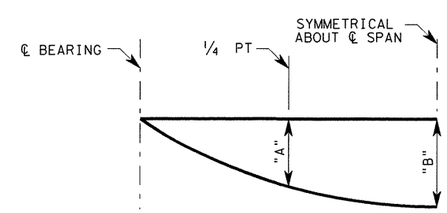

NOTE: DEFLECTIONS SHOWN ARE DUE TO CONCRETE SLAB ONLY. ($E_c = 5 \times 10^6$ PSI) CALCULATED DEFLECTIONS SHOWN ARE THEORETICAL. ACTUAL DIMENSIONS MAY BE LESS. DEFLECTIONS SHALL BE ADJUSTED BASED ON FIELD OBSERVATIONS

DEAD LOAD DEFLECTION DIAGRAM

Rev. 6/29/11

REV. No.	DATE	REVISION	BY
1	Rev. 6/29/11		
2			
3			

PBSJ
an Atkins company TBPE REG. # F-474

Texas Department of Transportation
Austin District
©2011 by TxDOT

SH 45 / O'CONNOR DRIVE RAMP NORTH-WEST DC 202.000' PRESTRESS CONC I-GIRDER UNIT (SPANS 7-8)

SCALE: NTS

SHEET 4 OF 7

DESIGNED: AUS	FED. DIV.	RD No.	STATE	PROJECT No.		HIGHWAY No.
CHECKED: RK	6		TEXAS			LP 1/SH 45

DRAWN: JF	STATE DISTRICT	COUNTY	CONTROL No.	SECTION No.	JOB No.	SHEET No.
CHECKED: RK	AUSTIN	WILLIAMSON	0683	06	027	448

DATE: 6/2/2011 TIME: 2:06:41 PM
PLOT DRIVER: RD*11x17*PDF.plt
PEN TABLE: plotordr*ocon.tbl
FILE: r:\trans-design\o'connor\cadd\bdg\r-dcnw\0C456Srnwdc04.dgn

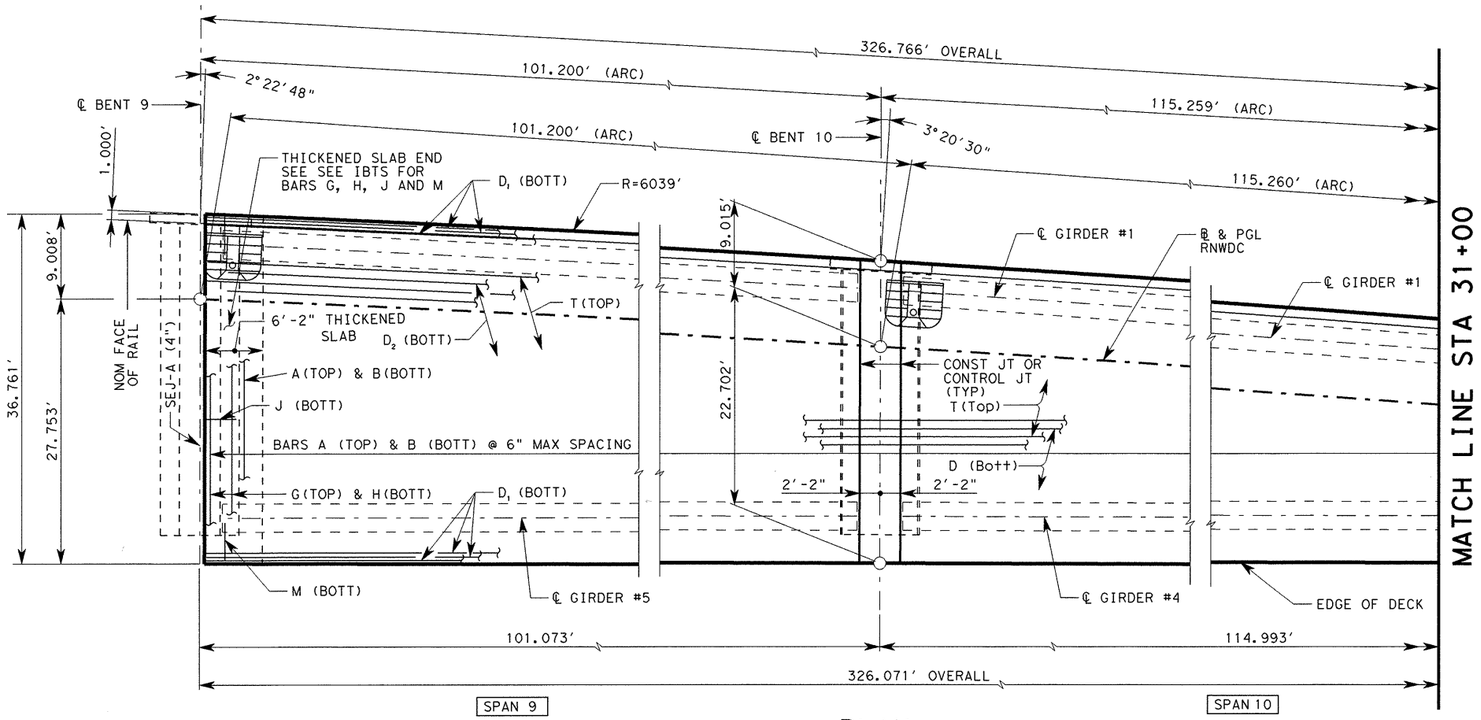

PLAN

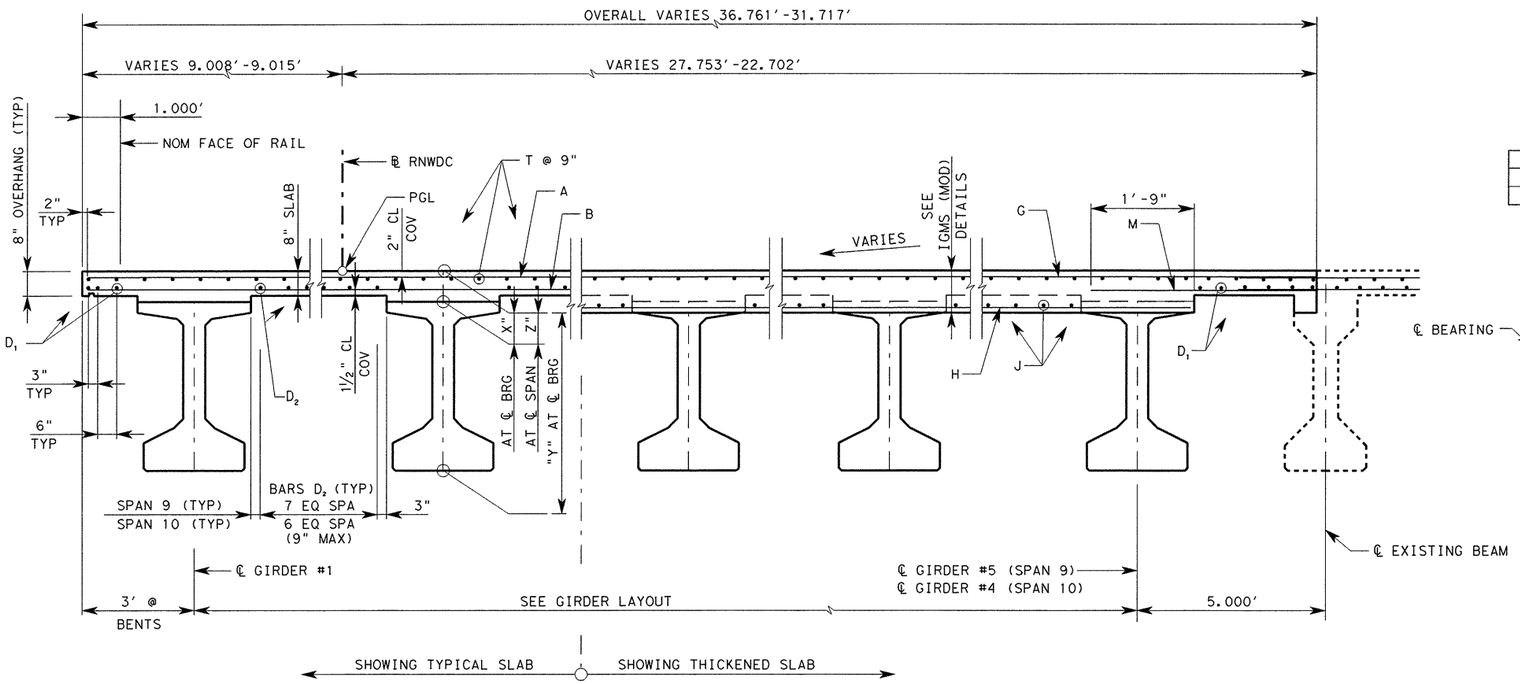

TYPICAL TRANSVERSE SECTION (SPAN 9 SHOWN)

TABLE OF ESTIMATED QUANTITIES

SPAN	REINF CONCRETE SLAB	① PRESTR CONCRETE GIRDERS (TY Tx54)	CLASS "S" CONCRETE	② TOTAL REINF STEEL
	SF	LF	CY	LB
9	3,475	482	96.2	22,587
10	3,211	441	87.8	20,872
11	2,182	316	60.4	14,181
TOTAL	8,868	1,239	244.4	57,640

① LENGTHS SHOWN ARE BOTTOM FLANGE LENGTHS WITH ADJUSTMENTS MADE FOR GIRDER SLOPE.

② REINFORCING STEEL WEIGHT IS CALCULATED USING AN APPROXIMATE FACTOR OF 6.5 LB/SF.

BAR TABLE

BAR	SIZE
A	#5
B	#5
D	#5
G	#5
H	#5
J	#5
M	#5
T	#4

GENERAL NOTES:

1. DESIGNED ACCORDING TO AASHTO LRFD BRIDGE DESIGN SPECIFICATIONS, 4TH EDITION 2007 AND CURRENT INTERIMS FOR HL-93 LOADING.
2. SEE IGMS (MOD) STANDARD FOR THICKENED SLAB END DETAIL AND QUANTITY ADJUSTMENT
3. ~~THE USE OF PRECAST PANELS IS NOT ALLOWED.~~ ⚠
4. ALL REINFORCING SHOULD BE GRADE 60.
5. CONCRETE STRENGTH F'C = 4,000 PSI
6. BAR LAPS, WHERE REQUIRED, SHALL BE AS FOLLOWS:
   #4 = 1'-5"
   #5 = 1'-9"
7. SEE MISC. SLAB DETAILS FOR REINFORCING OVER BENTS
8. FOR DECK DRAIN LOCATION AND REINFORCEMENT DETAILS, SEE BRIDGE LAYOUT SHEETS AND BRIDGE DRAIN DETAIL SHEETS.

TABLE OF SECTION DEPTHS

SPAN NO.	"X" AT ℄ BRG	"Y" AT ℄ BRG	"Z" AT ℄ SPAN
9	10 ½"	5'-4 ½"	9"
10	10 ¾"	5'-4 ¾"	9 ¼"

SPAN NO	GIRDER NO	"A"	"B"
9	1-5	0.067'	0.094'
10	1-4	0.113'	0.160'

Ramkumar Kozhikote
June 2, 2011

STATE OF TEXAS
RAMKUMAR KOZHIKOTE
103166
LICENSED
PROFESSIONAL ENGINEER

HL-93 LOADING

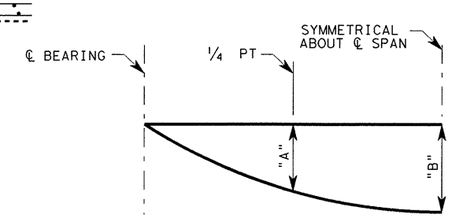

NOTE: DEFLECTIONS SHOWN ARE DUE TO CONCRETE SLAB ONLY. ($E_c = 5 \times 10^6$ PSI) CALCULATED DEFLECTIONS SHOWN ARE THEORETICAL. ACTUAL DIMENSIONS MAY BE LESS. DEFLECTIONS SHALL BE ADJUSTED BASED ON FIELD OBSERVATIONS

DEAD LOAD DEFLECTION DIAGRAM

Rev. 6/29/11

REV. No.	DATE	REVISION	BY
⚠	Revised 6/29/11		
△			
△			

PBSJ an Atkins company TBPE REG. # F-474

Texas Department of Transportation Austin District
©2011 by TxDOT

SH 45 / O'CONNOR DRIVE RAMP NORTH-WEST DC 326.880' PRESTRESS CONC I-GIRDER UNIT (SPANS 9-11)

SCALE: NTS SHEET 5 OF 7

DESIGNED: AUS	FED.RD DIV. No.	STATE	PROJECT No.	HIGHWAY No.
CHECKED: RK	6	TEXAS		LP 1/SH 45

DRAWN: JF	STATE DISTRICT	COUNTY	CONTROL No.	SECTION No.	JOB No.	SHEET No.
CHECKED: RK	AUSTIN	WILLIAMSON	0683	06	027	449

TIME: 2:06:44 PM
DATE: 6/2/2011
PLOT DRIVER: RD*11x17*PDF.plt
PEN TABLE: plotordr*ocon.tbl
FILE: T:\trans-design\o'connor\cadd\bdg\r-dnw\0C45GSrnwdc05.dgn

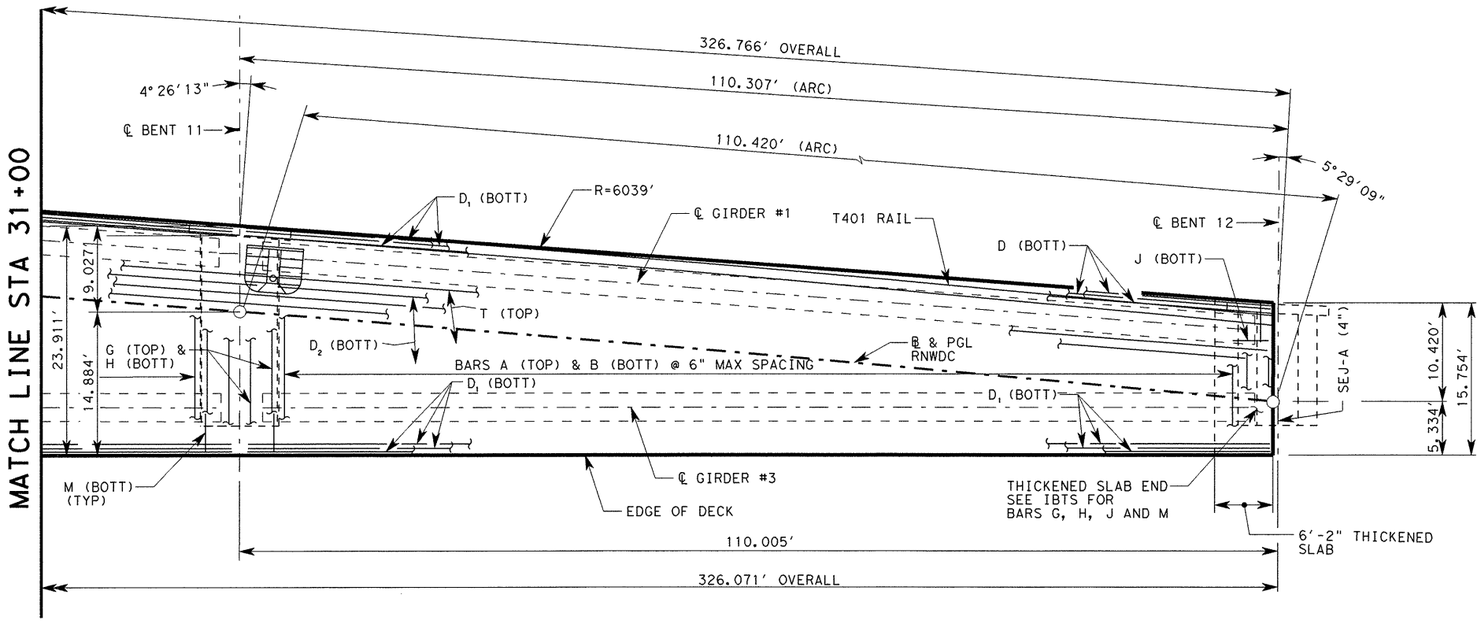

PLAN

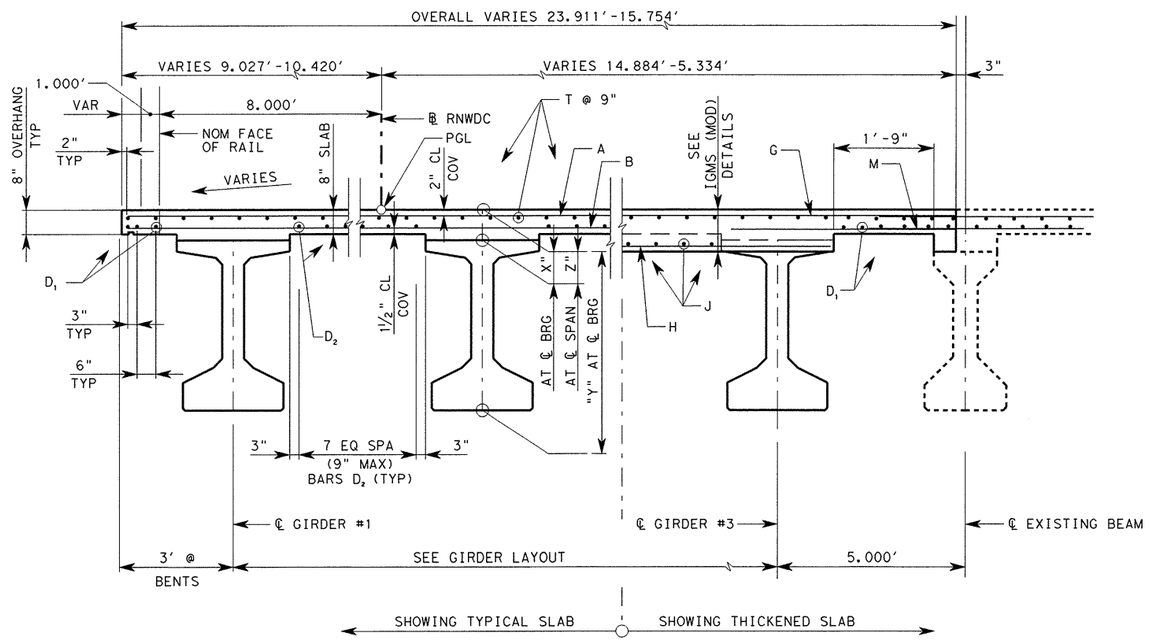

TYPICAL TRANSVERSE SECTION (SPAN 11 SHOWN)

BAR TABLE	
BAR	SIZE
A	#5
B	#5
D	#5
G	#5
H	#5
J	#5
M	#5
T	#4

GENERAL NOTES:

1. DESIGNED ACCORDING TO AASHTO LRFD BRIDGE DESIGN SPECIFICATIONS, 4TH EDITION 2007 AND CURRENT INTERIMS FOR HL-93 LOADING.
2. SEE IBTS STANDARD FOR THICKENED SLAB END DETAIL AND QUANTITY ADJUSTMENT
3. ~~THE USE OF PRECAST PANELS IS NOT ALLOWED.~~ △1
4. ALL REINFORCING SHOULD BE GRADE 60.
5. CONCRETE STRENGTH F'C = 4,000 PSI
6. BAR LAPS, WHERE REQUIRED, SHALL BE AS FOLLOWS:
   #4 = 1'-5"
   #5 = 1'-9"
7. SEE MISC. SLAB DETAILS FOR REINFORCING OVER BENTS
8. FOR DECK DRAIN LOCATION AND REINFORCEMENT DETAILS, SEE BRIDGE LAYOUT SHEETS AND BRIDGE DRAIN DETAIL SHEETS.

Ramkumar Kozhikote
June 2, 2011

STATE OF TEXAS
RAMKUMAR KOZHIKOTE
103166
LICENSED
PROFESSIONAL ENGINEER

TABLE OF SECTION DEPTHS			
SPAN NO.	"X" AT ℄ BRG	"Y" AT ℄ BRG	"Z" AT ℄ SPAN
11	10 ¼"	5'-4 ¼"	8 ¾"

SPAN NO	GIRDER NO	"A"	"B"
11	1-3	0.091'	0.129'

HL-93
LOADING

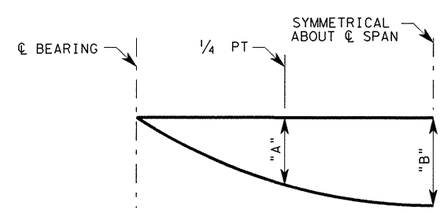

NOTE: DEFLECTIONS SHOWN ARE DUE TO CONCRETE SLAB ONLY. ($E_c = 5 \times 10^6$ PSI) CALCULATED DEFLECTIONS SHOWN ARE THEORETICAL. ACTUAL DIMENSIONS MAY BE LESS. DEFLECTIONS SHALL BE ADJUSTED BASED ON FIELD OBSERVATIONS

DEAD LOAD DEFLECTION DIAGRAM

Rev. 6/29/11

REV. No.	DATE	REVISION	BY
△1	Rev. 6/29/11		
△			
△			

PBSJ
an Atkins company
TBPE REG. # F-474

Texas Department of Transportation
Austin District
©2011 by TxDOT

SH 45 / O'CONNOR DRIVE
RAMP NORTH-WEST DC
326.880' PRESTRESS
CONC I-GIRDER UNIT
(SPANS 9-11)

SCALE: NTS
SHEET 6 OF 7

DESIGNED: AUS	FED.RD DIV. No.	STATE	PROJECT No.			HIGHWAY No.
CHECKED: RK	6	TEXAS				LP 1/SH 45
DRAWN: JF	STATE DISTRICT	COUNTY	CONTROL No.	SECTION No.	JOB No.	SHEET No.
CHECKED: RK	AUSTIN	WILLIAMSON	0683	06	027	450

DATE: 6/2/2011 TIME: 2:06:46 PM
PLOT DRIVER: RD*11x17*PDF.plt
PEN TABLE: plotordr*ocon.tbl
FILE: r:\trans-design\o'connor\odd\bdg\r-dcnw\0C45GSrnwdc06.dgn

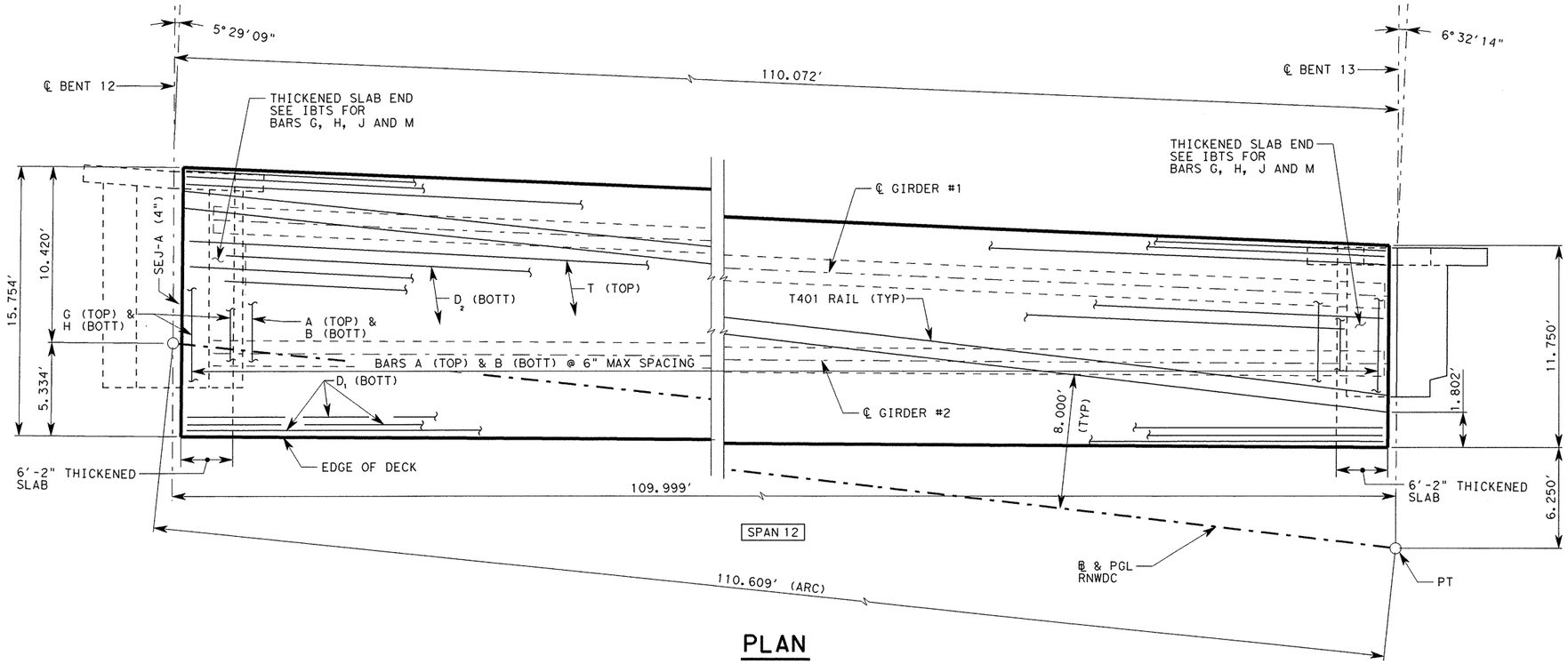

PLAN

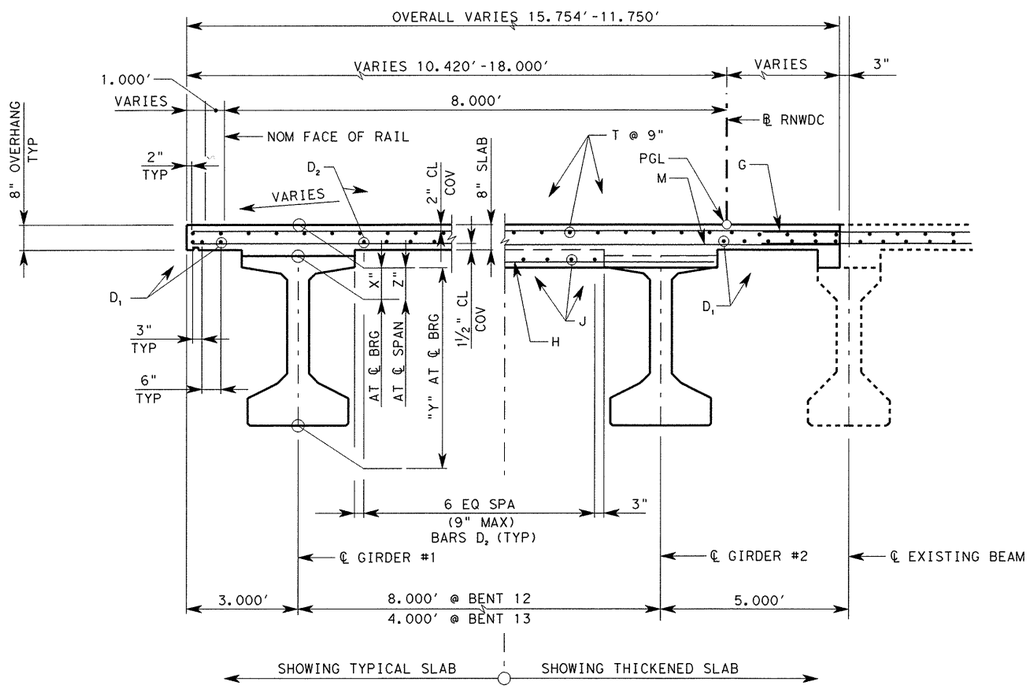

TYPICAL TRANSVERSE SECTION

TABLE OF ESTIMATED QUANTITIES

SPAN	REINF CONCRETE SLAB	① PRESTR CONCRETE GIRDERS (TY Tx54)	CLASS "S" CONCRETE	② TOTAL REINF STEEL
	SF	LF	CY	LB
12	1,513	211	42.0	9,832
TOTAL	1,513	211	42.0	9,832

① LENGTHS SHOWN ARE BOTTOM FLANGE LENGTHS WITH ADJUSTMENTS MADE FOR GIRDER SLOPE.

② REINFORCING STEEL WEIGHT IS CALCULATED USING AN APPROXIMATE FACTOR OF 6.5 LB/SF.

BAR TABLE

BAR	SIZE
A	#5
B	#5
D	#5
G	#5
H	#5
J	#5
M	#5
T	#4

GENERAL NOTES:

1. DESIGNED ACCORDING TO AASHTO LRFD BRIDGE DESIGN SPECIFICATIONS, 4TH EDITION 2007 AND CURRENT INTERIMS FOR HL-93 LOADING.
2. SEE IBTS STANDARD FOR THICKENED SLAB END DETAIL AND QUANTITY ADJUSTMENT
3. ~~THE USE OF PRECAST PANELS IS NOT ALLOWED.~~ △
4. ALL REINFORCING SHOULD BE GRADE 60.
5. CONCRETE STRENGTH F′C = 4,000 PSI
6. BAR LAPS, WHERE REQUIRED, SHALL BE AS FOLLOWS:
   #4 = 1′-5″
   #5 = 1′-9″
7. SEE MISC. SLAB DETAILS FOR REINFORCING OVER BENTS
8. FOR DECK DRAIN LOCATION AND REINFORCEMENT DETAILS, SEE BRIDGE LAYOUT SHEETS AND BRIDGE DRAIN DETAIL SHEETS.

Ramkumar Kozhikote
June 2, 2011

STATE OF TEXAS
RAMKUMAR KOZHIKOTE
103166
LICENSED
PROFESSIONAL ENGINEER

TABLE OF SECTION DEPTHS

SPAN NO.	"X" AT ℄ BRG	"Y" AT ℄ BRG	"Z" AT ℄ SPAN
12	10 ¼″	5′-4 ¼″	8 ¾″

SPAN NO	GIRDER NO	"A"	"B"
12	1-2	0.089′	0.126′

HL-93
LOADING

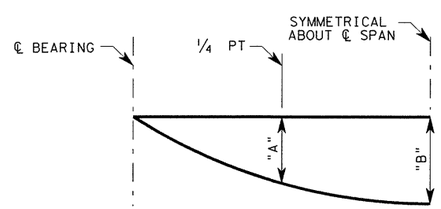

NOTE: DEFLECTIONS SHOWN ARE DUE TO CONCRETE SLAB ONLY. ($E_c = 5 \times 10^6$ PSI) CALCULATED DEFLECTIONS SHOWN ARE THEORETICAL. ACTUAL DIMENSIONS MAY BE LESS. DEFLECTIONS SHALL BE ADJUSTED BASED ON FIELD OBSERVATIONS

DEAD LOAD DEFLECTION DIAGRAM

Rev. 6/29/11

REV. No.	DATE	REVISION	BY
△1	Rev. 6/29/11		
△			
△			

PBSJ
an Atkins company
TBPE REG. # F-474

Texas Department of Transportation
Austin District
©2011 by TxDOT

SH 45 / O'CONNOR DRIVE RAMP NORTH-WEST DC 110.420′ PRESTRESS CONC I-GIRDER UNIT (SPAN 12)

SCALE: NTS
SHEET 7 OF 7

DESIGNED: AUS	FED.RD DIV. No.	STATE	PROJECT No.	HIGHWAY No.
CHECKED: RK	6	TEXAS		LP 1/SH 45

DRAWN: JF	STATE DISTRICT	COUNTY	CONTROL No.	SECTION No.	JOB No.	SHEET No.
CHECKED: RK	AUSTIN	WILLIAMSON	0683	06	027	451

DATE: 6/2/2011 TIME: 2:06:48 PM
PLOT DRIVER: RD*11x17*PDF.plt
PEN TABLE: plotordr*ocon.tbl
FILE: r:\trans-design\o'connor\oadd\bdg\r-dcnw\0C456Srnwdc07.dgn

DATE: 4/11/2011 TIME: 10:37:56 AM

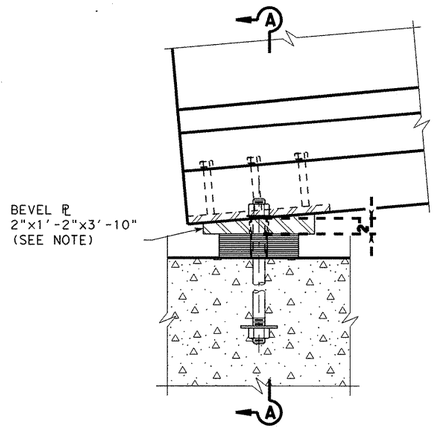

BEVEL PLATE DETAIL

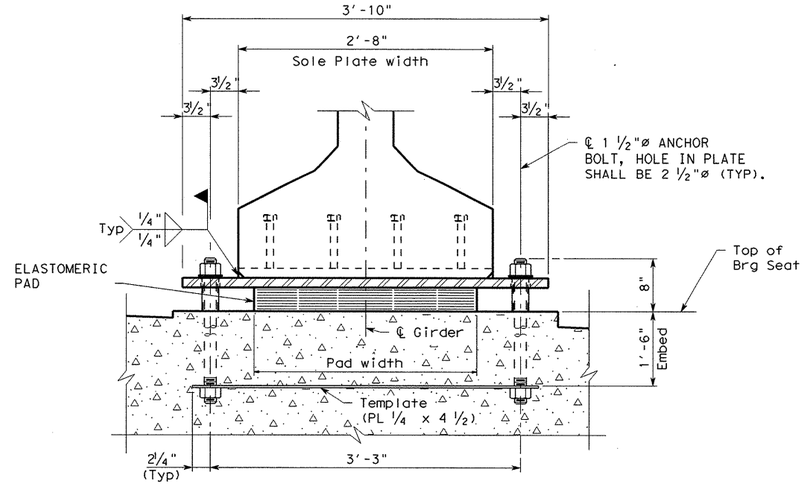

SECTION A-A

BEARING WITH ANCHOR BOLTS

NOTES:

BEVELED PLATE TOP SURFACE SHALL MATCH BEAM GRADE (SLOPE). SEE SPAN DETAILS FOR GRADE AT BEARING LOCATIONS.

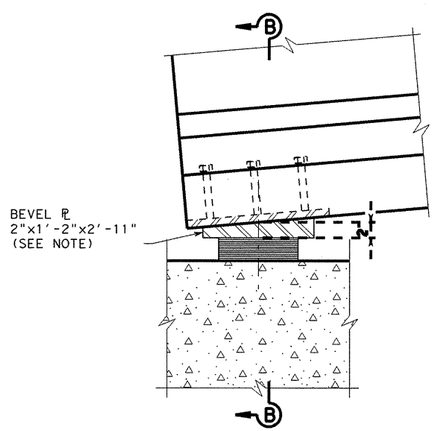

BEVEL PLATE DETAIL

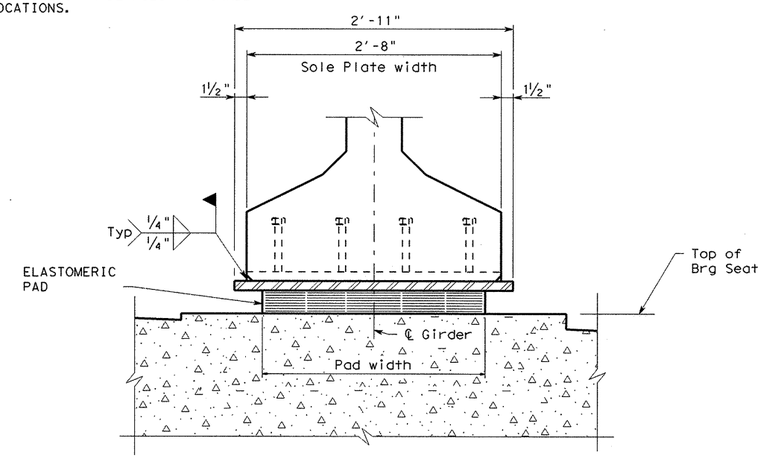

SECTION B-B

BEARING WITHOUT ANCHOR BOLTS

NOTES:

BEVELED PLATE TOP SURFACE SHALL MATCH BEAM GRADE (SLOPE). SEE SPAN DETAILS FOR GRADE AT BEARING LOCATIONS.

NOTES:

1. ALL DIMENSIONS TO THE REINFORCING STEEL ARE TO ℄ OF BAR UNLESS OTHERWISE NOTED.
2. FOR BEARING SEAT ELEVATION SEE ESTIMATED QUANTITIES AND BEARING SEAT ELEVATION SHEET.
3. BEARING SURFACE SHALL BE CLEAN AND FREE OF ALL LOOSE MATERIAL BEFORE PLACING BEARING PAD.
4. SEE "AESTHETIC TREATMENT REINFORCEMENT DETAILS" SHEET FOR AESTHETIC TREATMENT REINFORCEMENT DETAILS AND DIMENSIONS.
5. "H" - HEIGHTS SHOWN ARE APPROXIMATE. ACTUAL COLUMN HEIGHT SHALL BE FIELD VERIFIED PRIOR TO CONSTRUCTION.
6. ANCHOR BOLT SHALL BE ASTM F1554 GRADE 55 WITH ASTM A563 GRADE A HEAVY HEX NUTS.

STATE OF TEXAS
RAMKUMAR KOZHIKOTE
103166
LICENSED
PROFESSIONAL ENGINEER

HL-93 LOADING

Ramkumar Kozhikote 4/11/2011

REV. No.	DATE	REVISION	BY
△			
△			
△			

PBSJ
an Atkins company
TBPE REG. # F-474

Texas Department of Transportation
Austin District
©2011 by TxDOT

SH 45 / O'CONNOR DRIVE RAMP NORTH WEST DC BEARING DETAILS

SCALE: 1"=1'H, 1"=1'V

SHEET 1 OF 1

DESIGNED: RBR	FED. RD DIV. No.	STATE	PROJECT No.			HIGHWAY No.	
CHECKED: OAS	6	TEXAS				LP 1/SH 45	
DRAWN: RBR	STATE DISTRICT	COUNTY	CONTROL No.	SECTION No.	JOB No.	SHEET No.	
CHECKED: OAS	AUSTIN	WILLIAMSON	0683	06	027	452	

PLOT DRIVER: RD*11x17*PDF.plt
PEN TABLE: plotordr*ocon.tbl
FILE: r:\trans-design\o'connor\cadd\bdg\r-dcnw\OC45GDrnwdc02.dgn

DESIGNED GIRDERS (DEPRESSED STRANDS) / OPTIONAL DESIGN

STRUCTURE	SPAN NO.	GIRDER NO.	GIRDER TYPE	NON-STD STRAND PATTERN	PRESTRESSING STRANDS: TOTAL NO.	SIZE (in)	STRGTH fpu (ksi)	"e" ℄ (in)	"e" END (in)	DEPRESSED: NO.	DEPRESSED: TO (in)	CONCRETE: RELEASE STRGTH f'ci (ksi)	CONCRETE: MINIMUM 28 DAY COMP STRGTH f'c (ksi)	DESIGN LOAD COMP STRESS (TOP ℄) (SERVICE I) fct(ksi)	DESIGN LOAD TENSILE STRESS (BOTT ℄) (SERVICE III) fcb(ksi)	REQUIRED MINIMUM ULTIMATE MOMENT CAPACITY (STRENGTH I) (ft-kips)	LIVE LOAD DISTRIB FACTOR ①
RNWDC	1-2	ALL	Tx54		60	1/2	270	17.61	10.94	10	50.5	5.9	6.2	3.957	-3.943	7814	0.702
RNWDC	3-4	ALL	Tx54		28	1/2	270	20.01	17.72	4	20.5	4	5	2.279	-2.384	4983	0.751
RNWDC	5-8	ALL	Tx54		46	1/2	270	18.66	11.36	8	50.5	4.6	5.1	3.221	-3.281	6632	0.715
RNWDC	9	ALL	Tx54		38	1/2	270	19.22	12.59	6	48.5	4	5	2.924	-2.89	5752	0.622
RNWDC	10	ALL	Tx54		56	1/2	270	17.94	10.79	10	50.5	5.5	5.8	3.891	-3.79	7371	0.617
RNWDC	11	ALL	Tx54		69	1/2	270	16.83	9.42	14	50.5	6.3	6.5	3.958	-4.21	9050	1.000
RNWDC	12	ALL	Tx54		52	1/2	270	18.24	12.08	8	48.5	5.3	5.7	3.633	-3.643	7074	0.600

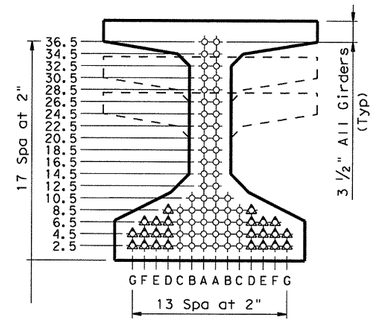

TYPE Tx28, Tx34 & Tx40 ②

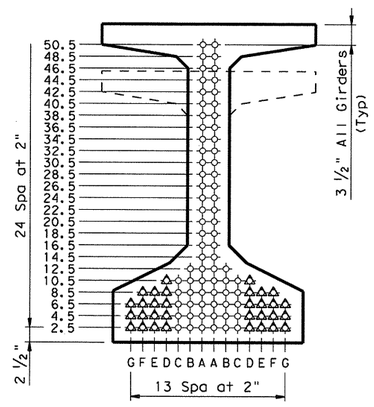

TYPE Tx46 & Tx54 ②

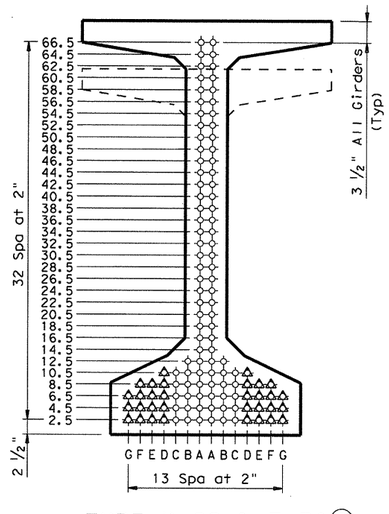

TYPE Tx62 & Tx70 ②

NON-STANDARD STRAND PATTERNS

PATTERN	STRAND ARRANGEMENT AT ℄ OF GIRDER

GENERAL NOTES:

Designed in accordance with AASHTO LRFD Specifications. All concrete must be Class H. Provide Class H(HPC) if shown elsewhere in plans. All reinforcing bars must be Grade 60.

When shown on this sheet, the Fabricator has the option of furnishing either the designed depressed strand girder or an approved optional design. All optional design submittals must be signed, sealed and dated by a registered Professional Engineer.

Optional designs for girders 120 feet or longer must have a calculated residual camber equal to or greater than that of the designed girder.

Prestress losses for the designed girders have been calculated for a relative humidity of 65 percent. Optional designs must likewise conform.

For depressed strand designed girders, strands must be located as low as possible on the 2" grid system unless a Non-Standard Strand Pattern is indicated. Fill row "2.5", then row "4.5", then row "6.5", etc., beginning each row in the "A" position and working outward until the required number of strands is reached. All strands in the "A" position must be depressed, maintaining the 2" spacing so that, at the girder ends, the upper two strands are in the position shown in the table.

Strands for the designed girder must be low relaxation strands pretensioned to 75 percent of fpu each.

Seal cracks in girder ends exceeding 0.005" in width as directed by the Engineer. The fabricator is permitted to decrease the spacing of Bars R and S by providing additional bars to help limit crack width provided the decreased spacing results in no less than 1" clear between bars. The fabricator must take an approved corrective action if cracks greater than 0.005" form on a repetitive basis.

STATE OF TEXAS
RAMKUMAR KOZHIKOTE
103166
LICENSED
PROFESSIONAL ENGINEER

Ramkumar Kozhikote
4/11/2011

① Portion of full HL93

② Full-length debonded strands are only permitted in strand positions marked △. Double wrap full-length debonded strands in outermost position of each row. Full-length debonding must comply with Item 426.4.F.4.

HL93 LOADING

Texas Department of Transportation
Bridge Division

PRESTRESSED CONCRETE I-GIRDER DESIGNS (NON-STANDARD SPANS)

IGND

FILE: ignds1e1.dgn	DN: TxDOT	CK: TxDOT	DW: TxDOT	CK: TxDOT
© TxDOT June 2007	DISTRICT	FEDERAL AID PROJECT		SHEET
REVISIONS 02/09: General Notes. 10/09: General Notes.	AUSTIN			453
	COUNTY		CONTROL-SECT-JOB	HIGHWAY
	WILLIAMSON		0683-06-925, ETC.	IH 35, LOOP 1

DISCLAIMER:
The use of this standard is governed by the "Texas Engineering Practice Act". No warranty of any kind is made by TxDOT for any purpose whatsoever. TxDOT assumes no responsibility for the conversion of this standard to other formats or for incorrect results or damages resulting from its use.

LEVELS DISPLAYED
1 2 3 4 5 6 7 8 9 0 1 1 2 3 4 5 6
7 8 9 0 1 2 3 4 5 6 7 8 9 0 1 2 3 4
3 3 3 3 3 3 3 3 3 3 3 3 3 3 3 3 3
4 9 5 0 5 1 2 5 3 4 5 5 6 5 7 8 9 5 6 1 6 2 6 3

ACC:

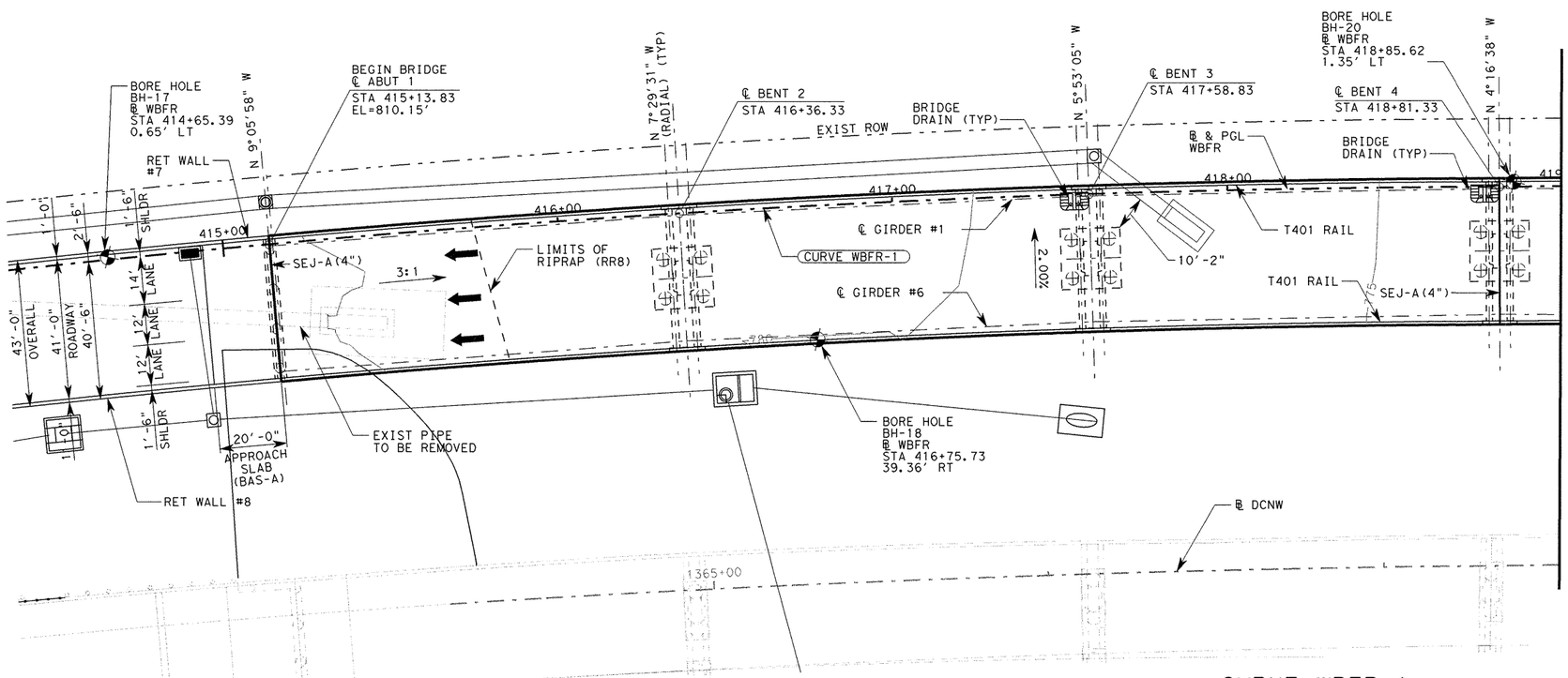

PLAN

NOTES:

1. DESIGNED ACCORDING TO AASHTO LRFD BRIDGE DESIGN SPECIFICATIONS, 4TH EDITION 2007 AND CURRENT INTERIMS FOR HL-93 LOADING.
2. FOR BORING LOGS SEE "BORING LOGS" SHEETS.
3. DRILLED SHAFTS ARE DESIGNED WITH POINT BEARING AND SKIN FRICTION TO BE FOUNDED AT ELEVATIONS SHOWN OR LOWER AS NECESSARY TO PENETRATE A MINIMUM OF TWO SHAFT DIAMETERS INTO UNWEATHERED LIMESTONE.
4. "H" - HEIGHTS SHOWN ARE APPROXIMATE. ACTUAL COLUMN HEIGHTS SHALL BE FIELD VERIFIED PRIOR TO CONSTRUCTION.
5. ALL BENTS ARE RADIAL UNLESS OTHERWISE NOTED.
6. FURNISH AND INSTALL 2 - 2" DIA. PVC CONDUITS IN EACH BRIDGE RAIL.

0 10 20 40

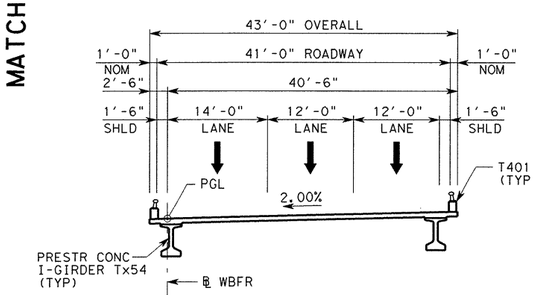

TYPICAL SECTION

(ABUTMENT 1 TO STA 421+93.00)
NTS

Ramkumar Kozhikote
June 2, 2011

STATE OF TEXAS
RAMKUMAR KOZHIKOTE
103166
LICENSED PROFESSIONAL ENGINEER

CURVE WBFR-1

PI STA 416+46.92
N 10,149,435.3715
E 3,120,879.1887
Δ = 19°57'53" (RT)
T = 768.53'
L = 1521.48'
R = 4366.39'
PC STA 408+78.39
PT STA 423+99.87

HYDRAULIC DATA		
		100 YR
Q	CFS	7857
V	FT/SEC	0.65

DESIGN SPEED: 40 MPH
ADT: 21,800 (2040)
RFC:
URBAN - PRINCIPAL ARTERIAL
NBI: 14-246-0-0683-06-486

HL-93 LOADING

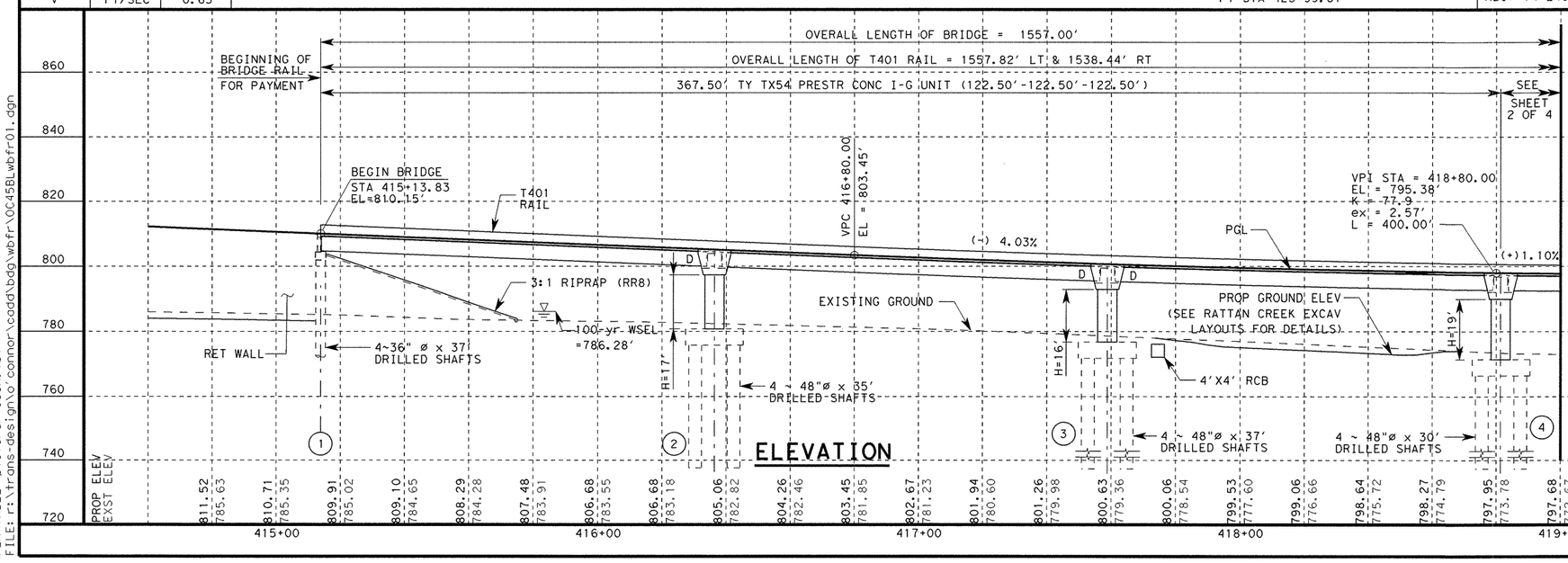

ELEVATION

REV. No.	DATE	REVISION	BY
△			
△			
△			

PBSJ an Atkins company TBPE REG. # F-474

Texas Department of Transportation
Austin District
©2011 by TxDOT

SH 45 / O'CONNOR DRIVE WB FRONTAGE RD BRIDGE LAYOUT

SCALE: 1"=40'H, 1"=40'V SHEET 1 OF 4

DESIGNED: AMG	FED. RD DIV. No.	STATE	PROJECT No.			HIGHWAY No.
CHECKED: AUS	6	TEXAS				LP 1/SH 45
DRAWN: DW	STATE DISTRICT	COUNTY	CONTROL No.	SECTION No.	JOB No.	SHEET No.
CHECKED: AUS	AUSTIN	WILLIAMSON	0683	06	027	454

PLOT DRIVER: RD*11x17*PDF.plt
PEN TABLE: plotordr*ocon.tbl
FILE: r:\trans-design\o'connor\cadd\bdg\wbfr\0C45BLwbfr01.dgn
DATE: 6/2/2011 TIME: 2:16:16 PM

DATE: 4/11/2011 TIME: 10:38:06 AM

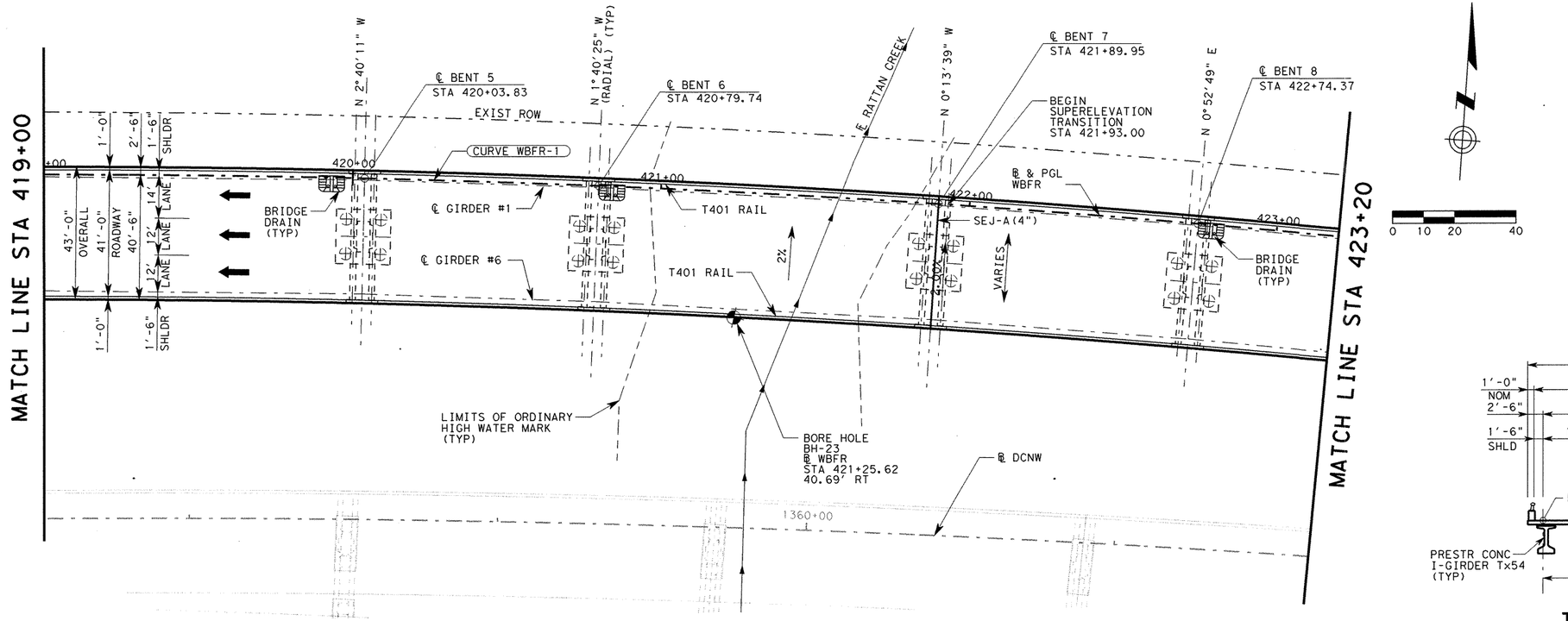

PLAN

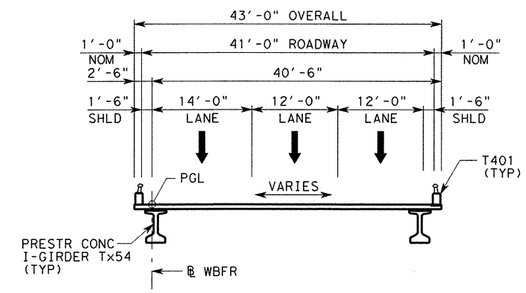

TYPICAL SECTION

(STA 421+93.00 TO BENT 11)
NTS

CURVE WBFR-1

PI STA 416+46.92
N 10,149,435.3715
E 3,120,879.1887
Δ = 19°57'53" (RT)
T = 768.53'
L = 1521.48'
R = 4366.39'
PC STA 408+78.39
PT STA 423+99.87

HYDRAULIC DATA		
		100 YR
Q	CFS	7857
V	FT/SEC	0.65

DESIGN SPEED: 40 MPH
ADT: 21,800 (2040)
RFC:
URBAN - PRINCIPAL ARTERIAL
NBI: 14-246-0-0683-06-486

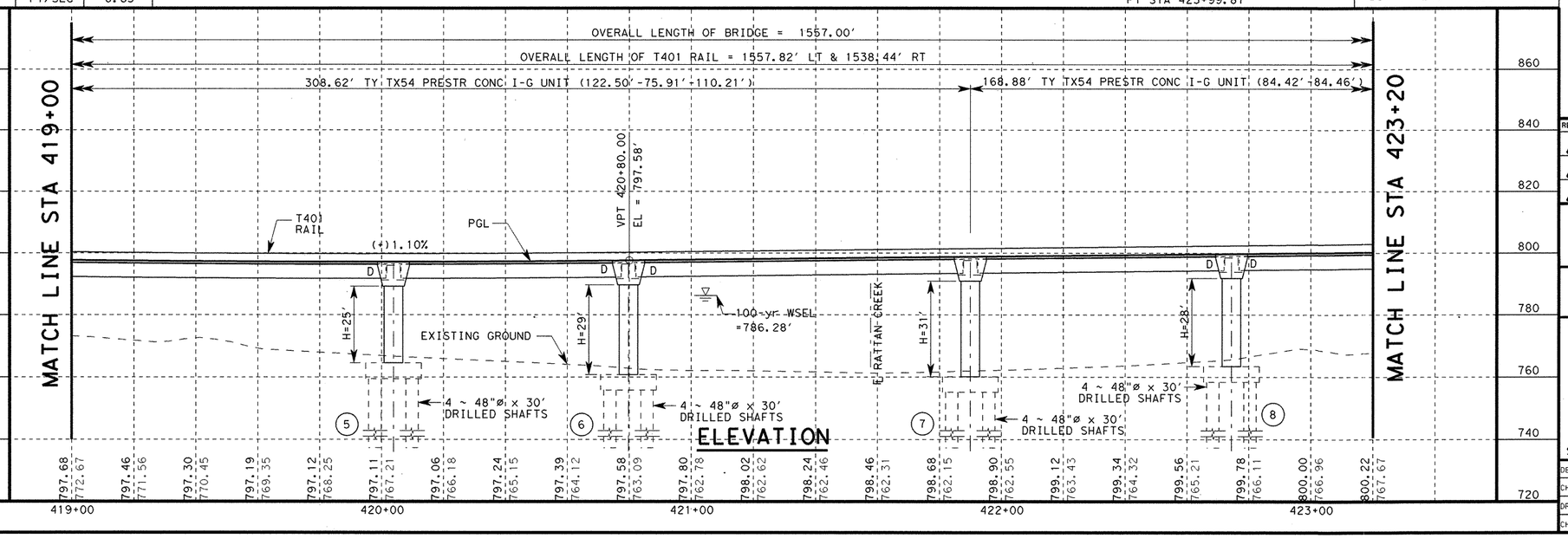

ELEVATION

HL-93 LOADING

STATE OF TEXAS
RAMKUMAR KOZHIKOTE
103166
LICENSED PROFESSIONAL ENGINEER
Ramkumar Kozhikote 4/11/2011

REV. No.	DATE	REVISION	BY
△			
△			
△			

PBSJ an Atkins company TBPE REG. # F-474

Texas Department of Transportation
Austin District
©2011 by TxDOT

SH 45 / O'CONNOR DRIVE WB FRONTAGE RD BRIDGE LAYOUT

SCALE: 1"=40'H, 1"=40'V SHEET 2 OF 4

DESIGNED: AMG	FED. RD DIV. No.	STATE	PROJECT No.			HIGHWAY No.	
CHECKED: AUS	6	TEXAS				LP 1/SH 45	
DRAWN: DW	STATE DISTRICT	COUNTY	CONTROL No.	SECTION No.	JOB No.	SHEET No.	
CHECKED: AUS	AUSTIN	WILLIAMSON	0683	06	027	455	

PLOT DRIVER: RD*11x17*PDF.plt
PEN TABLE: plotordr*ocon.tbl
FILE: r:\trans-design\o'connor\oddy\bdg\wbfr\OC45BLwbfr02.dgn

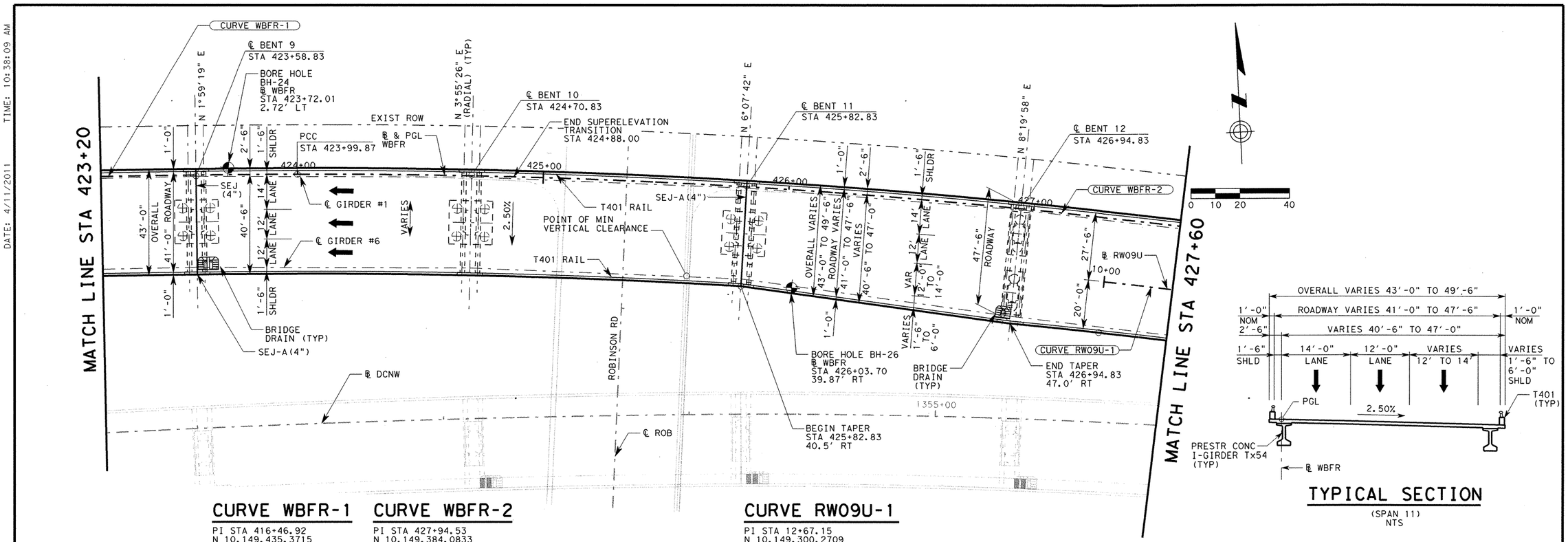

TYPICAL SECTION

(SPAN 11)
NTS

PLAN

CURVE WBFR-1

PI STA 416+46.92
N 10,149,435.3715
E 3,120,879.1887
Δ = 19°57'53" (RT)
T = 768.53'
L = 1521.48'
R = 4366.39'
PC STA 408+78.39
PT STA 423+99.87

CURVE WBFR-2

PI STA 427+94.53
N 10,149,384.0833
E 3,122,041.2469
Δ = 15°26'31" (RT)
T = 394.66'
L = 784.53'
R = 2910.92'
PC STA 423+99.87
PT STA 431+84.41

CURVE RW09U-1

PI STA 12+67.15
N 10,149,300.2709
E 3,122,236.6645
Δ = 17° 21' 33" (RT)
T = 267.15'
L = 530.21'
R = 1750.00'
PC STA 10+00.00
PT STA 15+30.21

HYDRAULIC DATA		
		100 YR
Q	CFS	7857
V	FT/SEC	0.65

DESIGN SPEED: 40 MPH
ADT: 21,800 (2040)
RFC:
URBAN - PRINCIPAL ARTERIAL
NBI: 14-246-0-0683-06-486

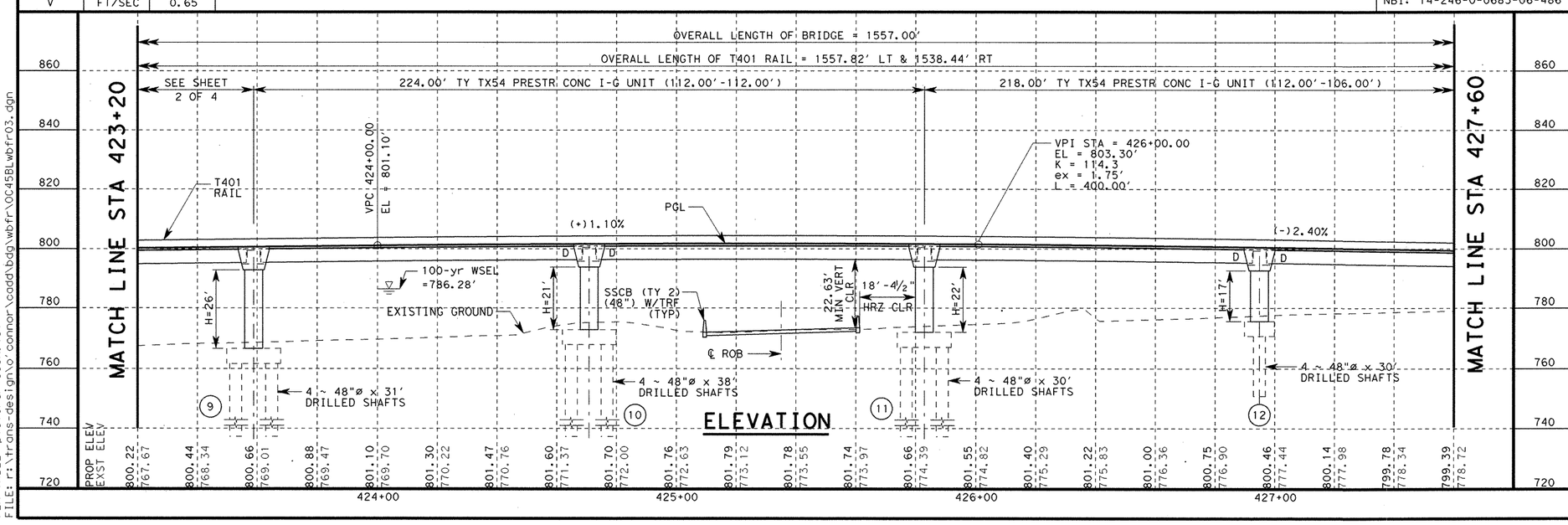

ELEVATION

HL-93
LOADING

STATE OF TEXAS
RAMKUMAR KOZHIKOTE
103166
LICENSED
PROFESSIONAL ENGINEER

Ramkumar Kozhikote 4/11/2011

REV. No.	DATE	REVISION	BY
△			
△			
△			

PBSJ
an Atkins company
TBPE REG. # F-474

Texas Department of Transportation
Austin District
©2011 by TxDOT

SH 45 / O'CONNOR DRIVE
WB FRONTAGE RD
BRIDGE LAYOUT

SCALE: 1"=40'H, 1"=40'V
SHEET 3 OF 4

DESIGNED: AMG	FED. RD DIV. No.	STATE	PROJECT No.		HIGHWAY No.	
CHECKED: AUS	6	TEXAS			LP 1/SH 45	
DRAWN: DW	STATE DISTRICT	COUNTY	CONTROL No.	SECTION No.	JOB No.	SHEET No.
CHECKED: AUS	AUSTIN	WILLIAMSON	0683	06	027	456

PLOT DRIVER: RD*11x17*PDF.plt
PEN TABLE: plotordr*ocon.tbl
FILE: r:\trans-design\o'connor\oadd\bdg\wbfr\OC45BLwbfr03.dgn
DATE: 4/11/2011 TIME: 10:38:09 AM

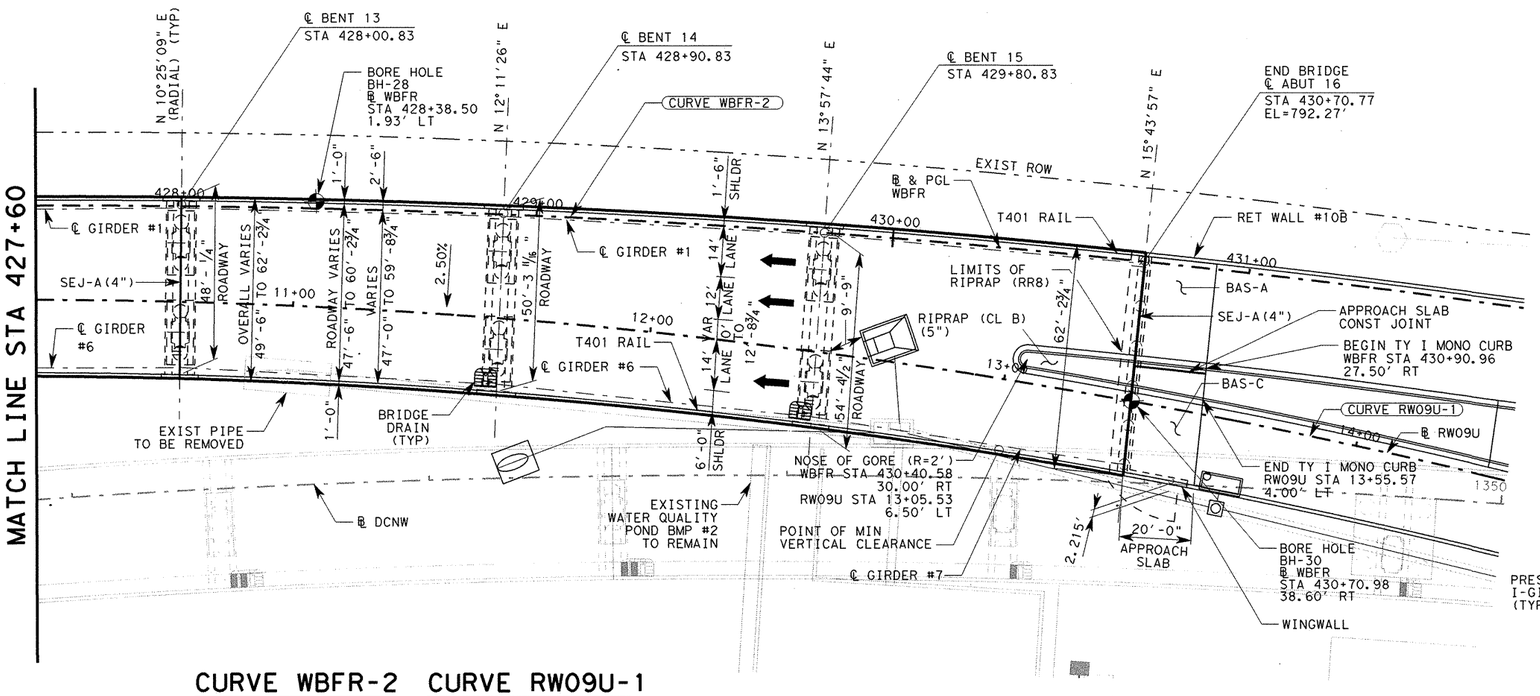

PLAN

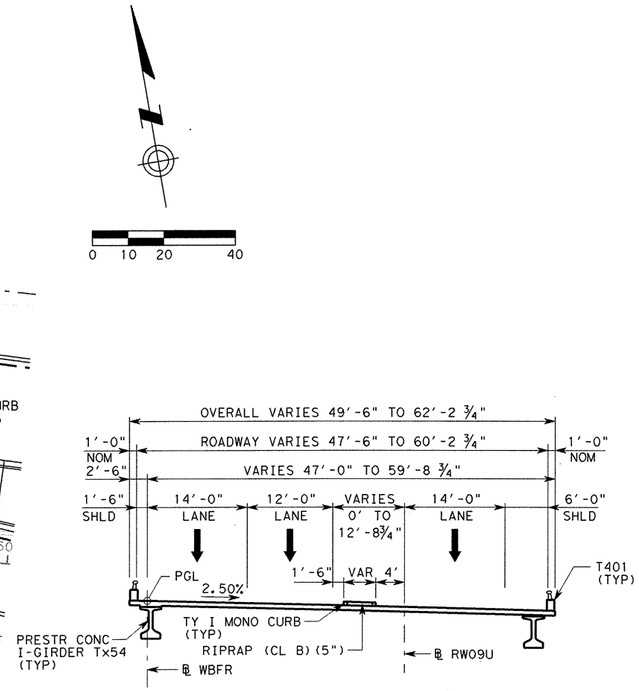

TYPICAL SECTION

(SPAN 12-15)
NTS

CURVE WBFR-2

PI STA 427+94.53
N 10,149,384.0833
E 3,122,041.2469
Δ = 15°26'31" (RT)
T = 394.66'
L = 784.53'
R = 2910.92'
PC STA 423+99.87
PT STA 431+84.41

CURVE RW09U-1

PI STA 12+67.15
N 10,149,300.2709
E 3,122,236.6645
Δ = 17° 21' 33" (RT)
T = 267.15'
L = 530.21'
R = 1750.00'
PC STA 10+00.00
PT STA 15+30.21

HYDRAULIC DATA		
		100 YR
Q	CFS	7857
V	FT/SEC	0.65

DESIGN SPEED: 40 MPH
ADT: 21,800 (2040)
RFC:
URBAN - PRINCIPAL ARTERIAL
NBI: 14-246-0-0683-06-486

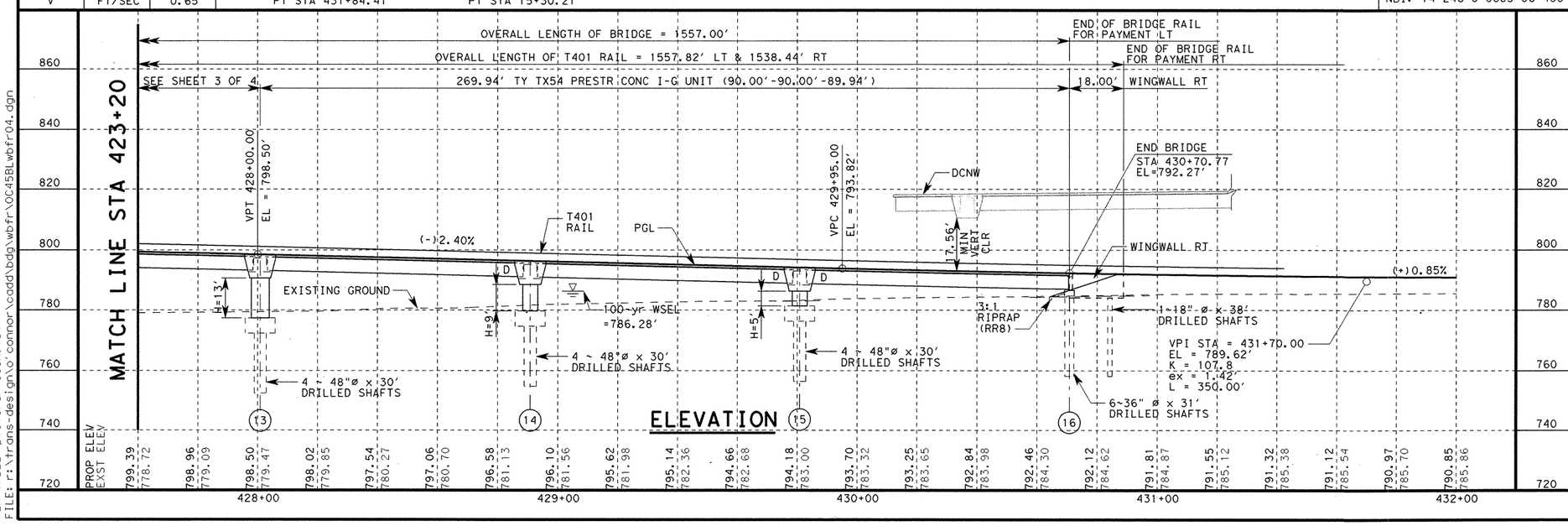

ELEVATION

HL-93 LOADING

STATE OF TEXAS
RAMKUMAR KOZHIKOTE
103166
LICENSED PROFESSIONAL ENGINEER
Ramkumar Kozhikote 4/11/2011

REV. No.	DATE	REVISION	BY
△			
△			
△			

PBSJ an Atkins company TBPE REG. # F-474

Texas Department of Transportation
Austin District
©2011 by TxDOT

SH 45 / O'CONNOR DRIVE WB FRONTAGE RD BRIDGE LAYOUT

SCALE: 1"=40'H, 1"=40'V SHEET 4 OF 4

DESIGNED: AMG	FED. RD DIV. No.	STATE	PROJECT No.			HIGHWAY No.	
CHECKED: AUS	6	TEXAS				LP 1/SH 45	
DRAWN: DW	STATE DISTRICT	COUNTY	CONTROL No.	SECTION No.	JOB No.	SHEET No.	
CHECKED: AUS	AUSTIN	WILLIAMSON	0683	06	027	457	

PLOT DRIVER: RD*11x17*PDF.plt
PEN TABLE: plotordr*ocon.tbl
FILE: r:\trans-design\o'connor\cadd\bdg\wbfr\OC45BLwbfr04.dgn
DATE: 4/11/2011 TIME: 10:38:14 AM

SUMMARY OF BRIDGE QUANTITIES

ITEM NO.	400	403	416	416	416	416	416	420	420	420	422	425	428	450	454	471	481	618
DESC. CODE	2001	2001	2001	2004	2078	2006	2079	2003	2017	2018	2003	2068	2001	2063	2001	2003	2012	2018
DESCRIPTION	STRUCT EXCAV	TEMP SPECIAL SHORING	DRILLED SHAFTS (18 IN)	DRILLED SHAFTS (36 IN)	DRILLED SHAFT CASINGS (36 IN.)	DRILLED SHAFTS (48 IN)	DRILLED SHAFT CASINGS (48 IN.)	CL C CONC (ABUT)	CL C CONC (BENT) (MASS)	CL C CONC (FOOTING) (MASS)	REINF CONC SLAB (CL S)	PRESTR CONC GIRDER (TX 54)	CONC SURF TREAT CLASS I	RAIL (TY T401)	SEALED EXP JOINT (4 IN)	GRATE & FRAME (BRIDGE DRAIN)	PVC PIPE (SCH 40) (6 IN)	CONDUIT (PVC) (SCH 40) (2 IN.)
	CY	SF	LF	LF	LF	LF	LF	CY	CY	CY	SF	LF	SY	LF	LF	EA	LF	LF
2 - ABUTMENTS			38	334	30			57.0						18			3	
14- INTERIOR BENTS	1200	7548				1764	70		1520.0	780.7							327	
1 - 367.50' PRESTR. CONC. I-G UNIT											15734	2123	1776	732	84	2		1464
1 - 308.62' PRESTR. CONC. I-G UNIT											13213	1758	1491	615	42	2		1230
1 - 168.9' PRESTR. CONC. I-G UNIT											7230	951	816	336	42	1		672
1 - 224.00' PRESTR. CONC. I-G UNIT											9573	1278	1081	445	42	1		890
1 - 218.00' PRESTR. CONC. I-G UNIT											10401	1242	1172	433	49	1		866
1 - 270.00' PRESTR. CONC. I-G UNIT											14662	1619	1649	536	61	3		1072
TOTALS	1200	7548	38	334	30	1764	70	57.0	1520.0	780.7	70813	8971	7985	3115	320	10	330	6194

BEARING SEAT ELEVATIONS

		Girder 1	Girder 2	Girder 3	Girder 4	Girder 5	Girder 6
ABUT 1	(FWD)	804.478	804.626	804.774	804.922	805.070	805.218
BENT 2	(BK)	799.705	799.853	800.002	800.150	800.298	800.446
	(FWD)	799.449	799.597	799.745	799.893	800.041	800.189
BENT 3	(BK)	795.130	795.278	795.427	795.575	795.723	795.871
	(FWD)	794.939	795.087	795.235	795.383	795.530	795.678
BENT 4	(BK)	792.341	792.489	792.637	792.785	792.933	793.081
	(FWD)	792.249	792.397	792.545	792.693	792.841	792.989
BENT 5	(BK)	791.478	791.626	791.774	791.922	792.070	792.218
	(FWD)	791.486	791.634	791.782	791.930	792.078	792.226
BENT 6	(BK)	791.910	792.058	792.206	792.354	792.502	792.650
	(FWD)	791.958	792.106	792.254	792.402	792.550	792.698
BENT 7	(BK)	793.100	793.248	793.396	793.544	793.692	793.840
	(FWD)	793.191	793.339	793.487	793.635	793.782	793.930
BENT 8	(BK)	794.043	794.103	794.163	794.223	794.282	794.342
	(FWD)	794.196	794.248	794.301	794.354	794.406	794.459

		Girder 1	Girder 2	Girder 3	Girder 4	Girder 5	Girder 6
BENT 9	(BK)	795.049	795.013	794.978	794.942	794.906	794.871
	(FWD)	795.097	795.054	795.012	794.969	794.926	794.883
BENT 10	(BK)	796.050	795.888	795.726	795.564	795.402	795.240
	(FWD)	796.080	795.911	795.742	795.572	795.403	794.234
BENT 11	(BK)	796.068	795.884	795.699	795.514	795.329	795.144
	(FWD)	796.058	795.872	795.686	795.500	795.314	795.128
BENT 12	(BK)	795.012	794.795	794.579	794.363	794.146	793.930
	(FWD)	794.835	794.617	794.399	794.182	793.964	793.746
BENT 13	(BK)	792.898	792.678	792.458	792.238	792.019	791.799
	(FWD)	792.767	792.546	792.325	792.105	791.884	791.663
BENT 14	(BK)	790.759	790.528	790.297	790.067	789.836	789.605
	(FWD)	790.607	790.375	790.142	789.910	789.677	789.445

		Girder 1	Girder 2	Girder 3	Girder 4	Girder 5	Girder 6	Girder 7
BENT 15	(BK)	788.599	788.348	788.097	787.846	787.596	787.345	
	(FWD)	788.364	788.153	787.942	787.731	787.520	787.309	787.098
ABUT 16	(BK)	786.565	786.331	786.098	785.864	785.630	785.396	785.162

Ramkumar Kozhikote
6/21/2011

STATE OF TEXAS
RAMKUMAR KOZHIKOTE
103166
LICENSED
PROFESSIONAL ENGINEER

HL-93
LOADING

REV. No.	DATE	REVISION	BY
△			
△			
△			

PBSJ
an Atkins company TBPE REG. # F-474

Texas Department of Transportation
Austin District
©2011 by TxDOT

SH 45 / O'CONNOR DRIVE WB FRONTAGE RD ESTIMATED QUANTITIES AND BEARING SEAT ELEVATIONS

SHEET 1 OF 1

DESIGNED: RBR	FED. RD DIV. No.	STATE	PROJECT No.			HIGHWAY No.	
CHECKED: OAS	6	TEXAS				LP 1/SH 45	
DRAWN: RBR	STATE DISTRICT	COUNTY	CONTROL No.	SECTION No.	JOB No.	SHEET No.	
CHECKED: OAS	AUSTIN	WILLIAMSON	0683	06	027	458	

Rev. 6/29/11

DATE: 6/21/2011 TIME: 10:44:37 AM
PLOT DRIVER: RD*11x17*PDF.plt
PEN TABLE: plotordr*ocon.tbl
FILE: r:\trans-design\o'connor\cadd\bdg\wbfr\0C458Owbfr.dgn

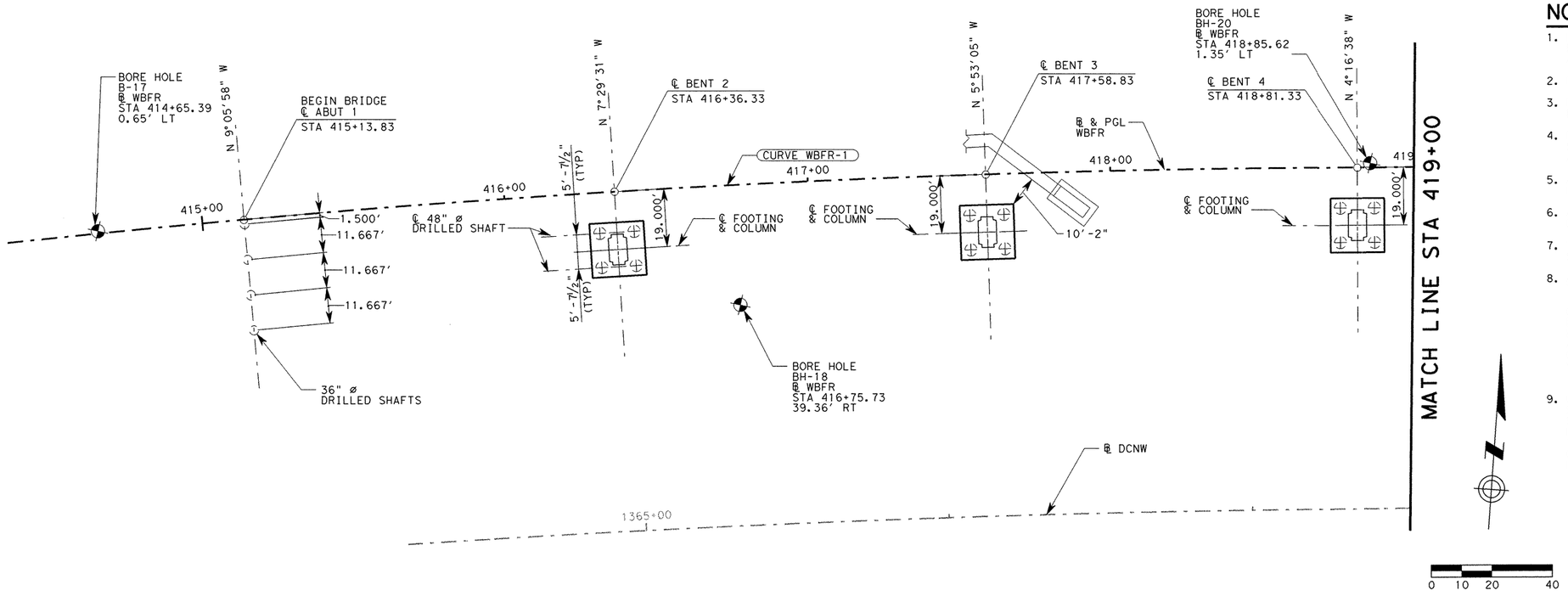

NOTES:

1. DESIGNED ACCORDING TO AASHTO LRFD BRIDGE DESIGN SPECIFICATIONS, 4TH EDITION 2007 AND CURRENT INTERIMS FOR HL-93 LOADING.
2. FOR BORING LOGS SEE "BORING LOGS" SHEETS.
3. FOR LENGTH OF DRILLED SHAFTS, SEE BRIDGE LAYOUTS.
4. FOR DRILL SHAFT LOADS AND DETAILS, SEE FOUNDATION DETAILS, EXCEPT FOR ABUTMENTS.
5. ALL BENTS ARE RADIAL TO CONTROL UNLESS OTHERWISE NOTED.
6. ALL DRILLED SHAFTS ARE 48" DIAMETER UNLESS OTHERWISE NOTED.
7. THE DRILLED SHAFT 28 DAY CONCRETE STRENGTH SHALL BE 3600 PSI
8. AFTER SHAFTS ARE DRILLED TO THE PLAN DEPTH, THE SHAFTS SHOULD BE PROBED TO A DEPTH OF 1.5 TIMES THE SHAFT DIAMETER OR TO A DEPTH OF 5 FT, WHICHEVER IS GREATER. IF VOIDS, EITHER OPEN OR CLAY-FILLED, ARE ENCOUNTERED, THE SHAFTS SHOULD BE ADVANCED BELOW THE VOID(S) AND RE-PROBED. CONTINUE PROBING AND ADVANCING UNTIL NO VOIDS ARE ENCOUNTERED WITHIN A DEPTH OF 1.5 DIAMETERS BELOW THE SHAFT BOTTOM.
9. WHEN SLOUGHING AND/OR GROUNDWATER SEEPAGE ARE ENCOUNTERED DURING DRILLED SHAFT INSTALLATION (I.E. SPOILS ARE RECORDED FROM THE DRILLING OPERATIONS) THE CONTRACTOR SHALL INSTALL PERMANENT CASING AS DIRECTED BY THE ENGINEER TO EXCLUDE THE GROUND WATER.

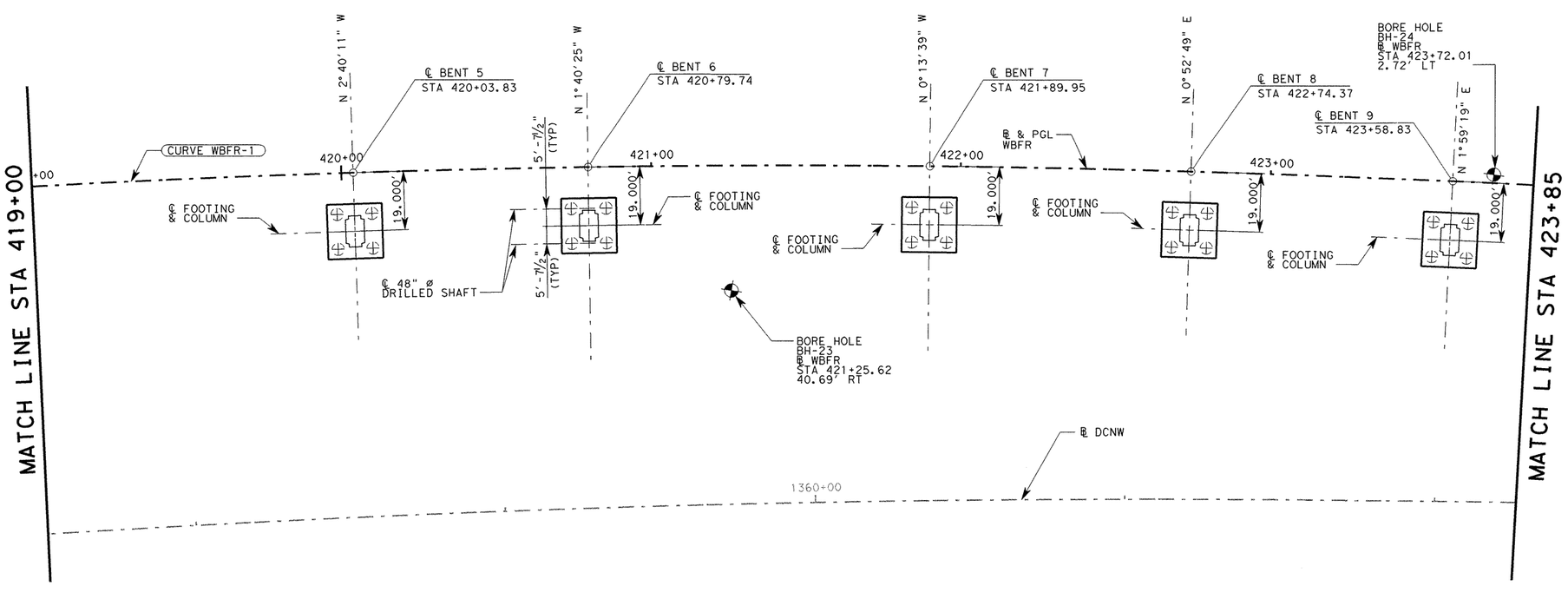

Ramkumar Kozhikote
June 2, 2011

STATE OF TEXAS
RAMKUMAR KOZHIKOTE
103166
LICENSED
PROFESSIONAL ENGINEER

HL-93
LOADING

REV. No.	DATE	REVISION	BY
△			
△			
△			

PBSJ
an Atkins company TBPE REG. # F-474

Texas Department of Transportation
Austin District
©2011 by TxDOT

SH 45 / O'CONNOR DRIVE
WB FRONTAGE RD
FOUNDATION LAYOUT

SCALE: 1"=40' SHEET 1 OF 2

DESIGNED: AMG	FED. RD DIV. No.	STATE	PROJECT No.			HIGHWAY No.
CHECKED: AUS	6	TEXAS				LP 1/SH 45
DRAWN: DW	STATE DISTRICT	COUNTY	CONTROL No.	SECTION No.	JOB No.	SHEET No.
CHECKED: AUS	AUSTIN	WILLIAMSON	0683	06	027	459

DATE: 6/2/2011 TIME: 2:16:22 PM
PLOT DRIVER: RD*11x17*PDF.plt
PEN TABLE: plotord*ocon.tbl
FILE: r:\trans-design\o'connor\cadd\bdg\wbfr\0C45FLwbfr01.dgn

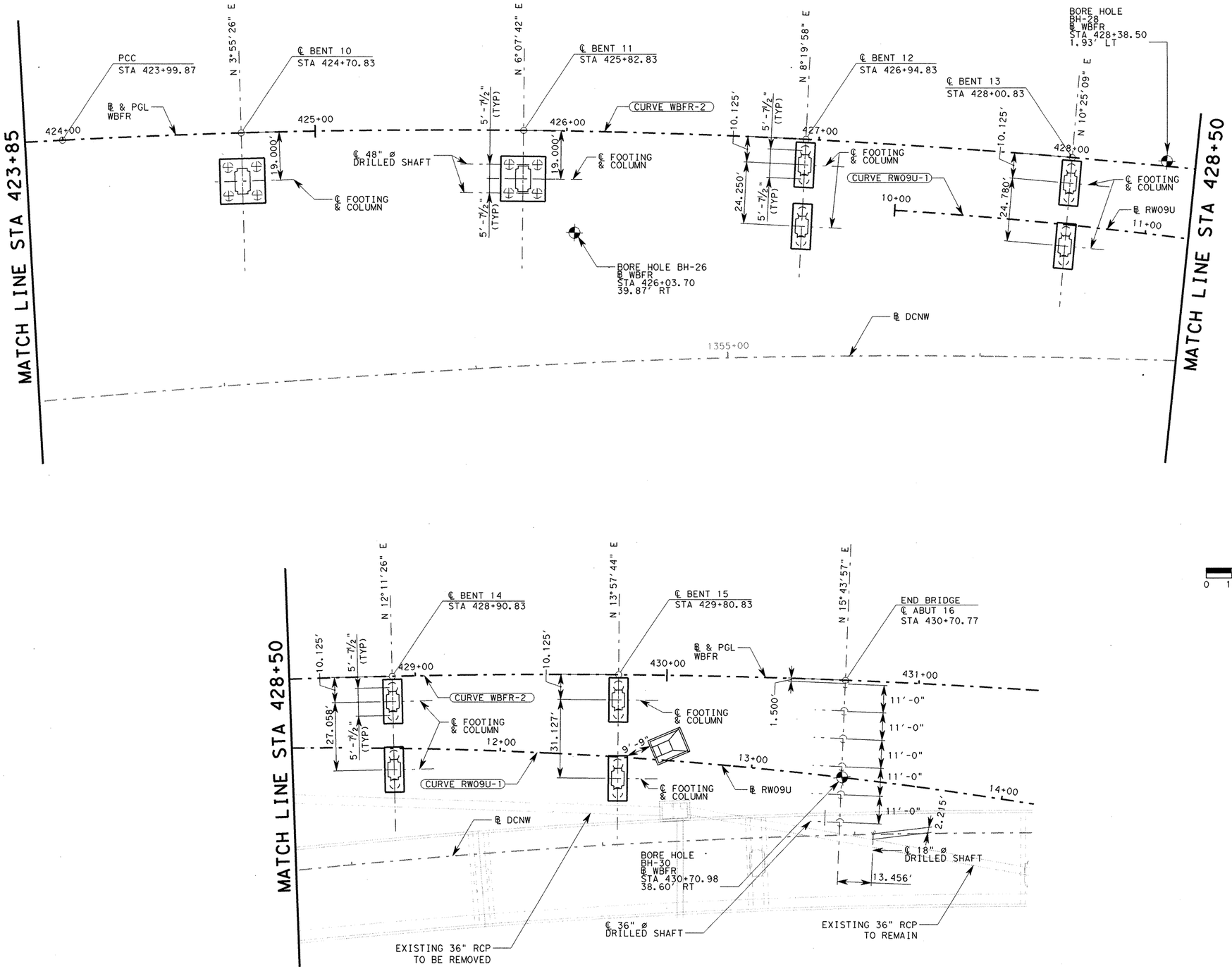

0 10 20 40

STATE OF TEXAS
RAMKUMAR KOZHIKOTE
103166
LICENSED
PROFESSIONAL ENGINEER

HL-93
LOADING

Ramkumar Kozhikote
4/11/2011

REV. No.	DATE	REVISION	BY
△			
△			
△			

PBSJ
an Atkins company
TBPE REG. # F-474

Texas Department of Transportation
Austin District
©2011 by TxDOT

SH 45 / O'CONNOR DRIVE
WB FRONTAGE RD
FOUNDATION LAYOUT

SCALE: 1"=40'

SHEET 2 OF 2

DESIGNED: AMG	FED. RD DIV. No.	STATE	PROJECT No.			HIGHWAY No.	
CHECKED: AUS	6	TEXAS				LP 1/SH 45	
DRAWN: DW	STATE DISTRICT	COUNTY	CONTROL No.	SECTION No.	JOB No.	SHEET No.	
CHECKED: AUS	AUSTIN	WILLIAMSON	0683	06	027	460	

DATE: 4/11/2011 TIME: 10:38:25 AM
PLOT DRIVER: RD*11x17*PDF.plt
PEN TABLE: plotordr*ocon.tbl
FILE: r:\trans-design\o'connor\cadd\bdg\wbfr\OC45FLwbfr02.dgn

DATE: 6/2/2011 TIME: 2:16:25 PM

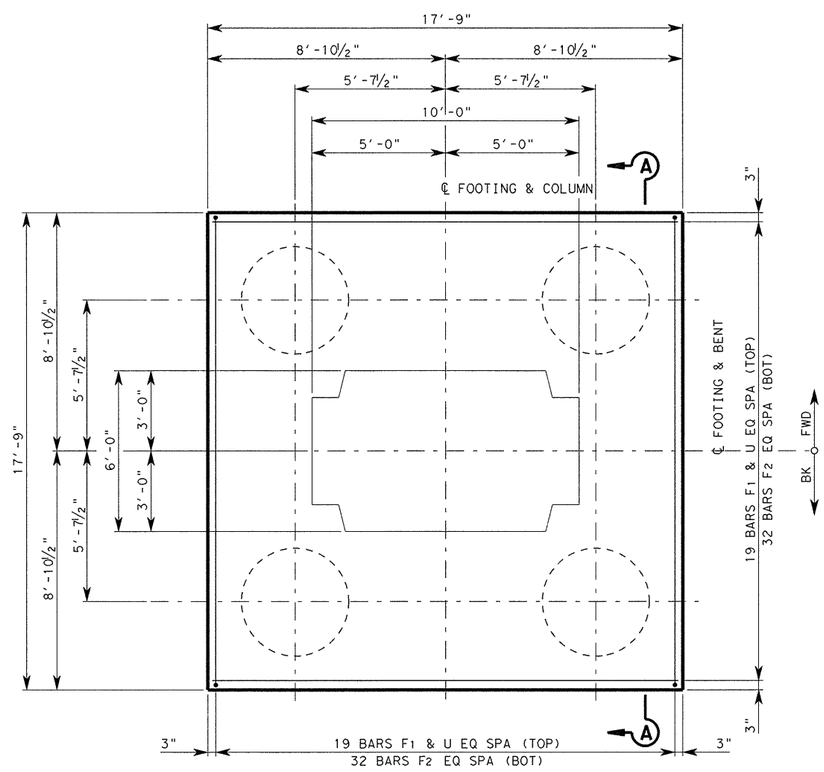

PLAN

ESTIMATED QUANTITIES

BENT NO	CLASS "C" (MASS) CONC (FOOTING) (CY)	STRUCT EXCAV (CY)	TEMP SPCL SHORING (SF)	DRILL SHAFT (48"ø) (LF)	CALCULATED DRILL SHAFT LOAD (EACH) (TONS)
2	58.3	87	474	140	500
3	58.3	87	474	148	500
4	58.3	87	474	120	500
5	58.3	87	474	120	550
6	58.3	87	474	120	550
7	58.3	87	474	120	550
8	58.3	87	474	120	500
9	58.3	87	474	124	500
10	58.3	87	474	152	500
11	58.3	87	474	120	500
TOTAL	583	870	4740	1284	

BILL OF REINFORCING STEEL (TYP EACH FOOTING)

	BAR	NO	SIZE	LENGTH	WEIGHT
	F_1	38	#8	17'-3"	1,750
	F_2	64	#11	17'-3"	5,866
	FD	52	#11	15'-5"	4,259
	T	16	#8	17'-3"	737
	U	76	#6	7'-1"	809
†	REINFORCING STEEL			LB	13,420

† FOR CONTRACTOR'S INFORMATION ONLY

NOTES:

1. DESIGNED ACCORDING TO AASHTO 2007 STANDARD AND INTERIM SPECIFICATIONS.
2. ALL DIMENSIONS TO THE REINFORCING STEEL ARE TO THE ℄ OF THE BAR UNLESS OTHERWISE NOTED.
3. SEE "FOUNDATION LAYOUT" FOR FOUNDATION LOCATION AND ORIENTATION.
4. SEE CORRESPONDING BENT SHEET FOR PLACEMENT OF BARS FD TO MATCH COLUMN REINFORCING.
5. SPECIAL SHORING SHALL BE USED AS NOTED WITH THE ABILITY TO POUR AGAINST EARTH. CONTRACTOR SHALL MAINTAIN 3" MINIMUM CLEAR COVER.

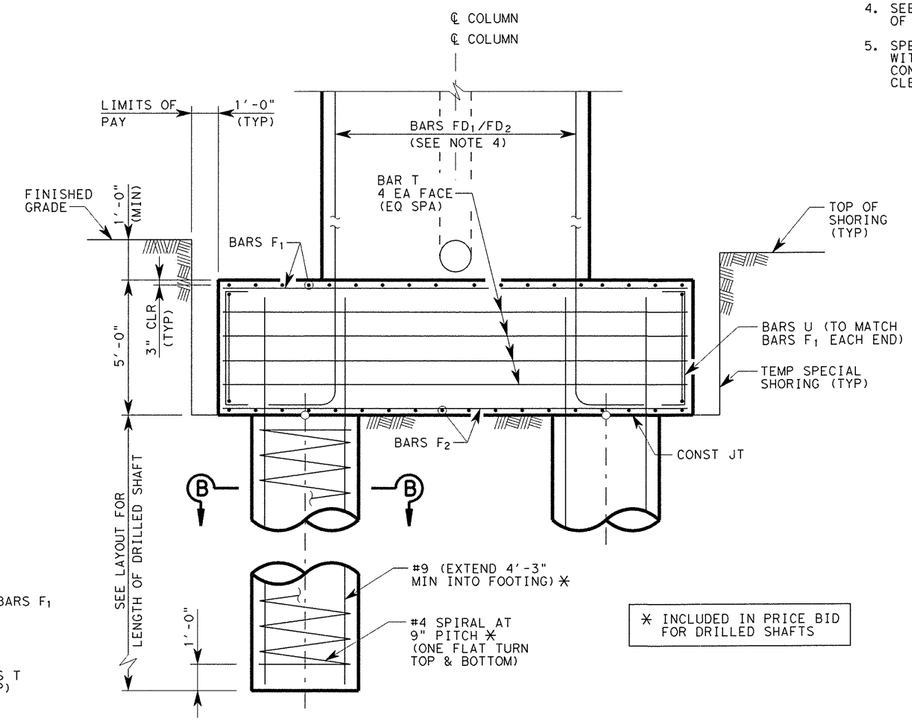

✳ INCLUDED IN PRICE BID FOR DRILLED SHAFTS

ELEVATION

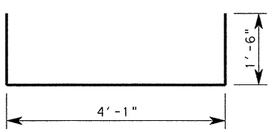

BARS U

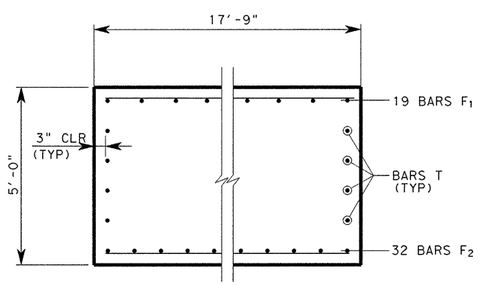

SECTION A-A

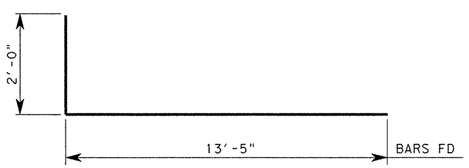

BARS FD

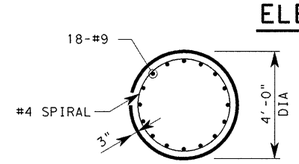

SECTION B-B

Ramkumar Kozhikote
June 2, 2011

STATE OF TEXAS
RAMKUMAR KOZHIKOTE
103166
LICENSED
PROFESSIONAL ENGINEER

HL-93 LOADING

REV. No.	DATE	REVISION	BY
△			
△			
△			

PBSJ an Atkins company TBPE REG. # F-474

Texas Department of Transportation Austin District

©2011 by TxDOT

SH 45 / O'CONNOR DRIVE WB FRONTAGE RD FOUNDATION DETAILS BENTS 2-11

SCALE: NTS SHEET 1 OF 2

DESIGNED: KD	FED. RD DIV. No.	STATE	PROJECT No.			HIGHWAY No.
CHECKED: OAS	6	TEXAS				LP 1/SH 45
DRAWN: DEW	STATE DISTRICT	COUNTY	CONTROL No.	SECTION No.	JOB No.	SHEET No.
CHECKED: OAS	AUSTIN	WILLIAMSON	0683	06	027	461

PLOT DRIVER: RD+11x17*PDF.plt
PEN TABLE: plotordr*ocon.tbl
FILE: r:\trans-design\o'connor\cadd\bdg\wbfr\OC45FDwbfr01.dgn

DATE: 6/2/2011 TIME: 2:16:26 PM

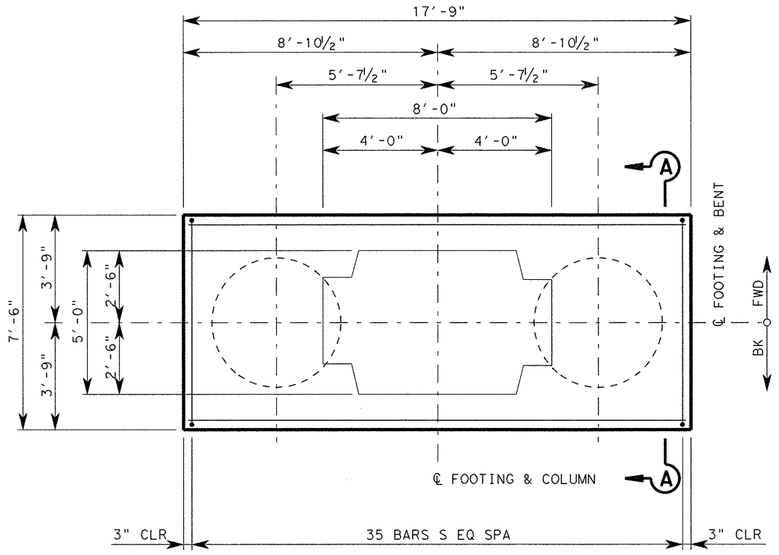

PLAN

ESTIMATED QUANTITIES / FOOTING

COL NO	CLASS "C" (MASS) CONC (FOOTING) (CY)	STRUCT EXCAV (CY)	TEMP SPCL SHORING (SF)	DRILL SHAFT (48"ø) (LF)	CALCULATED DRILL SHAFT LOAD (EACH) (TONS)
12/1 OR 12/2	24.7	42.00	351.0	60	450
13/1 OR 13/2	24.7	42.00	351.0	60	450
14/1 OR 14/2	24.7	42.00	351.0	60	350
15/1 OR 15/2	24.7	42.00	351.0	60	350

FOUNDATIONS #12 & #13 BILL OF REINFORCING STEEL (TYP EACH FOOTING)

BAR	NO	SIZE	LENGTH	WEIGHT
F_1	8	#8	17'-3"	368
F_2	13	#11	17'-3"	1,191
FD	40	#11	15'-5"	3,276
T	10	#8	17'-3"	461
S	35	#6	23'-8"	1,244
U_1	10	#6	9'-10"	147
U_2	16	#6	6'-4"	152
† REINFORCING STEEL			LB	6,839

† FOR CONTRACTOR'S INFORMATION ONLY

FOUNDATION #14 BILL OF REINFORCING STEEL (TYP EACH FOOTING)

BAR	NO	SIZE	LENGTH	WEIGHT
F_1	8	#8	17'-3"	368
F_2	9 13	#11	17'-3"	1,191
FD_1	16	#11	17'-0"	1,445
FD_2	24	#11	20'-9"	2,646
T	10	#8	17'-3"	461
S	35	#6	23'-8"	1,244
U_1	10	#6	9'-10"	147
U_2	16	#6	6'-4"	152
† REINFORCING STEEL			LB	7,654

† FOR CONTRACTOR'S INFORMATION ONLY

FOUNDATION #15 BILL OF REINFORCING STEEL (TYP EACH FOOTING)

BAR	NO	SIZE	LENGTH	WEIGHT
F_1	8	#8	17'-3"	368
F_2	13	#11	17'-3"	1,191
FD_1	16	#11	13'-0"	1,105
FD_2	24	#11	16'-9"	2,136
T	10	#8	17'-3"	461
S	35	#6	23'-8"	1,244
U_1	10	#6	9'-10"	147
U_2	16	#6	6'-4"	152
† REINFORCING STEEL			LB	6,804

† FOR CONTRACTOR'S INFORMATION ONLY

NOTES:

1. DESIGNED ACCORDING TO AASHTO LRFD BRIDGE DESIGN SPECIFICATIONS, 4TH EDITION, 2007 AND 2009 CURRENT INTERIMS FOR HL-93 LOADING.
2. ALL DIMENSIONS TO THE REINFORCING STEEL ARE TO THE ℄ OF THE BAR UNLESS OTHERWISE NOTED.
3. SEE "FOUNDATION LAYOUT" FOR FOUNDATION LOCATION AND ORIENTATION.
4. SEE CORRESPONDING BENT SHEET FOR PLACEMENT OF BARS FD TO MATCH COLUMN REINFORCING.
5. SPECIAL SHORING SHALL BE USED AS NOTED WITH THE ABILITY TO POUR AGAINST EARTH. CONTRACTOR SHALL MAINTAIN 3" MINIMUM CLEAR COVER.

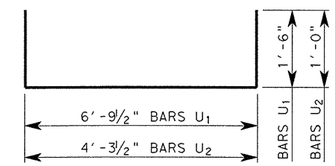

BARS U

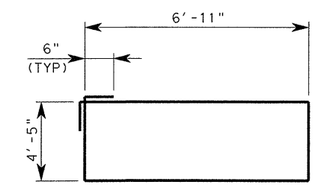

BARS S

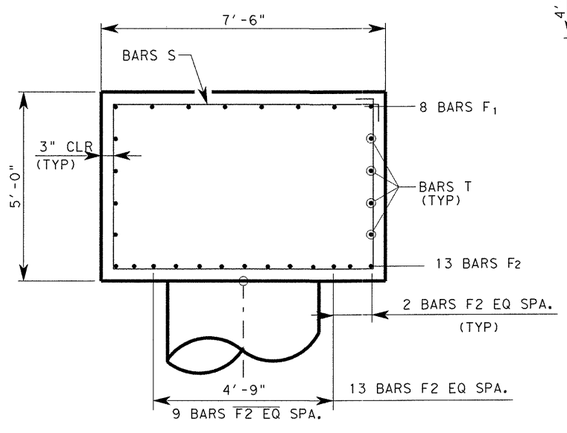

SECTION A-A

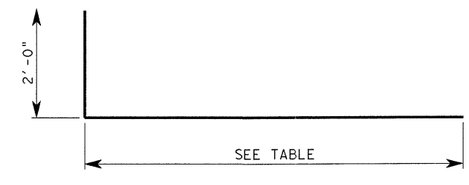

BARS FD/FD1/FD2

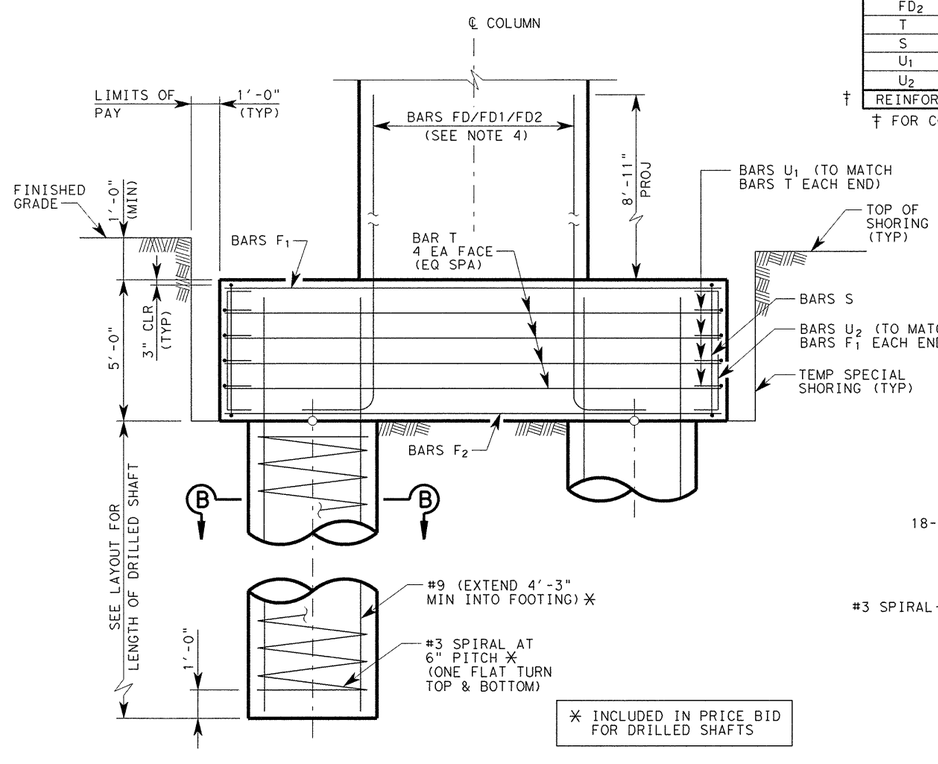

✳ INCLUDED IN PRICE BID FOR DRILLED SHAFTS

ELEVATION

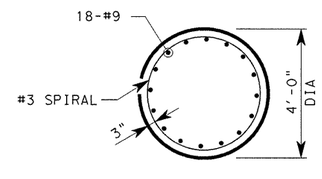

SECTION B-B

Ramkumar Kozhikote
June 2, 2011

STATE OF TEXAS
RAMKUMAR KOZHIKOTE
103166
LICENSED
PROFESSIONAL ENGINEER

HL-93 LOADING

REV. No.	DATE	REVISION	BY
△			
△			
△			

PBSJ an Atkins company TBPE REG. # F-474

Texas Department of Transportation Austin District

©2011 by TxDOT

SH 45 / O'CONNOR DRIVE WB FRONTAGE RD FOUNDATION DETAILS BENTS 12 - 15

SCALE: NTS SHEET 2 OF 2

DESIGNED: RBR	FED. RD DIV. No.	STATE	PROJECT No.			HIGHWAY No.	
CHECKED: OAS	6	TEXAS				LP 1/SH 45	
DRAWN: RBR	STATE DISTRICT	COUNTY	CONTROL No.	SECTION No.	JOB No.	SHEET No.	
CHECKED: OAS	AUSTIN	WILLIAMSON	0683	06	027	462	

PLOT DRIVER: RD*11x17*PDF.plt
PEN TABLE: plotordr*ocon.tbl
FILE: r:\trans-design\o'connor\oadd\bdg\wbfr\0C45FDwbfr02.dgn

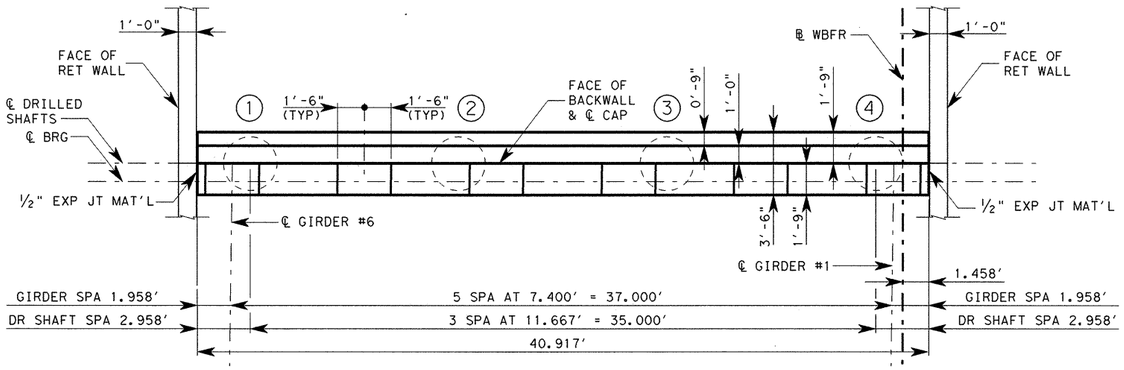

PLAN

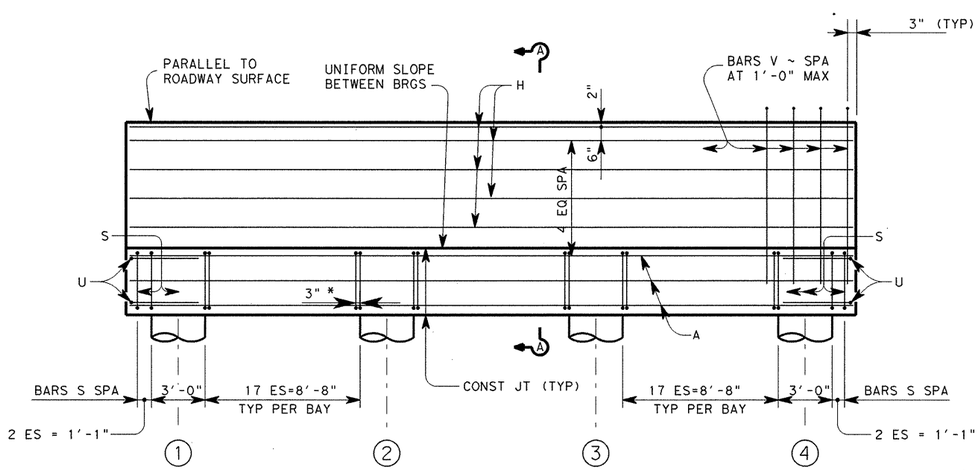

* TYPICAL AT EACH FACE OF DRILLED SHAFT

ELEVATION

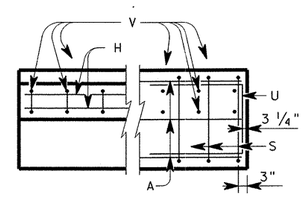

BACKWALL CAP

CORNER DETAILS

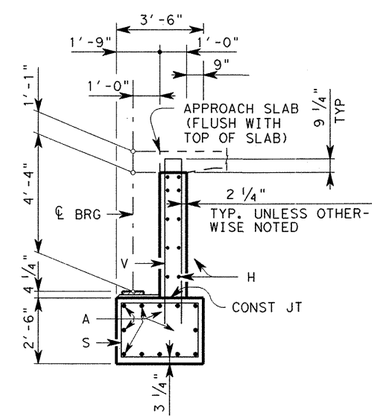

SECTION A-A

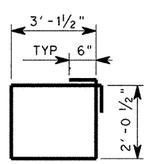

BARS S

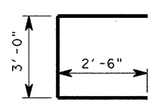

BARS U

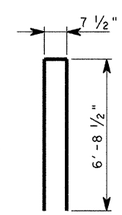

BARS V

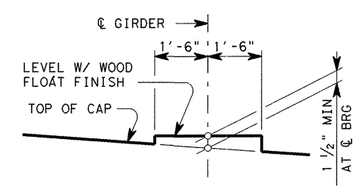

BEARING SEAT DETAIL

(BEARING SURFACE SHALL BE CLEAN AND FREE OF ALL LOOSE MATERIAL BEFORE PLACING BEARING PAD.)

TABLE OF ESTIMATED QUANTITIES

(REINFORCING QUANTITITES SHOWN FOR CONTRACTOR'S INFORMATION ONLY)

BAR	NO.	SIZE	LENGTH	WEIGHT
A	12	#11	40'- 5"	2,577
H	10	#5	40'- 5"	422
S	66	#5	11'- 4"	780
U	4	#6	8'- 0"	48
V	42	#5	14'- 0 ½"	615
REINFORCING STEEL			LB	4,442
CLASS "C" CONCRETE			CY	20.4

GENERAL NOTES:

1. DESIGNED ACCORDING TO AASHTO LRFD BRIDGE DESIGN SPECIFICAITONS 4TH EDITION AND CURRENT INTERIM SPECIFICATIONS FOR HL-93 LOADING.
2. CONCRETE STRENGTH SHALL BE F'C = 3,600 PSI.
3. ALL REINFORCING STEEL SHALL BE GRADE 60.
4. CAP DRILLED SHAFTS = 200 TONS/DRILLED SHAFT
5. SEE FOUNDATION DETAIL STANDARD SHEET, FD, FOR ALL FOUNDATION DETAILS AND NOTES.
6. SEE SEJ STANDARD SHEET FOR DETAILS AND LENGTH OF SEJ TO BE PLACED WITH ABUTMENT.

STATE OF TEXAS
RAMKUMAR KOZHIKOTE
103166
LICENSED PROFESSIONAL ENGINEER

Ramkumar Kozhikote
4/11/2011

HL-93 LOADING

REV. No.	DATE	REVISION	BY
△			
△			
△			

PBSJ
an Atkins company
TBPE REG. # F-474

Texas Department of Transportation
Austin District
©2011 by TxDOT

SH 45 / O'CONNOR DRIVE WB FRONTAGE RD ABUTMENT 1

SCALE: NTS

SHEET 1 OF 2

DESIGNED: RBR	FED. RD DIV. No.	STATE	PROJECT No.			HIGHWAY No.
CHECKED: OAS	6	TEXAS				LP 1/SH 45
DRAWN: RBR	STATE DISTRICT	COUNTY	CONTROL No.	SECTION No.	JOB No.	SHEET No.
CHECKED: OAS	AUSTIN	WILLIAMSON	0683	06	027	463

DATE: 4/11/2011 TIME: 10:38:30 AM
PLOT DRIVER: RD*11x17*PDF.plt
PEN TABLE: plotordr*ocon.tbl
FILE: r:\trans-design\o'connor\cadd\bdg\wbfr\0C45ABwbfr01.dgn

DATE: 6/2/2011 TIME: 2:33:04 PM

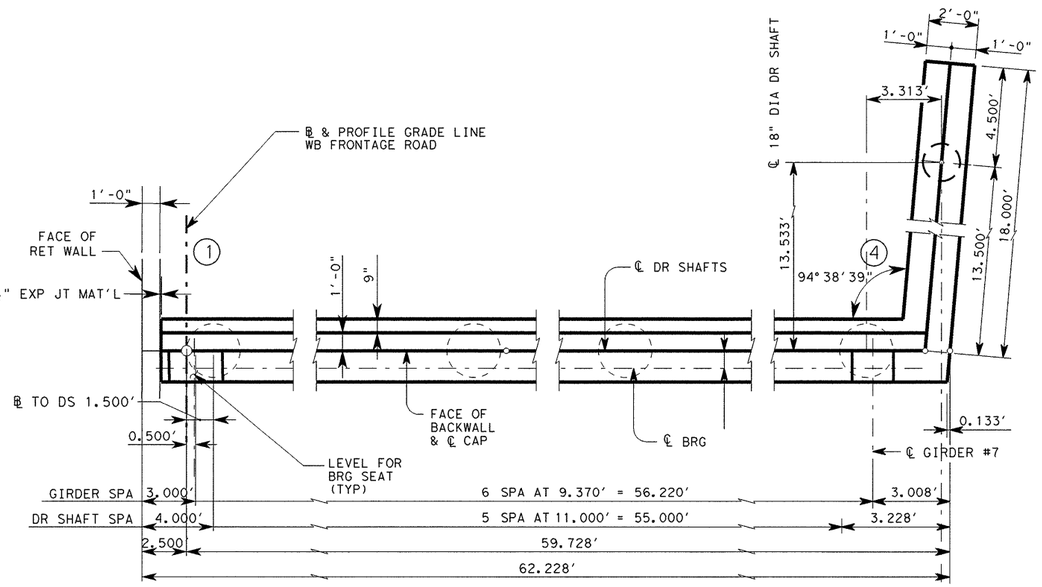

PLAN

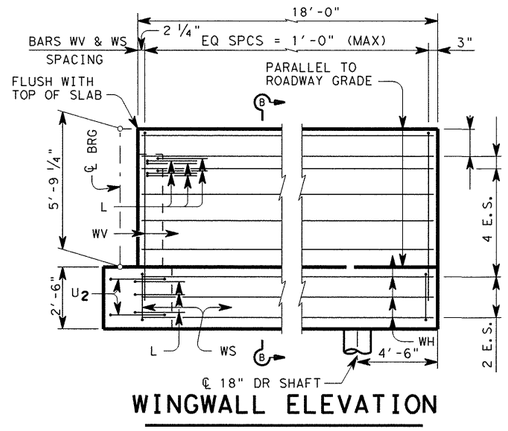

WINGWALL ELEVATION

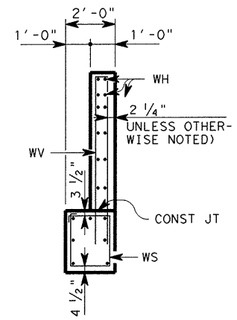

SECTION B-B

TABLE OF ESTIMATED QUANTITIES (REINFORCING QUANTITITES SHOWN FOR CONTRACTOR'S INFORMATION ONLY)				
BAR	NO.	SIZE	LENGTH	
A	12	#11	60'-3"	3841
H	10	#5	60'-3"	628
L1	9	#6	4'-0"	54
S	105	#5	11'-4"	1241
U1	4	#6	8'-0"	48
U2	4	#6	8'-0.5"	48
V	61	#5	14'-0.5"	893
WH	19	#6	17'-8"	504
WS	19	#4	7'-9"	98
WV	19	#5	14'-3.5"	283
REINFORCING STEEL				7640
CLASS "C" CONCRETE				36.7

GENERAL NOTES:

1. DESIGNED ACCORDING TO AASHTO LRFD BRIDGE DESIGN SPECIFICAITONS 4TH EDITION AND CURRENT INTERIM SPECIFICATIONS FOR HL-93 LOADING.
2. CONCRETE STRENGTH SHALL BE F'C = 3,600 PSI.
3. ALL REINFORCING STEEL SHALL BE GRADE 60.
4. CAP DRILLED SHAFTS = 200 TONS/DRILLED SHAFT
5. SEE FOUNDATION DETAIL STANDARD SHEET, FD, FOR ALL FOUNDATION DETAILS AND NOTES.
6. SEE SEJ STANDARD SHEET FOR DETAILS AND LENGTH OF SEJ TO BE PLACED WITH ABUTMENT.

Ramkumar Kozhikote
June 2, 2011

STATE OF TEXAS
RAMKUMAR KOZHIKOTE
103166
LICENSED
PROFESSIONAL ENGINEER

HL-93
LOADING

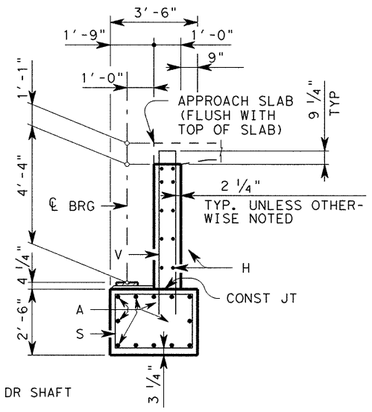

SECTION A-A

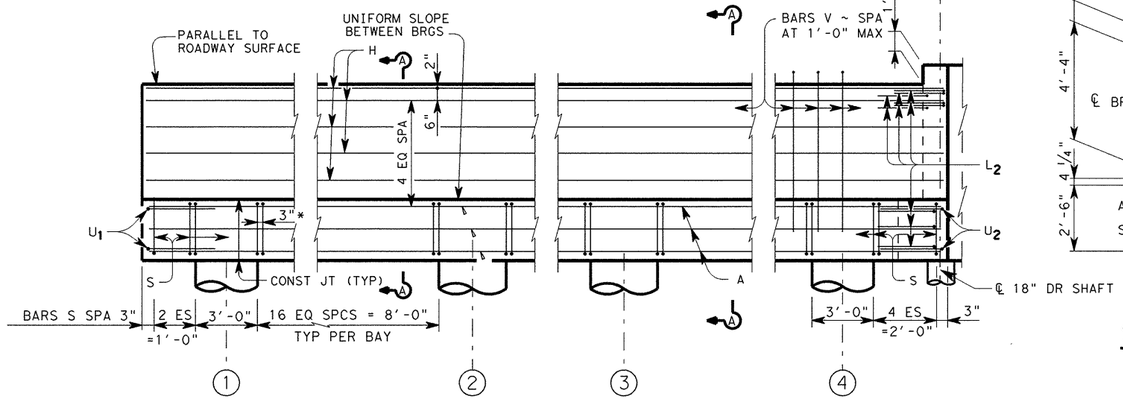

ELEVATION

* TYPICAL AT EACH FACE OF DRILLED SHAFTS

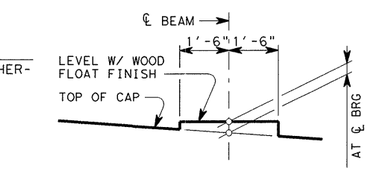

BEARING SEAT DETAIL

(BEARING SURFACE SHALL BE CLEAN AND FREE OF ALL LOOSE MATERIAL BEFORE PLACING BEARING PAD.)

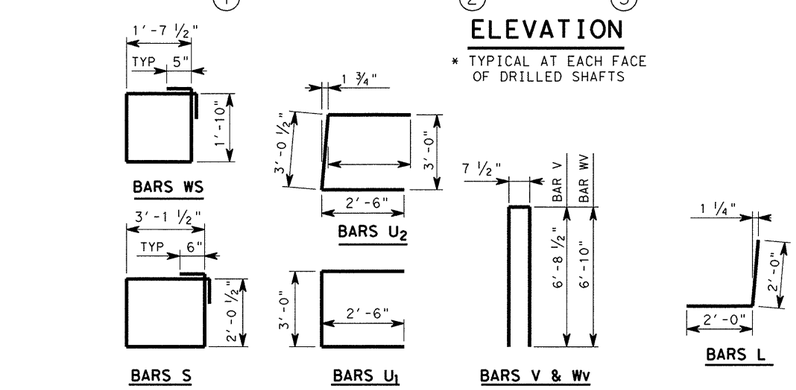

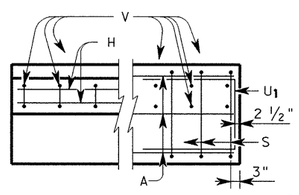

CORNER DETAILS

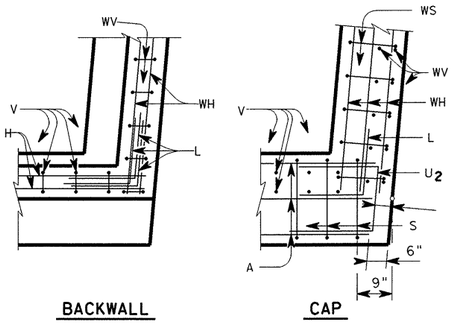

SKEWED CORNER DETAILS

REV. NO.	DATE	REVISION	BY
△			
△			
△			

PBSJ an Atkins company TBPE REG. # F-474

Texas Department of Transportation
Austin District
©2011 by TxDOT

SH 45 / O'CONNOR DRIVE
WB FRONTAGE ROAD
ABUTMENT 16

SCALE: 1"=1' SHEET 2 OF 2

DESIGNED: JFT	FED. RD DIV. No.	STATE	PROJECT No.			HIGHWAY No.
CHECKED: DWS	6	TEXAS				LP 1/SH 45
DRAWN: TF	STATE DISTRICT	COUNTY	CONTROL No.	SECTION No.	JOB No.	SHEET No.
CHECKED: JFT	AUSTIN	WILLIAMSON	0683	06	027	464

PLOT DRIVER: RD*11x17*PDF.plt
PEN TABLE: plotordr*ocon.tbl
FILE: r:\trans-design\o'connor\caddd\bdg\wbfr\OC45ABwbfr02.dgn

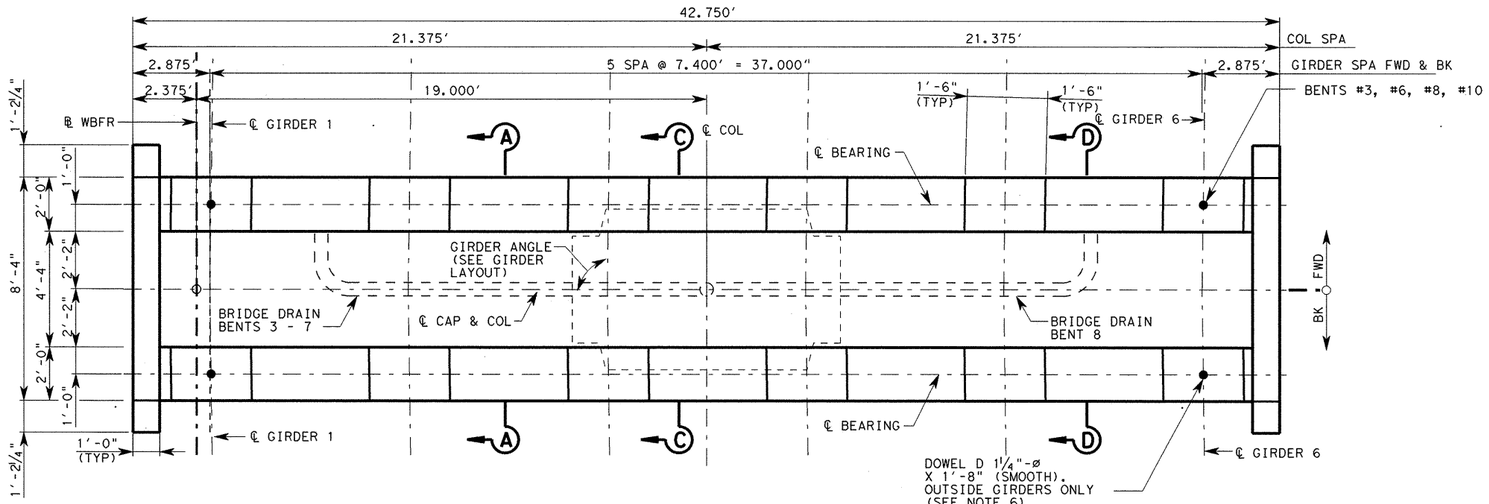

PLAN

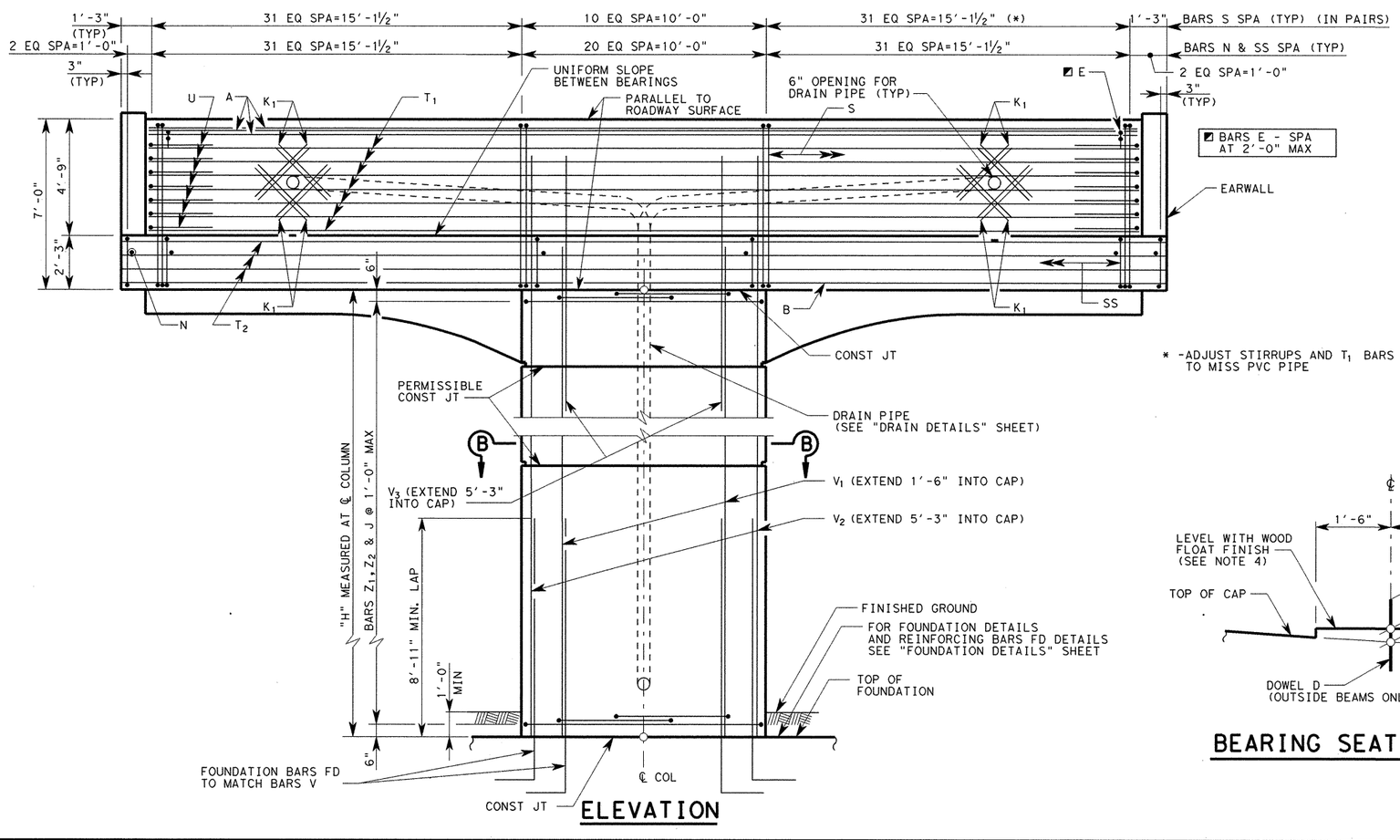

ELEVATION

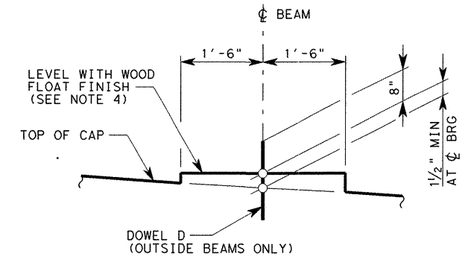

BEARING SEAT ELEVATION

NOTES:

1. DESIGNED ACCORDING TO AASHTO LRFD BRIDGE SPECIFICATIONS, 4TH EDITION 2007 AND 2009 CURRENT INTERIMS FOR HL-93 LOADING.
2. CONCRETE STRENGTH F'C=3600 PSI.
3. ALL REINFORCING SHALL BE GRADE 60.
4. BEARING SURFACE SHALL BE CLEAN AND FREE OF ALL LOOSE MATERIAL BEFORE PLACING BEARING PAD.
5. SEE "AESTHETIC TREATMENT REINFORCEMENT DETAILS" SHEET FOR AESTHETIC TREATMENT REINFORCEMENT DETAILS AND DIMENSIONS.
6. FOR DOWEL LOCATIONS SEE BRIDGE LAYOUT SHEETS.

STATE OF TEXAS
RAMKUMAR KOZHIKOTE
103166
LICENSED PROFESSIONAL ENGINEER

Ramkumar Kozhikote 4/11/2011

HL-93 LOADING

REV. No.	DATE	REVISION	BY
△			
△			
△			

PBSJ an Atkins company TBPE REG. # F-474

Texas Department of Transportation Austin District
©2011 by TxDOT

SH 45 / O'CONNOR DRIVE WB FRONTAGE RD BENTS 2 - 11

SCALE: NTS

SHEET 1 OF 9

DESIGNED: KD	FED. RD DIV. No.	STATE	PROJECT No.			HIGHWAY No.	
CHECKED: OAS	6	TEXAS				LP 1/SH 45	
DRAWN: DEW	STATE DISTRICT	COUNTY	CONTROL No.	SECTION No.	JOB No.	SHEET No.	
CHECKED: OAS	AUSTIN	WILLIAMSON	0683	06	027	465	

DATE: 4/11/2011 TIME: 10:38:34 AM

PLOT DRIVER: RD*11x17*PDF.plt
PEN TABLE: plotordr*ocon.tbl
FILE: r:\trans-design\o'connor\cadd\bdg\wbfr\OC45BTwbfr01.dgn

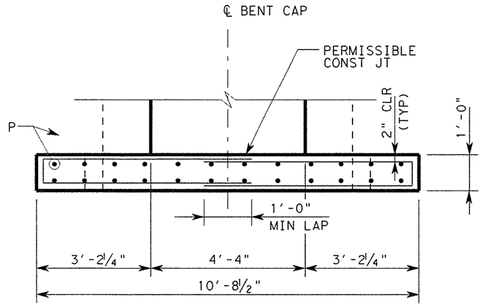

PLAN

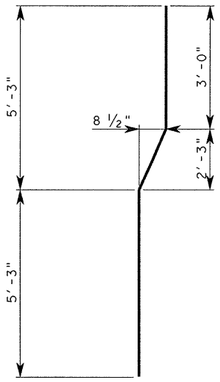

BARS V3

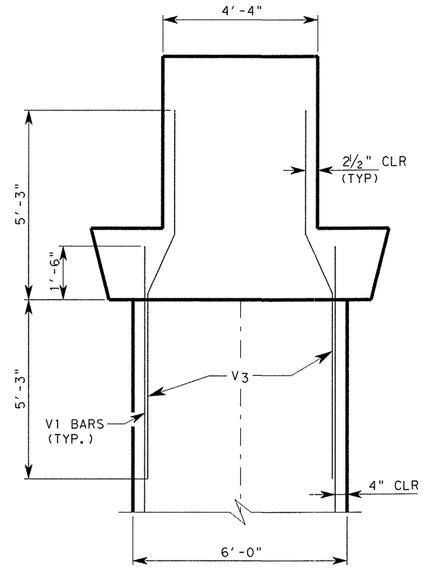

SECTION C-C

(CAP REINFORCEMENT NOT SHOWN FOR CLARITY)

TABLE OF ESTIMATED QUANTITIES (BENT CAP)

BAR	NO.	SIZE	LENGTH	WEIGHT
A	31	#11	40'-5"	6,657
B	10	#9	42'-5"	1,442
D**	4	1 ¼"ø	1'-8"	28
E	22	#5	4'-8"	107
K1	16	#6	3'-0"	72
N	87	#5	7'-5"	673
P	48	#5	6'-1"	305
R	24	#4	12'-0"	192
S	146	#6	20'-2"	4,422
SS	87	#6	20'-2"	2,635
T1	14	#6	40'-5"	850
T2	8	#6	42'-5"	510
U	14	#6	8'-10"	186
TOTAL REINFORCING STEEL *			LB	18,079
CLASS "C" (MASS) CONC (BENT)			CY	62.3

* FOR CONTRACTOR'S INFORMATION ONLY
** NO. OF D BARS: 2 FOR PIERS 2,5
4 FOR PIERS 3,6,8,10
NONE FOR PIERS 4,7,9
ADJUST REINFORCING QUANTITIES ACCORDINGLY

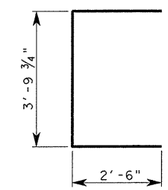

BARS U

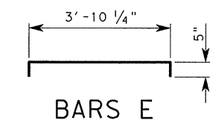

BARS E

** ADJUST T_1 BARS TO MISS PVC PIPE

Ramkumar Kozhikote
June 2, 2011

STATE OF TEXAS
RAMKUMAR KOZHIKOTE
103166
LICENSED
PROFESSIONAL ENGINEER

HL-93 LOADING

* VARIES DEPENDING ON ROADWAY GRADE, 4" MIN AT ℄ BEARING ON LOW SIDE.

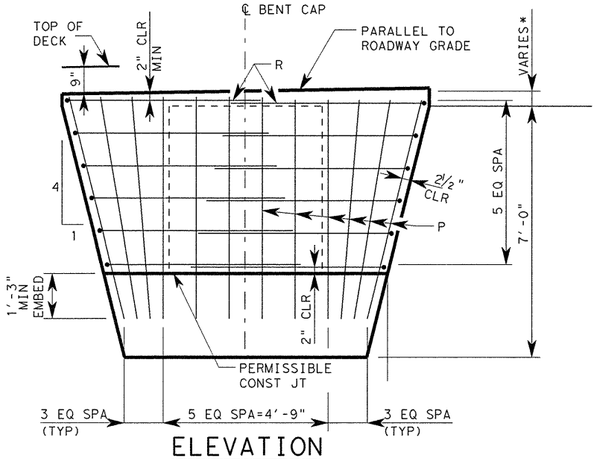

ELEVATION
EARWALL DETAIL

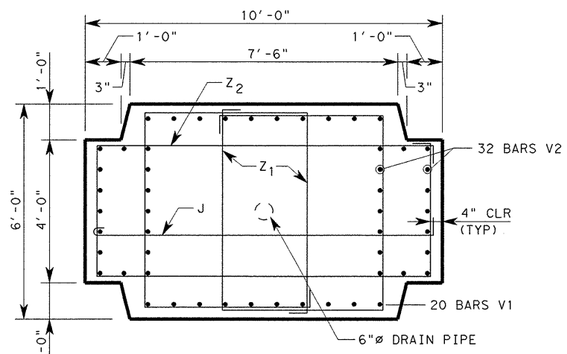

SECTION B-B

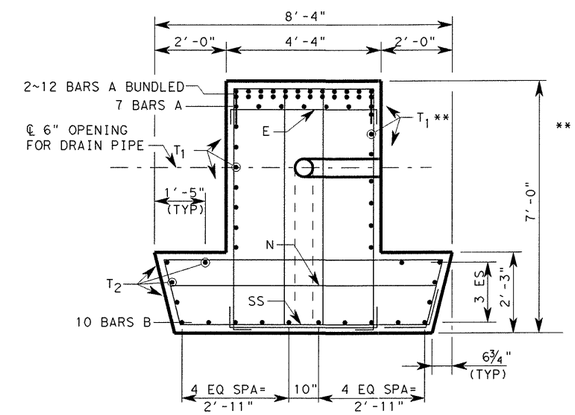

SECTION D-D

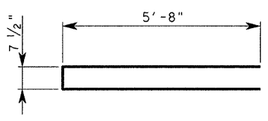

BARS R

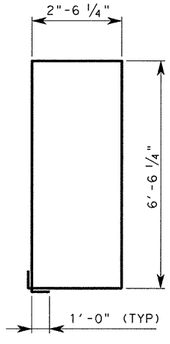

BARS S

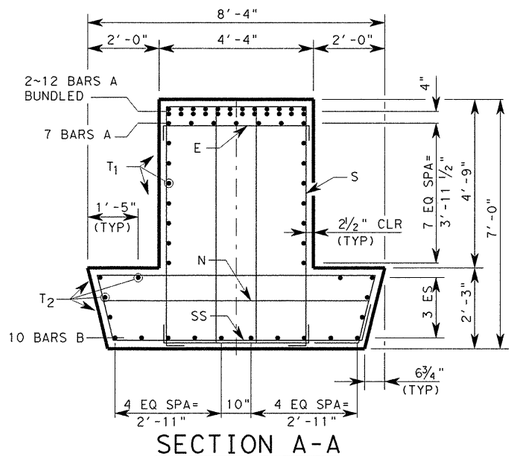

SECTION A-A

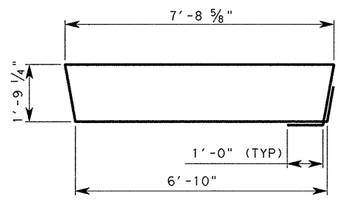

BARS SS

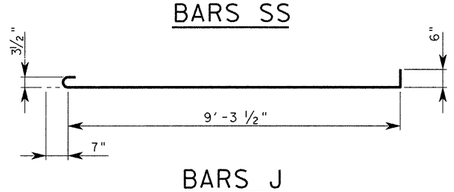

BARS J

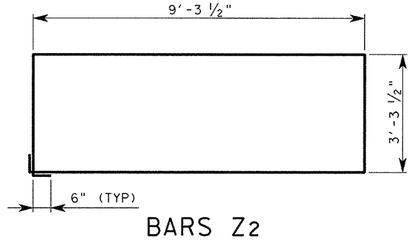

BARS Z2

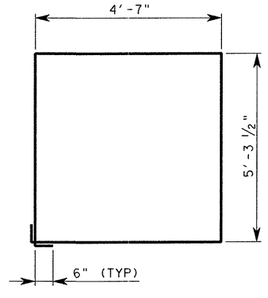

BARS Z1

REV. No.	DATE	REVISION	BY
△			
△			
△			

PBSJ an Atkins company TBPE REG. # F-474

Texas Department of Transportation
Austin District
©2011 by TxDOT

SH 45 / O'CONNOR DRIVE WB FRONTAGE RD BENTS 2 - 11

SCALE: NTS — SHEET 2 OF 9

DESIGNED: KD	FED. RD DIV. No.	STATE	PROJECT No.			HIGHWAY No.	
CHECKED: OAS	6	TEXAS				LP 1/SH 45	
DRAWN: DEW	STATE DISTRICT	COUNTY	CONTROL No.	SECTION No.	JOB No.	SHEET No.	
CHECKED: OAS	AUSTIN	WILLIAMSON	0683	06	027	466	

PLOT DRIVER: RD*11x17*PDF.plt
PEN TABLE: plotordr*ocon.tbl
FILE: r:\trans-design\o'connor\cadd\bdg\wbfr\0C45BTwbfr02.dgn
DATE: 6/2/2011 TIME: 2:16:31 PM

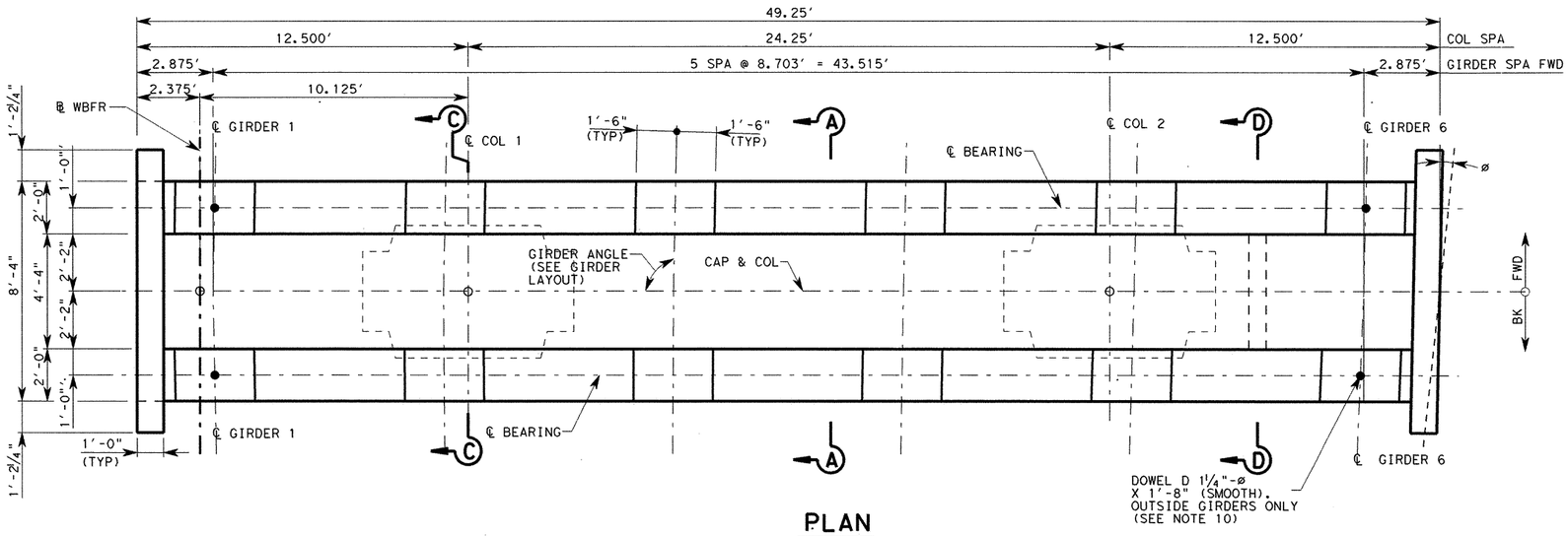

PLAN

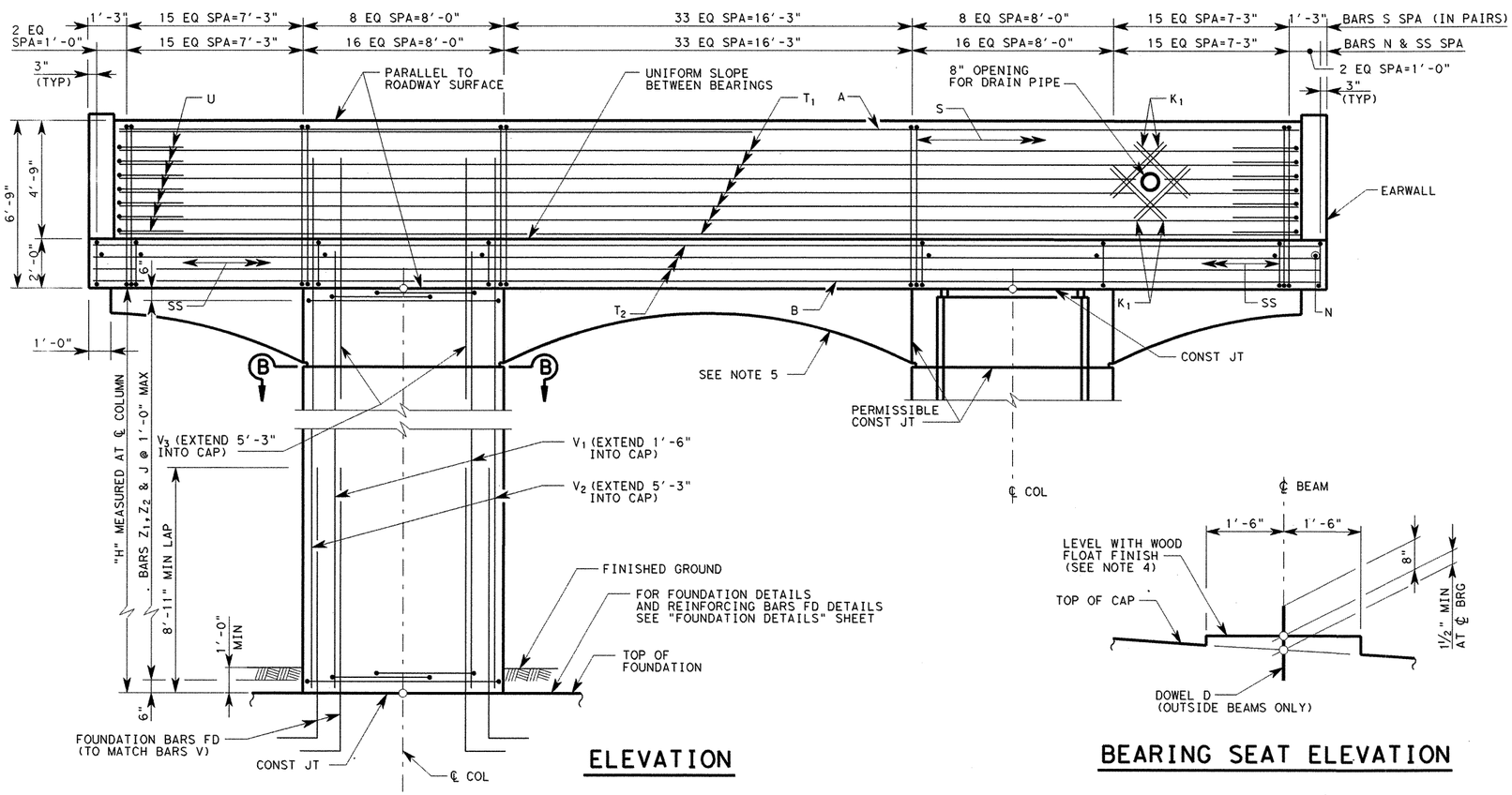

ELEVATION

BEARING SEAT ELEVATION

NOTES:

1. DESIGNED ACCORDING TO AASHTO LRFD BRIDGE SPECIFICATIONS, 4TH EDITION 2007 AND 2009 CURRENT INTERIMS FOR HL-93 LOADING.
2. ALL DIMENSIONS TO THE REINFORCING STEEL ARE TO ℄ OF BAR UNLESS OTHERWISE NOTED.
3. FOR BEARING SEAT ELEVATION SEE ESTIMATED QUANTITIES AND BEARING SEAT ELEVATION SHEET.
4. BEARING SURFACE SHALL BE CLEAN AND FREE OF ALL LOOSE MATERIAL BEFORE PLACING BEARING PAD.
5. SEE "AESTHETIC TREATMENT REINFORCEMENT DETAILS" SHEET FOR AESTHETIC TREATMENT REINFORCEMENT DETAILS AND DIMENSIONS.
6. "H" - HEIGHTS SHOWN ARE APPROXIMATE. ACTUAL COLUMN HEIGHT SHALL BE FIELD VERIFIED PRIOR TO CONSTRUCTION.
7. CONCRETE STRENGTH F'C=3600 PSI.
8. ALL REINFORCING SHALL BE GRADE 60.
9. SEE "DRAIN DETAILS" SHEET FOR DETAILS AND DIMENSIONS NOT SHOWN.
10. FOR DOWEL LOCATIONS SEE BRIDGE LAYOUT SHEETS.

STATE OF TEXAS
RAMKUMAR KOZHIKOTE
103166
LICENSED PROFESSIONAL ENGINEER

HL-93 LOADING Ramkumar Kozhikote 4/11/2011

REV. No.	DATE	REVISION	BY
△			
△			
△			

PBSJ an Atkins company TBPE REG. # F-474

Texas Department of Transportation Austin District
©2011 by TxDOT

SH 45 / O'CONNOR DRIVE WB FRONTAGE RD BENT 12

SCALE: NTS SHEET 3 OF 9

DESIGNED: KD	FED. RD DIV. No.	STATE	PROJECT No.	HIGHWAY No.
CHECKED: AUS	6	TEXAS		LP 1/SH 45

DRAWN: DEW	STATE DISTRICT	COUNTY	CONTROL No.	SECTION No.	JOB No.	SHEET No.
CHECKED: AUS	AUSTIN	WILLIAMSON	0683	06	027	467

DATE: 4/11/2011 TIME: 10:38:38 AM

PLOT DRIVER: RD*11x17*PDF.plt
PEN TABLE: plotordr*ocon.tbl
FILE: r:\trans-design\o'connor\oddbdg\wbfr\OC45BTwbfr03.dgn

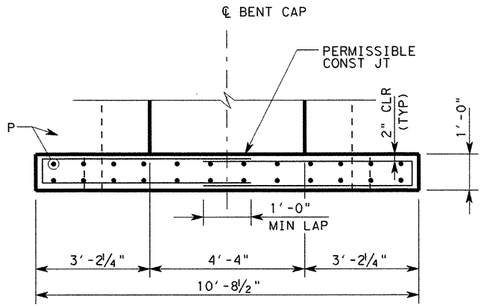

PLAN

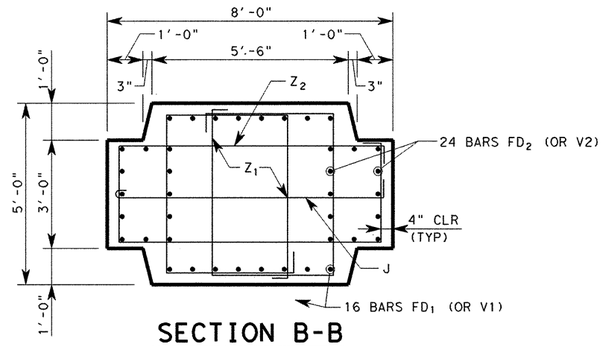

SECTION B-B

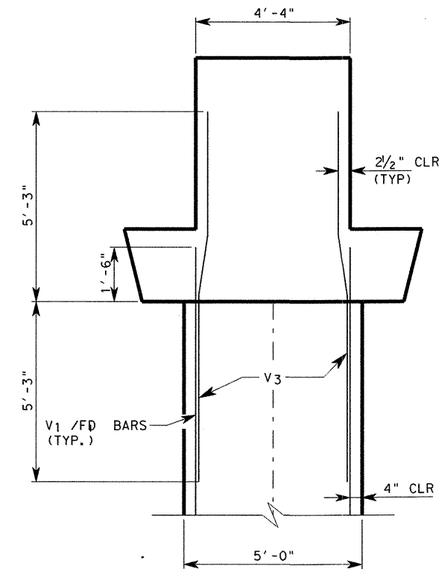

SECTION C-C

(CAP REINFORCEMENT NOT SHOWN FOR CLARITY)

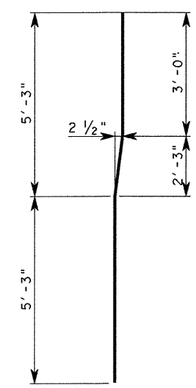

BARS V3

* VARIES DEPENDING ON ROADWAY GRADE. 4" MIN AT ℄ BEARING ON LOW SIDE.

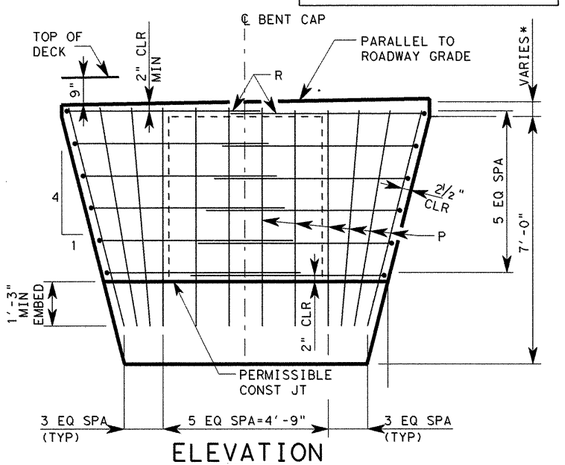

ELEVATION

EARWALL DETAIL

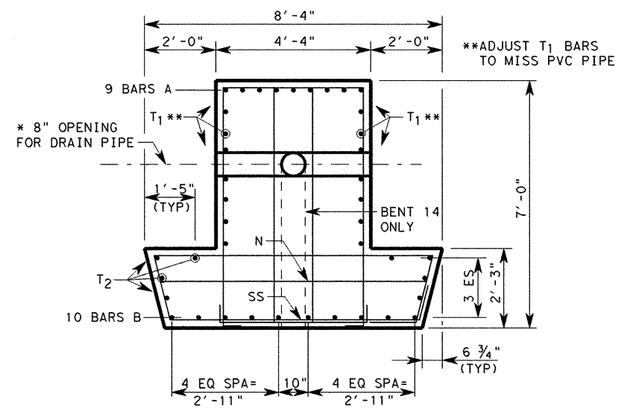

SECTION D-D

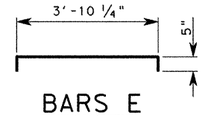

BARS E

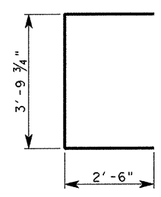

BARS U

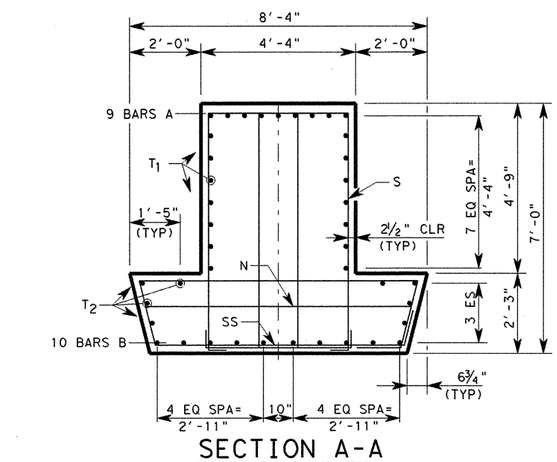

SECTION A-A

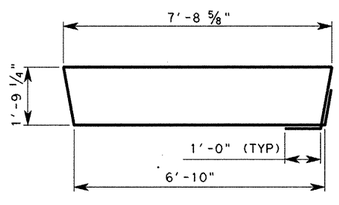

BARS SS

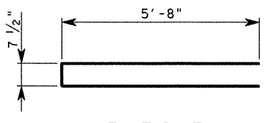

BARS R

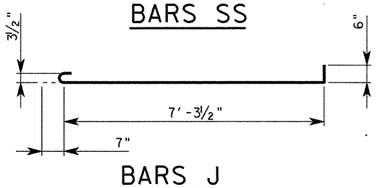

BARS J

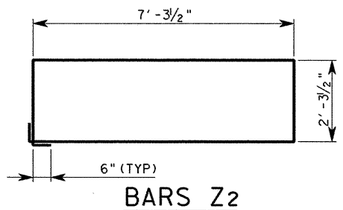

BARS Z2

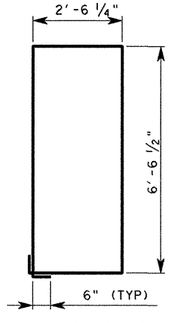

BARS S

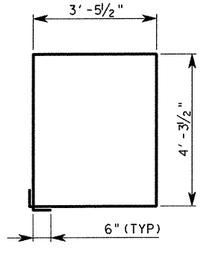

BARS Z1

HL-93 LOADING

STATE OF TEXAS
RAMKUMAR KOZHIKOTE
103166
LICENSED PROFESSIONAL ENGINEER

Ramkumar Kozhikote 4/11/2011

REV. No.	DATE	REVISION	BY
△			
△			
△			

PBSJ an Atkins company TBPE REG. # F-474

Texas Department of Transportation Austin District

©2011 by TxDOT

SH 45 / O'CONNOR DRIVE WB FRONTAGE RD BENTS 12-15

SCALE: NTS SHEET 4 OF 9

DESIGNED: KD	FED. RD DIV. No.	STATE	PROJECT No.			HIGHWAY No.
CHECKED: AUS	6	TEXAS				LP 1/SH 45
DRAWN: DEW	STATE DISTRICT	COUNTY	CONTROL No.	SECTION No.	JOB No.	SHEET No.
CHECKED: AUS	AUSTIN	WILLIAMSON	0683	06	027	468

PLOT DRIVER: RD*11x17*PDF.plt
PEN TABLE: plotordr*ocon.tbl
FILE: r:\trans-design\o'connor\cadd\bdg\wbfr\0C45BTwbfr04.dgn
DATE: 4/11/2011 TIME: 10:38:39 AM

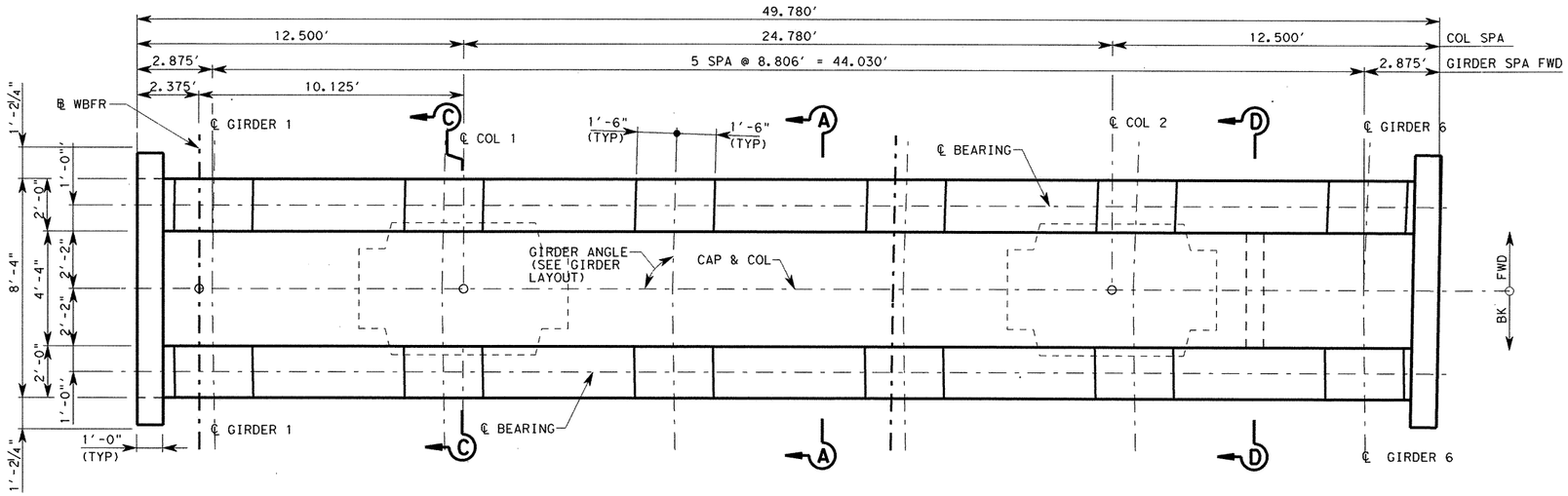

PLAN

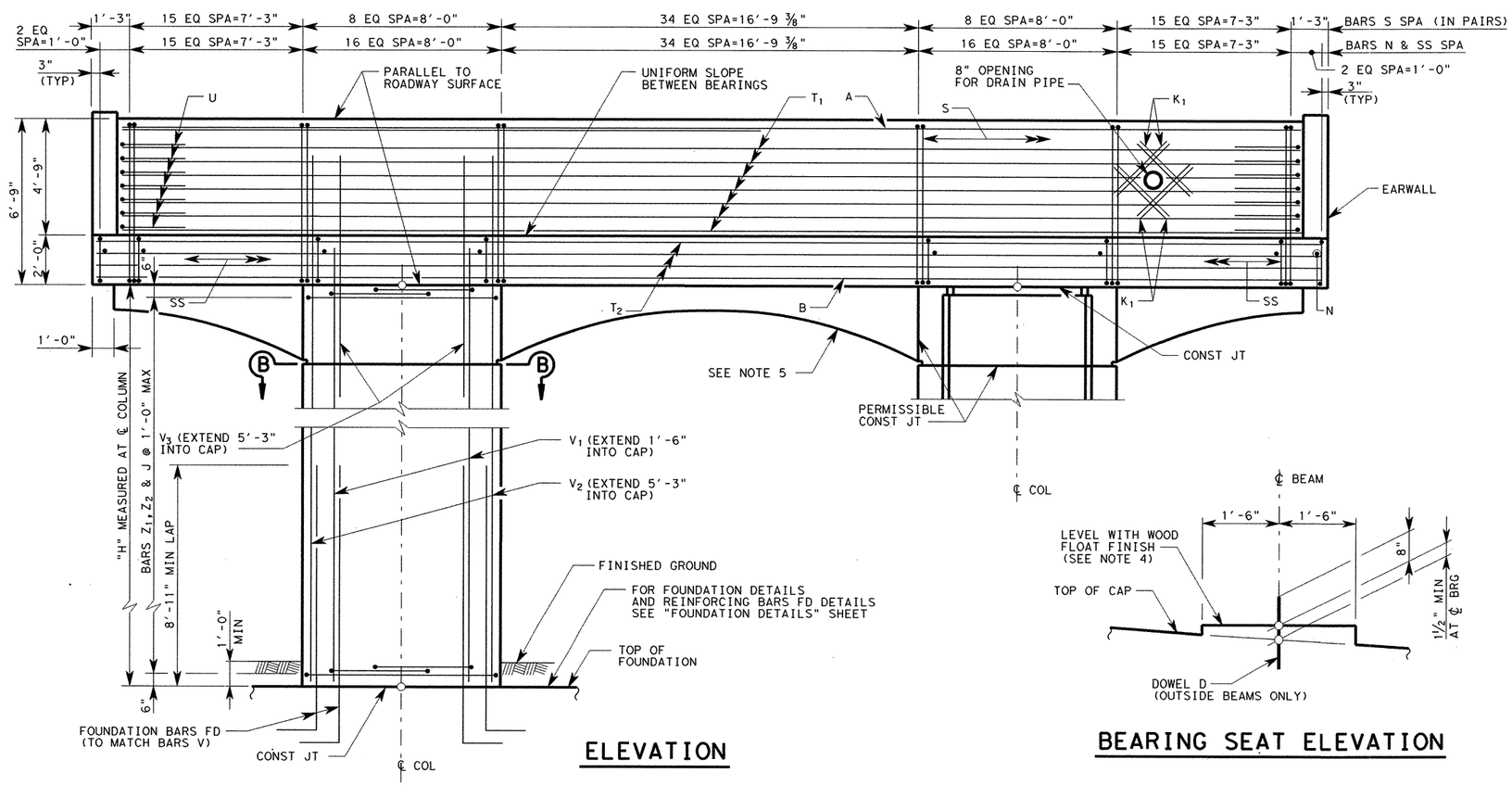

ELEVATION

BEARING SEAT ELEVATION

NOTES:

1. DESIGNED ACCORDING TO AASHTO LRFD BRIDGE SPECIFICATIONS, 4TH EDITION 2007 AND 2009 CURRENT INTERIMS FOR HL-93 LOADING.
2. ALL DIMENSIONS TO THE REINFORCING STEEL ARE TO ℄ OF BAR UNLESS OTHERWISE NOTED.
3. FOR BEARING SEAT ELEVATION SEE ESTIMATED QUANTITIES AND BEARING SEAT ELEVATION SHEET.
4. BEARING SURFACE SHALL BE CLEAN AND FREE OF ALL LOOSE MATERIAL BEFORE PLACING BEARING PAD.
5. SEE "AESTHETIC TREATMENT REINFORCEMENT DETAILS" SHEET FOR AESTHETIC TREATMENT REINFORCEMENT DETAILS AND DIMENSIONS.
6. "H" - HEIGHTS SHOWN ARE APPROXIMATE. ACTUAL COLUMN HEIGHT SHALL BE FIELD VERIFIED PRIOR TO CONSTRUCTION.
7. CONCRETE STRENGTH F'C=3600 PSI.
8. ALL REINFORCING SHALL BE GRADE 60.
9. SEE "DRAIN DETAILS" SHEET FOR DETAILS AND DIMENSIONS NOT SHOWN.

STATE OF TEXAS
RAMKUMAR KOZHIKOTE
103166
LICENSED PROFESSIONAL ENGINEER

HL-93 LOADING

Ramkumar Kozhikote
4/11/2011

REV. No.	DATE	REVISION	BY
△			
△			
△			

PBSJ
an Atkins company
TBPE REG. # F-474

Texas Department of Transportation
Austin District
©2011 by TxDOT

SH 45 / O'CONNOR DRIVE
WB FRONTAGE RD
BENT 13

SCALE: NTS
SHEET 5 OF 9

DESIGNED: KD	FED. RD DIV. No.	STATE	PROJECT No.			HIGHWAY No.
CHECKED: AUS	6	TEXAS				LP 1/SH 45
DRAWN: DEW	STATE DISTRICT	COUNTY	CONTROL No.	SECTION No.	JOB No.	SHEET No.
CHECKED: AUS	AUSTIN	WILLIAMSON	0683	06	027	469

DATE: 4/11/2011 TIME: 10:38:42 AM
PLOT DRIVER: RD*11x17*PDF.plt
PEN TABLE: plotordr*ocon.tbl
FILE: r:\trans-design\o'connor\oodd\bdg\wbfr\0C45BTwbfr05.dgn

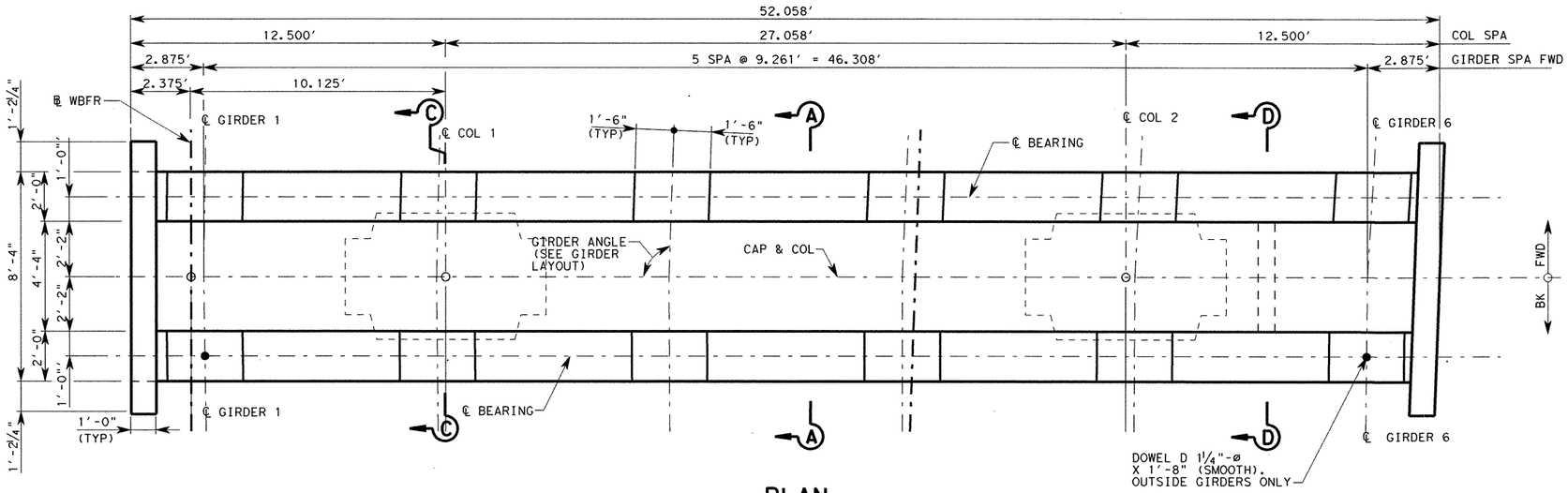

PLAN

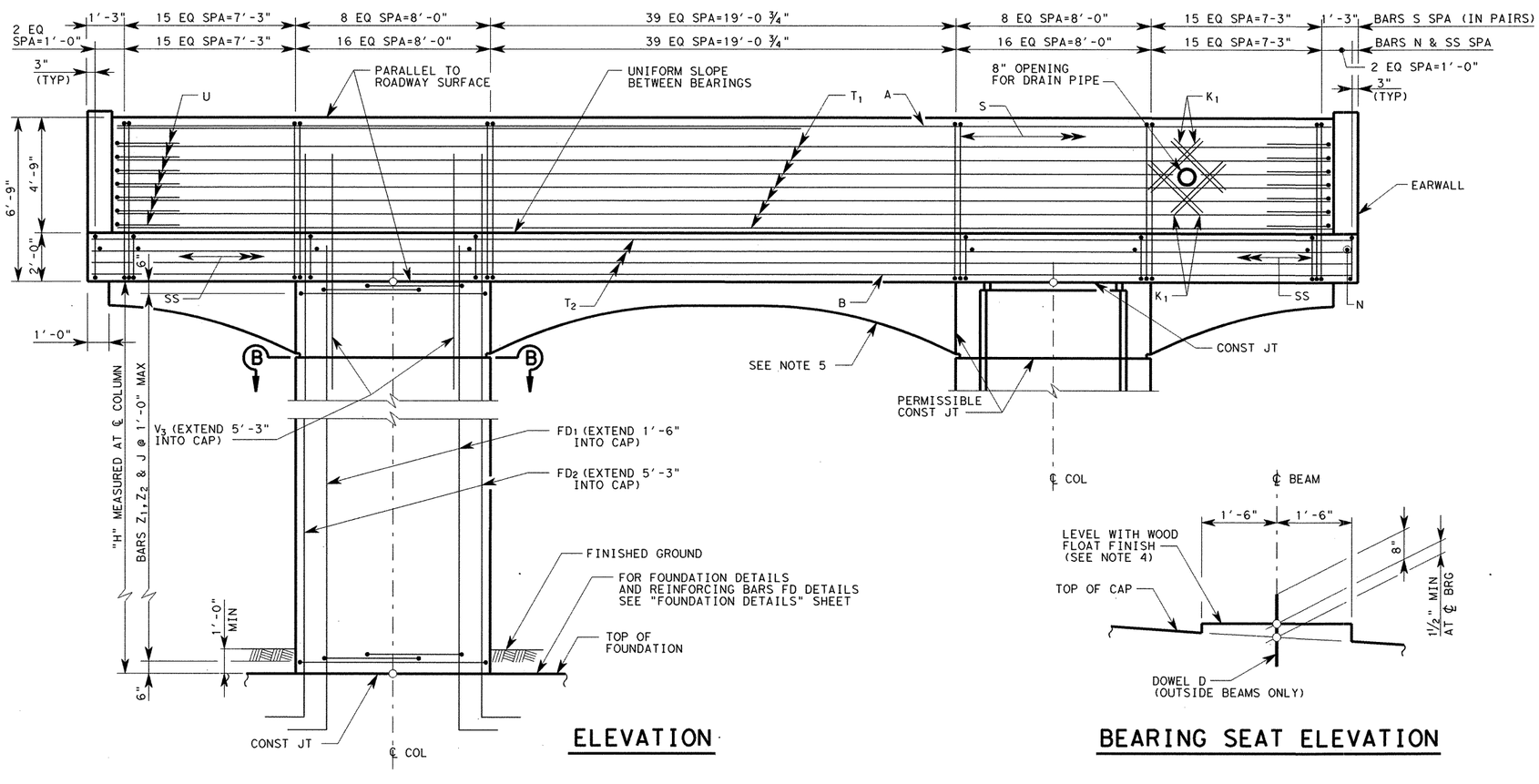

ELEVATION

BEARING SEAT ELEVATION

NOTES:

1. DESIGNED ACCORDING TO AASHTO LRFD BRIDGE SPECIFICATIONS, 4TH EDITION 2007 AND 2009 CURRENT INTERIMS FOR HL-93 LOADING.
2. ALL DIMENSIONS TO THE REINFORCING STEEL ARE TO ℄ OF BAR UNLESS OTHERWISE NOTED.
3. FOR BEARING SEAT ELEVATION SEE ESTIMATED QUANTITIES AND BEARING SEAT ELEVATION SHEET.
4. BEARING SURFACE SHALL BE CLEAN AND FREE OF ALL LOOSE MATERIAL BEFORE PLACING BEARING PAD.
5. SEE "AESTHETIC TREATMENT REINFORCEMENT DETAILS" SHEET FOR AESTHETIC TREATMENT REINFORCEMENT DETAILS AND DIMENSIONS.
6. "H" - HEIGHTS SHOWN ARE APPROXIMATE. ACTUAL COLUMN HEIGHT SHALL BE FIELD VERIFIED PRIOR TO CONSTRUCTION.
7. CONCRETE STRENGTH F'C=3600 PSI.
8. ALL REINFORCING SHALL BE GRADE 60.
9. SEE "DRAIN DETAILS" SHEET FOR DETAILS AND DIMENSIONS NOT SHOWN.

STATE OF TEXAS
RAMKUMAR KOZHIKOTE
103166
LICENSED PROFESSIONAL ENGINEER

HL-93 LOADING

Ramkumar Kozhikote 4/11/2011

REV. No.	DATE	REVISION	BY
△			
△			
△			

PBSJ
an Atkins company
TBPE REG. # F-474

Texas Department of Transportation
Austin District
©2011 by TxDOT

SH 45 / O'CONNOR DRIVE
WB FRONTAGE RD
BENT 14

SCALE: NTS

SHEET 6 OF 9

DESIGNED: KD	FED. RD DIV. No.	STATE	PROJECT No.			HIGHWAY No.
CHECKED: AUS	6	TEXAS				LP 1/SH 45
DRAWN: DEW	STATE DISTRICT	COUNTY	CONTROL No.	SECTION No.	JOB No.	SHEET No.
CHECKED: AUS	AUSTIN	WILLIAMSON	0683	06	027	470

DATE: 4/11/2011 TIME: 10:38:44 AM

PLOT DRIVER: RD*11x17*PDF.plt
PEN TABLE: plotordr*ocon.tbl
FILE: r:\trans-design\o'connor\codd\bdg\wbfr\0C45BTwbfr06.dgn

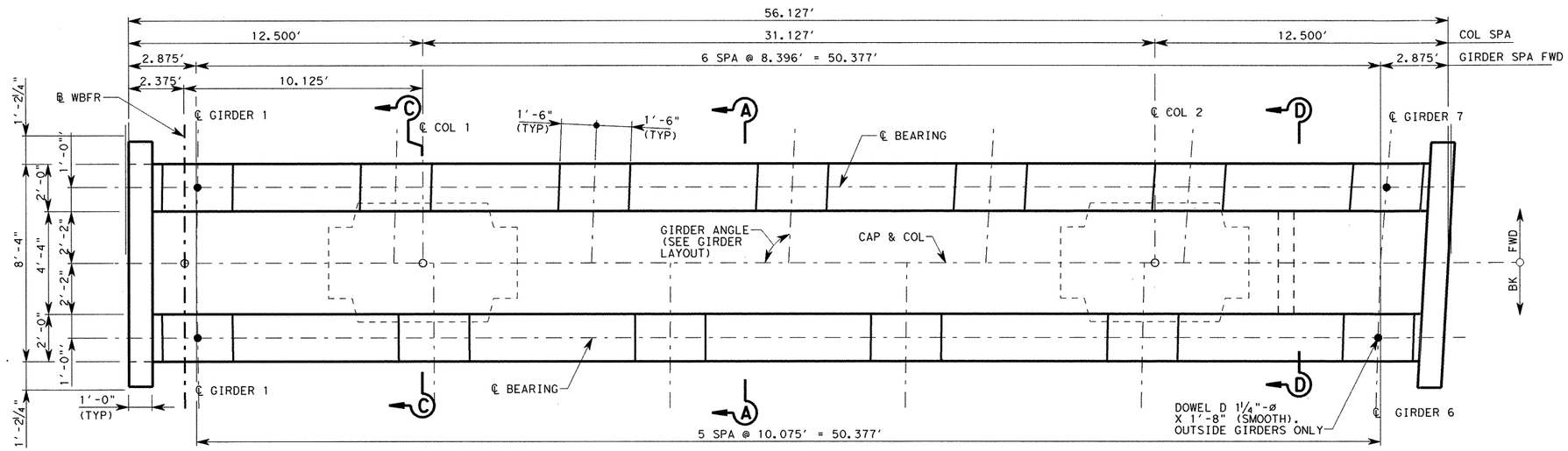

PLAN

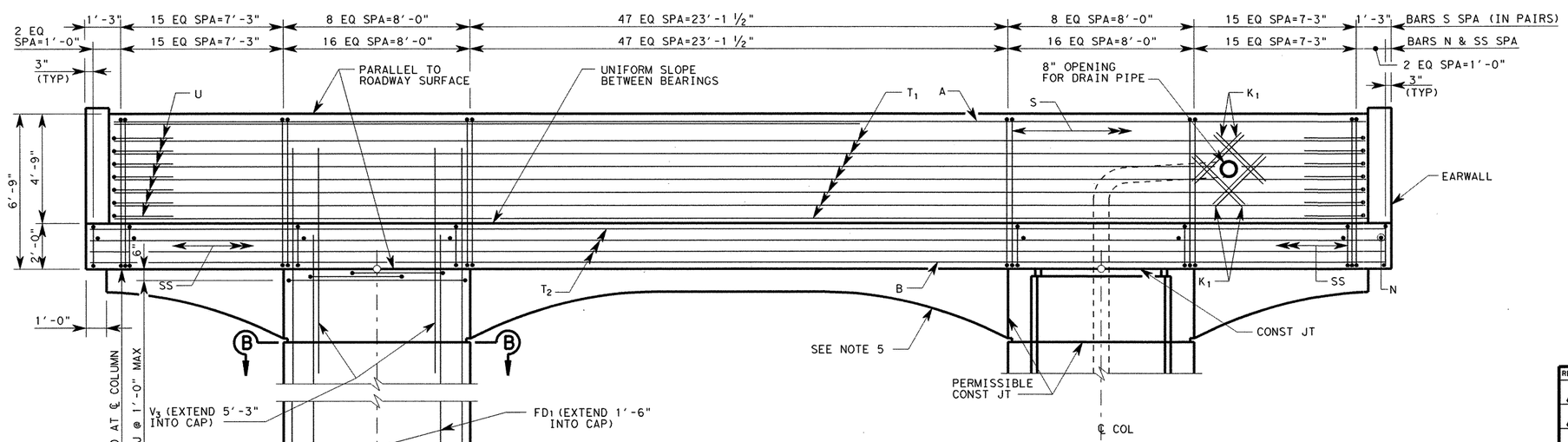

ELEVATION

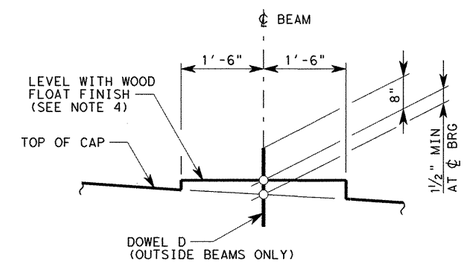

BEARING SEAT ELEVATION

NOTES:

1. DESIGNED ACCORDING TO AASHTO LRFD BRIDGE SPECIFICATIONS, 4TH EDITION 2007 AND 2009 CURRENT INTERIMS FOR HL-93 LOADING.
2. ALL DIMENSIONS TO THE REINFORCING STEEL ARE TO ℄ OF BAR UNLESS OTHERWISE NOTED.
3. FOR BEARING SEAT ELEVATION SEE ESTIMATED QUANTITIES AND BEARING SEAT ELEVATION SHEET.
4. BEARING SURFACE SHALL BE CLEAN AND FREE OF ALL LOOSE MATERIAL BEFORE PLACING BEARING PAD.
5. SEE "AESTHETIC TREATMENT REINFORCEMENT DETAILS" SHEET FOR AESTHETIC TREATMENT REINFORCEMENT DETAILS AND DIMENSIONS.
6. "H" - HEIGHTS SHOWN ARE APPROXIMATE. ACTUAL COLUMN HEIGHT SHALL BE FIELD VERIFIED PRIOR TO CONSTRUCTION.
7. CONCRETE STRENGTH F'C=3600 PSI.
8. ALL REINFORCING SHALL BE GRADE 60.
9. SEE "DRAIN DETAILS" SHEET FOR DETAILS AND DIMENSIONS NOT SHOWN.

STATE OF TEXAS
RAMKUMAR KOZHIKOTE
103166
LICENSED PROFESSIONAL ENGINEER

HL-93 LOADING

Ramkumar Kozhikote 4/11/2011

REV. No.	DATE	REVISION	BY
△			
△			
△			

PBSJ an Atkins company TBPE REG. # F-474

Texas Department of Transportation Austin District

©2011 by TxDOT

SH 45 / O'CONNOR DRIVE WB FRONTAGE RD BENT 15

SCALE: NTS SHEET 7 OF 9

DESIGNED: KD	FED. RD DIV. No.	STATE	PROJECT No.		HIGHWAY No.
CHECKED: AUS	6	TEXAS			LP 1/SH 45

DRAWN: DEW	STATE DISTRICT	COUNTY	CONTROL No.	SECTION No.	JOB No.	SHEET No.
CHECKED: AUS	AUSTIN	WILLIAMSON	0683	06	027	471

DATE: 4/11/2011 TIME: 10:38:46 AM
PLOT DRIVER: RD*11x17*PDF.plt
PEN TABLE: plotordr*ocon.tbl
FILE: r:\trans-design\o'connor\codd\bdg\wbfr\0C45BTwbfr07.dgn

TABLE OF ESTIMATED QUANTITIES (BENT 12 CAP)

BAR	NO.	SIZE	LENGTH	WEIGHT
A	9	#11	46'-11"	2,243
B	10	#11	48'-11"	2,599
D	4	1¼ "ø	1'-8"	28
E	22	#5	4'-8"	107
K1	16	#6	3'-0"	72
N	104	#5	7'-5"	805
P	48	#5	6'-1"	305
R	24	#4	12'-0"	192
S	164	#5	20'-2"	3,450
SS	104	#6	20'-2"	3,150
T1	14	#6	46'-11"	987
T2	8	#6	48'-11"	588
U	14	#6	8'-10"	186
TOTAL REINFORCING STEEL *			LB	14,711
CLASS "C" (MASS) CONC (BENT)			CY	71.5

* FOR CONTRACTOR'S INFORMATION ONLY

TABLE OF ESTIMATED QUANTITIES (BENT 13 CAP)

BAR	NO.	SIZE	LENGTH	WEIGHT
A	9	#11	47'-5"	2,267
B	10	#11	49'-5"	2,626
D	4	1¼ "ø	1'-8"	28
E	22	#5	4'-8"	107
K1	16	#6	3'-0"	72
N	101	#5	7'-5"	781
P	48	#5	6'-1"	305
R	24	#4	12'-0"	192
S	162	#5	20'-2"	3,407
SS	101	#6	20'-2"	3,059
T1	14	#6	47'-5"	997
T2	8	#6	49'-5"	594
U	14	#6	8'-10"	186
TOTAL REINFORCING STEEL *			LB	14,622
CLASS "C" (MASS) CONC (BENT)			CY	72.2

* FOR CONTRACTOR'S INFORMATION ONLY

TABLE OF ESTIMATED QUANTITIES (BENT 14 CAP)

BAR	NO.	SIZE	LENGTH	WEIGHT
A	9	#11	49'-8"	2,375
B	10	#11	51'-8"	2,745
D	4	1¼ "ø	1'-8"	28
E	22	#5	4'-8"	107
K1	16	#6	3'-0"	72
N	106	#5	7'-5"	820
P	48	#5	6'-1"	305
R	24	#4	12'-0"	192
S	172	#5	20'-2"	3,618
SS	106	#6	20'-2"	3,211
T1	14	#6	49'-8"	1,044
T2	8	#6	51'-8"	621
U	14	#6	8'-10"	186
TOTAL REINFORCING STEEL *			LB	15,324
CLASS "C" (MASS) CONC (BENT)			CY	75.4

* FOR CONTRACTOR'S INFORMATION ONLY

TABLE OF ESTIMATED QUANTITIES (BENT 15 CAP)

BAR	NO.	SIZE	LENGTH	WEIGHT
A	9	#11	53'-9"	2,570
B	10	#11	55'-9"	2,962
D	4	1¼ "ø	1'-8"	28
E	22	#5	4'-8"	107
K1	16	#6	3'-0"	72
N	114	#5	7'-5"	882
P	48	#5	6'-1"	305
R	24	#4	12'-0"	192
S	188	#5	20'-2"	3,954
SS	114	#6	20'-2"	3,453
T1	14	#6	53'-9"	1,130
T2	8	#6	55'-9"	670
U	14	#6	8'-10"	186
TOTAL REINFORCING STEEL *			LB	16,511
CLASS "C" (MASS) CONC (BENT)			CY	81.2

* FOR CONTRACTOR'S INFORMATION ONLY

Ramkumar Kozhikote
June 2, 2011

STATE OF TEXAS
RAMKUMAR KOZHIKOTE
103166
LICENSED
PROFESSIONAL ENGINEER

HL-93
LOADING

REV. NO.	DATE	REVISION	BY
△			
△			
△			

PBSJ
an Atkins company
TBPE REG. # F-474

Texas Department of Transportation
Austin District
©2011 by TxDOT

SH 45 / O'CONNOR DRIVE
WB FRONTAGE RD
BENTS 12-15

SHEET 8 OF 9

DESIGNED: KD	FED. RD DIV. No.	STATE	PROJECT No.		HIGHWAY No.	
CHECKED: AUS	6	TEXAS			LP 1/SH 45	
DRAWN: DEW	STATE DISTRICT	COUNTY	CONTROL No.	SECTION No.	JOB No.	SHEET No.
CHECKED: AUS	AUSTIN	WILLIAMSON	0683	06	027	472

DATE: 6/2/2011 TIME: 2:16:34 PM
PLOT DRIVER: RD*11x17*PDF.plt
PEN TABLE: plotordr*ocon.tbl
FILE: r:\trans-design\o'connor\cadd\bdg\wbfr\0C45BTwbfr08.dgn

① BENTS 2-11 TABLE OF VARIABLE COLUMN QUANTITIES

BENT/ COL	COLUMN HEIGHT "H"	BARS V_1 #11x			BARS V_2 #11x			BARS V_3 #8 x 10'-9"			BARS Z_1 #5 x 20'-9"			BARS Z_2 #5 x 26'-2"			BARS J #4 x 10'-4 ½"			TOTAL ESTIMATED ② QUANTITIES PER COLUMN REINF STEEL *	CLASS "C" CONC (BENT)
		NO.	LENGTH (FT)	WEIGHT (LB)	NO.	LENGTH (FT)	WEIGHT (LB)	NO.	LENGTH (FT)	WEIGHT (LB)	NO.	LENGTH (FT)	WEIGHT (LB)	NO.	LENGTH (FT)	WEIGHT (LB)	NO.	LENGTH (FT)	WEIGHT (LB)	LB	CY
2/1	17'	20	18'-6"	1,966	32	22'-3"	3,783	20	10'-9"	574	34	20'-9"	736	17	26'-2"	464	17	10'-4 ½"	118	7,640	34.9
3/1	16'	20	17'-6"	1,860	32	21'-3"	3,613	20	10'-9"	574	32	20'-9"	693	16	26'-2"	437	16	10'-4 ½"	111	7,287	32.9
4/1	19'	20	20'-6"	2,178	32	24'-3"	4,123	20	10'-9"	574	38	20'-9"	822	19	26'-2"	519	19	10'-4 ½"	132	8,348	39.1
5/1	25'	20	26'-6"	2,816	32	30'-3"	5,143	20	10'-9"	574	50	20'-9"	1,082	25	26'-2"	682	25	10'-4 ½"	173	10,471	51.4
6/1	29'	20	30'-6"	3,241	32	34'-3"	5,823	20	10'-9"	574	58	20'-9"	1,255	29	26'-2"	791	29	10'-4 ½"	201	11,886	59.6
7/1	31'	20	32'-6"	3,453	32	36'-3"	6,163	20	10'-9"	574	62	20'-9"	1,342	31	26'-2"	846	31	10'-4 ½"	215	12,593	63.7
8/1	28'	20	29'-6"	3,135	32	33'-3"	5,653	20	10'-9"	574	56	20'-9"	1,212	28	26'-2"	764	28	10'-4 ½"	194	11,532	57.6
9/1	26'	20	27'-6"	2,922	32	31'-3"	5,313	20	10'-9"	574	52	20'-9"	1,125	26	26'-2"	710	26	10'-4 ½"	180	10,824	53.4
10/1	21'	20	22'-6"	2,391	32	26'-3"	4,463	20	10'-9"	574	42	20'-9"	909	21	26'-2"	573	21	10'-4 ½"	146	9,055	43.2
11/1	22'	20	23'-6"	2,497	32	27'-3"	4,633	20	10'-9"	574	44	20'-9"	952	22	26'-2"	600	22	10'-4 ½"	152	9,409	45.2

* FOR CONTRACTOR'S INFORMATION ONLY

ADJUST NUMBER OF BARS Z_2 AND J BY 1 AND NUMBER OF BARS Z_1 BY 2 FOR EACH 1 LF VARIATION IN "H" VALUE.

ADJUST REINFORCING STEEL TOTAL BY 354 LB AND CLASS "C" CONC BY 2.0556 CY FOR EACH 1 LF VARIATION IN "H" VALUE.

① BENTS 12-13 TABLE OF VARIABLE COLUMN QUANTITIES

BENT/ COL	COLUMN HEIGHT "H"	BARS V_1 #11x			BARS V_2 #11x			BARS V_3 #8 x 10'-9"			BARS Z_1 #5 x 16'-6"			BARS Z_2 #5 x 20'-2"			BARS J #4 x 8'-4 ½"			TOTAL ESTIMATED ② QUANTITIES PER COLUMN REINF STEEL *	CLASS "C" CONC (BENT)
		NO.	LENGTH (FT)	WEIGHT (LB)	NO.	LENGTH (FT)	WEIGHT (LB)	NO.	LENGTH (FT)	WEIGHT (LB)	NO.	LENGTH (FT)	WEIGHT (LB)	NO.	LENGTH (FT)	WEIGHT (LB)	NO.	LENGTH (FT)	WEIGHT (LB)	LB	CY
12/1	17'	16	18'-6"	1,573	24	22'-3"	2,837	16	10'-9"	459	34	16'-6"	585	17	20'-2"	358	17	8'-4 ½"	95	5,907	22.4
12/2	17'	16	18'-6"	1,573	24	22'-3"	2,837	16	10'-9"	459	34	16'-6"	585	17	20'-2"	358	17	8'-4 ½"	95	5,907	22.4
13/1	13'	16	14'-6"	1,233	24	18'-3"	2,327	16	10'-9"	459	26	16'-6"	447	13	20'-2"	273	13	8'-4 ½"	73	4,813	17.1
13/2	13'	16	14'-6"	1,233	24	18'-3"	2,327	16	10'-9"	459	26	16'-6"	447	13	20'-2"	273	13	8'-4 ½"	73	4,813	17.1

* FOR CONTRACTOR'S INFORMATION ONLY

ADJUST NUMBER OF BARS Z_2 AND J BY 1 AND NUMBER OF BARS Z_1 BY 2 FOR EACH 1 LF VARIATION IN "H" VALUE.

ADJUST REINFORCING STEEL TOTAL BY 274 LB AND CLASS "C" CONC BY 1.3148 CY FOR EACH 1 LF VARIATION IN "H" VALUE.

① BENTS 14-15 TABLE OF VARIABLE COLUMN QUANTITIES

BENT/ COL	COLUMN HEIGHT "H"	BARS V_3 #8 x 10'-9"			BARS Z_1 #5 x 16'-6"			BARS Z_2 #5 x 20'-2"			BARS J #4 x 8'-4 ½"			TOTAL ESTIMATED ② QUANTITIES PER COLUMN REINF STEEL *	CLASS "C" CONC (BENT)
		NO.	LENGTH (FT)	WEIGHT (LB)	NO.	LENGTH (FT)	WEIGHT (LB)	NO.	LENGTH (FT)	WEIGHT (LB)	NO.	LENGTH (FT)	WEIGHT (LB)	LB	CY
14/1	9'	16	10'-9"	459	18	16'-6"	310	9	20'-2"	189	9	8'-4 ½"	50	1,009	11.8
14/2	9'	16	10'-9"	459	18	16'-6"	310	9	20'-2"	189	9	8'-4 ½"	50	1,009	11.8
15/1	5'	16	10'-9"	459	10	16'-6"	172	5	20'-2"	105	5	8'-4 ½"	28	764	6.6
15/2	5'	16	10'-9"	459	10	16'-6'	172	5	20'-2"	105	5	8'-4 ½"	28	764	6.6

* FOR CONTRACTOR'S INFORMATION ONLY

ADJUST NUMBER OF BARS Z_2 AND J BY 1 AND NUMBER OF BARS Z_1 BY 2 FOR EACH 1 LF VARIATION IN "H" VALUE.

ADJUST REINFORCING STEEL TOTAL BY 62 LB AND CLASS "C" CONC BY 1.3148 CY FOR EACH 1 LF VARIATION IN "H" VALUE.

STATE OF TEXAS
RAMKUMAR KOZHIKOTE
103166
LICENSED PROFESSIONAL ENGINEER

Ramkumar Kozhikote
4/11/2011

HL-93 LOADING

REV. No.	DATE	REVISION	BY
△			
△			
△			

PBSJ
an Atkins company
TBPE REG. # F-474

Texas Department of Transportation
Austin District
©2011 by TxDOT

SH 45 / O'CONNOR DRIVE
WB FRONTAGE RD
BENTS 2 - 15

SHEET 9 OF 9

DESIGNED: KD	FED. RD DIV. No.	STATE	PROJECT No.			HIGHWAY No.	
CHECKED: OAS	6	TEXAS				LP 1/SH 45	
DRAWN: DEW	STATE DISTRICT	COUNTY	CONTROL No.	SECTION No.	JOB No.	SHEET No.	
CHECKED: OAS	AUSTIN	WILLIAMSON	0683	06	027	473	

DATE: 4/11/2011 TIME: 10:38:49 AM
PLOT DRIVER: RD*11x17*PDF.plt
PEN TABLE: plotordr*ocon.tbl
FILE: r:\trans-design\o'connor\oddb\bdg\wbfr\OC45BTwbfr09.dgn

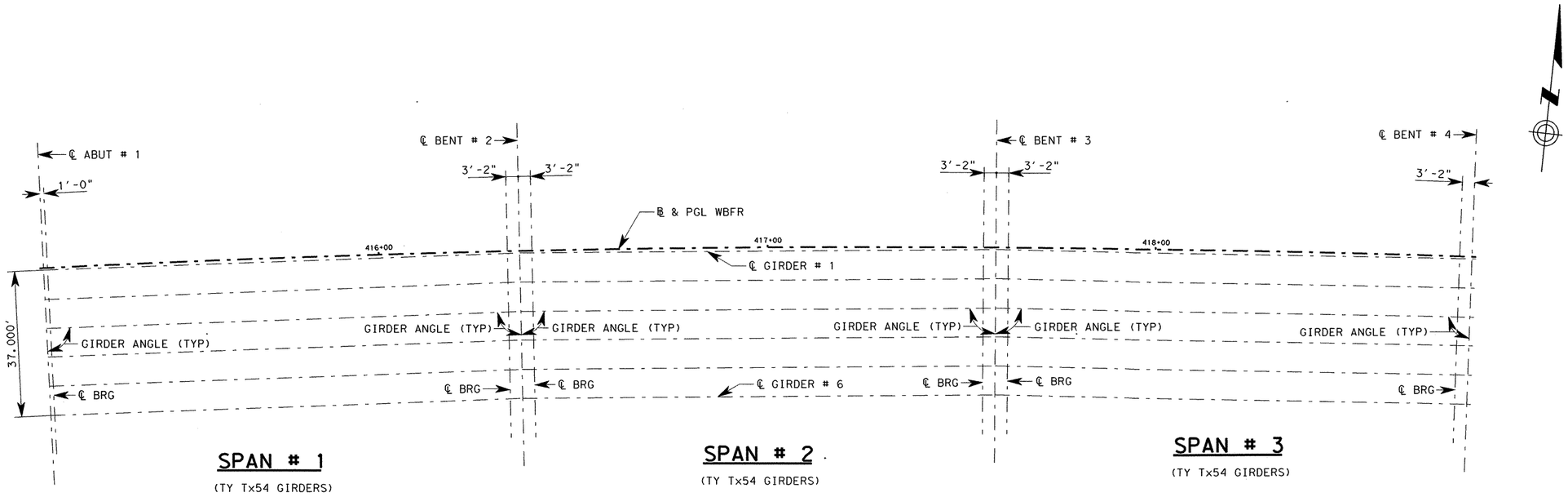

① GIRDER LENGTHS SHOWN ARE BOTTOM GIRDER FLANGE LENGTHS WITH ADJUSTMENTS MADE FOR GIRDER SLOPE.

BENT REPORT

BENT REPORT

Abut 1 N 9° 05' 58.19" W

Distance between Station Line and Girder 1 0.500 R

		Girder Spancing (C.L. Bent	Girder Angle D	M	S
Span 1	Girder 1	0.000	89°	11'	47
	Girder 2	7.400	89°	11'	47
	Girder 3	7.400	89°	11'	47
	Girder 4	7.400	89°	11'	47
	Girder 5	7.400	89°	11'	47
	Girder 6	7.400	89°	11'	47
	Total	37.000			

Bent 2 N 7° 29' 31.38" W

Distance between Station Line and Girder 1 0.500 R

		Girder Spancing (C.L. Bent	Girder Angle D	M	S
Span 1	Girder 1	0.000	89°	11'	47
	Girder 2	7.400	89°	11'	47
	Girder 3	7.400	89°	11'	47
	Girder 4	7.400	89°	11'	47
	Girder 5	7.400	89°	11'	47
	Girder 6	7.400	89°	11'	47
	Total	37.000			
Span 2	Girder 1	0.000	89°	11'	47
	Girder 2	7.400	89°	11'	47
	Girder 3	7.400	89°	11'	47
	Girder 4	7.400	89°	11'	47
	Girder 5	7.400	89°	11'	47
	Girder 6	7.400	89°	11'	47
	Total	37.000			

Bent 3 N 6° 07' 41.95" W

Distance between Station Line and Girder 1 0.500 R

		Girder Spancing (C.L. Bent	Girder Angle D	M	S
Span 2	Girder 1	0.000	89°	11'	47
	Girder 2	7.400	89°	11'	47
	Girder 3	7.400	89°	11'	47
	Girder 4	7.400	89°	11'	47
	Girder 5	7.400	89°	11'	47
	Girder 6	7.400	89°	11'	47
	Total	37.000			
Span 3	Girder 1	0.000	89°	11'	47
	Girder 2	7.400	89°	11'	47
	Girder 3	7.400	89°	11'	47
	Girder 4	7.400	89°	11'	47
	Girder 5	7.400	89°	11'	47
	Girder 6	7.400	89°	11'	47
	Total	37.000			

Bent 4 N 4° 16' 37.37" W

Distance between Station Line and Girder 1 0.500 R

		Girder Spancing (C.L. Bent	Girder Angle D	M	S
Span 3	Girder 1	0.000	89°	11'	47
	Girder 2	7.400	89°	11'	47
	Girder 3	7.400	89°	11'	47
	Girder 4	7.400	89°	11'	47
	Girder 5	7.400	89°	11'	47
	Girder 6	7.400	89°	11'	47
	Total	37.000			

GIRDER REPORT

Girder Reprt Span 1

	Horizontal Distance C-C Bent	C-C Bearing	True Distance Bot. BM. FLG	Girder Slope
Girder 1	122.482	118.315	119.910	-0.040
Girder 2	122.274	118.107	119.703	-0.040
Girder 3	122.067	117.900	119.495	-0.040
Girder 4	121.859	117.692	119.288	-0.041
Girder 5	121.652	117.484	119.080	-0.041
Girder 6	121.444	117.277	118.873	-0.041

Girder Reprt Span 2

	Horizontal Distance C-C Bent	C-C Bearing	True Distance Bot. BM. FLG	Girder Slope
Girder 1	122.482	116.148	117.727	-0.037
Girder 2	122.174	115.940	117.520	-0.037
Girder 3	122.067	115.733	117.312	-0.037
Girder 4	121.859	115.525	117.105	-0.037
Girder 5	121.652	115.318	116.897	-0.037
Girder 6	121.444	115.110	116.690	-0.038

Girder Reprt Span 3

	Horizontal Distance C-C Bent	C-C Bearing	True Distance Bot. BM. FLG	Girder Slope
Girder 1	122.482	116.148	117.677	-0.022
Girder 2	122.274	115.940	117.469	-0.022
Girder 3	122.067	115.733	117.262	-0.022
Girder 4	121.859	115.525	117.054	-0.022
Girder 5	121.652	115.318	116.847	-0.022
Girder 6	121.444	115.110	116.639	-0.022

STATE OF TEXAS
RAMKUMAR KOZHIKOTE
103166
LICENSED PROFESSIONAL ENGINEER

HL-93 LOADING

Ramkumar Kozhikote 4/11/2011

REV. No.	DATE	REVISION	BY
△			
△			
△			

PBSJ an Atkins company TBPE REG. # F-474

Texas Department of Transportation Austin District

©2011 by TxDOT

SH 45 / O'CONNOR DRIVE
WB FRONTAGE RD
I-GIRDER LAYOUT
(SPANS 1-3)

SCALE: 1"=30' SHEET 1 OF 6

DESIGNED: AMG	FED. RD DIV. No.	STATE	PROJECT No.			HIGHWAY No.	
CHECKED: AUS	6	TEXAS				LP 1/SH 45	
DRAWN: DEW	STATE DISTRICT	COUNTY	CONTROL No.	SECTION No.	JOB No.	SHEET No.	
CHECKED: AUS	AUSTIN	WILLIAMSON	0683	06	027	474	

DATE: 4/11/2011 TIME: 10:38:52 AM
PLOT DRIVER: RD*11x17*PDF.plt
PEN TABLE: plotordr*ocon.tbl
FILE: r:\trans-design\o'connor\oddy\bdg\wbfr\OC45GLwbfr01.dgn

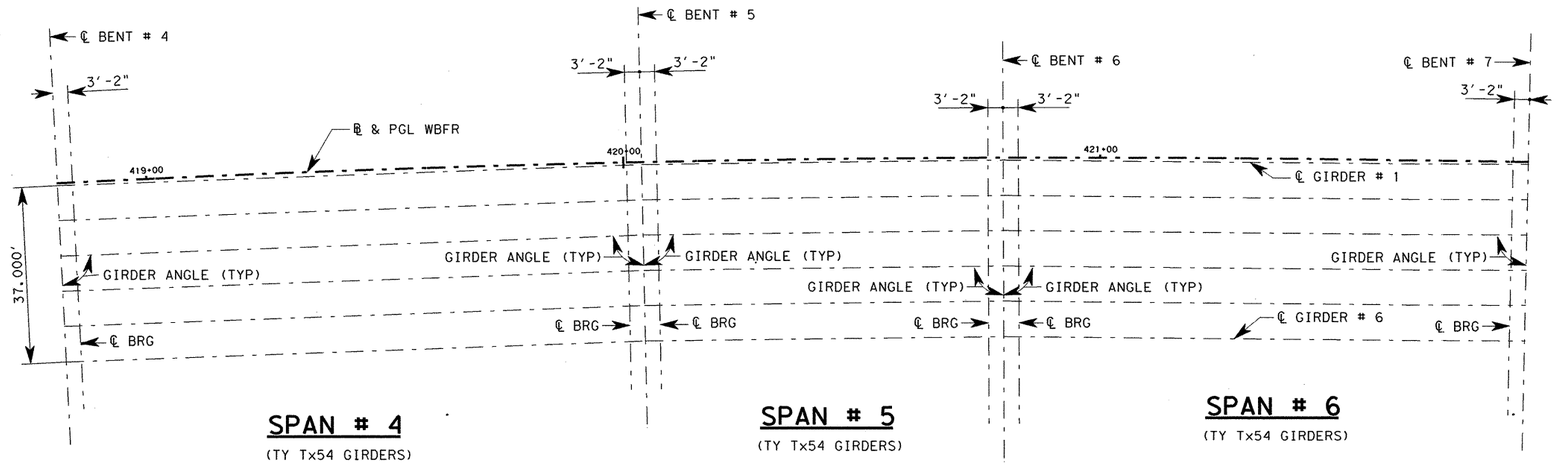

① GIRDER LENGTHS SHOWN ARE BOTTOM GIRDER FLANGE LENGTHS WITH ADJUSTMENTS MADE FOR GIRDER SLOPE.

BENT REPORT

Bent 4 N 4 16' 37.37" W
Distance between Station Line and Girder 1 0.500 R
Girder Spancing (C.L. Bent — Beam Angle

			D	M	S
Span 4	Beam 1	0.000	89	11	47
	Beam 2	7.400	89	11	47
	Beam 3	7.400	89	11	47
	Beam 4	7.400	89	11	47
	Beam 5	7.400	89	11	47
	Beam 6	7.400	89	11	47
	Total	37.000			

Bent 5 N 2 40' 11.00" W
Distance between Station Line and Girder 1 0.500 R
Girder Spancing (C.L. Bent — Beam Angle

			D	M	S
Span 4	Beam 1	0.000	89	11	47
	Beam 2	7.400	89	11	47
	Beam 3	7.400	89	11	47
	Beam 4	7.400	89	11	47
	Beam 5	7.400	89	11	47
	Beam 6	7.400	89	11	47
	Total	37.000			

Bent 5 N 2 40' 11.00" W
Distance between Station Line and Girder 1 0.500 R
Girder Spancing (C.L. Bent — Beam Angle

			D	M	S
Span 5	Beam 1	0.000	89	30	07
	Beam 2	7.400	89	30	07
	Beam 3	7.400	89	30	07
	Beam 4	7.400	89	30	07
	Beam 5	7.400	89	30	07
	Beam 6	7.400	89	30	07
	Total	37.000			

Bent 6 N 1 40' 25.00" W
Distance between Station Line and Girder 1 0.500 R
Girder Spancing (C.L. Bent — Beam Angle

			D	M	S
Span 5	Beam 1	0.000	89	30	07
	Beam 2	7.400	89	30	07
	Beam 3	7.400	89	30	07
	Beam 4	7.400	89	30	07
	Beam 5	7.400	89	30	07
	Beam 6	7.400	89	30	07
	Total	37.000			

Bent 6 N 1 40' 25.00" W
Distance between Station Line and Girder 1 0.500 R
Girder Spancing (C.L. Bent — Beam Angle

			D	M	S
Span 6	Beam 1	0.000	89	16	37
	Beam 2	7.400	89	16	37
	Beam 3	7.400	89	16	37
	Beam 4	7.400	89	16	37
	Beam 5	7.400	89	16	37
	Beam 6	7.400	89	16	37
	Total	37.000			

Bent 7 N 0 13' 39.11" W
Distance between Station Line and Girder 1 0.500 R
Girder Spancing (C.L. Bent — Beam Angle

			D	M	S
Span 6	Beam 1	0.000	89	16	37
	Beam 2	7.400	89	16	37
	Beam 3	7.400	89	16	37
	Beam 4	7.400	89	16	37
	Beam 5	7.400	89	16	37
	Beam 6	7.400	89	16	37
	Total	37.000			

GIRDER REPORT

Beam Report Span 4

	Horizontal Distance C-C Bent	C-C Bearing	True Distance Bot. BM. FLG	Girder Slope
Beam 1	122.482	116.148	117.651	-0.007
Beam 2	122.274	115.940	117.443	-0.007
Beam 3	122.067	115.733	117.235	-0.007
Beam 4	121.859	115.525	117.023	-0.007
Beam 5	121.652	115.318	116.820	-0.007
Beam 6	121.444	115.110	116.613	-0.007

Beam Report Span 5

	Horizontal Distance C-C Bent	C-C Bearing	True Distance Bot. BM. FLG	Girder Slope
Beam 1	75.900	69.567	71.068	0.006
Beam 2	75.772	69.438	70.940	0.006
Beam 3	75.643	69.309	70.811	0.006
Beam 4	75.514	69.181	70.682	0.006
Beam 5	75.386	69.052	70.554	0.006
Beam 6	75.257	68.924	70.425	0.006

Beam Report Span 6

	Horizontal Distance C-C Bent	C-C Bearing	True Distance Bot. BM. FLG	Girder Slope
Beam 1	110.194	103.861	105.367	0.011
Beam 2	110.008	103.674	105.180	0.011
Beam 3	109.821	103.487	104.994	0.011
Beam 4	109.634	103.300	104.807	0.011
Beam 5	109.447	103.114	104.620	0.011
Beam 6	109.261	102.927	104.433	0.011

STATE OF TEXAS
RAMKUMAR KOZHIKOTE
103166
LICENSED PROFESSIONAL ENGINEER

HL-93 LOADING

Ramkumar Kozhikote 4/11/2011

REV. No.	DATE	REVISION	BY
△			
△			
△			

PBSJ an Atkins company TBPE REG. # F-474

Texas Department of Transportation
Austin District
©2011 by TxDOT

SH 45 / O'CONNOR DRIVE WB FRONTAGE RD I-GIRDER LAYOUT (SPANS 4-6)

SCALE: 1"=30' SHEET 2 OF 6

DESIGNED: AMG	FED. RD DIV. No.	STATE	PROJECT No.			HIGHWAY No.	
CHECKED: AUS	6	TEXAS				LP 1/SH 45	
DRAWN: DEW	STATE DISTRICT	COUNTY	CONTROL No.	SECTION No.	JOB No.	SHEET No.	
CHECKED: AUS	AUSTIN	WILLIAMSON	0683	06	027	475	

DATE: 4/11/2011 TIME: 10:38:54 AM
PLOT DRIVER: RD*11x17*PDF.plt
PEN TABLE: plotordr*ocon.tbl
FILE: r:\trans-design\o'connor\odd\bdg\wbfr\OC45GLwbfr02.dgn

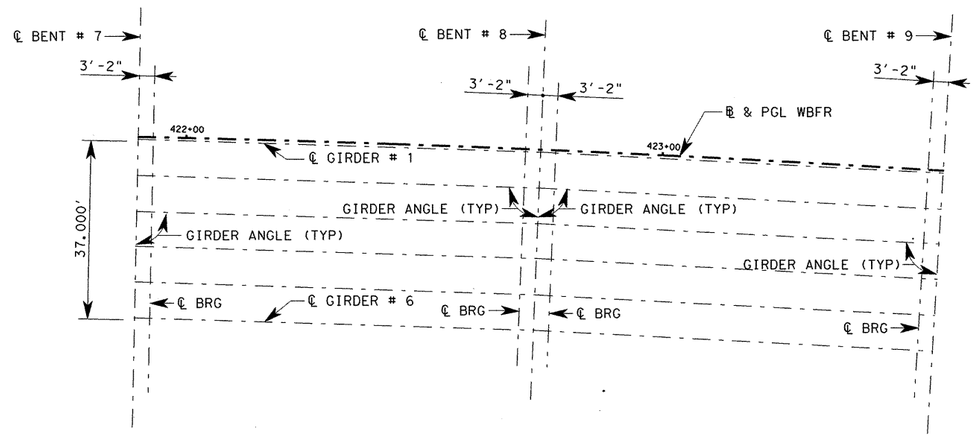

SPAN # 7

(TY Tx54 GIRDERS)

SPAN # 8

(TY Tx54 GIRDERS)

① GIRDER LENGTHS SHOWN ARE BOTTOM GIRDER FLANGE LENGTHS WITH ADJUSTMENTS MADE FOR GIRDER SLOPE.

BENT REPORT

Bent 7 N 0 13' 39.11" W
Distance between Station Line and Girder 1

		Girder Spancing (C.L. Bent	D	M	S
		0.500 R Beam Angle			
Span 7	Beam 1	0.000	89	26	46
	Beam 2	7.400	89	26	46
	Beam 3	7.400	89	26	46
	Beam 4	7.400	89	26	46
	Beam 5	7.400	89	26	46
	Beam 6	7.400	89	26	46
	Total	37.000			

Bent 8 N 0 52' 48.82" E
Distance between Station Line and Girder 1

		Girder Spancing (C.L. Bent	D	M	S
		0.500 R Beam Angle			
Span 7	Beam 1	0.000	89	26	46
	Beam 2	7.400	89	26	46
	Beam 3	7.400	89	26	46
	Beam 4	7.400	89	26	46
	Beam 5	7.400	89	26	46
	Beam 6	7.400	89	26	46
	Total	37.000			

Bent 8 N 0 52' 48.82" E
Distance between Station Line and Girder 1

		Girder Spancing (C.L. Bent	D	M	S
		0.500 R Beam Angle			
Span 8	Beam 1	0.000	89	26	45
	Beam 2	7.400	89	26	45
	Beam 3	7.400	89	26	45
	Beam 4	7.400	89	26	45
	Beam 5	7.400	89	26	45
	Beam 6	7.400	89	26	45
	Total	37.000			

Bent 9 N 1 59' 18.64" E
Distance between Station Line and Girder 1

		Girder Spancing (C.L. Bent	D	M	S
		0.500 R Beam Angle			
Span 8	Beam 1	0.000	89	26	45
	Beam 2	7.400	89	26	45
	Beam 3	7.400	89	26	45
	Beam 4	7.400	89	26	45
	Beam 5	7.400	89	26	45
	Beam 6	7.400	89	26	45
	Total	37.000			

GIRDER REPORT

Beam Report Span 7

	Horizontal Distance C-C Bent	C-C Bearing	True Distance Bot. BM. FLG	Girder Slope
Beam 1	84.409	78.075	79.580	0.011
Beam 2	84.266	77.932	79.436	0.010
Beam 3	84.123	77.789	79.292	0.009
Beam 4	83.980	77.646	79.148	0.008
Beam 5	83.837	77.503	79.005	0.006
Beam 6	83.694	77.360	78.861	0.005

Beam Report Span 8

	Horizontal Distance C-C Bent	C-C Bearing	True Distance Bot. BM. FLG	Girder Slope
Beam 1	84.449	78.115	79.620	0.011
Beam 2	84.306	77.972	79.476	0.010
Beam 3	84.163	77.829	79.332	0.009
Beam 4	84.020	77.686	79.188	0.008
Beam 5	83.876	77.543	79.044	0.006
Beam 6	83.733	77.400	78.901	0.005

STATE OF TEXAS
RAMKUMAR KOZHIKOTE
103166
LICENSED PROFESSIONAL ENGINEER

Ramkumar Kozhikote
4/11/2011

HL-93 LOADING

REV. No.	DATE	REVISION	BY
△			
△			
△			

PBSJ
an Atkins company
TBPE REG. # F-474

Texas Department of Transportation
Austin District
©2011 by TxDOT

SH 45 / O'CONNOR DRIVE
WB FRONTAGE RD
I-GIRDER LAYOUT
(SPANS 7-8)

SCALE: 1"=30'

SHEET 3 OF 6

DESIGNED: AMG	FED. RD DIV. No.	STATE	PROJECT No.			HIGHWAY No.	
CHECKED: AUS	6	TEXAS				LP 1/SH 45	
DRAWN: DEW	STATE DISTRICT	COUNTY		CONTROL No.	SECTION No.	JOB No.	SHEET No.
CHECKED: AUS	AUSTIN	WILLIAMSON		0683	06	027	476

DATE: 4/11/2011 TIME: 10:38:57 AM

PLOT DRIVER: RD*11x17*PDF.plt
PEN TABLE: plotordr*ocon.tbl
FILE: r:\trans-design\o'connor\cadd\bdg\wbfr\OC45GLwbfr03.dgn

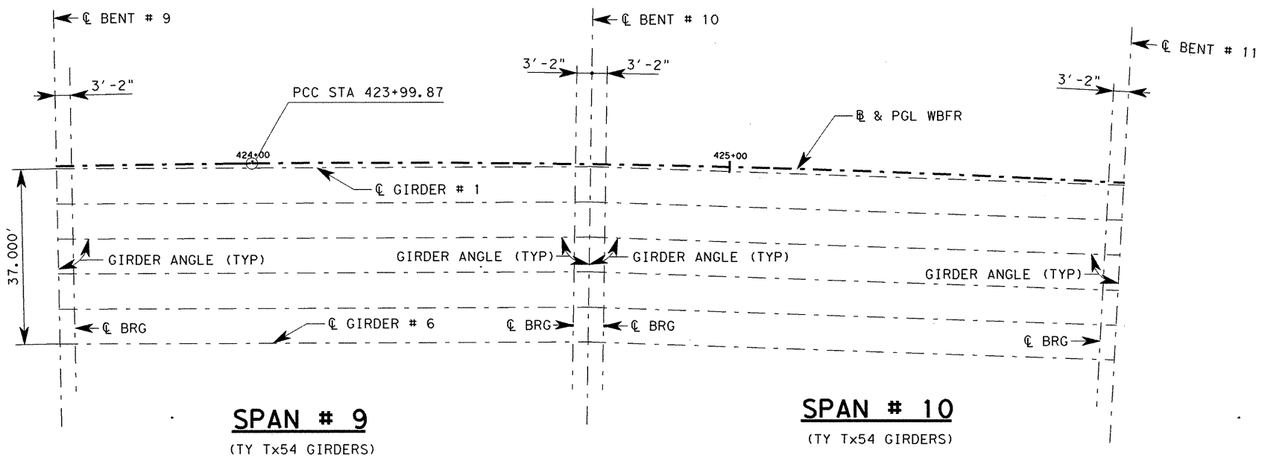

① BEAM LENGTHS SHOWN ARE BOTTOM BEAM FLANGE LENGTHS WITH ADJUSTMENTS MADE FOR BEAM SLOPE.

BENT REPORT

Bent 9 N 1° 59' 18.95" W

Distance between Station Line and Girder 1 0.500 R

		Girder Spancing (C.L. Bent	Girder Angle D	M	S
Span 9	Girder 1	0.000	89°	07'	04
	Girder 2	7.400	89°	07'	04
	Girder 3	7.400	89°	07'	05
	Girder 4	7.400	89°	07'	06
	Girder 5	7.400	89°	07'	07
	Girder 6	7.400	89°	07'	07
	Total	37.000			

Bent 10 N 3° 55' 25.75" W

Distance between Station Line and Girder 1 0.500 R

		Girder Spancing (C.L. Bent	Girder Angle D	M	S
Span 10	Girder 1	0.000	88°	53'	52
	Girder 2	7.400	88°	53'	52
	Girder 3	7.400	88°	53'	52
	Girder 4	7.400	88°	53'	52
	Girder 5	7.400	88°	53'	52
	Girder 6	7.400	88°	53'	52
	Total	37.000			

Bent 10 N 3° 55' 25.75" W

Distance between Station Line and Girder 1 0.500 R

		Girder Spancing (C.L. Bent	Girder Angle D	M	S
Span 9	Girder 1	0.000	88°	56'	49
	Girder 2	7.400	88°	56'	49
	Girder 3	7.400	88°	56'	48
	Girder 4	7.400	88°	56'	47
	Girder 5	7.400	88°	56'	47
	Girder 6	7.400	88°	56'	46
	Total	37.000			

Bent 11 N 6° 07' 41.95" W

Distance between Station Line and Girder 1 0.500 R

		Girder Spancing (C.L. Bent	Girder Angle D	M	S
Span 10	Girder 1	0.000	88°	53'	52
	Girder 2	7.400	88°	53'	52
	Girder 3	7.400	88°	53'	52
	Girder 4	7.400	88°	53'	52
	Girder 5	7.400	88°	53'	52
	Girder 6	7.400	88°	53'	52
	Total	37.000			

GIRDER REPORT

Girder Reprt Span 9

	Horizontal Distance C-C Bent	C-C Bearing	True Distance Bot. BM. FLG	Girder Slope
Girder 1	111.978	105.643	107.148	0.009
Girder 2	111.728	105.393	106.897	0.008
Girder 3	111.478	105.143	106.646	0.007
Girder 4	111.228	104.893	106.395	0.006
Girder 5	110.978	104.643	106.145	0.005
Girder 6	110.728	104.394	105.894	0.003

Girder Reprt Span 10

	Horizontal Distance C-C Bent	C-C Bearing	True Distance Bot. BM. FLG	Girder Slope
Girder 1	111.974	105.639	107.140	0.000
Girder 2	111.689	105.355	106.855	0.000
Girder 3	111.404	105.070	106.570	0.000
Girder 4	111.120	104.785	106.285	-0.001
Girder 5	110.835	104.500	106.001	-0.001
Girder 6	110.550	105.216	105.716	-0.001

STATE OF TEXAS
RAMKUMAR KOZHIKOTE
103166
LICENSED
PROFESSIONAL ENGINEER

HL-93 LOADING

Ramkumar Kozhikote 4/11/2011

REV. No.	DATE	REVISION	BY
△			
△			
△			

PBSJ
an Atkins company TBPE REG. # F-474

Texas Department of Transportation
Austin District
©2011 by TxDOT

SH 45 / O'CONNOR DRIVE
WB FRONTAGE RD
I-GIRDER LAYOUT
(SPANS 9-10)

SCALE: 1"=30' SHEET 4 OF 6

DESIGNED: AMG	FED. RD DIV. No.	STATE	PROJECT No.			HIGHWAY No.	
CHECKED: AUS	6	TEXAS				LP 1/SH 45	
DRAWN: DEW	STATE DISTRICT	COUNTY		CONTROL No.	SECTION No.	JOB No.	SHEET No.
CHECKED: AUS	AUSTIN	WILLIAMSON		0683	06	027	477

DATE: 4/11/2011 TIME: 10:38:59 AM
PLOT DRIVER: RD*11x17*PDF.plt
PEN TABLE: plotordr*ocon.tbl
FILE: r:\trans-design\o'connor\cadd\bdg\wbfr\0045GLwbfr04.dgn

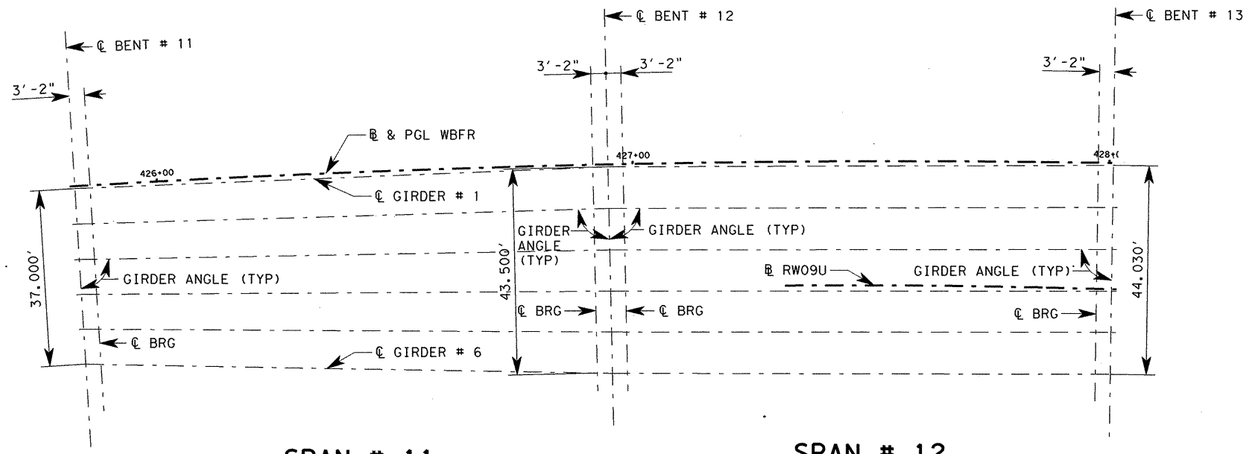

SPAN # 11

(TY Tx54 GIRDERS)

SPAN # 12

(TY Tx54 GIRDERS)

① GIRDER LENGTHS SHOWN ARE BOTTOM GIRDER FLANGE LENGTHS WITH ADJUSTMENTS MADE FOR GIRDER SLOPE.

BENT REPORT

BENT REPORT

Bent 11 N 6° 07′ 41.95″ W

Distance between Station Line and Girder 1 0.500 R

		Girder Spancing (C.L. Bent	Girder Angle D	M	S
Span 11	Girder 1	0.000	88°	53′	52
	Girder 2	7.400	88°	13′	51
	Girder 3	7.400	87°	33′	38
	Girder 4	7.400	86°	53′	12
	Girder 5	7.400	86°	12′	35
	Girder 6	7.400	85°	31′	47
	Total	37.000			

Bent 12 N 8° 19′ 58.14″ W

Distance between Station Line and Girder 1 0.500 R

		Girder Spancing (C.L. Bent	Girder Angle D	M	S
Span 11	Girder 1	0.000	88°	53′	52
	Girder 2	8.700	89°	33′	53
	Girder 3	8.700	90°	14′	06
	Girder 4	8.700	90°	54′	32
	Girder 5	8.700	91°	35′	09
	Girder 6	8.700	92°	15′	57
	Total	43.500			
Span 12	Girder 1	0.000	88°	57′	24
	Girder 2	8.700	88°	53′	58
	Girder 3	8.700	88°	50′	30
	Girder 4	8.700	88°	47′	01
	Girder 5	8.700	88°	43′	30
	Girder 6	8.700	88°	39′	58
	Total	43.500			

Bent 13 N 10° 25′ 9.19″ W

Distance between Station Line and Girder 1 0.500 R

		Girder Spancing (C.L. Bent	Girder Angle D	M	S
Span 12	Girder 1	0.000	88°	57′	24
	Girder 2	8.806	89°	00′	51
	Girder 3	8.806	89°	04′	19
	Girder 4	8.806	89°	07′	48
	Girder 5	8.806	89°	11′	19
	Girder 6	8.806	89°	14′	51
	Total	44.030			

GIRDER REPORT

Girder Reprt Span 11

	Horizontal Distance C-C Bent	C-C Bearing	True Distance Bot. BM. FLG	Girder Slope
Girder 1	111.974	105.639	107.145	-0.010
Girder 2	111.672	105.337	106.843	-0.010
Girder 3	111.385	105.048	106.555	-0.011
Girder 4	111.113	104.779	106.282	-0.011
Girder 5	110.857	104.515	106.024	-0.011
Girder 6	110.616	104.271	105.780	-0.011

Girder Reprt Span 12

	Horizontal Distance C-C Bent	C-C Bearing	True Distance Bot. BM. FLG	Girder Slope
Girder 1	105.976	99.641	101.160	-0.019
Girder 2	105.657	99.323	100.842	-0.020
Girder 3	105.339	99.004	100.523	-0.020
Girder 4	105.020	98.686	100.205	-0.020
Girder 5	104.702	98.367	99.887	-0.020
Girder 6	104.384	98.049	99.568	-0.020

STATE OF TEXAS
RAMKUMAR KOZHIKOTE
103166
LICENSED
PROFESSIONAL ENGINEER

Ramkumar Kozhikote
4/11/2011

HL-93 LOADING

REV. No.	DATE	REVISION	BY
△			
△			
△			

PBSJ
an Atkins company
TBPE REG. # F-474

Texas Department of Transportation
Austin District
©2011 by TxDOT

SH 45 / O'CONNOR DRIVE WB FRONTAGE RD I-GIRDER LAYOUT (SPANS 11-12)

SCALE: 1"=30′ SHEET 5 OF 6

DESIGNED: AMG	FED. RD DIV. No.	STATE	PROJECT No.		HIGHWAY No.	
CHECKED: AUS	6	TEXAS			LP 1/SH 45	
DRAWN: DEW	STATE DISTRICT	COUNTY	CONTROL No.	SECTION No.	JOB No.	SHEET No.
CHECKED: AUS	AUSTIN	WILLIAMSON	0683	06	027	478

DATE: 4/11/2011 TIME: 10:39:01 AM
PLOT DRIVER: RD*11x17*PDF.plt
PEN TABLE: plotordr*ocon.tbl
FILE: r:\trans-design\o'connor\cadd\bdg\wbfr\0C45GLwbfr05.dgn

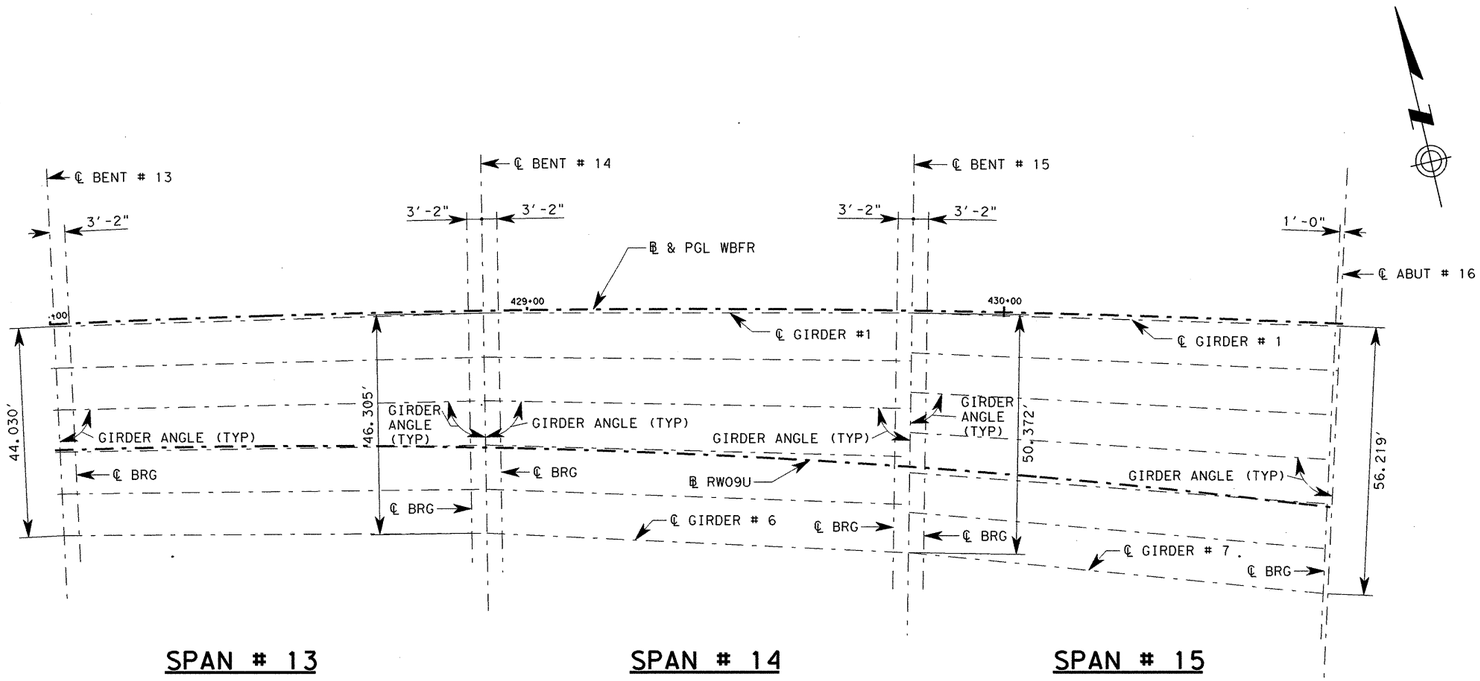

(1) GIRDER LENGTHS SHOWN ARE BOTTOM GIRDER FLANGE LENGTHS WITH ADJUSTMENTS MADE FOR GIRDER SLOPE.

BENT REPORT

BENT REPORT

Bent 13 N 10° 25' 9.19" W

Distance between Station Line and Girder 1 0.500 R

		Girder Spancing (C.L. Bent	Girder Angle D	M	S
Span 13	Girder 1	0.000	89°	06'	51
	Girder 2	8.806	88°	49'	25
	Girder 3	8.806	88°	31'	52
	Girder 4	8.806	88°	14'	12
	Girder 5	8.806	87°	56'	26
	Girder 6	8.806	87°	38'	34
	Total	44.030			

Bent 14 N 12° 11' 26.49" W

Distance between Station Line and Girder 1 0.500 R

		Girder Spancing (C.L. Bent	Girder Angle D	M	S
Span 13	Girder 1	0.000	89°	06'	51
	Girder 2	9.261	89°	24'	18
	Girder 3	9.261	89°	41'	51
	Girder 4	9.261	89°	59'	30
	Girder 5	9.261	90°	17'	16
	Girder 6	9.261	90°	35'	09
	Total	46.305			
Span 14	Girder 1	0.000	89°	06'	51
	Girder 2	9.261	88°	35'	41
	Girder 3	9.261	88°	04'	18
	Girder 4	9.261	87°	32'	44
	Girder 5	9.261	87°	00'	57
	Girder 6	9.261	86°	28'	59
	Total	46.305			

Bent 15 N 13° 57' 43.79" W

Distance between Station Line and Girder 1 0.500 R

		Girder Spancing (C.L. Bent	Girder Angle D	M	S
Span 14	Girder 1	0.000	89°	06'	51
	Girder 2	10.074	89°	38'	02
	Girder 3	10.074	90°	09'	25
	Girder 4	10.074	90°	40'	59
	Girder 5	10.074	91°	12'	46
	Girder 6	10.074	91°	44'	44
	Total	50.370			
Span 15	Girder 1	0.000	89°	06'	53
	Girder 2	8.395	88°	29'	32
	Girder 3	8.395	87°	51'	57
	Girder 4	8.395	87°	14'	09
	Girder 5	8.395	86°	36'	08
	Girder 6	8.395	85°	57'	56
	Girder 7	8.395	85°	19'	33
	Total	50.370			

Abut 16 N 15° 43' 56.83" W

Distance between Station Line and Girder 1 0.500 R

		Girder Spancing (C.L. Bent	Girder Angle D	M	S
Span 15	Girder 1	0.000	89°	06'	53
	Girder 2	9.370	89°	44'	15
	Girder 3	9.370	90°	21'	50
	Girder 4	9.370	90°	59'	38
	Girder 5	9.370	91°	37'	38
	Girder 6	9.370	92°	15'	51
	Girder 7	9.370	92°	54'	14
	Total	56.220			

GIRDER REPORT

Girder Reprt Span 13

	Horizontal Distance C-C Bent	C-C Bearing	True Distance Bot. BM. FLG	Girder Slope
Girder 1	89.981	83.647	85.171	-0.024
Girder 2	89.703	83.369	84.893	-0.024
Girder 3	89.427	83.093	84.617	-0.024
Girder 4	89.154	82.819	84.344	-0.025
Girder 5	88.882	82.547	84.072	-0.025
Girder 6	88.614	82.278	83.803	-0.025

Girder Reprt Span 14

	Horizontal Distance C-C Bent	C-C Bearing	True Distance Bot. BM. FLG	Girder Slope
Girder 1	89.981	83.647	85.171	-0.024
Girder 2	89.686	83.351	84.876	-0.024
Girder 3	89.398	83.063	84.588	-0.025
Girder 4	89.118	82.781	84.307	-0.025
Girder 5	88.845	82.507	84.034	-0.025
Girder 6	88.580	82.239	83.767	-0.026

Girder Reprt Span 15

	Horizontal Distance C-C Bent	C-C Bearing	True Distance Bot. BM. FLG	Girder Slope
Girder 1	89.921	85.754	87.272	-0.021
Girder 2	89.652	85.484	87.003	-0.021
Girder 3	89.393	85.224	86.745	-0.022
Girder 4	89.146	84.975	86.496	-0.022
Girder 5	88.909	84.736	86.258	-0.022
Girder 6	88.683	84.507	86.031	-0.023
Girder 7	88.468	84.289	85.814	-0.023

STATE OF TEXAS
RAMKUMAR KOZHIKOTE
103166
LICENSED
PROFESSIONAL ENGINEER

HL-93 LOADING

Ramkumar Kozhikote 4/11/2011

REV. No.	DATE	REVISION	BY
△			
△			
△			

PBSJ
an Atkins company
TBPE REG. # F-474

Texas Department of Transportation
Austin District
©2011 by TxDOT

SH 45 / O'CONNOR DRIVE
WB FRONTAGE RD
I-GIRDER LAYOUT
(SPANS 13-15)

SCALE: 1"=30' SHEET 6 OF 6

DESIGNED: AMG	FED. RD DIV. No.	STATE	PROJECT No.			HIGHWAY No.
CHECKED: AUS	6	TEXAS				LP 1/SH 45
DRAWN: DEW	STATE DISTRICT	COUNTY	CONTROL No.	SECTION No.	JOB No.	SHEET No.
CHECKED: AUS	AUSTIN	WILLIAMSON	0683	06	027	479

DATE: 4/11/2011 TIME: 10:39:04 AM
PLOT DRIVER: RD*11x17*PDF.plt
PEN TABLE: plotordr*ocon.tbl
FILE: r:\trans-design\o'connor\cadd\bdg\wbfr\OC45GLwbfr06.dgn

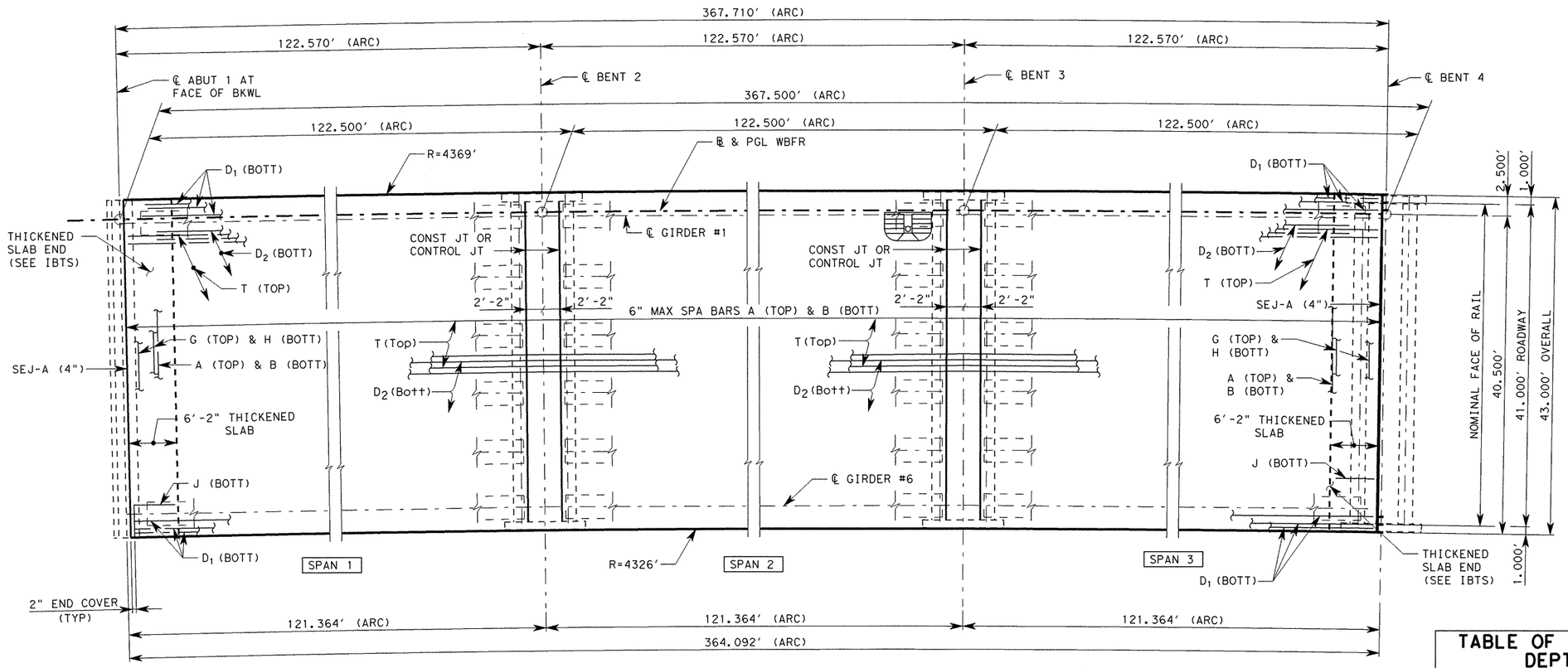

PLAN

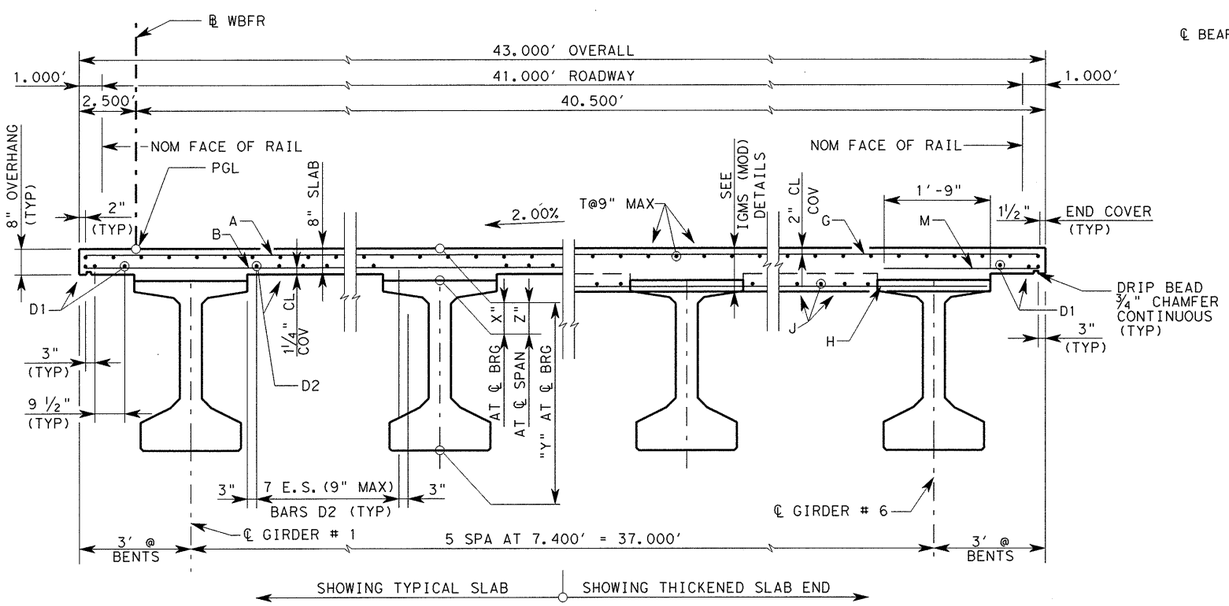

TYPICAL RADIAL SECTION

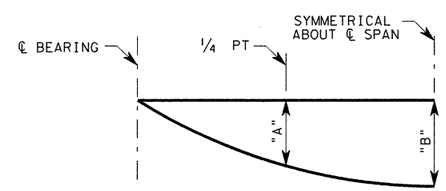

NOTE: DEFLECTIONS SHOWN ARE DUE TO CONCRETE SLAB ONLY. (E_c = 5 x 10^6 PSI) CALCULATED DEFLECTIONS SHOWN ARE THEORETICAL. ACTUAL DIMENSIONS MAY BE LESS. DEFLECTIONS SHALL BE ADJUSTED BASED ON FIELD OBSERVATIONS

DEAD LOAD DEFLECTION DIAGRAM

TABLE OF ESTIMATED QUANTITIES

SPAN	REINF CONCRETE SLAB	① PRESTR CONCRETE GIRDERS (TY Tx54)	CLASS "S" CONCRETE	② TOTAL REINF STEEL
	SF	LF	CY	LB
1	5,245	716	143.7	34,090
2	5,245	703	143.1	34,090
3	5,245	703	144.1	34,090
TOTAL	15,735	2,122	430.9	102,270

① LENGTHS SHOWN ARE BOTTOM FLANGE LENGTHS WITH ADJUSTMENTS MADE FOR GIRDER SLOPE.

② REINFORCING STEEL WEIGHT IS CALCULATED USING AN APPROXIMATE FACTOR OF 6.5 LB/SF.

GENERAL NOTES:

1. DESIGNED ACCORDING TO AASHTO LRFD BRIDGE DESIGN SPECIFICATIONS, 4TH EDITION 2007 AND CURRENT INTERIMS FOR HL-93 LOADING.
2. SEE IGMS (MOD) STANDARD FOR THICKENED SLAB END DETAIL AND QUANTITY ADJUSTMENT
3. ~~THE USE OF PRECAST PANELS IS NOT ALLOWED.~~ △1
4. ALL REINFORCING SHOULD BE GRADE 60.
5. CONCRETE STRENGTH F′C = 4,000 PSI
6. BAR LAPS, WHERE REQUIRED, SHALL BE AS FOLLOWS:
   #4 = 1′-5"
   #5 = 1′-9"
7. SEE MISC. SLAB DETAILS FOR REINFORCING OVER BENTS
8. FOR DECK DRAIN LOCATION AND REINFORCEMENT DETAILS, SEE BRIDGE LAYOUT SHEETS AND BRIDGE DRAIN DETAIL SHEETS.

TABLE OF SECTION DEPTHS

SPAN NO.	"X" AT ℄ BRG	"Y" AT ℄ BRG	"Z" AT ℄ SPAN
1	11"	5′-5"	9 ¼"
2	11"	5′-5"	9 ¼"
3	11"	5′-5"	9 ¼"

SPAN NO	GIRDER NO	"A"	"B"
1	1-6	0.145′	0.207′
2	1-6	0.145′	0.207′
3	1-6	0.145′	0.207′

BAR TABLE

BAR	SIZE
A	#5
B	#5
D	#5
G	#5
H	#5
J	#5
M	#5
T	#4
U	#4

Ramkumar Kozhikote June 21, 2011

STATE OF TEXAS
RAMKUMAR KOZHIKOTE
103166
LICENSED PROFESSIONAL ENGINEER

HL-93 LOADING

REV. No.	DATE	REVISION	BY
△1	Rev. 6/29/11		
△			
△			

PBSJ an Atkins company TBPE REG. # F-474

Texas Department of Transportation Austin District

©2011 by TxDOT

SH 45 / O'CONNOR DRIVE WB FRONTAGE RD 367.50′ PRESTRESS CONC I-GIRDER UNIT (SPANS 1-3)

SCALE: NTS SHEET 1 OF 6

DESIGNED: AMG	FED. RD DIV. No.	STATE	PROJECT No.	HIGHWAY No.
CHECKED: AUS	6	TEXAS		LP 1/SH 45

DRAWN: DEW	STATE DISTRICT	COUNTY	CONTROL No.	SECTION No.	JOB No.	SHEET No.
CHECKED: RK	AUSTIN	WILLIAMSON	0683	06	027	480

Rev. 6/29/11

TIME: 2:16:36 PM
DATE: 6/2/2011

PLOT DRIVER: RD*11x17*PDF.plt
PEN TABLE: plotordr*ocon.tbl
FILE: r:\trans-design\o'connor\cadd\bdg\wbfr\OC45GSwbfr01.dgn

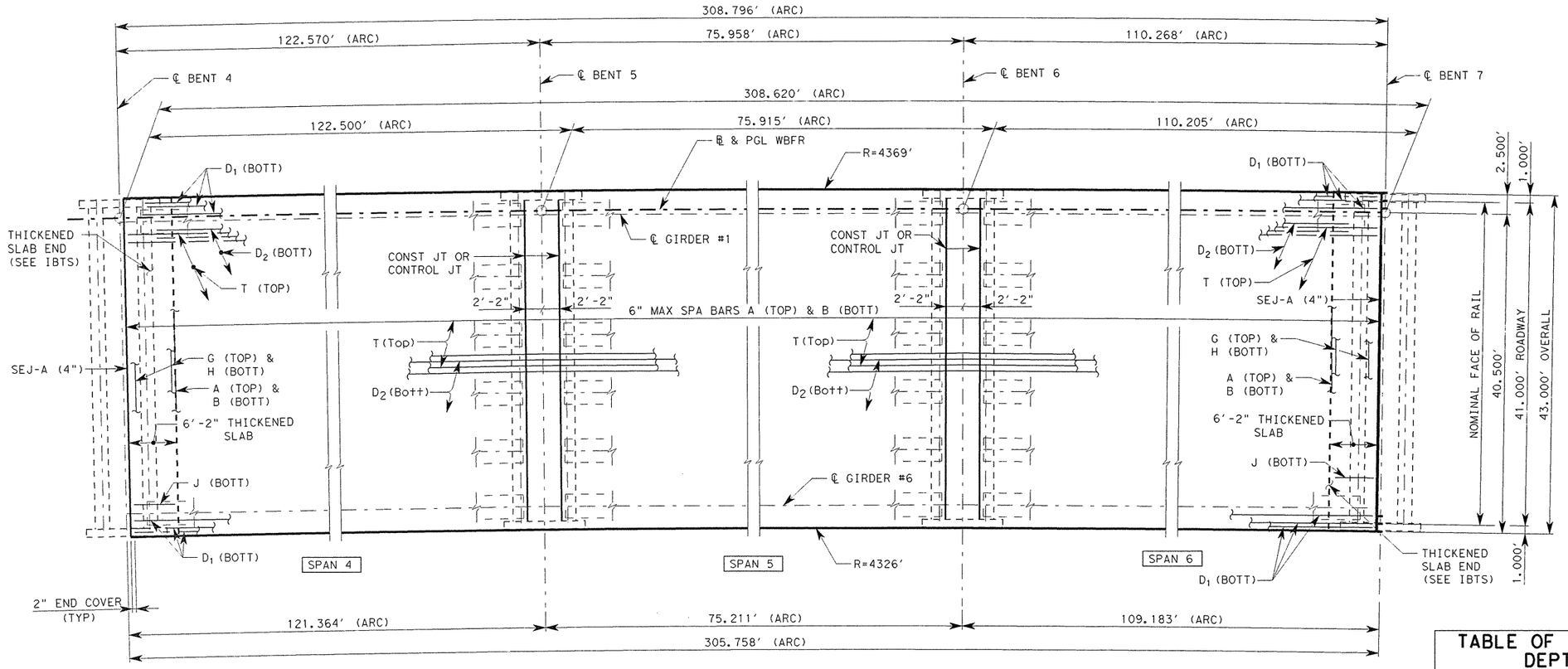

PLAN

TABLE OF ESTIMATED QUANTITIES

SPAN	REINF CONCRETE SLAB	①PRESTR CONCRETE GIRDERS (TY Tx54)	CLASS "S" CONCRETE	② TOTAL REINF STEEL
	SF	LF	CY	LB
4	5,245	703	143.9	34,090
5	3,250	425	88.3	21,125
6	4,718	629	129.5	30,670
TOTAL	13,213	1,758	361.7	85,885

① LENGTHS SHOWN ARE BOTTOM FLANGE LENGTHS WITH ADJUSTMENTS MADE FOR GIRDER SLOPE.

② REINFORCING STEEL WEIGHT IS CALCULATED USING AN APPROXIMATE FACTOR OF 6.5 LB/SF.

GENERAL NOTES:

1. DESIGNED ACCORDING TO AASHTO LRFD BRIDGE DESIGN SPECIFICATIONS, 4TH EDITION 2007 AND CURRENT INTERIMS FOR HL-93 LOADING.
2. SEE IGMS (MOD) STANDARD FOR THICKENED SLAB END DETAIL AND QUANTITY ADJUSTMENT
3. ~~THE USE OF PRECAST PANELS IS NOT ALLOWED.~~ △1
4. ALL REINFORCING SHOULD BE GRADE 60.
5. CONCRETE STRENGTH F'C = 4,000 PSI
6. BAR LAPS, WHERE REQUIRED, SHALL BE AS FOLLOWS:
   #4 = 1'-5"
   #5 = 1'-9"
7. SEE MISC. SLAB DETAILS FOR REINFORCING OVER BENTS
8. FOR DECK DRAIN LOCATION AND REINFORCEMENT DETAILS, SEE BRIDGE LAYOUT SHEETS AND BRIDGE DRAIN DETAIL SHEETS.

TABLE OF SECTION DEPTHS

SPAN NO.	"X" AT ℄ BRG	"Y" AT ℄ BRG	"Z" AT ℄ SPAN
4	11"	5'-5"	9 1/4"
5	11"	5'-5"	9 1/4"
6	11 1/4"	5'-5"	9 1/4"

SPAN NO	GIRDER NO	"A"	"B"
4	1-6	0.145'	0.207'
5	1-6	0.145'	0.207'
6	1-6	0.145'	0.207'

Ramkumar Kozhikote
June 2, 2011

STATE OF TEXAS
RAMKUMAR KOZHIKOTE
103166
LICENSED
PROFESSIONAL ENGINEER

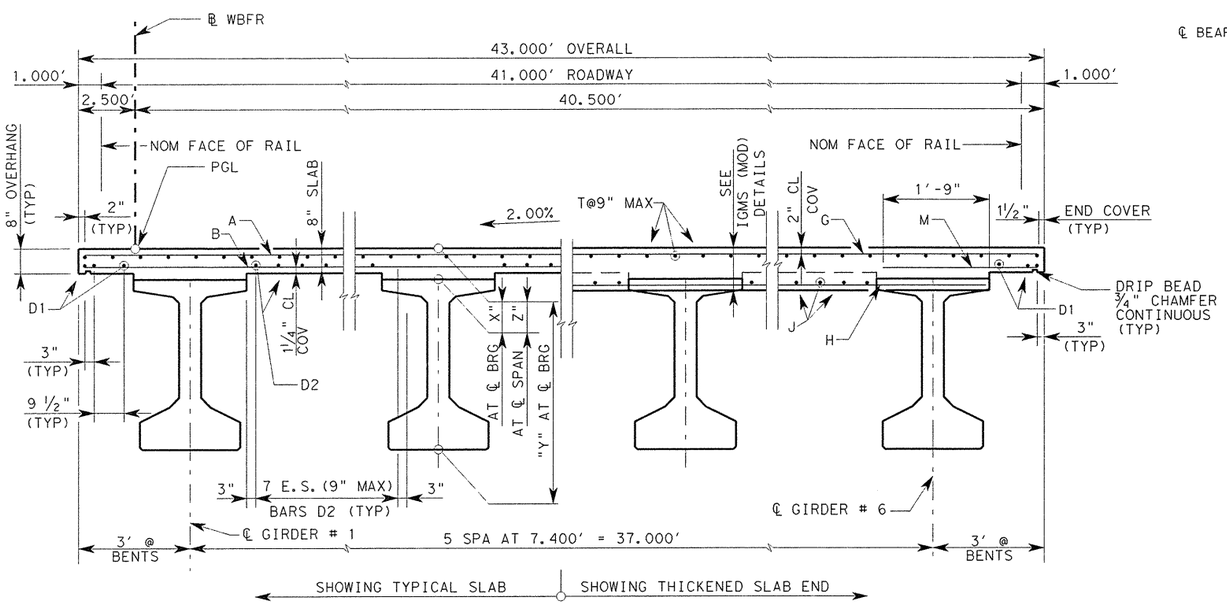

TYPICAL RADIAL SECTION

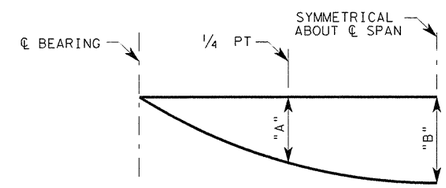

NOTE: DEFLECTIONS SHOWN ARE DUE TO CONCRETE SLAB ONLY. ($E_c = 5 \times 10^6$ PSI) CALCULATED DEFLECTIONS SHOWN ARE THEORETICAL. ACTUAL DIMENSIONS MAY BE LESS. DEFLECTIONS SHALL BE ADJUSTED BASED ON FIELD OBSERVATIONS

DEAD LOAD DEFLECTION DIAGRAM

BAR	SIZE
A	#5
B	#5
D	#5
G	#5
H	#5
J	#5
M	#5
T	#4
U	#4

HL-93 LOADING

REV. NO.	DATE	REVISION	BY
△1	Rev. 6/29/11		
△			
△			

PBSJ an Atkins company TBPE REG. # F-474

Texas Department of Transportation Austin District

©2011 by TxDOT

SH 45 / O'CONNOR DRIVE
WB FRONTAGE RD
308.62' PRESTRESS
CONC I-GIRDER UNIT
(SPANS 4-6)

SCALE: NTS — SHEET 2 OF 6

DESIGNED: AMO	FED. RD DIV. No.	STATE	PROJECT No.			HIGHWAY No.
CHECKED: AUS	6	TEXAS				LP 1/SH 45
DRAWN: DEW	STATE DISTRICT	COUNTY	CONTROL No.	SECTION No.	JOB No.	SHEET No.
CHECKED: RK	AUSTIN	WILLIAMSON	0683	06	027	481

Rev. 6/29/11

DATE: 6/2/2011 TIME: 2:16:39 PM
PLOT DRIVER: RD*11x17*PDF.plt
PEN TABLE: plotordr*ocon.tbl
FILE: r:\trans-design\o'connor\cadd\bdg\wbfr\OC45GSwbfr02.dgn

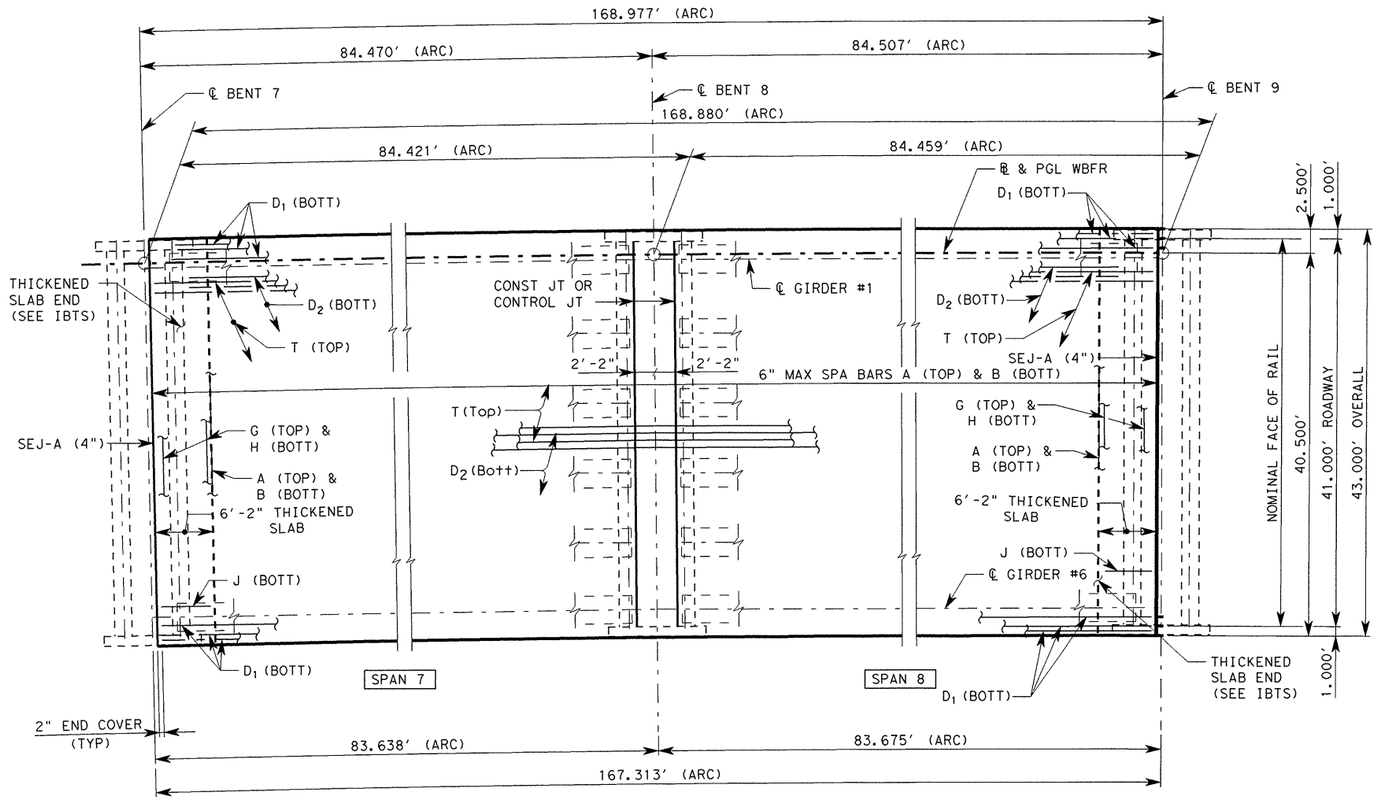

PLAN

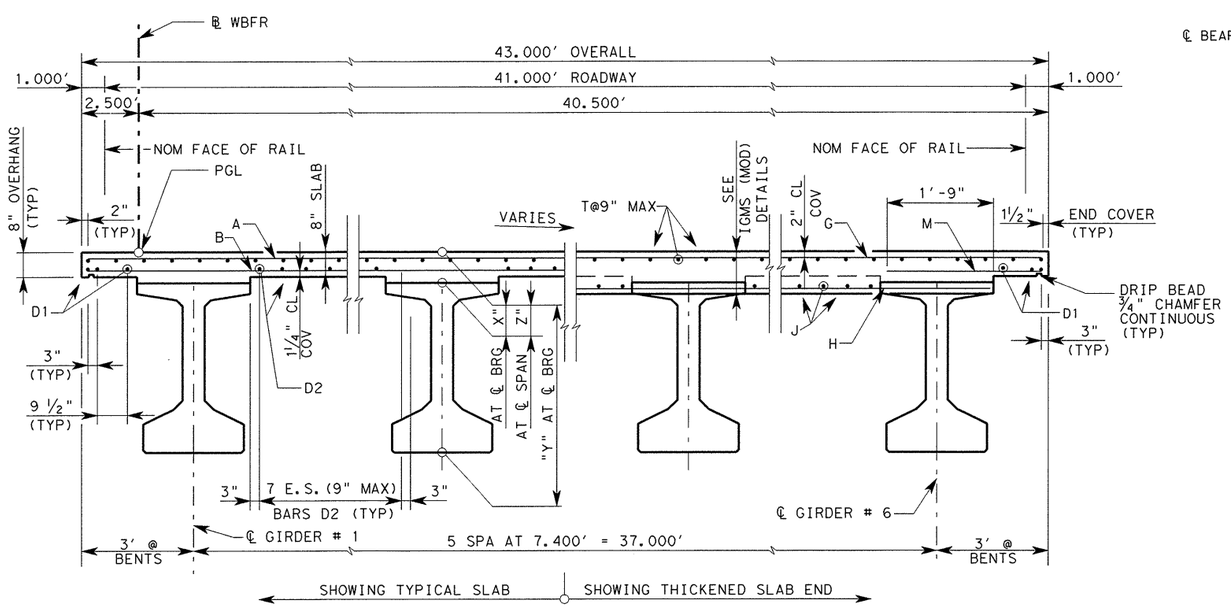

TYPICAL RADIAL SECTION

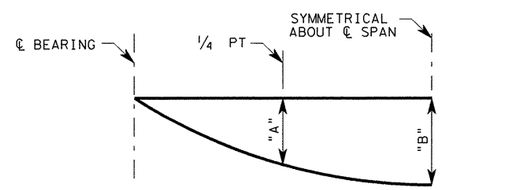

NOTE: DEFLECTIONS SHOWN ARE DUE TO CONCRETE SLAB ONLY. ($E_c = 5 \times 10^6$ PSI) CALCULATED DEFLECTIONS SHOWN ARE THEORETICAL. ACTUAL DIMENSIONS MAY BE LESS. DEFLECTIONS SHALL BE ADJUSTED BASED ON FIELD OBSERVATIONS

DEAD LOAD DEFLECTION DIAGRAM

TABLE OF ESTIMATED QUANTITIES

SPAN	REINF CONCRETE SLAB	① PRESTR CONCRETE GIRDERS (TY Tx54)	CLASS "S" CONCRETE	② TOTAL REINF STEEL
	SF	LF	CY	LB
7	3,614	475	99.4	23,493
8	3,616	476	99.5	23,504
TOTAL	7,230	951	198.9	46,997

① LENGTHS SHOWN ARE BOTTOM FLANGE LENGTHS WITH ADJUSTMENTS MADE FOR GIRDER SLOPE.

② REINFORCING STEEL WEIGHT IS CALCULATED USING AN APPROXIMATE FACTOR OF 6.5 LB/SF.

GENERAL NOTES:

1. DESIGNED ACCORDING TO AASHTO LRFD BRIDGE DESIGN SPECIFICATIONS, 4TH EDITION 2007 AND CURRENT INTERIMS FOR HL-93 LOADING.
2. SEE IGMS (MOD) STANDARD FOR THICKENED SLAB END DETAIL AND QUANTITY ADJUSTMENT
3. ~~THE USE OF PRECAST PANELS IS NOT ALLOWED.~~ △1
4. ALL REINFORCING SHOULD BE GRADE 60.
5. CONCRETE STRENGTH F'C = 4,000 PSI
6. BAR LAPS, WHERE REQUIRED, SHALL BE AS FOLLOWS:
   #4 = 1'-5"
   #5 = 1'-9"
7. SEE MISC. SLAB DETAILS FOR REINFORCING OVER BENTS
8. FOR DECK DRAIN LOCATION AND REINFORCEMENT DETAILS, SEE BRIDGE LAYOUT SHEETS AND BRIDGE DRAIN DETAIL SHEETS.

TABLE OF SECTION DEPTHS

SPAN NO.	"X" AT ℄ BRG	"Y" AT ℄ BRG	"Z" AT ℄ SPAN
7	11"	5'-4 ¼"	9 ¼"
8	10"	5'-4 ¼"	9 ¼"

SPAN NO	GIRDER NO	"A"	"B"
7	1-6	0.101'	0.143'
8	1-6	0.101'	0.143'

BAR TABLE

BAR	SIZE
A	#5
B	#5
D	#5
G	#5
H	#5
J	#5
M	#5
T	#4
U	#4

Ramkumar Kozhikote
June 2, 2011

STATE OF TEXAS
RAMKUMAR KOZHIKOTE
103166
LICENSED
PROFESSIONAL ENGINEER

HL-93 LOADING

REV. No.	DATE	REVISION	BY
△1	Rev. 6/29/11		
△			
△			

PBSJ an Atkins company TBPE REG. # F-474

Texas Department of Transportation Austin District

©2011 by TxDOT

SH 45 / O'CONNOR DRIVE WB FRONTAGE RD 168.88' PRESTRESS CONC I-GIRDER UNIT (SPANS 7-8)

SCALE: NTS

SHEET 3 OF 6

DESIGNED: AMG	FED. RD DIV. No.	STATE	PROJECT No.			HIGHWAY No.	
CHECKED: AUS	6	TEXAS				LP 1/SH 45	
DRAWN: DEW	STATE DISTRICT	COUNTY	CONTROL No.	SECTION No.	JOB No.	SHEET No.	
CHECKED: RK	AUSTIN	WILLIAMSON	0683	06	027	482	

Rev. 6/29/11

PLOT DRIVER: RD*11x17*PDF.plt
PEN TABLE: plotordr*ocon.tbl
FILE: r:\trans-design\o'connor\cadd\bdg\wbfr\0C45GSwbfr03.dgn
DATE: 6/2/2011 TIME: 2:16:42 PM

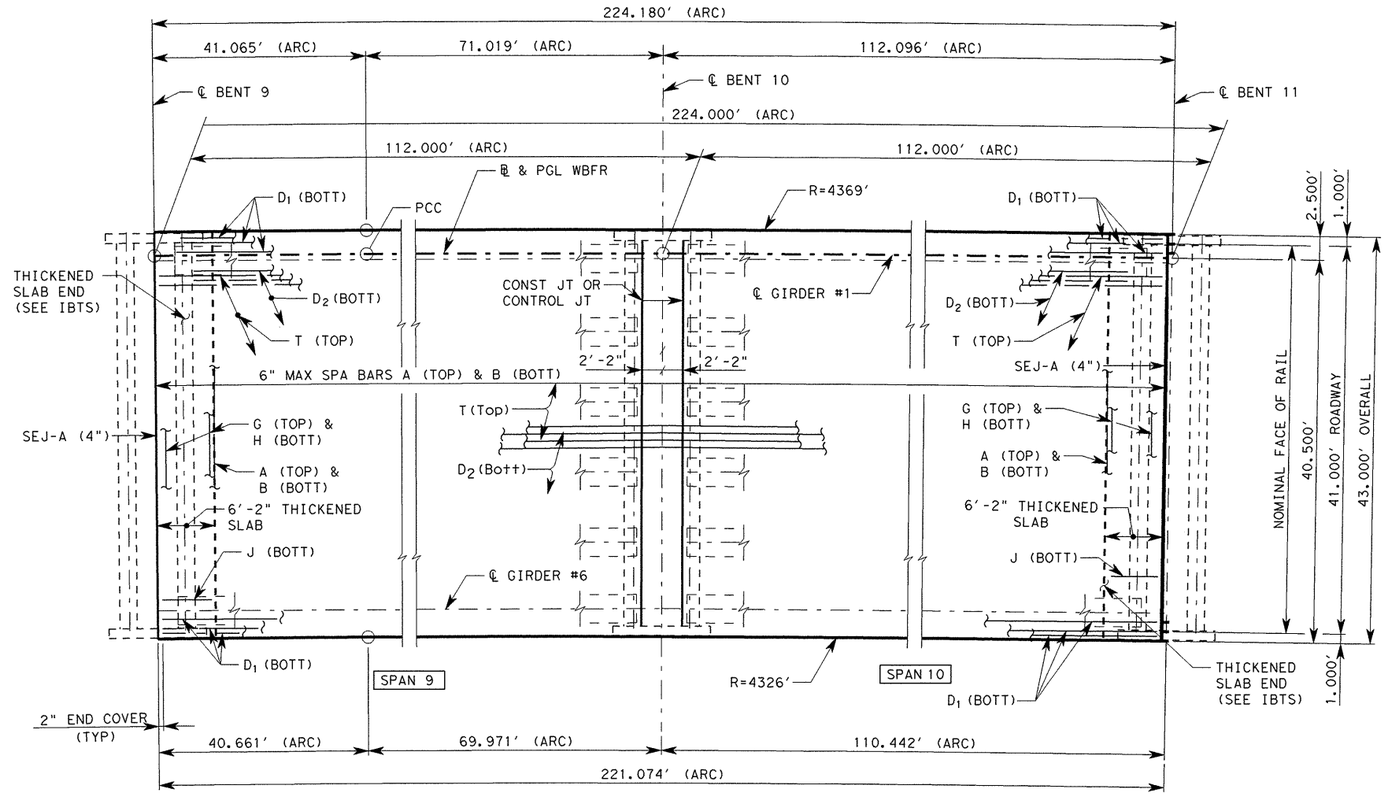

PLAN

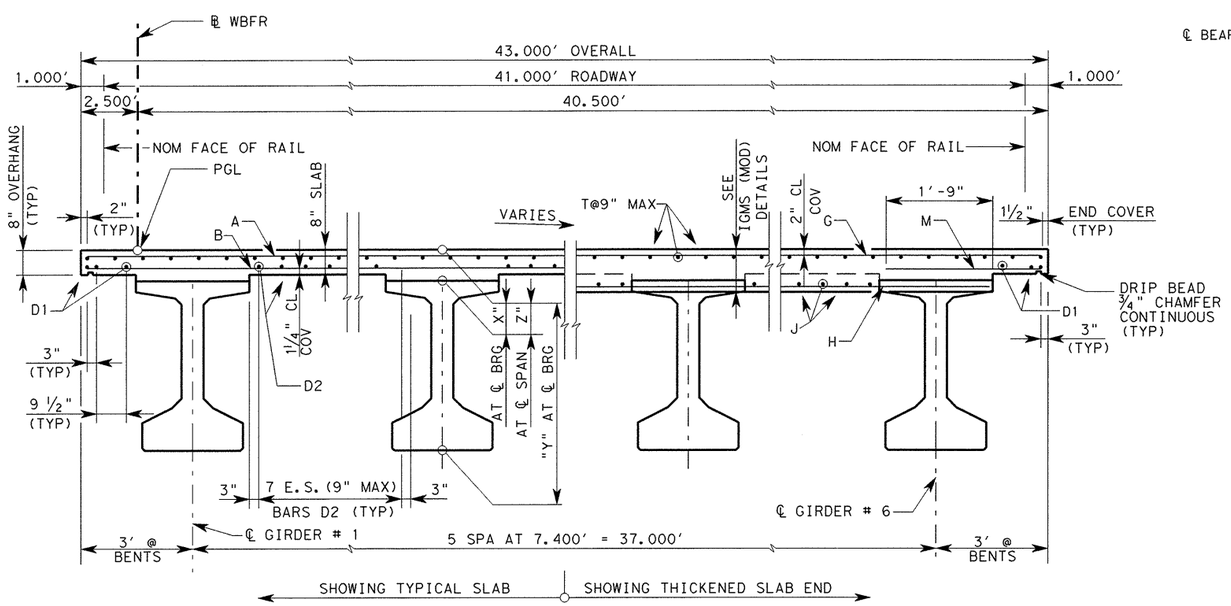

TYPICAL RADIAL SECTION

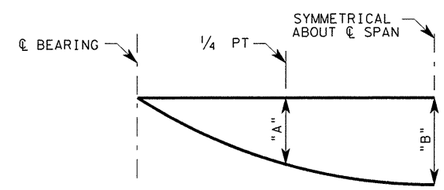

NOTE: DEFLECTIONS SHOWN ARE DUE TO CONCRETE SLAB ONLY. ($E_c = 5 \times 10^6$ PSI) CALCULATED DEFLECTIONS SHOWN ARE THEORETICAL. ACTUAL DIMENSIONS MAY BE LESS. DEFLECTIONS SHALL BE ADJUSTED BASED ON FIELD OBSERVATIONS

DEAD LOAD DEFLECTION DIAGRAM

TABLE OF ESTIMATED QUANTITIES

SPAN	REINF CONCRETE SLAB	① PRESTR CONCRETE GIRDERS (TY Tx54)	CLASS "S" CONCRETE	② TOTAL REINF STEEL
	SF	LF	CY	LB
9	4,788	639	131.5	31,125
10	4,785	639	131.3	31,100
TOTAL	9,573	1,278	262.8	62,225

① LENGTHS SHOWN ARE BOTTOM FLANGE LENGTHS WITH ADJUSTMENTS MADE FOR GIRDER SLOPE.

② REINFORCING STEEL WEIGHT IS CALCULATED USING AN APPROXIMATE FACTOR OF 6.5 LB/SF.

GENERAL NOTES:

1. DESIGNED ACCORDING TO AASHTO LRFD BRIDGE DESIGN SPECIFICATIONS, 4TH EDITION 2007 AND CURRENT INTERIMS FOR HL-93 LOADING.
2. SEE IGMS (MOD) STANDARD FOR THICKENED SLAB END DETAIL AND QUANTITY ADJUSTMENT
3. ~~THE USE OF PRECAST PANELS IS NOT ALLOWED.~~ △1
4. ALL REINFORCING SHOULD BE GRADE 60.
5. CONCRETE STRENGTH F'C = 4,000 PSI
6. BAR LAPS, WHERE REQUIRED, SHALL BE AS FOLLOWS:
   #4 = 1′-5"
   #5 = 1′-9"
7. SEE MISC. SLAB DETAILS FOR REINFORCING OVER BENTS
8. FOR DECK DRAIN LOCATION AND REINFORCEMENT DETAILS, SEE BRIDGE LAYOUT SHEETS AND BRIDGE DRAIN DETAIL SHEETS.

TABLE OF SECTION DEPTHS

SPAN NO.	"X" AT ℄ BRG	"Y" AT ℄ BRG	"Z" AT ℄ SPAN
9	10 ¼"	5′-4 ¼"	9 ¼"
10	10 ¼"	5′-4 ¼"	9 ¼"

SPAN NO	GIRDER NO	"A"	"B"
9	1-6	0.101′	0.143′
10	1-6	0.101′	0.143′

BAR TABLE

BAR	SIZE
A	#5
B	#5
D	#5
G	#5
H	#5
J	#5
M	#5
T	#4
U	#4

Ramkumar Kozhikote June 2, 2011

STATE OF TEXAS
RAMKUMAR KOZHIKOTE
103166
LICENSED PROFESSIONAL ENGINEER

HL-93 LOADING

REV. No.	DATE	REVISION	BY
△1	Rev. 6/29/11		
△			
△			

Rev. 6/29/11

PBSJ an Atkins company TBPE REG. # F-474

Texas Department of Transportation Austin District

©2011 by TxDOT

SH 45 / O'CONNOR DRIVE WB FRONTAGE RD 224.00′ PRESTRESS CONC I-GIRDER UNIT (SPANS 9-10)

SCALE: NTS SHEET 4 OF 6

DESIGNED: AMG	FED. RD DIV. No.	STATE	PROJECT No.			HIGHWAY No.
CHECKED: AUS	6	TEXAS				LP 1/SH 45
DRAWN: DEW	STATE DISTRICT	COUNTY	CONTROL No.	SECTION No.	JOB No.	SHEET No.
CHECKED: RK	AUSTIN	WILLIAMSON	0683	06	027	483

DATE: 6/2/2011 TIME: 2:16:45 PM
PLOT DRIVER: RD*11x17*PDF.plt
PEN TABLE: plotord*ocon.tbl
FILE: r:\trans-design\o'connor\oadd\bdg\wbfr\0C450SWbfr04.dgn

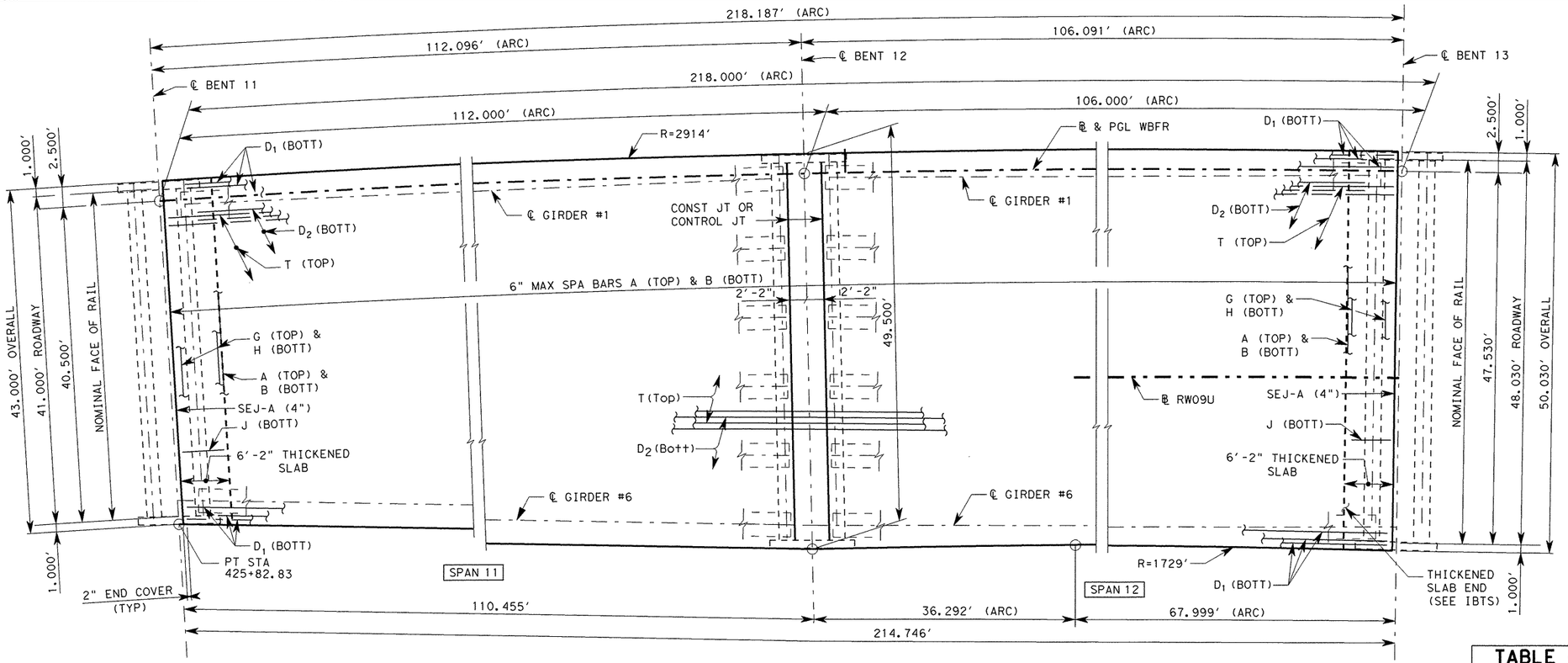

PLAN

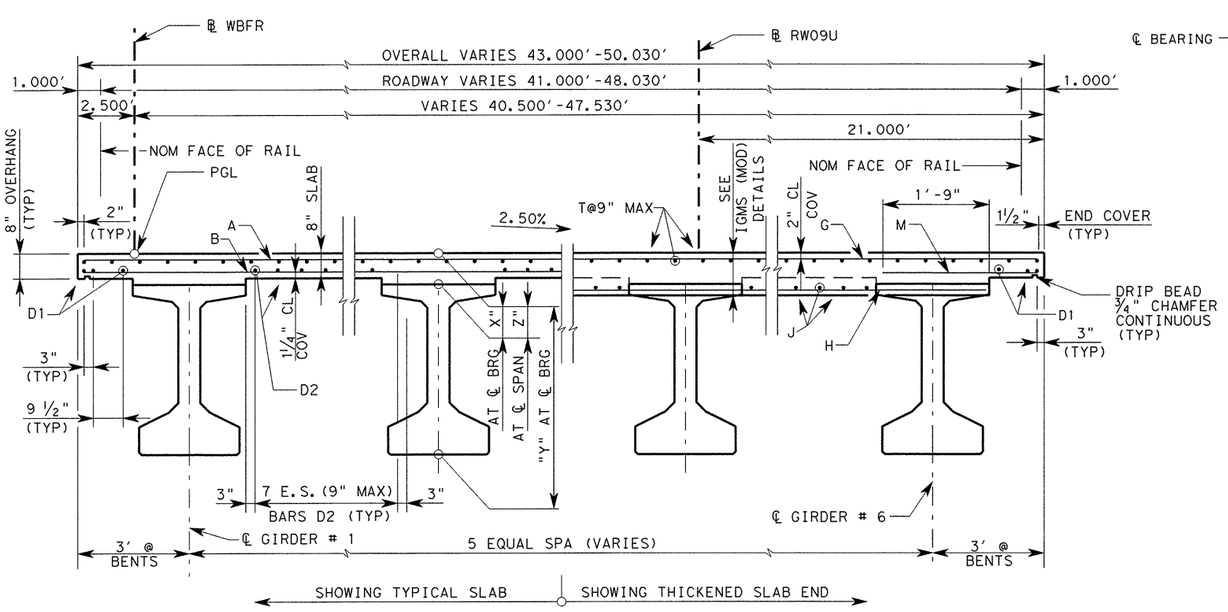

TYPICAL RADIAL SECTION

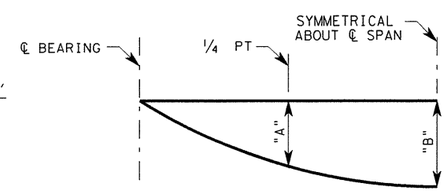

NOTE: DEFLECTIONS SHOWN ARE DUE TO CONCRETE SLAB ONLY. (E_c = 5 x 10^6 PSI) CALCULATED DEFLECTIONS SHOWN ARE THEORETICAL. ACTUAL DIMENSIONS MAY BE LESS. DEFLECTIONS SHALL BE ADJUSTED BASED ON FIELD OBSERVATIONS

DEAD LOAD DEFLECTION DIAGRAM

TABLE OF ESTIMATED QUANTITIES

SPAN	REINF CONCRETE SLAB	① PRESTR CONCRETE GIRDERS (TY Tx54)	CLASS "S" CONCRETE	② TOTAL REINF STEEL
	SF	LF	CY	LB
11	5,182	639	141.3	33,685
12	5,219	603	141.9	33,923
TOTAL	10,401	1,242	283.2	67,608

① LENGTHS SHOWN ARE BOTTOM FLANGE LENGTHS WITH ADJUSTMENTS MADE FOR GIRDER SLOPE.

② REINFORCING STEEL WEIGHT IS CALCULATED USING AN APPROXIMATE FACTOR OF 6.5 LB/SF.

GENERAL NOTES:

1. DESIGNED ACCORDING TO AASHTO LRFD BRIDGE DESIGN SPECIFICATIONS, 4TH EDITION 2007 AND CURRENT INTERIMS FOR HL-93 LOADING.
2. SEE IGMS (MOD) STANDARD FOR THICKENED SLAB END DETAIL AND QUANTITY ADJUSTMENT
3. ~~THE USE OF PRECAST PANELS IS NOT ALLOWED.~~ △1
4. ALL REINFORCING SHOULD BE GRADE 60.
5. CONCRETE STRENGTH F'C = 4,000 PSI
6. BAR LAPS, WHERE REQUIRED, SHALL BE AS FOLLOWS:
   #4 = 1'-5"
   #5 = 1'-9"
7. SEE MISC. SLAB DETAILS FOR REINFORCING OVER BENTS
8. FOR DECK DRAIN LOCATION AND REINFORCEMENT DETAILS, SEE BRIDGE LAYOUT SHEETS AND BRIDGE DRAIN DETAIL SHEETS.

TABLE OF SECTION DEPTHS

SPAN NO.	"X" AT ℄ BRG	"Y" AT ℄ BRG	"Z" AT ℄ SPAN
11	9 ¾"	5'-3 ¾"	9 ¼"
12	11"	5'-5"	9"

SPAN NO	GIRDER NO	"A"	"B"
11	1-6	0.112'	0.159'
12	1-6	0.083'	0.119'

BAR TABLE

BAR	SIZE
A	#5
B	#5
D	#5
G	#5
H	#5
J	#5
M	#5
T	#4
U	#4

Ramkumar Kozhikote
June 2, 2011

STATE OF TEXAS
RAMKUMAR KOZHIKOTE
103166
LICENSED PROFESSIONAL ENGINEER

HL-93 LOADING

REV. No.	DATE	REVISION	BY
△1	Rev. 6/29/11		
△			
△			

PBSJ an Atkins company TBPE REG. # F-474

Texas Department of Transportation
Austin District
©2011 by TxDOT

SH 45 / O'CONNOR DRIVE WB FRONTAGE RD 218.00' PRESTRESS CONC I-GIRDER UNIT (SPANS 11-12)

SCALE: NTS — SHEET 5 OF 6

DESIGNED: AMG	FED. RD DIV. No.	STATE	PROJECT No.			HIGHWAY No.	
CHECKED: AUS	6	TEXAS				LP 1/SH 45	
DRAWN: DEW	STATE DISTRICT	COUNTY	CONTROL No.	SECTION No.	JOB No.	SHEET No.	
CHECKED: RK	AUSTIN	WILLIAMSON	0683	06	027	484	

Rev. 6/29/11

TIME: 2:16:49 PM
DATE: 6/2/2011
PLOT DRIVER: RD*11x17*PDF.plt
PEN TABLE: plotordr*ocon.tbl
FILE: r:\trans-design\oconnor\cadd\bdg\wbfr\OC45GSwbfr05.dgn

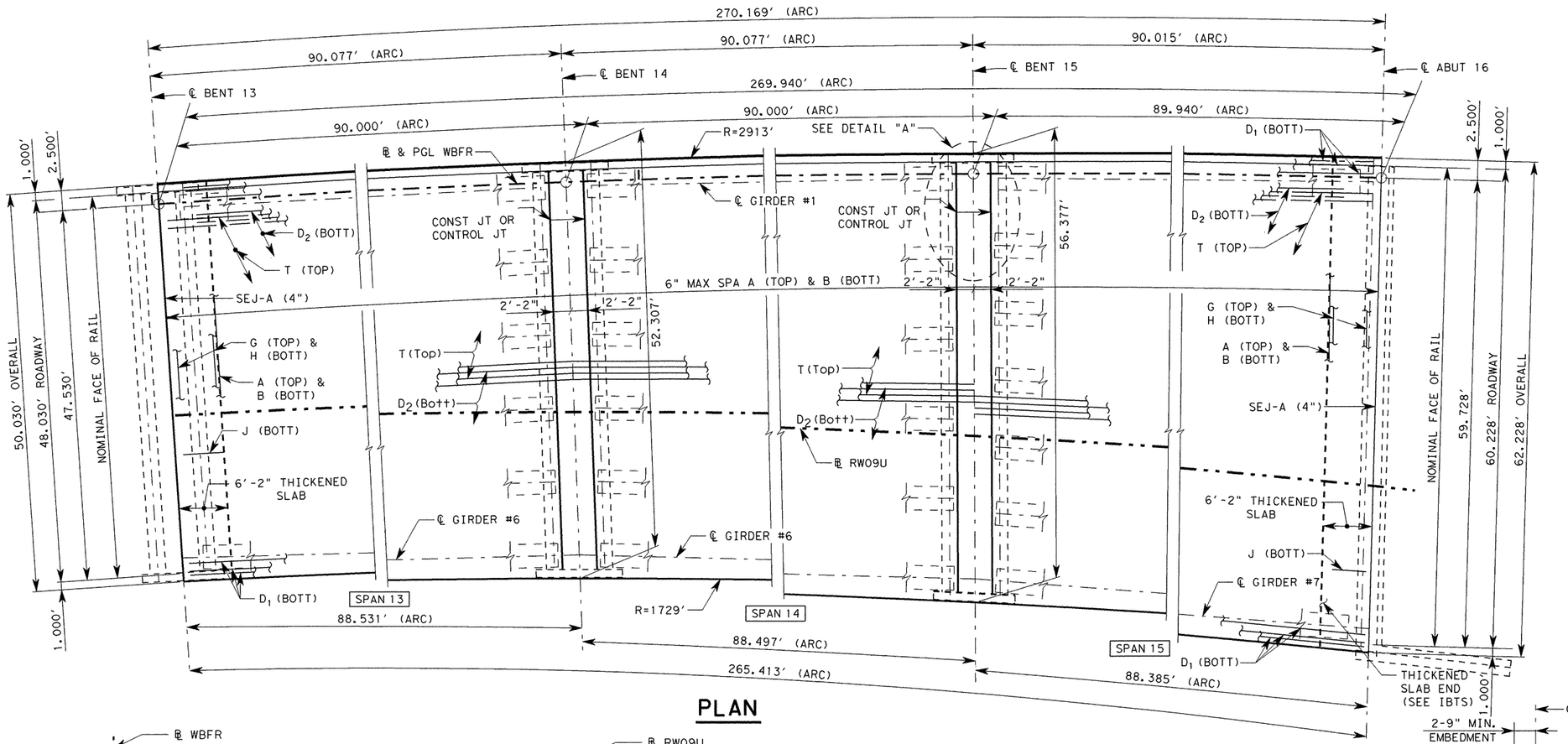

PLAN

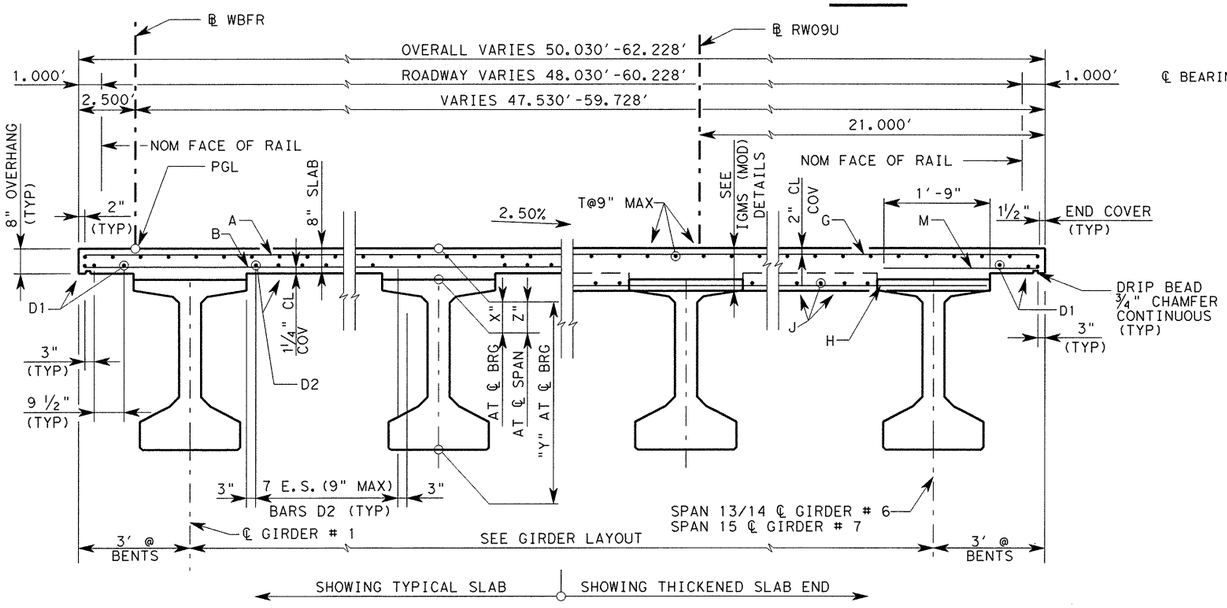

TYPICAL RADIAL SECTION

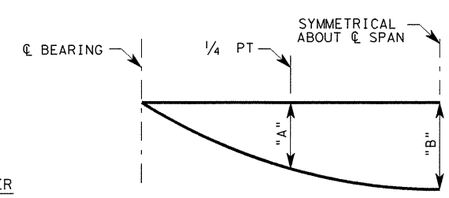

NOTE: DEFLECTIONS SHOWN ARE DUE TO CONCRETE SLAB ONLY. ($E_C = 5 \times 10^6$ PSI) CALCULATED DEFLECTIONS SHOWN ARE THEORETICAL. ACTUAL DIMENSIONS MAY BE LESS. DEFLECTIONS SHALL BE ADJUSTED BASED ON FIELD OBSERVATIONS

DEAD LOAD DEFLECTION DIAGRAM

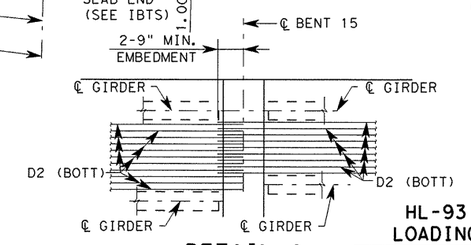

DETAIL A

HL-93 LOADING

BAR TABLE

BAR	SIZE
A	#5
B	#5
D	#5
G	#5
H	#5
J	#5
M	#5
T	#4
U	#4

TABLE OF SECTION DEPTHS

SPAN NO.	"X" AT ℄ BRG	"Y" AT ℄ BRG	"Z" AT ℄ SPAN
13	10 ¾"	5′-4 ¾"	9 ¼"
14	10 ¾"	5′-4 ¾"	9"
15	11 ¾"	5′-5 ¾"	9"

SPAN NO	GIRDER NO	"A"	"B"
13	1-6	0.052′	0.074′
14	1-6	0.055′	0.079′
15	1-7	0.057′	0.082′

Rev. 6/29/11

TABLE OF ESTIMATED QUANTITIES

SPAN	REINF CONCRETE SLAB	① PRESTR CONCRETE GIRDERS (TY Tx54)	CLASS "S" CONCRETE	② TOTAL REINF STEEL
	SF	LF	CY	LB
13	4,555	507	123.8	29,610
14	4,836	507	129.2	31,435
15	5,271	606	142.6	34,260
TOTAL	14,662	1,620	395.7	95,305

① LENGTHS SHOWN ARE BOTTOM FLANGE LENGTHS WITH ADJUSTMENTS MADE FOR GIRDER SLOPE.

② REINFORCING STEEL WEIGHT IS CALCULATED USING AN APPROXIMATE FACTOR OF 6.5 LB/SF.

GENERAL NOTES:

1. DESIGNED ACCORDING TO AASHTO LRFD BRIDGE DESIGN SPECIFICATIONS, 4TH EDITION 2007 AND CURRENT INTERIMS FOR HL-93 LOADING.
2. SEE IGMS (MOD) STANDARD FOR THICKENED SLAB END DETAIL AND QUANTITY ADJUSTMENT
3. ~~THE USE OF PRECAST PANELS IS NOT ALLOWED.~~ △1
4. ALL REINFORCING SHOULD BE GRADE 60.
5. CONCRETE STRENGTH F′C = 4,000 PSI
6. BAR LAPS, WHERE REQUIRED, SHALL BE AS FOLLOWS:
   #4 = 1′-5"
   #5 = 1′-9"
7. SEE MISC. SLAB DETAILS FOR REINFORCING OVER BENTS
8. FOR DECK DRAIN LOCATION AND REINFORCEMENT DETAILS, SEE BRIDGE LAYOUT SHEETS AND BRIDGE DRAIN DETAIL SHEETS.

Ramkumar Kozhikote
June 2, 2011

STATE OF TEXAS
RAMKUMAR KOZHIKOTE
103166
LICENSED
PROFESSIONAL ENGINEER

REV. No.	DATE	REVISION	BY
△1	Rev. 6/29/11		
△			
△			

PBSJ
an Atkins company
TBPE REG. # F-474

Texas Department of Transportation
Austin District
©2011 by TxDOT

SH 45 / O'CONNOR DRIVE WB FRONTAGE ROAD 269.70′ PRESTRESS CONC I-GIRDER UNIT (SPANS 13-15)

SCALE: NTS
SHEET 6 OF 6

DESIGNED: AMG	FED. RD. DIV.	FED. RD. No.	STATE	PROJECT No.			HIGHWAY No.
CHECKED: AUS	6		TEXAS				LP 1/SH 45
DRAWN: DEW	STATE DISTRICT		COUNTY	CONTROL No.	SECTION No.	JOB No.	SHEET No.
CHECKED: RK	AUSTIN		WILLIAMSON	0683	06	027	485

TIME: 2:16:52 PM
DATE: 6/2/2011
PLOT DRIVER: RD*11x17*PDF.pltr
PEN TABLE: plotordr*ocon.tbl
FILE: r:\trans-design\o'connor\cadd\bdg\WBFR\OC45GSwbfr06.dgn

DESIGNED GIRDERS (DEPRESSED STRANDS) / OPTIONAL DESIGN

STRUCTURE	SPAN NO.	GIRDER NO.	GIRDER TYPE	NON-STD STRAND PATTERN	PRESTRESSING STRANDS TOTAL NO.	SIZE (in)	STRGTH fpu (ksi)	"e" ℄ (in)	"e" END (in)	DEPRESSED NO.	DEPRESSED TO (in)	CONCRETE RELEASE STRGTH f'ci (ksi)	CONCRETE MINIMUM 28 DAY COMP STRGTH f'c (ksi)	DESIGN LOAD COMP STRESS (TOP ℄) (SERVICE I) fct(ksi)	DESIGN LOAD TENSILE STRESS (BOTT ℄) (SERVICE III) fcb(ksi)	REQUIRED MINIMUM ULTIMATE MOMENT CAPACITY (STRENGTH I) (ft-kips)	LIVE LOAD DISTRIB FACTOR (1)
WBFR	1 to 4	ALL	Tx54		68	½	270	16.83	9.42	14	50.5	6.3	7	4.417	-4.336	8365	0.598
	5	ALL	Tx54		20	½	270	20.41	20.01	4	6.5	4	5	1.514	-1.594	3439	0.688
	6	ALL	Tx54		46	½	270	18.66	11.36	8	50.5	4.6	5.1	3.316	-3.312	6593	0.620
	7	ALL	Tx54		22	½	270	20.28	19.19	4	10.5	4	5	1.929	-2.006	4211	0.668
	8	ALL	Tx54		22	½	270	20.28	19.19	4	10.5	4	5	1.895	-1.980	4177	0.668
	9 to 10	ALL	Tx54		52	½	270	18.24	12.09	8	48.5	5.3	5.7	3.711	-3.681	7208	0.613
	11	ALL	Tx54		54	½	270	18.12	11.90	8	50.5	5.5	5.8	3.711	-3.733	7372	0.665
	12	ALL	Tx54		50	½	270	18.37	11.97	8	48.5	5.1	5.5	3.484	-3.523	7079	0.715
	13	ALL	Tx54		32	½	270	19.63	17.01	6	20.5	4	5	2.523	-2.637	5485	0.764
	14	ALL	Tx54		34	½	270	19.48	15.60	6	28.5	4	5	2.581	-2.729	5716	0.802
	15	ALL	Tx54		34	½	270	19.48	15.60	6	28.5	4	5	2.620	-2.724	5637	0.750

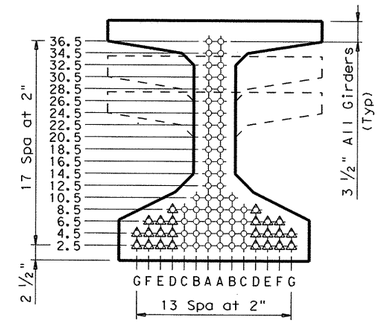

TYPE Tx28, Tx34 & Tx40 (2)

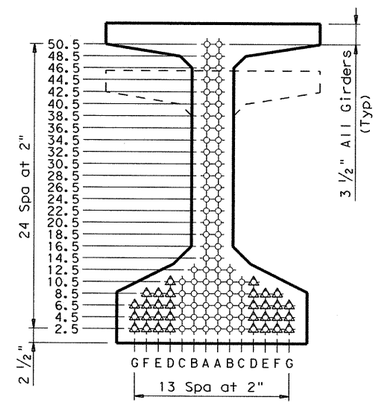

TYPE Tx46 & Tx54 (2)

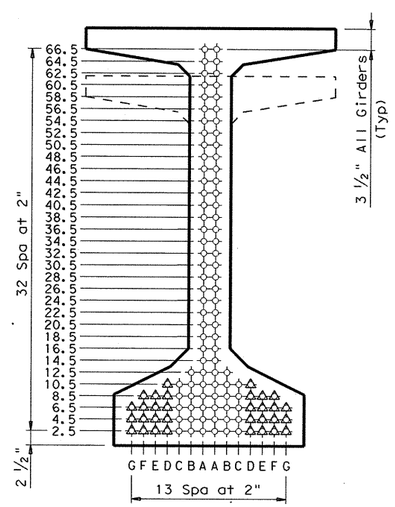

TYPE Tx62 & Tx70 (2)

(1) Portion of full HL93

(2) Full-length debonded strands are only permitted in strand positions marked △. Double wrap full-length debonded strands in outermost position of each row. Full-length debonding must comply with Item 426.4.F.4.

NON-STANDARD STRAND PATTERNS

PATTERN	STRAND ARRANGEMENT AT ℄ OF GIRDER

GENERAL NOTES:

Designed in accordance with AASHTO LRFD Specifications.

All concrete must be Class H. Provide Class H(HPC) if shown elsewhere in plans. All reinforcing bars must be Grade 60.

When shown on this sheet, the Fabricator has the option of furnishing either the designed depressed strand girder or an approved optional design. All optional design submittals must be signed, sealed and dated by a registered Professional Engineer.

Optional designs for girders 120 feet or longer must have a calculated residual camber equal to or greater than that of the designed girder.

Prestress losses for the designed girders have been calculated for a relative humidity of 65 percent. Optional designs must likewise conform.

For depressed strand designed girders, strands must be located as low as possible on the 2" grid system unless a Non-Standard Strand Pattern is indicated. Fill row "2.5", then row "4.5", then row "6.5", etc., beginning each row in the "A" position and working outward until the required number of strands is reached. All strands in the "A" position must be depressed, maintaining the 2" spacing so that, at the girder ends, the upper two strands are in the position shown in the table.

Strands for the designed girder must be low relaxation strands pretensioned to 75 percent of fpu each.

Seal cracks in girder ends exceeding 0.005" in width as directed by the Engineer. The fabricator is permitted to decrease the spacing of Bars R and S by providing additional bars to help limit crack width provided the decreased spacing results in no less than 1" clear between bars. The fabricator must take an approved corrective action if cracks greater than 0.005" form on a repetitive basis.

STATE OF TEXAS
RAMKUMAR KOZHIKOTE
103166
LICENSED
PROFESSIONAL ENGINEER

Ramkumar Kozhikote
4/11/2011

REV. No.	DATE	REVISION	BY
△			
△			
△			

PBSJ
an Atkins company TBPE REG. # F-474

Texas Department of Transportation
Austin District
©2011 by TxDOT

SH 45 / O'CONNOR DRIVE WB FRONTAGE RD PRESTRESSED CONCRETE I-GIRDER DESIGN (NON-STD SPNS)

DESIGNED: KD	FED. RD DIV. No.	STATE	PROJECT No.			HIGHWAY No.	
CHECKED: AUS.	6	TEXAS				LP 1/SH 45	
DRAWN: JF	STATE DISTRICT	COUNTY	CONTROL No.	SECTION No.	JOB No.	SHEET No.	
CHECKED: RK	AUSTIN	WILLIAMSON	0683	06	027	486	

DATE: 4/11/2011 TIME: 10:39:24 AM
PLOT DRIVER: RD*11x17*PDF.plt
PEN TABLE: plotordr*ocon.tbl
FILE: r:\trans-design\o'connor\cadd\bdg\wbfr\IGNDSTE1.dgn

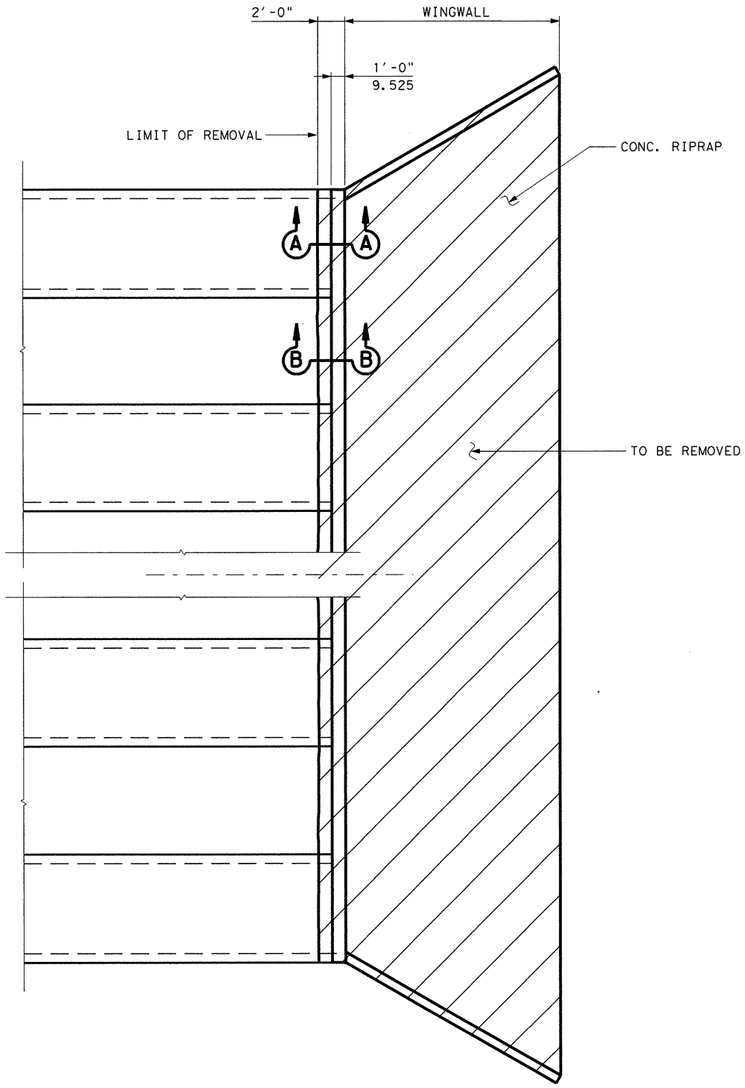

EXISTING BRIDGE CLASS CULVERT - PLAN

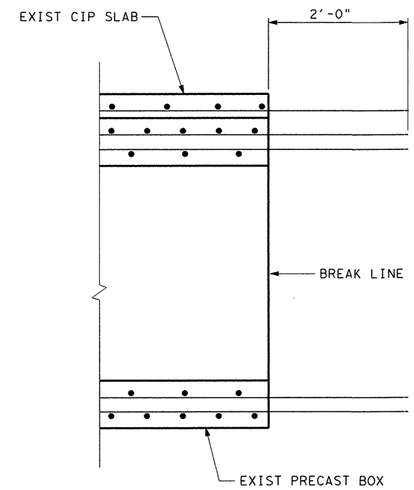

SECTION A-A

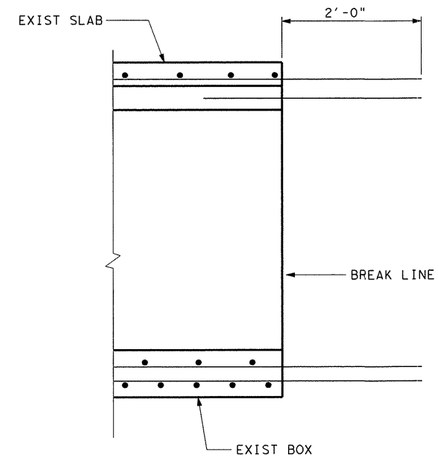

SECTION B-B

GENERAL NOTES:

1- CONTRACTOR SHALL BREAK BACK CONCRETE 2 FEET FROM FACE OF EXISTING CURB, STRAIGHTEN AND EXTEND EXISTING REINFORCEMENT 2'-0" INTO NEW CONSTRUCTION.
2- CONTRACTOR SHALL REMOVE AND CLEAR SITE PRIOR TO CONSTRUCTION.

STATE OF TEXAS
OSAMA A. SHAHAWY
88476
LICENSED
PROFESSIONAL ENGINEER
4/11/11

REV. No.	DATE	REVISION	BY
△			
△			
△			

PBSJ
an Atkins company
TBPE REG. # F-474

Texas Department of Transportation
Austin District
©2011 by TxDOT

SH 45 / O'CONNOR DRIVE BRIDGE CLASS CULVERT

CULVERT 2 DETAILS

SCALE: NTS
SHEET 1 OF 4

DESIGNED: MM	FED. RD DIV. No.	STATE	PROJECT No.		HIGHWAY No.	
CHECKED: GG	6	TEXAS			LP 1/SH 45	
DRAWN: KK	STATE DISTRICT	COUNTY	CONTROL No.	SECTION No.	JOB No.	SHEET No.
CHECKED: GG	AUSTIN	WILLIAMSON	0683	06	027	487

PLOT DRIVER: RD*11x17*PDF.plt
PEN TABLE: plotordr*ocon.tbl
FILE: r:\trans-design\o'connor\cadd\bdg\cul\0C45CLdet01.dgn
DATE: 4/11/2011 TIME: 10:39:26 AM

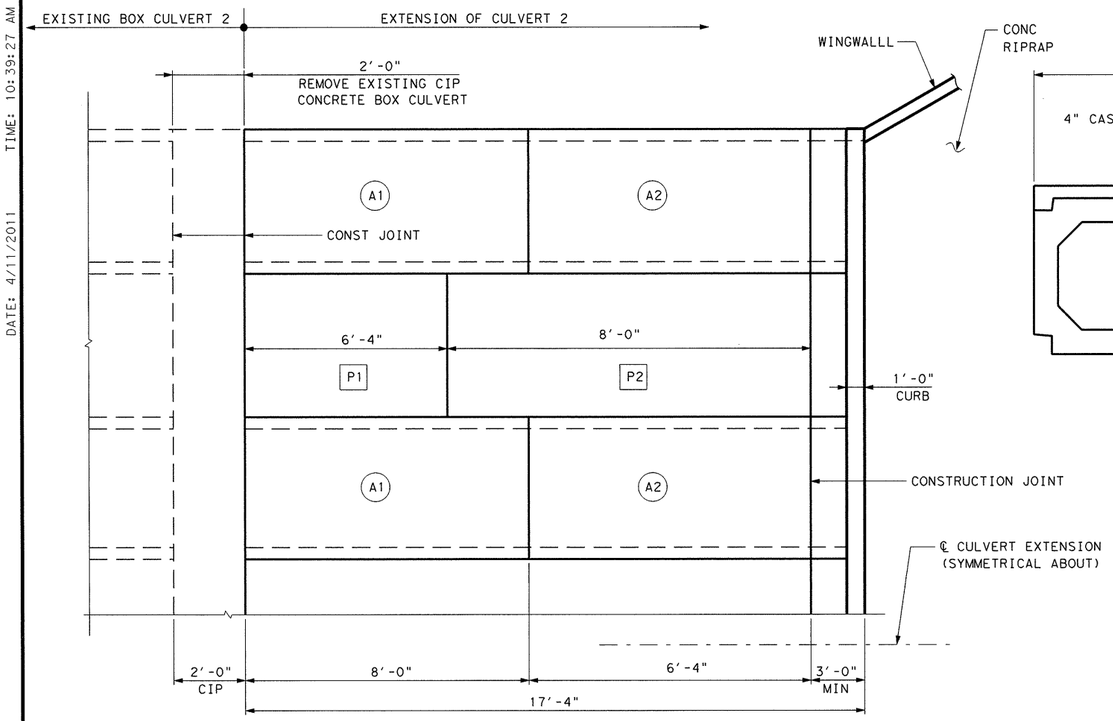

BOX CULVERT 2 EXTENSION - PLAN

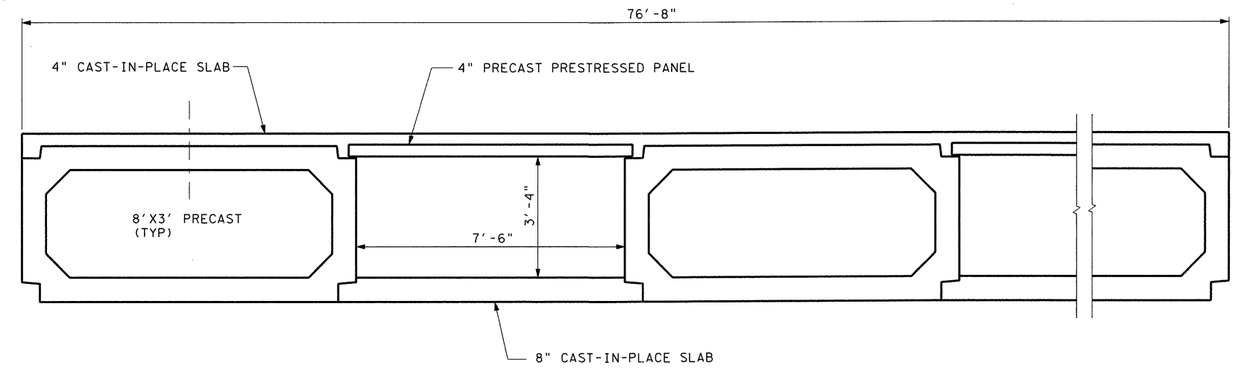

SECTION A-A

NTS

5-8.0'X3' PRECAST BOX CULVERT AND
4-7.5'X3.333' PRECAST PRESTRESSED
PANEL WITH 8" CAST-IN-PLACE SLAB

DENOTES BOX CULVERT

DENOTES PRECAST PRESTRESS PANEL.

* FOR CLOSURE CONCRETE, CURB AND TOEWALL, SEE "SW-0" STANDARD DETAIL.

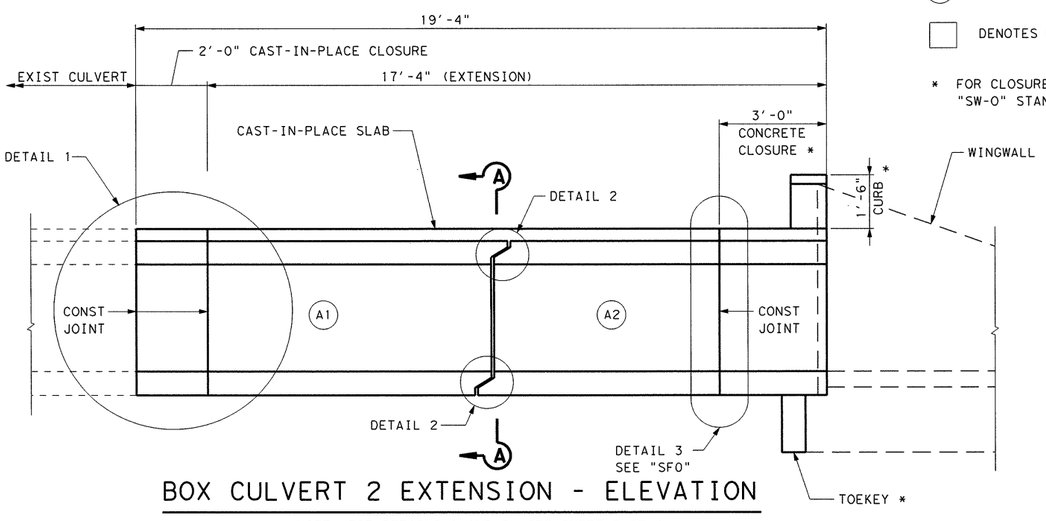

BOX CULVERT 2 EXTENSION - ELEVATION

NOTE: FOR DETAILS 1 AND 2, SEE SHEET 3 OF 4.

GENERAL NOTES:
DESIGNED ACCORDING TO AASHTO LRFD SPECIFICATIONS.
ALL CLOSURE CONCRETE SHALL BE CLASS "C" WITH A MINIMUM COMPRESSIVE STRENGTH OF 3600 psi AND SHALL BE PLACED ACCORDING TO THE ITEM "CONCRETE STRUCTURES".
ANY ADDITIONAL CONCRETE REQUIRED FOR THE CLOSURES SHALL BE CONSIDERED SUBSIDIARY TO THE CONCRETE BOX CULVERT.
REFER TO THE "SINGLE BOX CULVERTS PRECAST STANDARD" AND "BOX CULVERT PRECAST MISCELLANEOUS DETAILS STANDARD" FOR DETAILS AND NOTES NOT SHOWN.

PRECAST PANEL GENERAL NOTES:
1. ALL CONCRETE FOR PANELS IS TO BE CLASS H. RELEASE STRENGTH f'ci=4000 psi. MINIMUM 28 DAYS STRENGTH f'c=5000 psi.
2. SEE 'TYPICAL NON-SKEWED PANEL PLAN' DETAILS AND NOTES ON STANDARD PCP-FAB FOR PANEL REINFORCING DETAILS AND ADDITIONAL NOTES.
3. FOR WING WALL AND END DETAIL, SEE TXDOT STANDARD DETAIL SHEET "SF-0."
4. NO GAIN PER JOINT ALLOWED FOR DECK PANEL.
5. ½" GAIN PER PRECAST BOX IS ALLOWED.

STATE OF TEXAS
OSAMA A. SHAHAWY
88476
LICENSED
PROFESSIONAL ENGINEER
4/11/11

REV. No.	DATE	REVISION	BY
△			
△			
△			

PBSJ an Atkins company TBPE REG. # F-474

Texas Department of Transportation
Austin District
©2011 by TxDOT

SH 45 / O'CONNOR DRIVE
BRIDGE CLASS CULVERT

CULVERT 2
DETAILS

SCALE: NTS SHEET 2 OF 4

DESIGNED: MM	FED. RD DIV. No.	STATE	PROJECT No.			HIGHWAY No.
CHECKED: GG	6	TEXAS				LP 1/SH 45
DRAWN: KK	STATE DISTRICT	COUNTY	CONTROL No.	SECTION No.	JOB No.	SHEET No.
CHECKED: GG	AUSTIN	WILLIAMSON	0683	06	027	488

PLOT DRIVER: RD*11x17*PDF.plt
PEN TABLE: plotordr*ocon.tbl
FILE: r:\trans-design\o'connor\cadd\bdg\cul\OC45CLde+02.dgn
DATE: 4/11/2011 TIME: 10:39:27 AM

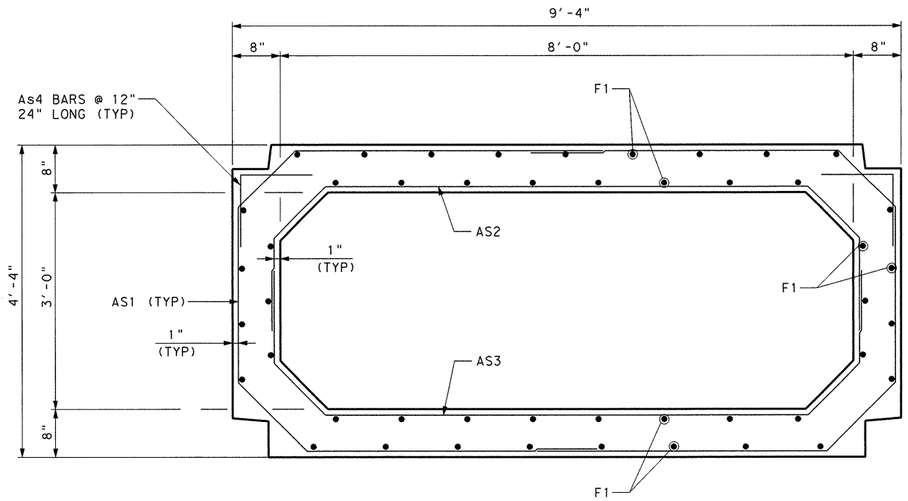

BAR	SIZE	SPCG	LENGTH
As1	#5	6"	13'-3"
As2	#5	9"	11'-8"
As3	#5	9"	11'-8"
As4	#4	12"	2'-0"
K	#5	9"	11'-8"
F1	#4	12"	9'-1"

8'x3' PRECAST CULVERT SECTION

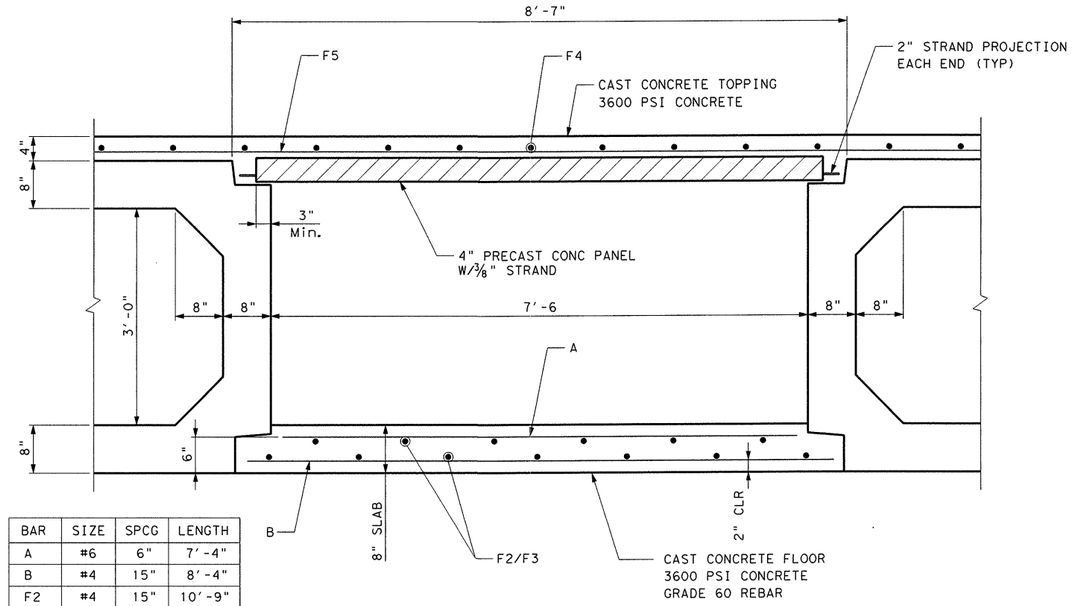

BAR	SIZE	SPCG	LENGTH
A	#6	6"	7'-4"
B	#4	15"	8'-4"
F2	#4	15"	10'-9"
F3	#4	15"	7'-2"
F4	#4	12"	19'-0"
F5	#4	12"	76'-4"

7.5'x 3.333' CULVERT SECTION

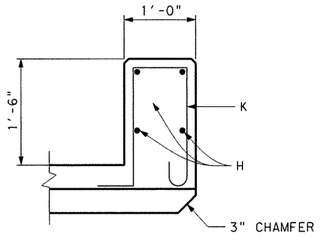

SECTION THRU CURB

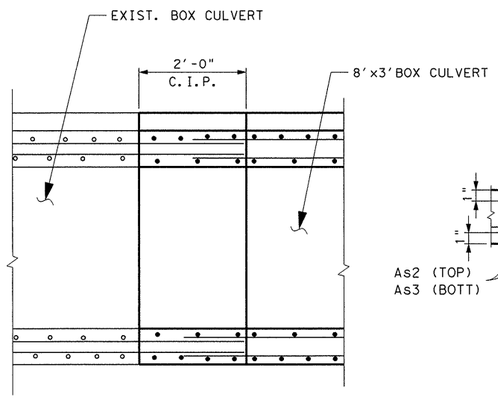

DETAIL 1

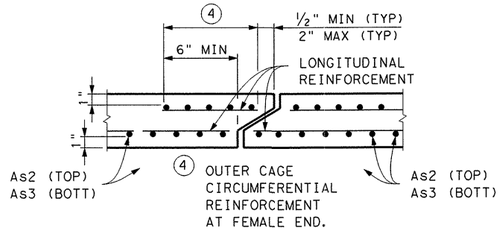

(TOP AND BOTTOM SLAB
JOINT REINFORCEMENT)

DETAIL 2

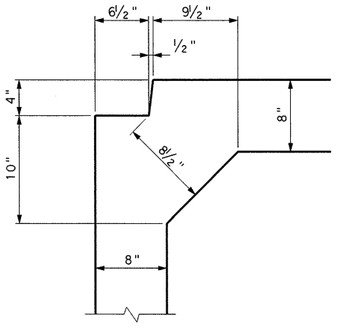

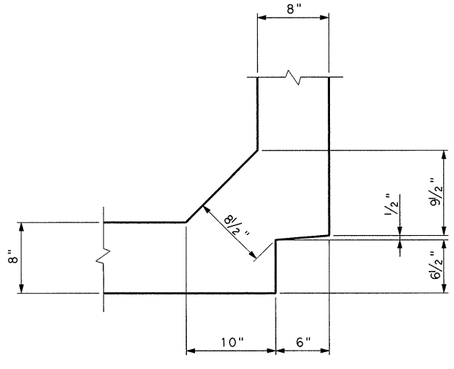

TOP SLAB CORNER

NOTE:

1. REMOVE THE CONCRETE IN TOP SLAB UNTIL THE K BARS ARE COMPLETELY REMOVED.
2. ALL REINFORCING IN THE CLOSURE POUR SHALL BE THE SAME SIZE AND SPACING AS IN THE PRECAST BOX SECTION.
3. PRECAST BOX REINFORCING SHALL EXTEND A MINIMUM OF 1'-0" INTO CONCRETE CLOSURE (TYP).
4. ALL CURB CONCRETE AND REINFORCING IS CONSIDERED PART OF THE BOX CULVERT FOR PAYMENT.
5. ANY ADDITIONAL CONCRETE AND REINFORCING REQUIRED FOR THE CLOSURES SHALL BE CONSIDERED AS SUBSIDIARY TO THE CONCRETE BOX CULVERT.

REV. No.	DATE	REVISION	BY
△			
△			
△			

PBSJ
an Atkins company TBPE REG. # F-474

Texas Department of Transportation
Austin District
©2011 by TxDOT

SH 45 / O'CONNOR DRIVE
BRIDGE CLASS CULVERT

CULVERT 2
DETAILS

SCALE: NTS SHEET 3 OF 4

DESIGNED: MM	FED. RD DIV. No.	STATE	PROJECT No.			HIGHWAY No.	
CHECKED: GG	6	TEXAS				LP 1/SH 45	
DRAWN: JF	STATE DISTRICT	COUNTY		CONTROL No.	SECTION No.	JOB No.	SHEET No.
CHECKED: GG	AUSTIN	WILLIAMSON		0683	06	027	489

PLOT DRIVER: RD*11x17*PDF.plt
PEN TABLE: plotordr*ocon.tbl
FILE: r:\trans-design\o'connor\cadd\bdg\cul\OC45CLdet03.dgn
DATE: 4/11/2011 TIME: 10:39:28 AM

DATE: 4/11/2011 TIME: 10:39:29 AM

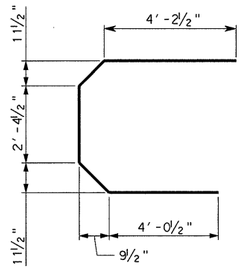

BAR As1

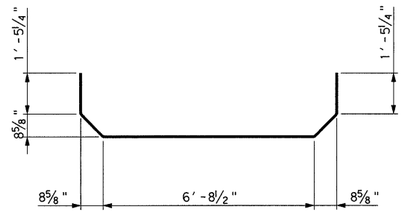

BAR As2 & As3

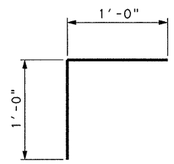

BAR As4

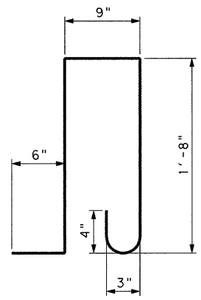

BAR K ~ #4

(SPA=12" MAX)
(LENGTH=5′-1")

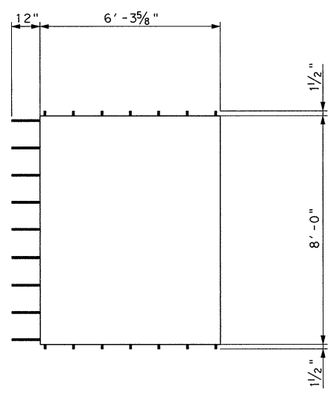

PANEL P1

(TOTAL 4)

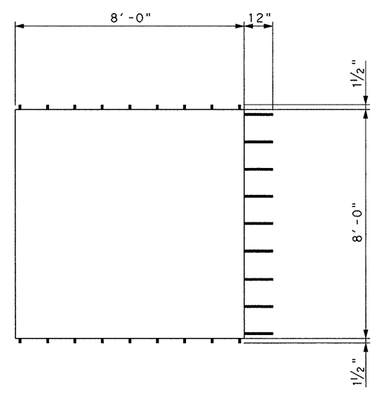

PANEL P2

(TOTAL 4)

* FOR REINFORCEMENT AND PANEL PREFABRICATION DETAILS, SEE PCP-FAB.

TABLE OF ETIMATED QUANTITIES
C.I.P SLAB

BAR	REINF CONCRETE SLAB	CONCRET CLASS "C"	TOTAL REINF STEEL
	SF	CY	LB
TOP	1495	18.5	5,980
BOTTOM	612	15.1	3,980
TOTAL	2107	33.6	9,960

TABLE OF ETIMATED QUANTITIES

BAR	NO.	SIZE	LENGTH	WEIGHT
As1	390	#5	13′-8"	5,559
As2	145	#5	11′-8"	1,764
As3	145	#5	11′-8"	1,764
As4	400	#5	2′-0"	834
F1	470	#4	9′-1"	2,851
F2	52	#4	10"-9"	373
F3	52	#4	7′-2"	249
A	156	#6	7′-4"	1,718
B	68	#4	8′-4"	379
F4	78	#4	19′-0"	990
F5	20	#4	76′-4"	1,020
K	78	#4	5′-1"	265
H	4	#4	76′-4"	204
REINFORCING STEEL *			LB	17,970
CLASS "C" CONC BOX CULV.			CY	56.7

* FOR CONTRACTOR'S INFORMATION ONLY

STATE OF TEXAS
OSAMA A. SHAHAWY
88476
LICENSED
PROFESSIONAL ENGINEER
4/11/11

REV. No.	DATE	REVISION	BY
△			
△			
△			

PBSJ
an Atkins company TBPE REG. # F-474

Texas Department of Transportation
Austin District
©2011 by TxDOT

SH 45 / O'CONNOR DRIVE BRIDGE CLASS CULVERT

CULVERT 2 DETAILS

SCALE: NTS SHEET 4 OF 4

DESIGNED: SS	FED. RD DIV. No.	STATE	PROJECT No.		HIGHWAY No.	
CHECKED: OAS	6	TEXAS			LP 1/SH 45	
DRAWN: JF	STATE DISTRICT	COUNTY	CONTROL No.	SECTION No.	JOB No.	SHEET No.
CHECKED: OAS	AUSTIN	WILLIAMSON	0683	06	027	490

PLOT DRIVER: RD*11x17*PDF.plt
PEN TABLE: plotord*ocon.tbl
FILE: r:\trans-design\o'connor\cadd\bdg\cul\0C45CLdet04.dgn

GENERAL NOTES:

1. FOR DRILLED SHAFT ADDITIONAL DETAILS, SEE TXDOT "FD" STANDARD SHEET. FOR STATION AND LOCATIONS, SEE TRAFFIC SIGNAL LAYOUTS.
2. SEE "TRAFFIC RAIL FOUNDATIONS AND MISCELLANEOUS DETAILS" STANDARDS FOR MORE DETAILS.
3. CONDUIT SHALL HAVE MINIMUM COVER, REFER TO APPLICABLE RAIL STANDARDS FOR MORE DETAILS.
4. TRAFFIC SIGNAL POLE COLUMN SHALL BE CONSTRUCTED PRIOR TO INSTALLING WALL PANELS.

LOCATION	TRAFFIC SIGNAL POLE	STATION	OFFSET	COL. LENGTH (FT)	D.S. LENGTH (FT)
RET WALL #2	P2	410+36.50	13.50' LT	36'	23'
RET WALL #4	P3	410+52.44	63.82' RT	34'	21'
RET WALL #6	P4	409+98.60	6.00' RT	25'	22'
RET WALL #6	P5	411+09.60	6.00' RT	29'	22'

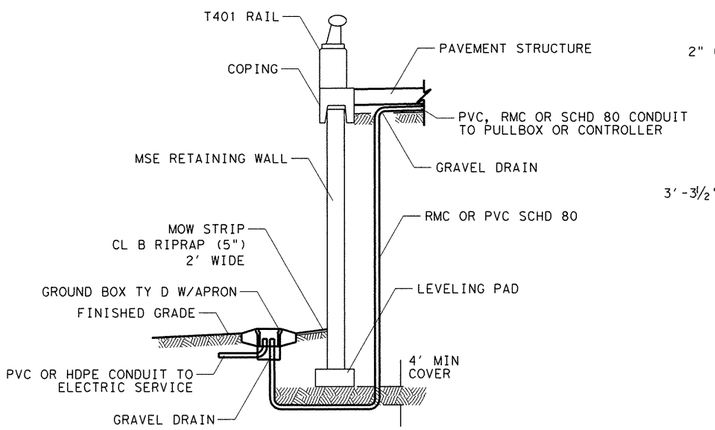

CONDUIT PLACEMENT UNDER WALL

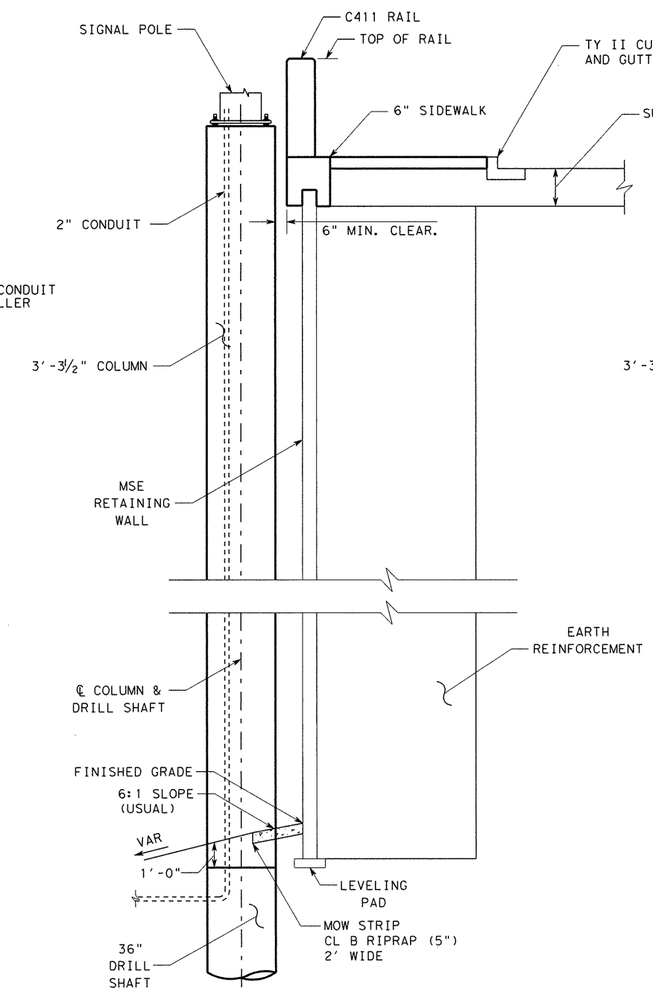

RETAINING WALL #2, #4

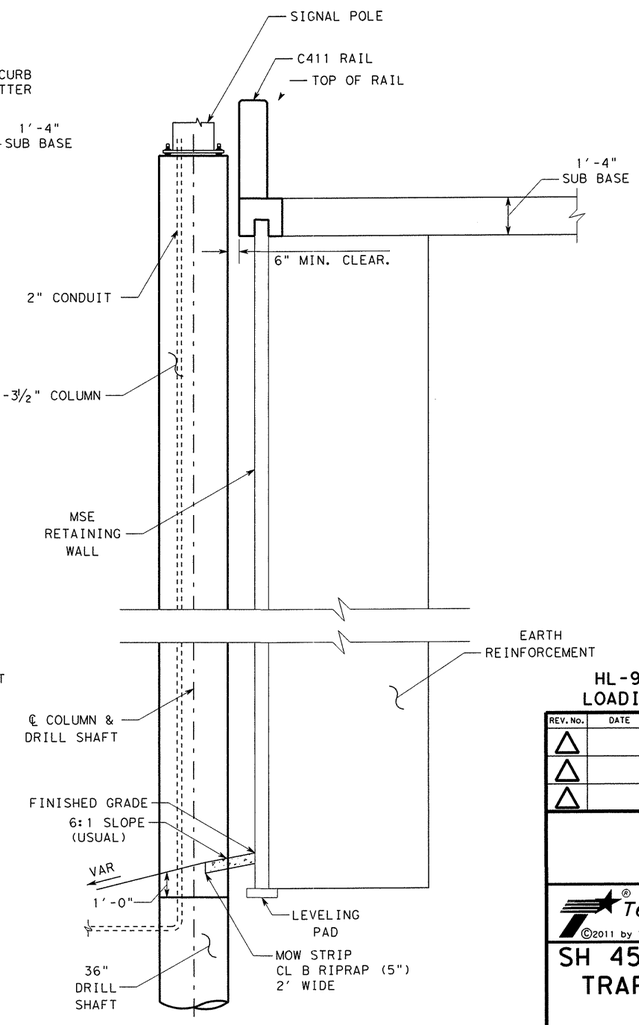

RETAINING WALL #6

HL-93 LOADING

STATE OF TEXAS
OSAMA A. SHAHAWY
88476
LICENSED PROFESSIONAL ENGINEER
4/11/11

REV. No.	DATE	REVISION	BY
△			
△			
△			

PBSJ an Atkins company TBPE REG. # F-474

Texas Department of Transportation
Austin District
©2011 by TxDOT

SH 45 / O'CONNOR DRIVE TRAFFIC SIGNAL POLE FOUNDATION DETAILS

SCALE: NTS — SHEET 1 OF 2

DESIGNED: RBR	FED. RD DIV. No.	STATE	PROJECT No.			HIGHWAY No.
CHECKED: OAS	6	TEXAS				LP 1/SH 45
DRAWN: RBR	STATE DISTRICT	COUNTY	CONTROL No.	SECTION No.	JOB No.	SHEET No.
CHECKED: OAS	AUSTIN	WILLIAMSON	0683	06	027	491

DATE: 4/11/2011 TIME: 10:39:30 AM
PLOT DRIVER: RD*11x17*PDF.plt
PEN TABLE: plotordr*ocon.tbl
FILE: r:\trans-design\o'connor\CADD\BDG\AESTH\OC45TPocon01.dgn

DATE: 4/11/2011 TIME: 10:39:32 AM

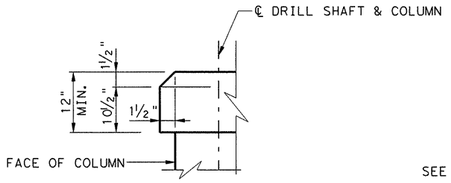

DETAIL 1

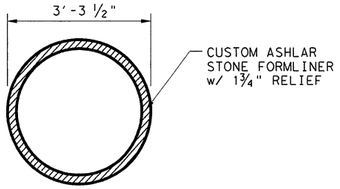

POLE COLUMN DETAIL
SECTION A-A

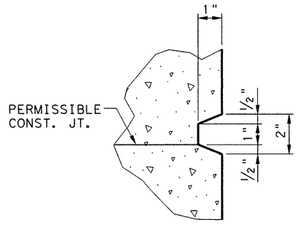

2" REVEAL DETAIL

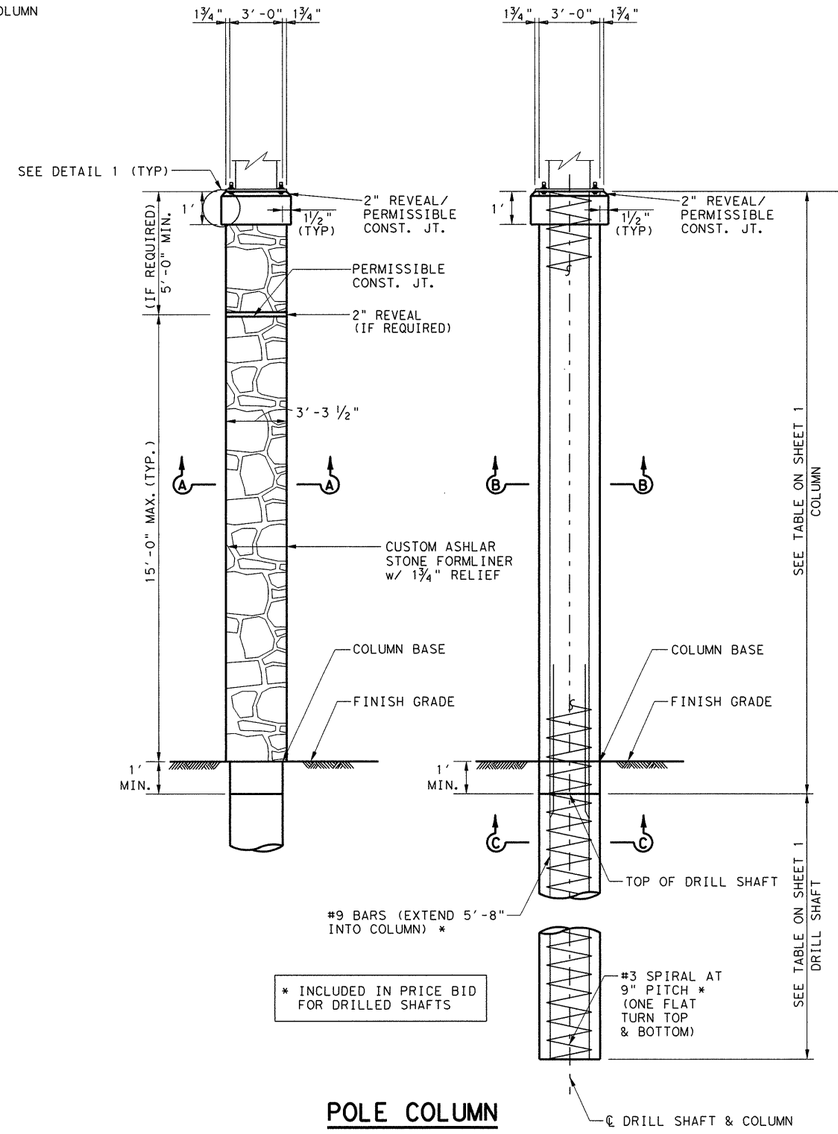

* INCLUDED IN PRICE BID FOR DRILLED SHAFTS

POLE COLUMN
END ELEVATION

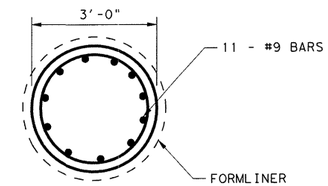

POLE COLUMN DETAIL
SECTION B-B
SECTION SHOWN WITHOUT FORMLINER

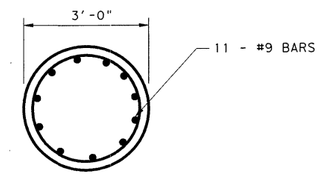

POLE DRILL SHAFT DETAIL
SECTION C-C

GENERAL NOTES:

1. MIN. DISTANCE BETWEEN CANTILEVER SIGN SUPPORT AND CUSTOM RETAINING WALL COPING IS 1'-6"
2. DELETE CUSTOM ASHLAR STONE FORMLINER FROM INSIDE FACE BETWEEN TOP OF COLUMN BASE AND TOP OF CUSTOM RETAINING WALL COPING.
3. TRAFFIC SIGNAL POLE COLUMN SHALL BE CONSTRUCTED PRIOR TO INSTALLING WALL PANELS.
4. FOR ANCHOR BOLT DETAIL SEE TxDOT TRAFFIC SIGNAL POLE FOUNDATION "TS-FD-99" STANDARD SHEET.

REV. No.	DATE	REVISION	BY
△			
△			
△			

PBSJ an Atkins company TBPE REG. # F-474

Texas Department of Transportation
Austin District
©2011 by TxDOT

SH 45 / O'CONNOR DRIVE TRAFFIC SIGNAL POLE FOUNDATION DETAILS

SCALE: NTS SHEET 2 OF 2

DESIGNED: SS	FED. RD DIV. No.	STATE	PROJECT No.			HIGHWAY No.
CHECKED: OAS	6	TEXAS				LP 1/SH 45
DRAWN: RBR	STATE DISTRICT	COUNTY	CONTROL No.	SECTION No.	JOB No.	SHEET No.
CHECKED: OAS	AUSTIN	WILLIAMSON	0683	06	027	492

PLOT DRIVER: RD*11x17*PDF.plt
PEN TABLE: plotordr*ocon.tbl
FILE: r:\trans-design\o'connor\CADD\BDG\AESTH\OC45TPocon02.dgn

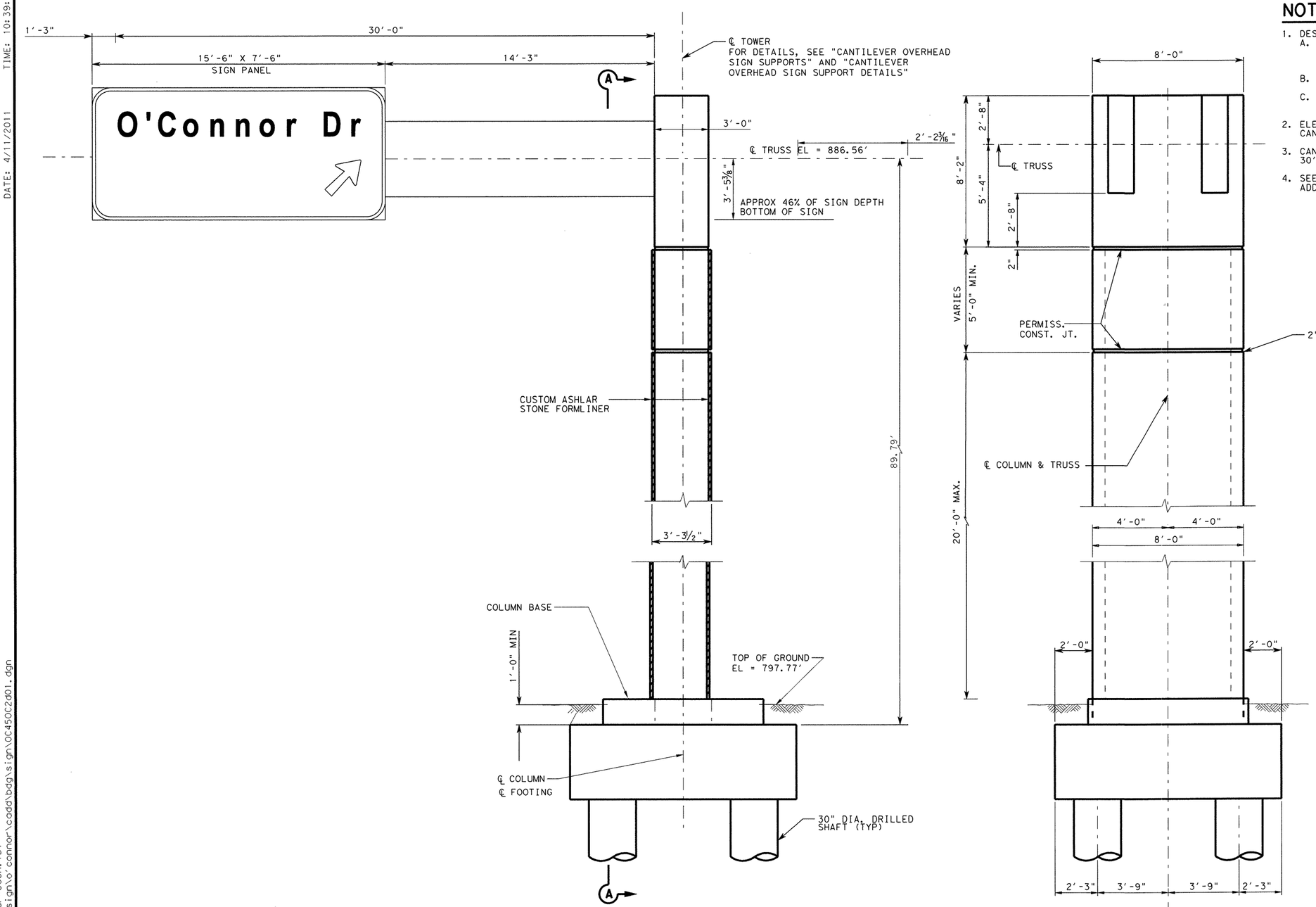

CANTILEVER OVERHEAD SIGN - ELEVATION

DCNW
STA 1323+80.00

SECTION A-A

NOTES:

1. DESIGN SPECIFICATIONS:
   A. STANDARD SPECIFICATIONS FOR STRUCTURAL SUPPORTS FOR HIGHWAY SIGNS, LUMINARS AND TRAFFIC SIGNALS, FOURTH EDITION (2001) WITH 2003 INERIM REVISIONS.
   B. AASHTO LRFD BRIDGE DESIGN SPECIFICAIONS, FIFTH EDITION (2010).
   C. TXDOT STANDARD SPECIFICATIONS & MAINTENANCE OF HIGHWAYS, STREETS & BRIDGES 2004.
2. ELEVATIONS TO BE VERIFIED PRIOR TO FABRICATION OF CANTILEVER SUPPORT OVERHEAD SIGN.
3. CANTILEVER OVERHEAD SIGN SUPPORT DESIGNED ON 30' STRUCTURE LENGTH.
4. SEE AESTHETIC PLANS, SHEET 2 of 5 FOR FORMLINER, R ADDITIONAL DETAILS.

STATE OF TEXAS
OSAMA A. SHAHAWY
88476
LICENSED
PROFESSIONAL ENGINEER
4/11/11

REV. No.	DATE	REVISION	BY
△			
△			
△			

PBSJ
an Atkins company
TBPE REG. # F-474

Texas Department of Transportation
Austin District
©2011 by TxDOT

SH 45 / O'CONNOR DRIVE

CANTILEVER OVERHEAD SIGN SUPPORT "OC-2"

ELEVATION

SCALE: NTS

SHEET 1 OF 5

DESIGNED: SS	FED. RD DIV. No.	STATE	PROJECT No.			HIGHWAY No.
CHECKED: OAS	6	TEXAS				LP 1/SH 45
DRAWN: RBR	STATE DISTRICT	COUNTY	CONTROL No.	SECTION No.	JOB No.	SHEET No.
CHECKED: OAS	AUSTIN	WILLIAMSON	0683	06	027	493

TIME: 10:39:33 AM
DATE: 4/11/2011

PLOT DRIVER: RD*11x17*PDF.plt
PEN TABLE: plotordr*ocon.tbl
FILE: r:\trans-design\o'connor\cadd\bdg\sign\0C450C2d01.dgn

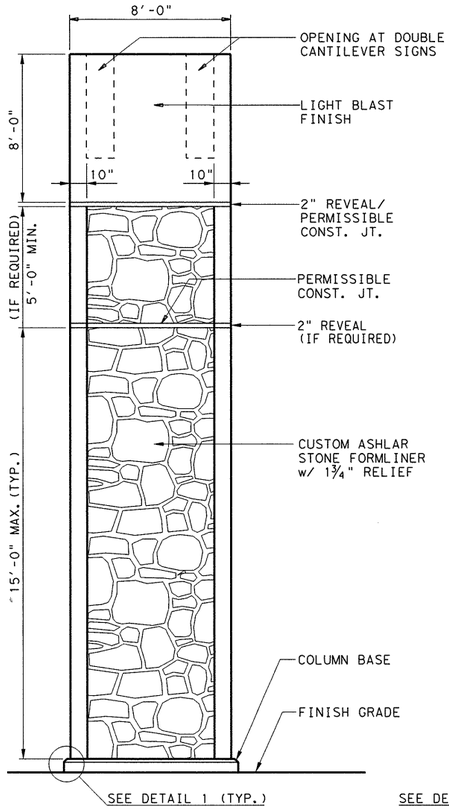

SIGN COLUMN EXTERIOR ELEVATION

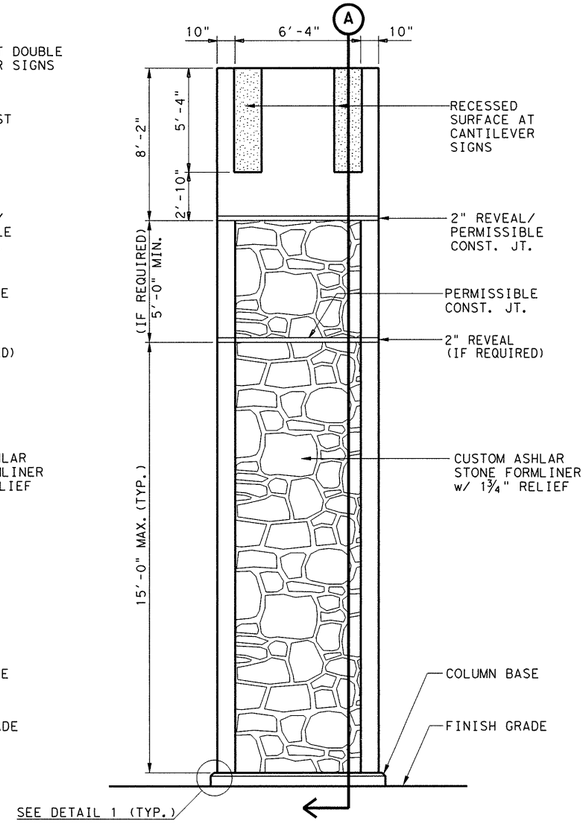

SIGN COLUMN INTERIOR ELEVATION

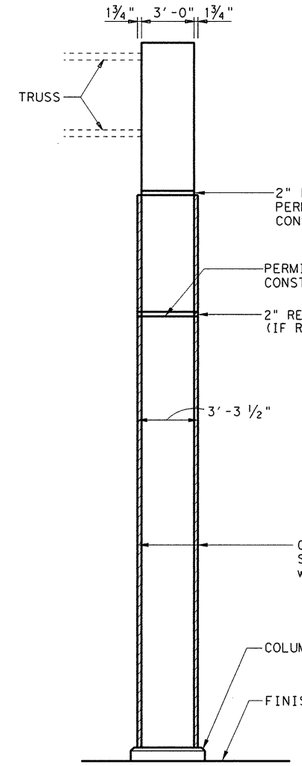

SIGN COLUMN END ELEVATION

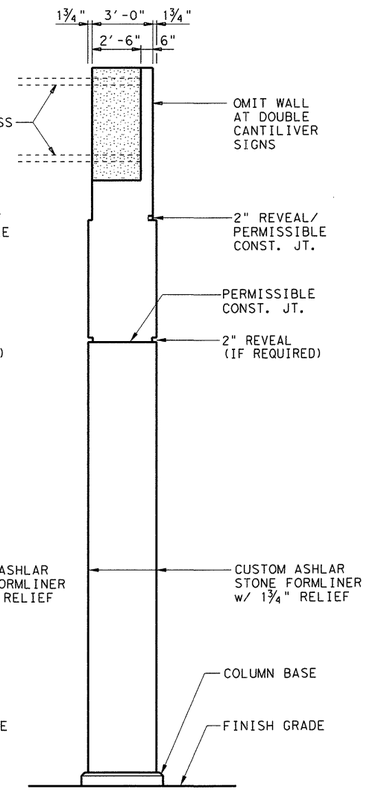

SECTION A

GENERAL NOTES:

1. MIN. DISTANCE BETWEEN CANTILEVER SIGN SUPPORT AND CUSTOM RETAINING WALL COPING IS 1'-6"
2. DELETE CUSTOM ASHLAR STONE FORMLINER FROM INSIDE FACE BETWEEN TOP OF COLUMN BASE AND TOP OF CUSTOM RETAINING WALL COPING.

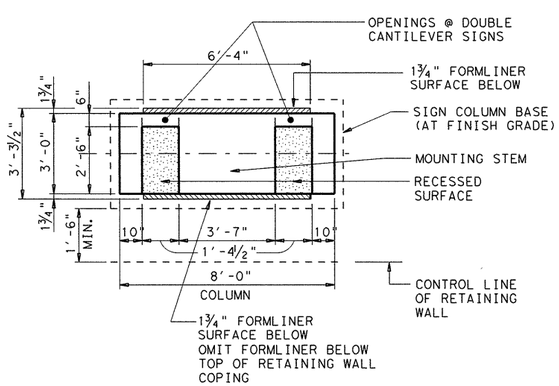

PLAN DETAIL

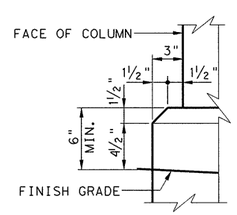

DETAIL 1

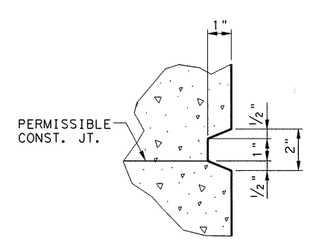

2" REVEAL DETAIL

STATE OF TEXAS
OSAMA A. SHAHAWY
88476
LICENSED
PROFESSIONAL ENGINEER
4/11/11

REV. No.	DATE	REVISION	BY
△			
△			
△			

PBSJ an Atkins company TBPE REG. # F-474

Texas Department of Transportation
Austin District
©2011 by TxDOT

SH 45 / O'CONNOR DRIVE
AESTHETIC DESIGN STANDARD
CANTILEVER OVERHEAD SIGN SUPPORT "OC-2"

SCALE: NTS — SHEET 2 OF 5

DESIGNED: SS	FED. RD DIV. No.	STATE	PROJECT No.			HIGHWAY No.	
CHECKED: OAS	6	TEXAS				LP 1/SH 45	
DRAWN: RBR	STATE DISTRICT	COUNTY	CONTROL No.	SECTION No.	JOB No.	SHEET No.	
CHECKED: OAS	AUSTIN	WILLIAMSON	0683	06	027	494	

DATE: 4/11/2011 TIME: 10:39:34 AM

PLOT DRIVER: RD*11x17*PDF.plt
PEN TABLE: plotordr*ocon.tbl
FILE: r:\trans-design\o'connor\cadd\bdg\sign\OC450C2d02.dgn

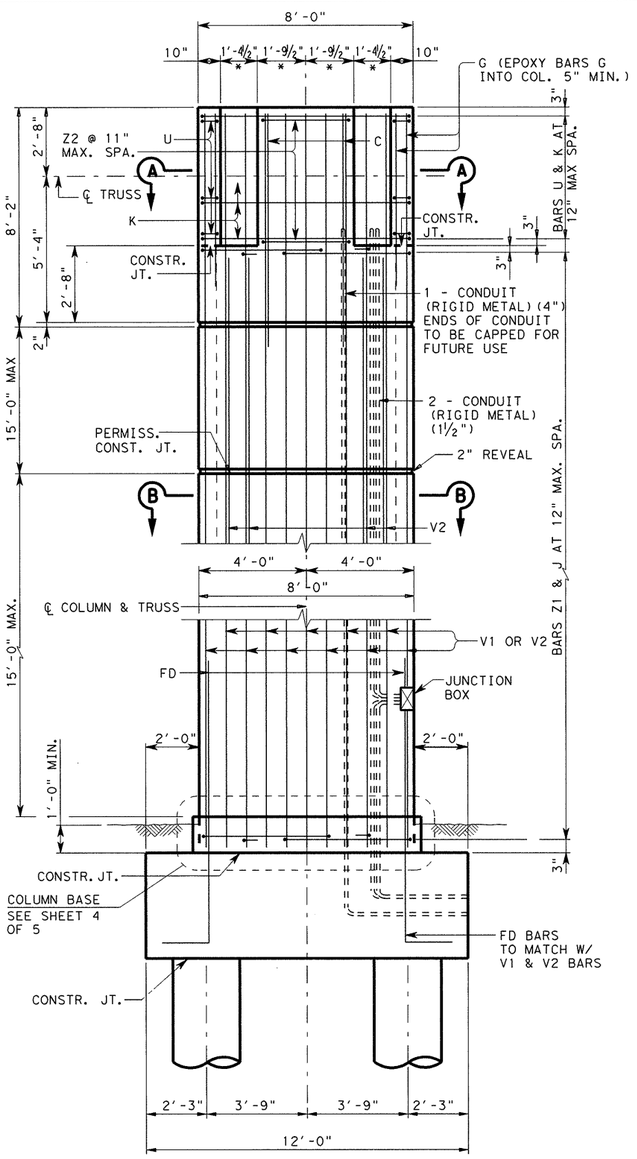

FRONT ELEVATION

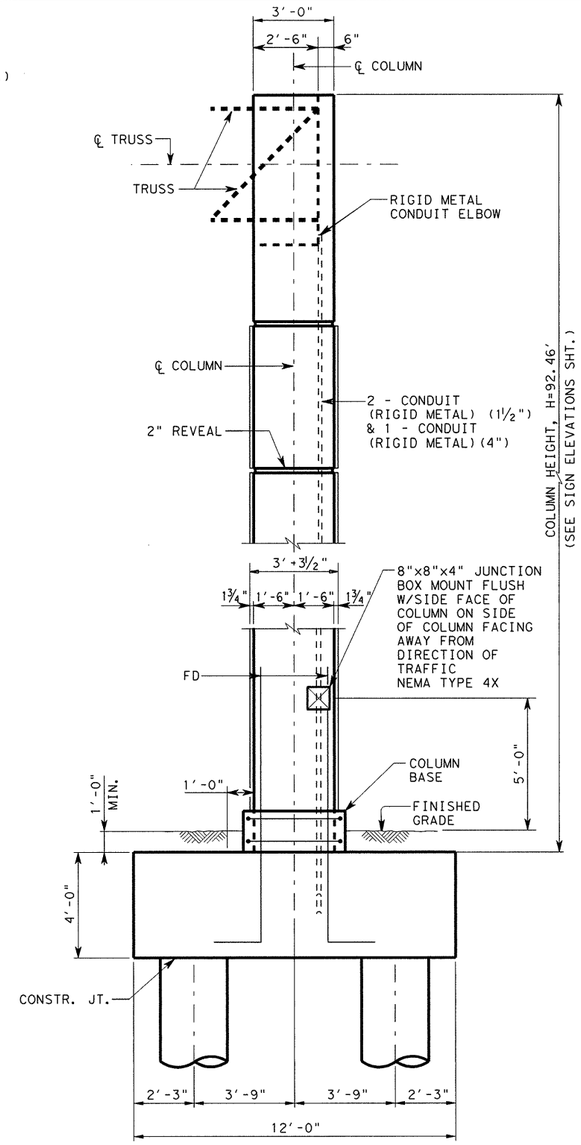

SIDE ELEVATION

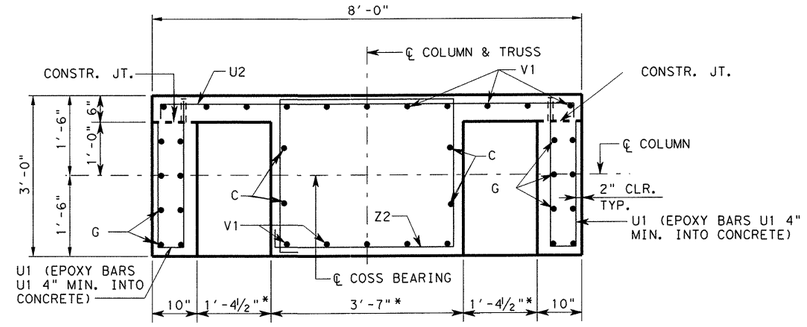

SECTION A-A AT CANTILEVER

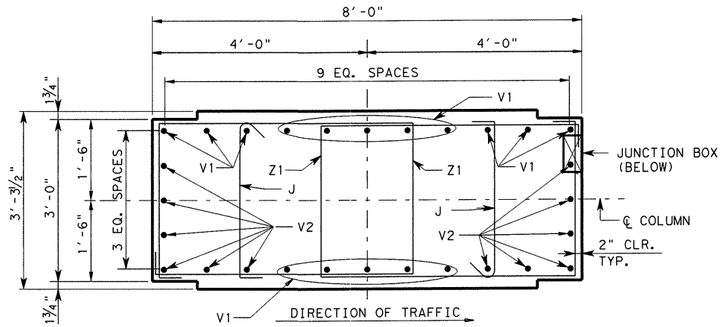

SECTION B-B

COSS COLUMN DETAILS

(FOOTING REINFORCING OMITTED FOR CLARITY)

* NOTE: DIMENSIONS SHOWN ARE FOR A 4'-0" BY 4'-0" CANTILEVER SIGN TRUSS. DIMENSIONS OF MOUNTING STEM , NO. & LOCATION OF BARS C & V1 AND DIMENSIONS OF BARS Z2 SHALL BE ADJUSTED FOR OTHER TRUSS SIZES.

STATE OF TEXAS
OSAMA A. SHAHAWY
88476
LICENSED PROFESSIONAL ENGINEER
4/11/11

REV. No.	DATE	REVISION	BY
△			
△			
△			

PBSJ an Atkins company TBPE REG. # F-474

Texas Department of Transportation Austin District

©2011 by TxDOT

SH 45 / O'CONNOR DRIVE

CANTILEVER OVERHEAD SIGN SUPPORT "OC-2"

COLUMN DETAILS

SCALE: NTS SHEET 3 OF 5

DESIGNED: SS	FED. RD DIV. No.	STATE	PROJECT No.			HIGHWAY No.	
CHECKED: OAS	6	TEXAS				LP 1/SH 45	
DRAWN: RBR	STATE DISTRICT	COUNTY		CONTROL No.	SECTION No.	JOB No.	SHEET No.
CHECKED: OAS	AUSTIN	WILLIAMSON		0683	06	027	495

DATE: 4/11/2011 TIME: 10:39:35 AM
PLOT DRIVER: RD*11x17*PDF.plt
PEN TABLE: plotordr*ocon.tbl
FILE: r:\trans-design\o'connor\cadd\bdg\sign\OC450C2d03.dgn

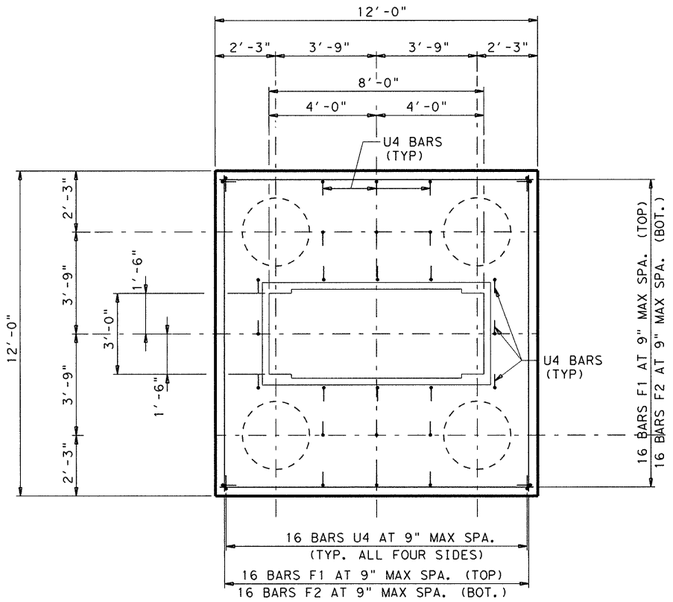

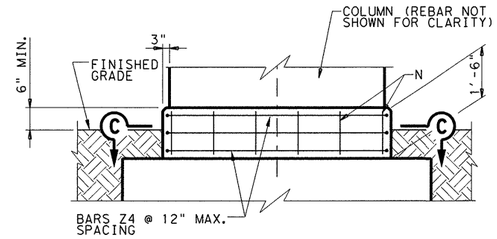

COLUMN BASE ELEVATION

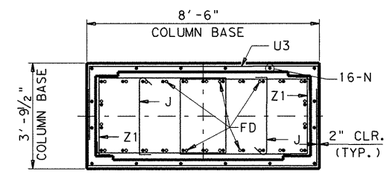

SECTION C-C

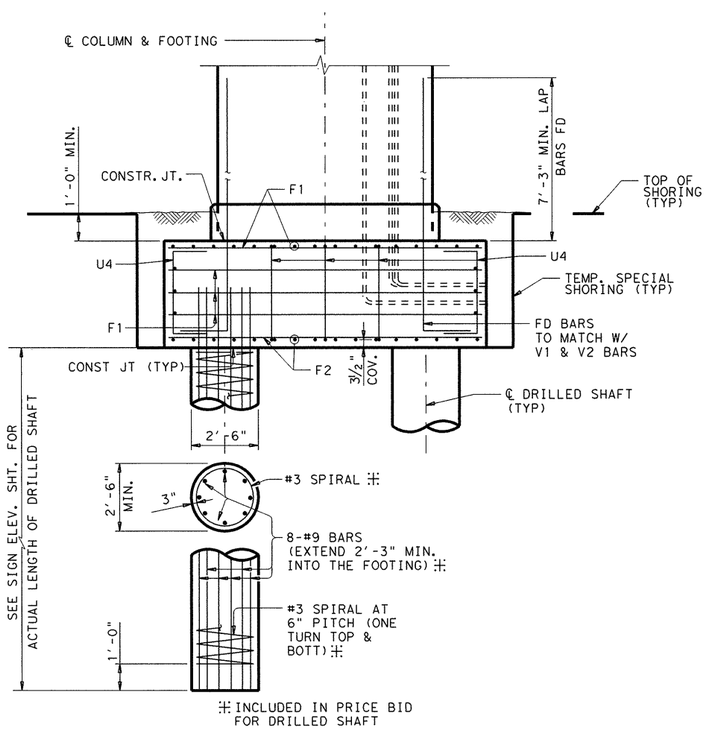

FRONT ELEVATION

STATE OF TEXAS
OSAMA A. SHAHAWY
88476
LICENSED
PROFESSIONAL ENGINEER
4/11/11

REV. No.	DATE	REVISION	BY
△			
△			
△			

PBSJ
an Atkins company TBPE REG. # F-474

Texas Department of Transportation
Austin District
©2011 by TxDOT

SH 45 / O'CONNOR DRIVE

CANTILEVER OVERHEAD SIGN SUPPORT "OC-2"

COLUMN DETAILS

SCALE: NTS — SHEET 4 OF 5

DESIGNED: SS	FED. RD DIV. No.	STATE	PROJECT No.			HIGHWAY No.	
CHECKED: OAS	6	TEXAS				LP 1/SH 45	
DRAWN: RBR	STATE DISTRICT	COUNTY	CONTROL No.	SECTION No.	JOB No.	SHEET No.	
CHECKED: OAS	AUSTIN	WILLIAMSON	0683	06	027	496	

DATE: 4/11/2011 TIME: 10:39:37 AM
PLOT DRIVER: RD*11x17*PDF.plt
PEN TABLE: plotdrv*ocon.tbl
FILE: r:\trans-design\o'connor\cadd\bdg\sign\OC450C2d04.dgn

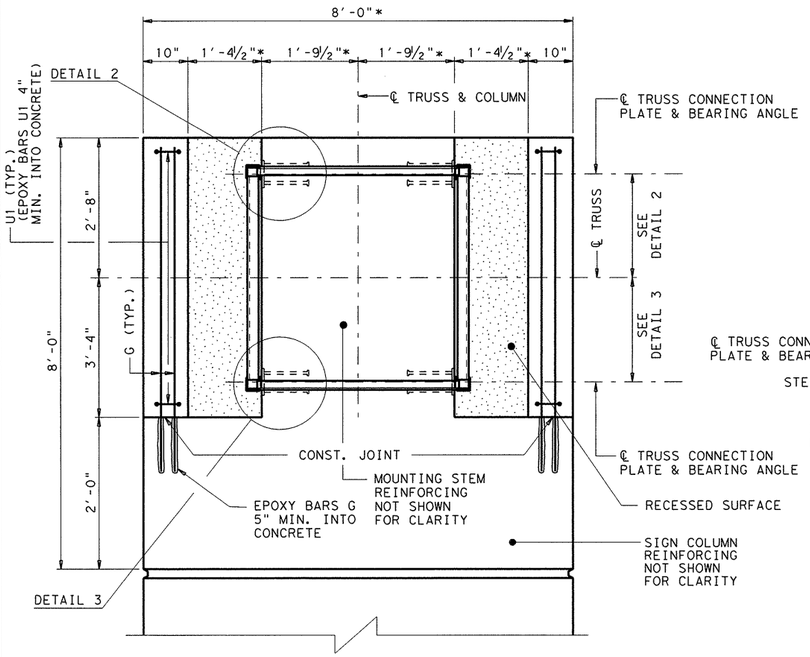

* DIMENSIONS SHOWN ARE FOR A 4'-0" BY 4'-0" CANTILEVER SIGN TRUSS. DIMENSIONS OF MOUNTING STEM , NO. & LOCATION OF BARS C & V1 AND DIMENSIONS OF BARS Z2 SHALL BE ADJUSTED FOR OTHER TRUSS SIZES.

COLUMN ELEVATION AT TRUSS CONNECTION

NOTES:

1. SEE NOTE 11 ON SHEET 1 OF 13
2. 10" CHEEKWALLS SHALL BE CONSTRUCTED AFTER TRUSS IS ERECTED.

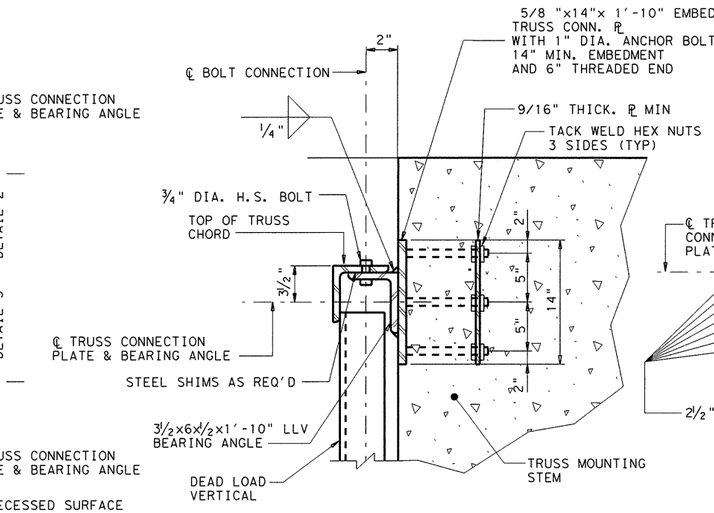

DETAIL 2
(TOP CONDITION)

NOTE:

ALL ANCHOR BOLTS SHALL BE ASTM F 1554 GRADE 55 WITH PLAIN A563 HEX NUT, OR EQUIVALENT.

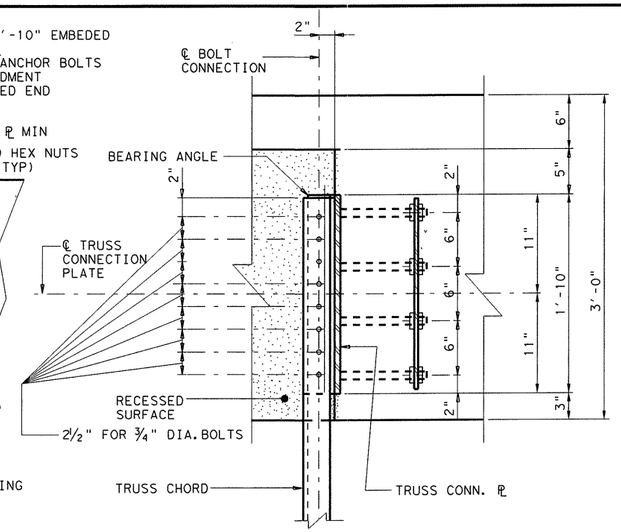

TRUSS CONNECTION PLAN

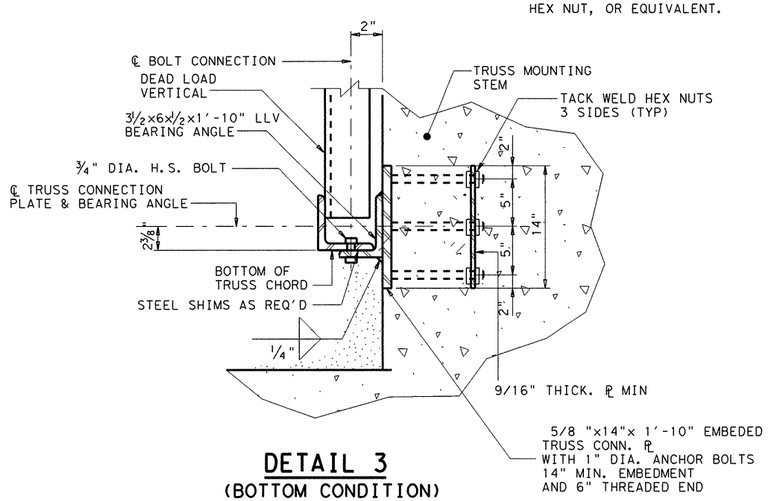

DETAIL 3
(BOTTOM CONDITION)

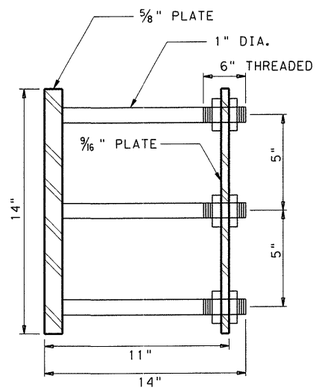

TRUSS CONNECTION PLATE

TABLE OF ESTIMATED QUANTITIES				
COLUMN AND FOOTING				
BAR	NO.	SIZE	LENGTH	WEIGHT
C	4	# 8	8'- 8"	93
G	16	# 5	6'- 5"	107
J	170	# 4	3'- 9"	421
F_1	44	# 6	11'- 8"	771
F_2	32	# 8	11'- 8"	997
FD	28	#10	12'- 6"	1,506
N	16	# 6	1'- 2"	28
U_1	14	# 4	5'- 9"	51
U_2	7	# 4	8'- 3"	39
U_3	6	# 4	13'- 11"	56
U_4	8	# 6	6'- 1"	73
V_1	16	#10	114'- 1"	7,852
V_2	12	#10	105'- 11"	5,467
Z_1	170	# 4	15'- 3"	1,732
Z_2	7	# 6	13'- 8"	143
REINFORCING STEEL *			LB	19,335
CLASS "C" CONCRETE			CY	113.1
TEMP. SPECIAL SHORING**			SF	280

◪ COLUMN QUANTITIES ARE BASED ON A 4'-0" x 4'-0" CANTELEVER SIGN TRUSS. QUANTITIES SHOWN INCLUDE COLUMN, COLUMN BASE, AND FOOTING.

ADJUST REINFORCING STEEL TOTAL BY 173 LBS. AND CONCRETE BY 1.0 C.Y. FOR EACH FOOT VARIATION IN COLUMN.

* FOR CONTRACTOR INFORMATION ONLY.

GENERAL NOTES:
1. CONCRETE STRENGTH F'c=3600 psi
2. ALL REINFORCING SHALL BE GRADE 60.
3. SEE STANDARD FD FOR DRILLED SHAFT FOUNDATION DETAILS AND NOTES.

STATE OF TEXAS
OSAMA A. SHAHAWY
88476
LICENSED PROFESSIONAL ENGINEER
4/11/11

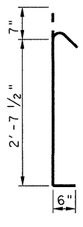

BARS J

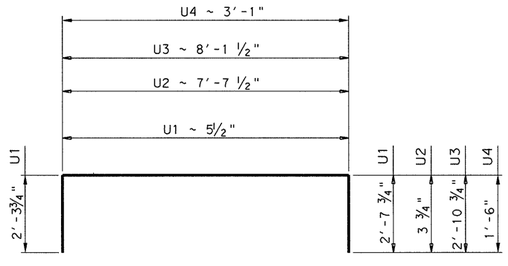

BARS U1, U2, U3 & U4

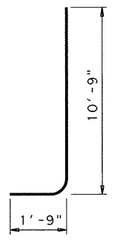

BARS FD

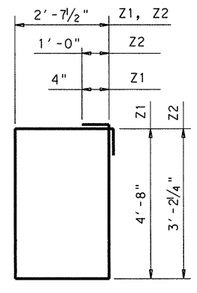

BARS Z1 & Z2

REV. No.	DATE	REVISION	BY
△			
△			
△			

PBSJ an Atkins company TBPE REG. # F-474

Texas Department of Transportation
Austin District
©2011 by TxDOT

SH 45 / O'CONNOR DRIVE
CANTILEVER OVERHEAD SIGN SUPPORT "OC-2" TRUSS MOUNTING DETAIL

SCALE: NTS — SHEET 5 OF 5

DESIGNED: SS	FED. RD DIV. No.	STATE	PROJECT No.			HIGHWAY No.
CHECKED: OAS	6	TEXAS				LP 1/SH 45
DRAWN: RBR	STATE DISTRICT	COUNTY	CONTROL No.	SECTION No.	JOB No.	SHEET No.
CHECKED: OAS	AUSTIN	WILLIAMSON	0683	06	027	497

DATE: 4/11/2011 TIME: 10:39:38 AM
PLOT DRIVER: RD*11x17*PDF.plt
PEN TABLE: plotordr*ocon.tbl
FILE: r:\trans-design\o'connor\oadd\bdg\sign\SH45OC2d05.dgn

NOTES:

1. DESIGNED ACCORDING TO AASHTO LRFD BRIDGE DESIGN SPECIFICATIONS, 4TH EDITION, 2007 AND CURRENT INTERIM SPECIFICATIONS.
2. CONCRETE STRENGTH F'C = 3600 PSI.
3. ALL REINFORCING SHALL BE GRADE 60

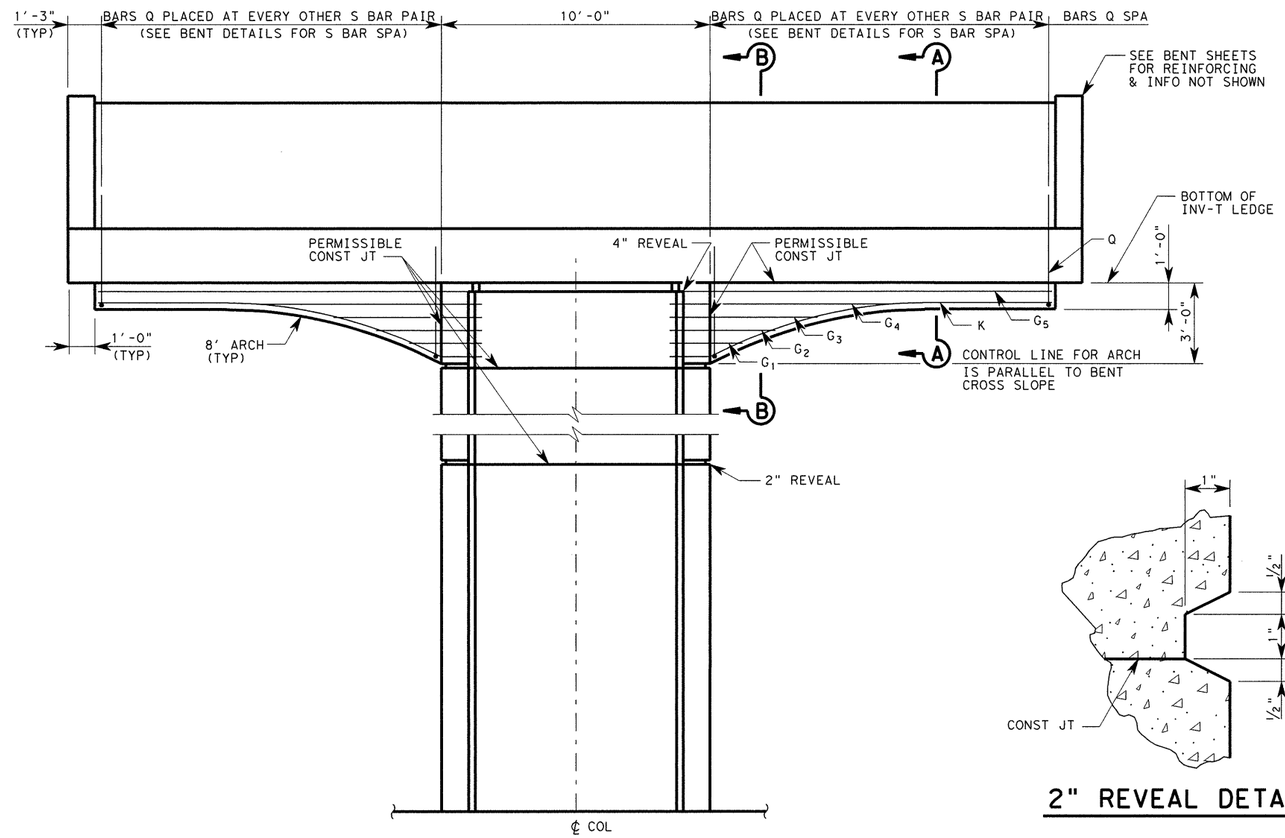

ELEVATION
(SINGLE COLUMN BENT)

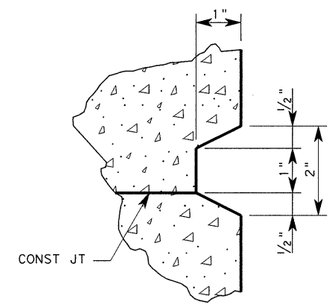

2" REVEAL DETAIL

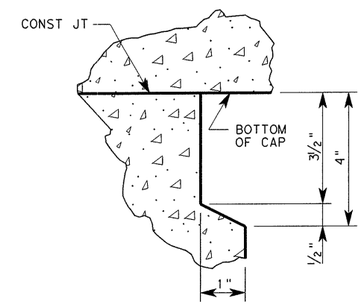

4" REVEAL DETAIL

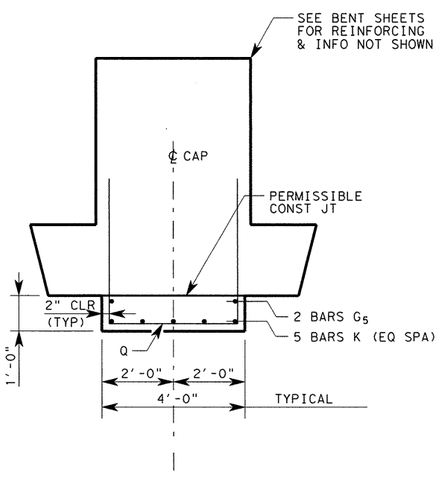

SECTION A-A

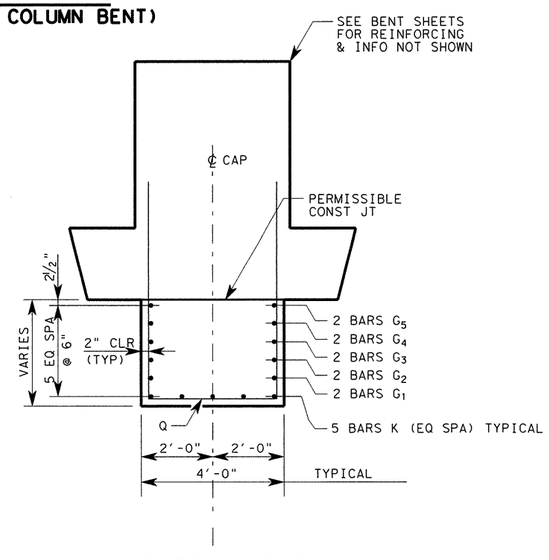

SECTION B-B

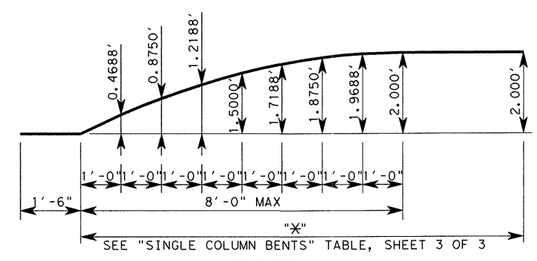

BARS K

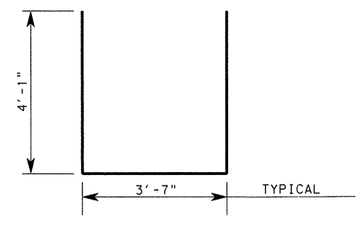

BARS Q

STATE OF TEXAS
OSAMA A. SHAHAWY
88476
LICENSED
PROFESSIONAL ENGINEER
4/11/11

REV. No.	DATE	REVISION	BY
△			
△			
△			

PBSJ an Atkins company TBPE REG. # F-474

Texas Department of Transportation
Austin District
©2011 by TxDOT

SH 45 / O'CONNOR DRIVE AESTHETIC TREATMENT REINFORCEMENT DETAILS

SCALE: NTS — SHEET 1 OF 3

DESIGNED: RBR	FED. RD DIV. No.	STATE	PROJECT No.			HIGHWAY No.
CHECKED: OAS	6	TEXAS				LP 1/SH 45
DRAWN: RBR	STATE DISTRICT	COUNTY	CONTROL No.	SECTION No.	JOB No.	SHEET No.
CHECKED: OAS	AUSTIN	WILLIAMSON	0683	06	027	498

PLOT DRIVER: RD*11x17*PDF.plt
PEN TABLE: plotordr*ocon.tbl
FILE: r:\trans-design\o'connor\cadd\bdg\aesth\OC45AEreinf01.dgn
DATE: 4/11/2011 TIME: 10:39:40 AM

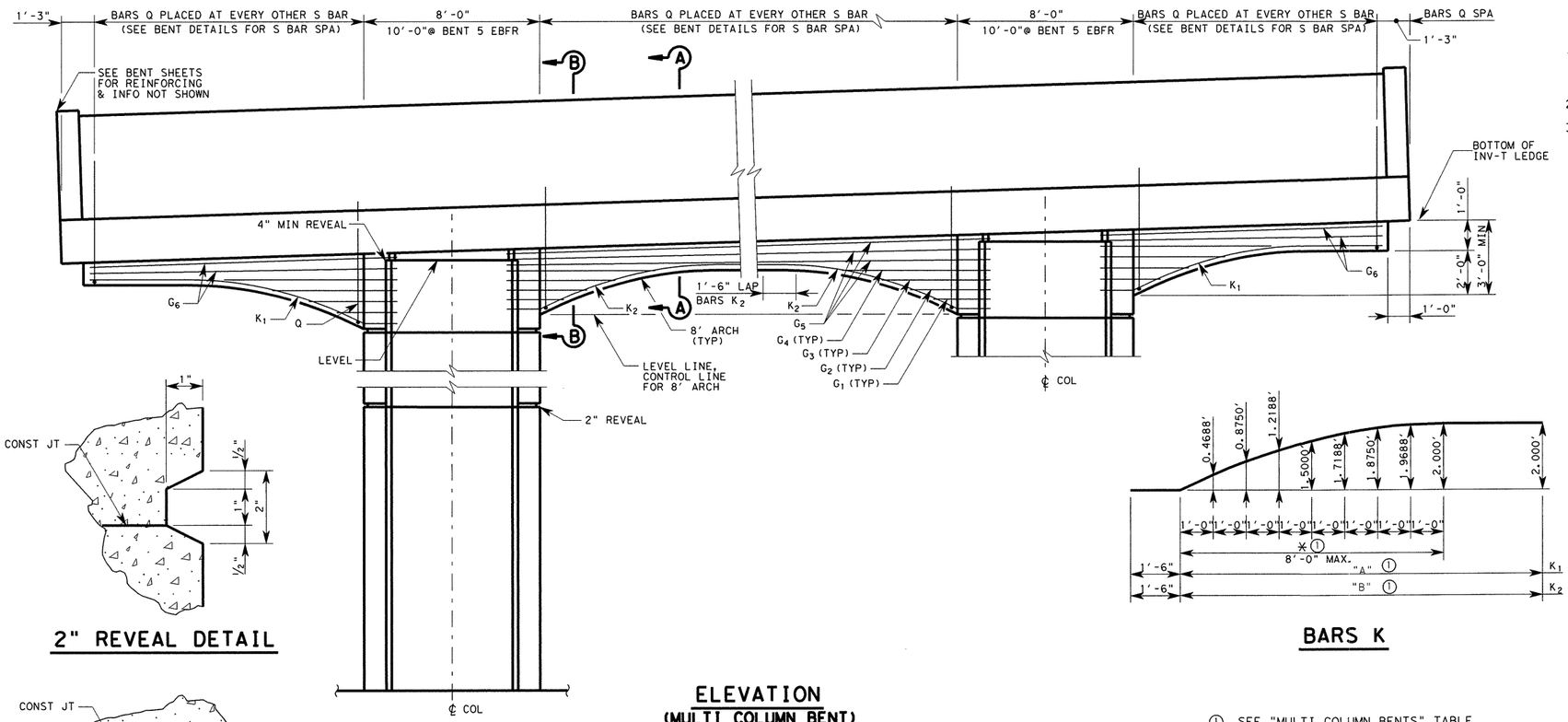

ELEVATION
(MULTI COLUMN BENT)

2" REVEAL DETAIL

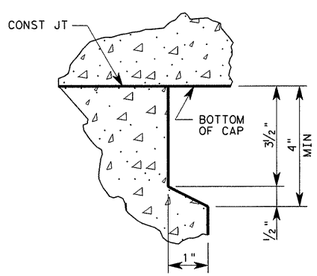

4" REVEAL DETAIL

BARS K

① SEE "MULTI COLUMN BENTS" TABLE, SHEET 3 OF 3 FOR ARCH AND BARS K LENGTH.

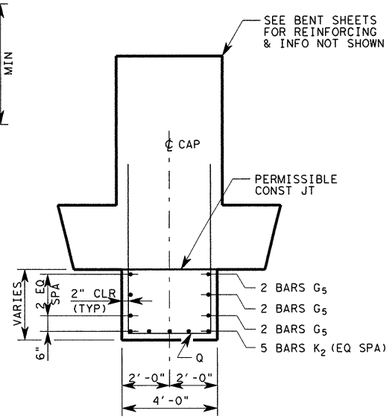

SECTION A-A

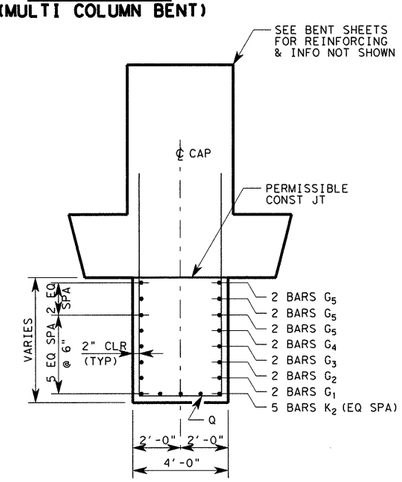

SECTION B-B

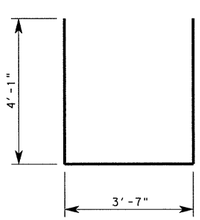

BARS Q

NOTES:

1. DESIGNED ACCORDING TO AASHTO LRFD BRIDGE DESIGN SPECIFICATIONS, 4TH EDITION, 2007 AND CURRENT INTERIM SPECIFICATIONS.
2. CONCRETE STRENGTH F'C = 3600 PSI.
3. ALL REINFORCING SHALL BE GRADE 60

STATE OF TEXAS
OSAMA A. SHAHAWY
88476
LICENSED PROFESSIONAL ENGINEER
4/11/11

REV. No.	DATE	REVISION	BY
△			
△			
△			

PBSJ an Atkins company TBPE REG. # F-474

Texas Department of Transportation
Austin District
©2011 by TxDOT

SH 45 / O'CONNOR DRIVE AESTHETIC TREATMENT REINFORCEMENT DETAILS

SCALE: NTS — SHEET 2 OF 3

DESIGNED: RBR	FED. RD DIV. No.	STATE	PROJECT No.			HIGHWAY No.
CHECKED: OAS	6	TEXAS				LP 1/SH 45
DRAWN: RBR	STATE DISTRICT	COUNTY	CONTROL No.	SECTION No.	JOB No.	SHEET No.
CHECKED: OAS	AUSTIN	WILLIAMSON	0683	06	027	499

DATE: 4/11/2011 TIME: 10:39:41 AM
PLOT DRIVER: RD*11x17*PDF.plt
PEN TABLE: plotordr*ocon.tbl
FILE: r:\trans-design\o'connor\cadd\bdg\aesth\0C45AEreinf02.dgn

MULTI COLUMN BENTS

TABLE OF VARIABLE QUANTITIES (ARCH)

BRIDGE	BENT	" A "	BARS G1 #6 x 2'-7"		BARS G2 #6 x 3'-11"		BARS G3 #6 x 5'-7"		BARS G4 #6 x 11'-0"		BARS G5			BARS K #6			BARS Q #5			REINF STEEL
		FT	NO	WEIGHT	NO	WEIGHT	NO	WEIGHT	NO	WEIGHT	NO	LENGTH	WEIGHT	NO	LENGTH	WEIGHT	NO	LENGTH	WEIGHT	LB
EBFR	6	8.000	4	16	4	24	4	34	4	66	4	10'-9"	65	10	11'-1"	166	24	11'-9"	294	664
EBFR	7	8.000	4	16	4	24	4	34	4	66	4	10'-9"	65	10	11'-1"	166	24	11'-9"	294	664
EBFR	8	8.000	4	16	4	24	4	34	4	66	4	10'-9"	65	10	11'-1"	166	24	11'-9"	294	664
EBFR	9	8.000	4	16	4	24	4	34	4	66	4	10'-9"	65	10	11'-1"	166	24	11'-9"	294	664
EBFR	10	8.000	4	16	4	24	4	34	4	66	4	10'-9"	65	10	11'-1"	166	24	11'-9"	294	664
EBFR	11	8.000	4	16	4	24	4	34	4	66	4	10'-9"	65	10	11'-1"	166	24	11'-9"	294	664
EBFR	12	8.000	4	16	4	24	4	34	4	66	4	10'-9"	65	10	11'-1"	166	24	11'-9"	294	664
EBFR	13	8.000	4	16	4	24	4	34	4	66	4	10'-9"	65	10	11'-1"	166	24	11'-9"	294	664
EBFR	14	8.000	4	16	4	24	4	34	4	66	4	9'-6"	57	10	14'-1"	211	30	11'-9"	368	775
RESDC	6	8.000	4	16	4	24	4	34	4	66	4	15'-9"	94	10	16'-0"	241	37	11'-9"	453	927
RESDC	7	8.000	4	16	4	24	4	34	4	66	4	9'-7"	58	10	9'-11"	149	22	11'-9"	270	615
WBFR	2	8.000	4	16	4	24	4	34	4	66	4	16'-11"	101	10	17'-2"	258	18	11'-9"	221	719
WBFR	3	8.000	4	16	4	24	4	34	4	66	4	16'-11"	101	10	17'-2"	258	18	11'-9"	221	719
WBFR	4	8.000	4	16	4	24	4	34	4	66	4	16'-11"	101	10	17'-2"	258	18	11'-9"	221	719
WBFR	5	8.000	4	16	4	24	4	34	4	66	4	16'-11"	101	10	17'-2"	258	18	11'-9"	221	719
WBFR	6	8.000	4	16	4	24	4	34	4	66	4	16'-11"	101	10	17'-2"	258	18	11'-9"	221	719
WBFR	7	8.000	4	16	4	24	4	34	4	66	4	16'-11"	101	10	17'-2"	258	18	11'-9"	221	719
WBFR	8	8.000	4	16	4	24	4	34	4	66	4	16'-11"	101	10	17'-2"	258	18	11'-9"	221	719
WBFR	9	8.000	4	16	4	24	4	34	4	66	4	16'-11"	101	10	17'-2"	258	18	11'-9"	221	719
WBFR	10	8.000	4	16	4	24	4	34	4	66	4	16'-11"	101	10	17'-2"	258	18	11'-9"	221	719
WBFR	11	8.000	4	16	4	24	4	34	4	66	4	16'-11"	101	10	17'-2"	258	18	11'-9"	221	719
RNWDC	2	8.000	4	16	4	24	4	34	4	66	4	11'-5"	68	10	11'-8"	176	20	11'-9"	245	628
RNWDC	3	8.000	4	16	4	24	4	34	4	66	4	11'-5"	68	10	11'-8"	176	20	11'-9"	245	628
RNWDC	4	8.000	4	16	4	24	4	34	4	66	4	11'-5"	68	10	11'-8"	176	20	11'-9"	245	628
RNWDC	5	8.000	4	16	4	24	4	34	4	66	4	11'-5"	68	10	11'-8"	176	20	11'-9"	245	628
RNWDC	6	8.000	4	16	4	24	4	34	4	66	4	11'-5"	68	10	11'-8"	176	20	11'-9"	245	628
RNWDC	6	8.000	4	16	4	24	4	34	4	66	4	11'-5"	68	10	11'-8"	176	20	11'-9"	245	628
RNWDC	7	8.000	4	16	4	24	4	34	4	66	4	11'-5"	68	10	11'-8"	176	20	11'-9"	245	628
RNWDC	8	8.000	4	16	4	24	4	34	4	66	4	11'-5"	68	10	11'-8"	176	20	11'-9"	245	628
RNWDC	9	8.000	4	16	4	24	4	34	4	66	4	12'-5"	75	10	12'-9"	191	23	11'-9"	282	687

MULTI COLUMN BENTS

TABLE OF VARIABLE QUANTITIES (ARCH)

BRIDGE	BENT	"A"	"B"	BARS G1 #6 x 2'-7"		BARS G2 #6 x 3'-11"		BARS G3 #6 x 5'-7"		BARS G4 #6 x 11'-0"		BARS G5			BARS G6			BARS K1 #6			BARS K2 #6			BARS Q #5 x 11'-9"		REINF STEEL
		FT	FT	NO	WEIGHT	NO	WEIGHT	NO	WEIGHT	NO	WEIGHT	NO	LENGTH	WEIGHT	NO	LENGTH	WEIGHT	NO	LENGTH	WEIGHT	NO	LENGTH	WEIGHT	NO	WEIGHT	LB
EBFR	2	7.500	8.000	8	31	8	47	8	67	8	132	6	19'-3"	174	8	9'-0"	108	10	9'-4"	140	10	7'-0"	105	33	404	995
EBFR	3	7.500	8.000	8	31	8	47	8	67	8	132	6	19'-3"	174	8	9'-0"	108	10	9'-4"	140	10	7'-0"	105	35	429	1020
EBFR	4	7.500	8.000	8	31	8	47	8	67	8	132	6	19'-3"	174	8	9'-0"	108	10	9'-0"	135	10	7'-0"	105	40	490	1076
EBFR	5	6.500	7.137	8	31	8	47	8	67	8	132	6	17'-3"	156	6	8'-0"	72	4	8'-0"	48	16	6'-7"	158	47	576	1057
WBFR	12	7.500	8.000	8	31	8	24	8	67	8	132	8	19'-3"	173	8	9'-0"	108	10	9'-0"	135	10	11'-2"	167	33	404	967
WBFR	13	7.500	8.000	8	31	8	24	8	67	8	132	8	19'-3"	173	8	9'-0"	108	10	9'-0"	135	10	11'-2"	167	33	404	967
WBFR	14	7.500	8.000	8	31	8	24	8	67	8	132	6	22'-1"	199	8	9'-0"	108	10	9'-0"	135	10	12'-6"	188	36	441	1029
WBFR	15	7.500	8.000	8	31	8	24	8	67	8	132	6	26'-2"	235	8	9'-0"	108	10	9'-0"	135	10	14'-7"	219	40	490	1115
O'Connor	2	7.875	8.000	16	62	16	94	16	134	16	264	18	20'-0"	541	12	9'-3"	166	8	9'-5"	113	24	11'-6"	415	72	882	2090

STATE OF TEXAS
OSAMA A. SHAHAWY
88476
LICENSED
PROFESSIONAL ENGINEER
4/11/11

REV. No.	DATE	REVISION	BY
△			
△			
△			

PBSJ
an Atkins company TBPE REG. # F-474

Texas Department of Transportation
Austin District
©2011 by TxDOT

SH 45 / O'CONNOR DRIVE AESTHETIC TREATMENT REINFORCEMENT DETAILS

SCALE: NTS

SHEET 3 OF 3

DESIGNED: RBR	FED. RD DIV. No.	STATE	PROJECT No.		HIGHWAY No.
CHECKED: OAS	6	TEXAS			LP 1/SH 45
DRAWN: RBR	STATE DISTRICT	COUNTY	CONTROL No.	SECTION No.	JOB No.	SHEET No.
CHECKED: OAS	AUSTIN	WILLIAMSON	0683	06	027	500

DATE: 4/11/2011 TIME: 10:39:42 AM
PLOT DRIVER: RD*11x17*PDF.plt
PEN TABLE: plotdr*ocon.tbl
FILE: r:\trans-design\o'connor\cadd\bdg\aesth\0C45AEreinf03.dgn

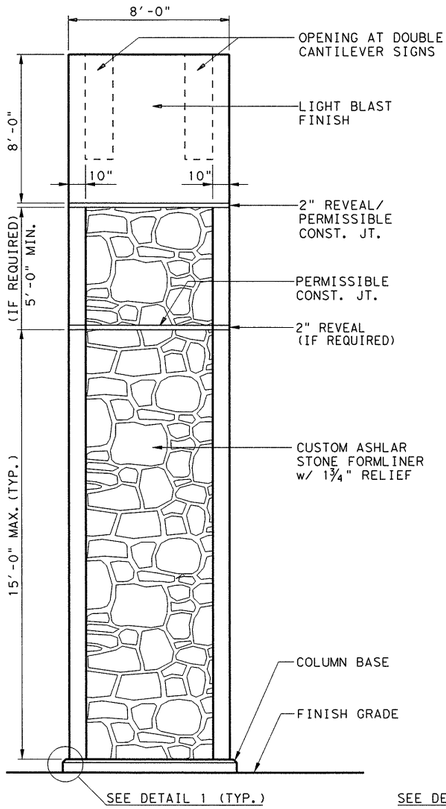

SIGN COLUMN EXTERIOR ELEVATION

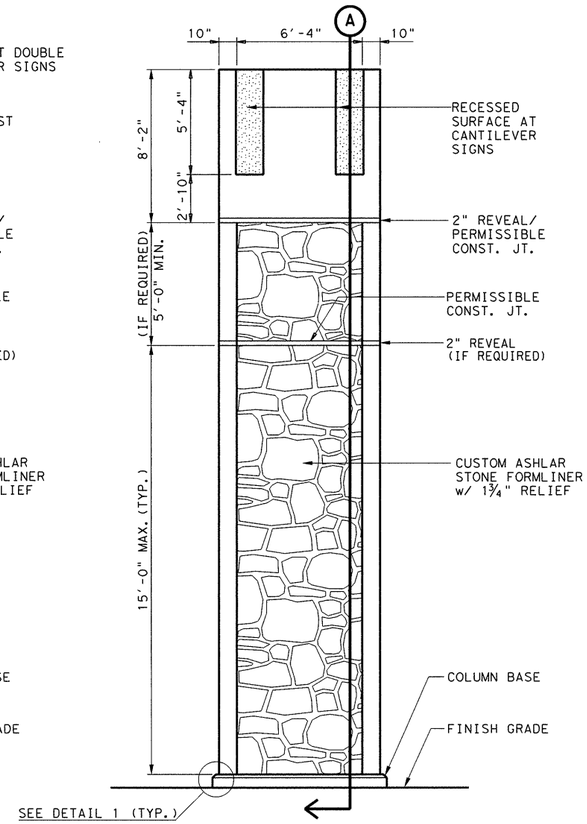

SIGN COLUMN INTERIOR ELEVATION

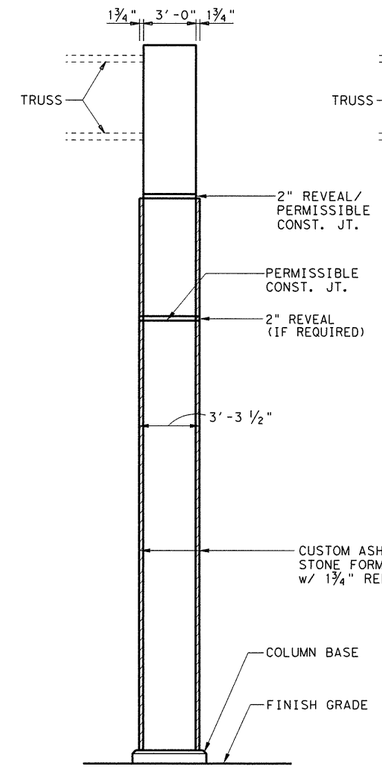

SIGN COLUMN END ELEVATION

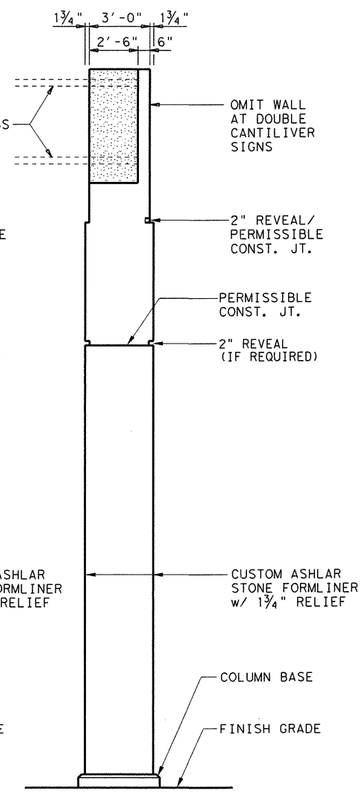

SECTION A

GENERAL NOTES:

1. MIN. DISTANCE BETWEEN CANTILEVER SIGN SUPPORT AND CUSTOM RETAINING WALL COPING IS 1'-6"
2. DELETE CUSTOM ASHLAR STONE FORMLINER FROM INSIDE FACE BETWEEN TOP OF COLUMN BASE AND TOP OF CUSTOM RETAINING WALL COPING.

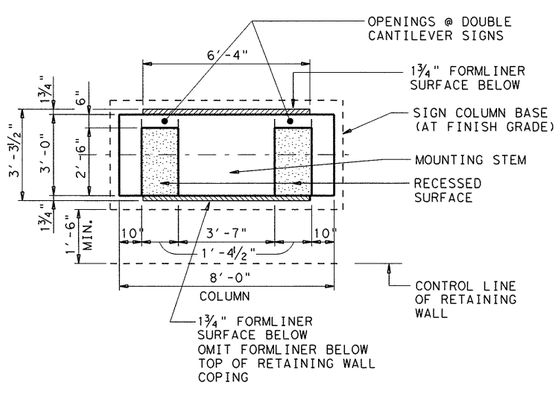

PLAN DETAIL

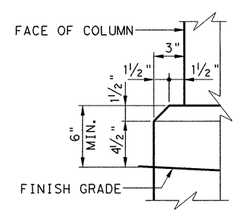

DETAIL1

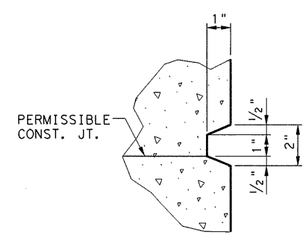

2" REVEAL DETAIL

STATE OF TEXAS
OSAMA A. SHAHAWY
88476
LICENSED PROFESSIONAL ENGINEER
4/11/11

REV. No.	DATE	REVISION	BY
△			
△			
△			

PBSJ an Atkins company TBPE REG. # F-474

Texas Department of Transportation Austin District

©2011 by TxDOT

SH 45 / O'CONNOR DRIVE AESTHETIC DESIGN STANDARD

OVERHEAD SIGN SUPPORTS

CANTILEVER OVERHEAD SIGN SUPPORT (COSS)

COLUMN DETAILS (SHEET 1 OF 3)

SCALE: NTS — SHEET 1 OF 6

DESIGNED: SS	FED. RD DIV. No.	STATE	PROJECT No.			HIGHWAY No.
CHECKED: OAS	6	TEXAS				LP 1/SH 45
DRAWN: RBR	STATE DISTRICT	COUNTY	CONTROL No.	SECTION No.	JOB No.	SHEET No.
CHECKED: OAS	AUSTIN	WILLIAMSON	0683	06	027	501

(30/48) ISSUE DATE: NOVEMBER 2001

DATE: 4/11/2011 TIME: 10:39:44 AM

PLOT DRIVER: RD*11x17*PDF.plt
PEN TABLE: plotord*ocon.tbl
FILE: r:\trans-design\o'connor\cadd\bdg\AESTH\OC45AEstd01.dgn

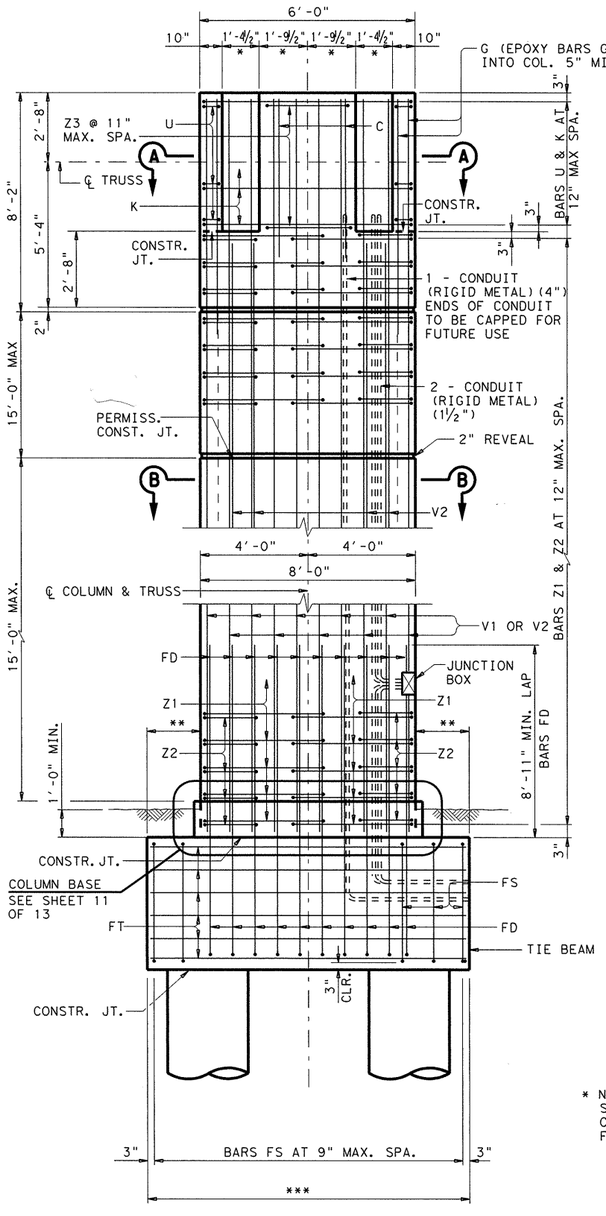

FRONT ELEVATION

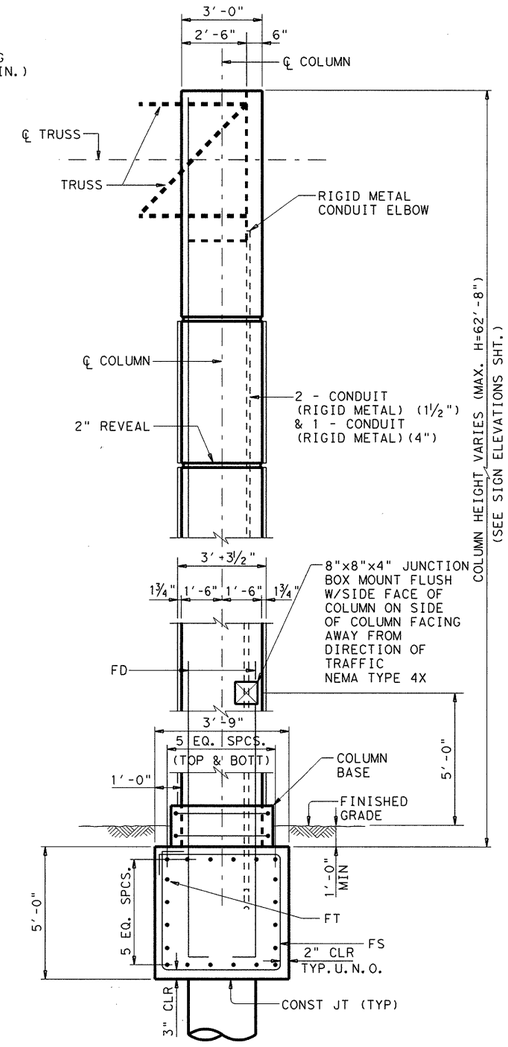

SIDE ELEVATION

* NOTE: DIMENSIONS SHOWN ARE FOR A 4'-0" BY 4'-0" CANTILEVER SIGN TRUSS. DIMENSIONS OF MOUNTING STEM , NO. & LOCATION OF BARS C & V1 AND DIMENSIONS OF BARS Z3 SHALL BE ADJUSTED FOR OTHER TRUSS SIZES.

** 2'-0" FOR 30" DIA. DRILLED SHAFT, 3'-0" FOR 36" DIA. DRILLED SHAFT
*** 12'-0" FOR 30" DIA. DRILLED SHAFT, 14'-0" FOR 36" DIA. DRILLED SHAFT

COSS COLUMN

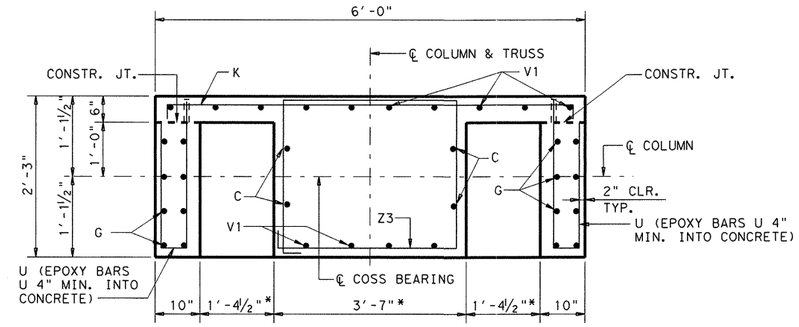

SECTION A-A AT CANTILEVER

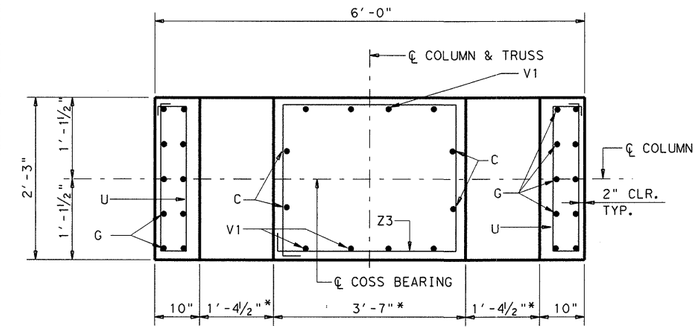

SECTION A-A AT DOUBLE CANTILEVER

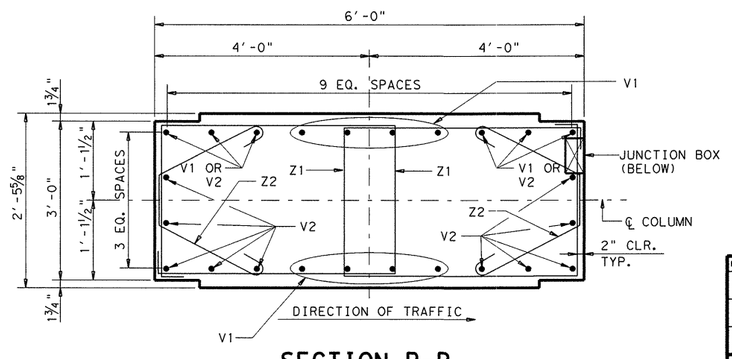

SECTION B-B

STATE OF TEXAS
OSAMA A. SHAHAWY
88476
LICENSED PROFESSIONAL ENGINEER
4/11/11

REV. No.	DATE	REVISION	BY
△			
△			
△			

PBSJ an Atkins company TBPE REG. # F-474

Texas Department of Transportation Austin District
©2011 by TxDOT

SH 45 / O'CONNOR DRIVE
AESTHETIC DESIGN STANDARD
OVERHEAD SIGN SUPPORTS
CANTILEVER OVERHEAD SIGN SUPPORT (COSS)
COLUMN DETAILS (SHEET 2 OF 3)

SCALE: NTS — SHEET 2 OF 6

DESIGNED: SS	FED. RD DIV. No.	STATE	PROJECT No.		HIGHWAY No.		
CHECKED: OAS	6	TEXAS			LP 1/SH 45		
DRAWN: RBR	STATE DISTRICT	COUNTY	CONTROL No.	SECTION No.	JOB No.	SHEET No.	
CHECKED: OAS	AUSTIN	WILLIAMSON	0683	06	027	502	

31/48 ISSUE DATE: NOVEMBER 2001

DATE: 4/11/2011 TIME: 10:39:46 AM

PLOT DRIVER: RD*11x17*PDF.plt
PEN TABLE: plotordr*ocon.tbl
FILE: r:\trans-design\o'connor\coadd\bdg\AESTH\OC45AEstd02.dgn

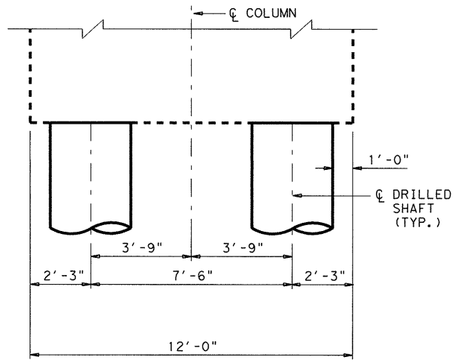

FRONT ELEVATION

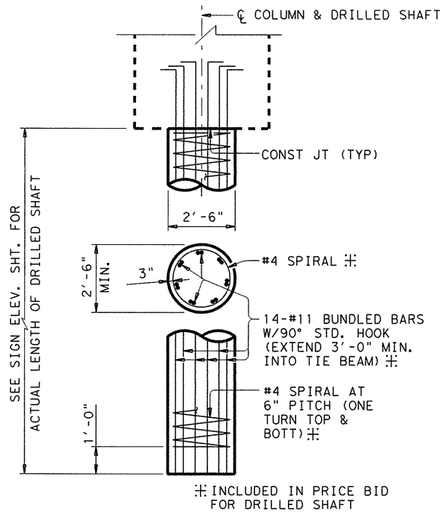

SIDE ELEVATION

30" DIA. DRILLED SHAFT

(DESIGN HT. (H) <= 30')

NOTE: SEE NOTE 6 ON SHEET 1 OF 13

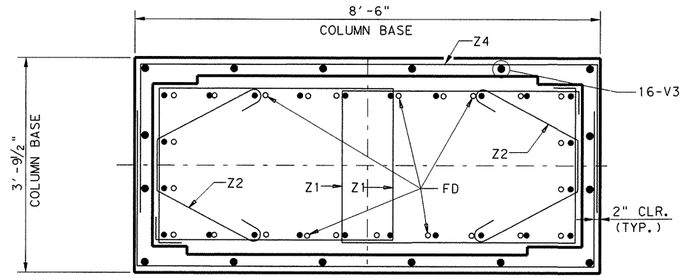

SECTION C-C

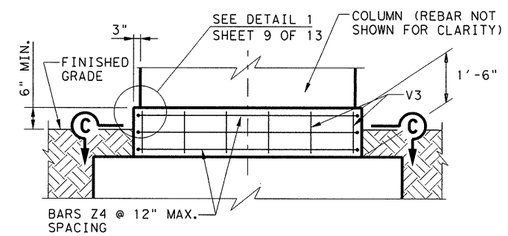

COLUMN BASE ELEVATION

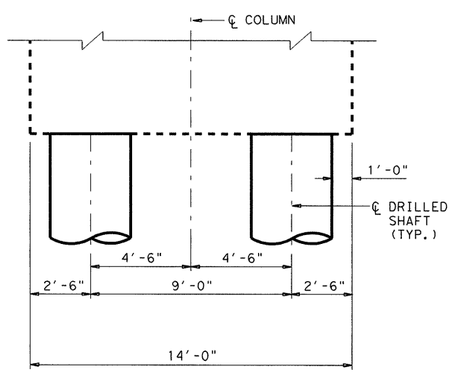

FRONT ELEVATION

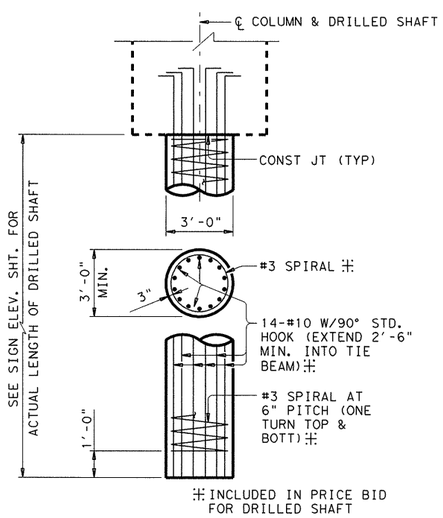

SIDE ELEVATION

36" DIA. DRILLED SHAFT

(30' < DESIGN HT. (H) <= 60')

NOTE: SEE NOTE 6 ON SHEET 1 OF 13

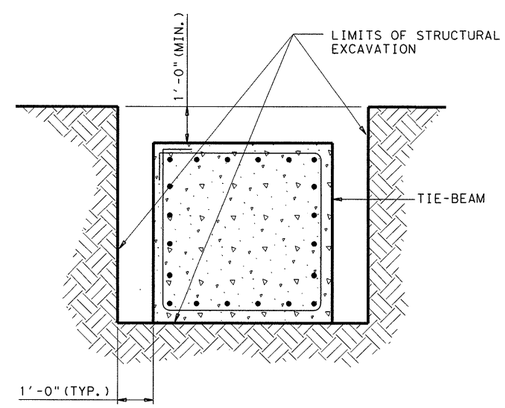

TEMPORARY SPECIAL SHORING DETAIL

STATE OF TEXAS
OSAMA A. SHAHAWY
88476
LICENSED PROFESSIONAL ENGINEER
4/11/11

REV. No.	DATE	REVISION	BY
△			
△			
△			

PBSJ an Atkins company TBPE REG. # F-474

Texas Department of Transportation
Austin District
©2011 by TxDOT

SH 45 / O'CONNOR DRIVE
AESTHETIC DESIGN STANDARD
OVERHEAD SIGN SUPPORTS
CANTILEVER OVERHEAD SIGN SUPPORT (COSS)
COLUMN DETAILS (SHEET 3 OF 3)

SCALE: NTS — SHEET 3 OF 6

DESIGNED: SS	FED. RD DIV. No.	STATE	PROJECT No.		HIGHWAY No.	
CHECKED: OAS	6	TEXAS			LP 1/SH 45	
DRAWN: RBR	STATE DISTRICT	COUNTY	CONTROL No.	SECTION No.	JOB No.	SHEET No.
CHECKED: OAS	AUSTIN	WILLIAMSON	0683	06	027	503

32/48 ISSUE DATE: NOVEMBER 2001

DATE: 4/11/2011 TIME: 10:39:47 AM

PLOT DRIVER: RD*11x17*PDF.plt
PEN TABLE: plotordr*ocon.tbl
FILE: r:\trans-design\o'connor\cadd\bdg\AESTH\0C45AEstd03.dgn

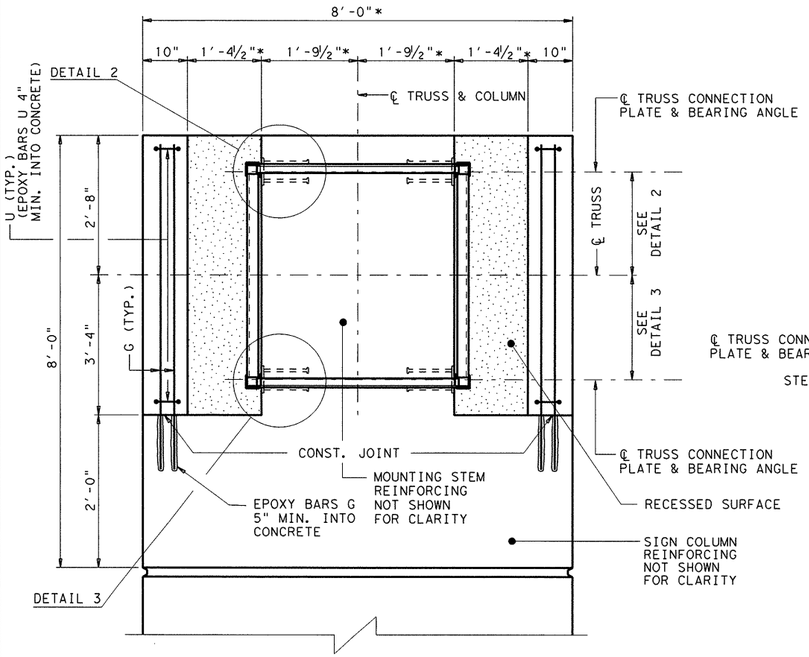

* DIMENSIONS SHOWN ARE FOR A 4'-0" BY 4'-0" CANTILEVER SIGN TRUSS. DIMENSIONS OF MOUNTING STEM , NO. & LOCATION OF BARS C & V1 AND DIMENSIONS OF BARS Z3 SHALL BE ADJUSTED FOR OTHER TRUSS SIZES.

COLUMN ELEVATION AT TRUSS CONNECTION

NOTES:

1. SEE NOTE 11 ON SHEET 1 OF 13
2. 10" CHEEKWALLS SHALL BE CONSTRUCTED AFTER TRUSS IS ERECTED.

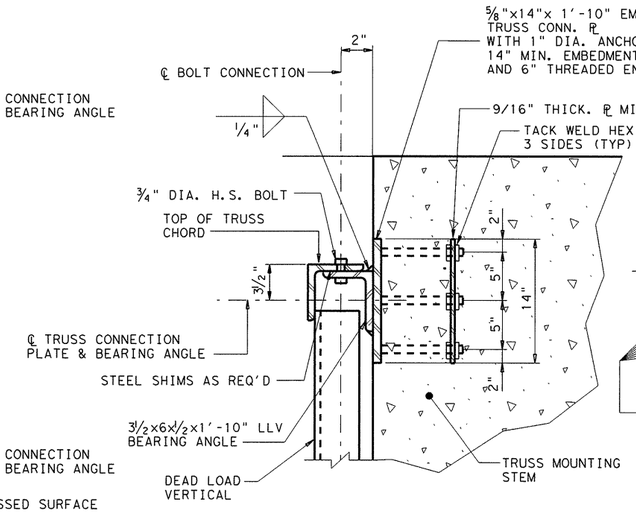

DETAIL 2
(TOP CONDITION)

NOTE:

ALL ANCHOR BOLTS SHALL BE ASTM F 1554 GRADE 55 WITH PLAIN A563 HEX NUT, OR EQUIVALENT.

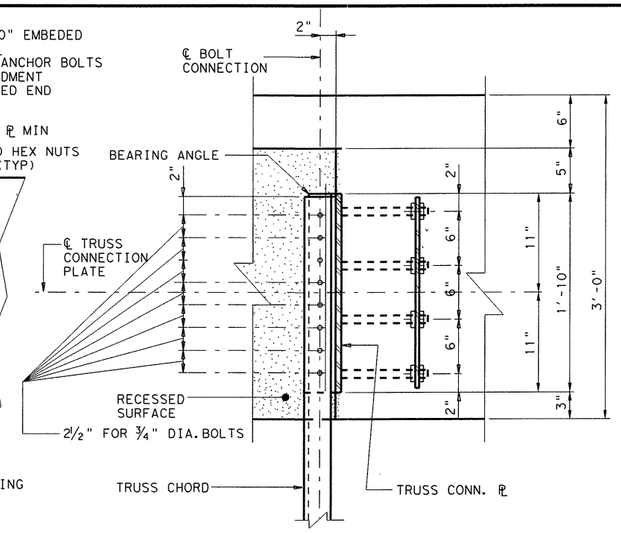

TRUSS CONNECTION PLAN

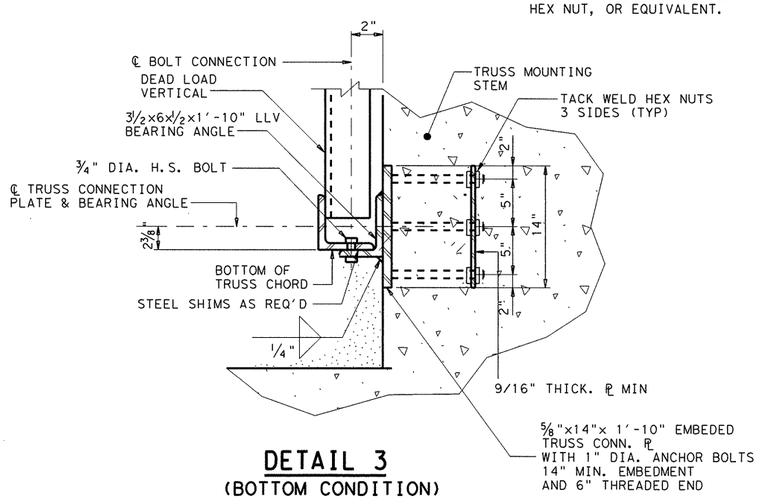

DETAIL 3
(BOTTOM CONDITION)

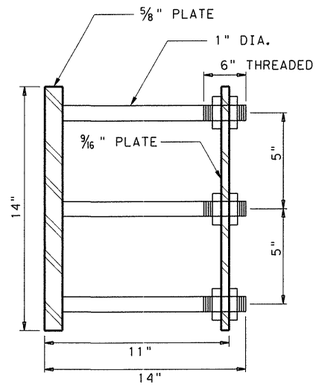

TRUSS CONNECTION PLATE

TABLE OF ESTIMATED QUANTITIES				
COLUMN ◪				
Bar	No.	Size	Length	Weight
C	4	# 8	8'- 8"	93
U	14	# 4	5'- 5"	51
G	16	# 5	6'- 5"	107
FD	24	#11	15'- 8"	1998
FS	17	# 6	20'- 3"	517
FT	20	# 8	11'- 8"	623
K	7	# 4	8'- 3"	39
V_1	14	#11	19'- 10"	1475
V_2	10	#11	13'- 10"	735
Z_1	28	# 4	16'- 7"	310
Z_2	28	# 4	5'- 7"	104
Z_3	7	# 6	13'- 8"	144
V_3	16	# 6	1'- 2"	28
Z_4	6	# 4	13'- 11"	56
Reinforcing Steel			Lb	6280
Class "C" Concrete *			CY	29.1
Temp. Special Shoring**			SF	252

◪ COLUMN QUANTITIES BASED ON A COLUMN HEIGHT OF 20'-0" AND A 4'-0" x 4'-0" CANTELEVER SIGN TRUSS. QUANTITIES SHOWN INCLUDE COLUMN, COLUMN BASE, AND TIE BEAM.

ADJUST REINFORCING STEEL TOTAL BY 158 LBS. AND CONCRETE BY 1.0 C.Y. FOR EACH FOOT VARIATION IN H = 20'-0"

* FOR COLUMNS GREATER THAN 30' HIGH, ADD 1.85 C.Y. OF CONCRETE AND 198 LBS. OF STEEL TO ACCOUNT FOR LARGER TIE BEAM.

** FOR COLUMNS GREATER THAN 30' HIGH, ADD 24 S.F. TO TEMPORARY SPECIAL SHORING QUANTITY.

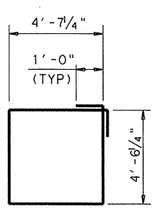

BARS FS

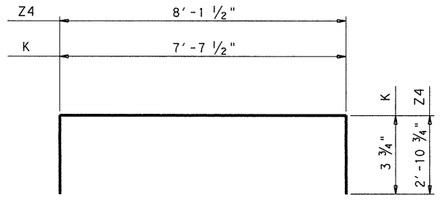

BARS K & Z4

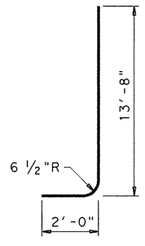

BARS FD

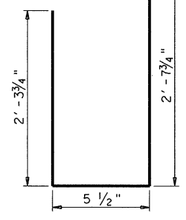

BAR U

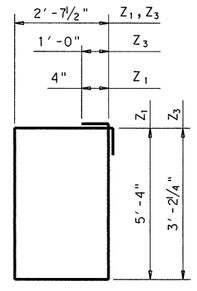

BARS Z1 & Z3

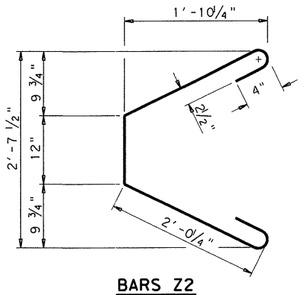

BARS Z2

33/48 ISSUE DATE: NOVEMBER 2001

STATE OF TEXAS
OSAMA A. SHAHAWY
88476
LICENSED PROFESSIONAL ENGINEER
4/11/11

REV. No.	DATE	REVISION	BY
△			
△			
△			

PBSJ an Atkins company TBPE REG. # F-474

Texas Department of Transportation Austin District

©2011 by TxDOT

SH 45 / O'CONNOR DRIVE
AESTHETIC DESIGN STANDARD
OVERHEAD SIGN SUPPORTS
CANTILEVER OVERHEAD SIGN SUPPORT (COSS)
SINGLE CANTILEVER TRUSS MOUNTING DETAIL

SCALE: NTS — SHEET 4 OF 6

DESIGNED: SS	FED. RD DIV. No.	STATE	PROJECT No.			HIGHWAY No.	
CHECKED: OAS	6	TEXAS				LP 1/SH 45	
DRAWN: RBR	STATE DISTRICT	COUNTY		CONTROL No.	SECTION No.	JOB No.	SHEET No.
CHECKED: OAS	AUSTIN	WILLIAMSON		0683	06	027	504

DATE: 4/11/2011 TIME: 10:39:49 AM
PLOT DRIVER: RD*11x17*PDF.pltr
PEN TABLE: plotordr*ocon.tbl
FILE: r:\trans-design\o'connor\cadd\bdg\AESTH\OC45AEstd04.dgn

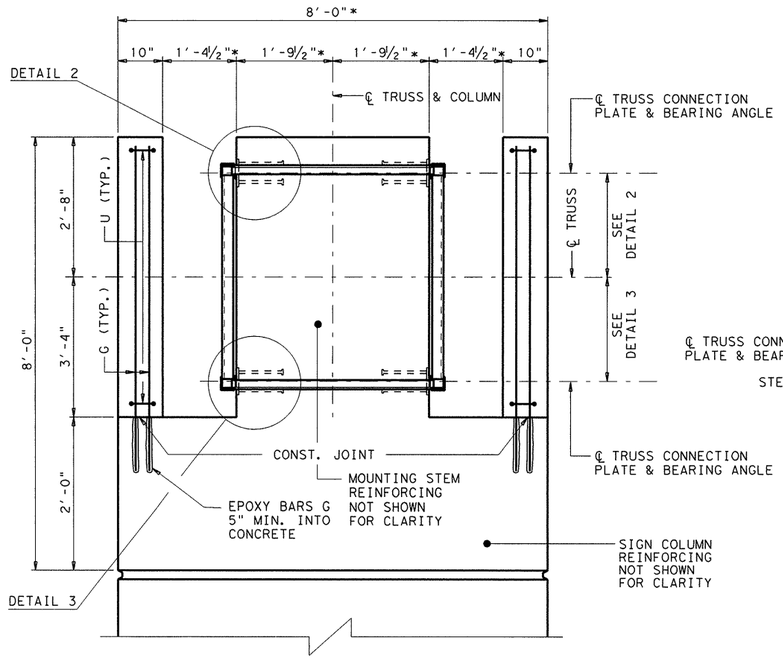

* DIMENSIONS SHOWN ARE FOR A 4'-0" BY 4'-0" CANTILEVER SIGN TRUSS. DIMENSIONS OF MOUNTING STEM , NO. & LOCATION OF BARS C & V1 AND DIMENSIONS OF BARS Z3 SHALL BE ADJUSTED FOR OTHER TRUSS SIZES.

COLUMN ELEVATION AT TRUSS CONNECTION

NOTES:

1. SEE NOTE 11 ON SHEET 1 OF 13
2. 10" CHEEKWALLS SHALL BE CONSTRUCTED AFTER TRUSS IS ERECTED.

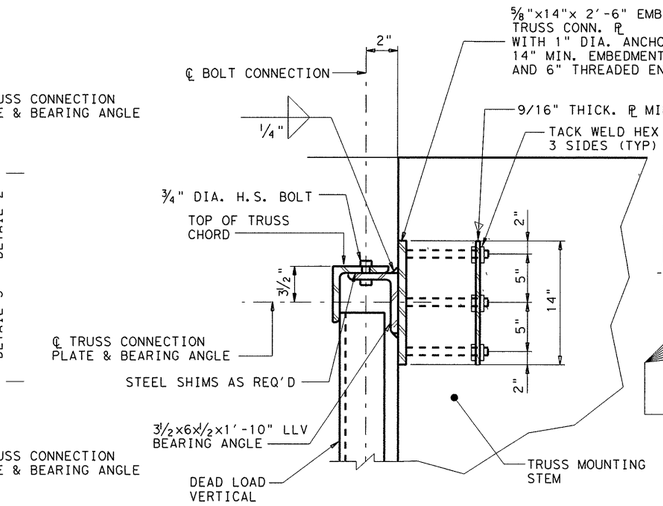

DETAIL 2
(TOP CONDITION)

NOTE:

ALL ANCHOR BOLTS SHALL BE ASTM F 1554 GRADE 55 WITH PLAIN A563 HEX NUT, OR EQUIVALENT.

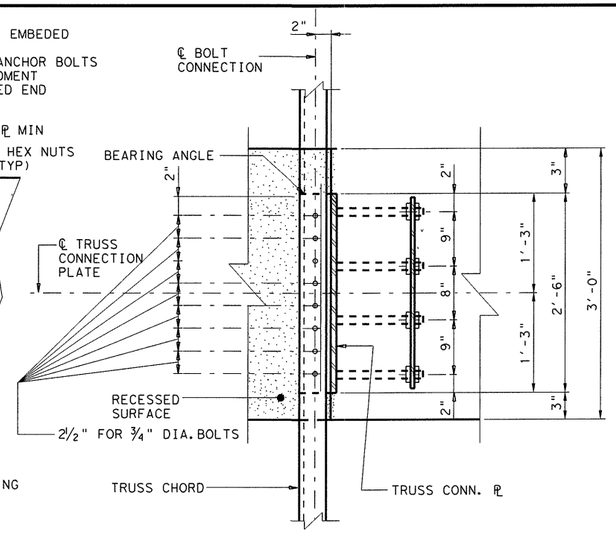

TRUSS CONNECTION PLAN

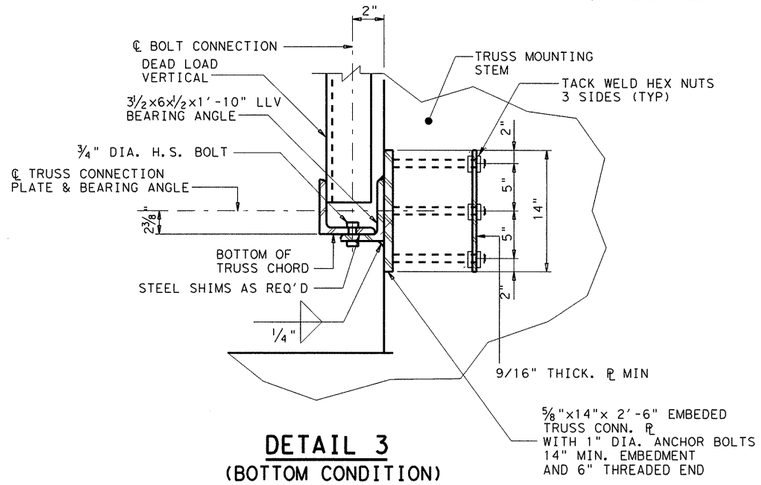

DETAIL 3
(BOTTOM CONDITION)

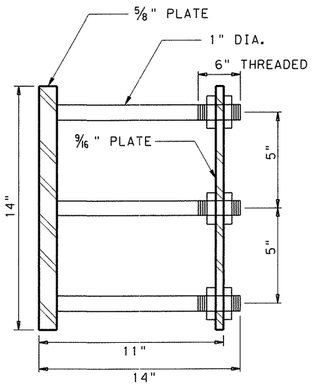

TRUSS CONNECTION PLATE

TABLE OF ESTIMATED QUANTITIES				
COLUMN ◪				
Bar	No.	Size	Length	Weight
C	4	# 8	8'- 8"	93
U	14	# 4	6'- 10"	64
G	20	# 5	6'- 5"	134
FD	24	#11	15'- 8"	1998
FS	17	# 6	20'- 3"	517
FT	20	# 8	11'- 8"	623
V_1	8	#11	19'- 10"	843
V_2	16	#11	13'- 10"	1176
Z_1	28	# 4	16'- 7"	310
Z_2	28	# 4	5'- 7"	104
Z_3	7	# 4	13'- 8"	144
V_3	16	# 6	1'- 2"	28
Z_4	6	# 4	13'- 11"	56
Reinforcing Steel			Lb	6090
Class "C" Concrete *			CY	28.8
Temp. Spl. Shoring **			SF	252

◪ COLUMN QUANTITIES BASED ON A COLUMN HEIGHT OF 20'-0" AND A 4'-0" x 4'-0" CANTELEVER SIGN TRUSS. QUANTITIES SHOWN INCLUDE COLUMN, COLUMN BASE, AND TIE BEAM.

ADJUST REINFORCING STEEL TOTAL BY 158 LBS. AND CONCRETE BY 1.0 C.Y. FOR EACH FOOT VARIATION IN H = 20'-0"

* FOR COLUMNS GREATER THAN 30' HIGH, ADD 1.85 C.Y. OF CONCRETE AND 198 LBS. OF STEEL TO ACCOUNT FOR LARGER TIE BEAM.

** FOR COLUMNS GREATER THAN 30' HIGH, ADD 24 S.F. TO TEMPORARY SPECIAL SHORING QUANTITY.

STATE OF TEXAS
OSAMA A. SHAHAWY
88476
LICENSED PROFESSIONAL ENGINEER
4/11/11

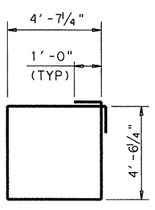

BARS FS

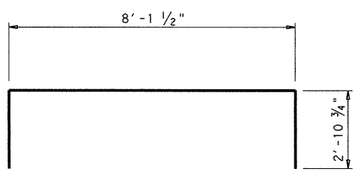

BARS Z4

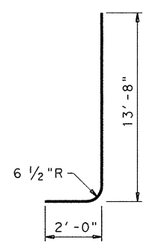

BARS FD

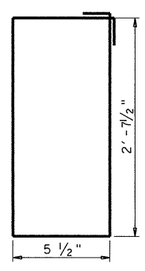

BAR U

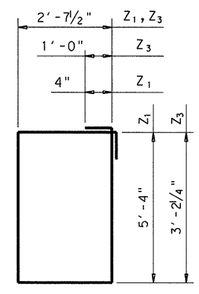

BARS Z1 & Z3

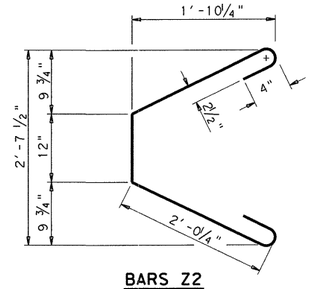

BARS Z2

(34/48) ISSUE DATE: NOVEMBER 2001

REV. No.	DATE	REVISION	BY
△			
△			
△			

PBSJ
an Atkins company
TBPE REG. # F-474

Texas Department of Transportation
Austin District
©2011 by TxDOT

SH 45 / O'CONNOR DRIVE
AESTHETIC DESIGN STANDARD
OVERHEAD SIGN SUPPORTS

CANTILEVER OVERHEAD SIGN SUPPORT (COSS)

DOUBLE CANTILEVER TRUSS MOUNTING DETAIL

SCALE: NTS — SHEET 5 OF 6

DESIGNED: SS	FED. RD DIV. No.	STATE	PROJECT No.			HIGHWAY No.
CHECKED: OAS	6	TEXAS				LP 1/SH 45
DRAWN: RBR	STATE DISTRICT	COUNTY	CONTROL No.	SECTION No.	JOB No.	SHEET No.
CHECKED: OAS	AUSTIN	WILLIAMSON	0683	06	027	505

DATE: 4/11/2011 TIME: 10:39:51 AM
PLOT DRIVER: RD*11x17*PDF.plt
PEN TABLE: plotordr*ocon.tbl
FILE: r:\trans-design\o'connor\cadd\bdg\AESTH\OC45AEstd05.dgn

DATE: 4/11/2011 TIME: 10:39:53 AM

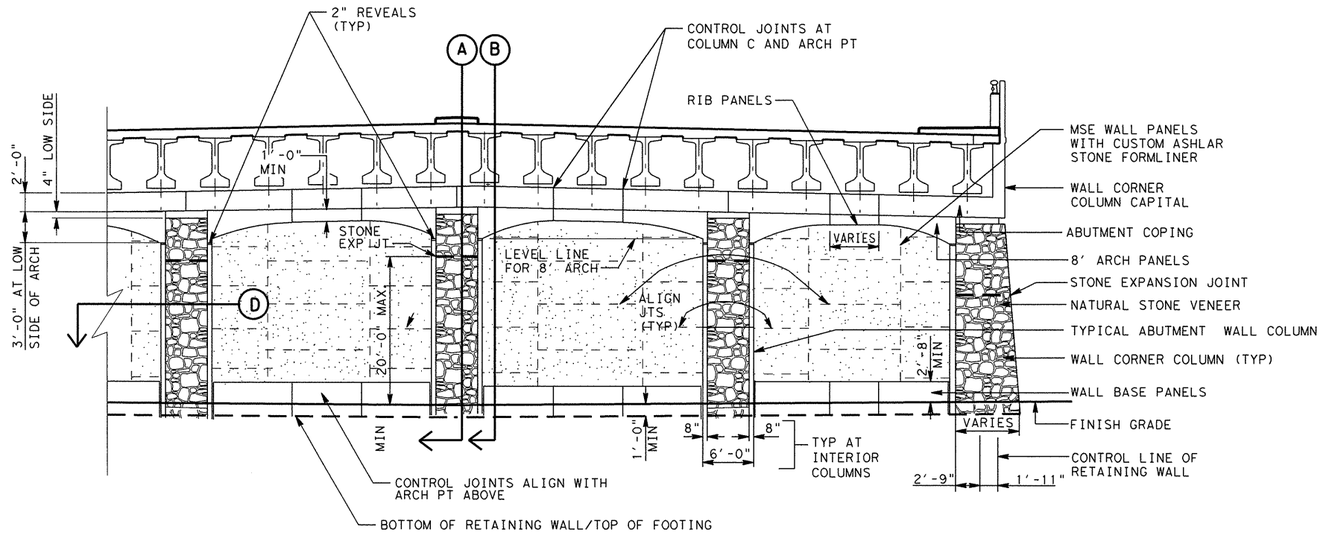

PARTIAL ABUTMENT FRONT ELEVATION

NOTES:

1. WALL FOOTINGS MUST BE DESIGNED TO CARRY NATURAL STONE VENEER DEAD LOAD IN ADDITION TO OTHER REQUIRED LOADS.
2. ALL EXPOSED CONCRETE EDGES SHALL RECEIVE A ¾" CHAMFER UNLESS OTHERWISE NOTED.
3. ALL REINFORCING STEEL SHALL BE GRADE 60; CONCRETE SHALL BE CLASS "C".
4. COPING AT ABUTMENT WALL SHALL BE CONSIDERED SUBSIDARY TO ITEM 423 "SPECIAL RETAINING WALL".

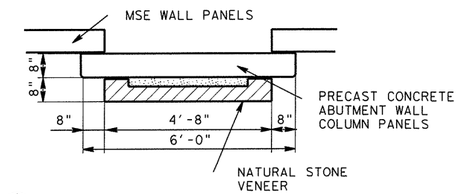

(D) ABUTMENT WALL COLUMN SECTION

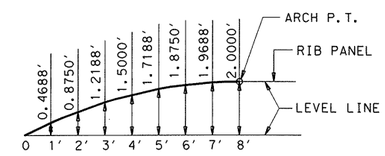

8' ARCH DETAIL

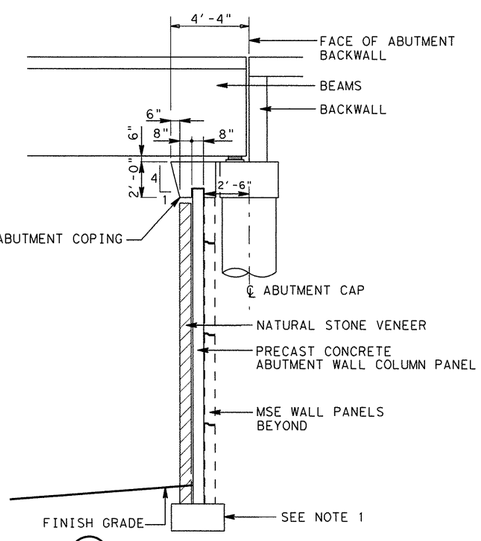

(A) ABUTMENT SECTION

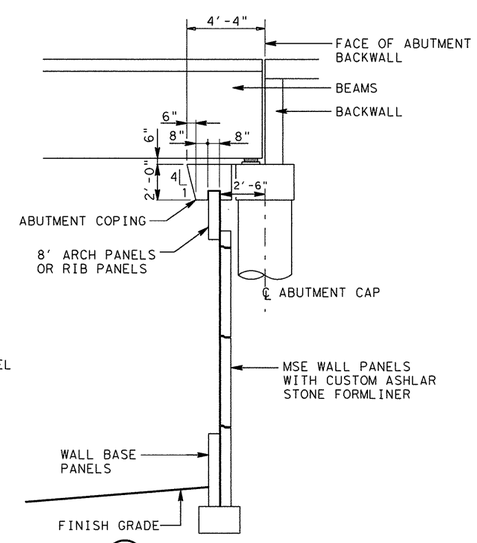

(B) ABUTMENT SECTION

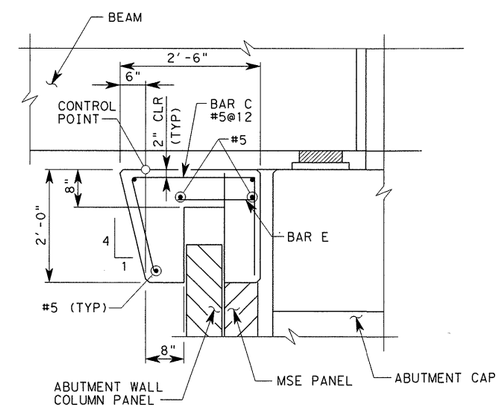

ABUTMENT COPING DETAIL

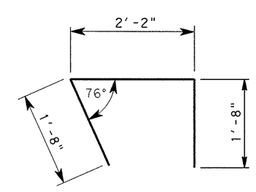

BAR C

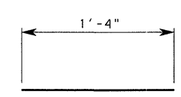

BAR E

STATE OF TEXAS
OSAMA A. SHAHAWY
88476
L. C. EVANS JR.
PROFESSIONAL ENGINEER
4/11/11

REV. No.	DATE	REVISION	BY
△			
△			
△			

PBSJ an Atkins company TBPE REG. # F-474

Texas Department of Transportation
Austin District
©2011 by TxDOT

SH 45 / O'CONNOR DRIVE
AESTHETIC DESIGN STANDARD
RETAINING WALLS AT BRIDGE ABUTMENTS

SCALE: NTS SHEET 6 OF 6

DESIGNED: DMH	FED. RD DIV. No.	STATE	PROJECT No.			HIGHWAY No.	
CHECKED: JMS	6	TEXAS				LP 1/SH 45	
DRAWN: DMH	STATE DISTRICT	COUNTY	CONTROL No.	SECTION No.	JOB No.	SHEET No.	
CHECKED: JMS	AUSTIN	WILLIAMSON	0683	06	027	506	

PLOT DRIVER: RD*11x17*PDF.pltr
PEN TABLE: plotordr*ocon.tbl
FILE: r:\trans-design\o'connor\cadd\bdg\aesth\0C45AEstd06.dgn

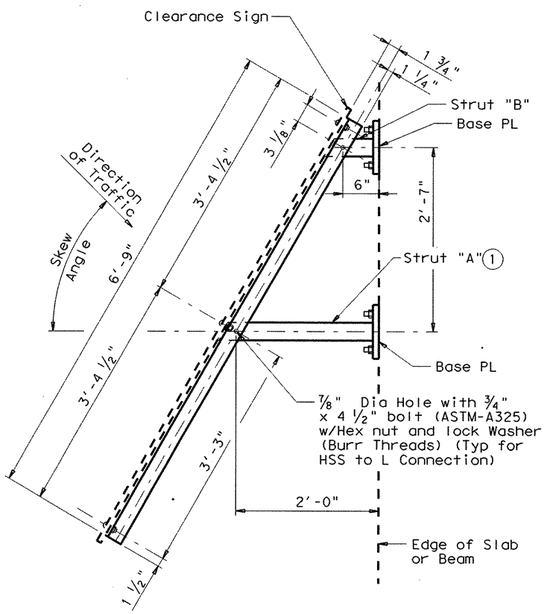

PLAN OF TYPE S MOUNT

(Used for Skews over 30°)

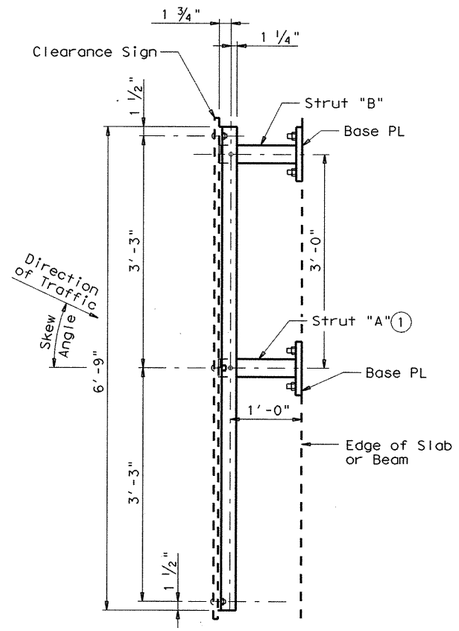

PLAN OF TYPE N MOUNT

(Used for 0° to 30° Skews)

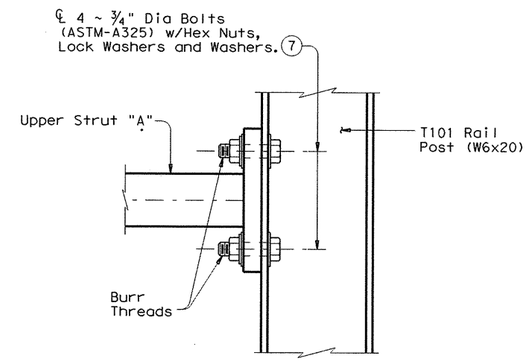

SHOWING ELEVATION VIEW OF CONNECTION AT T101 RAIL POST

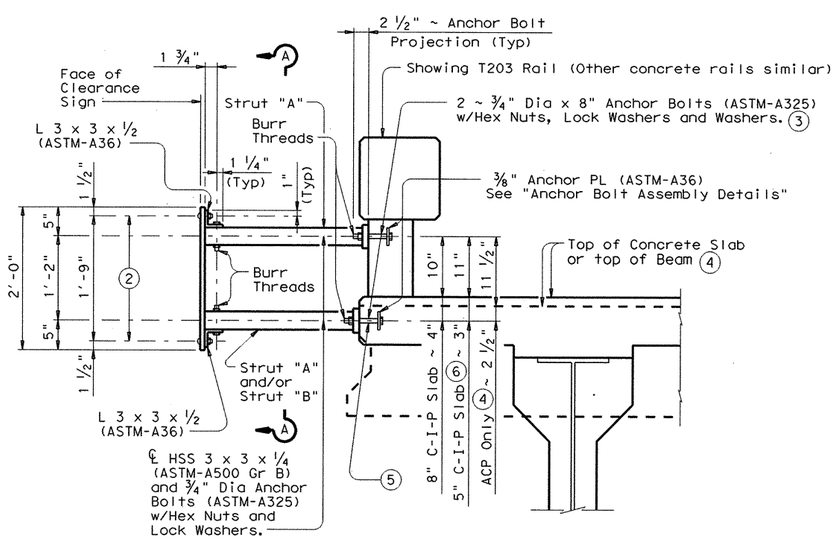

SECTION

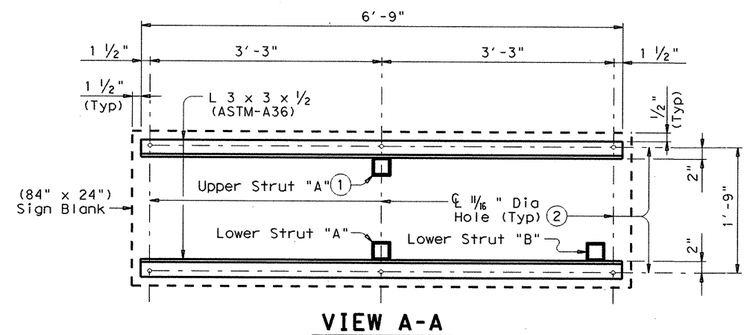

VIEW A-A

(1) Locate centerline of Strut A no closer than 12" from a vertical concrete edge.

(2) ℄ 5/8" Dia x 2" Hexagon Socket Button Head Cap Screws (ASTM A574) w/Hex Nuts. Attach hex nuts to L 3 x 3 x 1/2 by tack welding in two places. Threads shall have Class 3A fit tolerance in accordance ASME B1.1. Six screws required.

(3) Epoxy anchors utilizing 3/4" Dia A193 Grade B7 anchor rods (no expansion anchors) can be substituted for the anchor bolts detailed at all locations. Minimum pullout strength of epoxy anchors must exceed 7 kips, taking spacing and edge distances into consideration. Install according to the manufacturer's specifications. Min embedment allowed is 6". Galvanize anchor rods and lock washers and washers used with optional epoxy anchors.

(4) For Prestressed Concrete Box Beams and Dbl-T Beams topped with a 2 course surface treatment and ACP overlay.

(5) Anchor bolts to be cast in Box Beams and Dbl-T Beams topped with a 2 course surface treatment and ACP overlay. The Anchor Bolts w/Hex Nuts, Lock Washers and Anchor PL that is embeded in the beam will be provided by the beam fabricator.

(6) For Prestressed Concrete Box Beams, Slab Beams and Dbl-T Beams with a composite cast-in-place slab used as a topping.

(7) Field Drill 11/16" Holes in back of T101 Rail Post.

GENERAL NOTES:

This standard provides details to mount a vertical clearance sign (84" x 24") to bridges. Rail Types T6, T77, PR1 and PR2 are not accommodated.

The vertical face of clearance sign will be plumb unless otherwise approved by the Engineer.

All steel components shall be galvanized after fabrication unless otherwise noted.

The Engineer will furnish the clearance to be shown on the sign.

See Bridge Layout for sign location and mounting type (Type N or S).

Cost of furnishing, installing, relocating or removing a Clearance Sign will be included in unit price bid for "Aluminum Signs (Type A)".

One Sign Blank (84" x 24") is 14 SF.

Average steel weight for one complete Type N Mount is 209 Lb.

Average steel weight for one complete Type S Mount is 222 Lb.

Sign mounts will be paid for at the unit price bid for "Structural Steel (Misc)".

DISCLAIMER:
The use of this standard is governed by the "Texas Engineering Practice Act". No warranty of any kind is made by TxDOT for any purpose whatsoever. TxDOT assumes no responsibility for the conversion of this standard to other formats or for incorrect results or damages resulting from its use.

ACC:

LEVELS DISPLAYED

SHEET 1 OF 2

Texas Department of Transportation
Bridge Division

BRIDGE MOUNTED CLEARANCE SIGN ASSEMBLY

BMCS

FILE: bmcsstel.dgn	DN: TxDOT	CK: TxDOT	DW: TxDOT	CK: TxDOT
©TxDOT April 2006	DISTRICT	FEDERAL AID PROJECT		SHEET
REVISIONS 08-2007: Removed reference of W12-2P.	AUSTIN			507
	COUNTY		CONTROL-SECT-JOB	HIGHWAY
	WILLIAMSON		0683-06-027	SH 45, LOOP 1

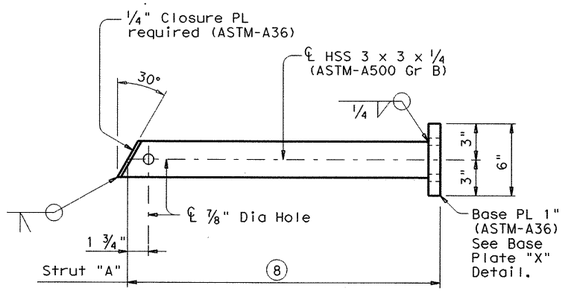

FOR T101, T411
AND C411 RAIL TYPES

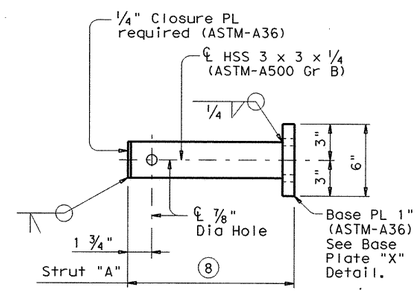

FOR T101, T411
AND C411 RAIL TYPES

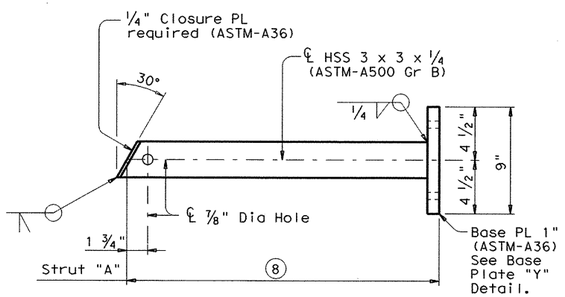

FOR T203, C203, T221, C221, T401,
T402, C402, T501, C501, T502, C502,
T503, T504, HT AND SSTR RAIL TYPES

UPPER STRUT DETAIL FOR (TYPE S MOUNT)

(Used for Skews over 30°)

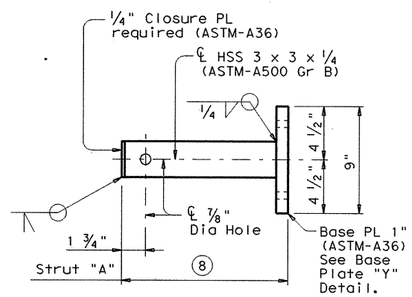

FOR T203, C203, T221, C221, T401,
T402, C402, T501, C501, T502, C502,
T503, T504, HT AND SSTR RAIL TYPES

UPPER STRUT DETAIL FOR (TYPE N MOUNT)

(Used for 0° to 30° Skews)

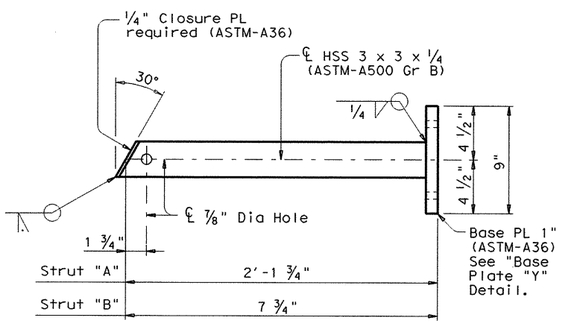

LOWER STRUT DETAILS FOR (TYPE S MOUNT)

(Used for Skews over 30°)

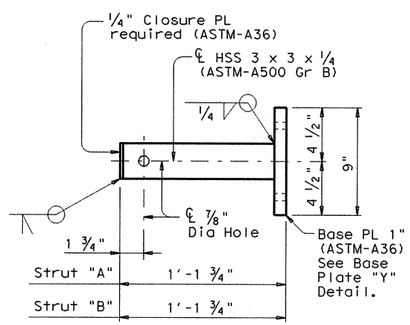

LOWER STRUT DETAILS FOR (TYPE N MOUNT)

(Used for 0° to 30° Skews)

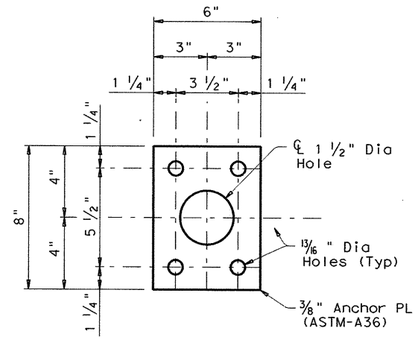

PLAN OF ANCHOR PLATE

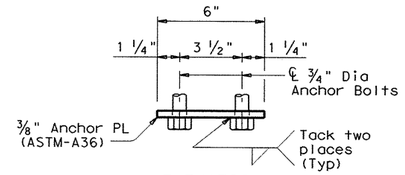

ELEVATION

ANCHOR BOLT ASSEMBLY DETAILS (3)

(USED ON UPPER BASE PLATE "X" WITH T411 & C411 RAIL TYPES)

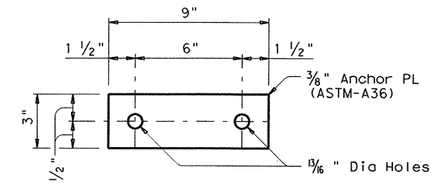

PLAN OF ANCHOR PLATE

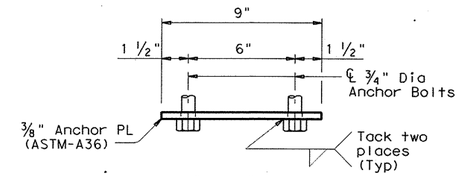

ELEVATION

ANCHOR BOLT ASSEMBLY DETAILS (3)

(USED ON UPPER AND/OR LOWER BASE PLATE "Y")

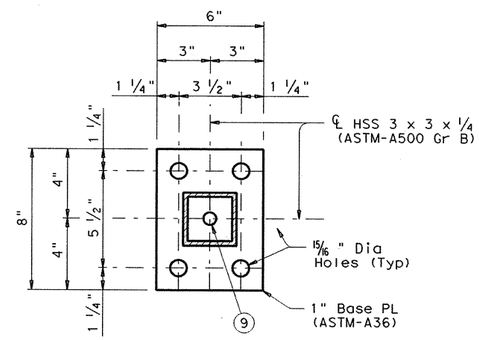

BASE PLATE "X" DETAIL

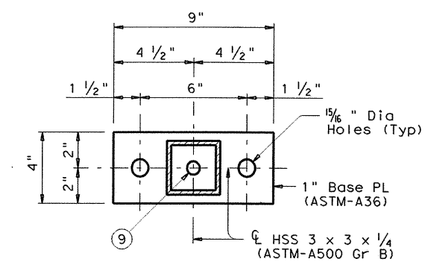

BASE PLATE "Y" DETAIL

(3) Epoxy anchors utilizing A193 Grade B7 anchor rods (no expansion anchors) can be substituted for the anchor bolts detailed at all locations. Minimum pullout strength of epoxy anchors must exceed 7 kips, taking spacing and edge distances into consideration. Install according to the manufacturer's specifications. Min embedment allowed is 6". Galvanize anchor rods and lock washers and washers used with optional epoxy anchors.

(8) Adjust length to accommodate edge of slab to back of rail for specific project conditions and to help plumb the vertical face of clearance sign.

(9) Hole required to drain zinc from base plate during galvanizing.

SHEET 2 OF 2

Texas Department of Transportation
Bridge Division

BRIDGE MOUNTED CLEARANCE SIGN ASSEMBLY

BMCS

FILE: bmcsstel.dgn	DN: TxDOT	CK: TxDOT	DW: TxDOT	CK: TxDOT
© TxDOT April 2006	DISTRICT	FEDERAL AID PROJECT		SHEET
REVISIONS 08-2007: Removed reference of W12-2P.	AUSTIN			508
	COUNTY		CONTROL-SECT-JOB	HIGHWAY
	WILLIAMSON		0683-06-027	SH 45 LOOP 1

DISCLAIMER:
The use of this standard is governed by the "Texas Engineering Practice Act". No warranty of any kind is made by TxDOT for any purpose whatsoever. TxDOT assumes no responsibility for the conversion of this standard to other formats or for incorrect results or damages resulting from its use.

LEVELS DIS-----60
ACC:
1

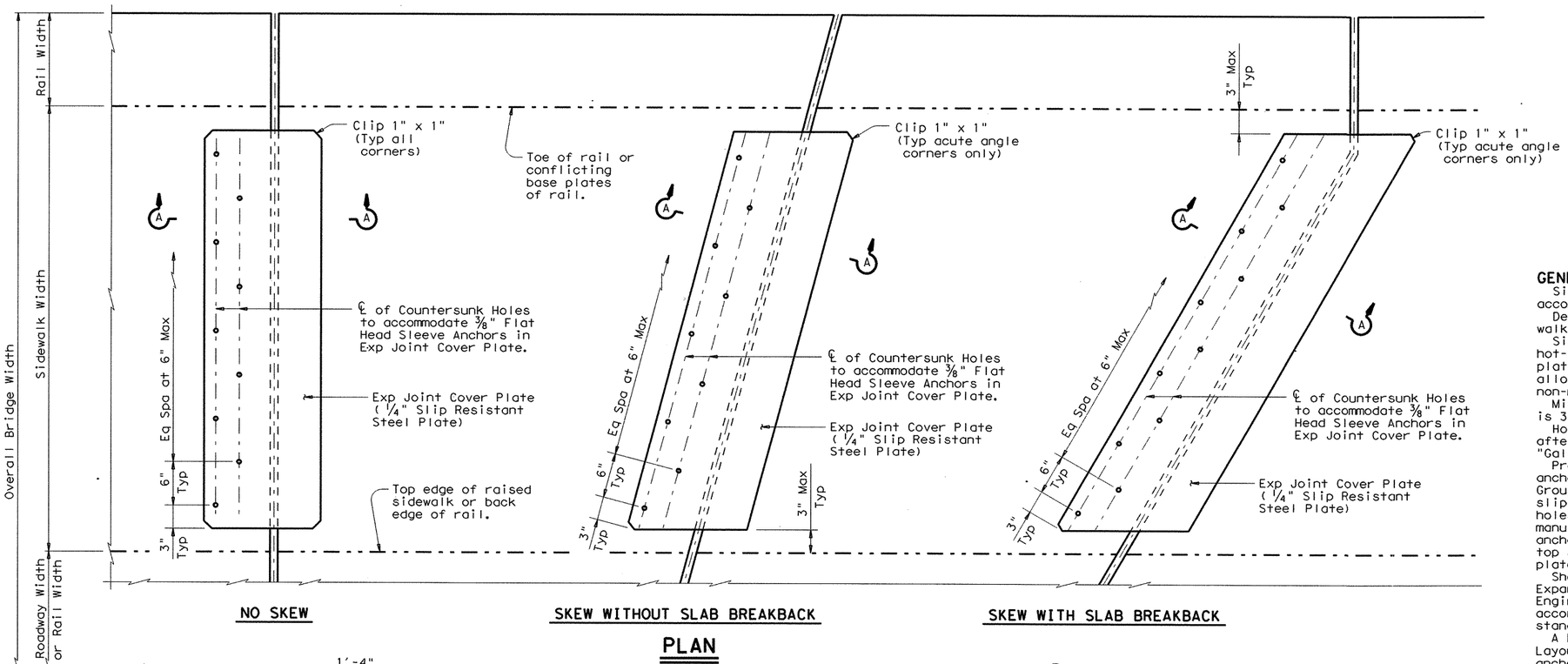

NO SKEW

SKEW WITHOUT SLAB BREAKBACK

SKEW WITH SLAB BREAKBACK

PLAN

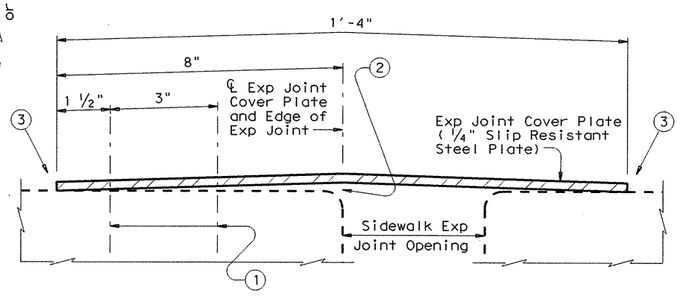

SHOWING LEVEL EXP JOINT

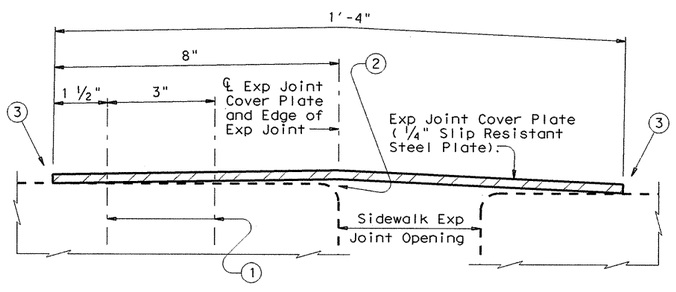

SHOWING UNLEVEL EXP JOINT

(Install Sleeve Anchors on high side of Exp Joint)

SECTION A-A

1. ℄ ⅜" x 2 ½" Min, Flat Head Sleeve Anchors, Stainless Steel. Countersink Flat Head Sleeve Anchors in ¼" Slip Resistant Steel Plate.
2. It is not necessary to remove plate crown provided the plate is firmly secured to the sidewalk.
3. Transverse edges must be in contact with sidewalk surface after installation.

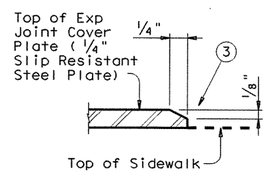

EXP JOINT COVER PLATE BEVEL DETAIL

Bevel all plate edges as shown.

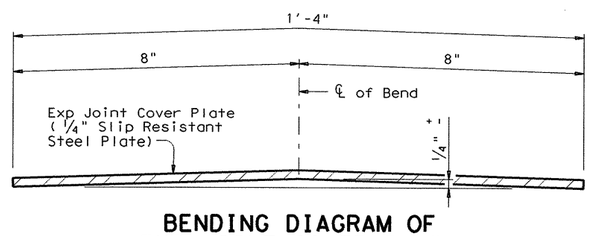

BENDING DIAGRAM OF EXP JOINT COVER PLATE

APPROVED SLIP RESISTANT PLATE	
Product	Manufacturer Website
Mebac® #2, Steel	www.ikgindustries.com
Algrip™, Steel	www.algrip.com
SlipNOT® Grade 2, Steel	www.slipnot.com

GENERAL NOTES:

Sidewalk expansion joint cover plates can only accommodate up to a 7" maximum expansion joint.

Details provided are applicable to concrete walkway surfaces only.

Sidewalk expansion joint cover plates must be hot-dipped galvanized ¼" slip resistant steel plate. Checker plate or diamond plate is not allowed nor are slip resistant tapes, films and non-metallic coatings.

Minimum required yield strength of steel plate is 36 ksi.

Hot-dip galvanize slip resistant steel plate after fabrication in accordance with Item 445, "Galvanizing".

Provide stainless steel flat head sleeve anchors meeting the requirements of ASTM F 593, Group I, Alloy 304. Countersink holes in slip-resistant plate for sleeve anchors. Drill holes in sidewalk as per sleeve anchor manufacturer's recommendations. Install sleeve anchors flush with, or slightly recessed below, top surface of sidewalk expansion joint cover plate.

Shop drawings for the fabrication of Sidewalk Expansion Joint Cover Plate will not require the Engineer's approval if fabrication is in accordance with the details shown on this standard.

A Bridge Sidewalk Expansion Joint Cover Plate Layout which identifies location side of sleeve anchors and orientation of all cover plate sections will be developed by the fabricator. Mark each steel section in accordance with the Bridge Sidewalk Expansion Joint Cover Plate Layout. A copy of the Bridge Sidewalk Expansion Joint Cover Plate Layout is to be provided to the Engineer.

Payment for sidewalk expansion joint cover plates will be by the pound of "Structural Steel (Misc)" as per Item 442, "Metal for Structures".

Estimated weight of one sidewalk expansion joint cover plate is 14 plf.

DISCLAIMER:
The use of this standard is governed by the "Texas Engineering Practice Act". No warranty of any kind is made by TxDOT for any purpose whatsoever. TxDOT assumes no responsibility for the conversion of this standard to other formats or for incorrect results or damages resulting from its use.

LEVELS DISPLAYED
ACC:

Texas Department of Transportation
Bridge Division

BRIDGE SIDEWALK EXPANSION JOINT COVER PLATE (ALL SKEWS)

BS-EJCP

FILE: bsejstel.dgn	DN: TxDOT	CK: TxDOT	DW: TxDOT	CK: TxDOT
© TxDOT April 2006	DISTRICT	FEDERAL AID PROJECT		SHEET
REVISIONS	AUSTIN			509
	COUNTY		CONTROL-SECT-JOB	HIGHWAY
	WILLIAMSON		0683-06-027	VAR 45 LOOP 1

DISCLAIMER:
The use of this standard is governed by the "Texas Engineering Practice Act". No warranty of any kind is made by TxDOT for any purpose whatsoever. TxDOT assumes no responsibility for the conversion of this standard to other formats or for incorrect results or damages resulting from its use.

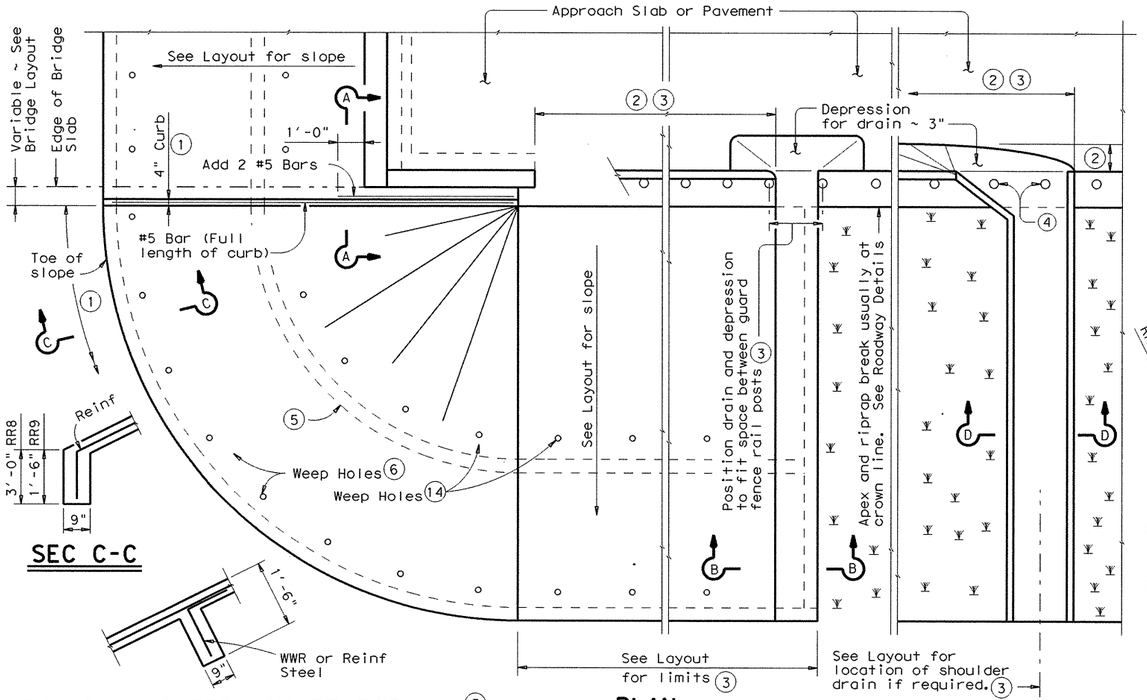

PLAN

SEC C-C

OPTIONAL INTERMEDIATE TOEWALL

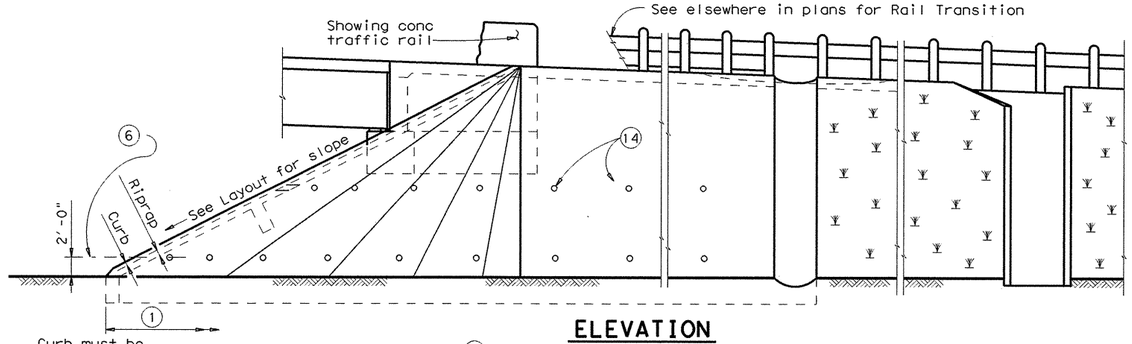

ELEVATION

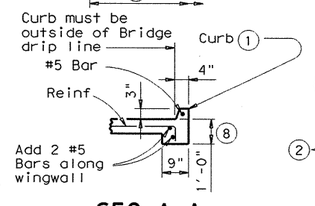

SEC A-A

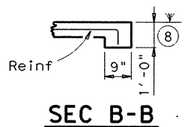

SEC B-B

(No Drain)

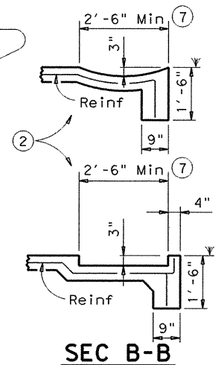

SEC B-B

(Shoulder Drain integral with riprap)

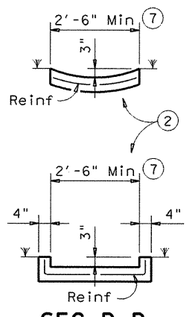

SEC D-D

(Shoulder Drain)

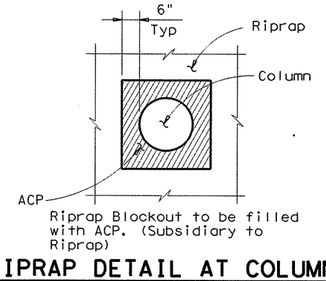

RIPRAP DETAIL AT COLUMNS

(As directed by the Engineer)

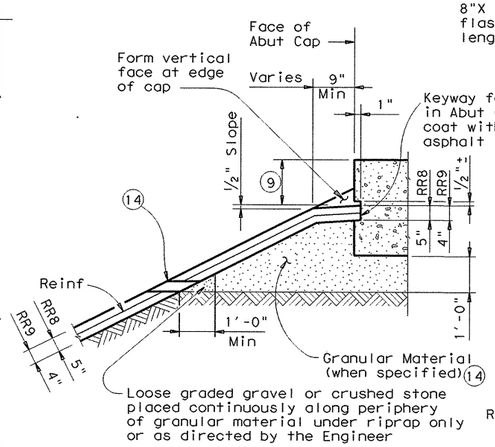

SHOWING KEYWAY OPTION

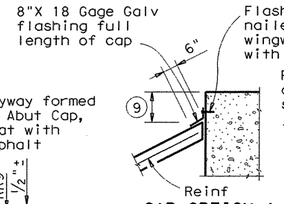

CAP OPTION A

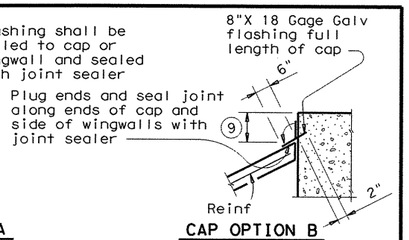

CAP OPTION B

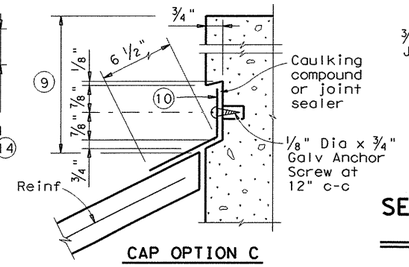

CAP OPTION C

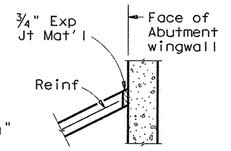

SECT THRU RIPRAP AT WINGWALL (12)

SECTIONS THRU RIPRAP AT CAP (11)

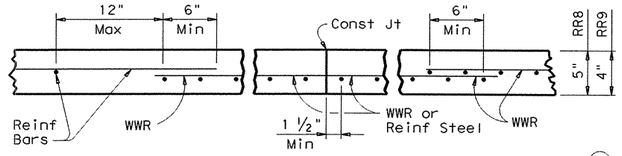

DETAILS OF WWR, REINF AND CONST JOINT (13)

1. When riprap is shown extended around header on layout, extend slab and toewall as shown and eliminate 4" curb.
2. Limits and configuration of drains and depressions shall be as shown elsewhere in plans or as directed by the Engineer.
3. Location of shoulder drain must consider limitations imposed by rail transition. Do not locate shoulder drains at expansion joints between approach slab and concrete pavement.
4. See details elsewhere in plans for installation of guard fence posts through concrete riprap.
5. The optional intermediate toewall shall be constructed when designated elsewhere in the plans or included in the specifications.
6. Provide lower level of 2" Dia weep holes at 10' c-c backed by 1 CF packet of gravel and galvanized hardware cloth at all locations unless directed by the Engineer to eliminate.
7. Wider or other drain configurations shall be used if shown elsewhere in plans or if directed by the Engineer.
8. Wall extension may be reduced or modified if approved by the Engineer. Wall extension shall be increased to 1'-6" whenever the optional intermediate toewall is called for in the plans.
9. Top of cap to top of riprap dimension varies as directed by the Engineer. Should be 9" Min for beam/slab type bridges and 1'-6" for slab span, box beam, or slab beam bridges.
10. 8" x 18 Gage Galv Sheet Metal
11. The sealing option of the joint between the face of cap and riprap shall be as designated by the Engineer or as shown elsewhere on plans.
12. Flashing (shown in Cap Option A) may be used at wingwall in addition to Exp Jt Mat'l if shown on plans or directed by the Engineer.
13. Reinforcing bars shall be #3 at 18" Spa c-c. Welded Wire Reinforcement (WWR) shall be 6X6-W2.9XW2.9. Combinations of WWR and reinforcing bars may be used if both are permitted. Lap splices shall be a minimum of 6 inches, measured from the transverse wire of WWR, and the ends of reinforcing bars.
14. If granular material is specified, provide upper level of 2" Dia weep holes at 10' c-c backed by galvanized hardware cloth.

FOR CONTRACTOR'S INFORMATION ONLY:
5" of RR8 = 0.015 CY/SF
4" of RR9 = 0.012 CY/SF
#3 Reinf at 18" c-c = 0.501 Lbs/SF
6X6-W2.9XW2.9 = 0.394 Lbs/SF

GENERAL NOTES:

Concrete shall be Class "B" with a minimum compressive strength of 2,000 psi unless noted elsewhere in plans.

All reinforcing steel shall be Grade 60.

Reinforcing other than that shown may be used by substituting reinforcement of equal or greater unit cross-sectional area. The maximum reinforcement spacing shall be 18 inches.

Construction joints or grooved joints extending the full slant slope height shall be at intervals of approximately 20 feet unless otherwise directed by the Engineer.

Hardware cloth, loose graded stone behind weep holes, flashing, or other sealing material shall not be paid for directly but shall be subsidiary to the bid item "Riprap".

Unless specified elsewhere in the plans to be only reinforcing bars, the riprap reinforcing may be composed of reinforcing bars, Welded Wire Reinforcement (WWR), or any suitable combination of both types.

See Layout for limits of riprap.

RR8 is to be used on stream crossings.

RR9 is to be used on other embankments.

Texas Department of Transportation
Bridge Division

CONCRETE RIPRAP AND SHOULDER DRAINS
EMBANKMENTS AT BRIDGE ENDS (TYPES RR8 & RR9)

CRR

FILE: crrstde1.dgn	DN: TxDOT	CK: TxDOT	DW: TxDOT	CK: TxDOT
©TxDOT April 2006	DISTRICT	FEDERAL AID PROJECT		SHEET
REVISIONS 08-2007: Revised Note 6, removed "H" reference, added Note 14 & changed weep hole size & spacing.	AUSTIN			510
	COUNTY		CONTROL-SECT-JOB	HIGHWAY
	WILLIAMSON		0683-06-027	SH 45 LOOP 1

PATH:
LEVELS DISPLAYED
1

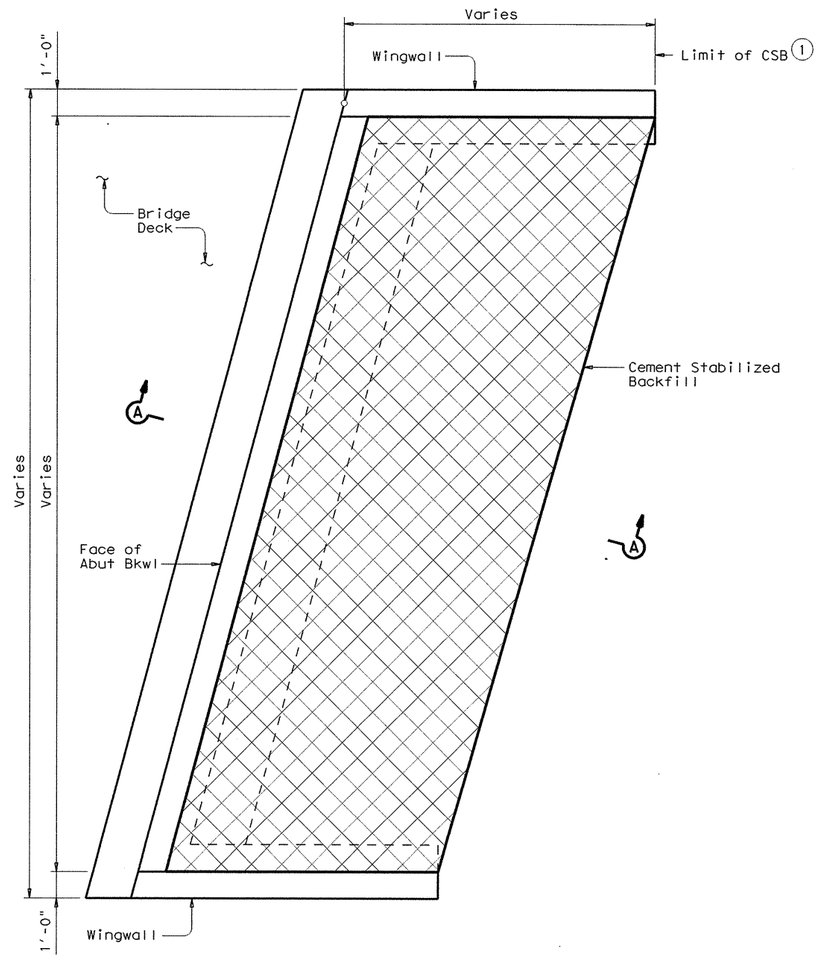

PLAN

Showing Skew

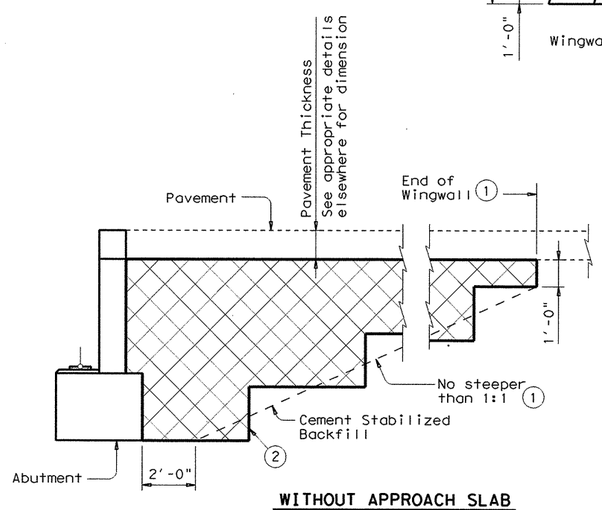

WITHOUT APPROACH SLAB

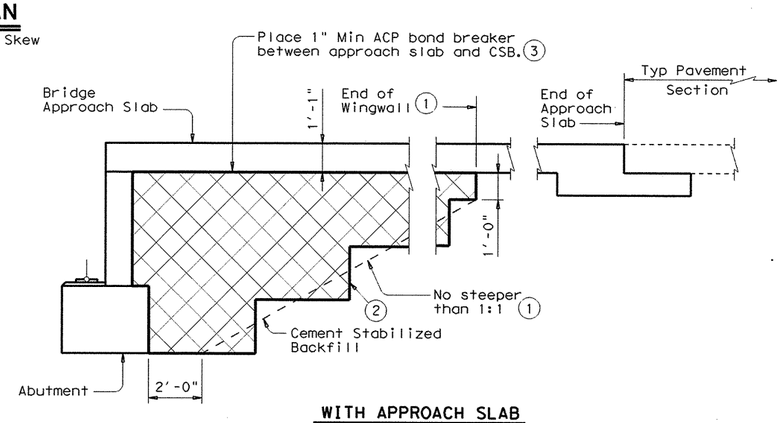

WITH APPROACH SLAB

SECTION A-A

(1) Usual limit of Cement Stabilized Backfill is at end of wingwall. However, extend limits as required to maintain a slope no steeper than 1:1 at bottom of backfill.

(2) Bench backfill as shown with 12" (approximate) bench depths.

(3) Other materials can be used as a bond breaker if permitted by the Engineer. 2 layers of 30 Lb roofing felt or 2 layers of heavy mil polyethylene sheeting are examples.

GENERAL NOTES:

Provide Cement Stabilized Backfill meeting the requirements of Item 400, "Excavation and Backfill for Structures", to the limits shown at bridge abutments.

Details are drawn showing left forward skew. See Bridge Layout for actual skew direction.

These details do not apply when MSE or Concrete Block retaining walls are used in lieu of wingwalls.

DISCLAIMER:
"The use of this standard is governed by the "Texas Engineering Practice Act". No warranty of any kind is made by TxDOT for any purpose whatsoever. TxDOT assumes no responsibility for the conversion of this standard to other formats or for incorrect results or damages resulting from its use.

PATH:

LEVELS DISPLAYED

Texas Department of Transportation
Bridge Division

CEMENT STABILIZED ABUTMENT BACKFILL
BRIDGE ABUTMENT

CSAB

FILE: csabstel.dgn	DN: TxDOT	CK: TxDOT	DW: TxDOT	CK: TxDOT
© TxDOT April 2006	DISTRICT	FEDERAL AID PROJECT		SHEET
REVISIONS 08-2007: Added Note 3.	AUSTIN			511
	COUNTY		CONTROL SECT JOB	HIGHWAY
	WILLIAMSON		0683-06-027	SH 45 LOOP 1

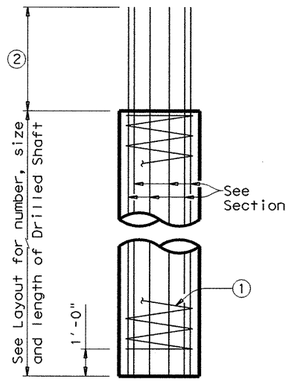

ABUTMENTS, WINGWALLS AND MULTI-DRILLED SHAFT FOOTINGS

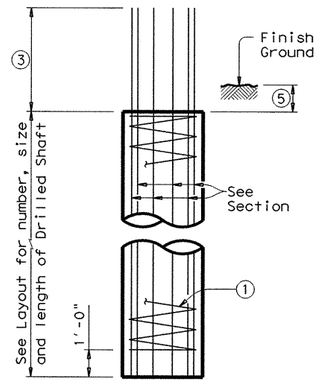

INTERIOR BENTS DRILLED SHAFT DIA EQUAL TO COLUMN DIA

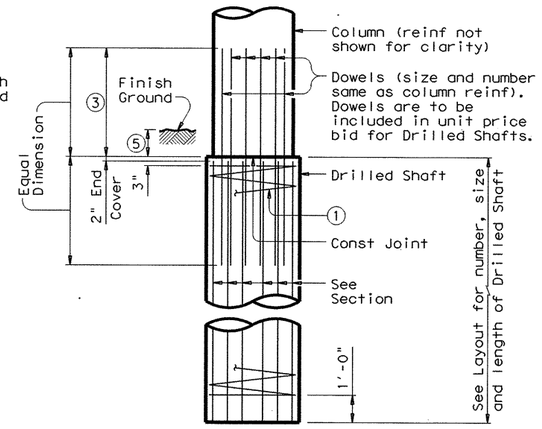

INTERIOR BENTS DRILLED SHAFT DIA GREATER THAN COLUMN DIA

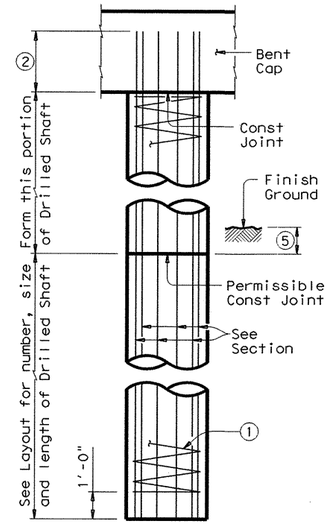

OPTIONAL INTERIOR BENT DRILLED SHAFT DETAIL④

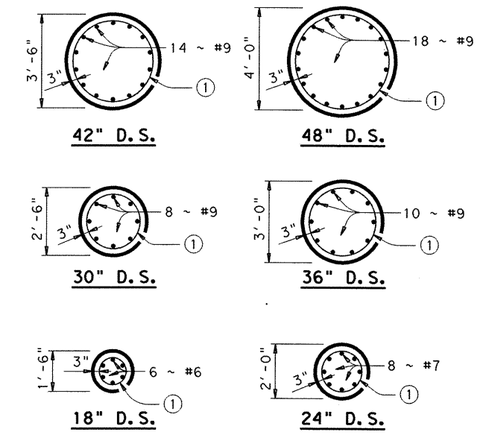

DRILLED SHAFT SECTIONS

DRILLED SHAFT DETAILS

① #3 Spiral at 6" pitch (One flat turn top & bottom)

② Min extension into supported element:
#6 Bars = 1'-0"
#7 Bars = 1'-5"
#9 Bars = 2'-3"

③ Min lap with Column reinf:
#7 Bars = 2'-4"
#9 Bars = 3'-10"

④ If approved by the Engineer, Drilled Shafts may extend to bottom of bent caps for "H" heights of 6 ft or less (as shown on Bridge Layout). This option can only be used when Drilled Shaft Dia equals Column Dia. The forming method shall be submitted for approval prior to construction. No adjustments in payment will be made if this option is used.

⑤ 6" Min at Grade Crossing, 1'-0" Min in Channel.

⑥ Or as shown on plans.

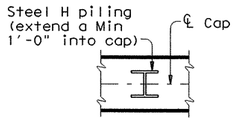

ORIENTATION OF STEEL H PILING

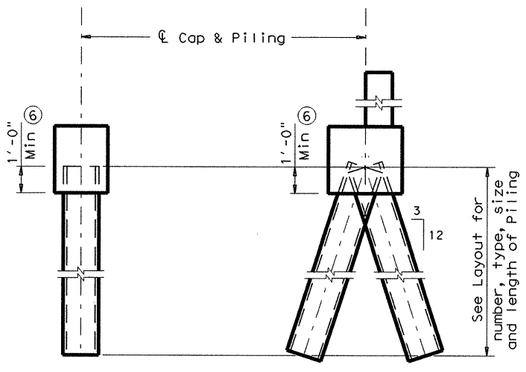

VERTICAL PILE BATTERED PILE

PILING DETAILS
(Concrete or Steel H)

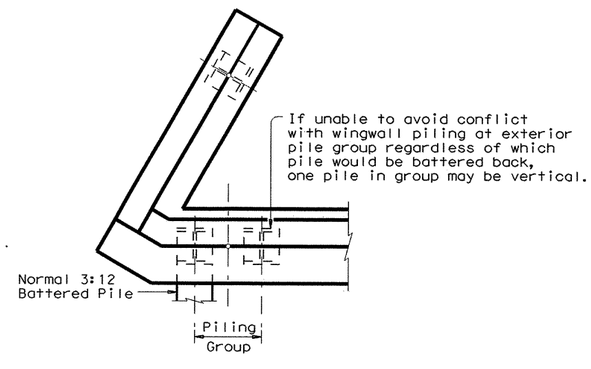

DETAIL "A"
(Showing Plan View of a 30° Skewed Abutment)

SHEET 1 OF 2

Texas Department of Transportation
Bridge Division

COMMON FOUNDATION DETAILS

FD

FILE: fdstde01.dgn	DN: TxDOT	CK: TxDOT	DW: TxDOT	CK: TxDOT
© TxDOT April 2006	DISTRICT	FEDERAL AID PROJECT		SHEET
REVISIONS	AUSTIN			512
	COUNTY		CONTROL-SECT-JOB	HIGHWAY
	WILLIAMSON		0683-06-027	SH 45 LOOP 1

DISCLAIMER:
The use of this standard is governed by the "Texas Engineering Practice Act". No warranty of any kind is made by TxDOT for any purpose whatsoever. TxDOT assumes no responsibility for the conversion of this standard to other formats or for incorrect results or damages resulting from its use.

ACC:
LEVELS DISPLAYED

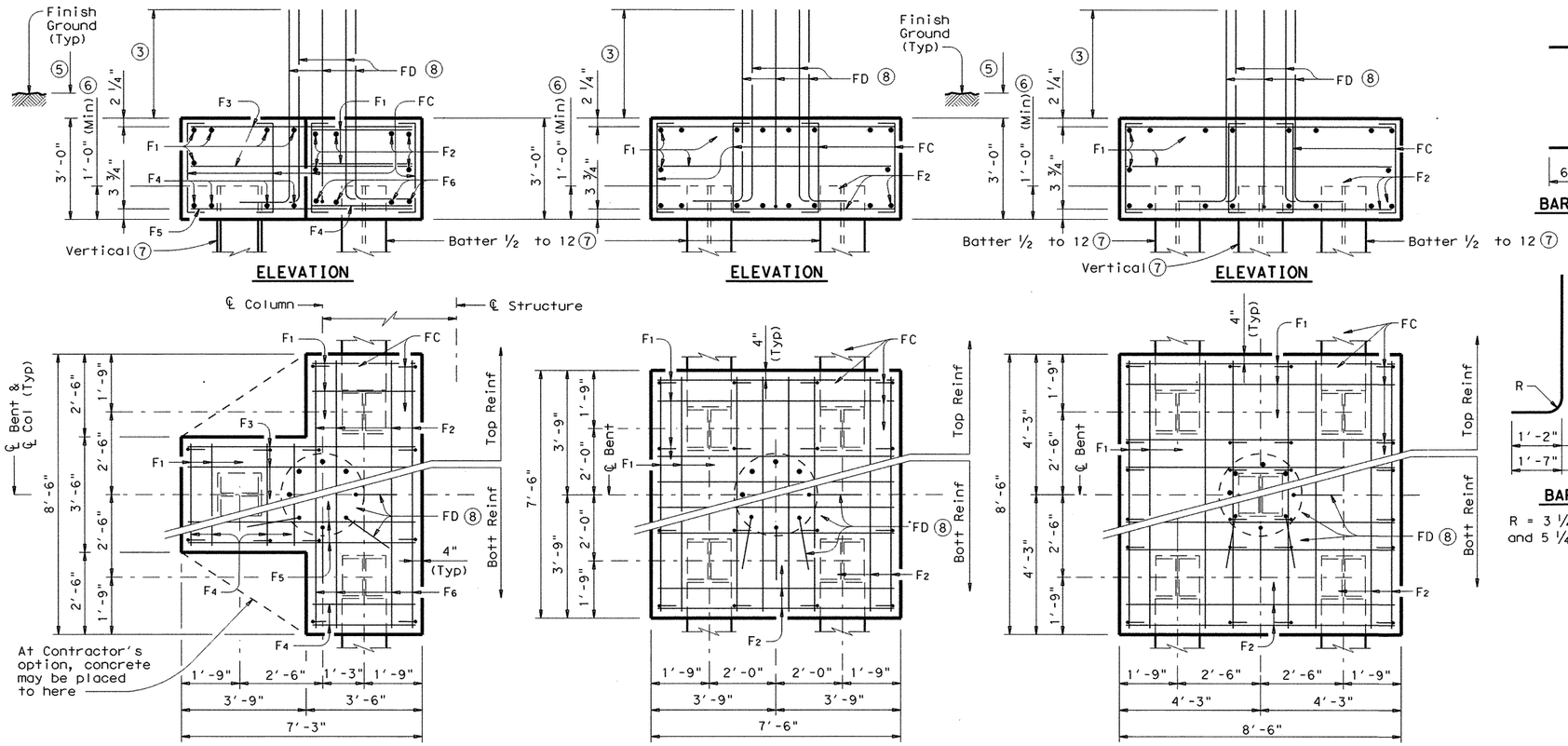

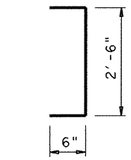

BARS FC

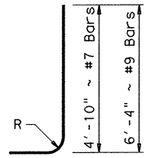

1'-2"	#7 Bars
1'-7"	#9 Bars

BARS FD ⑧

R = 3 ¼" ~ #7 Bars and 5 ¼" ~ #9 Bars

TABLE OF FOOTING QUANTITIES FOR 30" COLUMNS

ONE 3 PILE FOOTING				
Bar	No.	Size	Length	Weight
F_1	11	#4	3'- 2"	23
F_2	6	#4	8'- 2"	33
F_3	6	#4	6'- 11"	28
F_4	8	#9	3'- 2"	86
F_5	4	#9	6'- 11"	94
F_6	4	#9	8'- 2"	111
FC	12	#4	3'- 6"	28
FD ⑨	8	#9	7'- 11"	215
Reinforcing Steel			Lb	618
Class "C" Concrete			CY	4.8

ONE 4 PILE FOOTING				
Bar	No.	Size	Length	Weight
F_1	20	#4	7'- 2"	96
F_2	16	#8	7'- 2"	306
FC	16	#4	3'- 6"	37
FD ⑨	8	#9	7'- 11"	215
Reinforcing Steel			Lb	654
Class "C" Concrete			CY	6.3

ONE 5 PILE FOOTING				
Bar	No.	Size	Length	Weight
F_1	20	#4	8'- 2"	109
F_2	16	#9	8'- 2"	444
FC	24	#4	3'- 6"	56
FD ⑨	8	#9	7'- 11"	215
Reinforcing Steel			Lb	824
Class "C" Concrete			CY	8.0

③ Min lap with Column reinf:
#7 Bars = 2'-4"
#9 Bars = 3'-10"

⑤ 6" Min at Grade Crossing, 1'-0" Min in Channel.

⑥ Or as shown on plans.

⑦ See Layout for Type, Size and length of Piling.

⑧ Number and size of FD bars must match Column reinforcing. FD bars shall be tied to the top of the bottom mat of reinforcing

⑨ For 24" Columns, use #7 FD bars (6'-0") in place of #9 bars and deduct 116 lbs. For 36" Columns, add 2 FD bars (54 lbs).

GENERAL NOTES:

Designed according to AASHTO LRFD Specifications.

See Bridge Layout of each Structure for Foundation Type to be used.

Drilled shaft details shown are not to be used for retaining wall, noise wall, barrier or sign foundation without structural evaluation.

Footings shown on this standard are not applicable for columns larger than 36" Diameter.

Details shown on this standard to be used unless shown otherwise in the plans.

Maximum Pile Load for the footings shown shall be as follows : 72 Tons/Pile with 24" Dia Column
80 Tons/Pile with 30" Dia Column
100 Tons/Pile with 36" Dia Column

The footings shown on this Standard are not to be used in direct contact with salt water or exposed to salt water spray.

Drilled Shaft reinforcing may be Grade 40.

Piling under abutment wings to be driven to a minimum resistance of 10 Tons.

DISCLAIMER:
The use of this standard is governed by the "Texas Engineering Practice Act". No warranty of any kind is made by TxDOT for any purpose whatsoever. TxDOT assumes no responsibility for the conversion of this standard to other formats or for incorrect results or damages resulting from its use.

LEVELS DISPLAYED | ACC:

SHEET 2 OF 2

Texas Department of Transportation
Bridge Division

COMMON FOUNDATION DETAILS

FD

FILE: fdstde01.dgn	DN: TxDOT	CK: TxDOT	DW: TxDOT	CK: TxDOT		
©TxDOT April 2006	DISTRICT	FEDERAL AID PROJECT			SHEET	
REVISIONS	AUSTIN				513	
	COUNTY		CONTROL-SECT-JOB		HIGHWAY	
	WILLIAMSON		0683-06-027		SH 45 LOOP 1	

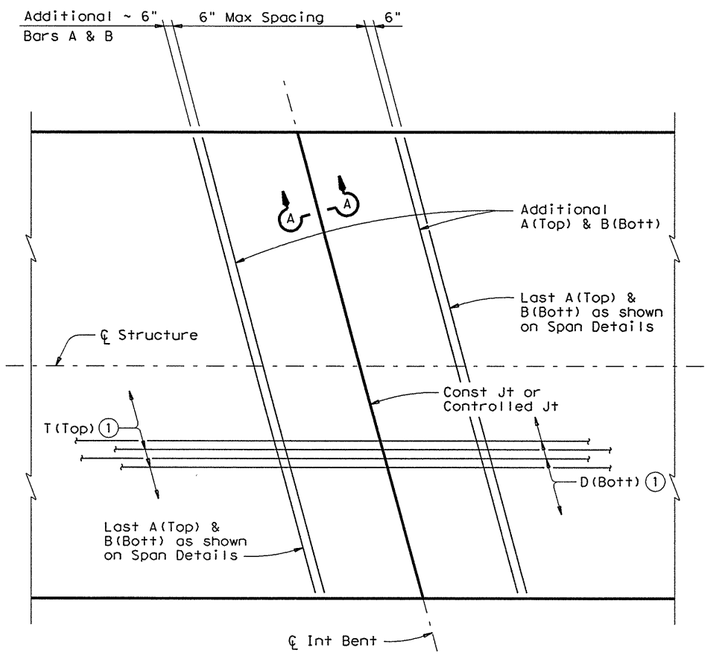

PLAN FOR 0° OR 15° SKEW

(Showing 15° skew)

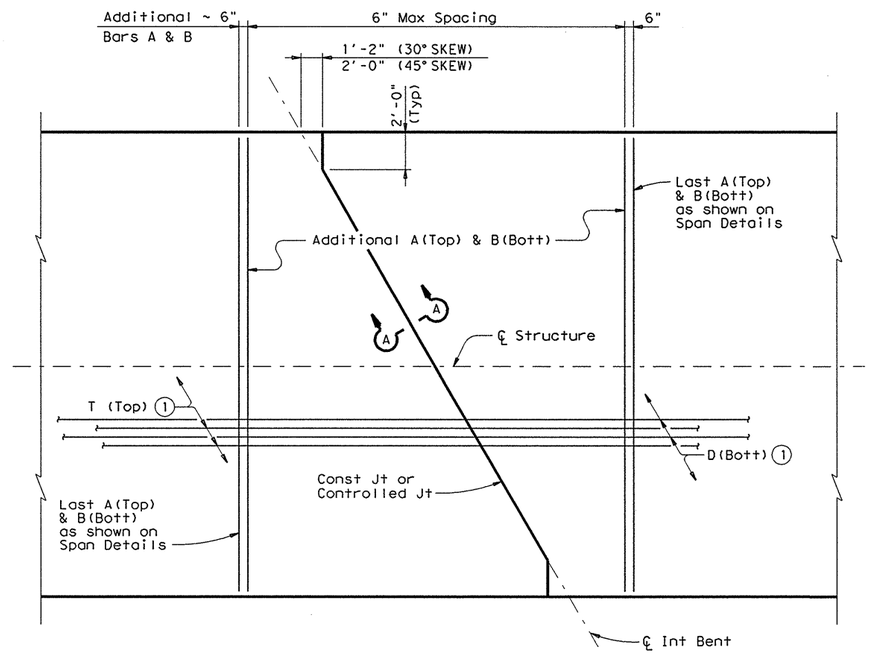

PLAN FOR 30° OR 45° SKEW

(Showing 30° skew)

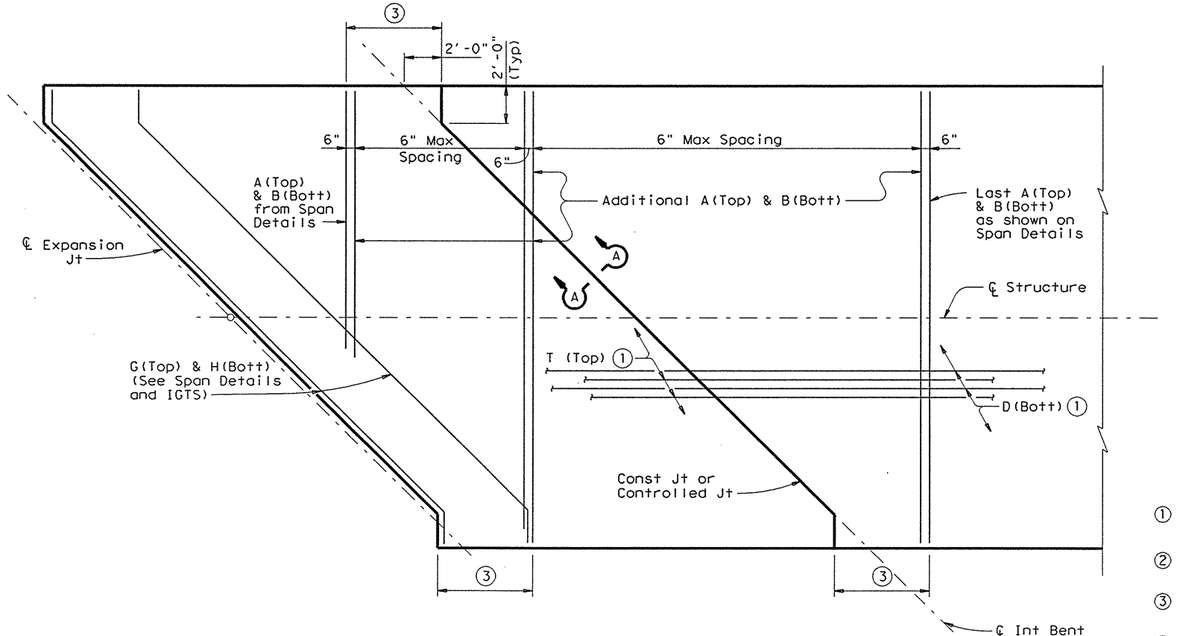

PLAN FOR 45° SKEW 4

(Showing short Span condition)

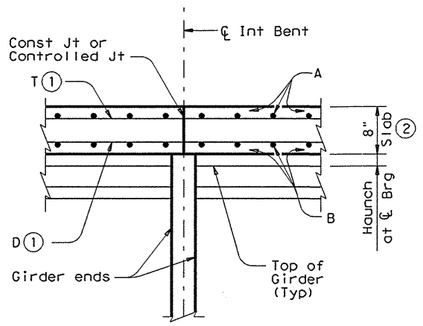

SECTION A-A

1. Top and bottom mats must be continuous through joint.
2. Maintain a constant 8" thick slab over the bent.
3. 5'-4" as shown on Span Details.
4. Use these details when no full slab width bars A and B are shown on Span Details.

TABLE OF ALLOWABLE UNIT LENGTH

Max Rdwy Grade, Percent	Unit Length Factor
0.00	4.1
1.00	3.9
2.00	3.7
3.00	3.5
4.00	3.3
5.00	3.1

Unit length must not exceed the length of the shortest end span times the Unit Length Factor shown in table or 400', whichever is less.

BAR TABLE

BAR	SIZE
A	#5
B	#5
D	#5
T	#4

The details shown on this sheet are applicable for two and three span units comprised of the same girder type.
Units may be comprised of different span lengths. See "Table of Allowable Unit Length".

GENERAL NOTES:

Designed according to AASHTO LRFD Specifications.

This standard is drawn showing right forward skew. See Bridge Layout for actual skew direction.

Where multi-span units are indicated on the Bridge Layout, the Thickened Slab End details and reinforcement shown on Standard IGTS (Bars AA, G, H, J, K, and M) and on the Span Details will be omitted where slabs are continuous over interior bents. At these locations, the slab details and reinforcement will be as shown on this sheet or on Standard PCP (if using this option).

Thickened Slab End reinforcement and details still apply at expansion joint locations (ends of units).

See Span Details for remainder of slab reinforcement and details.

All reinforcing must be Grade 60.

Concrete strength f'c = 4,000 psi.

Bar laps, where required, will be as follows:

Uncoated ~ #4 = 1'-5"
~ #5 = 1'-9"

Epoxy Coated ~ #4 = 2'-1"
~ #5 = 2'-7"

The details shown on this sheet are applicable for use only with the Prestressed Concrete I-Girder Standard Designs shown on standards IGSD-24, IGSD-28, IGSD-30, IGSD-32, IGSD-38, IGSD-40 and IGSD-44.

HL93 LOADING

Texas Department of Transportation
Bridge Division

CONTINUOUS SLAB DETAILS
PRESTR CONC I-GIRDER SPANS

IGCS

FILE: igcslste.dgn	DN: JMH	CK: TxDOT	DW: JTR	CK: TxDOT
©TxDOT June 2007	DISTRICT	FEDERAL AID PROJECT		SHEET
REVISIONS 01/10: Added IGSD-32 and IGSD-40. 12/10: Unit Length.	AUSTIN			514
	COUNTY	CONTROL	SECT	JOB	HIGHWAY
	WILLIAMSON	0683	06	027	SH 45 LOOP 1

DISCLAIMER:
The use of this standard is governed by the "Texas Engineering Practice Act". No warranty of any kind is made by TxDOT for any purpose whatsoever. TxDOT assumes no responsibility for the conversion of this standard to other formats or for incorrect results or damages resulting from its use.

LEVELS DISPLAYED
ACC:

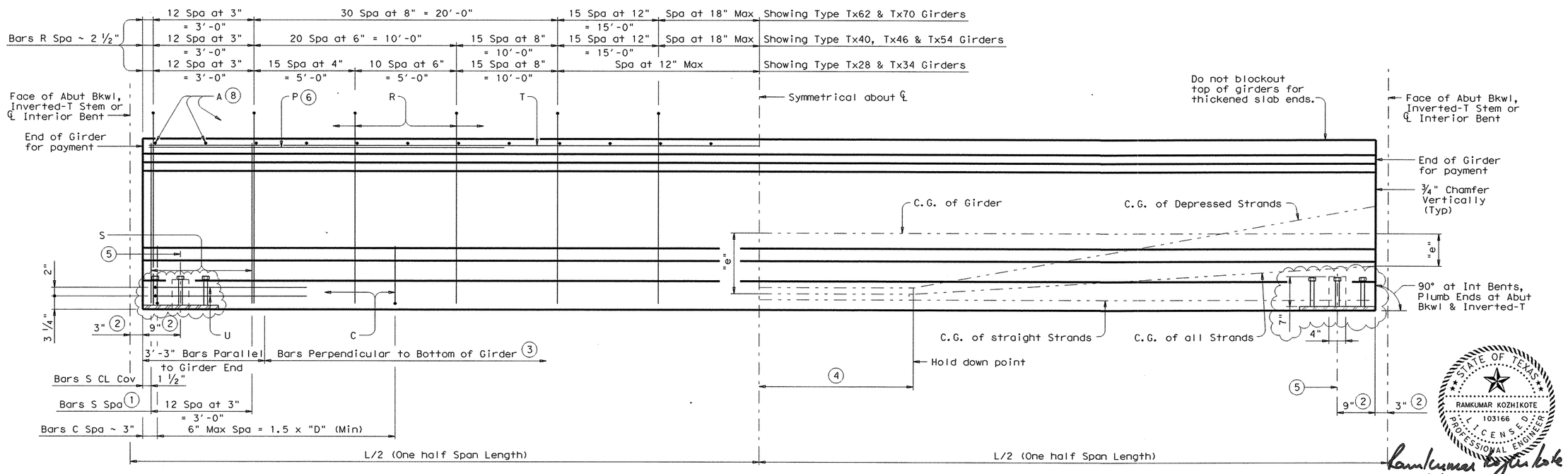

STATE OF TEXAS
RAMKUMAR KOZHIKOTE
103166
LICENSED PROFESSIONAL ENGINEER

Ramkumar Kozhikote 4/11/2011

GIRDER ELEVATION

(1) Bundle with Bars R.

(2) Measured along ℄ Girder at Interior Bents; perpendicular to Abutment Bkwl or Inverted-T Stem.

(3) The average of the top and bottom spacing of Bars R cannot exceed the required spacing.

(4) L/20, but not less than 5'-0" (-0,+2').

(5) ℄ 4" x 1 1/2" Vertical Slotted Hole at doweled girder end [labeled (D) on Bridge Layout]. Required for outside girder only or as shown on substructure details. Anchorage holes may be tapered (4 3/4" x 1 5/8") at base. If holes are formed with sheet metal, forms may be left in place.

(6) Bars P (#6 x 15'-0") are only required when "e" at girder ends exceeds 0.25 x "D". At the fabricator's option bars larger than #6 may be used. When L is less than 50 ft, Bars P are to be the same length as Bars T.

(7) 1 3/8" Clear Cover to Bars S.

(8) Space Bars A at 6" Max for girders requiring overhang bracket hangers. Space at 12" Max for all other girders. Tie to Bars R as necessary. See standard IGMS for "Deck Forming Notes".

GIRDER DIMENSIONS AND SECTION PROPERTIES

Girder Type	"D" (in.)	"B" (in.)	"Yt" (in.)	"Yb" (in.)	Area (in.²)	"Ix" (in.⁴)	"Iy" (in.⁴)	Weight (plf)
Tx28	28	6	15.02	12.98	585	52,772	40,559	610
Tx34	34	12	18.49	15.51	627	88,355	40,731	653
Tx40	40	18	21.90	18.10	669	134,990	40,902	697
Tx46	46	22	25.90	20.10	761	198,089	46,478	793
Tx54	54	30	30.49	23.51	817	299,740	46,707	851
Tx62	62	37 1/2"	33.72	28.28	910	463,072	57,351	948
Tx70	70	45 1/2"	38.09	31.91	966	628,747	57,579	1,006

GENERAL NOTES:

Designed in accordance with AASHTO LRFD Specifications.
All concrete must be Class H. Provide Class H(HPC) if shown elsewhere in plans.
All reinforcing bars must be Grade 60.
An equal area of deformed Welded Wire Reinforcement (WWR) (ASTM A497) may be substituted for Bars A, C, R or T unless otherwise noted.
It is permissible for bars or strands to come in contact with materials used in forming anchor holes.

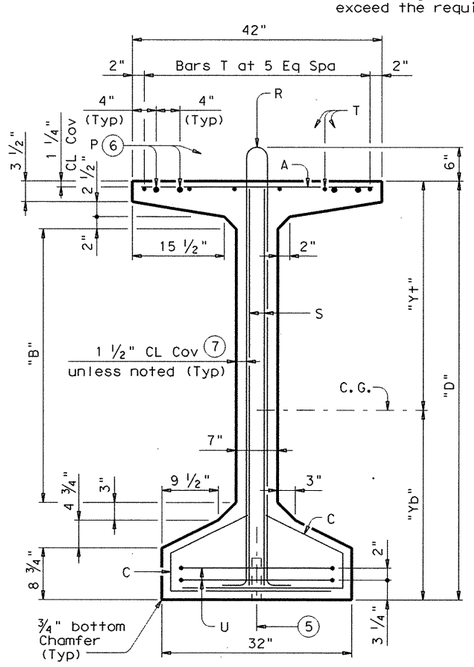

TYPE Tx62 & Tx70

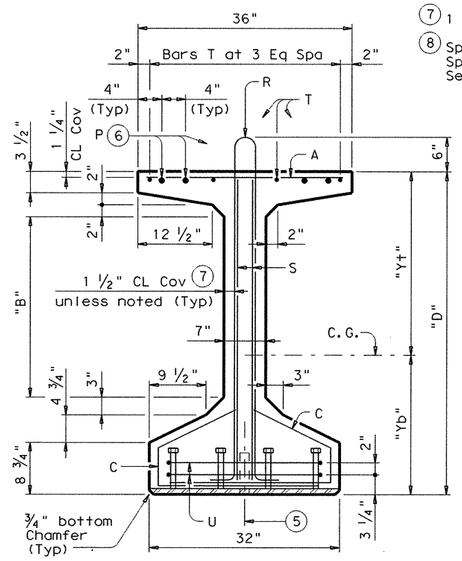

TYPE Tx46 & Tx54

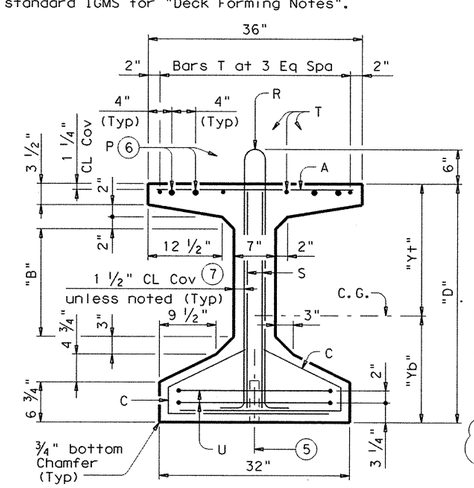

TYPE Tx28, Tx34 & Tx40

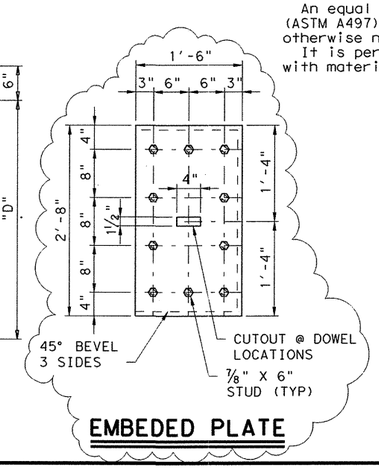

EMBEDED PLATE

HL93 LOADING

SHEET 1 OF 2

Texas Department of Transportation
Bridge Division

PRESTRESSED CONCRETE I-GIRDER DETAILS

IGD (MOD)

FILE: igdstdel.dgn	DN: TxDOT	CK: JMH	DW: JTR	CK: JMH
© TxDOT June 2007	DISTRICT	FEDERAL AID PROJECT		SHEET
REVISIONS 02/09 General Notes	AUSTIN			515
	COUNTY		CONTROL-SECT-JOB	HIGHWAY
	WILLIAMSON		0683-06-027	SH 45 LOOP 1

DISCLAIMER:
The use of this standard is governed by the "Texas Engineering Practice Act". No warranty of any kind is made by TxDOT for any purpose whatsoever. TxDOT assumes no responsibility for the conversion of this standard to other formats or for incorrect results or damages resulting from its use.

PATH:
LEVELS DISPL.

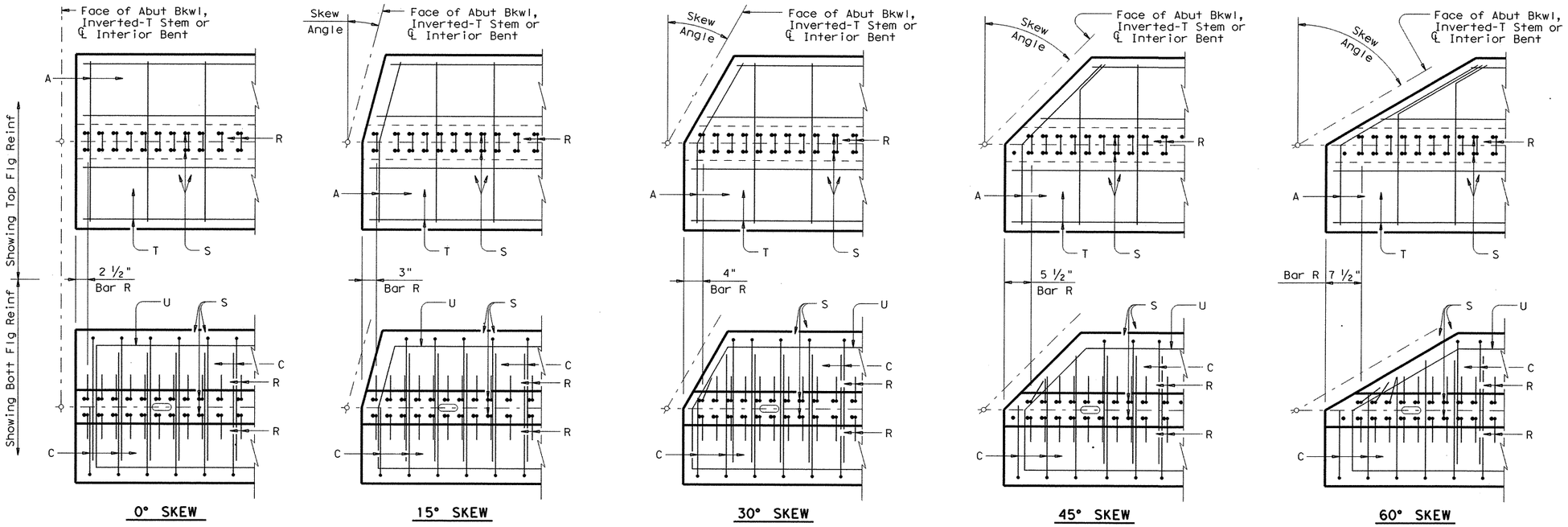

PLAN OF GIRDER ENDS (9)

(9) Reinforcing patterns shown are provided as guides to determine reinforcement placement in skewed ends. Place Bars S as close to girder end as cover requirements permit, which may prevent them to be bundled with Bars R.

(10) Bars may be cut or bent at skewed end as required.

(11) Increase as necessary for bars at skewed end.

(12) No portion of bar less than 10 ft.

(13) For Welded Wire Reinforcement (WWR) option, area of Bars R may be reduced in proportion to the increase in reinforcement yield strength over 60 ksi. Yield strength of WWR is limited to 75 ksi.

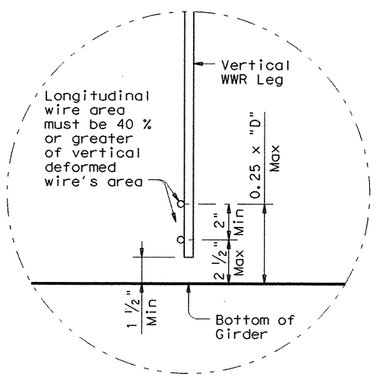

OPTIONAL WELDED WIRE REINFORCEMENT (WWR) DETAIL

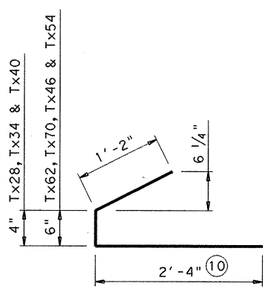

BARS C (#4)

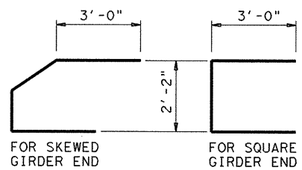

BARS U (#5)

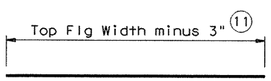

BARS A (#3)

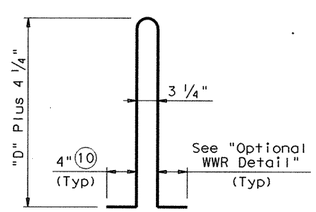

BARS R (#4) (13)

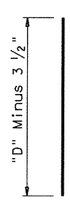

BARS S (#6)

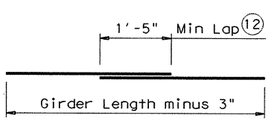

BARS T (#4)

HL93 LOADING

SHEET 2 OF 2

Texas Department of Transportation
Bridge Division

PRESTRESSED CONCRETE I-GIRDER DETAILS

IGD

FILE: igdstdel.dgn	DN: TxDOT	CK: JMH	DW: JTR	CK: JMH
© TxDOT June 2007	DISTRICT	FEDERAL AID PROJECT		SHEET
REVISIONS 02/09 General Notes	AUSTIN			516
	COUNTY		CONTROL-SECT-JOB	HIGHWAY
	WILLIAMSON		0683-06-027	SH 45 LOOP 1

DISCLAIMER:
The use of this standard is governed by the "Texas Engineering Practice Act". No warranty of any kind is made by TxDOT for any purpose whatsoever. TxDOT assumes no responsibility for the conversion of this standard to other formats or for incorrect results or damages resulting from its use.

PATH:

LEVELS DISPL.

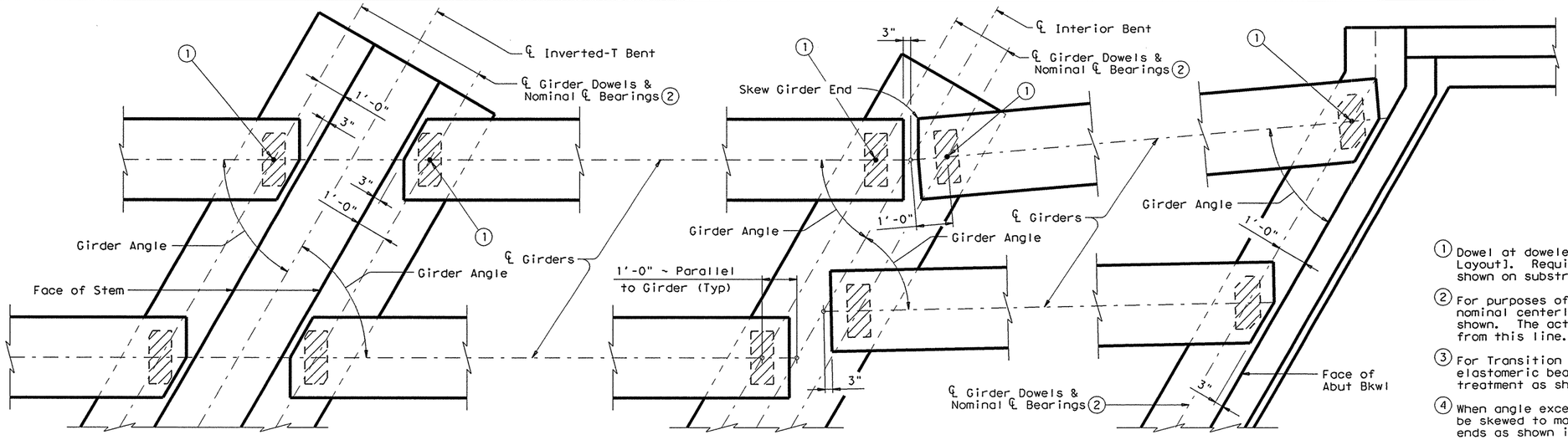

AT INVERTED-T BENT W/SKEW

AT CONVENTIONAL INTERIOR BENT W/SKEW

AT ABUTMENT (3)

(1) Dowel at doweled girder end [labeled (D) on Bridge Layout]. Required for outside girder only or as shown on substructure details.

(2) For purposes of computing Bearing Seat Elevations, nominal centerline of bearing must be defined as shown. The actual center of bearing pad may vary from this line.

(3) For Transition Bents with backwall, girder and elastomeric bearings must receive the same treatment as shown for Abutments.

(4) When angle exceeds 0°, one or both girders ends must be skewed to maintain the clearance between girder ends as shown in view.

(5) See Elastomeric Bearing Data Table for Bearing size. Girder end skew angles in Table not applicable for this situation. Table reflects girder conflicts of this type on radial bents only.

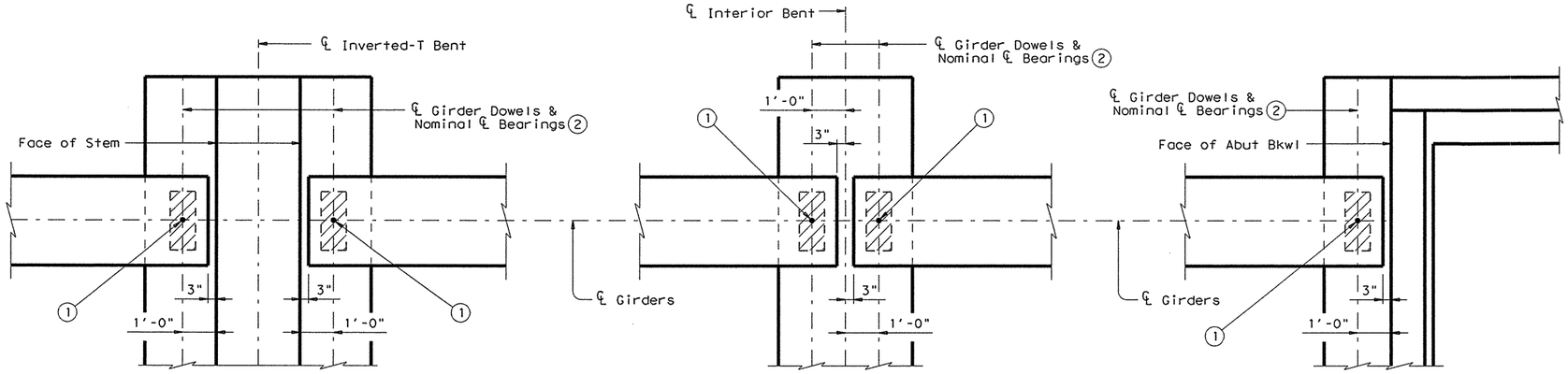

AT INVERTED-T BENT

AT CONVENTIONAL INTERIOR BENT

AT ABUTMENT (3)

GIRDER END DETAILS

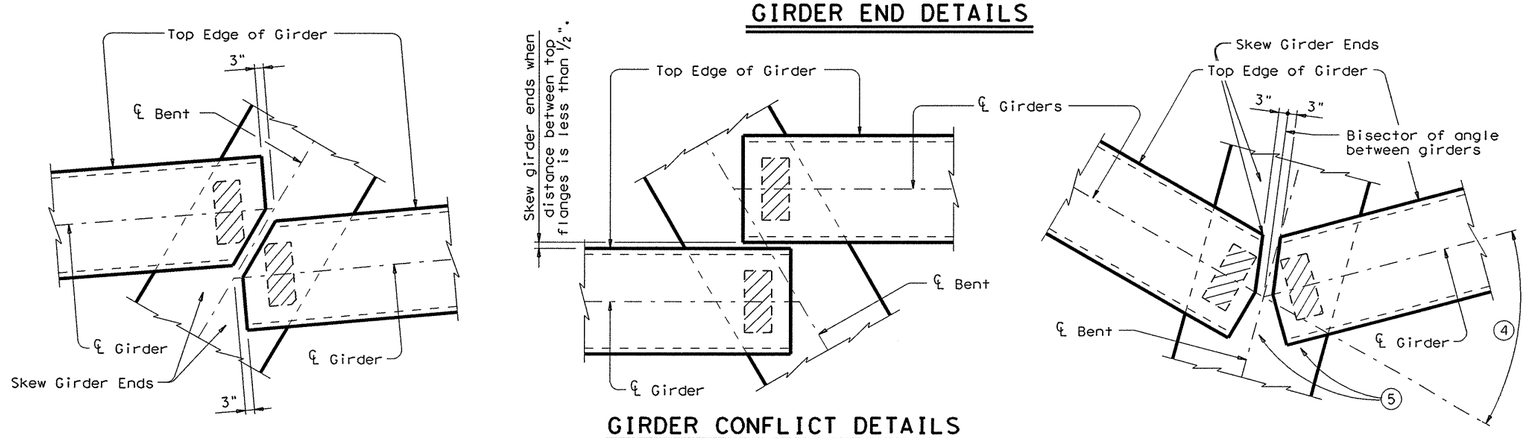

GIRDER CONFLICT DETAILS

GENERAL NOTES:

These details accommodate skew angles up to 60°.

Shop drawings for approval are required.

A bearing layout which identifies location and orientation of all bearings must be developed by the bearing fabricator. Permanently mark each bearing in accordance with the bearing layout. A copy of the bearing layout is to be provided to the Engineer.

Cost of furnishing and installing elastomeric bearings, including beveled and embedded steel plates, must be included in unit price bid for "Prestressed Concrete Girders".

DISCLAIMER:
The use of this standard is governed by the "Texas Engineering Practice Act". No warranty of any kind is made by TxDOT for any purpose whatsoever. TxDOT assumes no responsibility for the conversion of this standard to other formats or for incorrect results or damages resulting from its use.

PATH:

LEVELS DIS:

HL93 LOADING

SHEET 1 OF 3

Texas Department of Transportation
Bridge Division

ELASTOMERIC BEARING AND GIRDER END DETAILS
PRESTR CONCRETE I-GIRDERS

IGEB

FILE: igebstel.dgn	DN: AEE	CK: JMH	DW: JTR	CK: TxDOT	
© TxDOT June 2007	DISTRICT	FEDERAL AID PROJECT			SHEET
REVISIONS 12/10: Added Sole Plate Details.	AUSTIN				517
	COUNTY		CONTROL	SECT	JOB	HIGHWAY
	WILLIAMSON		0683	06	027	SH 45, LOOP 1

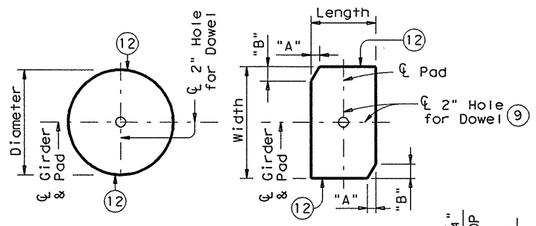

PLANS (10)

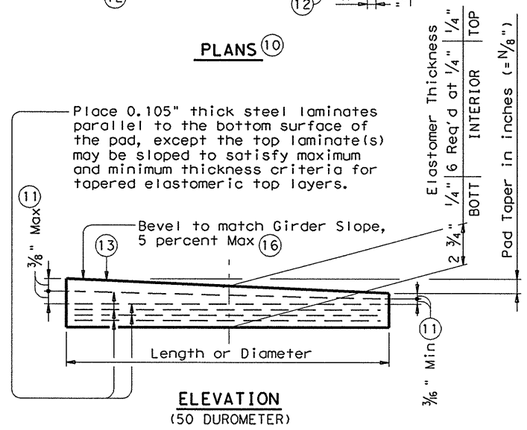

ELEVATION
(50 DUROMETER)

LAMINATED ELASTOMERIC BEARING DETAILS (14)

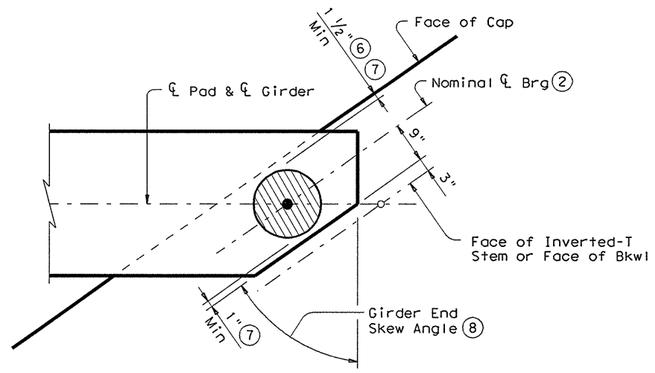

ROUND BEARINGS FOR SKEWED GIRDER ENDS AT FACE OF INVERTED-T STEM OR FACE OF BKWL

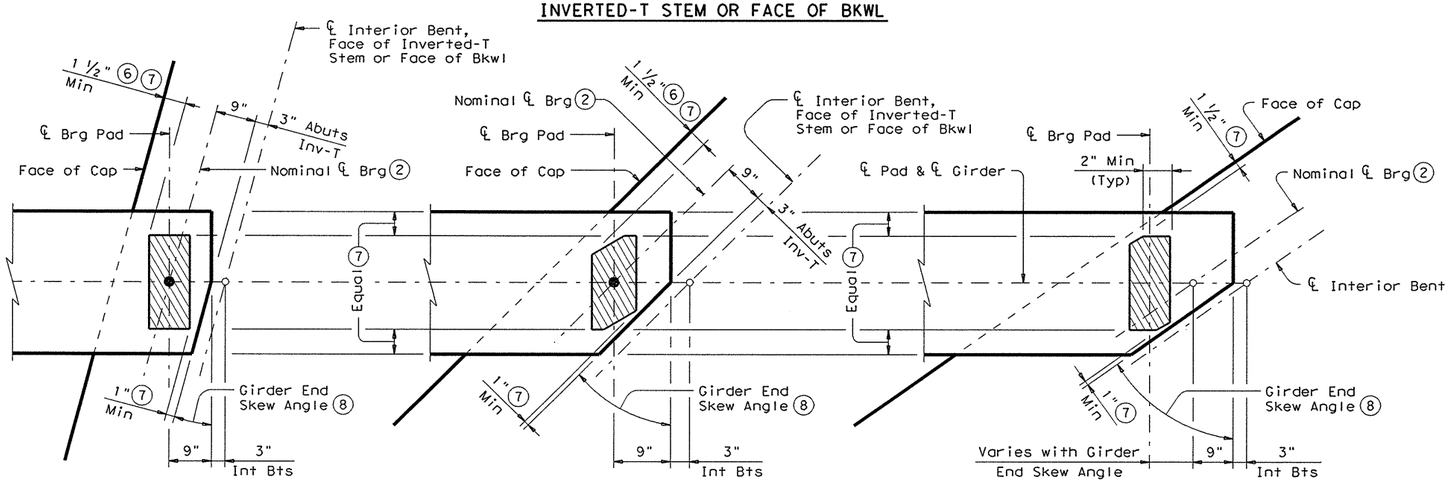

SKEWED GIRDER ENDS AT INT BENTS, FACE OF INVERTED-T STEM OR FACE OF BKWL

SKEWED GIRDER ENDS AT CONVENTIONAL INTERIOR BENTS (17)
(No Girder Dowels)

ELASTOMERIC BEARING PLACEMENT DIAGRAMS

TABLE OF MINIMUM SUBSTRUCTURE DIMENSIONS (15)			
Girder Type	Abutments	Int Bents	Inv-T Bents
	Face of Bkwl to Face of Cap	Overall Cap Width	Corbel Width
Tx28 thru Tx54	1'-9"	3'-6"	1'-10 1/2"
Tx62 & Tx70	2'-0"	4'-0"	2'-1 1/2"

ELASTOMERIC BEARING DATA TABLE						
Bent Type	Girder Type	Bearing Type (13)	Girder End Skew Angle Range	Pad Size Lgth x Wdth	Pad Clip Dimensions "A"	Pad Clip Dimensions "B"
ABUTMENTS, INVERTED-T AND TRANSITION BENTS WITH BACKWALLS	Tx28, Tx34, Tx40, Tx46 & Tx54	G-1-"N"	0° thru 21°	8" x 21"	---	---
		G-2-"N"	21°+ thru 30°	8" x 21"	1 1/2"	2 1/2"
		G-3-"N"	30°+ thru 45°	9" x 21"	4 1/2"	4 1/2"
		G-4-"N"	45°+ thru 60°	15" Dia	---	---
	Tx62 & Tx70	G-5-"N"	0° thru 21°	9" x 21"	---	---
		G-6-"N"	21°+ thru 30°	9" x 21"	1 1/2"	2 1/2"
		G-7-"N"	30°+ thru 45°	10" x 21"	4 1/2"	4 1/2"
		G-8-"N"	45°+ thru 60°	10" x 21"	7 1/4"	4 1/4"
CONVENTIONAL INTERIOR BENTS	Tx28, Tx34, Tx40, Tx46 & Tx54	---	---	---	---	---
		---	---	---	---	---
		G-1-"N"	0° thru 60°	8" x 21"	---	---
	Tx62 & Tx70	G-5-"N"	0° thru 60°	9" x 21"	---	---
CONVENTIONAL INTERIOR BENTS WITH SKEWED GIRDER ENDS (GIRDER CONFLICTS) (17)	Tx28, Tx34, Tx40, Tx46 & Tx54	G-1-"N"	0° thru 18°	8" x 21"	---	---
		G-2-"N"	18°+ thru 30°	8" x 21"	1 1/2"	2 1/2"
		G-9-"N"	30°+ thru 45°	8" x 21"	3"	3"
		G-10-"N"	45°+ thru 60°	9" x 21"	6"	3 1/2"
	Tx62 & Tx70	G-5-"N"	0° thru 18°	9" x 21"	---	---
		G-5-"N"	18°+ thru 30°	9" x 21"	---	---
		G-11-"N"	30°+ thru 45°	9" x 21"	1 1/2"	1 1/2"
		G-12-"N"	45°+ thru 60°	9" x 21"	3"	1 3/4"

(2) For purposes of computing Bearing Seat Elevations, nominal centerline of bearing must be defined as shown. The actual center of bearing pad may vary from this line.

(6) 3" for Inverted-T.

(7) Factors controlling laminated bearing placement if no dowel is present. Place Centerline Pad as near Nominal Centerline Brg as possible between limits shown.

(8) Girder end skew angle is equal to 90° minus the girder angle except at some conflicting girders.

(9) Provide 2" Dia Hole only at locations required. See substructure details for location.

(10) See Elastomeric Bearing Data Table for dimensions.

(11) Maximum and minimum layer thicknesses shown are for elastomer only, on tapered layers.

(12) Locate Permanent Mark here.

(13) BEARING TYPE must be indicated on all pads. For tapered pads, BEARING TYPE must be located on the high side. The Fabricator must include the value of "N" (amount of taper in 1/8" increments) in this mark.
Examples: N=0, (for 0" taper)
N=1, (for 1/8" taper)
N=2, (for 1/4" taper)
(etc.)
Fabricated pad top surface slope must not vary from plan girder slope by more than $\left(\frac{0.0625"}{\text{Length or Dia}}\right)$ IN/IN.

(14) The use of Polyisoprene (natural rubber), for the manufacture of bearing pads, is not permitted.

(15) Substructure dimensions must satisfy the minimums provided to accommodate the elastomeric bearings shown on this standard.

(16) See sheet 3 of 3 for beveled plate use when slopes exceed 5 percent.

(17) If girder end is skewed for a girder conflict at an interior bent and a beveled sole plate is required, use bearing type for abutments at this location. Location of bearing centerline is to be set as for abutments in this case.

HL93 LOADING — SHEET 2 OF 3

Texas Department of Transportation
Bridge Division

ELASTOMERIC BEARING AND GIRDER END DETAILS
PRESTR CONCRETE I-GIRDERS

IGEB

FILE: igebstel.dgn	DN: AEE	CK: JMH	DW: JTR	CK: TxDOT
© TxDOT June 2007	DISTRICT	FEDERAL AID PROJECT		SHEET
REVISIONS 12/10: Added Sole Plate Details.	AUSTIN			518
	COUNTY	CONTROL	SECT	JOB	HIGHWAY
	WILLIAMSON	0683	06	027	SH 45, LOOP 1

DISCLAIMER:
The use of this standard is governed by the "Texas Engineering Practice Act". No warranty of any kind is made by TxDOT for any purpose whatsoever. TxDOT assumes no responsibility for the conversion of this standard to other formats or for incorrect results or damages resulting from its use.

PATH:
LEVELS DIS.
1

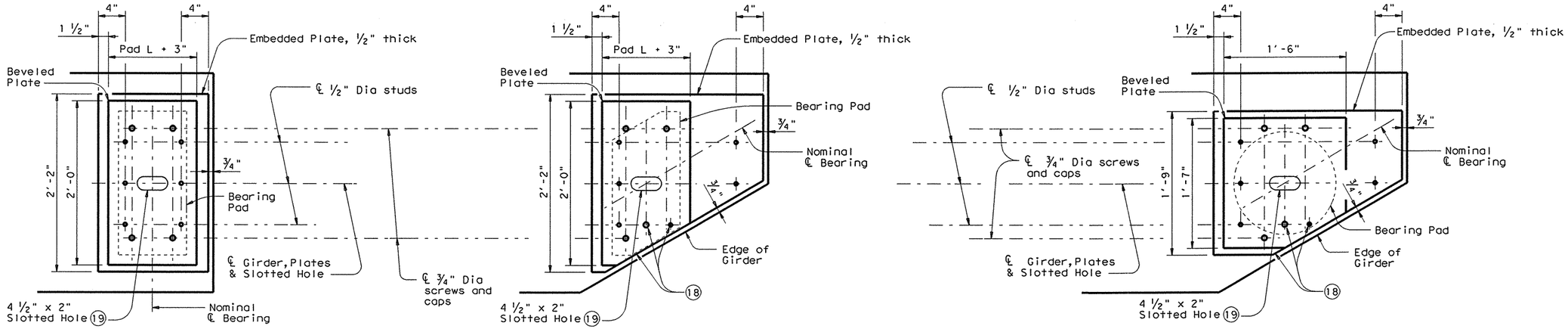

NORMAL GIRDER END
RECTANGULAR BEARING PAD

SKEWED GIRDER END
CLIPPED RECTANGULAR BEARING PAD

SKEWED GIRDER END
15" DIA BEARING PAD

PLAN VIEW OF SOLE PLATE DETAILS

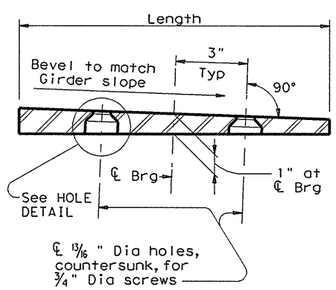

SECTION THRU BEVELED PLATE

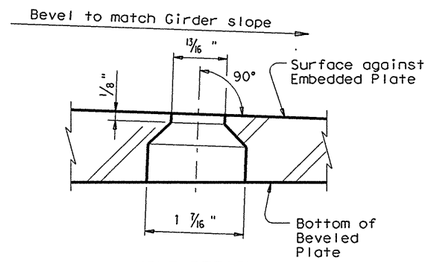

HOLE DETAIL

(18) Cut Beveled and Embedded Plates to match girder end skew. Adjust location of screw and stud as shown when necessary.

(19) Slotted hole is required at doweled girder end locations.

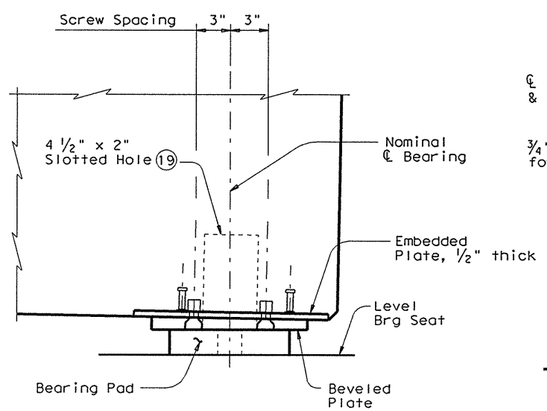

SIDE ELEVATION

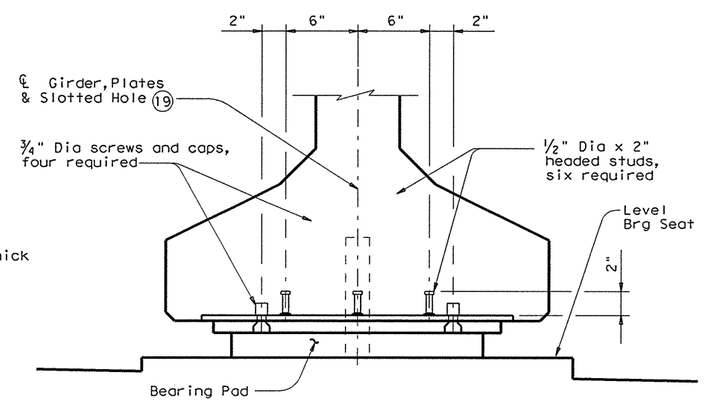

END ELEVATION

GIRDER DETAILS

SOLE PLATE NOTES:

Provide constant thickness elastomeric bearings with beveled and embedded steel sole plates in accordance with these details when the girder slope exceeds 5 percent or if otherwise required in the plans. Provide for all girders in the span.

On the shop drawings, dimension sole plates to the nearest 1/16" based on required thickness at centerline of bearing and slope of girder. Thickness tolerance variation from the approved shop drawings is 1/16"+/-, except variation from a plane parallel to the theoretical top surface can not exceed 1/16" total. Bearing surface tolerances listed in Item 424 apply to embedded and beveled plates.

Steel plate must conform to ASTM A 36, A 572 Gr 50, or A 709 Gr 36 or Gr 50. Hot dip galvanize both the embedded plate and beveled sole plate after fabrication. Seal weld caps to embedded plate before galvanizing.

When determining if relocation of screw holes and studs are necessary for skewed girder ends, minimum clearance from screw or stud centerline to plate edge is 1.25".

Tap threads in the embedded plate only. Drill and tap prior to galvanizing.

¾" Dia screws must be electroplated, socket flat head countersunk cap screws conforming to ASTM F 835. Electroplating must conform to ASTM B 633, SC 2, Type I. Provide screws long enough to maintain a ¾" minimum embedment into the embedded plate and galvanized cap. Provide galvanized steel caps (16 ga Min) with a nominal 1" inside diameter and deep enough to accommodate the screws, but not less than ½" deep or deeper than 1".

Install beveled sole plates prior to shipping girders. Installed screw heads must not protrude below the bottom of the beveled plate.

HL93 LOADING — SHEET 3 OF 3

Texas Department of Transportation
Bridge Division

ELASTOMERIC BEARING AND GIRDER END DETAILS
PRESTR CONCRETE I-GIRDERS

IGEB

FILE: igebstel.dgn	DN: JMH	CK: TxDOT	DW: BWH	CK: JMH
© TxDOT June 2007	DISTRICT	FEDERAL AID PROJECT		SHEET
REVISIONS	AUSTIN			518A
12/10: Added Sole Plate Details.	COUNTY	CONTROL	SECT	JOB	HIGHWAY
	WILLIAMSON	0683	06	027	SH 95 LOOP 1

DISCLAIMER:
The use of this standard is governed by the "Texas Engineering Practice Act". No warranty of any kind is made by TxDOT for any purpose whatsoever. TxDOT assumes no responsibility for the conversion of this standard to other formats or for incorrect results or damages resulting from its use.

PATH:
LEVELS DISPLAYED

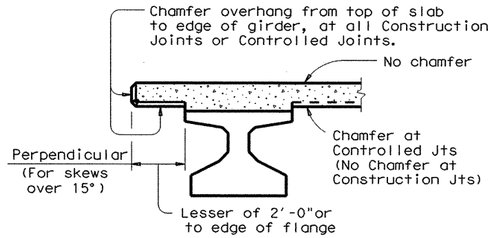

CHAMFER LIMITS DETAIL (1)

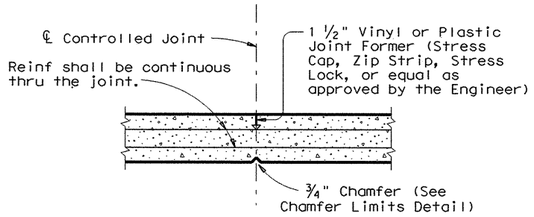

CONTROLLED JOINT DETAIL

(Saw-cutting will not be allowed)

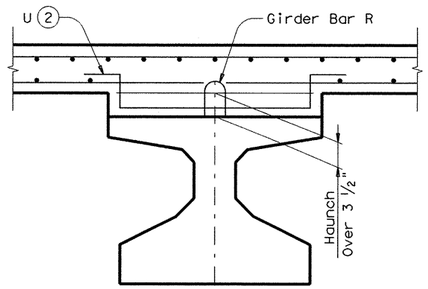

HAUNCH REINFORCING DETAIL

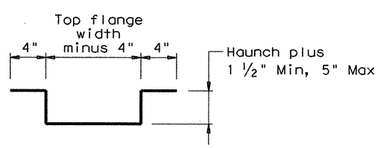

BARS U (#4)

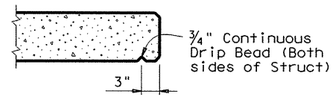

DRIP BEAD DETAIL

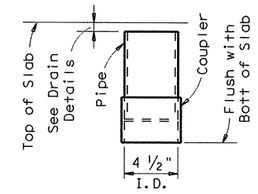

C-I-P DRAIN DETAIL (8)

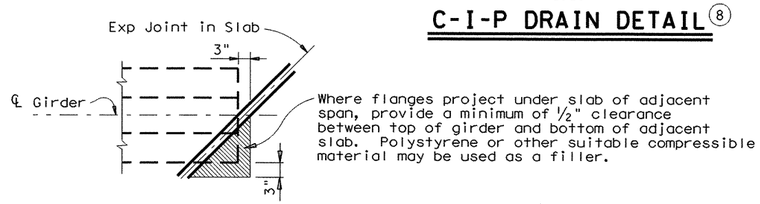

TREATMENT AT GIRDER END FOR SKEWED SPANS

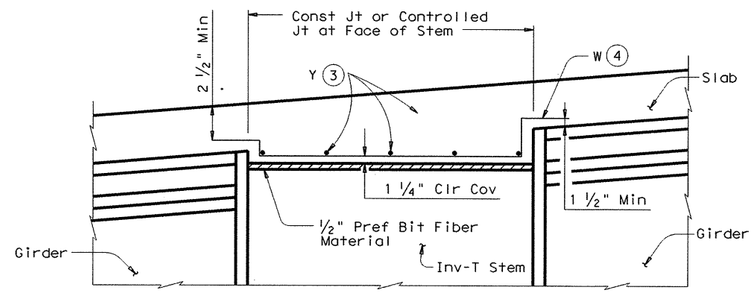

REINFORCEMENT OVER INV-T BENTS

Slab reinforcement not shown for clarity.

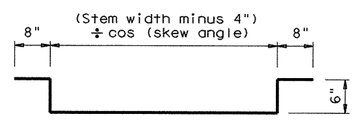

BARS W (#4)

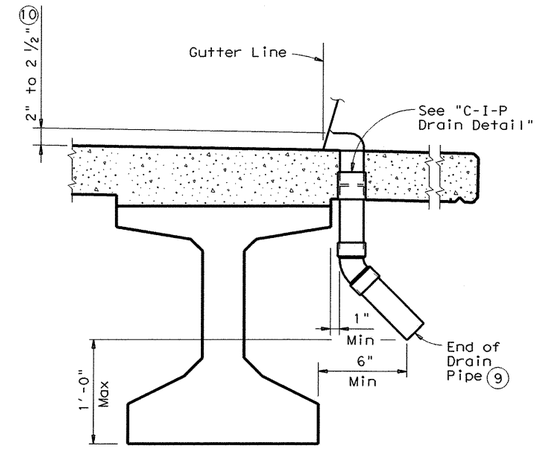

DRAIN DETAIL (11)

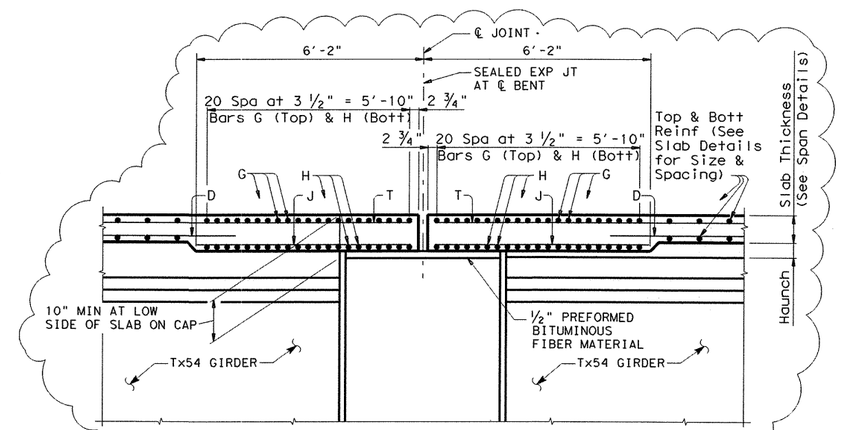

SECTION THRU INVERTED TEE CAP AT END OF UNITS

GENERAL NOTES:

Designed in accordance with AASHTO LRFD Specifications.

All items (reinforcing steel, drains, joint formers, etc.) shown on this sheet shall be considered subsidiary to other bid items.

DECK FORMWORK NOTES:

Overhang bracket hangers are limited to a safe working load of 3,600 lbs, applied to and along the axis of a coil rod at 45 degrees from vertical, regardless of higher loads permitted by hanger manufacturers. Do not place a hanger less than 12" from girder end. Space hangers accordingly.

(1) See Span details for type of joint and joint locations.

(2) Space Bars U with Girder Bars R in all areas where measured haunch exceeds 3 ½".

(3) Space Bars Y (#4) at 12" Max. Use 2" end cover. Number of Bars Y must satisfy spacing limit. Place parallel to bent.

(4) Space Bars W at 12" Max (3" from end of cap). Tilt if necessary to maintain cover requirements. Place parallel to longitudinal slab reinforcement.

(5) Class 7 silicone sealant that conforms to DMS-6310. Install when ambient temperature is between 55°F and 85°F and rising. Engineer to determine allowable hours for sealant application.

(6) 1 ¼" backer rod must be compatible with joint sealant. Use of multiple pieces to create a backer rod cross section is not permitted. Top of backer rod must be convex as shown.

(7) The maximum distance between Type A expansion joints is 100'. See Bridge Layout for location of joints. Type A joints will not be paid for directly, but shall be considered subsidiary to Item 420, "Concrete Structures".

(8) Roughen outside of PVC with coarse rasp or equal to ensure bond with cast-in-place concrete.

(9) No water shall be discharged onto girders.

(10) Drain Entrance formed in Rail or Sidewalk.

(11) All drain pipe and fittings to be 4" diameter (Sch 40) PVC. See Item 481 "PVC Pipe for Drains" for pipe, connections and solvent welding. Bend reinforcing steel to clear PVC 1". Drain length and location shall be as directed by the Engineer. No drains shall be permitted over roadways or railways, or within 10'-0" of Bent Caps. Degrease outside of exposed PVC, apply acrylic water base primer, then coat with same surface finishing material as used for outside girder face. Variations of the above designs, as required for the type of rail used and its location on the structure, shall be installed with the approval and direction of the Engineer.

STATE OF TEXAS
RAMKUMAR KOZHIKOTE
103166
LICENSED PROFESSIONAL ENGINEER

Ramkumar Kozhikote
4/11/2011

Texas Department of Transportation
Bridge Division

MISCELLANEOUS SLAB DETAILS
PRESTR CONCRETE I-GIRDERS

IGMS (MOD)

FILE: igmsstel.dgn	DN: TxDOT	CK: TxDOT	DW: JTR	CK: TxDOT	
©TxDOT June 2007	DISTRICT	FEDERAL AID PROJECT		SHEET	
REVISIONS 02/09 Deck Formwork Notes	AUSTIN			519	
	COUNTY		CONTROL-SECT-JOB	HIGHWAY	
	WILLIAMSON		0683-06-027	SH 45 LOOP 1	

DISCLAIMER:
The use of this standard is governed by the "Texas Engineering Practice Act". No warranty of any kind is made by TxDOT for any purpose whatsoever. TxDOT assumes no responsibility for the conversion of this standard to other formats or for incorrect results or damages resulting from its use.

ACC: LEVELS DISPLAYED 1

PLOT DRIVER: RD*11x17*PDF.plt
PEN TABLE: plotordr*ocon.tbl
FILE: r:\trans-design\o'connor\cadd\sta\bdg\IGMSSTEImod.dgn

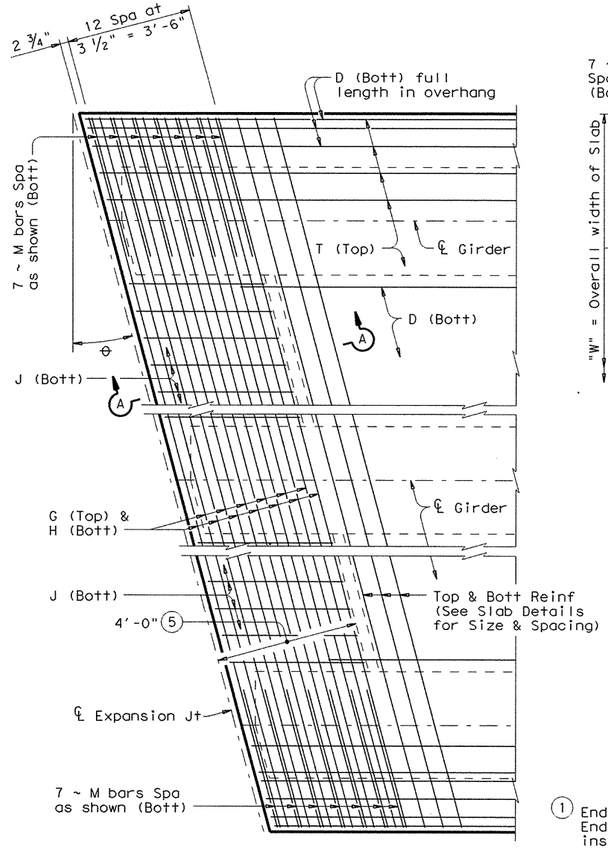

PARTIAL PLAN FOR SLABS WITHOUT BREAKBACK

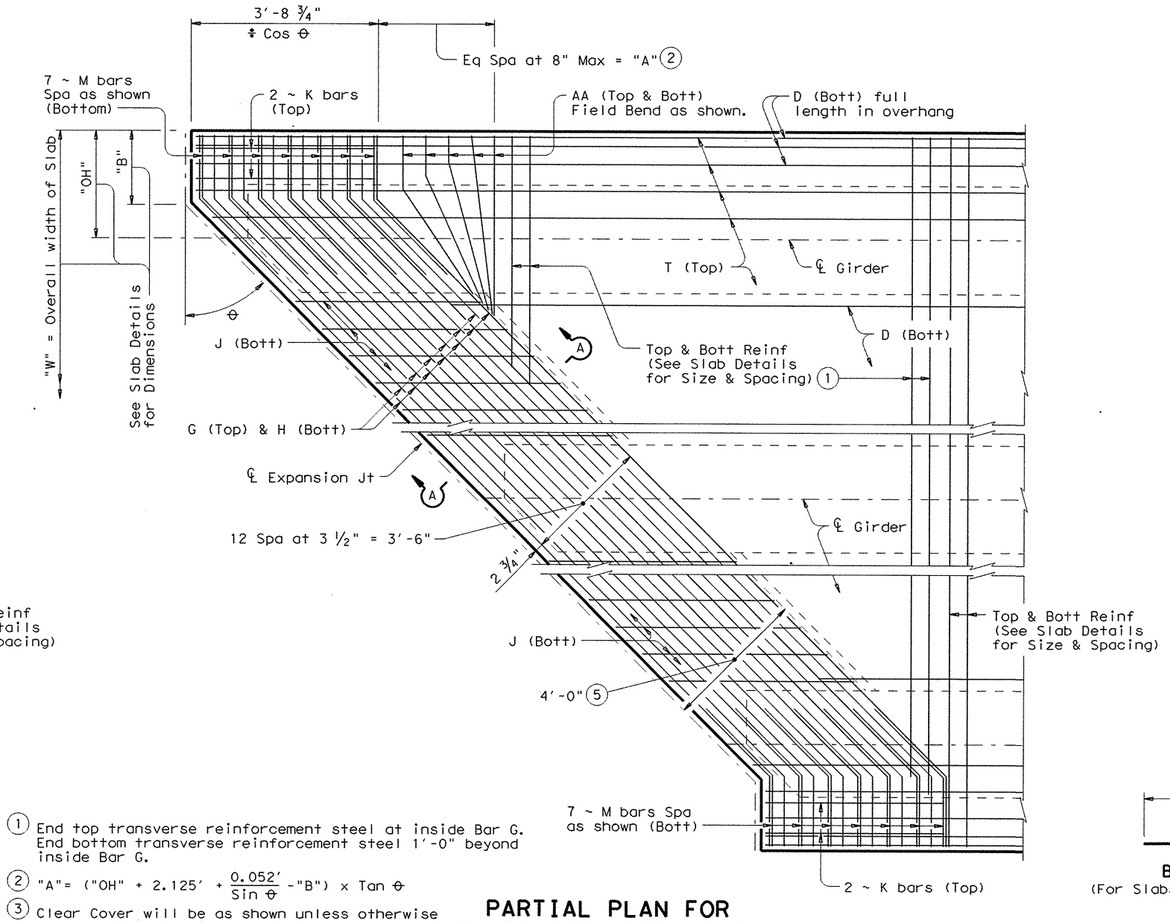

PARTIAL PLAN FOR SLABS WITH BREAKBACK

1. End top transverse reinforcement steel at inside Bar G. End bottom transverse reinforcement steel 1'-0" beyond inside Bar G.
2. "A"= ("OH" + 2.125' + $\frac{0.052'}{\sin\theta}$ -"B") x Tan θ
3. Clear Cover will be as shown unless otherwise shown on Span Details.
4. Only required on slabs with breakbacks.
5. Thickened Slab End dimensioned perpendicular to Face of Bkwl, Centerline Interior Bent or Face of Inverted-T Stem.

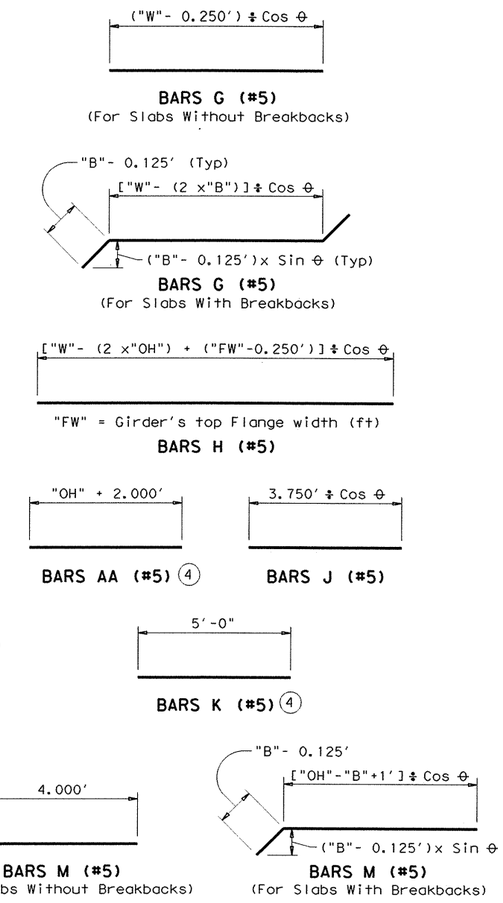

GENERAL NOTES:

Designed according to AASHTO LRFD Specifications.

These details are restricted to Prestressed Concrete I-Girder Spans.

These details are to be used in conjunction with the Span Details and Standard PCP (if prestressed concrete panels are used).

All reinforcing bars must be Grade 60 steel.

If slab reinforcing steel is shown on the Slab Details to be epoxy coated, then Bars AA, G, K, H, J and M must be epoxy coated.

Bar laps, where required, will be as follows:

Uncoated ~ #4 = 1'-5"
~ #5 = 1'-9"
Epoxy Coated ~ #4 = 2'-1"
~ #5 = 2'-7"

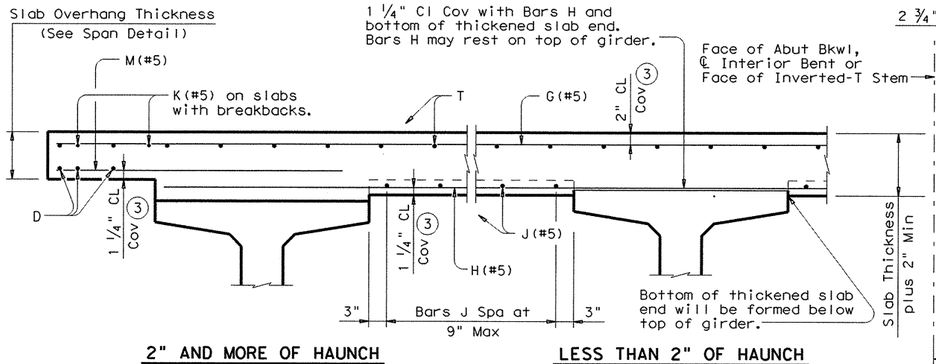

2" AND MORE OF HAUNCH

LESS THAN 2" OF HAUNCH

TYPICAL TRANSVERSE SECTION

(Showing Prestressed Conc I-Girders at ℄ Brg)

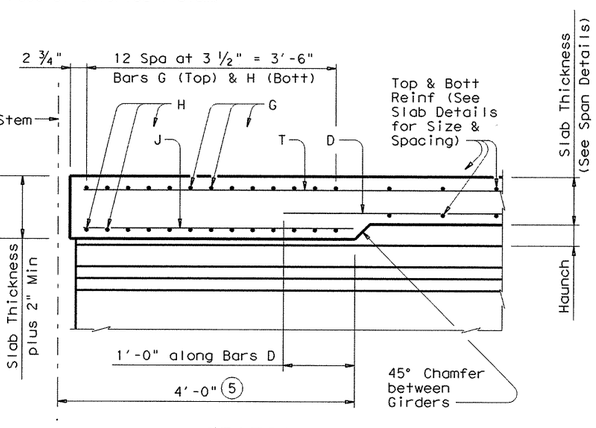

SECTION A-A

(Showing with 2" and more of Haunch)

HL93 LOADING

Texas Department of Transportation
Bridge Division

THICKENED SLAB END DETAILS
PRESTRESSED CONCRETE I-GIRDER SPANS

IGTS

FILE: igtsstel.dgn	DN: TxDOT	CK: TxDOT	DW: JTR	CK: TxDOT	
© TxDOT June 2007	DISTRICT	FEDERAL AID PROJECT		SHEET	
REVISIONS	AUSTIN			520	
	COUNTY		CONTROL -SECT- JOB	HIGHWAY	
	WILLIAMSON		0683-06-027	SH 45, LOOP 1	

DISCLAIMER:
The use of this standard is governed by the "Texas Engineering Practice Act". No warranty of any kind is made by TxDOT for any purpose whatsoever. TxDOT assumes no responsibility for the conversion of this standard to other formats or for incorrect results or damages resulting from its use.

PATH:

LEVELS DISPL.

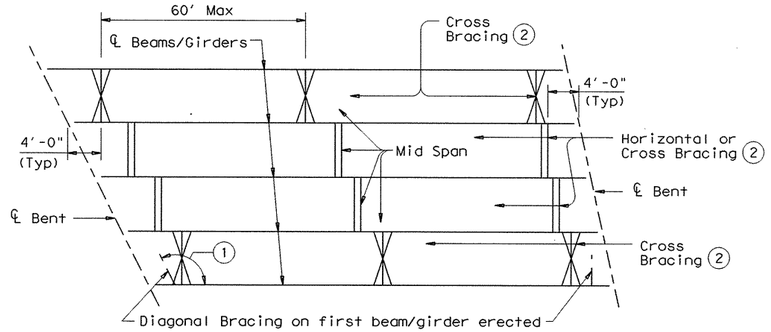

ERECTION BRACING

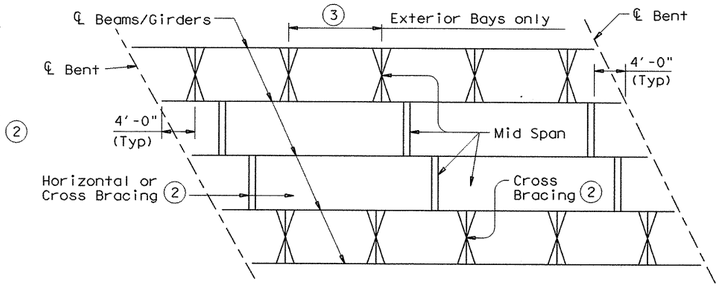

SLAB PLACEMENT BRACING

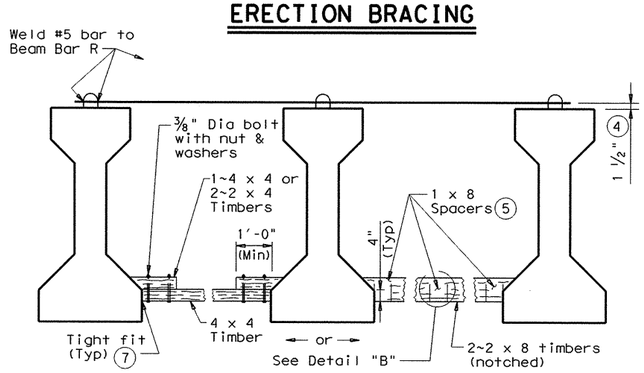

HORIZONTAL BRACING DETAILS (6)

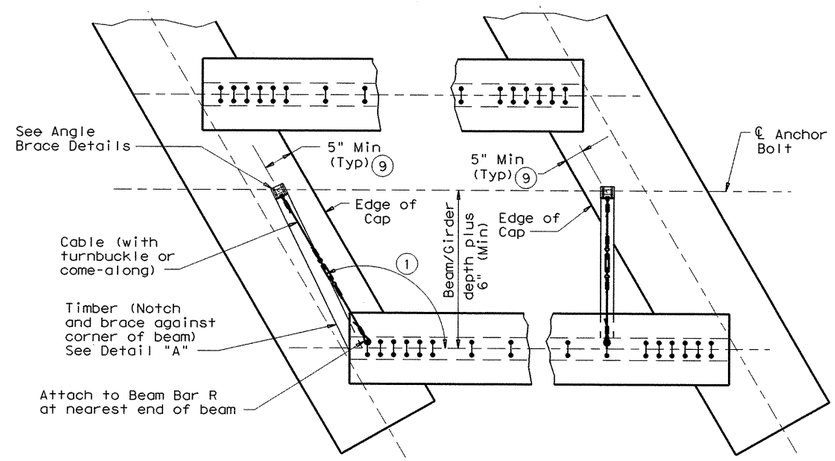

PLAN

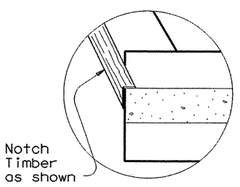

DETAIL "A"

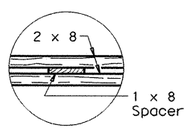

PLAN

DETAIL "B"

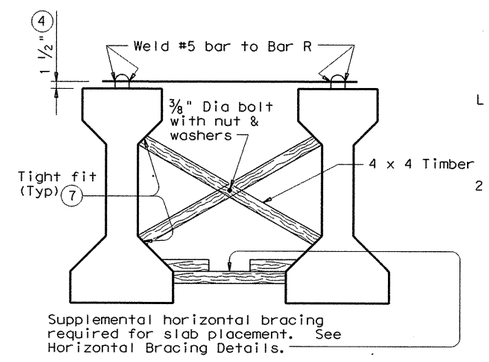

CROSS BRACING DETAIL (6)

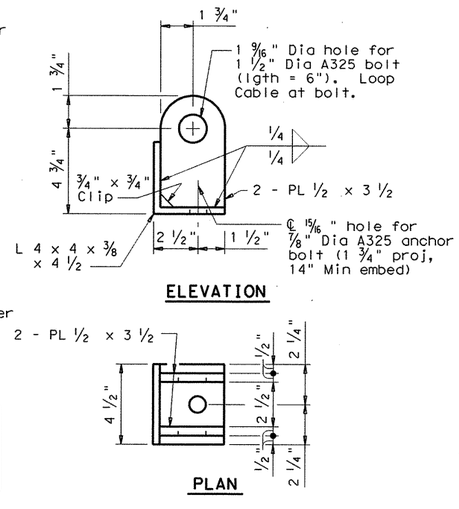

ANGLE BRACE DETAILS

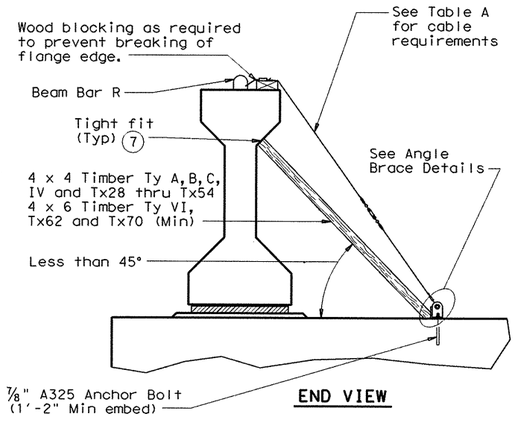

DIAGONAL BRACING DETAILS (6)

(To be used on both ends of the first beam/girder erected in the span.)

TABLE A	
Girder /Beam Type	Min Cable Breaking Strength (8)
A	10.5 K
B	12.5 K
C	15.9 K
IV	21.8 K
VI	26.8 K
Tx28	18.9 K
Tx34	21.6 K
Tx40	23.1 K
Tx46	24.5 K
Tx54	26.2 K
Tx62	27.9 K
Tx70	27.9 K

HAULING & ERECTION:

The Contractor's attention is directed to the possible lateral instability of prestressed concrete beams and girders over 130' long, especially during hauling and erection. The use of the following methods to improve stability is encouraged: Locate lifting devices at the maximum practical distance from beam ends; use external lateral stiffening devices during hauling and erection; lift with vertical lines using two machines; and take care in handling to minimize inertial and impact forces.

ERECTION BRACING:

Erection bracing details shown are considered the minimum for fulfilling the bracing requirements of Item 425.

Required erection bracing must be placed immediately after erection of each beam and remain in place until additional bracing as required for slab placement is in place. This standard is needed in all cases to meet requirements for Slab Placement Bracing.

SLAB PLACEMENT BRACING:

The details for slab placement bracing are considered minimum for fulfilling the requirements of Specification Item 420.

Required slab placement bracing must remain in place until slab concrete has attained a compressive strength of 3000 psi.

GENERAL NOTES:

Bracing details for closely spaced beams and girders (as on ramps or railroad structures) are not included. Details for spans longer than 150' are not provided. The Contractor must submit his proposed bracing details for such conditions to the Engineer for approval prior to erection.

Systems equal to or better than those shown may be used provided details of such systems are submitted to and approved by the Engineer prior to erection.

Use of these systems and/or details does not relieve the Contractor of the responsibility for the adequacy of the bracing and the safety of the structure.

Removal of bracing for short periods of time to align beams and girders is permissible.

All turn-buckles, come-alongs, anchors and other connections must be capable of developing the full strength of the cable shown.

(1) If angle shown exceeds 120 degrees, move diagonal brace to other side of beam/girder and place square to beam/girder. This may prevent exterior beam from being erected first.

(2) Cross bracing must be placed between the first two beams/girders erected, in exterior bays, and in every fourth bay. At the Contractor's option, remaining bays may have either cross-bracing or horizontal bracing.

(3) 15'-0" Max for Type A, B beams and Tx28 and Tx34 girders. 30'-0" Max for all others.

(4) Place and weld #5 bars as shown during erection. If forming deck with prestressed panels, bars can be temporarily removed, one at a time, during panel erection. Re-install bar prior to additional panel erection. Bars can rest on panels and be bent down and welded to Beam Bars R.

(5) Clear distance between spacers must not exceed 3'. Nail together with 16d nails.

(6) Pressure treated landscape timbers can not be used.

(7) Use wedges as necessary to obtain tight fit. Nail wedges to timbers.

(8) All hardware used with cable must be able to develop the minimum breaking strength specified. Use thimbles at all loops in cable. Install cable clamps with saddles bearing against the live end and U-bolts bearing aginst the dead end.

(9) It is acceptable to tie anchor bolts to cap reinforcement.

DISCLAIMER:
The use of this standard is governed by the "Texas Engineering Practice Act". No warranty of any kind is made by TxDOT for any purpose whatsoever. TxDOT assumes no responsibility for the conversion of this standard to other formats or for incorrect results or damages resulting from its use.

Texas Department of Transportation
Bridge Division

MINIMUM ERECTION AND BRACING REQUIREMENTS
PRESTRESSED CONCRETE I-BEAMS AND I-GIRDERS

MEBR(C)

FILE: mebcstel.dgn	DN: TxDOT	CK: TxDOT	DW: TxDOT	CK: TxDOT
©TxDOT January 2005	DISTRICT	FEDERAL AID PROJECT		SHEET
REVISIONS	AUSTIN			521
06-2007: Revised "Cross Bracing Detail", Hauling, Erection Note and added I-Girders.	COUNTY		CONTROL-SECT-JOB	HIGHWAY
	WILLIAMSON		0683-06-027	IH 35 (LOOP)

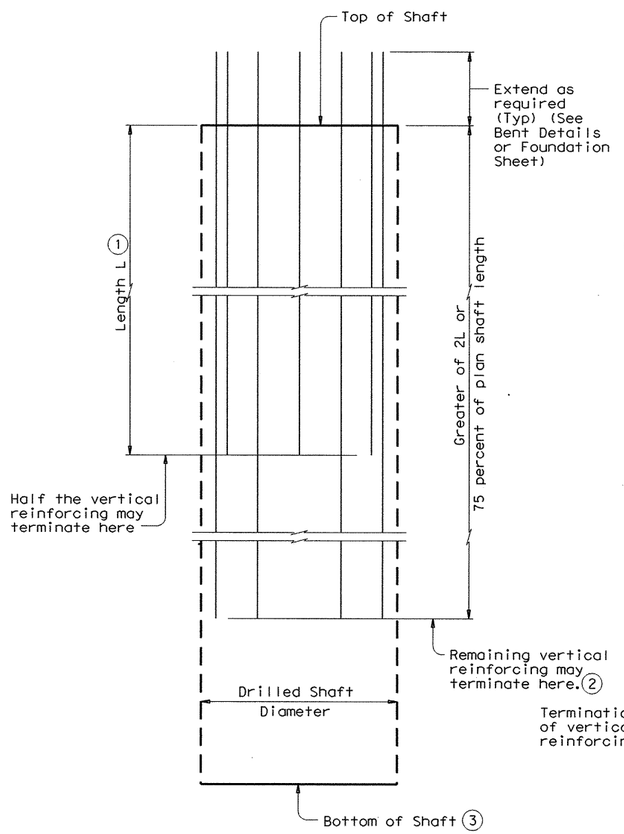

VERTICAL REINFORCING OPTION
(Lateral reinforcing not shown for clarity)

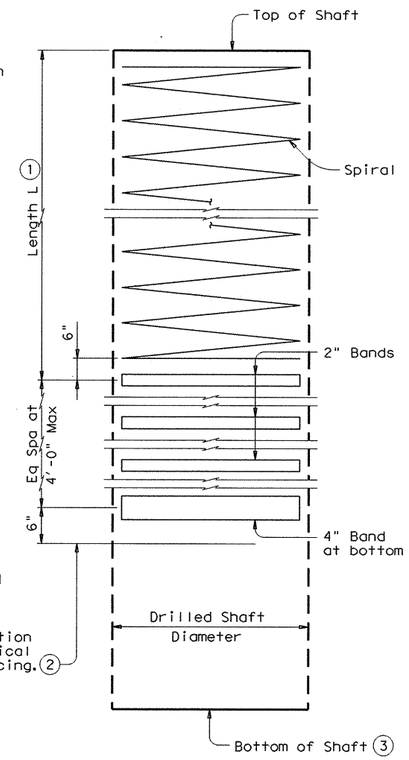

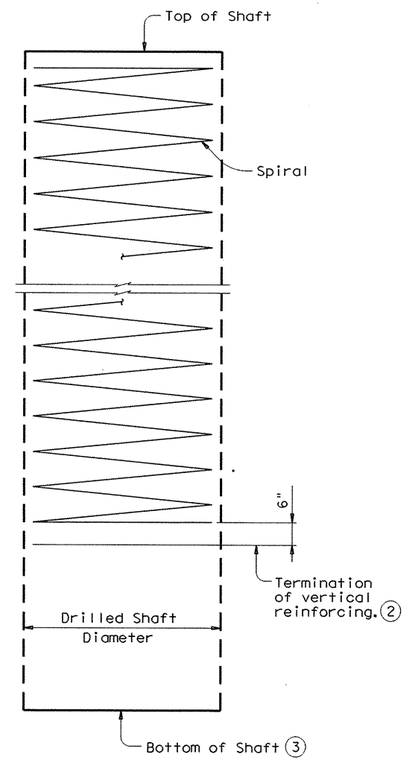

LATERAL REINFORCING OPTIONS
(Vertical reinforcing not shown for clarity)

ELEVATIONS

(1) See Table for length L.

(2) When steel does not extend the full shaft length, the Contractor must demonstrate adequacy of the temporary support procedures to the satisfaction of the Engineer.

(3) Vertical bars may be supported on bottom of drilled hole if material is firm enough to do so when concrete is placed

(4) Spiral to be at the pitch and diameter as shown elsewhere in the plans.

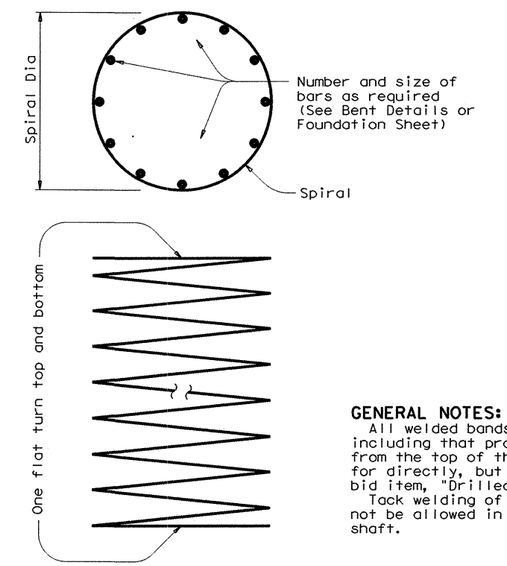

SPIRAL DETAIL (4)

GENERAL NOTES:

All welded bands and reinforcing steel, including that projecting the required amount from the top of the shaft, shall not be paid for directly, but shall be subsidiary to the bid item, "Drilled Shafts".

Tack welding of spiral to main steel will not be allowed in the upper 15' of drilled shaft.

LENGTH L		
Drilled Shaft Diameter	Length L	Note
(Inches)	(Feet)	The length L is measured from top of shaft, natural ground, or finished ground, whichever results in the longer length of full reinforcement.
18 & 24	24	
30 & 36	30	
42 & larger	10 Shaft Diameters	

These details may only be used for bridge foundations not in or adjacent to waterways. They may only be used for multi-column bents and abutments, excluding abutments supported by drilled shaft retaining walls. Other applications must receive approval of the Engineer.

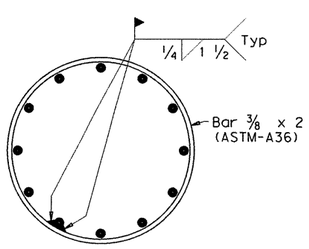

TOP

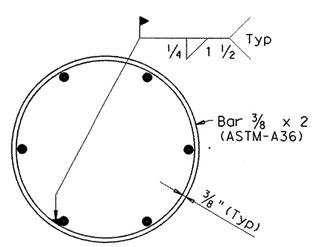

INTERIOR

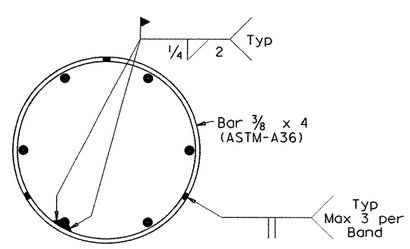

BOTTOM

BAND DETAILS

Texas Department of Transportation
Bridge Division

OPTIONAL DRILLED SHAFT REINFORCING

ODSR

FILE: odsstdel.dgn	DN: TxDOT	CK: TxDOT	DW: TxDOT	CK: TxDOT
©TxDOT April 2006	DISTRICT	FEDERAL AID PROJECT		SHEET
REVISIONS	AUSTIN			522
	COUNTY		CONTROL-SECT-JOB	HIGHWAY
	WILLIAMSON		0683-06-027	IH 35 LOOP 1

DISCLAIMER:
The use of this standard is governed by the "Texas Engineering Practice Act". No warranty of any kind is made by TxDOT for any purpose whatsoever. TxDOT assumes no responsibility for the conversion of this standard to other formats or for incorrect results or damages resulting from its use.

LEVELS DISPLAY
PATH:

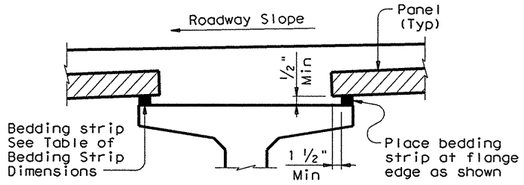

NORMAL GRADING DETAIL (1)

Showing Prestressed Concrete I-Girders.
(Other Beam Types Similar)

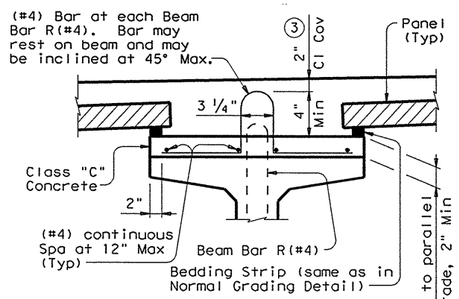

SPECIAL GRADING DETAIL FOR CONCRETE BEAMS

Showing Prestressed Concrete I-Girders.
(Other Beam Types Similar)

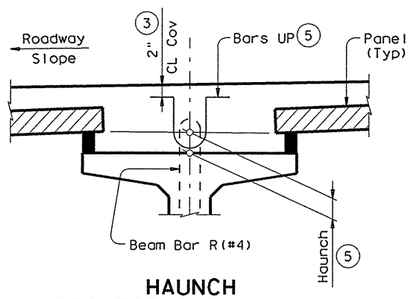

HAUNCH REINFORCING DETAIL

Showing Prestressed Concrete I-Girders.
(Other Beam Types Similar)

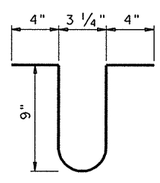

BARS UP (#4) (5)

TABLE OF BEDDING STRIP DIMENSIONS		
WIDTH	HEIGHT (2)	
	Min	Max
1" (Min)	1/2"	2"
1 1/4"	1/2"	2 1/2"
1 1/2"	1/2"	3"
1 3/4"	1/2"	3 1/2"
2" (Max)	1/2"	4"

(1) To reduce the quantity of cast-in-place concrete, bedding strip thickness may be increased in 1/4" increments. Bedding strips must be comprised of one layer. Bond bedding strips to the beams with an adhesive compatible with bedding strips. Bedding strips over 2.5" high may need to be bonded to panels. The same thickness strip must be used under any one panel edge and the maximum change in thickness between adjacent panels is 1/4". Alternatively, bedding strips may be cut to grade. Panels may be supported by an alternate method, using a commercial product, if approved by the Engineer of Bridge Design, Bridge Division.

(2) Height must not exceed twice the width.

(3) Clear cover shall be as indicated unless otherwise shown on Span Details.

(4) See Span Details for top slab reinforcement and clear cover. Longitudinal top slab reinforcement may rest on top of prestressed concrete panels if necessary to maintain clear cover.

(5) Space Bars UP(#4) with Beam Bars R(#4) in all areas where measured haunch exceeds 3" or 3 1/2" with Prestressed Concrete I-Girders. Epoxy coating for Bars UP is not required.

(6) Construction Joints cannot be located on top of a panel.

(7) Butt adjacent bedding strips together with adhesive. Cut v-notches, approx 1/4" deep, in the top of the bedding strips at 8' o.c..

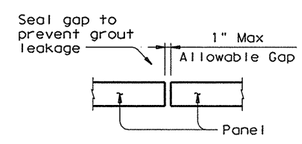

TYPICAL SECTION AT PANEL JOINT

(Panel reinforcing not shown for clarity.)
The gap cannot be considered as a panel fabrication tolerance.

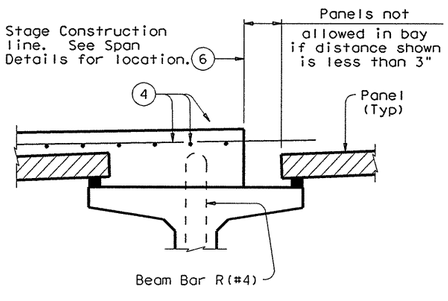

PRESTR CONC I-GIRDERS

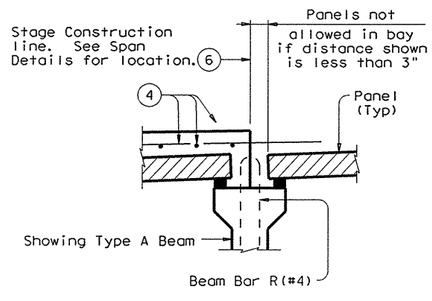

PRESTR CONC I-BEAMS

STAGE CONSTRUCTION LIMITATIONS

(Other Beam Types Similar)

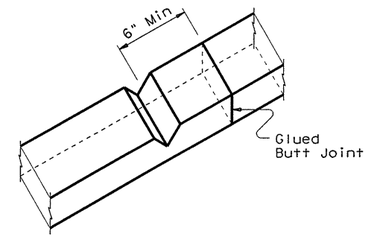

BEDDING STRIP DETAIL (7)

CONSTRUCTION NOTES:

Erected panels must bear uniformly on bedding strips of extruded polystyrene placed along top flange edges.

If additional blocking is needed, special grading details for supporting the panels and extra reinforcing between beam and slab will be considered subsidiary to deck construction.

Bars U, shown on PCP-FAB, may be bent over or cut off if necessary.

Care must be taken to ensure proper cleaning of construction debris and consolidation of concrete mortar under the edges of the panels. Bedding strips must be placed at beam flange edges so that adequate space is provided for the mortar to flow a minimum of 1 1/2" under the panels as the slab concrete is placed.

To allow the proper amount of mortar to flow between beam and panel, the minimum vertical opening must be at least 1/2". Roadway cross-slope reduces the opening available for entry of the mortar. Bedding strips varying in thickness across the beam are therefore required.

All reinforcing steel in the cast-in-place slab must be Grade 60. See Table of Reinforcing Steel for size and spacing of reinforcement.

If the top and bottom layer of reinforcing steel is shown on the Span Details to be epoxy coated, then the D, E, P, & Z bars must be epoxy coated.

For clear span between U-beams less than or equal to 18", see Permissible Slab Forming Detail on Miscellaneous Slab Detail sheets, UBMS.

Bar Laps, where required, must be as follows:

Uncoated	~ #4	= 1'-5"
	~ #5	= 1'-9"
Epoxy Coated	~ #4	= 2'-1"
	~ #5	= 2'-7"

GENERAL NOTES:

Designed according to AASHTO LRFD Specifications.

Panel placement may follow either Option 1 or Option 2 except Option 1 must be used where the slab is continuous over inverted-T bents or if the skew exceeds 45 degrees.

Use of Prestressed Concrete Panels is not permitted for horizontally curved steel plate or tub girders. See Span Details for other possible restrictions on their use.

These details are to be used in conjunction with the Span Details, PCP-FAB and other applicable Standard sheets.

Any additional reinforcement or concrete required on this standard is to be considered subsidiary to the bid item "Reinforced Concrete Slab".

HL93 LOADING — SHEET 1 OF 4

Texas Department of Transportation
Bridge Division

PRESTRESSED CONCRETE PANELS
OPTIONAL DECK DETAILS

PCP

FILE: pcpstde1.dgn	DN: TxDOT	CK: TxDOT	DW: JTR	CK: JMH	
© TxDOT April 2006	DISTRICT	FEDERAL AID PROJECT			SHEET
REVISIONS 08-07: Added I-Girders & added note to WWR splice detail. 10-10: Added Option 2 & referenced PCP-FAB.	AUSTIN				523
	COUNTY		CONTROL	SECT	JOB	HIGHWAY
	WILLIAMSON		0683	06	027	SH 45 LOOP 1

DISCLAIMER:
The use of this standard is governed by the "Texas Engineering Practice Act". No warranty of any kind is made by TxDOT for any purpose whatsoever. TxDOT assumes no responsibility for the conversion of this standard to other formats or for incorrect results or damages resulting from its use.

PATH:
LEVELS DISPLAYED

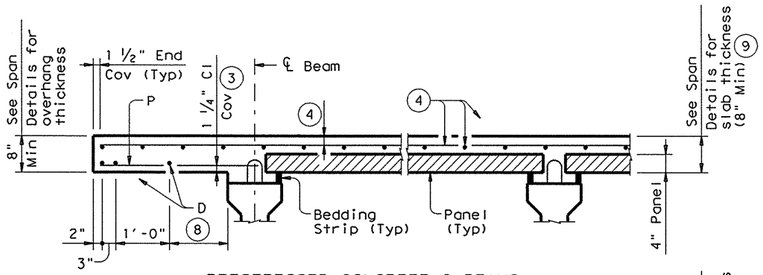

PRESTRESSED CONCRETE I-BEAMS

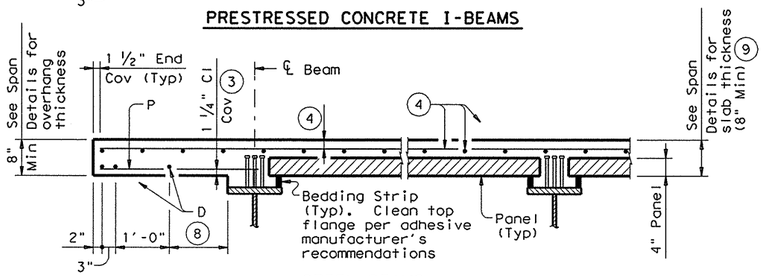

STEEL BEAMS

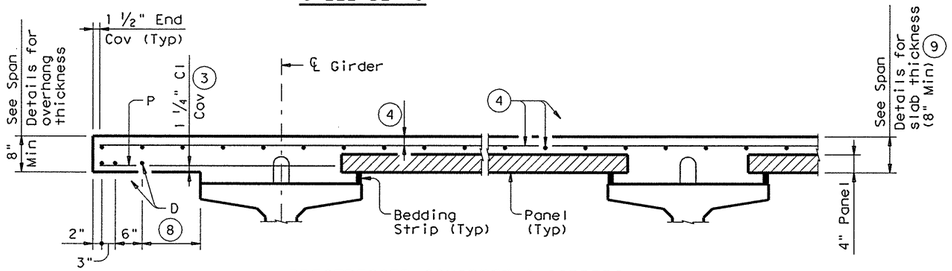

PRESTRESSED CONCRETE I-GIRDERS

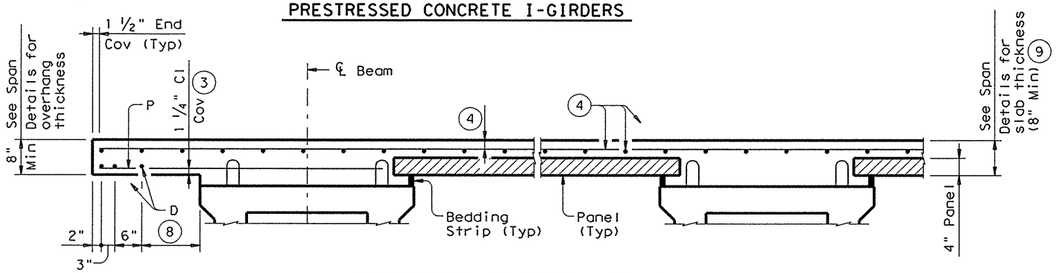

PRESTRESSED CONCRETE X-BEAMS

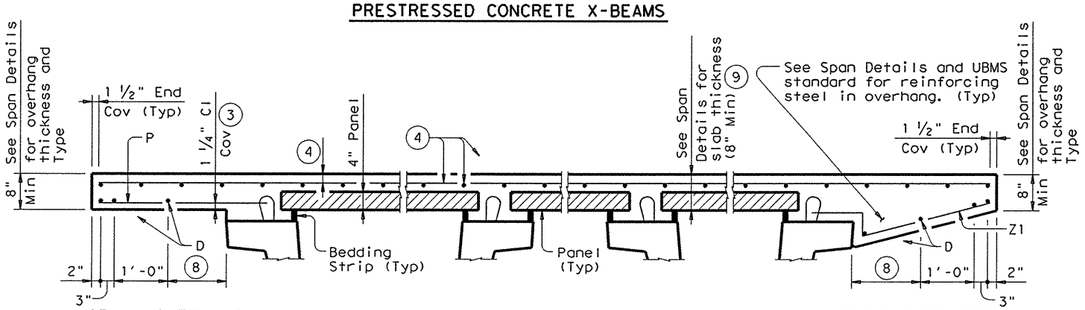

NORMAL OVERHANG WITH PRESTR CONC U-BEAMS

SLOPED OVERHANG WITH PRESTR CONC U-BEAMS

TYPICAL PART TRANSVERSE SECTIONS

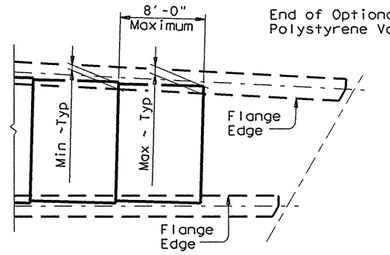

AT FLARED BEAMS OR GIRDERS

See PCP-FAB standard for Min and Max dimensions based on Bm/Girder type.

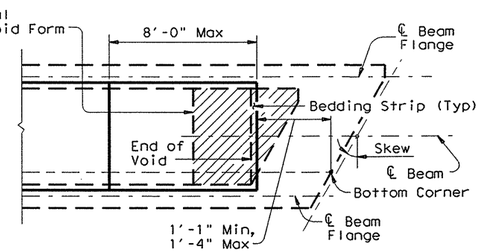

OVER CONC U-BEAMS

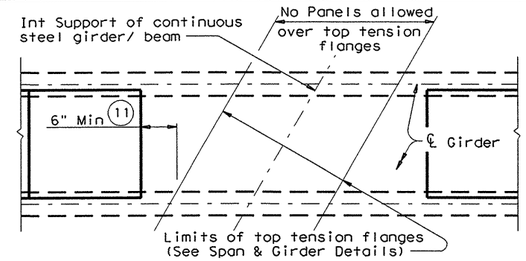

AT INT SUPPORTS OF CONTINUOUS STEEL GIRDERS

PART PLANS OF PANEL PLACEMENT

(3) Clear cover shall be as indicated unless otherwise shown on Span Details.

(4) See Span Details for top slab reinforcement and clear cover. Longitudinal top slab reinforcement may rest on top of prestressed concrete panels if necessary to maintain clear cover.

(7) Butt adjacent bedding strips together with adhesive. Cut v-notches, approx ¼" deep, in the top of the bedding strips at 8' o.c..

(8) Equally space additional bar if more than 1'-3" Max.

(9) The actual thickness constructed may exceed the slab thickness shown on the Span Details but the extra thickness shall be no more than 2" (1" for Prestressed Concrete U-Beams and Steel Beams). Bearing Seat Elevations or finished grade may be adjusted.

(10) Field adjust Bars Z1(#4) to match actual slope of slab overhangs. Width of slab overhang will vary along span with curved slab edges. Adjust Bar Z1(#4) dimensions to maintain proper cover. Bars Z2(#4) are located at Inv-T stems only.

(11) Location of concrete placement sequence boundaries and bolted field splices should be considered by the contractor in determining panel limits.

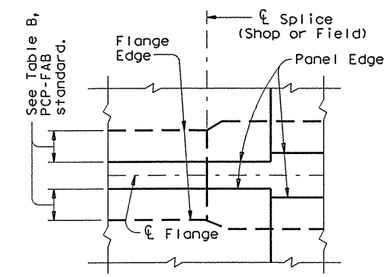

PLAN AT SPLICE

(Showing Steel Bms with flange width transition)

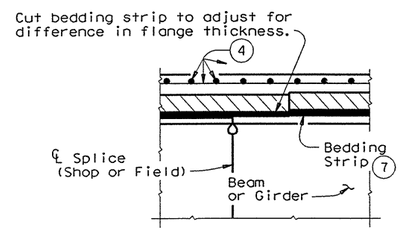

ELEVATION AT SPLICE

(Showing Steel Bms with different flange thickness)

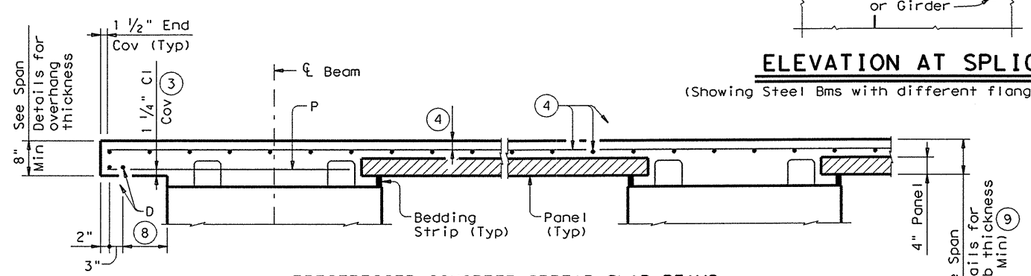

PRESTRESSED CONCRETE SPREAD SLAB BEAMS

Bars P over exterior beams are still required when no overhang is used. In this case, only one Bar D, 2" from slab edge, is required.

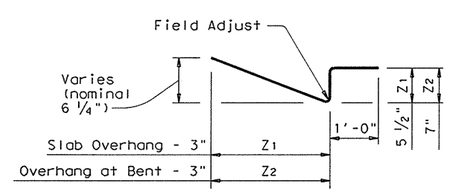

BARS Z (#4) (10)

HL93 LOADING

SHEET 2 OF 4

Texas Department of Transportation
Bridge Division

PRESTRESSED CONCRETE PANELS
OPTIONAL DECK DETAILS

PCP

FILE: pcpstdel.dgn	DN: TxDOT	CK: TxDOT	DW: JTR	CK: JMH
©TxDOT April 2006	DISTRICT	FEDERAL AID PROJECT		SHEET
REVISIONS	AUSTIN			524
08-07: Added I-Girders & added note to WWR splice detail. 10-10: Added Option 2 & referenced PCP-FAB.	COUNTY	CONTROL	SECT	JOB	HIGHWAY
	WILLIAMSON	0683	06	027	SH 45 (LOOP 1)

DISCLAIMER:
The use of this standard is governed by the "Texas Engineering Practice Act". No warranty of any kind is made by TxDOT for any purpose whatsoever. TxDOT assumes no responsibility for the conversion of this standard to other formats or for incorrect results or damages resulting from its use.

PATH:

LEVELS DISPLAYED

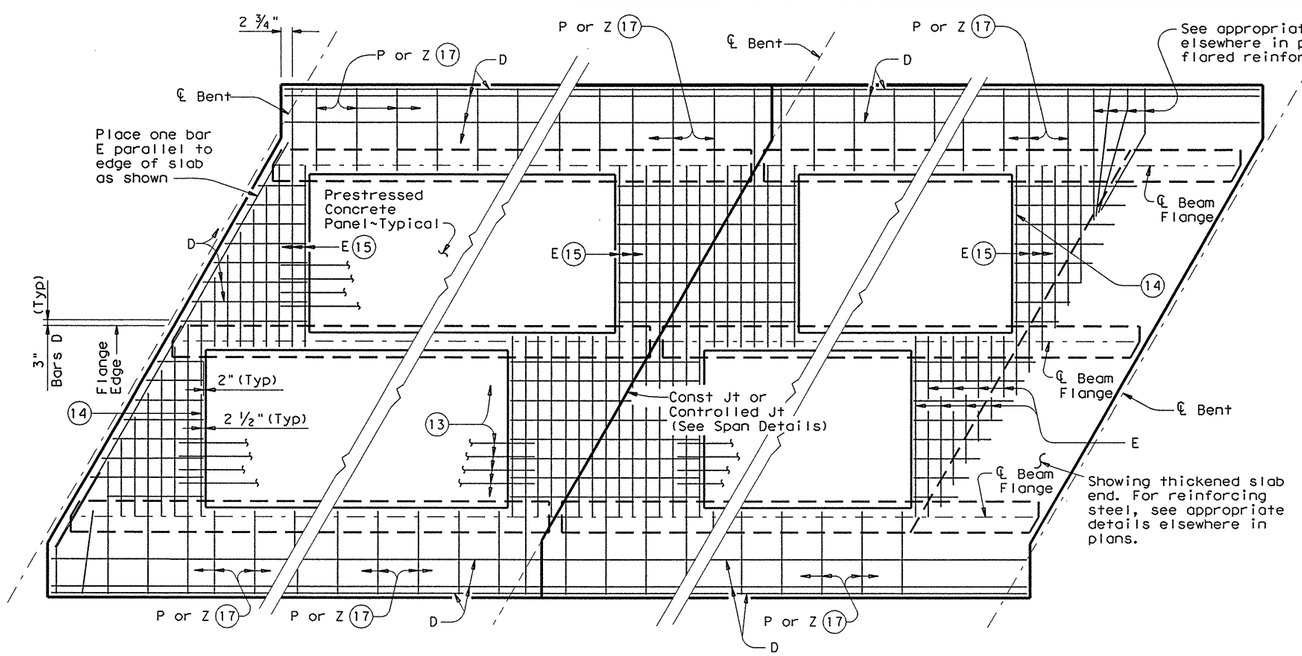

AT ALL SPAN ENDS UNLESS NOTED OTHERWISE

AT INTERIOR BENTS

AT THICKENED END SLABS

OPTION 1 ~ PLAN OF SLABS WITH NORMAL REINFORCEMENT

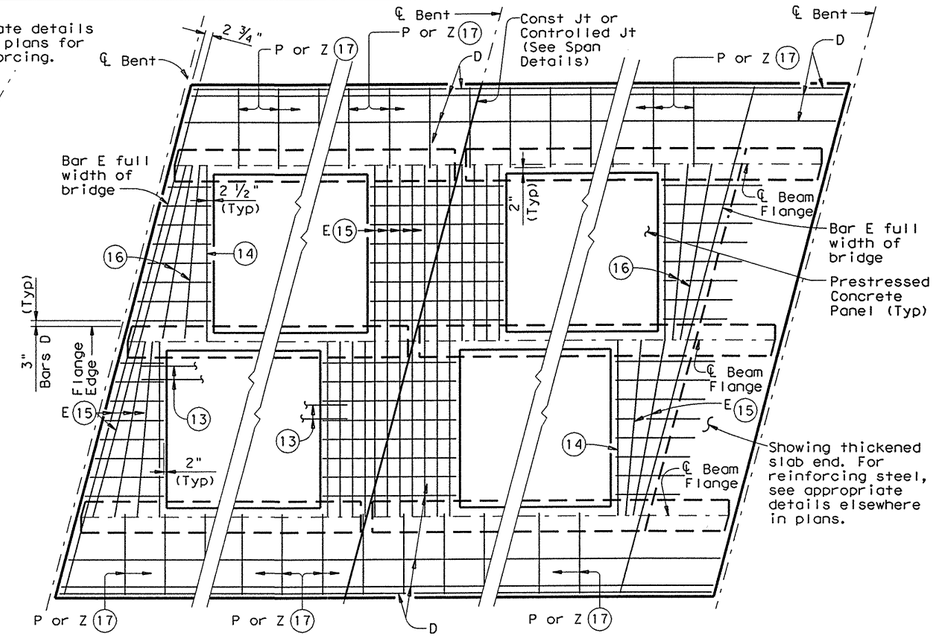

AT ALL SPAN ENDS UNLESS NOTED OTHERWISE

AT INTERIOR BENTS

AT THICKENED END SLABS

OPTION 1 ~ PLAN OF SLABS WITH SKEWED REINFORCEMENT

(4) See Span Details for top slab reinforcement and clear cover. Longitudinal top slab reinforcement may rest on top of prestressed concrete panels if necessary to maintain clear cover.

(7) Butt adjacent bedding strips together with adhesive. Cut v-notches, approx ¼" deep, in the top of the bedding strips at 8' o.c..

(12) Max Spacing as listed unless otherwise shown.

(13) At connection with cast-in-place slab, extend longitudinal panel reinforcement. See PCP-FAB for details.

(14) Maintain one Bar E(#5) parallel to panel ends (Typ).

(15) Bars E(#5) not continuous over beam flanges must overlap beam flange 6" Min.

(16) Add flared Bars E(#5) (Min Spa = 2", Max Spa = 10") as required at panel ends.

(17) Where possible, Bars E(#5) may be extended into overhangs to replace Bars P(#4). Bars Z(#4) are required for sloped overhangs with U-Beams.

(18) See appropriate thickened slab end details for reinforcing and limits of thickened slab end.

TABLE OF REINFORCING STEEL (12)

BAR	SIZE	Max Spa (in.)
D	#5	9
E	#5	6
P	#4	18
UP	#4	~
Z	#4	18

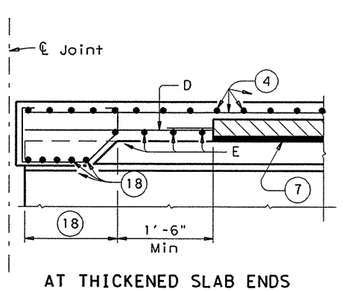

AT THICKENED SLAB ENDS FOR PRESTR CONC U-BMS

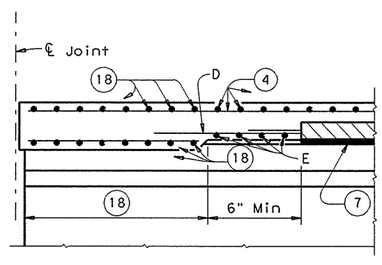

AT THICKENED SLAB ENDS FOR PRESTR CONC I-BMS AND STEEL BMS

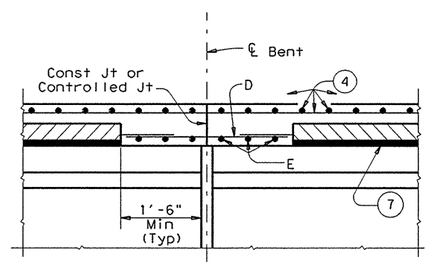

AT SLAB CONTINUOUS OVER CONVENTIONAL INTERIOR BENTS FOR ALL SIMPLE SPAN BMS

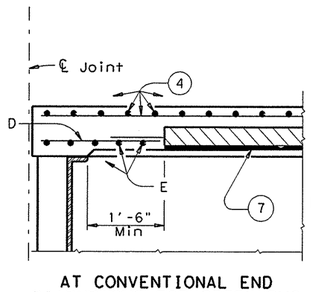

AT CONVENTIONAL END DIAPHRAGMS FOR STEEL BMS

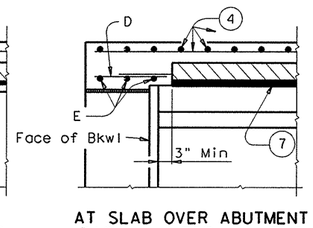

AT SLAB OVER ABUTMENT BACKWALL FOR ALL BMS

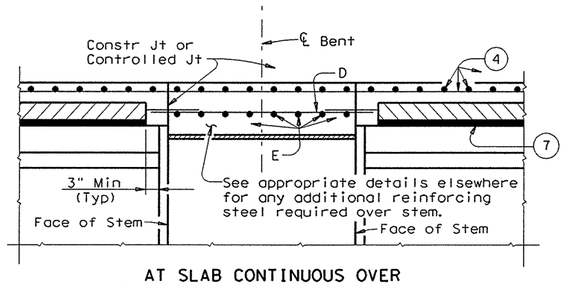

AT SLAB CONTINUOUS OVER INVERTED-T BENTS FOR ALL BMS

OPTION 1 ~ ELEVATIONS AT BEAM ENDS

HL93 LOADING

SHEET 3 OF 4

Texas Department of Transportation
Bridge Division

PRESTRESSED CONCRETE PANELS
OPTIONAL DECK DETAILS

PCP

FILE: pcpstdel.dgn	DN: TxDOT	CK: TxDOT	DW: JTR	CK: JMH
© TxDOT April 2006	DISTRICT	FEDERAL AID PROJECT		SHEET
REVISIONS 08-07: Added I-Girders & added note to WWR splice detail. 10-10: Added Option 2 & referenced PCP-FAB.	AUSTIN			525
	COUNTY	CONTROL	SECT	JOB	HIGHWAY
	WILLIAMSON	0683	06	027	SH 45 LOOP 1

DISCLAIMER:
The use of this standard is governed by the "Texas Engineering Practice Act". No warranty of any kind is made by TxDOT for any purpose whatsoever. TxDOT assumes no responsibility for the conversion of this standard to other formats or for incorrect results or damages resulting from its use.

PATH:

LEVELS DISPLAYED

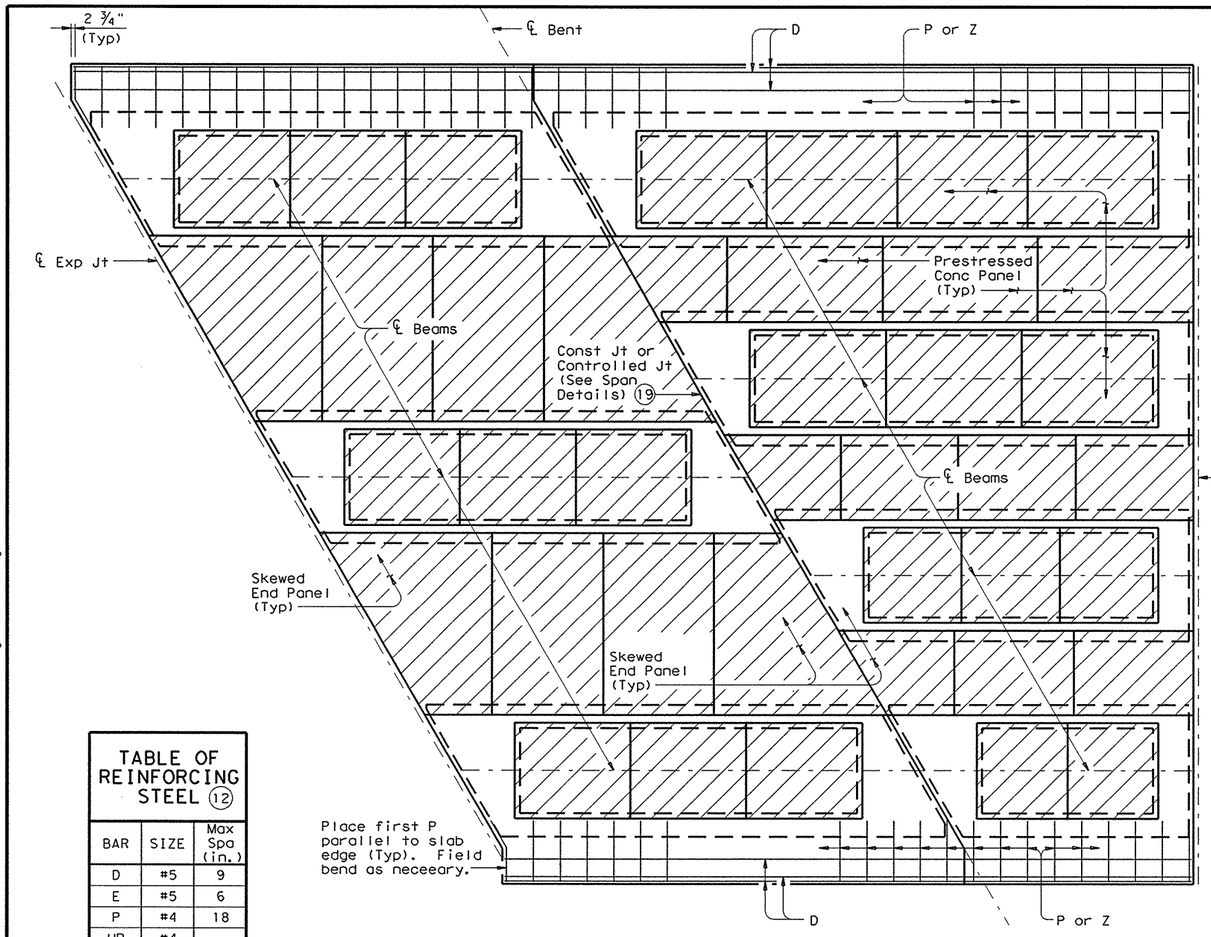

OPTION 2 ~ PLAN OF SLAB

(Showing U-Beams; other beams similar)

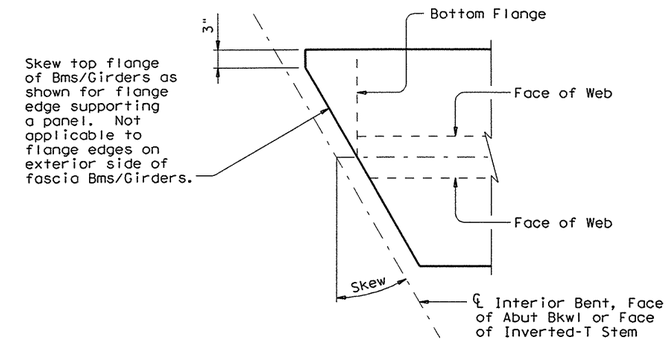

OPTION 2 ~ SHOWING MODIFICATION TO BEAM/GIRDER TOP FLANGE FOR SKEWS OVER 5°

Showing I-Bm/I-Girder, U-Bms and Steel Bms similar.

TABLE OF REINFORCING STEEL (12)		
BAR	SIZE	Max Spa (in.)
D	#5	9
E	#5	6
P	#4	18
UP	#4	~
Z	#4	18

(4) See Span Details for top slab reinforcement and clear cover. Longitudinal top slab reinforcement may rest on top of prestressed concrete panels if necessary to maintain clear cover.

(12) Max Spacing as listed unless otherwise shown.

(19) Top Plastic Joint Former at Controlled Joints (Stress Cap, Zip Strip, Stress Lock, etc.) is not required with these Details.

(20) End panel may be set up to 2" lower to accommodate expansion joint hardware, provided bedding strip is not less than 1/2" thick.

(21) 0" Min, 3/4" Max, support as necessary.

(22) Place panel within 1/2" of 3/4" thick board.

(28) 3/4" thick board, leave in place. Place straight, within 1/4" of Centerline of Bent, across bridge width and end board at exterior flange edge of fascia beams/girders. Do not extend into overhang.

(29) Permanent galvanized steel sheet form. Removable formwork is acceptable.

(30) Place end panel within 1/2" of expansion joint opening. End panel cannot encroach on required expansion joint opening.

(31) Additional (#4) bar 5'-0" in length must be placed under slab bars A and between every slab bars T. Center (#4) bar on Joint.

SPECIAL OPTION 2 CONSTRUCTION NOTES:

Placing panels adjacent to expansion joints and bent centerlines prior to completing interior panel placement is recommended. Saw cutting panels to fit is acceptable when approved by the Engineer. Minimum distance from a saw cut edge to a panel strand is 1 1/2".

Do not extend the longitudinal panel reinforcement into the cast-in-place slab.

Top flanges of beams and girders on skewed bridges must be modified as shown on this drawing. The Contractor is responsible for coordinating this modification with the beam fabricator prior to submitting shop drawings for approval.

Bending of anchor studs of expansion joints shown on standards AJ, SEJ-A and SEJ-S(O) is permissible if necessary to clear top of end panels. The Contractor is responsible for coordinating modifications with the joint fabricator. Submit shop drawings for approval when modifications to expansion joint hardware are made. These details are not applicable for bridges with expansion joints as shown on standard SEJ-P.

Bedding strips under skewed end panels must conform to the requirements of Item 425 except their minimum compressive strength must be 60 psi.

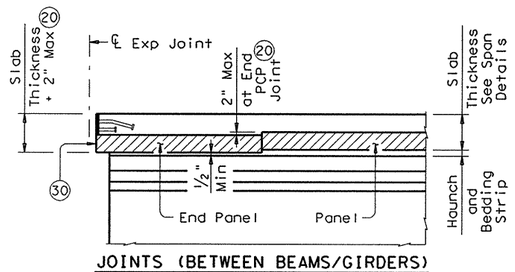

JOINTS (BETWEEN BEAMS/GIRDERS)

For SEJ-A, SEJ-S(O), AJ and Type A Expansion Joints only.

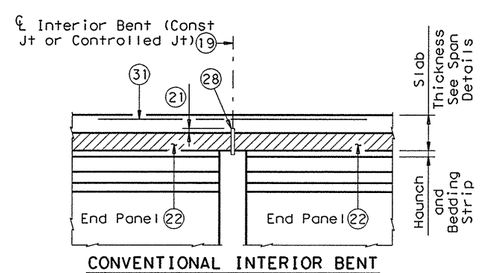

CONVENTIONAL INTERIOR BENT

Panel against Panel between Bms/Girders.

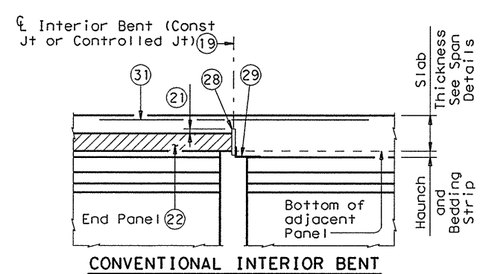

CONVENTIONAL INTERIOR BENT

Panel against Bm/Girder End in Adacent Span.

OPTION 2 ~ ELEVATIONS AT BEAM ENDS (4)

HL93 LOADING

SHEET 4 OF 4

Texas Department of Transportation
Bridge Division

PRESTRESSED CONCRETE PANELS
OPTIONAL DECK DETAILS

PCP

FILE: pcpstdel.dgn	DN: TxDOT	CK: TxDOT	DW: JTR	CK: JMH
© TxDOT April 2006	DISTRICT	FEDERAL AID PROJECT		SHEET
REVISIONS 08-07: Added I-Girders & added note to WWR splice detail. 10-10: Added Option 2 & referenced PCP-FAB.	AUSTIN			526
	COUNTY	CONTROL	SECT	JOB	HIGHWAY
	WILLIAMSON	0683	06	027	SH 45 LOOP 1

DISCLAIMER:
The use of this standard is governed by the "Texas Engineering Practice Act". No warranty of any kind is made by TxDOT for any purpose whatsoever. TxDOT assumes no responsibility for the conversion of this standard to other formats or for incorrect results or damages resulting from its use.

PATH:

LEVELS DISPLAYED

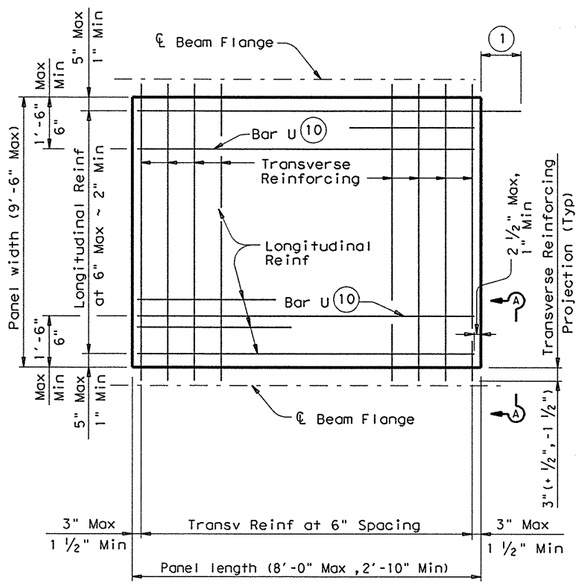

TYPICAL NON-SKEWED PANEL PLAN

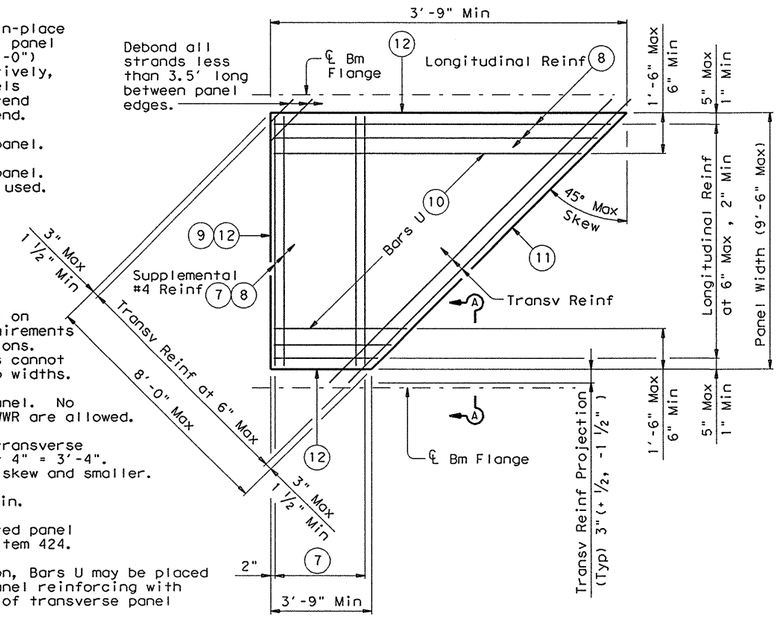

TYPICAL SKEWED END PANEL PLAN

(Only to be used with details shown elsewhere in the plans.)

1. At connection with cast-in-place slab, extend longitudinal panel reinforcement 1'-0" (+2", -0") past panel end. Alternatively, provide (#3) x 2'-0" dowels at 6" Max Spacing and extend dowels 1'-0" past panel end.
2. Four loops required per panel.
3. Four loops required per panel. ⅜" or ½" strands may be used.
4. Normal dimensions must be used on spans with parallel beams. Maximum and Minimum dimensions apply only to spans with flared beams.
5. See Normal Grading Detail on PCP standard for lap requirements and bedding strip dimensions. Some laps shown in tables cannot utilize all bedding strip widths.
6. One Splice allowed per panel. No more than two sheets of WWR are allowed.
7. Provide (#4) bars under transverse reinforcing, 10 Spaces at 4" = 3'-4". Omit for 5 degree (1:12) skew and smaller.
8. End Cover 2 ½" Max, 1" Min.
9. Recess strands on indicated panel edge in accordance with Item 424.
10. At the fabricator's option, Bars U may be placed parallel to transverse panel reinforcing with horizontal legs in plane of transverse panel reinforcing.
11. Use length of indicated panel edge as panel width for purpose of determining type of transverse reinforcing.
12. Timber form work permissible this edge.

TABLE A (4) (5)			
Beam Type	Normal (In.)	Min (In.)	Max (In.)
A	3	2 ½	3 ½
B	3	2 ½	3 ½
C	4	3	4 ½
IV	6	4	7 ½
VI	6 ½	4 ½	8 ½
U40	5 ½	5 ½	7
U54	5 ½	5 ½	7
Tx28-70	6	4	7 ½
XB20	4	3	4 ½
XB28	4	3	4 ½
XB34	4	3	4 ½
XB40	4	3	4 ½
XSB12	4	3	4 ½
XSB15	4	3	4 ½

TABLE B (4) (5)			
Top Flange Width	Normal (In.)	Min (In.)	Max (In.)
11" to 12"	2 ¾	2 ½	2 ¾
Over 12" to 15"	3 ¼	3	3 ¼
Over 15" to 18"	4	3	4 ¾
Over 18"	5	3 ½	6 ¼

GENERAL NOTES:

All concrete for panels is to be Class H. Use Class H (HPC) concrete for panels if required elsewhere in plans. Release strength f'ci=4000 psi. Minimum 28 day strength f'c=5000 psi.

Remove laitance from top panel surface.

Finish top of panel to a roughness between a No.6 and No.9 concrete surface profile, inclusive, as specified by the International Concrete Repair Institute (ICRI).

Shop drawings for the fabrication of panels will not require the Engineer's approval if fabrication is in accordance with the details shown on this standard.

A panel layout which identifies location of each panel must be developed by the fabricator. Permanently mark each panel in accordance with the panel layout. A copy of the layout is to be provided to the Engineer.

TRANSVERSE PANEL REINFORCEMENT:

For panel widths over 5', use ⅜" or ½" Dia (270k) prestressing strands with a tension of 16.1 kips per strand.

For panel widths over 3'-6" up to and including 5', use ⅜" or ½" Dia (270k) prestressing strands with a tension of 16.1 kip per strand. Optionally, #4 Grade 60 reinforcing bars may be used in lieu of prestressed strands.

For panel widths up to 3'-6", use #4 Grade 60 reinforcing bars (prestressed strands are not allowed).

Place transverse panel reinforcement at panel centroid and space at 6" Max.

LONGITUDINAL PANEL REINFORCEMENT:

Any of the following options may be used for longitudinal panel reinforcement:

1. (#3) Grade 60 reinforcing steel at 6" Max Spacing. No splices allowed.
2. ⅜" Dia prestressing strands at 4 ½" Max Spacing (unstressed). No splices allowed.
3. ½" Dia prestressing strands at 6" Max Spacing (unstressed). No splices allowed.
4. Deformed Welded Wire Reinforcement (WWR) (ASTM A497) providing 0.22 sq in per foot of panel width. Wires larger than D11 not permitted. Provide transverse wires to ensure proper handling of reinforcing. One splice per panel is allowed. See WWR Splice Detail.

No combination of longitudinal reinforcement options in a panel is allowed.

Place longitudinal panel reinforcement above or below transverse panel reinforcement. Must be placed above transverse panel reinforcement for skewed end panels with supplemental #4 reinforcement.

HL93 LOADING

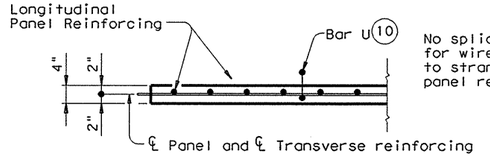

SECTION A-A

(Not Showing supplemental #4 bars for Skewed End Panels.)

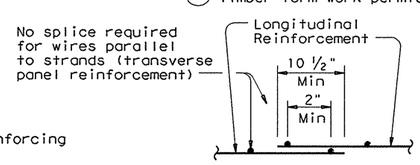

WELDED WIRE REINFORCEMENT (WWR) SPLICE DETAIL (6)

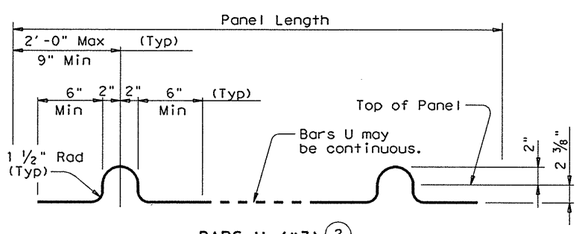

BARS U (#3) (2)

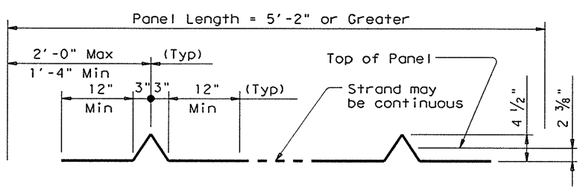

OPTIONAL STRAND FOR BARS U (3)

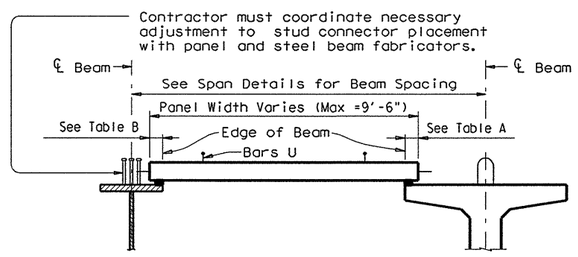

STEEL BEAMS

PRESTRESSED CONCRETE BEAMS OR GIRDERS

Typ unless noted otherwise

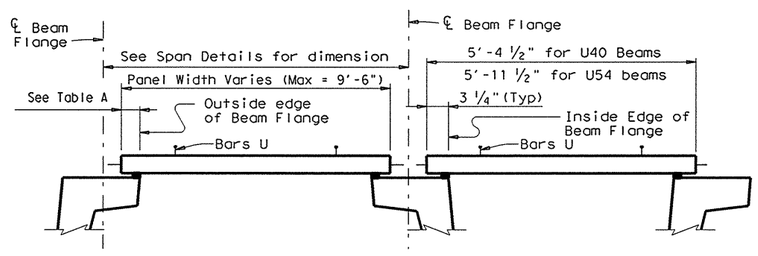

PRESTRESSED CONCRETE U-BEAMS

TYPICAL SECTIONS FOR DETERMINING PANEL WIDTH

DISCLAIMER:
The use of this standard is governed by the "Texas Engineering Practice Act". Any other use or application is forbidden. TxDOT assumes no responsibility for the conversion of this standard to other formats or for incorrect results or damages resulting from its use.

PATH:

LEVELS DISPL...

Texas Department of Transportation
Bridge Division

PRESTRESSED CONCRETE PANEL FABRICATION DETAILS

PCP-FAB

FILE: pcpstde2.dgn	DN: TxDOT	CK: TxDOT	DW: JTR	CK: JMH
©TxDOT October 2010	DISTRICT	FEDERAL AID PROJECT		SHEET
REVISIONS	AUSTIN			526A
	COUNTY	CONTROL	SECT	JOB	HIGHWAY
	WILLIAMSON	0683	06	027	IH 35 LOOP 1

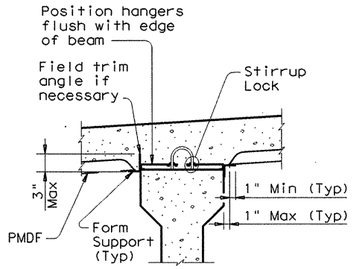

PRESTR CONC I-BEAMS AND I-GIRDERS WITH STIRRUP LOCKS

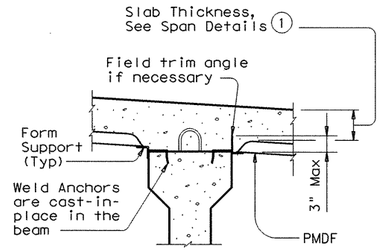

PRESTR CONC I-BEAMS AND I-GIRDERS WITH WELD ANCHORS

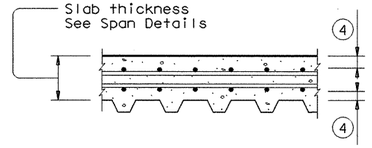

TYP LONGITUDINAL SLAB SECTION

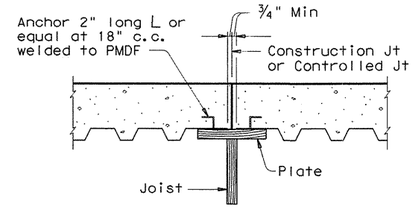

Note: In spans where PMD forms are used, timber forms must be used at construction joints. Adequate provision must be made to support edge of metal form and to provide anchorage of metal form to slab concrete where joined to wood forms.

SECTION THRU CONSTRUCTION JOINT

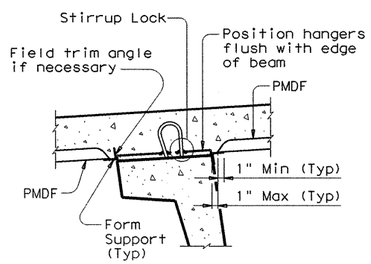

U-BEAMS WITH STIRRUP LOCKS

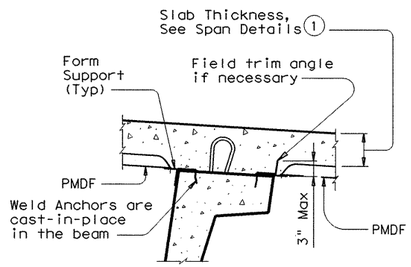

U-BEAMS WITH WELD ANCHORS

FOR PRESTR CONC U-BEAM BRIDGES:
Size, spacing, and orientation of bottom mat of slab reinforcement must match the top mat of reinforcing shown on the span details except all bottom mat bars are to be #5.

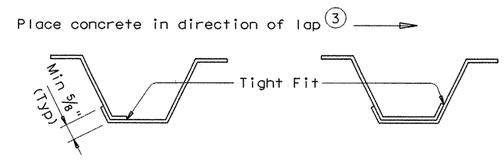

SIDE LAP DETAILS

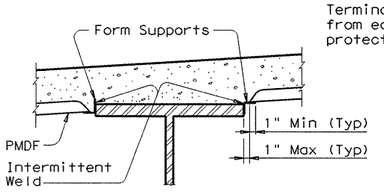

STEEL BEAMS AT COMPRESSION FLANGES

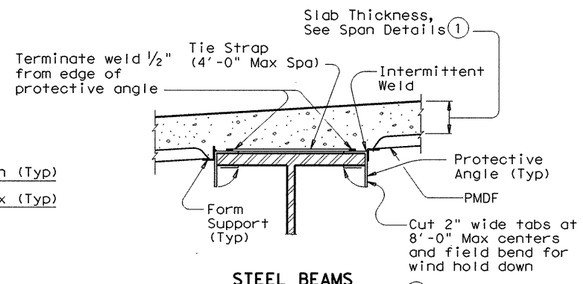

STEEL BEAMS AT TENSION FLANGES 2

TYPICAL TRANSVERSE SECTIONS

1 Slab thickness minus 5/8" if corrugations match reinforcing bars.

2 Welding of form supports to tension flanges will not be permitted.
Other methods of providing wind hold down resistance for PMDF in tension flange zones will be considered. At least one layer of sheet metal must be provided between the flange and the weld joint.

3 The direction of concrete placement will be such that the upper layer of the form overlap is loaded first.

4 See Span details for cover requirements.

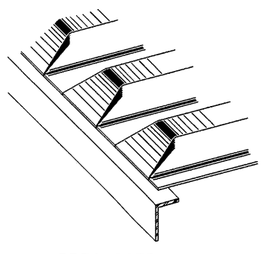

PRECLOSED

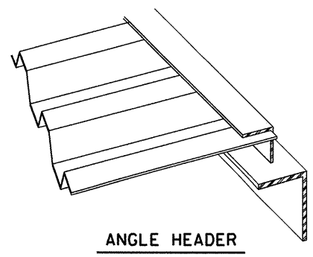

ANGLE HEADER

NOTE: This type is to be used for skewed ends only.

TYPES OF END CLOSURES

GENERAL NOTES:
Steel for Permanent Metal Deck Forms (PMDF) and support angles shall conform to ASTM A653, Structural Steel (SS), with coating designation G165. Steel must have a minimum yield strength of 33 ksi. Minimum thickness of PMDF is 20 gage and that of support angles and protective angles is 12 gage.
Submit two copies of forming plans for PMDF to the Engineer. These plans must show all essential details of proposed form sheets, closures, fasteners, supports, connectors, special conditions and size and location of welds. These plans must clearly show areas of tension flanges for steel beams and provisions for protecting the tension flanges from welding notch effects by inclusion of separating sheet metal or other positive method. These plans must be designed, signed, and sealed by a licensed professional engineer. Department approval of these plans is not required, but the Department reserves the right to require modifications to the plans. The Contractor is responsible for the adequacy of these plans.
The details and notes shown on this standard are to be used as a guide in preparation of the forming plans.
All material, labor, tools and incidentals necessary to form a bridge deck with Permanent Metal Deck Forms is considered subsidiary to Item 422, "Reinforced Concrete Slab".

DESIGN NOTES:
As a minimum, PMDF and support angles must be designed for the dead load of the form, reinforcement and concrete plus 50 psf for construction loads. Flexural stresses due to these design loads must not exceed 75 percent of the yield strength of the steel. Allowable stress for weld metal must be 12,400 psi.
Maximum deflection under the weight of forms, reinforcement and concrete or 120 psf, whichever is greater, shall not exceed the following:

1/180 of the form design span, but not more than 0.50", for design spans of 10' or less.

1/240 of the form design span, but not more than 0.75", for design spans greater than 10'.

The form design span must not be less than the clear distance between beam flanges, measured parallel to the form flutes, minus 2".

CONSTRUCTION NOTES:
Form sheets must not be permitted to rest directly on the top of beam flanges. Form sheets must be securely fastened to form supports and must have a minimum bearing length of one inch at each end. Form supports must be placed in direct contact with beam flanges.
All attachments must be made by permissible welds, screws, bolts, clips or other means shown on the the forming plans. All sheet metal assembly screws must be installed with torque-limiting devices to prevent stripping. Only welds or bolts must be used to support vertical loads.
Welding and welds must be in accordance with the provisions of Item 448, "Structural Field Welding", pertaining to fillet welds. All welds must be made by a qualified welder in accordance with Item 448.
All permanently exposed form metal, where the galvanized coating has been damaged, must be thoroughly cleaned and repaired in accordance with Item 445, "Galvanizing". Minor heat discoloration in areas of welds need not be touched up.
Flutes must line up uniformly across the entire width of the structure where main reinforcing steel is located in the flute.
Construction joints will not be permitted unless shown on the plans. The location of and forming details for any construction joint used must be shown on the forming plans. Forms below a construction joint must be removed after curing of the slab.
A sequence for uniform vibration of concrete must be approved by the Engineer prior to concrete placement. Attention must be given to prevent damage to the forms, yet provide proper vibration to prevent voids or honeycomb in the flutes and at headers and/or construction joints.

DISCLAIMER:
The use of this standard is governed by the "Texas Engineering Practice Act". No warranty of any kind is made by TxDOT for any purpose whatsoever. TxDOT assumes no responsibility for the conversion of this standard to other formats or for incorrect results or damages resulting from its use.

PATH:
LEVELS DISPLAYED

SHEET 1 OF 2

Texas Department of Transportation
Bridge Division

PERMANENT METAL DECK FORMS

PMDF

FILE: pmdfstel.dgn	DN: TxDOT	CK: TxDOT	DW: TxDOT	CK: TxDOT
©TxDOT April 2006	DISTRICT	FEDERAL AID PROJECT		SHEET
REVISIONS 08-2007: Added I-Girders.	AUSTIN			527
	COUNTY		CONTROL-SECT-JOB	HIGHWAY
	WILLIAMSON		0683-06-027	SH 45 LOOP 1

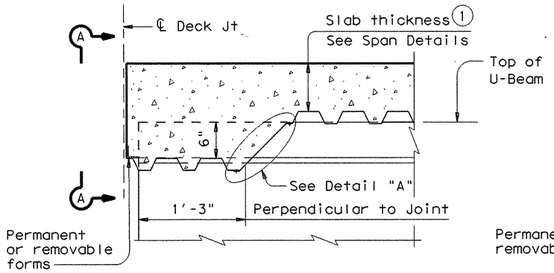

AT THICKENED SLAB END FOR U-BEAMS

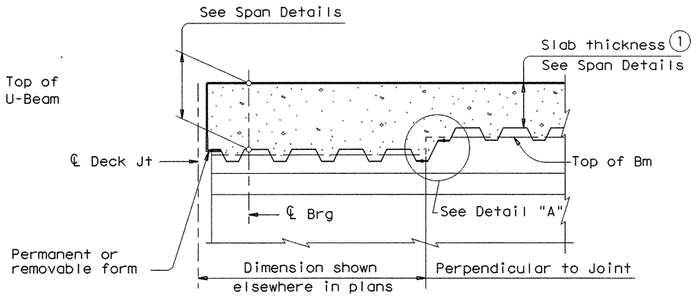

AT THICKENED SLAB END FOR PRESTRESSED I-BEAMS, I-GIRDERS AND STEEL BEAMS

Showing I-Beam block-out.
No block-out for I-Girders or Steel Beams.

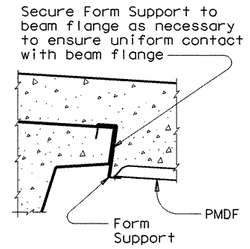

SECTION A-A

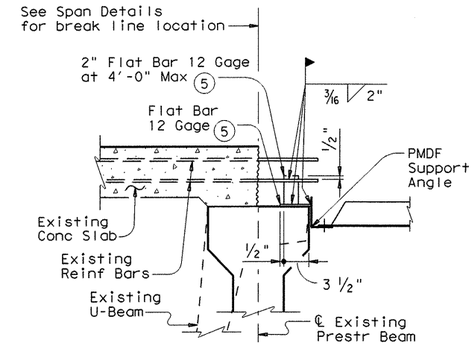

SHOWING PRESTRESSED CONCRETE I-BEAMS, I-GIRDERS AND U-BEAMS

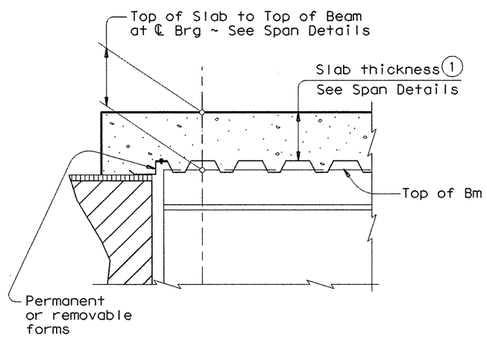

AT SLAB OVER ABUT BKWL OR INV TEE STEM FOR CONC BEAMS WITHOUT THICKENED SLAB END

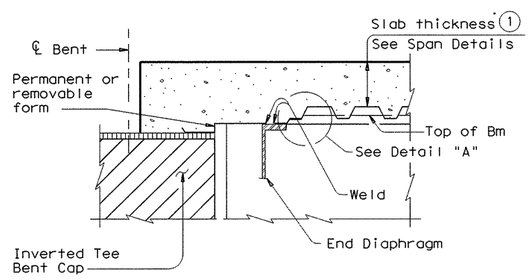

AT SLAB OVER INV TEE STEM FOR STEEL BEAMS WITHOUT THICKENED SLAB END

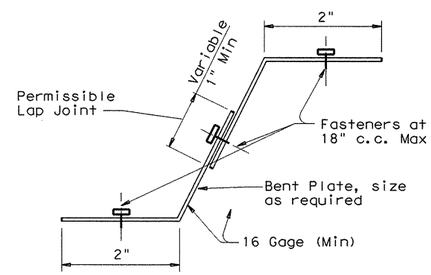

DETAIL "A"

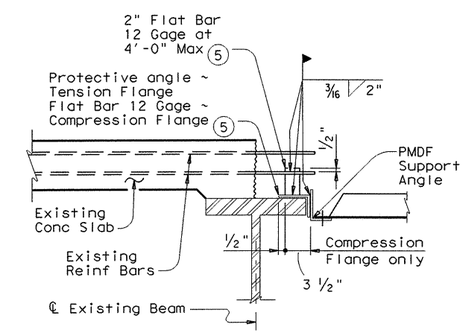

SHOWING STEEL BEAMS

WIDENING DETAILS

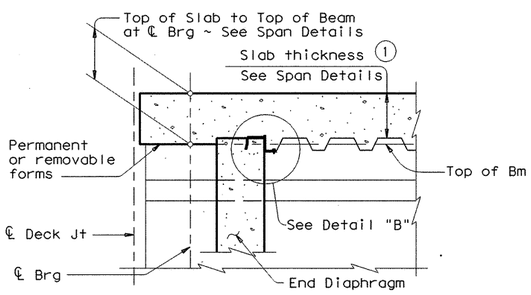

AT CONC END DIAPHRAGM FOR PRESTRESSED I-BEAMS AND STEEL BEAMS

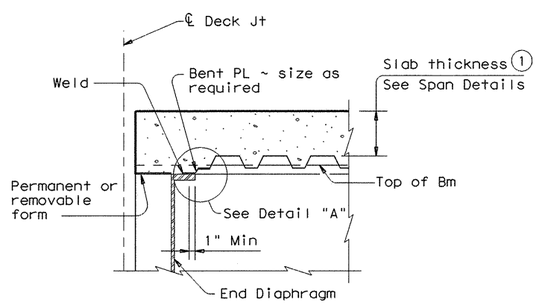

AT END DIAPHRAGM FOR STEEL BEAMS WITHOUT THICKENED SLAB END

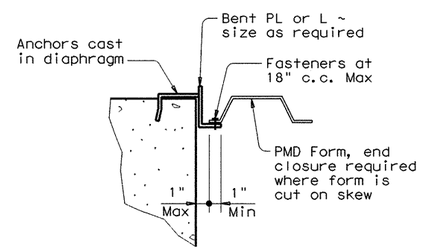

DETAIL "B"

(1) Slab thickness minus 5/8" if corrugations match reinforcing bars

(5) Minimum yield stress of 12 Gage bars shall be 40 ksi

DETAILS AT ENDS OF BEAMS

SHEET 2 OF 2

Texas Department of Transportation
Bridge Division

PERMANENT METAL DECK FORMS

PMDF

FILE: pmdfstel.dgn	DN: TxDOT	CK: TxDOT	DW: TxDOT	CK: TxDOT
© TxDOT April 2006	DISTRICT	FEDERAL AID PROJECT		SHEET
REVISIONS 08-2007: Added I-Girders.	AUSTIN			528
	COUNTY		CONTROL-SECT-JOB	HIGHWAY
	WILLIAMSON		0683-06-027	IH 35 LOOP 1

DISCLAIMER:
The use of this standard is governed by the "Texas Engineering Practice Act". No warranty of any kind is made by TxDOT for any purpose whatsoever. TxDOT assumes no responsibility for the conversion of this standard to other formats or for incorrect results or damages resulting from its use.

PATH:
LEVELS DISPLAYED

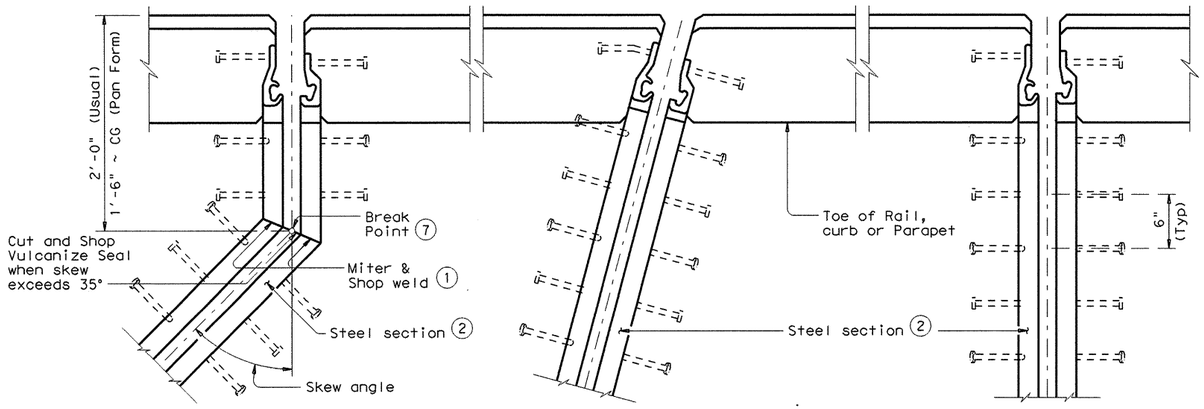

SHOWING SKEWS WITH SLAB BREAKBACKS

SHOWING SKEWS WITHOUT SLAB BREAKBACKS

SHOWING WITHOUT SKEWS AND SLAB BREAKBACKS

PLANS OF END CONDITIONS

SHOWN WITH UPTURNS

TABLE OF SEALED EXPANSION JOINT INFORMATION

MANUFACTURER	STEEL SECTION (2)	NEOPRENE STRIP SEAL			
		4" JOINT		5" JOINT	
		Seal Type	Joint Opening (3)	Seal Type	Joint Opening (3)
D.S. Brown	Type SSCM2	A2R-400	1 ¾"	A2R-XTRA	2"
Watson Bowmon Acme	Type R	SE-400	1 ¾"	SE-500	2"

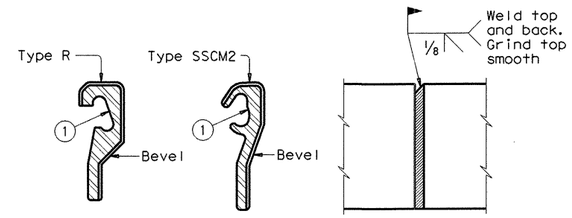

WELD LIMITS WELD LIMITS REAR VIEW

BEVEL AT FIELD SPLICE

Weld preparation shall be done by shop

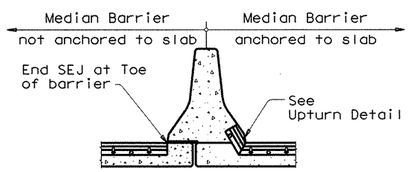

WITH OPEN DECK JT BELOW MEDIAN BARRIER

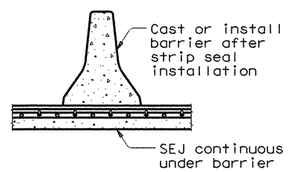

AT MEDIAN BARRIER

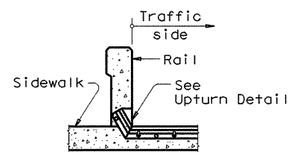

AT SIDEWALK BEHIND BRIDGE RAIL

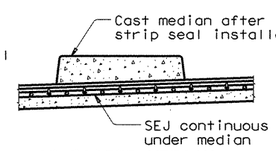

AT RAISED MEDIAN

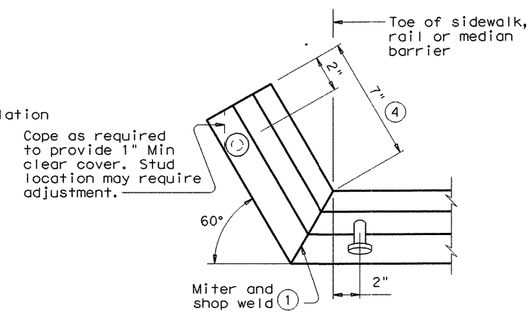

UPTURN DETAIL

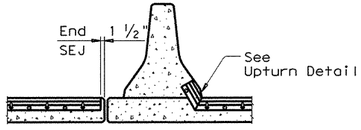

WITH OPEN DECK JT ADJACENT TO MEDIAN BARRIER

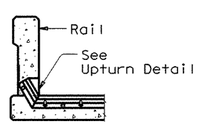

AT CONCRETE BRIDGE RAIL

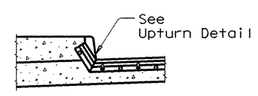

AT SIDEWALK

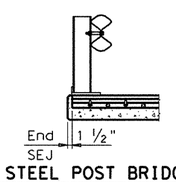

AT STEEL POST BRIDGE RAIL

TYPICAL SECTIONS (5)

1. Remove all burrs which will be in contact with seal prior to making splice.
2. Shape of steel section shown is typical. Variations in sections must be approved by the Engineer.
3. These openings are also the recommended minimum installation openings.
4. Reduce for sidewalk or parapet heights less than 6".
5. Other conditions affecting the joint profile should be noted elsewhere.
6. Transverse bars in conflict with SEJ studs in either the bridge slab or approach slab shall be moved to rest at the junction of the studs.
7. See Span details for location of break point.

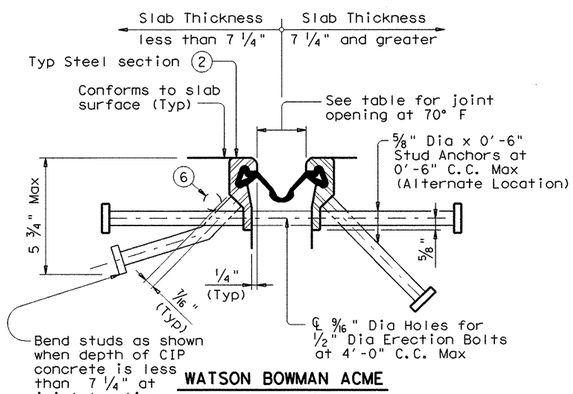

WATSON BOWMAN ACME

Type R

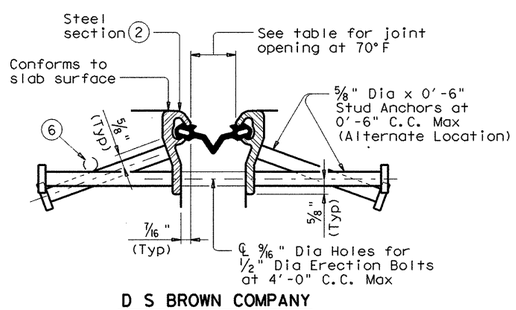

D S BROWN COMPANY

Type SSCM2

SECTIONS THRU SEALED EXPANSION JOINT

FABRICATION NOTES:

Corresponding sections of Sealed Exp Jts shall be temporarily shop assembled, checked for fit, and match marked for shipment.

Erection holes shall be punched so as to line up when Sealed Exp Jts are in their final position.

Weld studs in accordance with AWS D1.1.

The neoprene seal shall be continuous and included in the price bid for Sealed Exp Jt.

Steel sections shall be shipped in convenient lengths of 24'-0" Max and 10'-0" Min unless otherwise necessary for stage construction or widenings. One shop splice will be permitted in each shipping length provided no piece is less than 2'-0" in length and sufficient studs are added to limit the stud to shop or field splice distance to 2" Min and 4" Max.

Shop and field splices shall be made by butt welding with areas in contact with seal to be ground smooth.

Paint portions of steel sections not in contact with concrete with the primer specified for System II paint.

Shop drawings for the fabrication of Sealed Expansion Joints will not require the Engineer's approval if fabrication is in accordance with the details shown on this standard.

An SEJ Layout which identifies location of each steel section shall be developed. Permanently mark each steel section in accordance with the SEJ Layout.

CONSTRUCTION NOTES:

The Contractor shall arrange for securing the Sealed Exp Jt in position, and placing to the proper grade and alignment by welding braces to adjacent reinf steel, to prestressed beam stirrups, or to anchors cast in concrete diaphragms. Cost of temporary bracing is to be included in the price bid for Sealed Exp Jt.

After bracing and welding the steel section, remove the erection bolts and spacers and seal erection holes before placing concrete.

Seal cavity shall be cleaned and prepared for seal installation as per the manufacturer's suggested installation procedures.

GENERAL NOTES:

Sealed Exp Jts shall be provided in the size and at locations shown on plans.

Minimum slab and overhang thickness required for the use of SEJ-A is 6 1/2".

DISCLAIMER:
The use of this standard is governed by the "Texas Engineering Practice Act". No warranty of any kind is made by TxDOT for any purpose whatsoever. TxDOT assumes no responsibility for the conversion of this standard to other formats or for incorrect results or damages resulting from its use.

PATH:

LEVELS DISPLAYED

Texas Department of Transportation
Bridge Division

SEALED EXPANSION JOINT TYPE A WITHOUT OVERLAY

SEJ-A

FILE: sejastel.dgn	DN: TxDOT	CK: TxDOT	DW: TxDOT	CK: TxDOT
©TxDOT April 2006	DISTRICT	FEDERAL AID PROJECT		SHEET
REVISIONS	AUSTIN			529
	COUNTY		CONTROL-SECT-JOB	HIGHWAY
	WILLIAMSON		0683-06-027	SH 45 LOOP 1

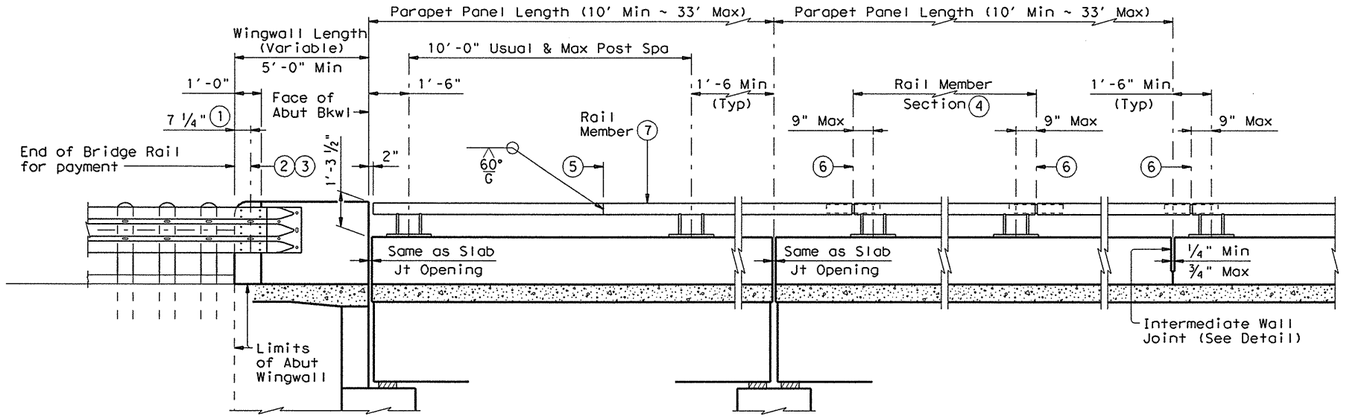

ROADWAY ELEVATION OF RAIL

(Rail Member showing Elliptical Tube Option, Rectangular Tube Option similar).

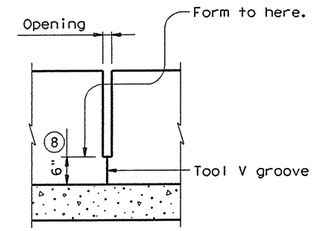

INTERMEDIATE WALL JOINT DETAIL

Provide at all interior bents without slab expansion joints. Space equally in between at 33' Max, 10' Min. Location independent of rail member splices.

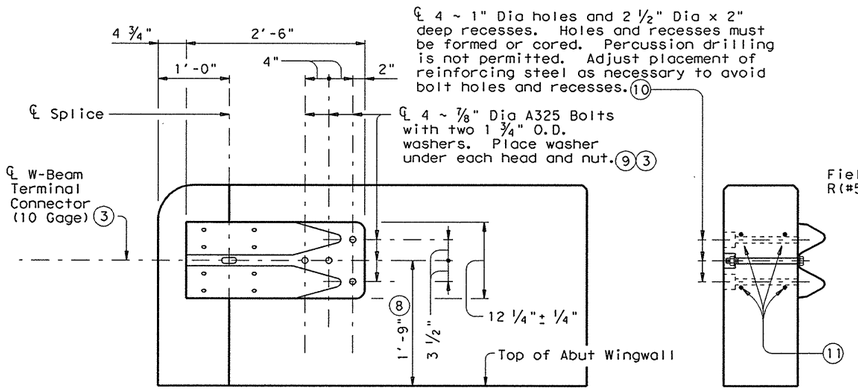

TL-2 TERMINAL CONNECTION DETAILS

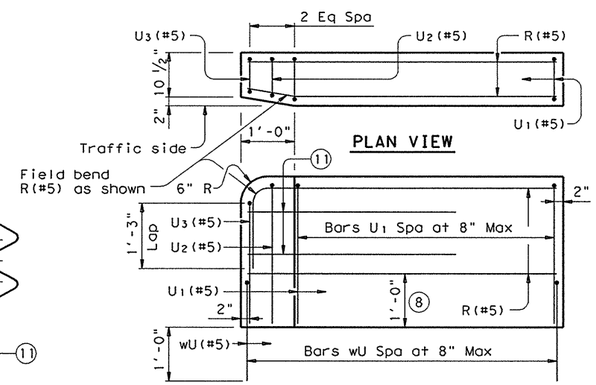

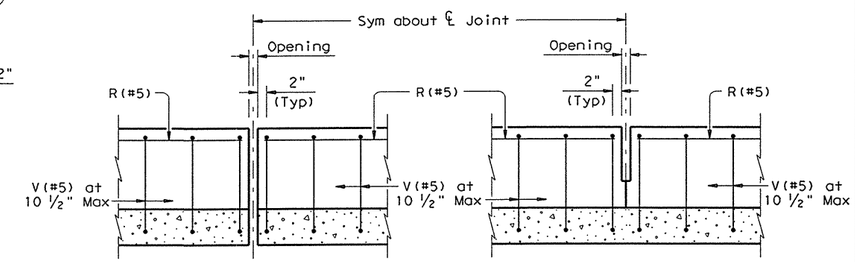

ELEVATION SHOWING TYPICAL REINFORCING PLACEMENT

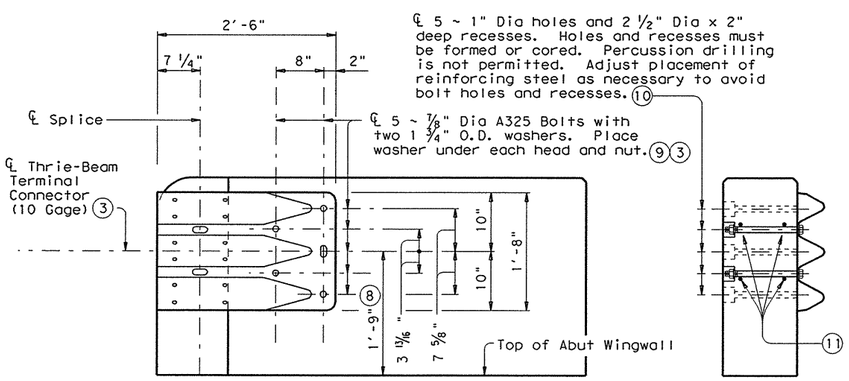

TL-3 TERMINAL CONNECTION DETAILS

1. Showing TL-3 Splice location, TL-2 Splice location is 1'-0".
2. ℄ Splice ~ Metal Beam Guard Fence Transitions must be attached to the bridge rail and extended along the embankment unless otherwise shown in the plans.
3. Terminal Connectors and associated hardware are to be paid for under the Item "Metal Beam Guard Fence".
4. Rail member sections must have at least two posts but not more than four.
5. One shop splice per rail member section is permitted with minimum 85 percent penetration. The weld may be square groove or single vee groove. Grind smooth.
6. ℄ Exp Jt or Splice Jt as required.
7. Unless directed otherwise by the Engineer, the fabricator may use the rectangular tube in lieu of the elliptical tube for the rail member.
8. Increase 2" for structures with overlay.
9. Bolts must be of sufficient length to extend 1/2" to 3/4" beyond nut.
10. Bolt recesses are only required when pedestrian sidewalks are adjacent to back of rail.
11. 4 additional Bars R(#5) 3'-8" in length must be placed inside Bars U(#5) and centered 2'-0" from end of rail when Terminal Connections are required. Field bend as needed.

DISCLAIMER:
The use of this standard is governed by the "Texas Engineering Practice Act". No warranty of any kind is made by TxDOT for any purpose whatsoever. TxDOT assumes no responsibility for the conversion of this standard to other formats or for incorrect results or damages resulting from its use.

ACC:
LEVELS 01 ... 60
1

SHEET 1 OF 3

Texas Department of Transportation
Bridge Division

TRAFFIC RAIL

TYPE T401

FILE: rlstd006.dgn	DN: TxDOT	CK: TxDOT	DW: JTR	CK: JMH
©TxDOT April 2009	DISTRICT	FEDERAL AID PROJECT		SHEET
REVISIONS	AUSTIN			530
05-11: Notes and Wall Joint Note.	COUNTY	CONTROL	SECT	JOB	HIGHWAY
	WILLIAMSON	0683	06	027	SH 45 LOOP 1

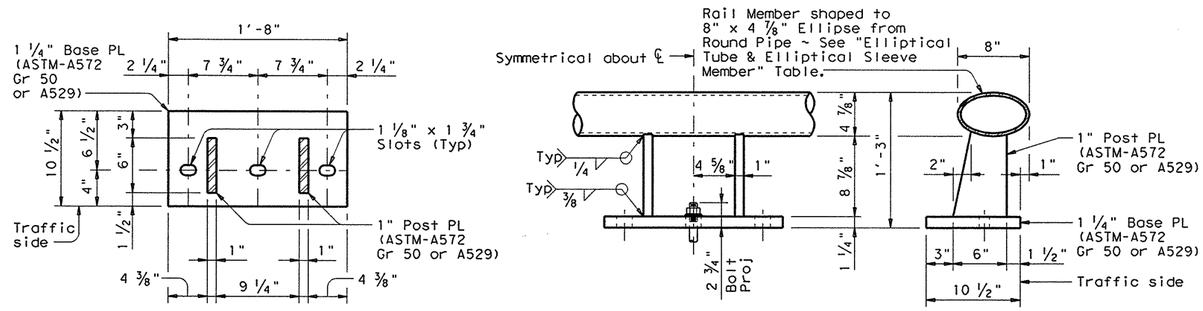

SECTION THRU POST

ELEVATION

SECTION THRU RAIL

ELLIPTICAL TUBE WITH RAIL POST & ANCHORAGE DETAILS

(Showing Elliptical Tube Option)

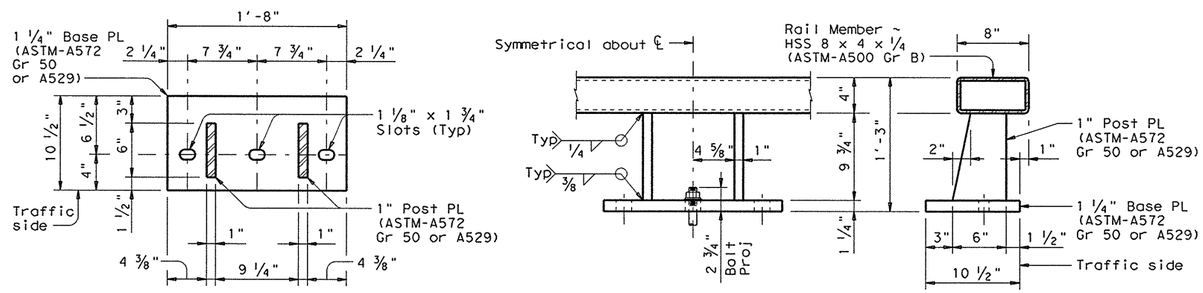

SECTION THRU POST

ELEVATION

SECTION THRU RAIL

RECTANGULAR TUBE WITH RAIL POST & ANCHORAGE DETAILS ⑦

(Showing Rectangular Tube Option)

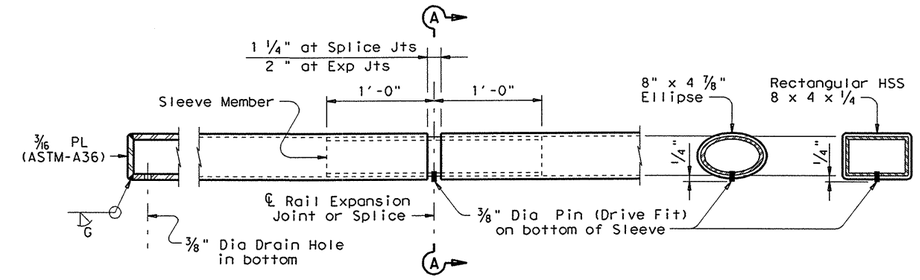

AT RAIL ENDS

AT SPLICE OR EXP JTS

SECTION A-A (Showing Ellipse Tube Option)

SECTION A-A (Showing Rectangular Tube Option)

TUBE FABRICATION DETAILS ⑦

ELLIPTICAL TUBE & ELLIPTICAL SLEEVE MEMBER		
8" x 4 ⅞" Ellipse	Elliptical Sleeve Member	
Material	Material	Thickness
6" Dia Std Pipe ASTM-A53 E or S Gr B)	ASTM-A53 Gr B	0.353"
	A36 or A500 Gr B	0.339"
	API-5LX52	0.224"
6 ⅝" O.D. Pipe x 0.188" API-5LX52	ASTM-A53 Gr B	0.339"
	A36 or A500 Gr B	0.325"
	API-5LX52	0.188"

Notes: Other sections of equal or greater strength are acceptable for elliptical sleeves. The major and minor diameters of the rail member may vary +/- 0.1875" from plan dimension. However, the difference between the outside diameters of the elliptical sleeve and the inside diameters of the rail member must not exceed 0.25 inches.

⑦ Unless directed otherwise by the Engineer, the fabricator may use the rectangular tube in lieu of the elliptical tube for the rail member.

⑧ Increase 2" for structures with overlay.

⑫ 5 ½" when vertical reinforcing has closer clear cover over horizontal reinforcing in abutment wingwalls or retaining walls on traffic side of wall.

⑬ See "Material Notes" for anchor bolt information.

⑭ Top longitudinal slab bar may be adjusted laterally 3" plus or minus to tie reinforcing.

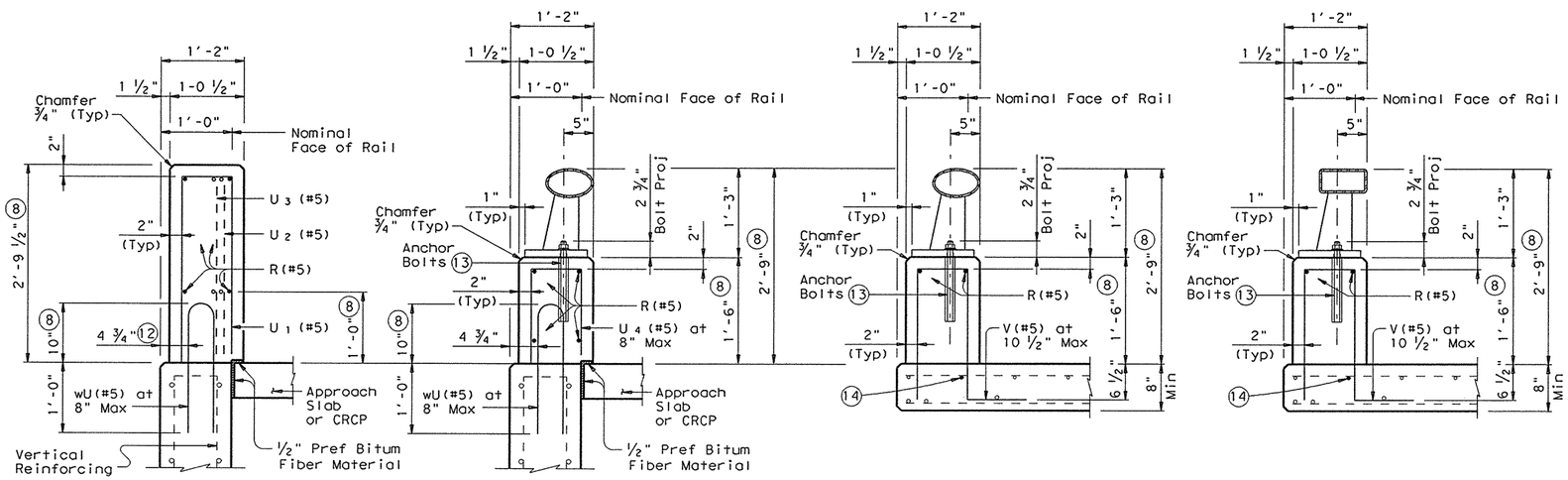

ON ABUTMENT WINGWALLS OR CIP RETAINING WALLS

ON CIP RETAINING WALLS (Showing Elliptical Tube Option)

ON BRIDGE SLAB (Showing Elliptical Tube Option)

ON BRIDGE SLAB (Showing Rectangular Tube Option)

SECTIONS THRU RAIL ⑦

SHEET 2 OF 3

Texas Department of Transportation
Bridge Division

TRAFFIC RAIL

TYPE T401

FILE: rlstd006.dgn	DN: TxDOT	CK: TxDOT	DW: JTR	CK: JMH	
© TxDOT April 2009	DISTRICT	FEDERAL AID PROJECT			SHEET
REVISIONS	AUSTIN				531
05-11: Notes and Wall Joint Note.	COUNTY		CONTROL	SECT	JOB	HIGHWAY
	WILLIAMSON		0683	06	027	SH 45 LOOP 1

DISCLAIMER:
The use of this standard is governed by the "Texas Engineering Practice Act". No warranty of any purpose whatsoever. TxDOT assumes no responsibility for the conversion of this standard to other formats or for incorrect results or damages resulting from its use.

ACC:

LEVELS DISPLAYED

DISCLAIMER:
The use of this standard is governed by the "Texas Engineering Practice Act". No warranty of any kind is made by TxDOT for any purpose whatsoever. TxDOT assumes no responsibility for the conversion of this standard to other formats or for incorrect results or damages resulting from its use.

⑧ Increase 2" for structures with overlay.

⑬ See "Material Notes" for anchor bolt information.

⑮ Slots are not allowed in areas where there is a joint in the concrete parapet between rail post.

⑯ Length shown for 6 ½" Min bar embedment with no overlay. Adjust as required.

⑰ Shop drawings for approval required for tubular steel sections.

RAIL DATA FOR HORIZONTAL CURVES

	RADIUS TO FACE OF RAIL	MAX CHORD LENGTH	CONSTRUCT OR FABRICATE
Rail Members	Over 2800'	29'-0"	Straight rail sections
	Over 1400' thru 2800'	14'-6"	To required radius or to chords shown ⑰
	Over 700' thru 1400'	7'-3"	
	Thru 700'	Zero	To required radius ⑰

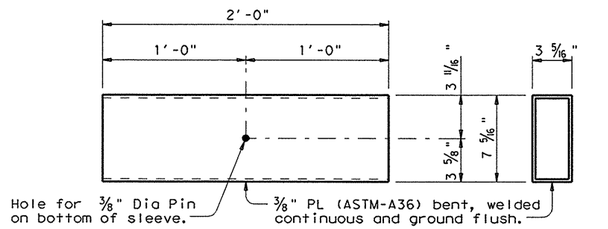

RECTANGULAR TUBE SLEEVE MEMBER DETAIL

(See Tube Fabrication Detail)

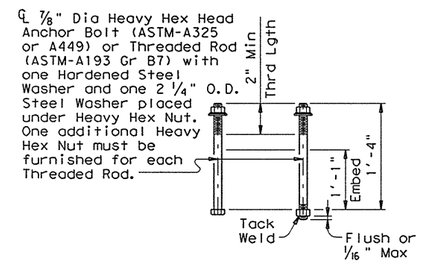

CAST-IN-PLACE ⑬ ANCHOR BOLT OPTIONS

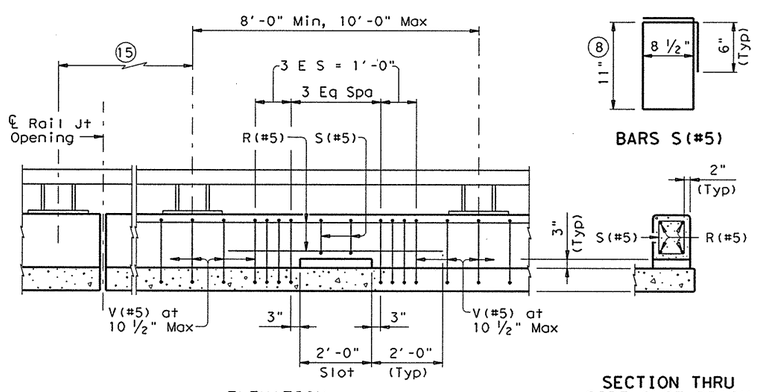

OPTIONAL SIDE SLOT DRAIN DETAILS

Note: Side Slot Drains must be centered between rail posts within the limits shown. Side Slot Drains may be used where shown elsewhere on the plans or as directed by the Engineer. Drains should not be placed over railroad tracks, lower roadways, or sidewalks. When this rail is used as a separator between a roadway surface and a sidewalk surface, side drain slots will not be permitted.

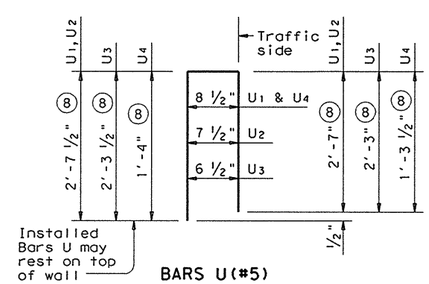

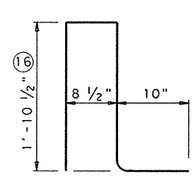

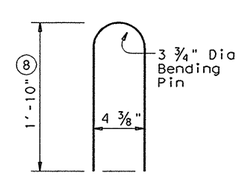

CONSTRUCTION NOTES:

This rail may be slip-formed if approved by the Engineer when epoxy adhesive anchor bolts are used.

Cap all open ends of tubular steel sections.

At the contractor's option anchor bolts may be cast with the parapet (See Cast-in-Place Anchor Bolt Options).

Slip-forming parapet is not allowed if anchor bolts are cast with parapet wall.

Rail parapet must be plumb unless otherwise approved by the Engineer. Steel posts must be square to the top of parapet. Use epoxy mortar under post base plates if gaps larger than 1/16" exist.

Rail member sections must have at least two posts but not more than four.

Round or chamfer all exposed edges of steel components 1/16" by grinding prior to galvanizing.

MATERIAL NOTES:

Galvanize all steel components except reinforcing steel.

Anchor bolts must be 7/8" Dia ASTM A193 Grade B7 fully threaded rods with heavy hex nuts, one hardened washer and one (2 1/4" OD) washer each. Embed threaded rods into parapet wall with a Type III Class C epoxy anchorage system. Minimum embedment depth is 8". Anchorage system chosen must be able to achieve an ultimate tensile resistance of 34 kips per bolt. The Contractor must provide evidence to the Engineer that this can be achieved. Evidence of adequate tensile resistance can be based on the manufacturer's published values of ultimate tensile strength (anchor spacing and edge distance must be accounted for). Anchor installation, including hole size, drilling, and clean-out, must be in accordance with the manufacturer's instructions.

Optional cast-in-place anchor bolts must be 7/8" Dia ASTM A325 or A449 bolts (or A193 Gr B7 threaded rods with one tack welded heavy hex nut each) with one heavy hex nut and one hardened steel washer plus one 2 1/4" O.D. steel washer at each bolt. Nuts must conform to A563 requirements.

Use Class "C" concrete. Use Class "C" (HPC) if required elsewhere. Chamfer all exposed corners.

Reinforcing steel must be Grade 60.

Epoxy coat all rail reinforcement if slab bars are epoxy coated.

GENERAL NOTES:

This rail has been evaluated to be of equal strength to the T4 (A) railing, which has been crash tested to meet NCHRP Report 350 TL-3 criteria. This rail can be used for design speeds of 50 mph and greater when a TL-3 rated guard fence transition is used. When a TL-2 rated guard fence transition is used, this rail can only be used for design speeds of 45 mph and less.

This railing cannot be used on bridges with expansion joints providing more than 5" movement.

Rail anchorage details shown on this standard may require modification for select structure types. See appropriate details elsewhere in plans for these modifications.

Erection drawings showing panel lengths, rail post spacing, and anchor bolt setting must be submitted to the Engineer for approval.

Average weight of railing with no overlay: 263 plf total
234 plf (Conc)
29 plf (Steel).

SHEET 3 OF 3

Texas Department of Transportation
Bridge Division

TRAFFIC RAIL

TYPE T401

FILE: rlstd006.dgn	DN: TxDOT	CK: TxDOT	DW: JTR		CK: JMH
© TxDOT April 2009	DISTRICT	FEDERAL AID PROJECT			SHEET
REVISIONS	AUSTIN				532
05-11: Notes and Wall Joint Note.	COUNTY		CONTROL	SECT	JOB	HIGHWAY
	WILLIAMSON		0683	06	027	SH. 45 LOOP 1

ACC:
LEVELS DI...

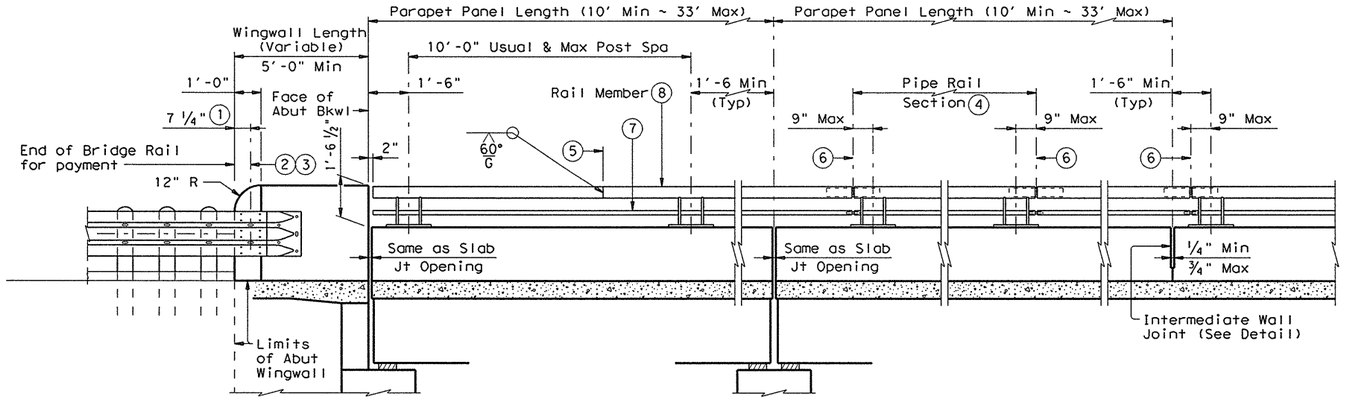

AT ABUTMENT BENTS
Showing TL-3 Transition

AT SLAB EXP JOINTS

AT INTERMEDIATE WALL JOINTS

ROADWAY ELEVATION OF RAIL

(Rail Member showing Elliptical Tube Option, Rectangular Tube Option similar).

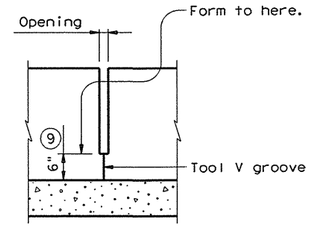

INTERMEDIATE WALL JOINT DETAIL

(Showing without raised sidewalk)
Provide at all interior bents without slab expansion joints. Space equally in between at 33' Max, 10' Min. Location independent of rail member splices.

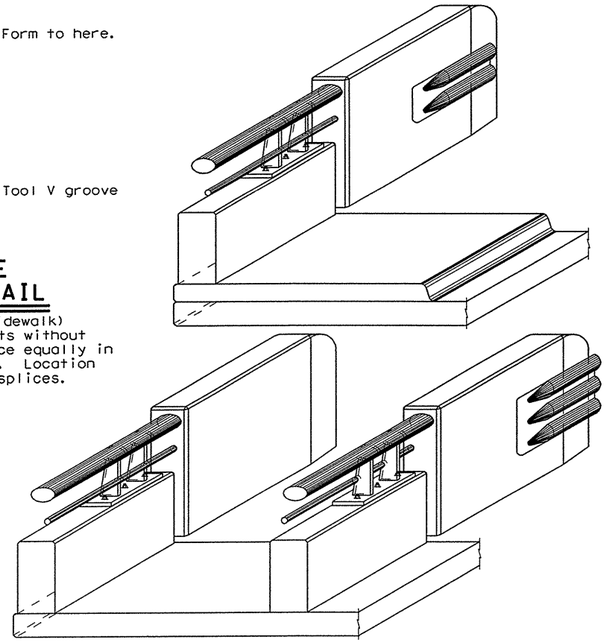

ISOMETRIC VIEWS AT END OF BRIDGE

(Rail Member showing Elliptical Tube Option, Rectangular Tube Option similar).

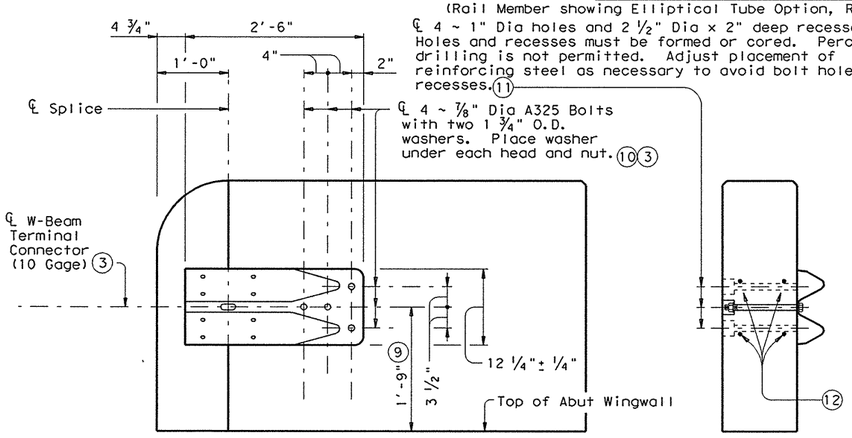

ELEVATION

SECTION

TL-2 TERMINAL CONNECTION DETAILS

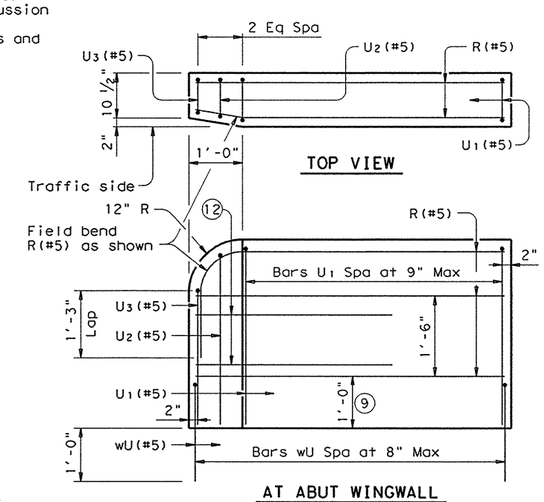

TOP VIEW

AT ABUT WINGWALL

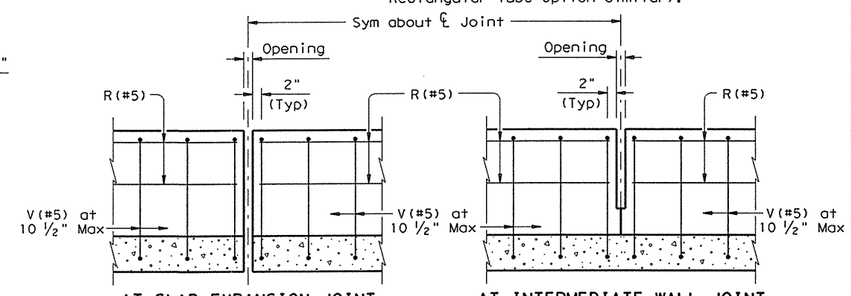

AT SLAB EXPANSION JOINT

AT INTERMEDIATE WALL JOINT

ELEVATION SHOWING TYPICAL REINFORCING PLACEMENT

(Showing without raised sidewalk)

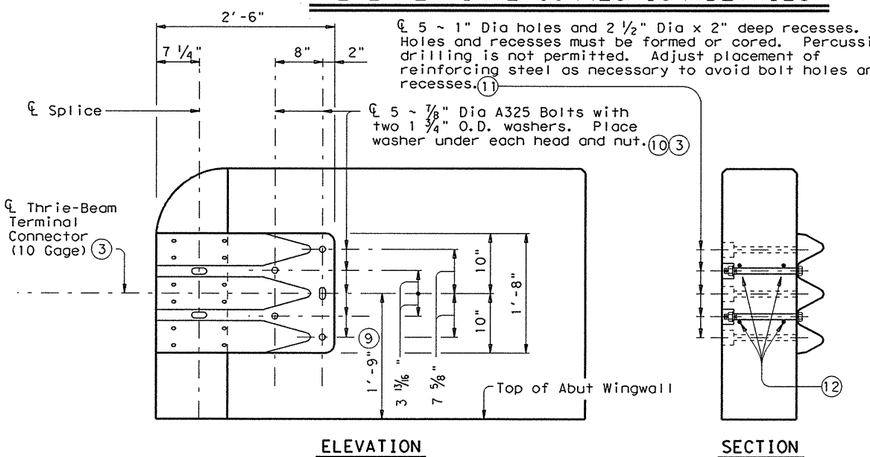

ELEVATION

SECTION

TL-3 TERMINAL CONNECTION DETAILS

1. Showing TL-3 Splice location, TL-2 Splice location is 1'-0".
2. ℄ Splice ~ Metal Beam Guard Fence Transitions must be attached to the bridge rail and extended along the embankment unless otherwise shown in the plans.
3. Terminal Connectors and associated hardware are to be paid for under the Item "Metal Beam Guard Fence".
4. Pipe rail sections must have at least two posts but not more than four.
5. One shop splice per pipe rail section is permitted with minimum 85 percent penetration. The weld may be square groove or single vee groove. Grind smooth.
6. ℄ Exp Jt or Splice Jt as required.
7. 2" Dia Std Pipe (2.375" O.D., 0.154" wall thickness) ASTM-A53 Gr B or A500 Gr B. Placed on sidewalk side of rail.
8. Unless directed otherwise by the Engineer, the fabricator may use the rectangular tube in lieu of the elliptical tube for the rail member.
9. Increase 2" for structures with overlay.
10. Bolts must be of sufficient length to extend 1/2" to 3/4" beyond nut.
11. Bolt recesses are only required when pedestrian sidewalks are adjacent to back of rail.
12. 4 additional Bars R(#5) 3'-8" in length shall be placed inside Bars U(#5) and centered 2'-0" from end of rail when Terminal Connections are required. Field bend as needed.

DISCLAIMER:
The use of this standard is governed by the "Texas Engineering Practice Act". No warranty of any kind is made by TxDOT for any purpose whatsoever. TxDOT assumes no responsibility for the conversion of this standard to other formats or for incorrect results or damages resulting from its use.

ACC:
LEVELS DISPLAYED
1

SHEET 1 OF 4

Texas Department of Transportation
Bridge Division

COMBINATION RAIL

TYPE C402

FILE: rlstd020.dgn	DN: TxDOT	CK: TxDOT	DW: JTR	CK: JMH	
©TxDOT April 2009	DISTRICT	FEDERAL AID PROJECT			SHEET
REVISIONS	AUSTIN				533
05-11: Notes and Wall Joint Note.	COUNTY		CONTROL	SECT	JOB	HIGHWAY
	WILLIAMSON		0683	06	027	SH 45 (ORP)

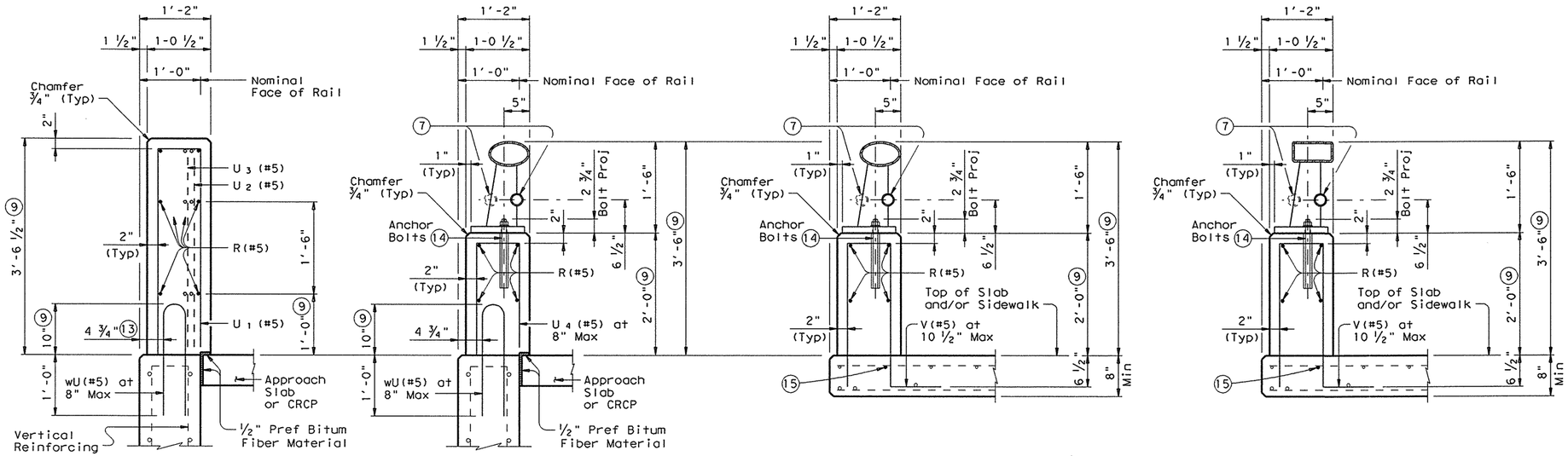

ON ABUTMENT WINGWALLS OR CIP RETAINING WALLS

ON CIP RETAINING WALLS
(Showing Elliptical Tube Option)

ON BRIDGE SLAB
(Showing Elliptical Tube Option)

ON BRIDGE SLAB
(Showing Rectangular Tube Option)

SECTIONS THRU RAIL WITHOUT RAISED SIDEWALK (8)

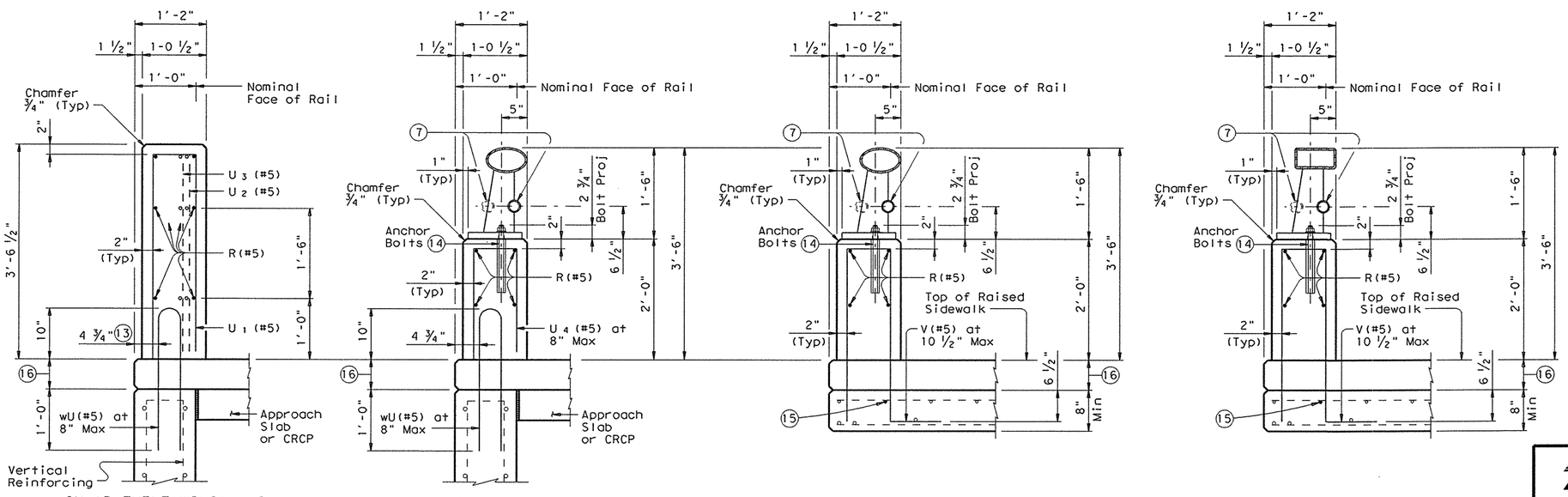

ON ABUTMENT WINGWALLS OR CIP RETAINING WALLS

ON CIP RETAINING WALLS
(Showing Elliptical Tube Option)

ON BRIDGE SLAB
(Showing Elliptical Tube Option)

ON BRIDGE SLAB
(Showing Rectangular Tube Option)

SECTIONS THRU RAIL WITH RAISED SIDEWALK (8)

(7) 2" Dia Std Pipe (2.375" O.D., 0.154" wall thickness) ASTM-A53 Gr B or A500 Gr B. Placed on sidewalk side of rail.

(8) Unless directed otherwise by the Engineer, the fabricator may use the rectangular tube in lieu of the elliptical tube for the rail member.

(9) Increase 2" for structures with overlay.

(13) 5 ½" when vertical reinforcing has closer clear cover over horizontal reinforcing in abutment wingwalls or retaining walls on traffic side of wall.

(14) See "Material Notes" for anchor bolt information.

(15) Top longitudinal slab bar may be adjusted laterally 3" plus or minus to tie reinforcing.

(16) Raised Sidewalk

DISCLAIMER:
Act: The use of this standard is governed by the "Texas Engineering Practice Act". No warranty of any kind is made by TxDOT for any purpose whatsoever. TxDOT assumes no responsibility for the conversion of this standard to other formats or for incorrect results or damages resulting from its use.

LEVELS DL. ED ACC:

SHEET 2 OF 4

Texas Department of Transportation
Bridge Division

COMBINATION RAIL

TYPE C402

FILE: ristd020.dgn	DN: TxDOT	CK: TxDOT	DW: JTR	CK: JMH	
© TxDOT April 2009	DISTRICT	FEDERAL AID PROJECT			SHEET
REVISIONS	AUSTIN				534
05-11: Notes and Wall Joint Note.	COUNTY		CONTROL	SECT	JOB	HIGHWAY
	WILLIAMSON		0683	06	027	SH 45 LOOP 1

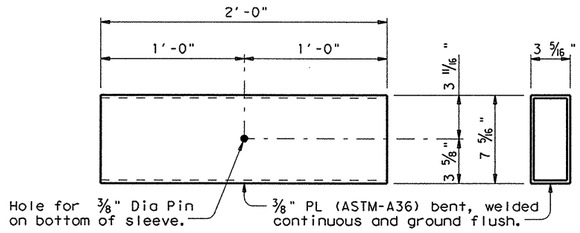

PLAN END VIEW

RECTANGULAR TUBE SLEEVE MEMBER DETAIL

(See Tube Fabrication Detail)

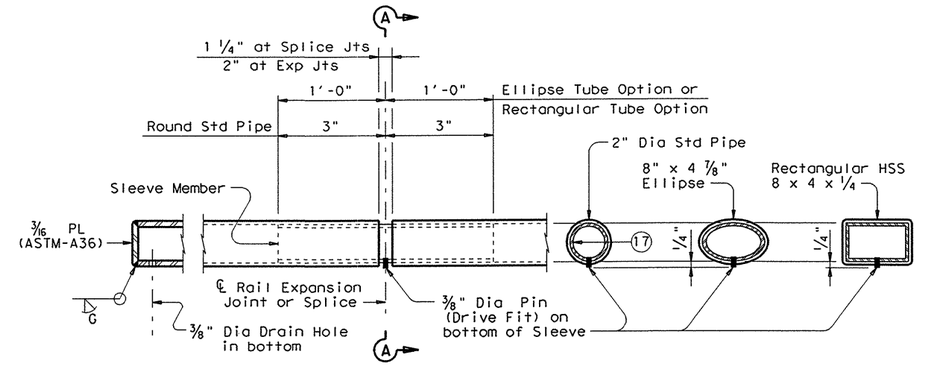

AT RAIL ENDS | AT SPLICE OR EXP JTS | SECTION A-A (Showing Round Std Pipe) | SECTION A-A (Showing Ellipse Tube Option) | SECTION A-A (Showing Rectangular Tube Option)

TUBE FABRICATION DETAILS (8)

ELLIPTICAL TUBE & ELLIPTICAL SLEEVE MEMBER		
8" x 4 7/8" Ellipse	Elliptical Sleeve Member	
Material	Material	Thickness
6" Dia Std Pipe ASTM-A53 E or S Gr B)	ASTM-A53 Gr B	0.353"
	A36 or A500 Gr B	0.339"
	API-5LX52	0.224"
6 5/8" O.D. Pipe x 0.188" API-5LX52	ASTM-A53 Gr B	0.339"
	A36 or A500 Gr B	0.325"
	API-5LX52	0.188"

Notes: Other sections of equal or greater strength are acceptable for elliptical sleeves. The major and minor diameters of the rail member may vary +/- 0.1875" from plan dimension. However, the difference between the outside diameters of the elliptical sleeve and the inside diameters of the rail member must not exceed 0.25 inches.

(7) 2" Dia Std Pipe (2.375" O.D., 0.154" wall thickness) ASTM-A53 Gr B or A500 Gr B. Placed on sidewalk side of rail.

(8) Unless directed otherwise by the Engineer, the fabricator may use the rectangular tube in lieu of the elliptical tube for the rail member.

(17) Sleeve Member 1 1/2" Dia Std Pipe (1.90" O.D., 0.145" wall thickness) ASTM-A53 Gr B or A500 Gr B.

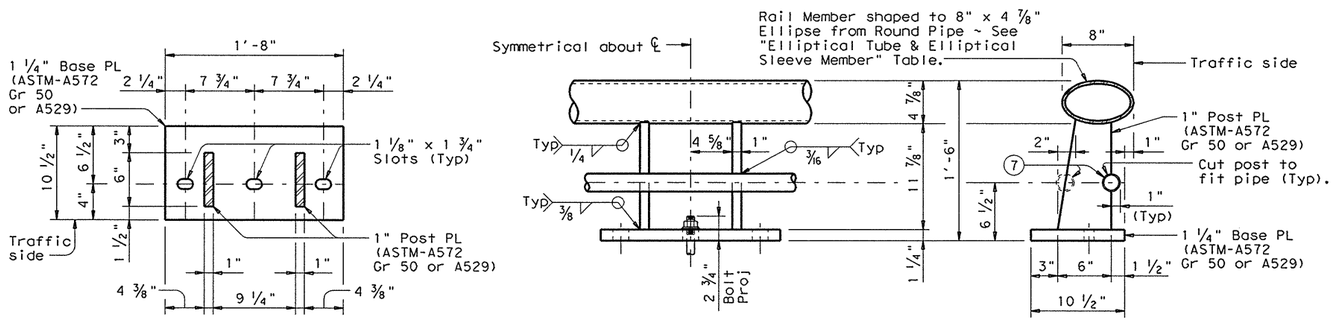

SECTION THRU POST | ELEVATION | SECTION THRU RAIL

ELLIPTICAL TUBE WITH RAIL POST & ANCHORAGE DETAILS

(Showing Elliptical Tube Option)

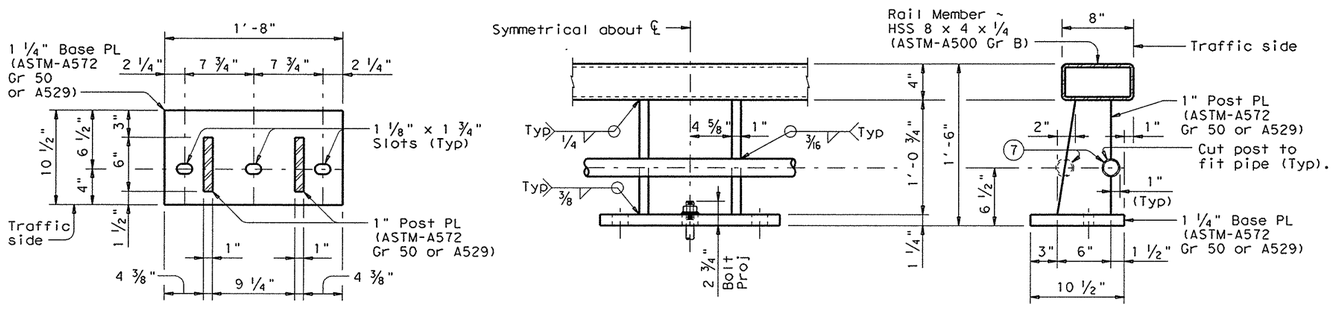

SECTION THRU POST | ELEVATION | SECTION THRU RAIL

RECTANGULAR TUBE WITH RAIL POST & ANCHORAGE DETAILS (8)

(Showing Rectangular Tube Option)

DISCLAIMER:
The use of this standard is governed by the "Texas Engineering Practice Act". The use of any kind is made by TxDOT for any purpose whatsoever. TxDOT assumes no responsibility for the conversion of this standard to other formats or for incorrect results or damages resulting from its use.

ACC:

LEVELS DISPLAYED

SHEET 3 OF 4

Texas Department of Transportation
Bridge Division

COMBINATION RAIL

TYPE C402

FILE: rlstd020.dgn	DN: TxDOT	CK: TxDOT	DW: JTR		CK: JMH
© TxDOT April 2009	DISTRICT	FEDERAL AID PROJECT			SHEET
REVISIONS	AUSTIN				535
05-11: Notes and Wall Joint Note.	COUNTY		CONTROL	SECT	JOB	HIGHWAY
	WILLIAMSON		0683	06	027	SH 45 LOOP 1

DISCLAIMER:
The use of this standard is governed by the "Texas Engineering Practice Act." The use of any kind is made by TxDOT for any purpose whatsoever. TxDOT assumes no responsibility for the conversion of this standard to other formats or for incorrect results or damages resulting from its use.

RAIL DATA FOR HORIZONTAL CURVES			
	RADIUS TO FACE OF RAIL	MAX CHORD LENGTH	CONSTRUCT OR FABRICATE
Rail Members	Over 2800'	29'-0"	Straight rail sections
	Over 1400' thru 2800'	14'-6"	To required radius or to chords shown (20)
	Over 700' thru 1400'	7'-3"	
	Thru 700'	Zero	To required radius (20)

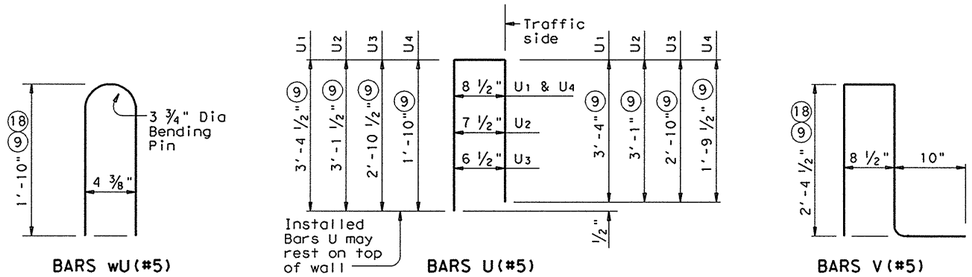

(9) Increase 2" for structures with overlay.

(14) See "Material Notes" for anchor bolt information.

(18) For raised sidewalks, add sidewalk height to total bar height. Use sidewalk height at rail's location.

(19) Slots are not allowed in areas where there is a joint in the concrete parapet between rail post.

(20) Shop drawings for approval required for tubular steel sections.

CONSTRUCTION NOTES:

This rail may be slip-formed if approved by the Engineer when epoxy adhesive anchor bolts are used.

Cap all open ends of tubular steel sections.

At the contractor's option anchor bolts may be cast with the parapet (See Cast-in-Place Anchor Bolt Options).

Slip-forming parapet is not allowed if anchor bolts are cast with parapet wall.

Rail parapet must be plumb unless otherwise approved by the Engineer. Steel posts must be square to the top of parapet. Use epoxy mortar under post base plates if gaps larger than 1/16" exist.

Pipe rail sections must have at least two posts but not more than four.

Round or chamfer all exposed edges of steel components 1/16" by grinding prior to galvanizing.

MATERIAL NOTES:

Galvanize all steel components except reinforcing steel.

Anchor bolts must be 7/8" Dia ASTM A193 Grade B7 fully threaded rods with heavy hex nuts, one hardened washer and one (2 1/4" OD) washer each. Embed threaded rods into parapet wall with a Type III Class C epoxy anchorage system. Minimum embedment depth is 8". Anchorage system chosen must be able to achieve an ultimate tensile resistance of 34 kips per bolt. The Contractor must provide evidence to the Engineer that this can be achieved. Evidence of adequate tensile resistance can be based on the manufacturer's published values of ultimate tensile strength (anchor spacing and edge distance must be accounted for). Anchor installation, including hole size, drilling, and clean-out, must be in accordance with the manufacturer's instructions.

Optional cast-in-place anchor bolts must be 7/8" Dia ASTM A325 or A449 bolts (or A193 Gr B7 threaded rods with one tack welded heavy hex nut each) with one heavy hex nut and one hardened steel washer plus one 2 1/4" O.D. steel washer at each bolt. Nuts must conform to A563 requirements.

Use Class "C" concrete. Use Class "C" (HPC) if required elsewhere. Chamfer all exposed corners.

Reinforcing steel must be Grade 60.

Epoxy coat all rail reinforcement if slab bars are epoxy coated.

GENERAL NOTES:

This rail has been evaluated and accepted to be of equal strength to railings with like geometry, which have been crash tested to meet NCHRP Report 350 TL-3 criteria. This rail can be used for design speeds of 50 mph and greater when a TL-3 rated guard fence transition is used. When a TL-2 rated guard fence transition is used, this rail can only be used for design speeds of 45 mph and less.

This railing cannot be used on bridges with expansion joints providing more than 5" movement.

Rail anchorage details shown on this standard may require modification for select structure types. See appropriate details elsewhere in plans for these modifications.

Erection drawings showing panel lengths, rail post spacing, and anchor bolt setting must be submitted to the Engineer for approval.

Average weight of railing with no overlay: 347 plf total
313 plf (Conc)
34 plf (Steel).

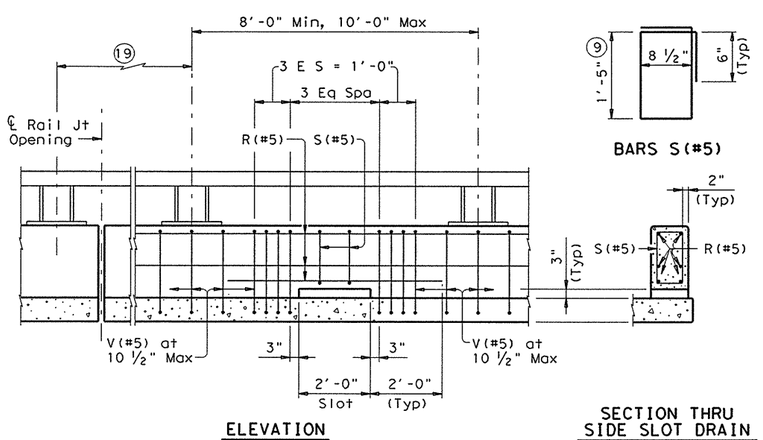

OPTIONAL SIDE SLOT DRAIN DETAILS

Note: Side Slot Drains must be centered between rail posts within the limits shown. Side Slot Drains may be used where shown elsewhere on the plans or as directed by the Engineer. Drains should not be placed over railroad tracks, lower roadways, or sidewalks. When this rail is used as a separator between a roadway surface and a sidewalk surface, side drain slots will not be permitted.

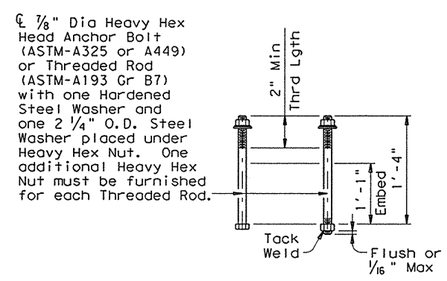

CAST-IN-PLACE ANCHOR BOLT OPTIONS (14)

SHEET 4 OF 4

Texas Department of Transportation
Bridge Division

COMBINATION RAIL

TYPE C402

FILE: rlstd020.dgn	DN: TxDOT	CK: TxDOT	DW: JTR	CK: JMH
© TxDOT April 2009	DISTRICT	FEDERAL AID PROJECT		SHEET
REVISIONS	AUSTIN			536
05-11: Notes and Wall Joint Note.	COUNTY	CONTROL	SECT	JOB	HIGHWAY
	WILLIAMSON	0683	06	027	SH 29, LOOP 1

LEVELS DISPLAYED
ACC:
1

DATE: 6/20/2011 TIME: 2:55:02 PM

NOTES:

1. UTILITIES SHOWN ARE PROVIDED FOR INFORMATIONAL PURPOSES ONLY AND SHOULD BE FIELD VERIFIED PRIOR TO CONSTRUCTION.

0 25 50 100

LEGEND

- (A) EXISTING UCV
- (B) EXISTING GROUND BOX (TY D)
- (#) CONDUIT RUN NUMBER (SEE CONDUIT SUMMARY)
- PROPOSED CONDUIT SCHD 40 PVC
- PROPOSED DUCT BANK
- EXISTING DUCT BANK
- EXISTING CONDUIT
- EXISTING GROUND BOX
- PROPOSED UCV
- PROPOSED GROUND BOX (TY D)
- TRAFFIC DIRECTION/TRAVEL LANE
- PROPOSED DITCH ℄

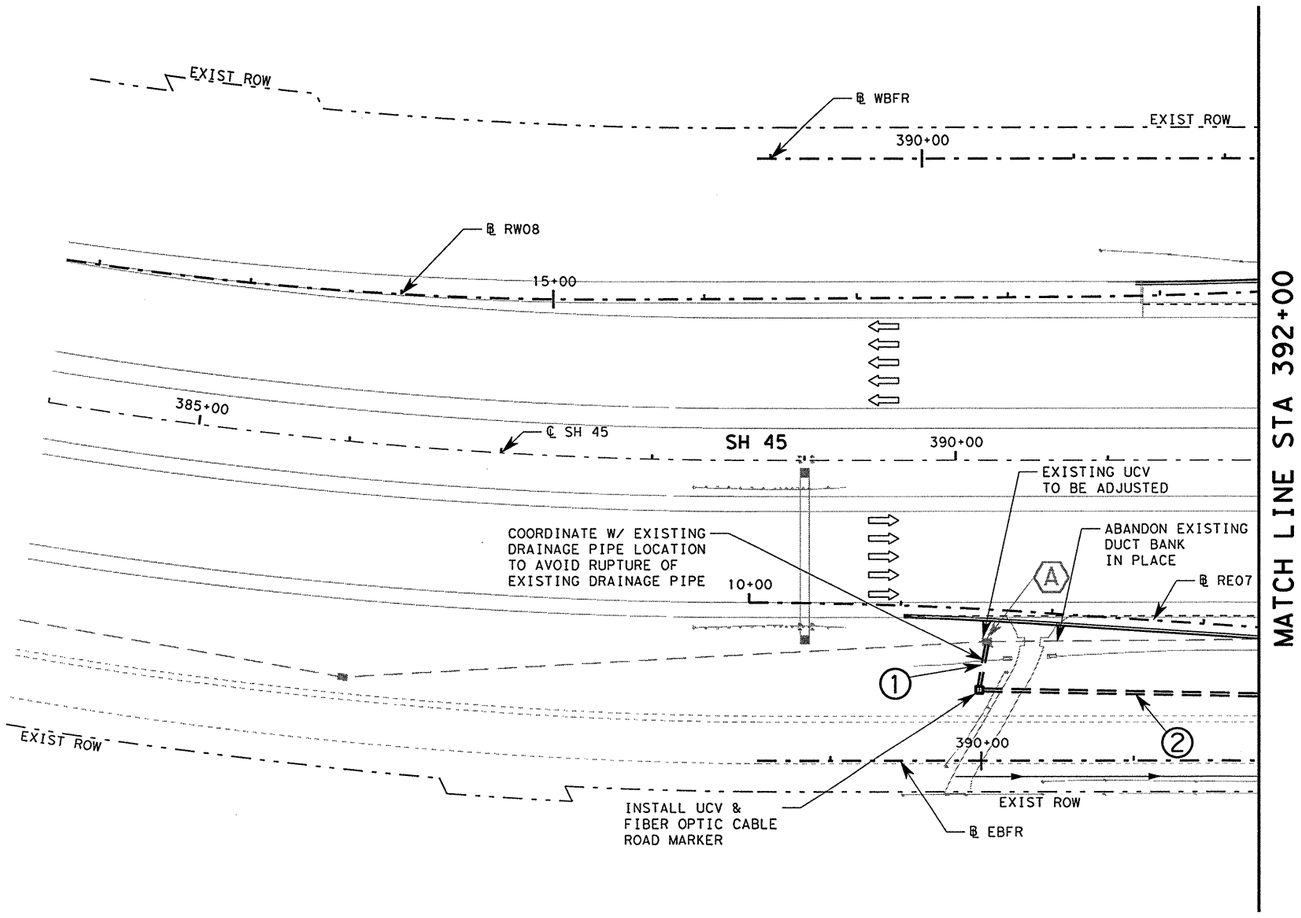

CONDUIT SUMMARY												
	DESCRIPTION	RUN NO.	1	2	3	4	5	6	7	8	9	10
		RUN LENGTH (FT)	30	180								
CONDUIT	DUCT BANK (12-2")		1	1								
	CONDT (PVC) (SCHD 40) (2") *											
	CONDT (PVC) (SCHD 40) (3") *											
	CONDT (PVC) (SCHD 40) (4") *											
	CONDT (RM) (3") *											
	14" STEEL CASING BORE											

* CONTRACTOR MAY UTILIZE HDPE CONDUIT IN PLACE OF PVC AND RMC.

SUMMARY OF TRAFFIC MANAGEMENT SYSTEM QUANTITIES				
ITEM	CODE	DESCRIPTION	UNIT	QTY
618	2018	CONDT (PVC) (SCHD 40) (2")	FT	0
618	2024	CONDT (PVC) (SCHD 40) (4")	LF	0
624	2014	GROUND BOX TY D (162922) W/APRON	EA	0
624	2034	REMOVE EXISTING GROUND BOXES	EA	0
6014	2037	FIBER OPTIC CABLE ROAD MARKER	EA	1
STA ~~6020~~	2001	SYSTEM LOOP DETECTOR	EA	0
8368	2006	GROUND BOX (INSTALL)	EA	0
6749	2001	UCV	EA	1
6749	2002	UCV (REMOVE)	EA	0
6749	2003	UCV (ADJUST)	EA	1
6752	2001	DUCT BANK (12-2")	LF	210

Rev. 6/29/11

STATE OF TEXAS
CESAR R. NEVAREZ
106199
LICENSED
PROFESSIONAL ENGINEER

Cesar R. Nevarez, P.E.
6-20-2011

REV. No.	DATE	REVISION	BY
△			
△			
△			

PBSJ
an Atkins company
TBPE REG. # F-474

Texas Department of Transportation
Austin District
©2011 by TxDOT

SH 45 / O'CONNOR DRIVE TRAFFIC MANAGEMENT SYSTEM LAYOUT STA 384+00 TO 392+00

SCALE: 1"=100' SHEET 1 OF 7

DESIGNED: RVP	FED. RD DIV. No.	STATE	PROJECT No.			HIGHWAY No.	
CHECKED: SED	6	TEXAS				LP 1/SH 45	
DRAWN: RVP	STATE DISTRICT	COUNTY	CONTROL No.	SECTION No.	JOB No.	SHEET No.	
CHECKED: SED	AUSTIN	WILLIAMSON	0683	06	027	537	

PLOT DRIVER: RD*11x17*B&W.plt
PEN TABLE: plotordr*ocon.tbl
FILE: r:\trans-design\o'connor\cadd\tms\0C45TMS01.dgn

DATE: 6/20/2011 TIME: 2:51:00 PM

NOTES:

1. UTILITIES SHOWN ARE PROVIDED FOR INFORMATIONAL PURPOSES ONLY AND SHOULD BE FIELD VERIFIED PRIOR TO CONSTRUCTION.
2. CONTRACTOR SHALL AVOID DAMAGE TO EXISTING LOOP DETECTOR'S CONDUIT AND WIRING. IF DAMAGE OCCURS AND REPLACEMENT IS REQUIRED, AT CONTRACTOR'S EXPENSE, THE CONTRACTOR IS RESPONSIBLE FOR REPLACEMENT.

0 25 50 100

LEGEND

- (A) EXISTING UCV
- (B) EXISTING GROUND BOX (TY D)
- (#) CONDUIT RUN NUMBER (SEE CONDUIT SUMMARY)
- PROPOSED CONDUIT SCHD 40 PVC
- PROPOSED DUCT BANK
- EXISTING DUCT BANK
- EXISTING CONDUIT
- EXISTING GROUND BOX
- PROPOSED UCV
- PROPOSED GROUND BOX (TY D)
- TRAFFIC DIRECTION/TRAVEL LANE
- PROPOSED DITCH ℄

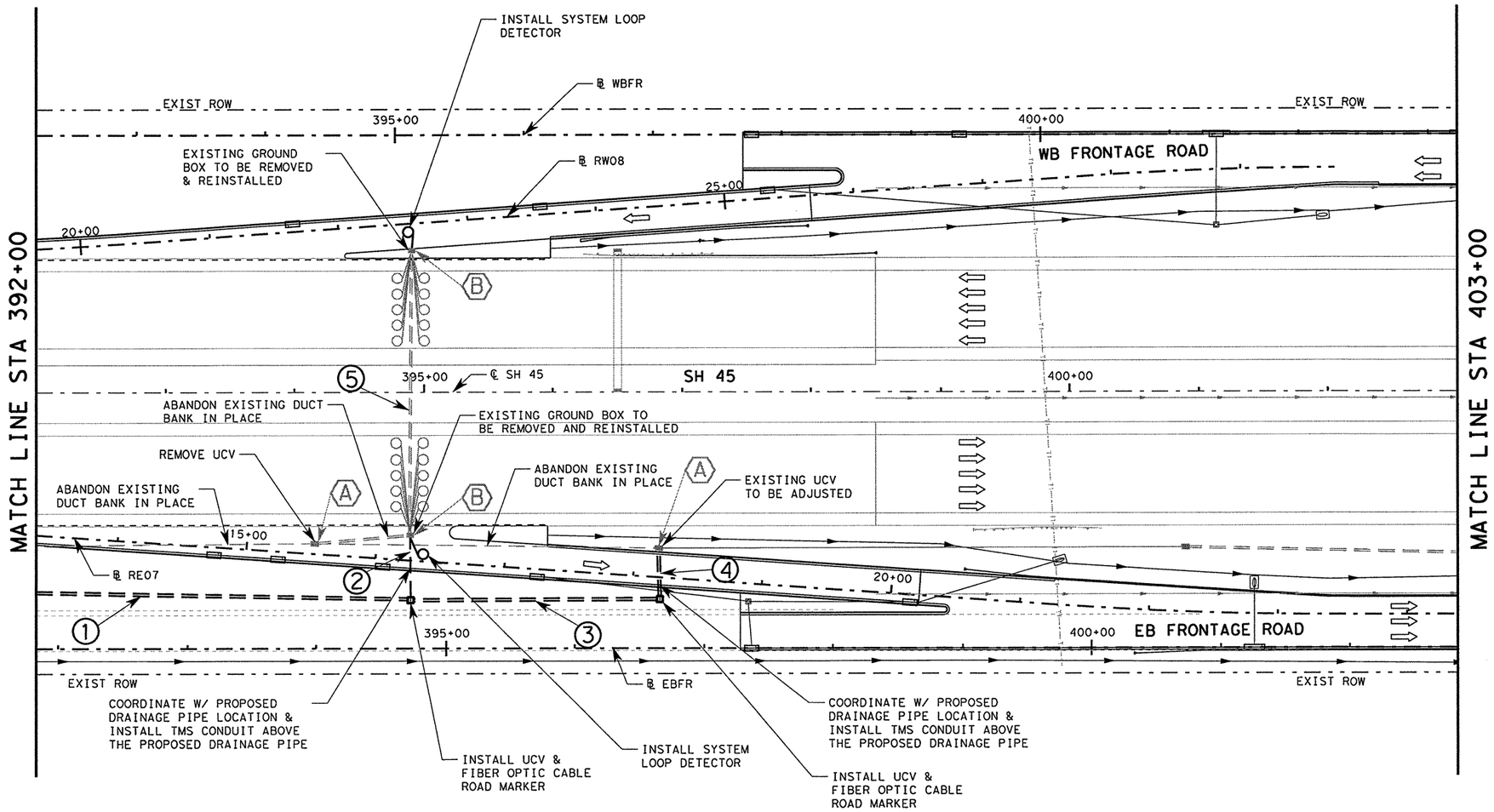

CONDUIT SUMMARY												
	DESCRIPTION	RUN NO.	1	2	3	4	5	6	7	8	9	10
		RUN LENGTH (FT)	290	50	190	35	220					
CONDUIT	DUCT BANK (12-2")		1		1	1						
	CONDT (PVC) (SCHD 40) (2") *			1								
	CONDT (PVC) (SCHD 40) (3") *											
	CONDT (PVC) (SCHD 40) (4") *											
	CONDT (RM) (3") *											
	14" STEEL CASING BORE											
	EXISTING CONDUIT						1					

* CONTRACTOR MAY UTILIZE HDPE CONDUIT IN PLACE OF PVC AND RMC.

SUMMARY OF TRAFFIC MANAGEMENT SYSTEM QUANTITIES				
ITEM	CODE	DESCRIPTION	UNIT	QTY
618	2018	CONDT (PVC) (SCHD 40) (2")	FT	50
618	2024	CONDT (PVC) (SCHD 40) (4")	LF	0
624	2014	GROUND BOX TY D (162922) W/APRON	EA	0
624	2034	REMOVE EXISTING GROUND BOXES	EA	2
6014	2037	FIBER OPTIC CABLE ROAD MARKER	EA	2
8774 ~~6020~~	2001	SYSTEM LOOP DETECTOR	EA	2
8368	2006	GROUND BOX (INSTALL)	EA	2
6749	2001	UCV	EA	2
6749	2002	UCV (REMOVE)	EA	1
6749	2003	UCV (ADJUST)	EA	1
6762	2001	DUCT BANK (12-2")	LF	515

Rev. 6/29/11

STATE OF TEXAS
CESAR R. NEVAREZ
106199
LICENSED
PROFESSIONAL ENGINEER

Cesar R. Nevarez, P.E.
6.20.2011

REV. No.	DATE	REVISION	BY
△			
△			
△			

PBSJ
an Atkins company TBPE REG. # F-474

Texas Department of Transportation
Austin District
©2011 by TxDOT

SH 45 / O'CONNOR DRIVE TRAFFIC MANAGEMENT SYSTEM LAYOUT STA 392+00 TO 403+00

SCALE: 1"=100' SHEET 2 OF 7

DESIGNED: RVP	FED. RD DIV. No.	STATE	PROJECT No.			HIGHWAY No.
CHECKED: SED	6	TEXAS				LP 1/SH 45
DRAWN: RVP	STATE DISTRICT	COUNTY	CONTROL No.	SECTION No.	JOB No.	SHEET No.
CHECKED: SED	AUSTIN	WILLIAMSON	0683	06	027	538

PLOT DRIVER: RD*11x17*B&W.plt
PEN TABLE: plotordr*ocon.tbl
FILE: r:\trans-design\o'connor\oadd\tms\OC45TMS02.dgn

DATE: 6/20/2011 TIME: 2:51:01 PM

NOTES:

1. UTILITIES SHOWN ARE PROVIDED FOR INFORMATIONAL PURPOSES ONLY AND SHOULD BE FIELD VERIFIED PRIOR TO CONSTRUCTION.

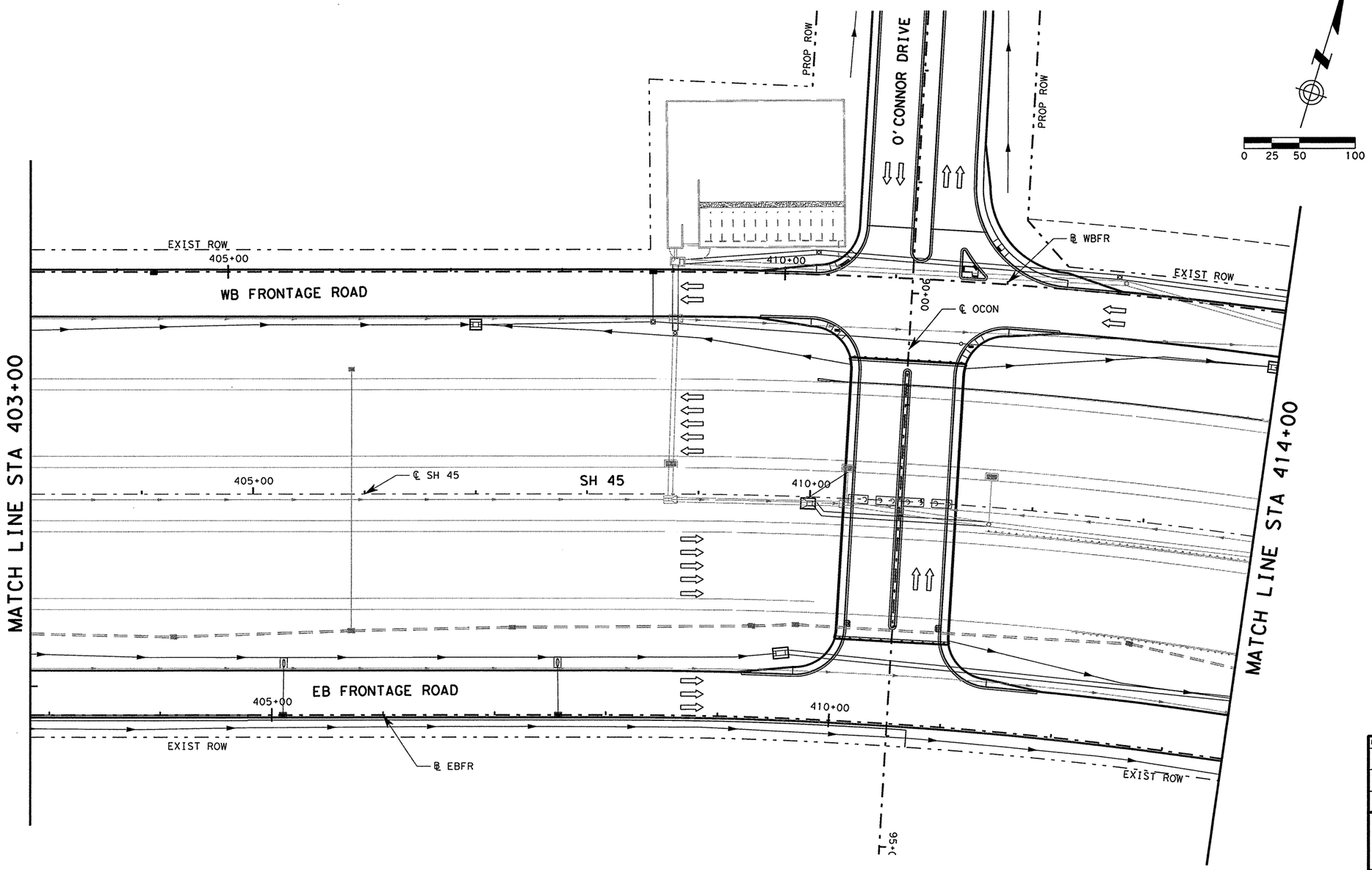

LEGEND

- (A) EXISTING UCV
- (B) EXISTING GROUND BOX (TY D)
- (#) CONDUIT RUN NUMBER (SEE CONDUIT SUMMARY)
- PROPOSED CONDUIT SCHD 40 PVC
- PROPOSED DUCT BANK
- EXISTING DUCT BANK
- EXISTING CONDUIT
- EXISTING GROUND BOX
- PROPOSED UCV
- PROPOSED GROUND BOX (TY D)
- TRAFFIC DIRECTION/TRAVEL LANE
- PROPOSED DITCH ℄

NO WORK REQUIRED.
SHEET INCLUDED FOR
PROJECT CONTINUITY.

Rev. 6/29/11

REV. No.	DATE	REVISION	BY
△			
△			
△			

PBSJ an Atkins company TBPE REG. # F-474

Texas Department of Transportation
Austin District
©2011 by TxDOT

SH 45 / O'CONNOR DRIVE TRAFFIC MANAGEMENT SYSTEM LAYOUT STA 403+00 TO 414+00

SCALE: 1"=100' SHEET 3 OF 7

DESIGNED: RVP	FED. RD DIV. No.	STATE	PROJECT No.			HIGHWAY No.	
CHECKED: SED	6	TEXAS				LP 1/SH 45	
DRAWN: RVP	STATE DISTRICT	COUNTY	CONTROL No.	SECTION No.	JOB No.	SHEET No.	
CHECKED: SED	AUSTIN	WILLIAMSON	0683	06	027	539	

PLOT DRIVER: RDx11x17xB&W.plt
PEN TABLE: plotordr*ocon.tbl
FILE: r:\trans-design\o'connor\cadd\tms\OC45TMS03.dgn

DATE: 6/20/2011 TIME: 2:51:03 PM

NOTES:

1. UTILITIES SHOWN ARE PROVIDED FOR INFORMATIONAL PURPOSES ONLY AND SHOULD BE FIELD VERIFIED PRIOR TO CONSTRUCTION.

0 25 50 100

LEGEND

- (A) EXISTING UCV
- (B) EXISTING GROUND BOX (TY D)
- (#) CONDUIT RUN NUMBER (SEE CONDUIT SUMMARY)
- PROPOSED CONDUIT SCHD 40 PVC
- PROPOSED DUCT BANK
- EXISTING DUCT BANK
- EXISTING CONDUIT
- EXISTING GROUND BOX
- PROPOSED UCV
- PROPOSED GROUND BOX (TY D)
- TRAFFIC DIRECTION/TRAVEL LANE
- PROPOSED DITCH ℄

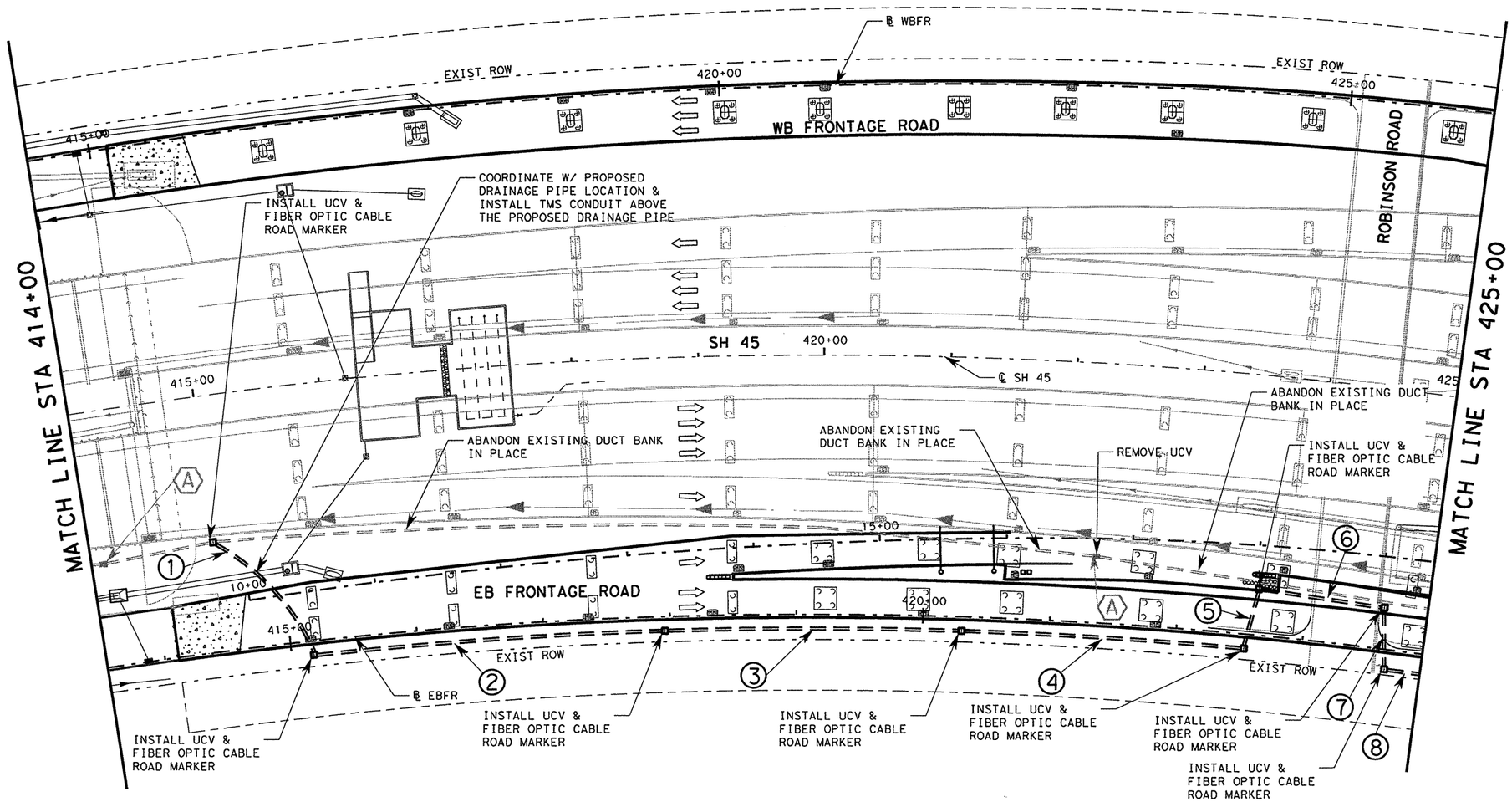

CONDUIT SUMMARY												
	DESCRIPTION	RUN NO.	1	2	3	4	5	6	7	8	9	10
		RUN LENGTH (FT)	120	275	230	220	45	95	45	25		
CONDUIT	DUCT BANK (12-2")		1	1	1	1	1	1	1	1		
	CONDT (PVC) (SCHD 40) (2") *											
	CONDT (PVC) (SCHD 40) (3") *											
	CONDT (PVC) (SCHD 40) (4") *											
	CONDT (RM) (3") *											
	14" STEEL CASING BORE											

* CONTRACTOR MAY UTILIZE HDPE CONDUIT IN PLACE OF PVC AND RMC.

SUMMARY OF TRAFFIC MANAGEMENT SYSTEM QUANTITIES				
ITEM	CODE	DESCRIPTION	UNIT	QTY
618	2018	CONDT (PVC) (SCHD 40) (2")	FT	0
618	2024	CONDT (PVC) (SCHD 40) (4")	LF	0
624	2014	GROUND BOX TY D (162922) W/APRON	EA	0
624	2034	REMOVE EXISTING GROUND BOXES	EA	0
6014	2037	FIBER OPTIC CABLE ROAD MARKER	EA	8
8174 ~~6030~~	2001	SYSTEM LOOP DETECTOR	EA	0
8368	2006	GROUND BOX (INSTALL)	EA	0
~~6749~~	~~2001~~	UCV	EA	8
~~6749~~	~~2002~~	UCV (REMOVE)	EA	1
~~6749~~	~~2003~~	UCV (ADJUST)	EA	0
~~6752~~	~~2001~~	DUCT BANK (12-2")	LF	1055

Rev. 6/29/11

STATE OF TEXAS
CESAR R. NEVAREZ
106199
LICENSED PROFESSIONAL ENGINEER

Cesar R. Nevarez, P.E.
6.20.2011

REV. No.	DATE	REVISION	BY
△			
△			
△			

PBSJ an Atkins company TBPE REG. # F-474

Texas Department of Transportation
Austin District
©2011 by TxDOT

SH 45 / O'CONNOR DRIVE TRAFFIC MANAGEMENT SYSTEM LAYOUT STA 414+00 TO 425+00

SCALE: 1"=100' SHEET 4 OF 7

DESIGNED: RVP	FED. RD DIV. No.	STATE	PROJECT No.			HIGHWAY No.
CHECKED: SED	6	TEXAS				LP 1/SH 45
DRAWN: RVP	STATE DISTRICT	COUNTY	CONTROL No.	SECTION No.	JOB No.	SHEET No.
CHECKED: SED	AUSTIN	WILLIAMSON	0683	06	027	540

PLOT DRIVER: RD*11x17*BBW.pl+
PEN TABLE: plotordr*ocon.tbl
FILE: r:\trans-design\o'connor\cadd\tms\OC45TMS04.dgn

DATE: 6/20/2011 TIME: 2:51:04 PM

NOTES:

1. UTILITIES SHOWN ARE PROVIDED FOR INFORMATIONAL PURPOSES ONLY AND SHOULD BE FIELD VERIFIED PRIOR TO CONSTRUCTION.

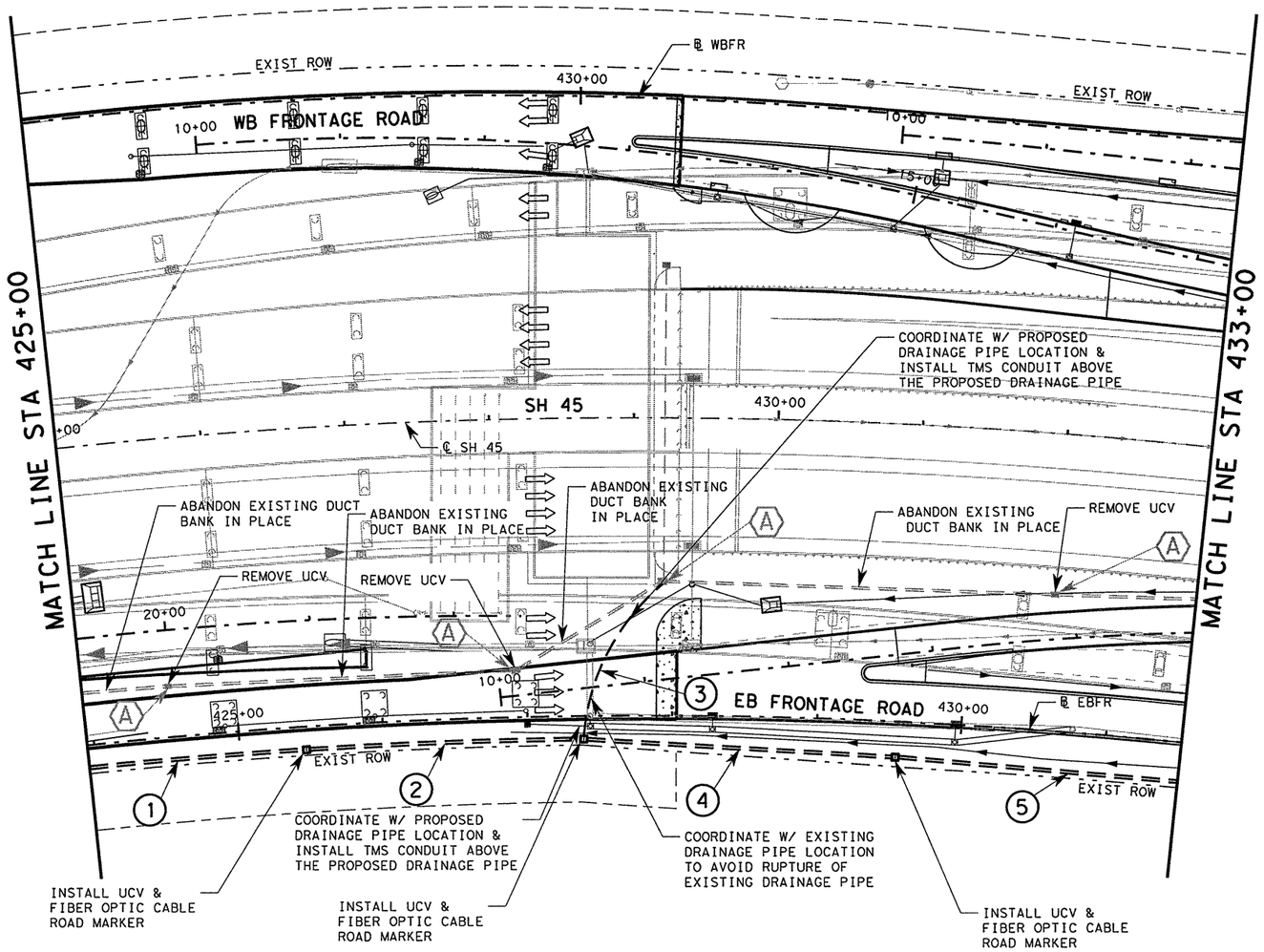

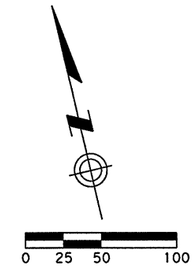

LEGEND

- (A) EXISTING UCV
- (B) EXISTING GROUND BOX (TY D)
- (#) CONDUIT RUN NUMBER (SEE CONDUIT SUMMARY)
- PROPOSED CONDUIT SCHD 40 PVC
- PROPOSED DUCT BANK
- EXISTING DUCT BANK
- EXISTING CONDUIT
- EXISTING GROUND BOX
- PROPOSED UCV
- PROPOSED GROUND BOX (TY D)
- TRAFFIC DIRECTION/TRAVEL LANE
- PROPOSED DITCH ℄

STATE OF TEXAS
CESAR R. NEVAREZ
106199
LICENSED PROFESSIONAL ENGINEER

Cesar R. Nevarez, P.E.
6.20.2011

REV. No.	DATE	REVISION	BY
△			
△			
△			

PBSJ an Atkins company TBPE REG. # F-474

Texas Department of Transportation
Austin District
©2011 by TxDOT

SH 45 / O'CONNOR DRIVE TRAFFIC MANAGEMENT SYSTEM LAYOUT STA 425+00 TO 433+00

SCALE: 1"=100' SHEET 5 OF 7

DESIGNED: RVP	FED. RD DIV. No.	STATE	PROJECT No.	HIGHWAY No.
CHECKED: SED	6	TEXAS		LP 1/SH 45

DRAWN: RVP	STATE DISTRICT	COUNTY	CONTROL No.	SECTION No.	JOB No.	SHEET No.
CHECKED: SED	AUSTIN	WILLIAMSON	0683	06	027	541

CONDUIT SUMMARY

	DESCRIPTION	RUN NO.	1	2	3	4	5	6	7	8	9	10
		RUN LENGTH (FT)	150	190	125	210	195					
CONDUIT	DUCT BANK (12-2")		1	1		1	1					
	CONDT (PVC) (SCHD 40) (2") *				1							
	CONDT (PVC) (SCHD 40) (3") *											
	CONDT (PVC) (SCHD 40) (4") *											
	CONDT (RM) (3") *											
	14" STEEL CASING BORE											

* CONTRACTOR MAY UTILIZE HDPE CONDUIT IN PLACE OF PVC AND RMC.

SUMMARY OF TRAFFIC MANAGEMENT SYSTEM QUANTITIES

ITEM	CODE	DESCRIPTION	UNIT	QTY
618	2018	CONDT (PVC) (SCHD 40) (2")	FT	125
618	2024	CONDT (PVC) (SCHD 40) (4")	LF	0
624	2014	GROUND BOX TY D (162922) W/APRON	EA	0
624	2034	REMOVE EXISTING GROUND BOXES	EA	0
6014	2037	FIBER OPTIC CABLE ROAD MARKER	EA	3
8734 ~~6020~~	2001	SYSTEM LOOP DETECTOR	EA	0
8368	2006	GROUND BOX (INSTALL)	EA	0
6749	2001	UCV	EA	3
6749	2002	UCV (REMOVE)	EA	3
6749	2003	UCV (ADJUST)	EA	0
6752	2001	DUCT BANK (12-2")	LF	745

Rev. 6/29/11

PLOT DRIVER: RD*11x17*B&W.plt
PEN TABLE: plotordr*ocon.tbl
FILE: r:\trans-design\o'connor\cadd\TMS\OC45TMS05.dgn

DATE: 6/20/2011 TIME: 2:51:05 PM

NOTES:

1. UTILITIES SHOWN ARE PROVIDED FOR INFORMATIONAL PURPOSES ONLY AND SHOULD BE FIELD VERIFIED PRIOR TO CONSTRUCTION.

0 25 50 100

LEGEND

- (A) EXISTING UCV
- (B) EXISTING GROUND BOX (TY D)
- (#) CONDUIT RUN NUMBER (SEE CONDUIT SUMMARY)
- PROPOSED CONDUIT SCHD 40 PVC
- PROPOSED DUCT BANK
- EXISTING DUCT BANK
- EXISTING CONDUIT
- EXISTING GROUND BOX
- PROPOSED UCV
- PROPOSED GROUND BOX (TY D)
- TRAFFIC DIRECTION/TRAVEL LANE
- PROPOSED DITCH ℄

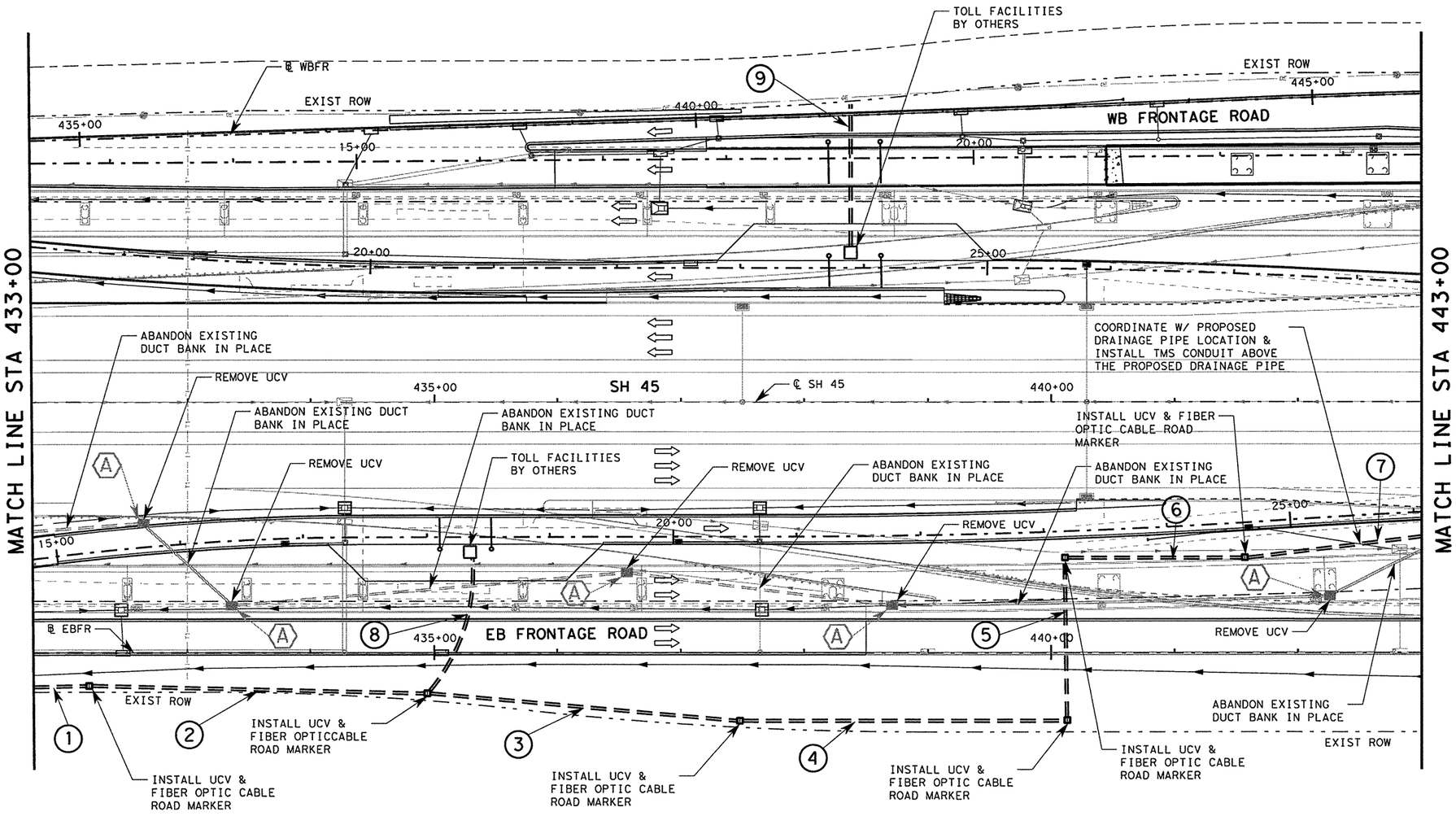

CONDUIT SUMMARY													
	DESCRIPTION	RUN NO.	1	2	3	4	5	6	7	8	9	10
		RUN LENGTH (FT)	45	270	250	260	130	140	145	120	120	
CONDUIT	DUCT BANK (12-2")		1	1	1	1	1	1	1			
	CONDT (PVC) (SCHD 40) (2") *									2	2	
	CONDT (PVC) (SCHD 40) (3") *											
	CONDT (PVC) (SCHD 40) (4") *											
	CONDT (RM) (3") *											
	14" STEEL CASING BORE											

* CONTRACTOR MAY UTILIZE HDPE CONDUIT IN PLACE OF PVC AND RMC.

SUMMARY OF TRAFFIC MANAGEMENT SYSTEM QUANTITIES				
ITEM	CODE	DESCRIPTION	UNIT	QTY
618	2018	CONDT (PVC) (SCHD 40) (2")	FT	480
618	2024	CONDT (PVC) (SCHD 40) (4")	LF	0
624	2014	GROUND BOX TY D (162922) W/APRON	EA	0
624	2034	REMOVE EXISTING GROUND BOXES	EA	0
6014	2037	FIBER OPTIC CABLE ROAD MARKER	EA	6
8774 ~~6000~~	2001	SYSTEM LOOP DETECTOR	EA	0
8368	2006	GROUND BOX (INSTALL)	EA	0
~~6749~~ 1001		UCV	EA	6
~~6749~~ 1002		UCV (REMOVE)	EA	5
~~6749~~ 1003		UCV (ADJUST)	EA	0
~~6752~~ 2001		DUCT BANK (12-2")	LF	1240

Rev. 6/29/11

STATE OF TEXAS
CESAR R. NEVAREZ
106199
LICENSED PROFESSIONAL ENGINEER
Cesar R. Nevarez, P.E.
6.20.2011

REV. No.	DATE	REVISION	BY
△			
△			
△			

PBSJ an Atkins company TBPE REG. # F-474

Texas Department of Transportation Austin District

©2011 by TxDOT

SH 45 / O'CONNOR DRIVE TRAFFIC MANAGEMENT SYSTEM LAYOUT STA 433+00 TO 443+00

SCALE: 1"=100' SHEET 6 OF 7

DESIGNED: RVP	FED. RD DIV. No.	STATE	PROJECT No.			HIGHWAY No.
CHECKED: SED	6	TEXAS				LP 1/SH 45
DRAWN: RVP	STATE DISTRICT	COUNTY	CONTROL No.	SECTION No.	JOB No.	SHEET No.
CHECKED: SED	AUSTIN	WILLIAMSON	0683	06	027	542

PLOT DRIVER: RD*11x17*B&W.plt
PEN TABLE: plotordr*ocon.tbl
FILE: r:\trans-design\o'connor\cadd\TMS\OC45TMS06.dgn

DATE: 6/20/2011 TIME: 2:51:06 PM

NOTES:

1. UTILITIES SHOWN ARE PROVIDED FOR INFORMATIONAL PURPOSES ONLY AND SHOULD BE FIELD VERIFIED PRIOR TO CONSTRUCTION.

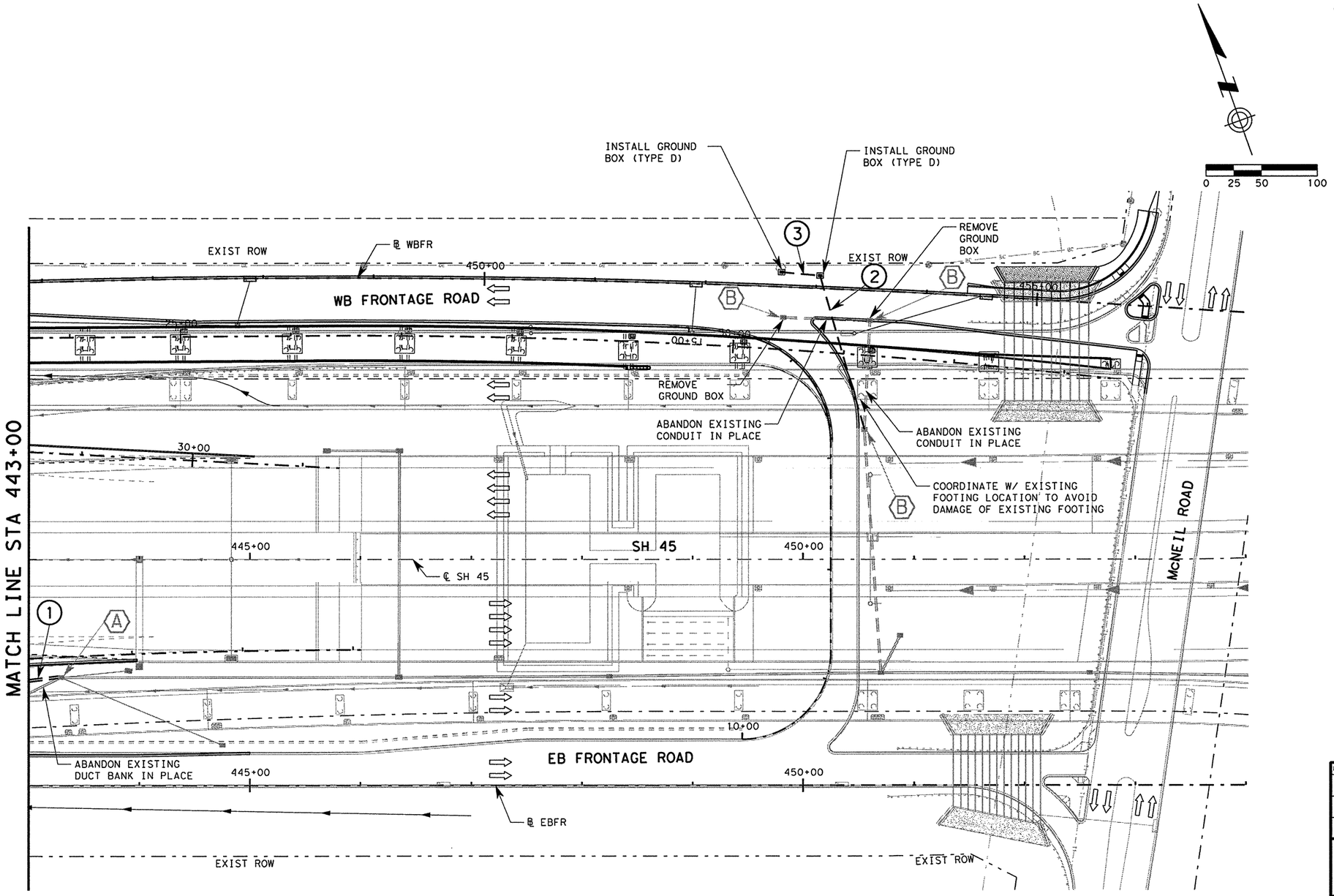

LEGEND

- (A) EXISTING UCV
- (B) EXISTING GROUND BOX (TY D)
- (#) CONDUIT RUN NUMBER (SEE CONDUIT SUMMARY)
- PROPOSED CONDUIT SCHD 40 PVC
- PROPOSED DUCT BANK
- EXISTING DUCT BANK
- EXISTING CONDUIT
- EXISTING GROUND BOX
- PROPOSED UCV
- PROPOSED GROUND BOX (TY D)
- TRAFFIC DIRECTION/TRAVEL LANE
- PROPOSED DITCH ℄

CONDUIT SUMMARY												
	DESCRIPTION	RUN NO.	1	2	3	4	5	6	7	8	9	10
		RUN LENGTH (FT)	30	140	55							
CONDUIT	DUCT BANK (12-2")		1									
	CONDT (PVC) (SCHD 40) (2") *											
	CONDT (PVC) (SCHD 40) (3") *											
	CONDT (PVC) (SCHD 40) (4") *			4	4							
	CONDT (RM) (3") *											
	14" STEEL CASING BORE											

* CONTRACTOR MAY UTILIZE HDPE CONDUIT IN PLACE OF PVC AND RMC.

SUMMARY OF TRAFFIC MANAGEMENT SYSTEM QUANTITIES				
ITEM	CODE	DESCRIPTION	UNIT	QTY
618	2018	CONDT (PVC) (SCHD 40) (2")	FT	0
618	2024	CONDT (PVC) (SCHD 40) (4")	LF	780
624	2014	GROUND BOX TY D (162922) W/APRON	EA	2
624	2034	REMOVE EXISTING GROUND BOXES	EA	2
6014	2037	FIBER OPTIC CABLE ROAD MARKER	EA	0
8774 ~~6020~~	2001	SYSTEM LOOP DETECTOR	EA	0
8368	2006	GROUND BOX (INSTALL)	EA	0
6749	2001	UCV	EA	0
6749	2002	UCV (REMOVE)	EA	0
6749	2003	UCV (ADJUST)	EA	0
6752	2001	DUCT BANK (12-2")	LF	30

Rev. 6/29/11

STATE OF TEXAS
CESAR R. NEVAREZ
106199
LICENSED
PROFESSIONAL ENGINEER

Cesar R. Nevarez, P.E.
6.20.2011

REV. NO.	DATE	REVISION	BY
△			
△			
△			

PBSJ an Atkins company TBPE REG. # F-474

Texas Department of Transportation
Austin District
©2011 by TxDOT

SH 45 / O'CONNOR DRIVE TRAFFIC MANAGEMENT SYSTEM LAYOUT STA 443+00 TO 454+00

SCALE: 1"=100' SHEET 7 OF 7

DESIGNED: RVP	FED. RD DIV. No.	STATE	PROJECT No.			HIGHWAY No.
CHECKED: SED	6	TEXAS				LP 1/SH 45
DRAWN: RVP	STATE DISTRICT	COUNTY	CONTROL No.	SECTION No.	JOB No.	SHEET No.
CHECKED: SED	AUSTIN	WILLIAMSON	0683	06	027	543

PLOT DRIVER: RD*11x17*B&W.plt
PEN TABLE: plotordr*ocon.tbl
FILE: r:\trans-design\o'connor\cadd\TMS\OC45TMS07.dgn

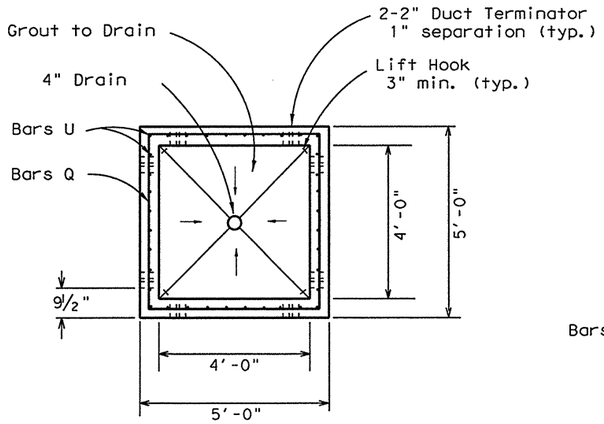

Section C-C

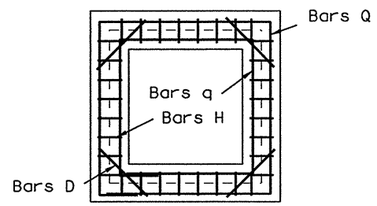

Top Reinforcement

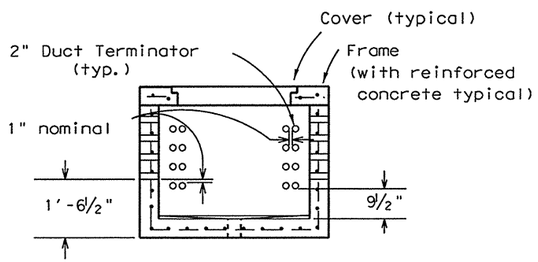

Section B-B

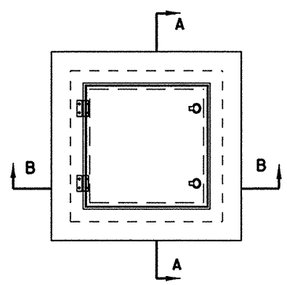

Plan View

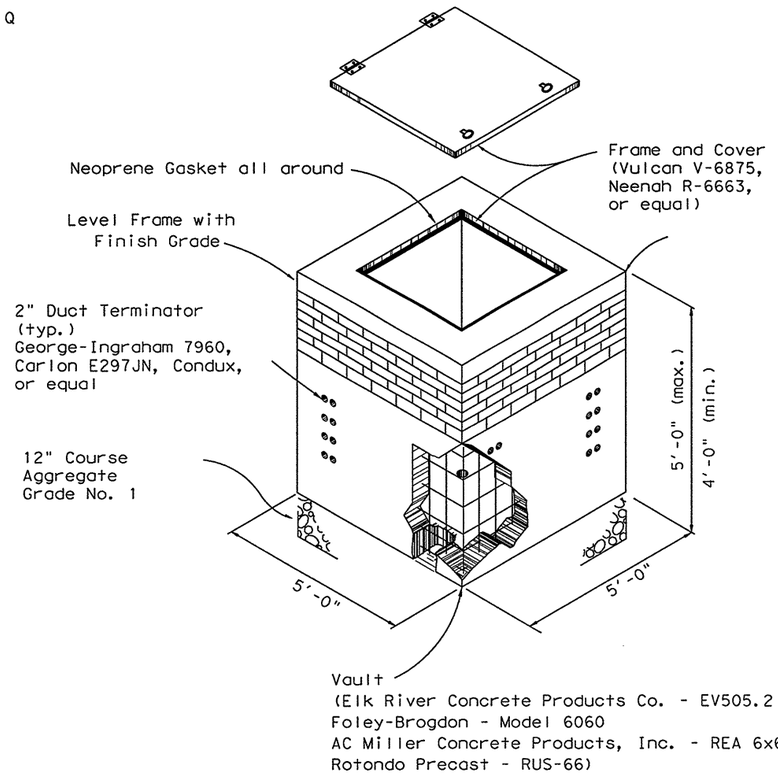

Notes

Mark cover clearly and permanently with word "COMMUNICATION". Provide Underground Cable Vault with a self draining bolting system that will secure cover positively in place. Provide double hinged cover. Provide hinges operating freely for 180 degrees. Provide cover with drop handles.

Provide frame with a neoprene seal measuring ¾" wide and 3/16" thick. Bond seal firmly to the frame, which accomodates the cover, by a bonding agent. Provide seal the entire length of each side of the frame contracting cover.

Install duct terminators in walls at the time of fabrication. Offset duct terminators on adjacent walls as shown. Plug duct terminators on the inside walls and cap duct terminators on the outside walls. Refer to the specifications for additional details.

Provide duct terminations flush with the inside surface of walls. Install pull cords in unused ducts for the entire length of duct run. Refer to duct bank for additional information.

Bond metal covers to the electrical system ground. Refer to specifications and electrical details for additional information.

Place Underground Cable Vault level to facilitate drainage. Place frame normal to surrounding slopes. Modify slopes as provided elsewhere in the plans. Refer to specifications for complete requirements.

Chamfer exposed corners to ¾".

Provide material indicated on this sheet conforming to the pertinent requirements of item 5, "Control of the work" and item 6, "Control of Materials".

Refer to applicable requirements of CONCRETE GROUND BOX (TYPE J) FOR TRAFFIC MANAGEMENT SYSTEMS for additional information.

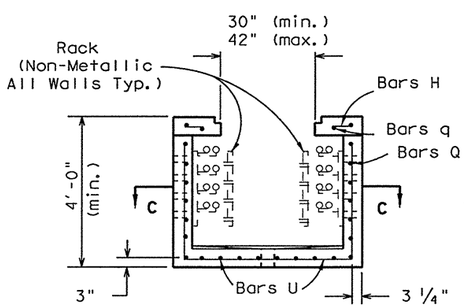

Section A-A

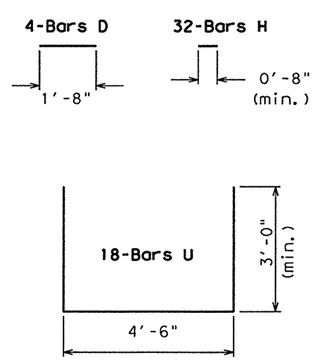

BAR SCHEDULE

(All bars #4)
(6" o.c. typical)

NO SCALE

Rev. 6/29/11

STATE OF TEXAS
CESAR R. NEVAREZ
106199
LICENSED
PROFESSIONAL ENGINEER

Cesar R. Nevarez, P.E.
6·20·2011

REV. No.	DATE	REVISION	BY
△			
△			
△			

PBSJ
an Atkins company
TBPE REG. # F-474

Texas Department of Transportation
Austin District
©2011 by TxDOT

SH 45 / O'CONNOR DRIVE TRAFFIC MANAGEMENT DETAILS UNDERGROUND CABLE VAULT

SCALE: NTS

SHEET 1 OF 2

DESIGNED: TMB	FED. RD DIV. No.	STATE	PROJECT No.		HIGHWAY No.	
CHECKED: CRN	6	TEXAS			LP 1/SH 45	
DRAWN: TMB	STATE DISTRICT	COUNTY	CONTROL No.	SECTION No.	JOB No.	SHEET No.
CHECKED: CRN	AUSTIN	WILLIAMSON	0683	06	027	543A

DATE: 6/20/2011 TIME: 2:51:07 PM
PLOT DRIVER: RD*11x17*B&W.plt
PEN TABLE: plotordr*ocon.tbl
FILE: r:\trans-design\o'connor\cadd\tms\OC45TMS08.dgn

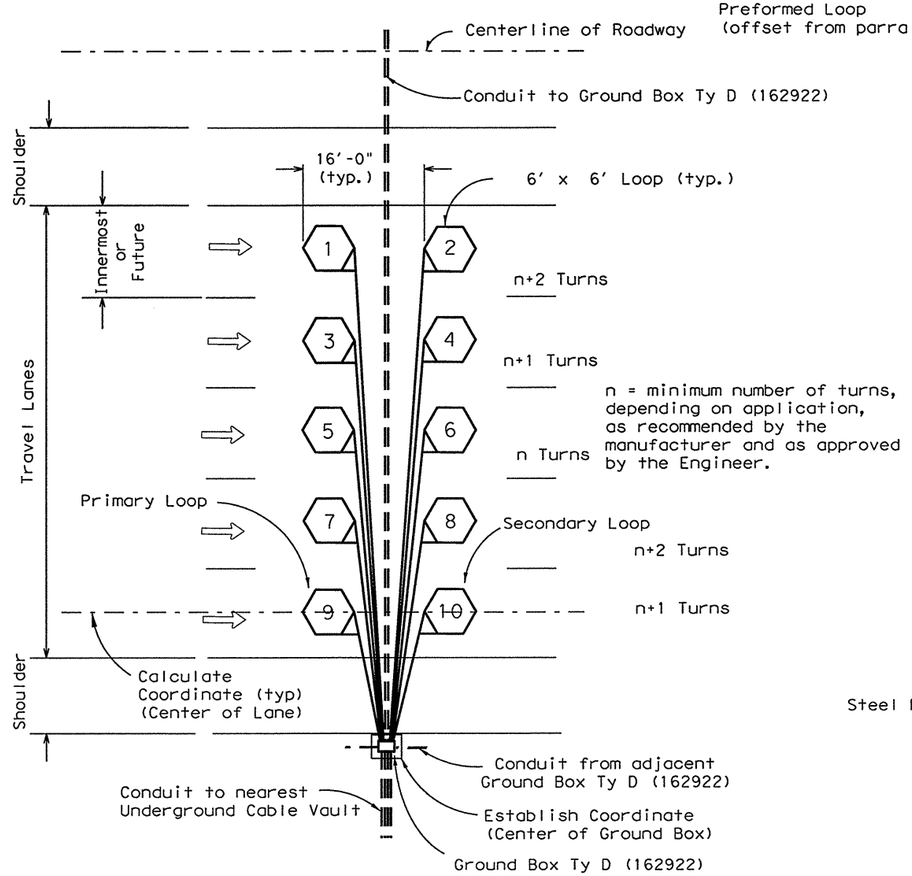

Typical Detector Group Layout

(symmetric about centerline)

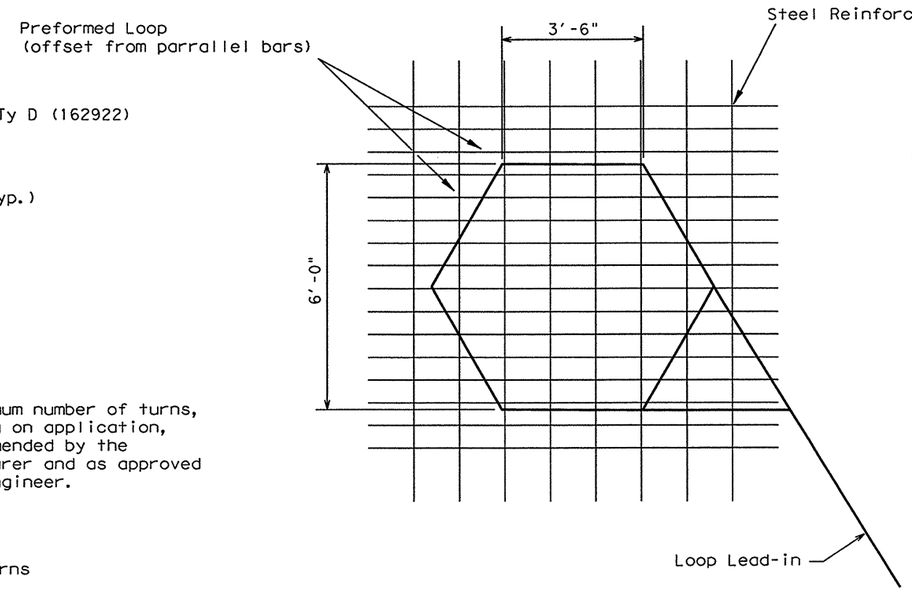

Plan

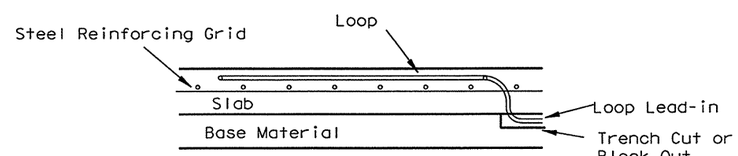

Section

Steel Reinforced Slabs

Installation Notes

When loop wires and loop lead-in installation are incorporated into pavement placement operations, encase them in conduit, as approved by the Engineer. Seal all connections to prevent moisture penetration.

Test the loop installations no more than twenty-four hours before and after pavement placement operations. Deliver copies of test reports to the Director of Transportation Operations priopr to payment.

Do not subject conduit installation to steel tracked vehicles.

Do not place loops across pavement control or construction joints.

Connect all loops to separate loop lead wire.

Label all loop lead wires.

Provide bushings in accordance with the National Electric Code.

Seal the conduit in which the loop wire is encased from the entry of moisture and debris. If conduit is plugged with any material, fill the conduit with the same material for its entire length. Use of tape is not acceptable.

Keep each loop wire and its lead-in wires separate and independent from one another. Do not place loop wire sand their lead-in wire adjacent to one another unless shielded or encased in a separate conduit.

Refer to specifications for additional requirements.

When using saw cuts to install loops, follow the recommended procedures described i nthe FHWA "Traffic Detector Handbook", latest edition. For additional information refer to FHWA "Traffic Detector Handbook".

Use conduit encased loops in a minimum saw cut depth of 4 inches in existing pavement locations.

Refer to STANDARD PLANS LOOP DETECTOR INSTALLATION DETAILS for additional saw cut details.

Items indicated on this sheet shall conform to the pertinent requirements of item 5, "Control of the Work" and item 6, "Control of Materials".

STATE OF TEXAS
CESAR R. NEVAREZ
106199
LICENSED PROFESSIONAL ENGINEER

Cesar R. Nevarez PE
6-20-2011

	Group Type	Block	Cardinal Direction	Loop No.	Loop Type	End Type
Range	Freeway Entrance Ramp Exit Ramp Service Road	Nearest 100	Northbound Southbound Eastbound Westbound	Numeric	Trap Non-Trap	Lead Tail
Label	F, E, X, S	000 to 999	N, S, E, W	0 to 24	T or N	L or T

Detector Loop Labeling

Example: F-075-S-5-T-L

Freeway loop at the 7500 block of the roadway in the southbound lane, number five, trap, lead loop lead-in.

Six digit task numbers for TxDOT personnel typically consist of the first five characters of the label followed by the last digit of the fiscal year.

NO SCALE

Rev. 6/29/11

REV. No.	DATE	REVISION	BY
△			
△			
△			

PBSJ an Atkins company TBPE REG. # F-474

Texas Department of Transportation
Austin District
©2011 by TxDOT

SH 45 / O'CONNOR DRIVE TRAFFIC MANAGEMENT DETAILS DETECTOR LOOP INSTALLATION

SCALE: NTS SHEET 2 OF 2

DESIGNED: TMB	FED. RD DIV. No.	STATE	PROJECT No.			HIGHWAY No.	
CHECKED: CRN	6	TEXAS				LP 1/SH 45	
DRAWN: TMB	STATE DISTRICT	COUNTY	CONTROL No.	SECTION No.	JOB No.	SHEET No.	
CHECKED: CRN	AUSTIN	WILLIAMSON	0683	06	027	543B	

DATE: 6/20/2011 TIME: 2:51:07 PM
PLOT DRIVER: RDx11x17xB&W.plt
PEN TABLE: plotord*ocon.tbl
FILE: r:\trans-design\o'connor\cadd\tms\OC45TMS09.dgn

NOTE:
1. INTERSECTION NEEDS SIGNAL STUDY PERFORMED WHILE SIGNAL IS IN FLASH. DO NOT FULLY ACTIVATE UNTIL THERE IS CONFIRMATION THE SIGNAL IS WARRANTED AND AUTHORIZED. FLASH RED PHASES OL A, 5, & OL B. FLASH YELLOW PHASES 4 & 8.

TRAFFIC POLE LOCATIONS		
POLE	STATION	OFFSET
P1	411+66.25	16.06' LT
P2	410+36.50	13.50' LT
P3	410+52.44	63.82' RT
P6	410+51.96	14.75' LT

TRAFFIC SIGNALS SUMMARY				
ITEM	DESC	DESCRIPTION	UNIT	QTY
416	2032	DRILL SHAFTS (TRF SIG POLE) (36 IN)	LF	57
420	2051	CL C CONC (COLUMN)	CY	25.1
618	2034	CONDT (PVC) (SCHD 80) (2")	LF	540
618	2038	CONDT (PVC) (SCHD 80) (3")	LF	1955
620	2009	ELEC CONDR (NO. 6) BARE	LF	2495
620	2010	ELEC CONDR (NO. 6) INSULATED	LF	1300
624	2014	GROUND BOX TY D (162922) W/ APRON	EA	6
628	2232	ELC SRV TY D 120/240 070 (NS)AL(E)SP(O)	EA	1
680	2002	INSTALL HWY TRF SIG (ISOLATED)	EA	1
682	2022	VEH SIG SEC (12 IN) LED (GRN ARW)	EA	1
682	2023	VEH SIG SEC (12 IN) LED (GRN)	EA	8
682	2024	VEH SIG SEC (12 IN) LED (YEL ARW)	EA	1
682	2025	VEH SIG SEC (12 IN) LED (YEL)	EA	8
682	2027	VEH SIG SEC (12 IN) LED (RED)	EA	8
682	2045	BACK PLATE (12 IN) (3 SEC) ALUM	EA	7
682	2047	BACK PLATE (12 IN) (5 SEC) ALUM	EA	1
684	2031	TRF SIG CBL (TY A) (14 AWG) (5 CONDR)	LF	2155
684	2033	TRF SIG CBL (TY A) (14 AWG) (7 CONDR)	LF	65
684	2080	TRF SIG CBL (TY C) (14 AWG) (2 CONDR)	LF	875
686	2045	INS TRF SIG PL AM (S) 1 ARM (44') LUM	EA	2
686	2049	INS TRF SIG PL AM (S) 1 ARM (48') LUM	EA	1
6266	2001	VIVDS PROCESSOR SYS	EA	2
6266	2002	VIVDS CAMERA ASSEMBLY	EA	4
6266	2003	VIVDS SET-UP SYSTEM	EA	1
6266	2005	VIVDS COMMUNICATION CABLE (COAXIAL)	LF	2005
8609		HARDENED ETHERNET SWITCH TYPE 1	EA	1
8681		5.8 GHZ WIRELESS ETHERNET RADIO (DUAL BND)	EA	1
*SUB TO 8681		ETHERNET CABLE CAT-5	LF	65

* FOR CONTRACTOR'S INFORMATION ONLY

ADA SUMMARY				
687	2001	PED POLE ASSEMBLY	EA	1
		AUDIBLE PEDESTRIAN SIGNAL UNITS	EA	2
		LED COUNTDOWN PED SIGNAL MODULE	EA	2

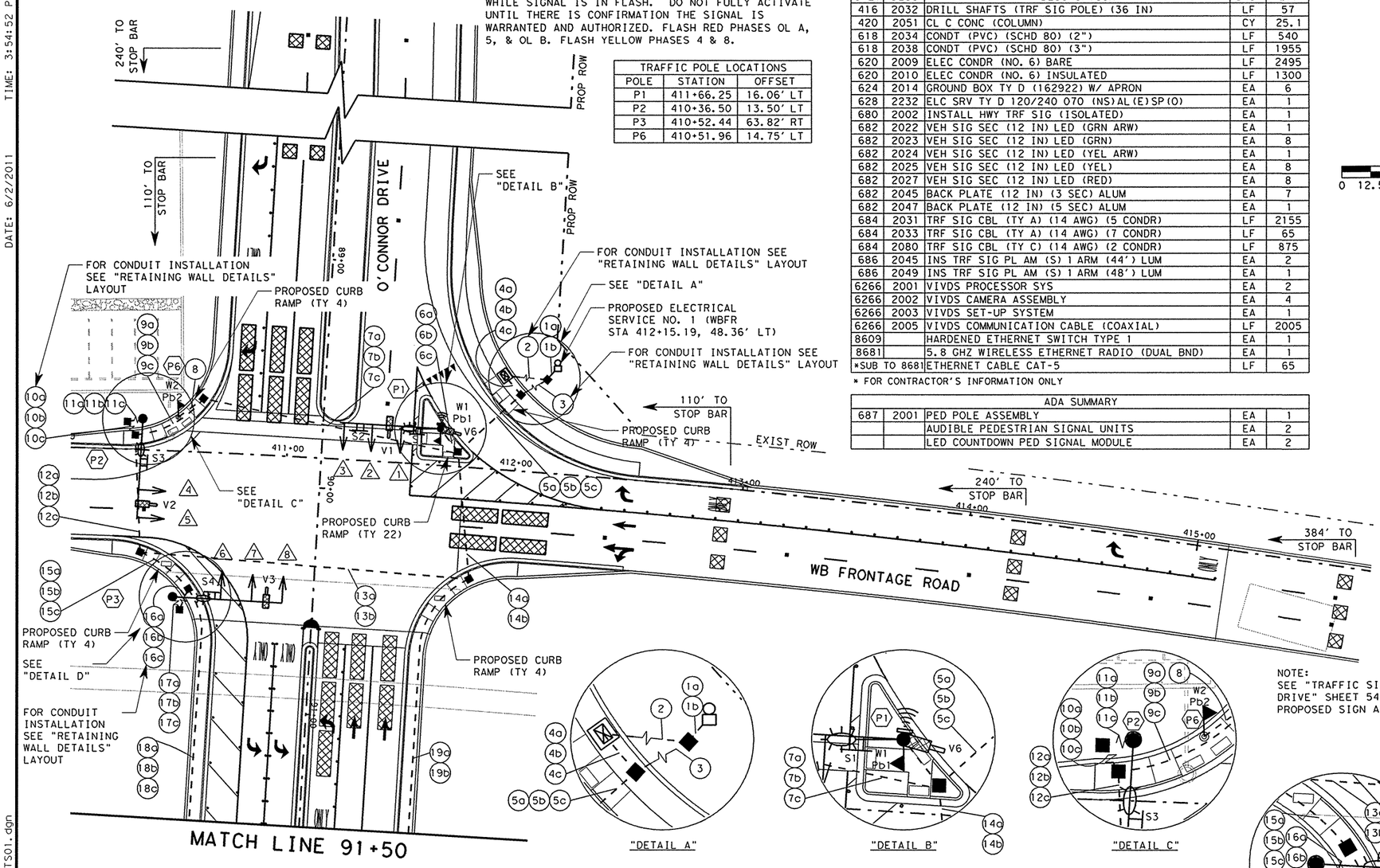

NOTE:
SEE "TRAFFIC SIGNAL LAYOUT O'CONNOR DRIVE" SHEET 545 (SHEET 2 OF 2) FOR PROPOSED SIGN AND SIGNAL HEAD DETAILS.

LEGEND

- POLE NUMBER
- CONDUIT NUMBER
- TRAFFIC SIGNAL HEAD NUMBER
- PROPOSED SIGNAL HEAD
- PROPOSED VIVDS CAMERA
- PROPOSED MAST ARM AND SIGNAL POLE
- PROPOSED PEDESTRIAN POLE ASSEMBLY
- PROPOSED PEDESTRIAN SIGAL HEAD, PUSH BUTTON AND SIGN
- PROPOSED LUMINAIRE
- PROPOSED GROUND BOX
- PROPOSED CONTROLLER CABINET
- PROPOSED ELECTRICAL SERVICE
- PROPOSED SIGNAL CONDUIT
- PROPOSED SIGNAL CONDUIT IN CTB
- PROPOSED MAST ARM-MOUNTED SIGN
- PROPOSED VIVDS DETECTION ZONE (6' X 6')
- PROPOSED VIVDS DETECTION ZONE (6' X 20')
- BROADBAND RADIO/ANTENNA (SUBSIDIARY TO ITEM 8681)

ELECTRICAL SERVICE DATA												
ELEC. SERVICE NO.	SHEET	ELECTRICAL SERVICE DESCRIPTION (SEE ED (4))	SERVICE CONDUIT SIZE (RMC)	SERVICE CONDUCTORS NO./SIZE	SAFETY SWITCH AMPS	MAIN DISCONNECT CKT. BRK. POLE/AMP	TWO-POLE CONTRACTOR AMPS	PANEL BD./ LOAD CENTER AMP RATING (MIN)	CIRCUIT NO.	BRANCH CKT. BRK. POLE/AMPS	KVA LOAD
1	TRAFFIC SIGNAL LAYOUT O'CONNOR DRIVE SHEET 1 OF 2	TY D (120/240) 070 (NS) AL (E) SP (O)	1-1/4"	3/#4	N/A	2P/70	30	100	T.S.	1P/50 2P/15	< 7.1

CONDUIT TABLE

	DESCRIPTION	RUN NO.	1a	1b	2	3	4a	4b	4c	5a	5b	5c	6a	6b	6c	7a	7b	7c	8	9a	9b	9c	10a	10b	10c	11a	11b	11c	12a	12b	12c	13a*	13b*	14a*	14b*	15a	15b	15c	16a	16b	16c	17a	17b	17c	18a	18b	18c	19a*	19b*
		LENGTH (FT)	5	5	35	35	10	10	10	40	40	40	15	15	15	115	115	115	15	35	35	35	40	40	40	40	40	40	75	75	75	145	145	60	60	25	25	25	40	40	40	40	40	40	105	105	105	125	125
CONDUIT	CONDT (PVC) (SCHD 80) (2")		1	1	1	1	1			1			1			1				1									1							1			1						1				
	CONDT (PVC) (SCHD 80) (3")							1	1		1	1		1	1		1	1	1		1	1	1	1	1	1	1	1		1	1	1	1	1	1		1	1		1	1	1	1	1		1	1	1	1
	ELEC CONDR (NO. 6) BARE		1	1	1	1	1	1	1	1	1	1	1	1	1	1	1	1	1	1	1	1	1	1	1	1	1	1	1	1	1	1	1	1	1	1	1	1	1	1	1	1	1	1	1	1	1	1	1
	ELEC CONDR (NO. 6) INSULATED		2	2	2	2				2			2			2				2			2			2			2							2			2			2			2				
	TRF SIG CBL (TY A) (14 AWG) (2 CONDR)							6			6			2			3		2		1								1					1															
	TRF SIG CBL (TY A) (14 AWG) (5 CONDR)							9			9			2			6		2		2			2			2			4				1			3			1			1			2			
	TRF SIG CBL (TY A) (14 AWG) (7 CONDR)							1			1			1																																			
	VIVDS COMMUNICATION CABLE (COAXIAL)								7			7			2			5				5			1			1			4							4			1			1			3		
	ETHERNET CABLE CAT-5								1			1			1																																		

* CONDUIT FOR FUTURE USE

STATE OF TEXAS
RENE U. GARZA
65409
REGISTERED PROFESSIONAL ENGINEER

Rene U Garza PE
6/3/11

REV. No.	DATE	REVISION	BY
△			
△			
△			

PBSJ
an Atkins company
TBPE REG. # F-474

Texas Department of Transportation
Austin District
©2011 by TxDOT

SH 45 / O'CONNOR DRIVE TRAFFIC SIGNAL LAYOUT O'CONNOR DRIVE

SCALE: 1"=50'
SHEET 1 OF 2

DESIGNED: CRN	FED. RD DIV. No.	STATE	PROJECT No.			HIGHWAY No.
CHECKED: RUG	6	TEXAS				LP 1/SH 45
DRAWN: CRN	STATE DISTRICT	COUNTY	CONTROL No.	SECTION No.	JOB No.	SHEET No.
CHECKED: RUG	AUSTIN	WILLIAMSON	0683	06	027	544

DATE: 6/2/2011 TIME: 3:54:52 PM

PLOT DRIVER: RD*11x17*PDF.plt
PEN TABLE: plotordr*ocon.tbl
FILE: r:\trans-design\o'connor\cadd\SIG\OC45TS01.dgn

ITEM	DESC	DESCRIPTION	UNIT	QTY
416	2032	DRILL SHAFTS (TRF SIG POLE) (36 IN)	LF	44
420	2051	CL C CONC (COLUMN)	CY	19.2
618	2034	CONDT (PVC) (SCHD 80) (2")	LF	250
618	2038	CONDT (PVC) (SCHD 80) (3")	LF	2220
620	2009	ELEC CONDR (NO. 6) BARE	LF	2470
620	2010	ELEC CONDR (NO. 6) INSULATED	LF	1000
624	2014	GROUND BOX TY D (162922) W/ APRON	EA	2
682	2023	VEH SIG SEC (12 IN) LED (GRN)	EA	5
682	2025	VEH SIG SEC (12 IN) LED (YEL)	EA	5
682	2027	VEH SIG SEC (12 IN) LED (RED)	EA	5
682	2045	BACK PLATE (12 IN) (3 SEC) ALUM	EA	5
684	2031	TRF SIG CBL (TY A) (14 AWG) (5 CONDR)	LF	750
686	2041	INS TRF SIG PL AM (S) 1 ARM (40') LUM	EA	1
686	2045	INS TRF SIG PL AM (S) 1 ARM (44') LUM	EA	1
6266	2002	VIVDS CAMERA ASSEMBLY	EA	3
6266	2005	VIVDS COMMUNICATION CABLE (COAXIAL)	LF	1175

TRAFFIC POLE LOCATIONS		
POLE	STATION	OFFSET
P4	409+98.60	6.00' RT
P5	411+09.60	6.00' RT

PHASING DIAGRAM

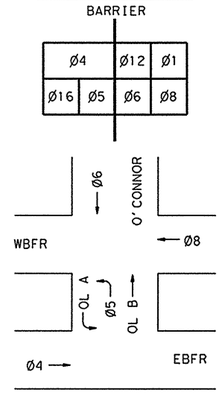

OL B = Ø5, Ø6
OL A = Ø6, Ø8

PROPOSED SIGN DETAILS

S3, S6

1.5" Radius, 0.5" Border, White on Green;
[O'Connor] ClearviewHwy-2-W; [Dr] ClearviewHwy-2-W;

S1, S4, S5

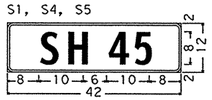

1.5" Radius, 0.5" Border, White on Green;
[SH 45] ClearviewHwy-2-W;

R10-12 (SPEC)
36"X36"
S2

R3-8
30"X30"
S7

R10-3e (9"X15")
W/ PEDESTRIAN
PUSH BUTTON
Pb2

R10-3e (9"X15")
W/ PEDESTRIAN
PUSH BUTTON
Pb1

"DETAIL E"

PROPOSED SIGNAL HEAD DETAILS

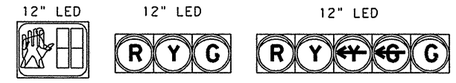

W1, W2 — 1,2,4,5,6,7,8, 9,10,11,12,13 — 3

NOTE:
1. INTERSECTION NEEDS SIGNAL STUDY PERFORMED WHILE SIGNAL IS IN FLASH. DO NOT FULLY ACTIVATE UNTIL THERE IS CONFIRMATION THE SIGNAL IS WARRANTED AND AUTHORIZED. FLASH RED PHASES OL A, 5, & OL B. FLASH YELLOW PHASES 4 & 8.

0 12.5 25 50

LEGEND

- POLE NUMBER
- CONDUIT NUMBER
- TRAFFIC SIGNAL HEAD NUMBER
- PROPOSED SIGNAL HEAD
- PROPOSED VIVDS CAMERA
- PROPOSED MAST ARM AND SIGNAL POLE
- PROPOSED PEDESTRIAN POLE ASSEMBLY
- PROPOSED PEDESTRIAN SIGAL HEAD, PUSH BUTTON AND SIGN
- PROPOSED LUMINAIRE
- PROPOSED GROUND BOX
- PROPOSED CONTROLLER CABINET
- PROPOSED ELECTRICAL SERVICE
- PROPOSED SIGNAL CONDUIT
- PROPOSED SIGNAL CONDUIT IN CTB
- PROPOSED MAST ARM-MOUNTED SIGN
- PROPOSED VIVDS DETECTION ZONE (6' X 6')
- PROPOSED VIVDS DETECTION ZONE (6' X 20')
- BROADBAND RADIO/ANTENNA (SUBSIDIARY TO ITEM 8681)

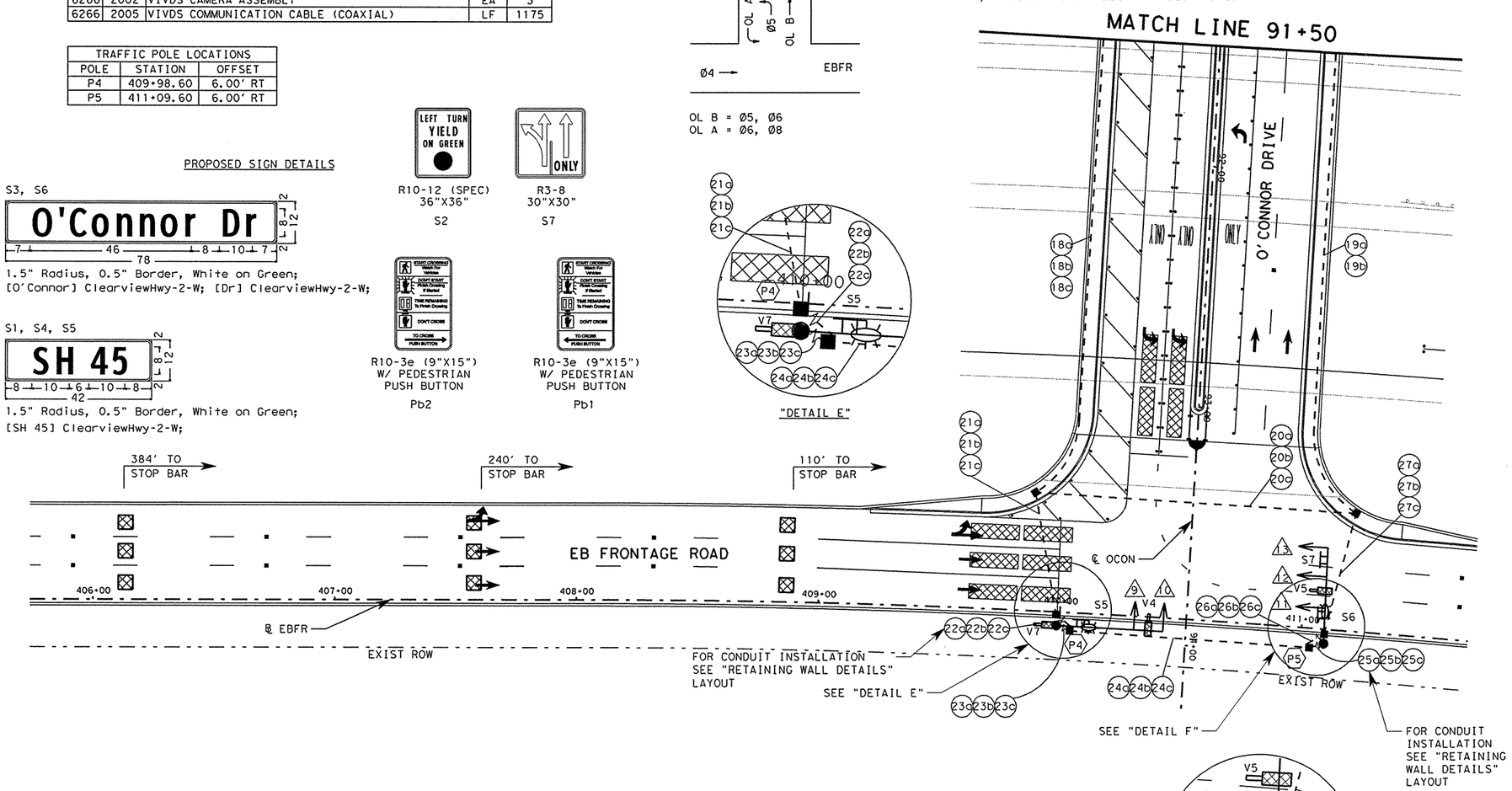

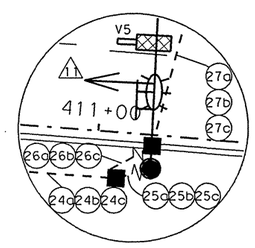

"DETAIL F"

STATE OF TEXAS
RENE U. GARZA
65409
REGISTERED PROFESSIONAL ENGINEER

Rene U. Garza PE
6/3/11

REV. No.	DATE	REVISION	BY
△			
△			
△			

PBSJ
an Atkins company
TBPE REG. # F-474

Texas Department of Transportation
Austin District
©2011 by TxDOT

SH 45 / O'CONNOR DRIVE TRAFFIC SIGNAL LAYOUT O'CONNOR DRIVE

SCALE: 1"=50'
SHEET 2 OF 2

DESIGNED: CRN	FED. RD DIV. No.	STATE	PROJECT No.			HIGHWAY No.
CHECKED: RUG	6	TEXAS				LP 1/SH 45
DRAWN: CRN	STATE DISTRICT	COUNTY	CONTROL No.	SECTION No.	JOB No.	SHEET No.
CHECKED: RUG	AUSTIN	WILLIAMSON	0683	06	027	545

CONDUIT TABLE

	DESCRIPTION	RUN NO.	18a	18b	18c	19a*	19b*	20a*	20b*	20c*	21a	21b	21c*	22a	22b	22c	23a	23b	23c	24a	24b	24c	25a	25b	25c	26a	26b	26c	27a*	27b*	27c*
		LENGTH (FT)	195	195	195	200	200	135	135	135	55	55	55	40	40	40	30	30	30	105	105	105	35	35	35	40	40	40	55	55	55
CONDUIT	CONDT (PVC) (SCHD 80) (2")		1								1																				
	CONDT (PVC) (SCHD 80) (3")			1	1	1	1	1	1	1		1	1	1	1	1	1	1	1	1	1	1	1	1	1	1	1	1	1	1	1
	ELEC CONDR (NO. 6) BARE		1	1	1	1	1	1	1	1	1	1	1	1	1	1	1	1	1	1	1	1	1	1	1	1	1	1	1	1	1
	ELEC CONDR (NO. 6) INSULATED		2								2			2			2			2			2			2					
	TRF SIG CBL (TY A) (14 AWG) (2 CONDR)																														
	TRF SIG CBL (TY A) (14 AWG) (5 CONDR)			2								2				1			1			1			1			1			
	TRF SIG CBL (TY A) (14 AWG) (7 CONDR)																														
	VIVDS COMMUNICATION CABLE (COAXIAL)				3							3					2			2		1	1			1			1		
	ETHERNET CABLE CAT-5																														

* CONDUIT FOR FUTURE USE

PLOT DRIVER: RD*11x17*PDF.plt
PEN TABLE: plotord*ocon.tbl
FILE: r:\trans-design\o'connor\cadd\SIG\OC45TS02.dgn
DATE: 6/2/2011 TIME: 3:54:55 PM

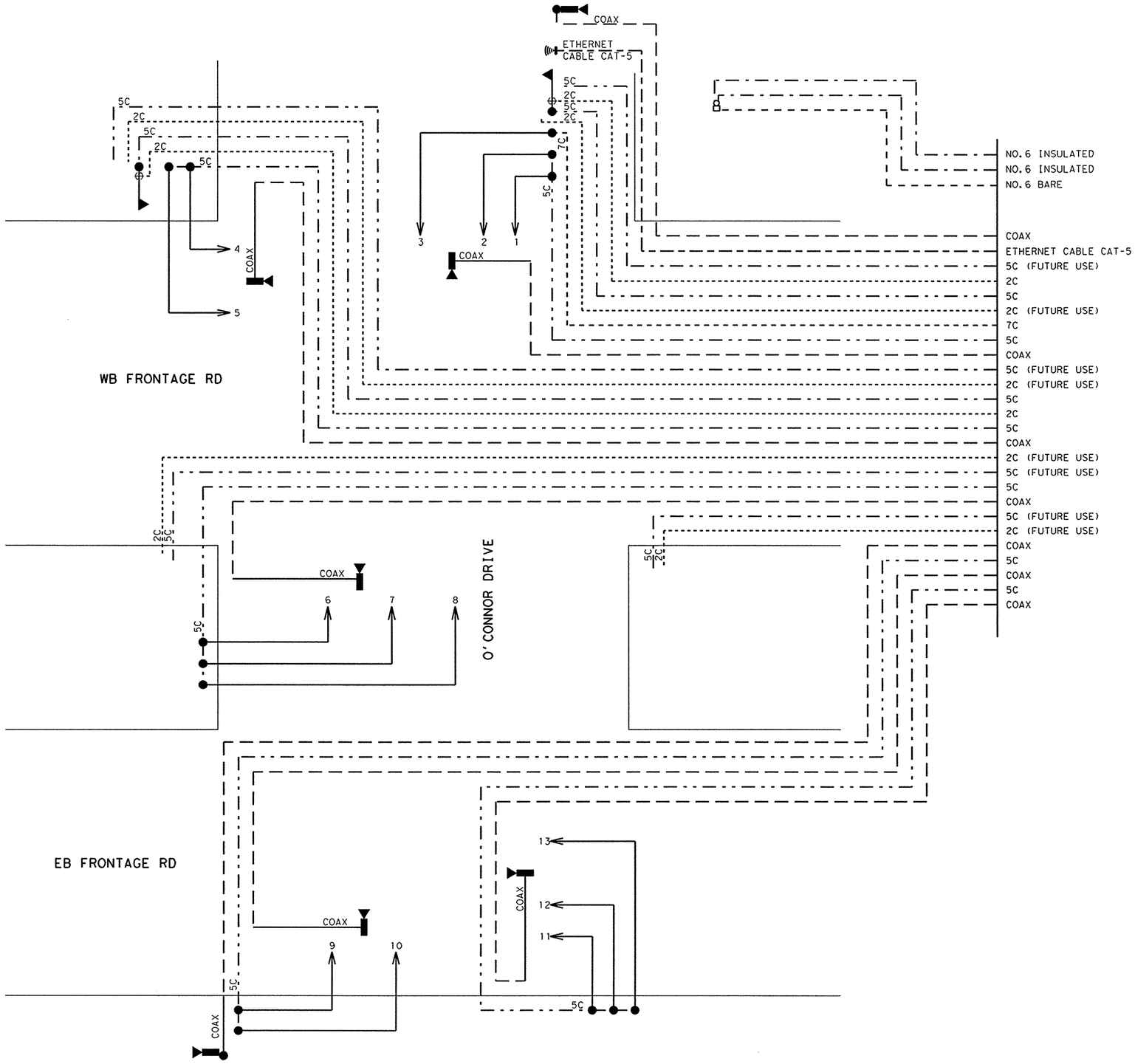

NOTES:

1. A #6 AWG (BARE) GROUND WIRE SHALL BE USED BETWEEN EACH SIGNAL POLE, VIVDS POLE, CONTROLLER CABINET, AND POWER SOURCE POLE.
2. EACH VIVDS CAMERA TO BE WIRED SEPARATELY UTILIZING COAXIAL CABLE AND 1-3C #12.
3. INSTALL 5.8 GHZ WIRELESS ETHERNET RADIO DUAL BND) IN CONTROLLER CABINET.
4. INSTALL BROADBAND RADIO/ANTENNA ON POLE 1.

LEGEND

- VEHICLE SIGNAL HEAD
- VIVDS CAMERA
- BROADBAND RADIO/ANTENNA (SUBSIDIARY TO ITEM 8681)
- WIRING IN CONDUIT
- WIRING IN MAST ARM
- SPLICE
- PROP. ELECTRICAL SERVICE

STATE OF TEXAS
RENE U. GARZA
65409
REGISTERED PROFESSIONAL ENGINEER

Rene U. Garza PE
4/11/11

REV. No.	DATE	REVISION	BY
△			
△			
△			

PBSJ
an Atkins company
TBPE REG. # F-474

Texas Department of Transportation
Austin District
©2011 by TxDOT

SH 45 / O'CONNOR DRIVE
WIRING DIAGRAM
O'CONNOR DRIVE

SCALE: NTS — SHEET 1 OF 1

DESIGNED: CRN	FED. RD DIV. No.	STATE	PROJECT No.			HIGHWAY No.	
CHECKED: RUG	6	TEXAS				LP 1/SH 45	
DRAWN: CRN	STATE DISTRICT	COUNTY	CONTROL No.	SECTION No.	JOB No.	SHEET No.	
CHECKED: RUG	AUSTIN	WILLIAMSON	0683	06	027	546	

DATE: 4/11/2011 TIME: 11:06:35 AM

PLOT DRIVER: RD*11x17*PDF.plt
PEN TABLE: plotordr*ocon.tbl
FILE: r:\trans-design\o'connor\cadd\SIG\0C45TS03.dgn

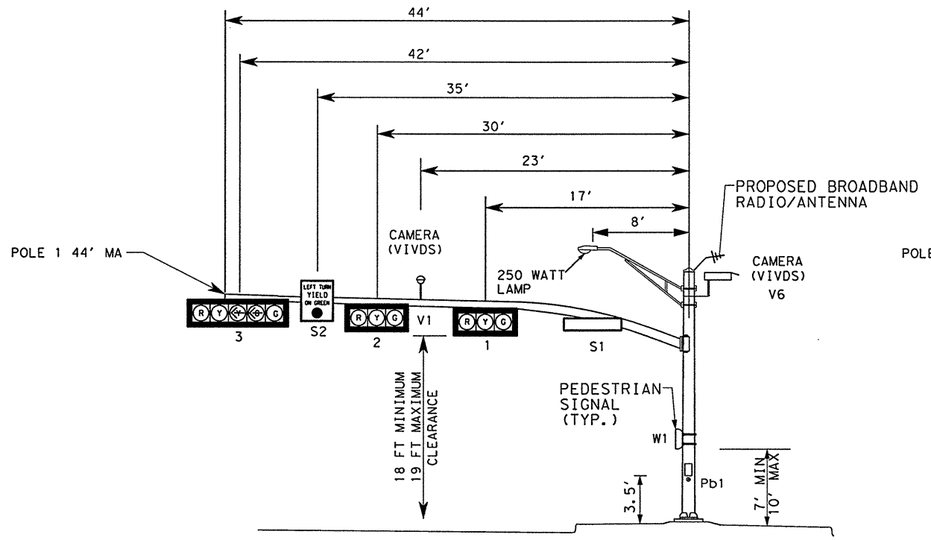

NORTHBOUND ON O'CONNOR DRIVE
NTS
POLE 1

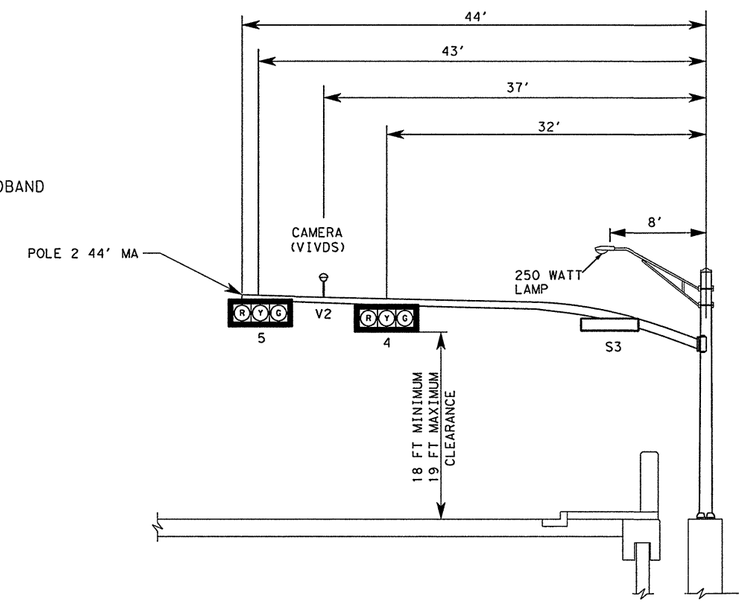

WESTBOUND ON SH 45 WBFR
NTS
POLE 2

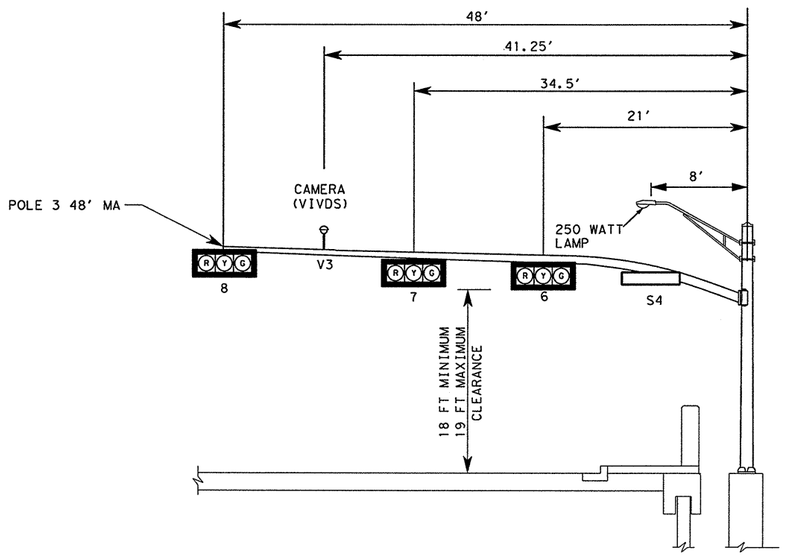

SOUTHBOUND O'CONNOR DRIVE TO WBFR
NTS
POLE 3

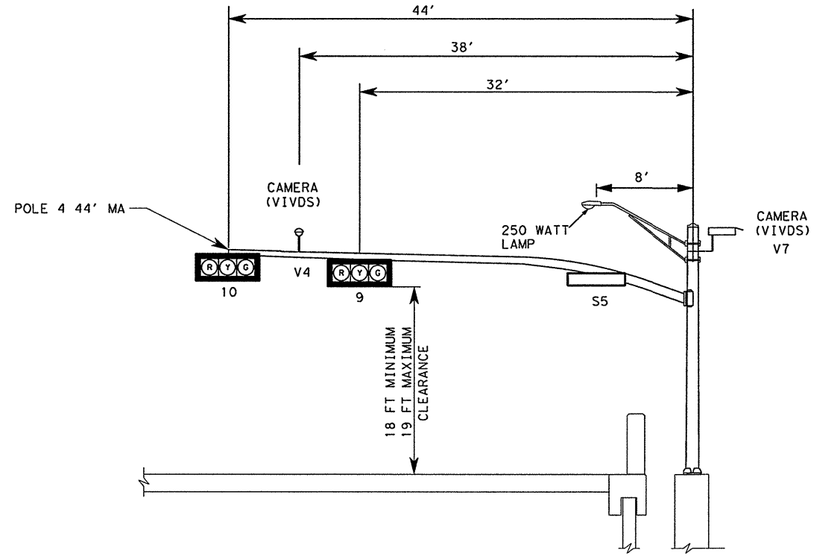

SOUTHBOUND O'CONNOR DRIVE TO EBFR
NTS
POLE 4

NOTES:

1. CENTER SIGNAL HEADS OVER THE LANES, OR AS DIRECTED BY THE ENGINEER.
2. DISTANCES ALONG MAST ARMS ARE APPROXIMATE.
3. LOCATIONS OF MAST ARMS AND POLES ARE APPROXIMATE. ANY CHANGES SHALL BE APPROVED BY THE ENGINEER.
4. CALCULATE SIGNAL HEAD HEIGHT IN THE FIELD. SUBJECT TO APPROVAL BY THE ENGINEER.
5. REFER TO "TRAFFIC SIGNAL" LAYOTS FOR SIGNAL HEAD AND SIGN TYPES.

STATE OF TEXAS
RENE U. GARZA
65409
REGISTERED PROFESSIONAL ENGINEER

Rene U Garza PE
4/11/11

REV. No.	DATE	REVISION	BY
△			
△			
△			

PBSJ
an Atkins company
TBPE REG. # F-474

Texas Department of Transportation
Austin District
©2011 by TxDOT

SH 45 / O'CONNOR DRIVE TRAFFIC SIGNAL ELEVATIONS O'CONNOR DRIVE

SCALE: NTS
SHEET 1 OF 2

DESIGNED: CRN	FED. RD DIV. No.	STATE	PROJECT No.			HIGHWAY No.	
CHECKED: RUG	6	TEXAS				LP 1/SH 45	
DRAWN: CRN	STATE DISTRICT	COUNTY	CONTROL No.	SECTION No.	JOB No.	SHEET No.	
CHECKED: RUG	AUSTIN	WILLIAMSON	0683	06	027	547	

DATE: 4/11/2011 TIME: 5:36:50 PM
PLOT DRIVER: RD*11x17*B&W.plt
PEN TABLE: plotordr*ocon.tbl
FILE: r:\trans-design\o'connor\cadd\SIG\OC45TS04.dgn

DATE: 4/11/2011 TIME: 11:06:37 AM

NOTES:

1. CENTER SIGNAL HEADS OVER THE LANES, OR AS DIRECTED BY THE ENGINEER.
2. DISTANCES ALONG MAST ARMS ARE APPROXIMATE.
3. LOCATIONS OF MAST ARMS AND POLES ARE APPROXIMATE. ANY CHANGES SHALL BE APPROVED BY THE ENGINEER.
4. CALCULATE SIGNAL HEAD HEIGHT IN THE FIELD. SUBJECT TO APPROVAL BY THE ENGINEER.
5. REFER TO "TRAFFIC SIGNAL" LAYOTS FOR SIGNAL HEAD AND SIGN TYPES.

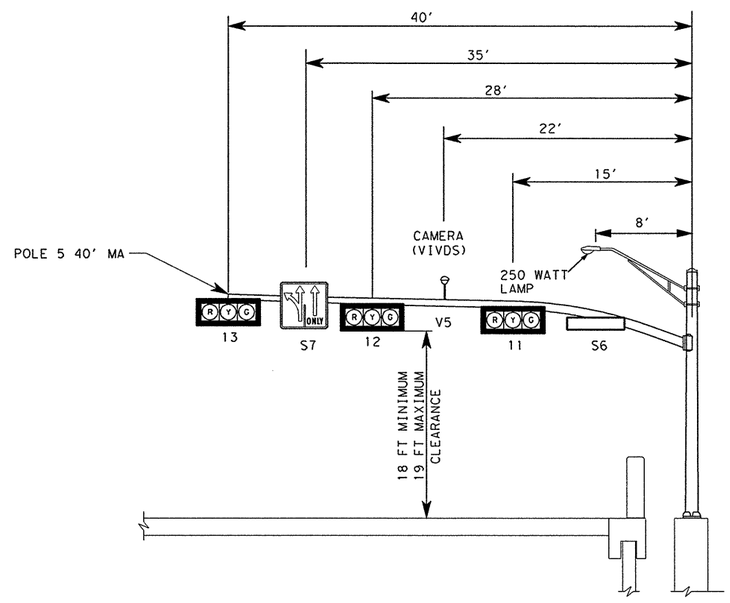

EASTBOUND ON SH 45 EBFR
NTS
POLE 5

STATE OF TEXAS
RENE U. GARZA
65409
REGISTERED
PROFESSIONAL ENGINEER

Rene U Garza PE
4/11/11

REV. NO.	DATE	REVISION	BY
△			
△			
△			

PBSJ
an Atkins company TBPE REG. # F-474

Texas Department of Transportation
Austin District
©2011 by TxDOT

SH 45 / O'CONNOR DRIVE TRAFFIC SIGNAL ELEVATIONS O'CONNOR DRIVE

SCALE: NTS SHEET 2 OF 2

DESIGNED: CRN	FED. RD DIV. No.	STATE	PROJECT No.			HIGHWAY No.	
CHECKED: RUG	6	TEXAS				LP 1/SH 45	
DRAWN: CRN	STATE DISTRICT	COUNTY		CONTROL No.	SECTION No.	JOB No.	SHEET No.
CHECKED: RUG	AUSTIN	WILLIAMSON		0683	06	027	548

PLOT DRIVER: RD*11x17*PDF.plt
PEN TABLE: plotordr*ocon.tbl
FILE: r:\trans-design\o'connor\cadd\SIG\OC45TS05.dgn

TIME: 3:54:59 PM
DATE: 6/2/2011

ELECTRICAL SERVICE DATA											
ELEC. SERVICE NO.	SHEET	ELECTRICAL SERVICE DESCRIPTION (SEE ED (4))	SERVICE CONDUIT SIZE (RMC)	SERVICE CONDUCTORS NO./SIZE	SAFETY SWITCH AMPS	MAIN DISCONNECT CKT. BRK. POLE/AMP	TWO-POLE CONTRACTOR AMPS	PANEL BD./ LOAD CENTER AMP RATING (MIN)	CIRCUIT NO.	BRANCH CKT. BRK. POLE/AMPS	KVA LOAD
2	TRAFFIC SIGNAL LAYOUT McNEIL ROAD SHEET 1 OF 1	TY D (120/240) 070 (NS) AL (E) SP (U)	1-1/2"	3/#4	N/A	2P/70	30	70	T.S.	1P/50 1P/20	< 4 MV

TRAFFIC SIGNALS SUMMARY				
ITEM	DESC	DESCRIPTION	UNIT	QTY
618	2034	CONDT (PVC) (SCHD 80) (2")	LF	229
618	2038	CONDT (PVC) (SCHD 80) (3")	LF	245
618	2039	CONDT (PVC) (SCHD 80) (3") (BORE)	LF	182
620	2007	ELEC CONDR (NO. 4) BARE	LF	188
620	2008	ELEC CONDR (NO. 4) INSULATED	LF	620
620	2011	ELEC CONDR (NO. 8) BARE	LF	468
620	2012	ELEC CONDR (NO. 8) INSULATED	LF	710
624	2014	GROUND BOX TY D (162922) W/ APRON	EA	2
624	2034	REMOVE EXISTING GROUND BOXES	EA	2
628	2158	REMOVE ELECTRICAL SERVICES	EA	1
628	2325	ELC SRV TY D 120/240 070 (NS)AL(E)SP(U)	EA	1
680	2002	INSTALL HWY TRF SIG (ISOLATED)	EA	1
684	2030	TRF SIG CBL (TY A) (14 AWG) (4 CONDR)	LF	315
684	2031	TRF SIG CBL (TY A) (14 AWG) (5 CONDR)	LF	402
684	2033	TRF SIG CBL (TY A) (14 AWG) (7 CONDR)	LF	315
6007	2001	REMOVING TRAFFIC SIGNALS	EA	1
6266	2005	VIVDS COMMUNICATION CABLE (COAXIAL)	LF	315
8368	2003	CONDUIT (PREPARE)	LF	165

ADA SUMMARY				
687	2001	PED POLE ASSEMBLY	EA	2
688	2001	PED DETECT (2 INCH PUSH BTN)	EA	2
690	2128	REMOVE PED POLE ASSEMBLY	EA	2

PED POLE LOCATIONS		
POLE	STATION	OFFSET
P1	455+90.77	50.04' RT
P2	456+02.73	6.49' RT

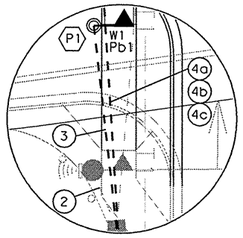

"DETAIL G"

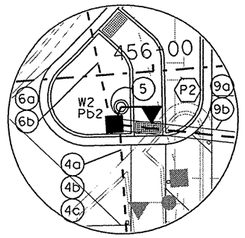

"DETAIL H"

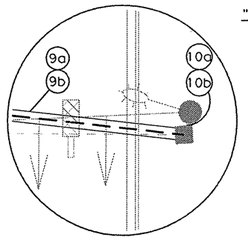

"DETAIL I"

PEDESTRIAN SIGNAL POLE ELEVATIONS

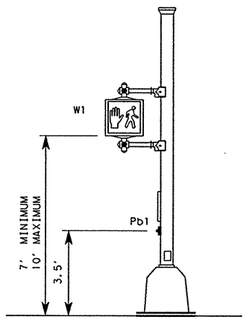

PEDESTRIAN SIGNAL POLE
NTS
POLE 1

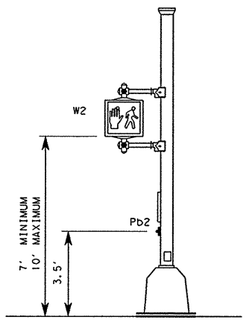

PEDESTRIAN SIGNAL POLE
NTS
POLE 2 (RELOCATED)

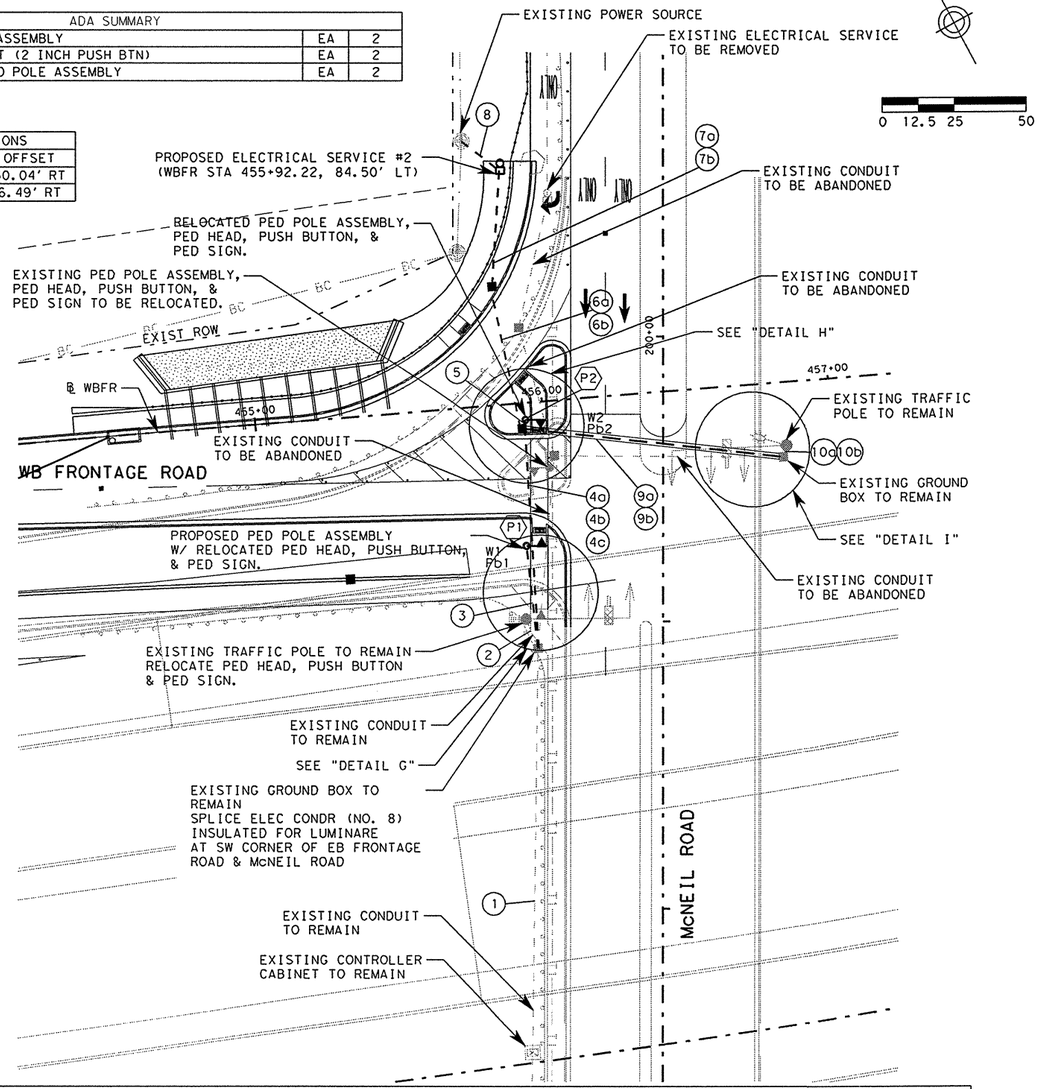

CONDUIT TABLE																		
	DESCRIPTION	RUN NO.	1	2	3	4a	4b	4c	5	6a	6b	7a	7b	8	9a	9b	10a	10b
		LENGTH (FT)	142	11	36	77	77	77	5	51	51	40	40	20	91	91	5	5
CONDUIT	CONDT (PVC) (SCHD 80) (2")				1	1			1	1		1		1				
	CONDT (PVC) (SCHD 80) (3")						1	1			1		1					
	CONDT (PVC) (SCHD 80) (3") (BORE)														1	1		
	EXISTING CONDUIT (E)		E	E													E	E
	ELEC CONDR (NO. 4) BARE					1				1		1		1				
	ELEC CONDR (NO. 4) INSULATED		2			2				2		2						
	ELEC CONDR (NO. 8) BARE				1		1	1	1		1		1		1	1		
	ELEC CONDR (NO. 8) INSULATED					2				4		4			2			2
	TRF SIG CBL (TY A) (14 AWG) (4 CONDR)		1				1									1	1	
	TRF SIG CBL (TY A) (14 AWG) (5 CONDR)		2		1		1		1									
	TRF SIG CBL (TY A) (14 AWG) (7 CONDR)		1				1									1	1	
	VIVDS COMMUNICATION CABLE (COAXIAL)		1				1									1	1	

E = EXISTING

NOTES:

1. SIGN STATIONING IS FROM ℄ SH 45 UNLESS OTHERWISE INDICATED.
2. UTILITIES SHOWN ARE PROVIDED FOR INFORMATIONAL PURPOSES ONLY AND SHOULD BE FIELD VERIFIED PRIOR TO CONSTRUCTION.

LEGEND

- P4 — POLE NUMBER
- # — CONDUIT NUMBER
- EXISTING SIGNAL HEAD
- EXISTING VIVDS CAMERA
- PROPOSED PEDESTAL POLE
- EXISTING MAST ARM AND SIGNAL POLE
- EXISTING LUMINAIRE
- W# Pb# — PROPOSED PUSH BUTTON AND PED HEAD
- EXISTING PUSH BUTTON AND PED HEAD
- PROPOSED GROUND BOX
- EXISTING GROUND BOX
- EXISTING CONTROLLER CABINET
- RELOCATED ELECTRICAL SERVICE
- EXISTING ELECTRICAL SERVICE
- EXISTING SIGNAL CONDUIT
- PROPOSED SIGNAL CONDUIT (TRENCH)
- PROPOSED SIGNAL CONDUIT (BORE)
- EXISTING WIRELESS ANTENNA

STATE OF TEXAS
RENE U. GARZA
65409
REGISTERED PROFESSIONAL ENGINEER

Rene U Garza PE
6/3/11

REV. NO.	DATE	REVISION	BY
△			
△			
△			

PBSJ
an Atkins company
TBPE REG. # F-474

Texas Department of Transportation
Austin District
©2011 by TxDOT

SH 45 / O'CONNOR DRIVE TRAFFIC SIGNAL LAYOUT McNEIL ROAD

SCALE: 1"=50'
SHEET 1 OF 1

DESIGNED: CRN	FED. RD DIV. No.	STATE	PROJECT No.			HIGHWAY No.
CHECKED: RUG	6	TEXAS				LP 1/SH 45
DRAWN: CRN	STATE DISTRICT	COUNTY	CONTROL No.	SECTION No.	JOB No.	SHEET No.
CHECKED: RUG	AUSTIN	WILLIAMSON	0683	06	027	549

PLOT DRIVER: RD*11x17*PDF.plt
PEN TABLE: plotordr*ocon.tbl
FILE: r:\trans-design\o'connor\cadd\SIG\0C45TS06.dgn

DISCLAIMER
The use of this standard is governed by the "Texas Engineering Practice Act". No warranty of any kind is made by TxDOT for any purpose whatsoever. TxDOT assumes no responsibility for the conversion of this standard to other formats or for incorrect results or damages resulting from its use.

DN:
CK:
DW:
CK:

DATE:
ACC:
FILE:

I. GENERAL REQUIREMENTS FOR ALL ELECTRICAL WORK

The location of all conductors, conduits, junction boxes, ground boxes, and electrical services is diagrammatic only and may be shifted by the Engineer to accommodate local conditions.

Materials shall be new and unused. Materials and installation shall comply with the applicable provisions of the National Electrical Code (NEC), National Electrical Manufacturers Association (NEMA) standards, and shall be Underwriters Laboratories (UL) Listed unless otherwise shown on the plans or specifications or approved by the Engineer in writing. Faulty fabrication or poor workmanship in any material, equipment, or installation shall be justification for rejection. When reference is made to UL, it can be considered to mean a Nationally Recognized Independent Testing Lab (NRTL). Comparable standards of Canadian Standard Association, Electrical Testing Laboratories or Factory Mutual can be equal to the referenced UL standard. Where reference is made to NEMA listed devices, IEC listed devices shall not be considered to be an acceptable equal to a NEMA listed device. Acceptable devices may have both a NEMA and IEC listing.

With the exception of high strength bolts, miscellaneous nuts, bolts and hardware may be stainless steel when plans specify galvanized, provided that bolts are 1/2 inch or less in diameter. The Contractor shall provide the following electrical test instruments as required by the Engineer to confirm compliance with the contract and the NEC. Those test instruments are voltmeter, amp probe, megger (1000 volt DC) and torque wrenches. All meters shall have been properly calibrated within one year. Calibration certification shall be provided to the Engineer upon request. Calibration certification tag shall also be applied to the meter. The Contractor shall operate meters during inspection as requested by the Engineer. Grounding shall be as shown on the plans and in accordance with the NEC. Metallic conduit, light poles, luminaires on bridge structures, and all metal enclosures shall be bonded to the system-grounding conductor. The ground rod in each ground box or junction box at the bridge ends, and in each ground box installed for underpass lighting will also be bonded to the system grounding conductor. The grounding conductor shall be bare or, if insulated, shall be green. Ground rods, connectors, and bonding jumpers will not be paid for separately, but will be subsidiary to the various bid items.

SUBMITTALS:

The contractor shall submit for approval six (6) copies of catalog cut sheets for each of the following three (3) categories.
Category 1. Electrical services including photocell.
Catagory 2. Breakaway disconnects, heat shrink tubing, heat shrink filler tape, GelCaps and ground boxes which will include loading capacity certification.
Category 3. Highmast assembly kits, when applicable. See Item 614 "Highmast Illumination Assemblies". Submittals shall be legible and shall be marked to indicate which product on a cut sheet is to be supplied. Where manufacturers provide warranties and guarantees as a customary trade practice, the Contractor shall furnish to the State such warranties and guarantees.
Any deviation from plans or specifications, including deviations due to plan error should be prominently displayed on the submittal.
Any changes not prominently noted in submittal and incorporated into the work without proper authorization will constitute grounds for rejection of that portion of the work.

II. CONDUIT

A. MATERIALS
1. Conduit and fittings shall be UL Listed for the intended use shown on plan sheets.
2. Conduit shall be the type shown by descriptive code or shown elsewhere on the plans. Substitution of the various types of conduits will not be permitted. All flexible conduit in rigid metallic conduit (RMC) systems shall be Liquidtight Flexible Metal (LFMC) conduit. All flexible conduit in PVC systems shall be Liquidtight Flexible Non-metallic conduit (LFNC).
3. All exposed conduits shall be RMC, unless otherwise specifically shown on the plans. All metal conduit shall be properly grounded.
4. Couplings, connectors, conduit bodies, grounding bushings, and offset nipples for RMC shall be electro-zinc plated steel or hot dipped galvanized malleable iron, threaded or threadless compression type, rain-tight and shall be UL listed for the intended use.
5. Expansion joints for metal conduit shall be provided with an internal or external bonding jumper and shall be UL listed.
6. Unless otherwise shown on the plans, junction box minimum sizes shall be in accordance with the following table which applies to the greatest number of conductors entering the box through one conduit with no more than four conduits per box. When a mixture of conductor sizes are present, the conductors shall be counted as if all are of the larger size. Situations not applicable to the table shall be sized in accordance with NEC 370-28.

AWG	3 CONDUCTORS	5 CONDUCTORS	7 CONDUCTORS
#1	10" x 10" x 4"	12" x 12" x 4"	16" x 16" x 4"
#2	8" x 8" x 4"	10" x 10" x 4"	12" x 12" x 4"
#4	8" x 8" x 4"	10" x 10" x 4"	10" x 10" x 4"
#6	8" x 8" x 4"	8" x 8" x 4"	10" x 10" x 4"
#8	8" x 8" x 4"	8" x 8" x 4"	8" x 8" x 4"

7. RMC system junction boxes equal to or smaller, in any dimension, than 12 x 12 x 6 (HxWxD), surface mounted and containing conductors #8 or larger, shall be hot dipped galvanized cast iron with minimum wall thickness of 3/16 inch, shall have external mounting lugs, and shall be UL listed Crouse-Hinds Type WAB, OZ/Gedney Type YS or approved equal. Unless otherwise shown elsewhere on the plans, RMC system junction boxes larger than the aforementioned boxes but equal to or smaller, in any dimension, than 18 x 18 x 6 (HxWxD) shall be 14-ga. stainless steel; RMC system junction boxes larger than 18 x 18 x 6 (HxWxD) shall be 12-ga. stainless steel. All metal junction boxes shall be equipped with a threaded hole or lug for grounding. Stainless steel boxes 12 x 12 x 6 and larger need not be UL Listed but shall meet the other requirements of the NEC and shall have ribs, stiffeners, or thicker metal and shall have external mounting feet. Junction boxes with an internal volume of more than 100 cu. in. may be supported by connection of two or more rigid metal conduits, where specifically shown on the plans or where approved by the Engineer.
8. Junction boxes containing only #10 or #12 AWG conductors shall be Crouse Hinds Type GRFX, Appleton Type JBOX, two-gang FD, or similar approved cast iron box. Boxes shall be sized according to NEC Table 370-16(a).
9. IMC and EMT conduit shall not be used unless specifically required by the plan layout sheets. Junction boxes in EMT conduit systems shall be made from galvanized sheeting and shall be UL listed and approved for outdoor use, unless otherwise noted on the plans. Sheet metal junction boxes shall be sized in accordance with the NEC. Junction boxes for IMC conduit systems shall meet the requirements of boxes used with RMC systems.
10. Junction boxes in PVC conduit systems shall be PVC, intended for outdoor use, unless otherwise noted on the plans.
11. Elbows in PVC conduit systems one inch and larger shall be rigid metal, with the exception of traffic signal systems which may have PVC elbows instead of rigid. If any part of the rigid metal elbow is buried less than 18 inches underground the elbow and rigid metal extension shall be grounded. Grounding shall be accomplished by means of a grounding bushing installed on the extension. Unless specifically shown on the plans, rigid metal elbows containing, or entering ground boxes containing only communications conductors, loop detectors, or other low voltage power limited circuits need not be grounded unless a ground wire is present in the conduit or ground box. The rigid metal elbows located in concrete foundations may be extended with PVC conduit and need not be grounded provided that the end of the elbow nearest the end of the conduit run exiting the foundation is at least 2 inches below the concrete. RMC elbows will not be eliminated. RMC elbows will not be paid for directly, but will be subsidiary to various bid items.
12. High-Density Polyethylene (HDPE) conduit shall meet the requirements of Item 622, Duct Cable, except that the HDPE conduit, when bid under Item 618, Conduit, shall not contain factory installed conductors. Fittings for HDPE conduit shall be UL listed as an electrical conduit connector or shall be thermally fused using an electrically heated wound wire resistance welding method. HDPE conduit may be substituted for bored schedule 40 or schedule 80 PVC conduit. When such substitution is made, bored HDPE shall be schedule 40 of the size PVC being replaced. The HDPE conduit shall transition to PVC (or RMC elbow when required) at the bore pit. Size and schedule shall be as shown on the plans. Substituted conduit may not be extended to ground boxes or foundations; RMC elbows shall be installed at ground boxes and foundations. RMC elbows will not be eliminated.
13. All conduit support hardware including straps, nuts, bolts, screws, retaining anchors and washers shall be hot dipped galvanized or stainless steel. Strut type conduit straps shall be stainless steel or hot dipped galvanized. Strut type straps need not be made of malleable type material. Stamped-cadmium plated straps will not be allowed. Straps having only one mounting hole shall not be allowed for use on conduits 2 inches and larger with the exception of electrical service poles where stainless steel standoff straps will be allowed. Two piece conduit straps designed to be used with a mounting shoe shall be installed only with the correctly sized shoe.

B. CONSTRUCTION METHODS

1. Conduit in structures shall have expansion fittings at structure expansion joints. All straight runs of RMC conduit exposed on structures such as bridges shall have expansion joints installed at maximum intervals of 150 feet. Expansion joints shall be installed so they allow for movement of the conduit. Installation of the joint in such a manner that will not allow for movement shall be repaired at no expense to the state. The method of determining the final setting length of the expansion joint shall be provided to the Engineer upon request.
2. Conduit supports shall be spaced at maximum intervals of 5 feet. Conduit spacers shall be used with metal conduit placed on surfaces of concrete structures (See conduit mounting options).
3. Conduit supports shall not be attached directly to prestressed concrete beams except as shown specifically in the plans and approved by the Engineer.
4. Unless otherwise shown on the plans, conduit placed beneath existing roadways, driveways, or sidewalks, or after the base or surfacing operation has begun, shall be accomplished by jacking or boring. The Contractor shall back fill and compact the bore pits to the bottom of the conduit prior to installing connecting conduit or duct cable to prevent bending of the connection.
5. Conduit trenched in the subgrade of new roadways shall be backfilled with excavated material, unless otherwise noted on the plans. Conduit trenched in the sub-base of new roadways shall be backfilled with cement-stabilized base.
6. Open ends of all conduit and raceways shall be fitted with temporary caps or plugs to prevent entry of dirt, debris and rodents during construction. The temporary cap may be constructed of duct tape, but in all cases shall be tightly fixed to the conduit and shall be durable. The contractor shall clean out the conduit and prove it clear in accordance with Standard Specifications Item 618.3 prior to installing any conductors.
7. Conduit entry into the top of enclosures such as safety switches, meter cans, service enclosures, auxiliary enclosures and junction boxes shall be made weatherproof using conduit sealing hubs, or threaded bosses.
8. A bonding jumper shall be installed from each grounding bushing to the nearest grounding rod, grounding lug, and/or equipment grounding conductor. All jumpers shall be the same size as equipment grounding conductor. Conduit used as casing under roadways for duct cable need not be grounded if duct extends full length through the casing. At electrical services, grounding electrode conductor shall be a solid Copper #6 AWG.
9. Metal junction boxes shall be bonded to the grounding conductor in accordance with the NEC.
10. Conduits entering ground boxes shall be placed so that the conduit ends shall be not less than 3 inches nor more than 6 inches from bottom of box (See ground box detail on sheet ED(3).
11. Conduit ends shall be sealed with heat shrink boots with waterproof sealant, urethane foam, or by other methods approved by the Engineer. Sealing shall be done after completion of any required pull tests. Duct tape shall not be used as a permanent conduit sealant. Silicone caulking shall not be used as a sealant.
12. All strut mounting material and hardware shall be hot-dip galvanized or shall be stainless steel. The cut ends of strut and non-galvanized rigid metal conduit threads shall be coated with a zinc rich paint (90% or more zinc content). Zinc rich paint may only be used to touch up galvanized material as allowed under item 445.6 galvanizing. The painting of non-galvanized material with a zinc rich paint shall not be considered as an approved alternative for galvanized materials.
13. All PVC conduit terminations shall be fitted with bushings or bell ends. All metal conduit terminations shall be fitted with a grounding type bushing.

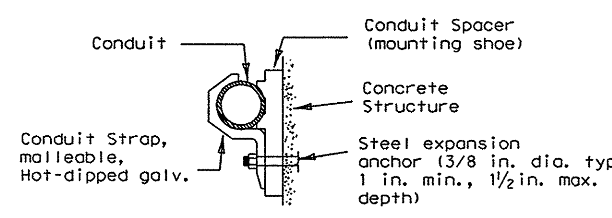

CONDUIT MOUNTING OPTIONS

(Attachment to concrete surfaces)
(See para. II.B.2)

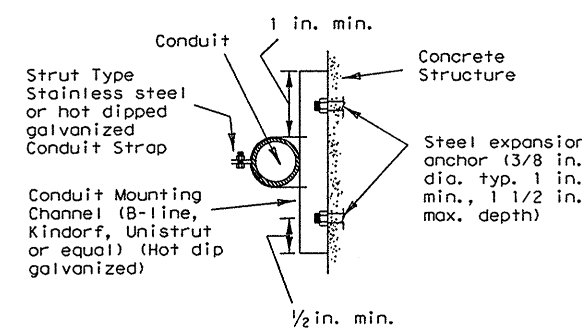

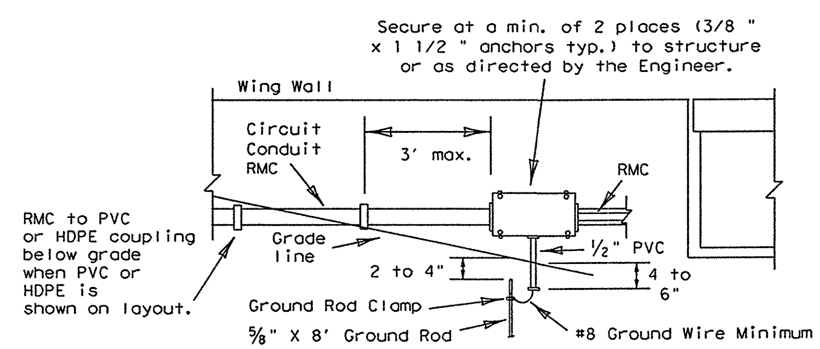

TYPICAL CONDUIT ENTRY TO BRIDGE STRUCTURE DETAIL

NOTES

1.) Ground rod clamp to be UL listed for direct burial.
2.) For conduit placed in structure, use flush-mounted box.
3.) Bond junction box and metal conduits to equipment grounding conductor and grounding electrode conductor using listed connector.
4.) Seal all conduits entering the junction box from underground.
5.) Install bell end or bushing on 1/2 " PVC conduit both ends.
6.) Ground rod to be driven within 8 inches of 1/2 inch PVC conduit end.

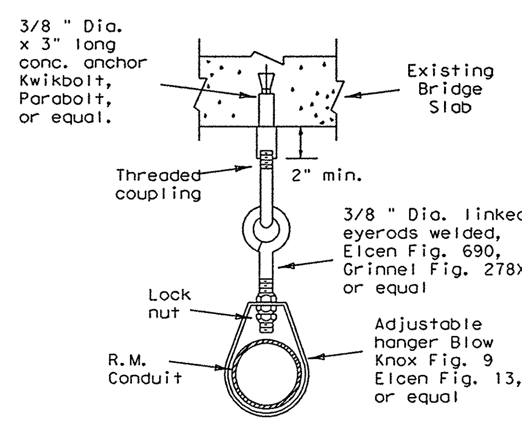

CONDUIT HANGER DETAIL

(Attachment to horizontal surfaces)
Hangers need not be UL listed for electrical use
ie: plumber pipe hangers are acceptable

5/03 Revision
Revised notes.

STANDARD PLANS
TEXAS DEPARTMENT OF TRANSPORTATION
Traffic Operations Division

ELECTRICAL DETAILS-CONDUIT

ED(1)-03

©TxDOT January 1992	DN: KB	CK: JW	DW: DN	CK: GC	NEG NO.:
REVISIONS	STATE DISTRICT	FEDERAL REGION	FEDERAL AID PROJECT		SHEET
4-98 12-00	AUSTIN	6			550
3-03	COUNTY		CONTROL-SECT-JOB		HIGHWAY
5-03	WILLIAMSON		0683-06-027		SH 45 LOOP 1

71A

DISCLAIMER
The use of this standard is governed by the "Texas Engineering Practice Act". No warranty of any kind is made by TxDOT for any purpose whatsoever. TxDOT assumes no responsibility for the conversion of this standard to other formats or for incorrect results or damages resulting from its use.

I. ELECTRICAL CONDUCTORS

A. MATERIALS

1. Insulated conductors shall be NEC Type XHHW. Insulated conductors shall be color coded in accordance with the NEC, articles 200, 250, and 310; i.e. Insulation of grounded conductors (neutrals) shall be white. Grounding conductors (ground wires) shall be bare or insulation shall be green. Insulation of ungrounded conductors (hots) shall be any color except green, white, or gray. Identification of conductors #6 American Wire Guage (AWG) and smaller shall be by continuous jacket color. Color coding of electrical conductors #4 AWG and larger shall be either by continuous color jacket or by colored tape. Colored tape marker shall consist of a half-lap of tape covering a 6-inch length of conductor.
2. Where two or more circuits are present in one conduit or enclosure, the conductors of each circuit shall be identified by a permanent non-metallic tag at each accessible location. The tag shall be fastened to the conductors by two plastic straps. Each tag shall indicate circuit number, letter, or other identification shown in the plans.
3. Grounding electrode conductor #6 AWG for bonding to ground rod at electrical service, shall be solid. Connection of conductor to ground rod shall be made using UL Listed connectors designed for such purposes.
4. Heat Shrink Tape filler shall be used to seal the ends of heat shrink tubing around two or more conductors that are insulated with heat shrink tubing. Tape material shall have a minimum dielectric strength of 225 volts per mil and shall be cross-linked butyl rubber. Tape shall be supplied in rolls and shall have a backing (release paper) to prevent the tape from sticking to itself.
5. Heat shrink tubing shall be heavy wall, UL listed for 600 volts or greater and shall have factory applied internal sealant.
6. GelCaps shall be UL listed for 600-volt applications. GelCap shall have see-through elastomer molded cover. Cover shall be filled with high dielectric insulating gel silicone sealant to provide waterseal. Cover shall be held in place by snap-lock, molded clamp made of UV stable polypropylene.
7. Splicing materials, insulating materials, breakaway disconnects, GelCaps and fuse holders will not be paid for directly but shall be subsidiary to various bid items.

B. CONSTRUCTION METHODS

1. After conductors have been installed in conduit, a pull test shall be made on conductors. When any length of conductor cannot be freely pulled, the Contractor shall make any needed alterations or repairs at no expense to the State.
2. The Contractor shall perform insulation resistance tests in accordance with Item 620, "Electrical Conductors." The Contractor shall coordinate with the Engineer to witness the tests.
3. A sufficient length of conductor for making up connections shall be left in ground boxes (2 feet minimum, 3 feet maximum, to point of splice, 3 feet minimum, 4 feet maximum, when conductor is pulled through with no splice), enclosures, weatherheads and pole bases (1 foot minimum, 1.5 feet maximum).
4. Splices shall be made only in junction boxes, ground boxes, pole bases, or electrical enclosures and shall be made with listed compression or screw type pressure connectors, terminal blocks, bolted lugs, or split bolt connectors. Splices shall be insulated with heavy wall heat shrink tubing or GelCaps and shall be made so as to provide a watertight splice. Heat shrink sleeve shall overlap conductor insulation a minimum of 2 inches on both sides of the splice. Where heat shrink tubing may not shrink sufficiently to provide a watertight seal around the individual conductors, prior to heating the tubing, the Contractor shall increase the diameter of the conductors insulation using heat shrink filler tape to provide a watertight seal between the individual conductors and the heat shrink tubing. Tape shall be visible after completion of all splices. Where filler tape is used but not visible, the Engineer shall approve each individual splice by conducting a physical inspection of each splice. When it appears the tubing has been burned, or overheated the tubing shall be considered to be defective and shall be replaced.
5. GelCaps when used in place of heat shrink method of splicing, shall be sized and installed according to manufacturer's specifications. (Raychem GelCap and GelCap SL or equal.)
6. Wire nuts may be used for #8 AWG or smaller conductors in above-ground junction boxes, but not in pole bases or ground boxes. Wire nuts shall be positioned upright to prevent the accumulation of water. Wire nuts used at these locations shall have factory applied waterproof sealant.
7. Conductors in illumination poles shall be supported by a J-hook in the top of the pole.
8. All conductors bid under Item 620 "Electrical Conductors" shall have breakaway electrical disconnects installed anytime conductors pass through a break-away support device.
9. For terminating the conductors, insulation-jacketing material shall be removed in such a manner as to not nick any of the individual strands of the conductor. When individual conductor strands are removed, the conductor shall be considered to be damaged.
10. When a conductor or cable has been damaged, or fails to pass an insulation resistance test, the conductor shall be replaced.
11. Duct tape, black electrical tape, or wire nuts shall not be used in the repair of a damaged conductor.
12. For terminations, no more than one wire may be installed under a single pressure connector, unless the device is listed for more than one wire.
13. Conductors connected to break-away in line fuse holders must be installed in accordance with the specific manufacturer's installation instructions. Where threaded connections are made, they shall be properly torqued. Where crimp type connections are made, crimps shall be made using properly sized crimping pliers. Proper conductor terminations are critical to the safe operation of break-away devices.
14. Waterproofing boots shall be properly trimmed to fit snugly around the conductor so as to provide a water proof connection. No more than one wire may enter a single opening in any one boot. Water proofing boots must provide the correct number of openings. Where only one wire is to be connected to a boot, the boot may not be a two wire type.

SPLICE OPTION 3

SPLIT BOLT

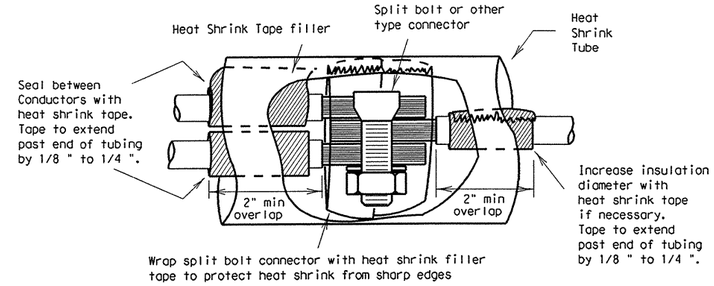

SPLICE OPTION 4

GELCAP

GelCap shall be sized and installed according to manufacturers specifications

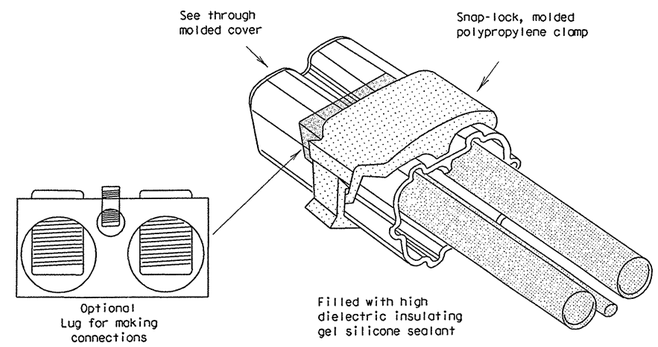

15. All conduits that contain circuit wiring of 50 volts or more shall contain an equipment grounding conductor (EGC). Conduit for traffic signals shall have an EGC, with a minimum size of #8 AWG stranded. Unless otherwise shown on the plans, the EGC for all other conduits shall be the same AWG size as the largest current carrying conductor contained in that conduit. The EGC shall be paid for item 620-Electrical Conductors.

C. TEMPORARY WIRING

1. Temporary conductors and electrical equipment to provide power for utilization equipment, shall be installed in accordance with the NEC article 305. All temporary wiring materials and methods shall comply with the standard sheets. All power outlets for portable electrical equipment, power tools, ice machines, ice storage bins and refrigerators located outdoors at grade, supplied from a utility power source, shall be provided with a ground fault circuit interrupter.
2. Residual current protective devices (GFCI) may be any one of the following: molded cord and plug set, receptacle, or circuit breaker type.
3. Where wire nuts are approved for temporary wiring, they shall be of the self-sealing type.
4. All conductor splices must be contained within a listed enclosure, ground box or the splices will be more than ten feet above grade vertically and more than five feet horizontally from any metal structure. Where temporary conductors are installed in any area that is likely to be subjected to vehicle traffic, or mobile construction equipment, the vertical clearance to ground shall be at least 18 feet when measured at the lowest point. Where power conductors are to be supported by a span wire, the span wire shall be properly grounded.
5. Existing conduit containing service conductors uncovered during the construction process shall be repaired in a timely manner in accordance with the NEC. Existing non-metallic conduit exposed during construction shall not be left exposed above grade, or with less than eighteen inches of cover, without protective methods approved by the Engineer.

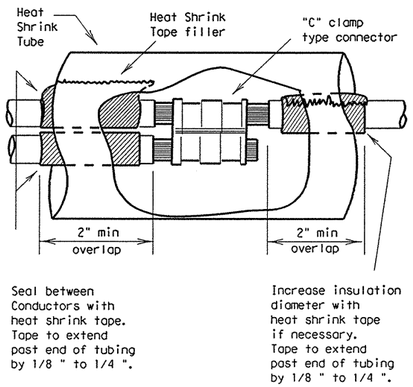

SPLICE OPTION 1

C-CLAMP

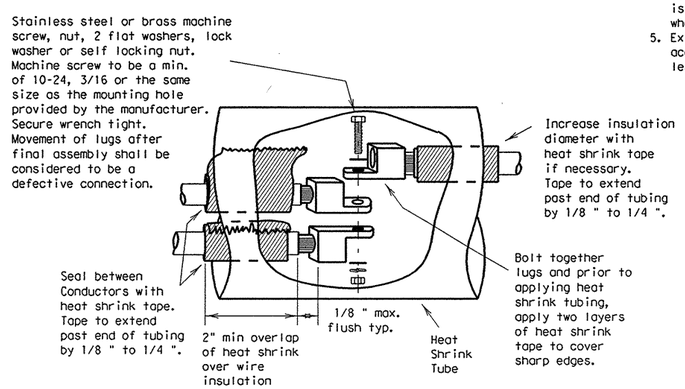

SPLICE OPTION 2

BOLTED WIRE LUGS

STANDARD PLANS
TEXAS DEPARTMENT OF TRANSPORTATION
Traffic Operations Division

ELECTRICAL DETAILS-CONDUCTORS

ED(2)-03

©TxDOT January 1992	DN: KB	CK: JW	DW: DN	CK: GC	NEG NO. 1
REVISIONS 10-93 4-98 12-00 3-03	STATE DISTRICT: AUSTIN	FEDERAL REGION: 6	FEDERAL AID PROJECT		SHEET 551
	COUNTY: WILLIAMSON		CONTROL-SECT-JOB: 0683-06-027		HIGHWAY FM 45 LOOP 1

DN: CK: DW: CK:
DATE: ACC: FILE:
LEVELS 0
71B

DISCLAIMER
The use of this standard is governed by the "Texas Engineering Practice Act". No warranty of any kind is made by TxDOT for any purpose whatsoever. TxDOT assumes no responsibility for the conversion of this standard to other formats or for incorrect results or damages resulting from its use.

II. GROUND RODS

A. MATERIALS

1. All ground rods installed at electrical services, including supplemental lightning protection ground rods specified by the plans in other locations such as pole bases, shall be copper clad and UL listed. Rods shall be a minimum diameter of 5/8 inch. The length shall be a minimum of 8 feet. Larger diameter or longer length rods may be called for in some specific locations, see the individual plans sheets.
2. Ground rod clamps shall be listed to be in direct contact with the soil. Where concrete encasement is required, the clamp shall be listed for concrete encasement.

B. CONSTRUCTION METHODS

1. Ground rods installed in locations such as pole bases, to provide supplemental lightning protection need not be totally in contact with the soil. Where called for in the plans, rods may be encased in soil or concrete or any combination of soil and concrete. When concrete encased, the connection of the conductor to the rod shall be readily accessible for inspection or repairs. When driven into the soil the upper end shall be between 2 to 4 inches below finished grade. Ground rods shall not be placed in the same drilled hole as a timber pole.
2. Ground rods shall be installed such that the end imprinted with the rod's part number is installed as being the upper end.
3. Non-conductive coatings such as concrete splatter shall be removed from the rod at the clamp location.
4. Routing of lightning protection ground rod wires shall be run as short and straight as possible. Where bends are required they shall have a minimum radius of four inches.
5. Unless specifically called for by the plans, conduits used for ground rod wires shall be non-metallic. Where metal conduits are specified, a grounding bushing and properly sized bonding jumper shall be provided and properly installed on each end.
6. Where rocky soil or a solid rock bottom is encountered when driving a ground rod and the horizontal trench placement method is the only viable solution, written authorization from the Engineer must be obtained.

III. GROUND BOX

A. MATERIALS

1. Ground boxes 16x30x24 inches (WxLxD) or smaller shall be polymer concrete of the type required by the descriptive code shown elsewhere. Larger ground boxes shall be as shown elsewhere in the plans.
2. All ground boxes and covers shall be permanently marked either by impress or by permanent ink, with manufacturer's model number and manufacturer's name or logo.
3. Covers shall be bolted down, and bolt holes in the box shall be arranged to drain dirt.
4. Ground box Types A, B, C, D & E shall meet the following requirements:
   a. Ground boxes and covers be manufactured from polymer concrete reinforced with continuous strands of woven or stitched borosilicate fiberglass cloth. The polymer concrete shall be made from catalyzed polyester resin, sand and aggregate, and shall have a minimum compressive strength of 11,000 psi. Polymer concrete containing chopped fiberglass or fiberglass reinforced plastic is not acceptable.
   b. Minimum inside dimensions shall be as follows (width x length x depth):
      Type A shall be 11.5 inches x 21 inches x 10 inches, (122311)
      Type B shall be 11.5 inches x 21 inches x 20 inches, (122322)
      Type C shall be 15.25 inches x 28.25 inches x 10 inches, (162911)
      Type D shall be 15.25 inches x 28.25 inches x 20 inches, (162922)
      Type E shall be 11.5 inches x 21 inches x 16 inches, (122317)
   c. Bottom edge of box or extension shall be footed with a minimum 1 1/4 inch flange.
   d. Ground boxes shall withstand 600 lbs. per sq. ft. applied over the entire sidewall with less than 1/4 inch deflection per foot length of box. Ground boxes and covers shall withstand a test loading of 20,000 lbs. over a 10 inch by 10 inch area centered on the cover with less than 1/2 inch deflection. Ground boxes and covers shall meet Western Underground Standards 3.6. Manufacturer shall supply certification by an independent laboratory or sealed by a Texas-Licensed Professional Engineer.
   e. Covers shall be 2 inch (nominal) thick polymer concrete. All hardware shall be stainless steel. Cover shall be secured with two 1/2 inch stainless steel bolts. Bolts shall be self-retaining and shall withstand a minimum of 70 ft-lbs. torque and shall have a minimum 750 lbs. straight pull out strength. Nuts shall be floating and shall provide a minimum of 1/2 inch movement from the center of the nut. Covers shall be skid resistant, minimum 0.5 coefficient of friction. Covers shall be interchangeable between manufacturers and shall conform to the dimensions shown herein. Unless otherwise approved by the Engineer, cover shall be legibly imprinted with the following words in minimum 1 inch letters:
      Ground Boxes containing wiring for traffic signals shall be labeled, Danger High Voltage Traffic Signal.
      Ground boxes containing wiring for illumination systems shall be labeled, Danger High Voltage Illumination.
      Ground boxes containing wiring for traffic management systems shall be labeled, Danger High Voltage Traffic Management.
      Ground boxes containing wiring for sign illumination systems shall be labeled, Danger High Voltage Sign Illumination.
      Ground boxes containing wiring for traffic signals that also contain illumination, powered by the signal electrical service, shall be labeled, Danger High Voltage Traffic Signal.

B. CONSTRUCTION METHODS

1. Ground boxes shall be set on a 9 inch (minimum) bed of aggregate from 3/4 " up to 2" in size. Aggregate shall be in place prior to setting box and conduits shall be capped. Any gravel or dirt in conduit shall be removed.
2. When required by item descriptive code, construction of an apron encasing a ground box including concrete and reinforcing steel shall not be paid for directly but shall be subsidiary to the ground box. Reinforcing steel may be field bent. Concrete for aprons shall be considered miscellaneous concrete for testing purposes. Aprons shall be cast in place.
3. Conduit holes may be cut in the walls of type B & D boxes at least 18 inches beneath the cover.
4. If, within the limits of this project, the Contractor must utilize an existing ground box equipped with a metal cover, the Contractor shall bond the cover to the grounding conductor with a 3 foot long flexible stranded jumper the same size as the grounding conductor. Connection of bonding jumper to metal ground cover shall not be paid for directly but shall be subsidiary to various bid items. The box(es) must be clearly shown on the plans with plan notes fully describing the work required.
5. If there are other ground boxes with metal Covers within the project limits but not involved in the contract, the Engineer may direct the Contractor to ground the covers, designating and identifying the specific boxes in writing. This work will be paid for separately.
6. Termination to metal ground box covers shall be made using a tank ground type lug.

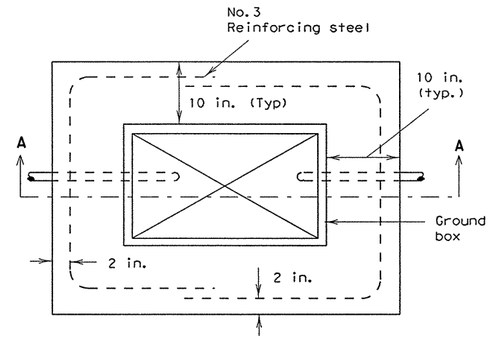

PLAN VIEW

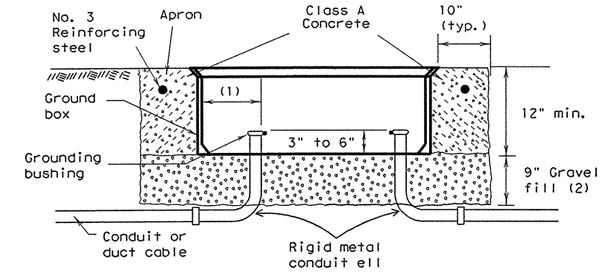

SECTION A - A

APRON FOR GROUND BOXES

(Where required)

(1) Final position of end of conduit shall not exceed one-half the distance to the side of box opposite the conduit entry.
(2) Place gravel "under" the box. not "in" the box. Gravel should not encroach on the interior volume of the box.
(3) Install bushing on the upper end of all ells.
(4) Where a ground rod is present in the ground box, connect it to any and all equipment grounding conductors using a listed connector.
(5) Maintain sufficient space between all conduits so as to allow for proper installation of bushings.
(6) All conduits shall be installed in a neat and workmanlike manner.
(7) All conduits installed in the ground box shall be sealed after completion of conductor installation and any required pull tests. Silicone shall not be used as sealant.

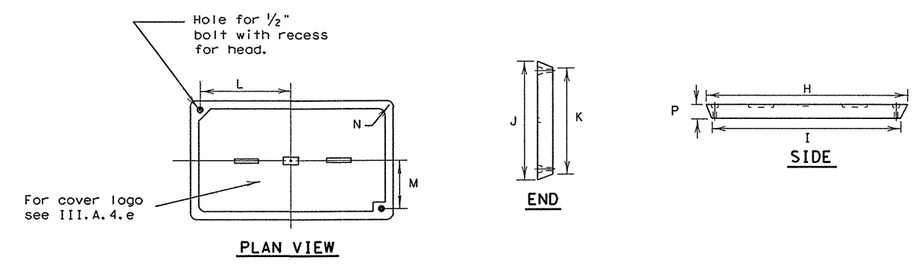

PLAN VIEW

END

SIDE

GROUND BOX COVER

GROUND BOX COVER DIMENSIONS								
BOX	DIMENSIONS (INCHES)							
SIZE	H	I	J	K	L	M	N	P
A, B & E	23 1/4	23	13 3/4	13 1/2	9 7/8	5 1/8	1 3/8	2
C & D	30 1/2	30 1/4	17 1/2	17 1/4	13 1/4	6 3/4	1 3/8	2

5/03 Revision

1 Revised notes.

STANDARD PLANS
TEXAS DEPARTMENT OF TRANSPORTATION
Traffic Operations Division

ELECTRICAL DETAILS- GROUND BOXES

ED(3)-03

©TxDOT January 1992		DN: KB	CK: JW	DW: DN	CK: GC		MSG NO.:
REVISIONS 4-98 12-00 3-03 5-03	STATE DISTRICT	FEDERAL REGION	FEDERAL AID PROJECT				SHEET
	AUSTIN	6					552
	COUNTY			CONTROL-SECT-JOB			HIGHWAY
	WILLIAMSON			0683-06-027			SH 45 LOOP 1

DN: CK: DW: CK:
DATE: ACC: FILE:
LEVELS

DISCLAIMER
The use of this standard is governed by the "Texas Engineering Practice Act". No warranty of any kind is made by TxDOT for any purpose whatsoever. TxDOT assumes no responsibility for the conversion of this standard to other formats or for incorrect results or damages resulting from its use.

ELECTRICAL SERVICES NOTES

All work, materials, services, and incidentals, whether or not specifically shown on the plans, which may be necessary for a complete and proper electrical service installation as specified in the plans to obtain electrical power shall be paid for, performed, furnished and installed by the Contractor. The Contractor shall contact the Utility for metering and shall comply with all Utility requirements.

Primary line extensions, connection charges, meter charges, and other charges by the Utility company to provide power to the location shown, when required, shall be paid for under force account work. The costs associated with these charges shall be approved by the Engineer prior to engaging the Utility company to do the work. The Contractor shall consult with the appropriate Utility to determine costs and requirements, and shall coordinate the Utility's work as approved by the Engineer. The Contractor shall be reimbursed only the amount billed by the Utility. No additional amount for supervision of the Utility's work will be paid.

Materials shall be new and unused, materials and installation shall comply with the applicable provisions of the National Electrical Code (NEC) and National Electrical Manufacturers Association (NEMA) standards and shall be Underwriters Laboratories (UL) Listed. Electrical Service conduits, conductors, disconnects, contactors, circuit breaker panel sizes, and branch circuit breakers, shall be as shown in the Electrical Service Data elsewhere in the plans. Faulty fabrication or poor workmanship in any material, equipment, or installation shall be justification for rejection.

The Contractor shall submit for approval no less than six (6) copies of catalog cut sheets on electrical service materials. Submittals shall be legible and shall be marked to indicate which product on a cut-sheet is to be supplied. Where manufacturers provide warranties and guarantees as a customary trade practice, Contractor shall furnish to the State such warranties or guarantees.

The Contractor shall provide locks keyed with Master #2195 for all lockable electrical enclosures. Keys and locks become property of the State. Unless otherwise approved by the Engineer, enclosures shall not be energized until locks are provided and all bolts are installed.

Circuit directories, where provided, shall be filled out. All breakers and components in shop built panels and enclosures shall be labeled with duo-colored plastic labels. Letters shall be a minimum 3/8 " in height.

Enclosures with external disconnects that de-energize all equipment inside the enclosure, need not have dead front trim, except that incoming line terminations shall be protected from incidental contact.

When galvanized is specified for nuts, screws, bolts or miscellaneous hardware, stainless steel may be used. All wiring and components shall be rated for 75 degrees C. Minimum size for service entrance conductors shall be #6 XHHW.

I. Safety Switch. A safety switch, placed ahead of the meter, shall only be used when specified by the Utility and when shown on the Electrical Service Data. The switch shall be UL Listed, heavy duty type, 600 volt, unfused, with a UL type 3R enclosure and equipped with a solid neutral (s/n) assembly. The switch shall be padlockable in the "on" position.

II. Service Type. Electrical service types A, C, D, and T shall be as schematically detailed on ED(4) or ED(5). Other service types shall be as detailed elsewhere on the plans.

III. Branch Circuit Breakers. Circuit breakers shall be thermal magnetic and have a minimum interrupting capacity of 10,000 amps and a voltage rating compatible with their use. Circuit breakers shall be sized as shown in the electrical service data. Circuit breakers in panelboards and load centers shall be full size and designed exclusively for the panelboard or load center in use. Tandem and half-width breakers shall not be used. All circuit breakers shall be permanently and clearly marked identifying the circuit or device supplied. Circuit breakers shall be UL Listed to UL489.

IV. Circuit Breaker Panelboard. Panelboards shall be UL Listed. Panelboards shall have copper busses, a minimum of 6 one-pole spaces or as required in the electrical service data, and when required will be rated for service equipment. Enclosure shall meet or exceed UL type 3R classification. Panelboards shall have a threaded hub conduit entry for conduit entering the top of the enclosure. Circuit breakers shall be bolt-in type only.

V. Circuit Breaker Load Center. Load centers shall be UL Listed. Load centers for type T services may have copper or aluminum busses, all other load centers will be copper bus only. Load center will have a minimum of 4 one-pole spaces, and shall be rated for service equipment. Enclosure shall meet UL type 3R classification. Load centers shall have a threaded hub conduit entry for conduit entering the top of the enclosure. Circuit breakers shall be plug-in type only. Load centers for type T services shall accomodate a maximum of 6 one-pole breakers.

VI. Separate or Auxiliary Enclosure. Separate enclosures for HOA, photocell and lighting contactors for types D & T Services shall be a UL Listed assembly with outer door. Interior shall have dead front trim. HOA switch operator shall extend through the dead front trim. Photocell shall be mounted inside the enclosure as described in paragraph XIII when required by descriptive code. Separate enclosures shall meet the construction requirements of paragraph VIII. E, except that separate enclosure shall not have external operating handle, need not have a data pocket and door may latch at only one point. All equipment may be located in one enclosure instead of two, when approved by the Engineer.

VII. Where a Type D or T service is provided, laminated "as built" drawings are required as shown on ED(5) VIII E; shall be delivered before completion of the work, to the Engineer in lieu of placement within these smaller enclosures. Conduit may not enter the back wall of a service enclosure penetrating the equipment mounting panel. Provide grounding bushings on all metal conduits, terminate bonding jumper to grounding bus. Grounding bushing is not required when the end of the metal conduit is fitted with a conduit sealing hub or threaded boss such as a meter base.

EXPLANATION OF ELECTRICAL SERVICE DESCRIPTIVE CODE

ELEC SERV TY X (XXX/XXX) XXX (XX) XX (X) XX (X)

Example: ELEC SERV TY A(240/480)100(NS)SS(E)GC(O)

Schematic Type

Service Voltage (V / V)

Disconnect Amp Rating
(000 indicates main lug only)

SS= Safety switch ahead of meter
NS= No switch ahead of meter and/or no meter required

Enclosure Type
GS= Galvanized steel (see ED(5)VIII,D)
SS= Stainless steel
AL= Aluminum

Photocell Mounting Location
T= Top of pole
E= Inside service/separate enclosure
L= Luminaire mounted
N= None

Service Support Type
GC= Granite concrete
OC= Other concrete
TP= Timber pole
SP= Steel pole
SF= Steel frame
OT= Pole by others or paid for separately
EX= Existing pole
TS= Switch gear to be placed on traffic signal pole
RT= Rectangular structural tubing
PS= Pedestal Service (see ED(5)VIII,G)

O= Overhead service
U= Underground service

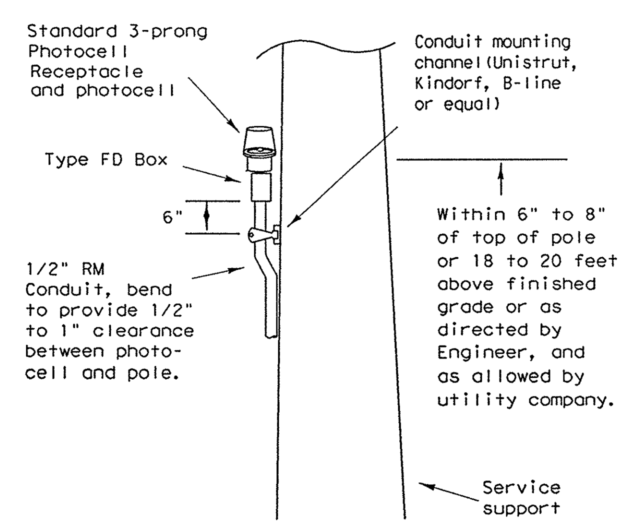

TOP MOUNTED PHOTOCELL

Conduit support spacing 3 feet from enclosure; 5 feet max.

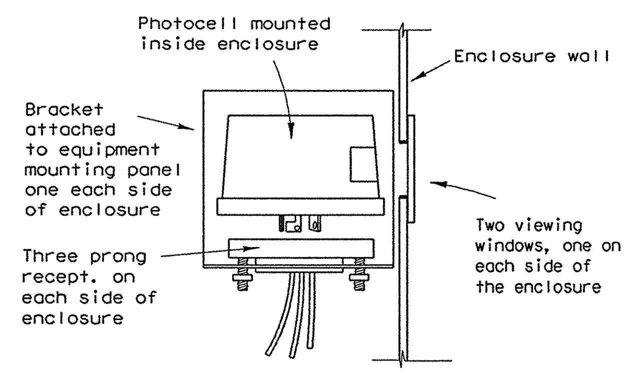

ENCLOSURE MOUNTED PHOTOCELL

For photocell specifications see ED(5),XIII.

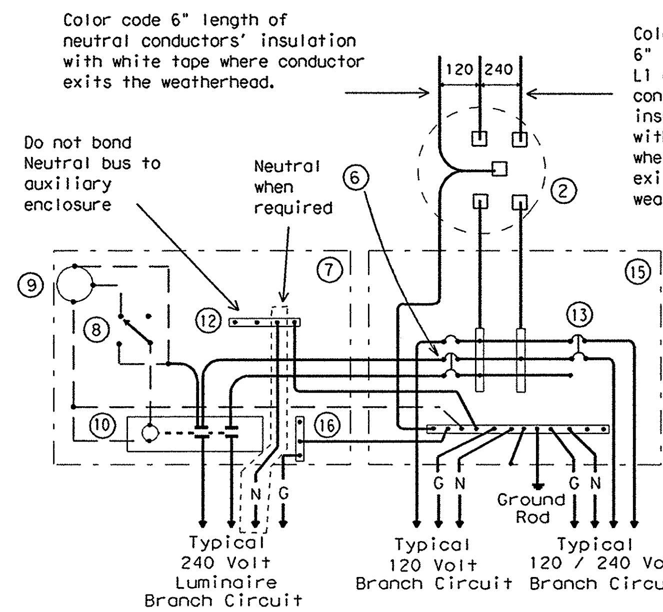

SCHEMATIC TYPE T

120/240 VOLTS - THREE WIRE

Install photocell and lighting contactor when shown on Electrical Service Data.

SCHEMATIC LEGEND

1 - omitted
2 - Meter (when required)
3 - Service Assembly Enclosure
4 - Main Disconnect Breaker (Not Used)
5 - Omit
6 - Circuit Breaker, 15 Amp typical for control circuit wiring
7 - Auxiliary Enclosure
8 - Control Station ("H-O-A" Switch)
9 - Photo Electric Control (enclosure-mounted shown)
10 - Lighting Contactor
11 - Power Distribution Terminal Blocks (Not Used)
12 - Neutral Bus required when 120 v. lights are controlled by lighting contactor
13 - Branch Circuit Breaker (See Electrical Service Data)
14 - Circuit Breaker Panelboard (Not Used)
15 - Load Center
16 - Ground Bus

————	Power Wiring
— — — —	Control Wiring
—N—	Neutral Conductor (when required-to serve 120 v. loads only)
—G—	Equipment grounding conductor-always required

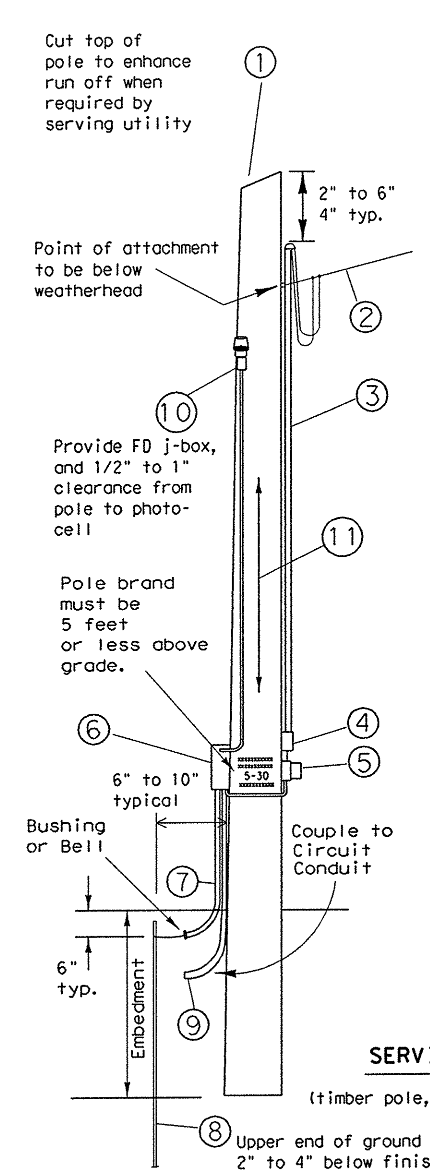

1 - Class 5 pole, height as required
2 - Service drop from utility company (attached below weatherhead)
3 - Service conduit and service entrance conductors(RMC) (See Electrical Service Data)
4 - Safety switch (when required)
5 - Meter (when required)
6 - Service enclosure
7 - No. 6 bare grounding electrode conductor in 1/2 " PVC to ground rod - extend 1/2 " PVC 6" underground.
8 - 5/8 " x 8' Copper clad ground rod - drive ground rod completely underground unless otherwise approved by the Engineer.
9 - RM conduit - same size as branch circuit conduit.
10 - Photocell and conduit - if top mounted. (See Electrical Service Data)
11 - When required by the serving utility provide bare #6 awg copper conductor. Run wire from pole top to butt wrap or copper butt plate. Protect conductor to a height of 8 ft above finish grade.

LIQUIDTIGHT FLEXIBLE METAL CONDUIT (LFMC)

(If applicable)

- Liquidtight flexible metal conduit, may be used when meter and service enclosure are mounted 90 to 180 degrees to each other. Size shall be same as service entrance conduit.
- LFMC shall not exceed 3 ft. and shall be securely supported within one ft. of each end. No strap required for LFMC shorter then 12"
- Each end of LFMC must have a grounding bushing or be terminated with a grounding fitting.
- A neutral conductor must be installed within the LFMC.
- Bend in liquidtight flexible metal conduit shall not exceed 180 degrees.
- A pull test is required on all installed conductors, at least six inches of free conductor movement shall be demonstrated to the satisfaction of the Engineer.

SERVICE SUPPORT TYPE TP (O)

(timber pole, overhead service, typical arrangement)

TIMBER POLE NOTES

1. Conduit and electrical conductors attached to the electrical service pole and underground within 12 inches of service pole shall not be paid for directly but shall be subsidiary to the service pole.
2. Pole top mounted photocell, install on north side of pole or in service enclosure as required. See Electrical Service Data.
3. Attach meter and service equipment with stainless steel or galvanized channel (Unistrut, Kindorf, or equal). Gain pole as required to provide flat surfaces for each strut. Paint ends of galvanized channel with zinc rich paint. Gain depth 5/8" max. Gain height 1 7/8" max. Strut to be 1" max. deep, and 1 5/8" wide max. Secure each strut section to timber pole with two galvanized or SS lag bolts, 1/4" diameter min. by 1 1/2" length min. Place flat cut galvanized or SS washer on each lag bolt. Gain pole in a neat and workmanlike manner.
4. Embedment depth shall be as required in Item 627 Treated Timber Poles.
5. Poles trimmed for excess length shall be trimmed from the top end only.

STANDARD PLANS
TEXAS DEPARTMENT OF TRANSPORTATION
Traffic Operations Division

ELECTRICAL DETAILS-SERVICE SCHEMATICS AND SUPPORT-TYPE TP (OVERHEAD)

ED(4)-03

©TxDOT April 1998

DN: KB	CK: JW	DW: DN	CK: GC	NEG NO.:

REVISIONS	STATE DISTRICT	FEDERAL REGION	FEDERAL AID PROJECT	SHEET
12-00 3-03	AUSTIN	6		553
	COUNTY		CONTROL-SECT-JOB	HIGHWAY
	WILLIAMSON		0683-06-027	SH 45 LOOP 1

DN:
CK:
DW:
CK:
DATE:
ACC:
FILE:
LEVELS

1	2	3	4	5	6	7	8			12	13	14	15	16	
17	18	19	20	21	22	23	24	25	26	27	28	29	30	31	32
33	34	35	36	37	38	39	40	41	42	43	44	45	46	47	48
49	50	51	52	53	54	55	56	57	58	59	60	61	62	63	

71D

DISCLAIMER
The use of this standard is governed by the "Texas Engineering Practice Act". No warranty of any kind is made by TxDOT for any purpose whatsoever. TxDOT assumes no responsibility for the conversion of this standard to other formats or for incorrect results or damages resulting from its use.

SERVICE ENCLOSURE NOTES

VIII. Service Assembly Enclosures. All service assemblies and enclosures shall be UL Listed for the intended purpose.

A. Shop built or shop assembled service assemblies (all types except Type T and Type D without lighting contactor or enclosure mounted photo cell) and all auxilliary equipment enclosures mounted with service equipment and paid for as part of Item 628, "Electrical Services", shall be built or assembled by a UL Listed Industrial Control Panel shop and shall have a unique serial numbered UL Label with the words "LISTED ENCLOSED INDUSTRIAL CONTROL PANEL". The same or an additional label shall have the name, location, and phone number of the shop, the UL file number of the shop, the shop order or drawing number, date of manufacture or assembly, and the line voltage. The service assembly enclosure shall also be labeled "SUITABLE ONLY FOR USE AS SERVICE EQUIPMENT".

B. Conduit entries into the top of enclosures shall have threaded hub. Conduit entries through the equipment mounting back plate will not be allowed.

C. All service enclosure front doors shall be permanently labeled "DANGER HIGH VOLTAGE". Label shall be a self sticking type, intended for outdoor installation. Lettering style, layout and colors of red, black and white shall be as required by OSHA. Label letters shall be 1 to 1 1/2 inches high or as high as the enclosure door width will permit for smaller services. Separate or auxiliary lighting enclosures need not be OSHA labeled when mounted in the same viewing plane as the service enclosure front door. Where only one type of load is served by the service, the service door shall be marked using duo-colored plastic labels or self adhesive vinyl weather resistant labels, minimum of 1 inch high; applied in a neat and workmanlike manner. On the label will be the service number shown on the plans as well as identifying the load served specifically (i.e. lighting, landscaping, signals, traffic management or other wording as directed by the Engineer). Safety switches need not be OSHA labeled unless specifically required by the serving utility.

D. Type GS enclosures will only be allowed for service Types D and T without an enclosure mounted photocell and/or lighting contactor and the Type C panelboard. This spec will allow an "off the shelf" product meeting these specifications to be used. Type GS enclosures shall be made from pre-galvanized steel sheeting, hot dipped galvanized steel, or powder coat painted steel unless shown differently on the plans. Steel enclosures shall be painted inside and outside; galvanized enclosures may be painted. Unless otherwise approved by the Engineer, painted enclosures shall be gray, beige, white or light green. Panelboard/loadcenter enclosures shall meet UL type 3R requirements, shall have a dead front trim, and an outer padlockable door preventing unauthorized persons from operating contained equipment. Galvanized steel is no longer allowed for Types A,C,or custom-built D or T enclosures. If GS is shown in the descriptive code for any of these, an AL shall be provided.

E. Type AL enclosures for service Types A and C shall meet UL type 3R requirements and shall also meet additional requirements of this paragraph. The enclosure shall have both a main disconnect remote operator handle and a door latch handle. Die-cast handles are not acceptable. The main disconnect remote operator shall be flange-mounted, shall interlock the door when in the "on" position, and shall be padlockable in both the "on" or "off" positions. Door latch shall latch at two or more points, operate by a handle separate from disconnect switch and be capable of being locked. Door closure clamps will not be allowed. Lock must be keyed to Master #2195. All the enclosures shall have either a continuous stainless steel piano hinge with stainless steel pin or enclosures less than 30 inches may have two heavy duty hinges, those over 30 inches must have three. Heavy duty two and three point hinges shall have a 0.185 inch minimum diameter electro-zinc plated steel pin or a stainless steel pin. Two point hinged doors shall be rated for 56 lbs of loading. Three point hinged doors shall be rated for 70 lbs of loading. The door shall have an attached data pocket constructed of either thermoplastic or metal. Pocket shall be 12" x 12", unless that size will not fit in enclosure. The pocket shall then be as large as possible, as approved by the Engineer, and mechanically attached with stainless steel nuts and bolts, or stainless steel or aluminum rivets. Enclosure shall include an equipment mounting panel installed inside the enclosure on collar studs or tapped bosses, and constructed of a minimum 12 guage galvanized steel. Equipment mounting panels shall not be painted. Enclosure shall have factory installed external mounting feet. Enclosure door shall be capable of opening at least 130 degrees, with arm or other approved means to hold the door open. Only the enclosure exterior will be primed and painted. Paint color shall be beige or gray and shall be powder coat paint as shown below. Condensation drainage shall be provided in the bottom of the enclosure before leaving the factory. The Contractor shall prepare and submit a schematic drawing unique to an individual service. The approved drawing shall be laminated and placed in the document pocket of the service at the time of shipment to the job site. All applicable wiring diagrams and plan sheet layouts for all equipment and branch breaker circuits supplied by that service shall also be laminated and placed in the document pocket prior to shipping. Type AL enclosures for Type D and T services with enclosure mounted photocell and/or lighting contactor shall have the loadcenter interior mounted in an enclosure with properly adapted dead front trim. Types D and T shall not have a loadcenter exterior "can" mounted inside another enclosure meeting these specifications. (Do not put one enclosure inside another enclosure). Types D and T with enclosure mounted photocell and/or lighting contactor shall meet the additional requirements of this paragraph except that remote-operating handle will not be provided.

F. Type SS enclosures for Type A and C shall meet all the requirements above for their respective type AL. Type SS enclosures for D and T shall meet all the requirements above for their respective type AL. Stainless Steel shall not be painted.

G. PS enclosure shall be as detailed and specified on ED(8). Galvanized steel will not be allowed for any pedestal service. If GS is shown in the descriptive code on AL will be provided.

IX. Powder Coat Paint. Powder coating shall be either a polyester thermosetting resin, a zinc rich primer with a TGIC (triglycidyl isocyanurate) powder overcoating, or a zinc-rich epoxy powder, applied by either electrostatic spray or fluidized bed immersion, high temperature oven cured, high density, low gloss, 4 mil thick (minimum), coating. Adhesion shall meet the 5A or 5B classifications of ASTM D3359. Finish shall be uniform in appearance and free of scratches.

X. Main Disconnect. Main disconnect device shall be a circuit breaker, as specified in the Electrical Service Data, shall be two or three pole, and rated for the voltage and amperage specified. Circuit breaker shall be an UL Listed thermal-magnetic circuit breaker controlled by flange-mounted remote operator in the service assembly enclosure when required. Circuit breakers shall have a minimum interrupting rating of 10,000 Amps. When the utility company provides a transformer larger than 50 KVA, Contractor shall verify that the available fault current is less than the circuit breaker amps interrupting capacity (AIC) rating and shall provide documentation from the Utility to the Engineer. Documentation shall be submitted at the same time as other electrical submittals. Circuit breaker shall be UL Listed to UL489. No backfed breakers will be allowed for use as a main disconnect.

XI. Control Circuit. Control circuit protection shall be 15 amp circuit breaker.

XII. Control Station ("H-O-A" Switch). Control station shall be a maintained-contact, three position selector switch in an UL type enclosure. Switch shall be rated 600 volts and shall be fitted with "Hand-Off-Auto" legend.

XIII. Photo Electric Control. Photo electric control shall consist of a photocell, internal lightning arrester, and relay or bimetallic switch mounted inside a weatherproof enclosure with standard 3-prong twist lock photocell plug and receptacle. The enclosure shall be made of poly-acrylic with clear acrylic window. Enclosure chassis shall be molded thermosetting plastic. The photocell shall have a polyethylene gasket, and shall have a hermetically sealed cadmium sulfide cell. The arrester shall have an enclosed type expulsion arrester rated 2.0 kV sparkover with 5,000 amps follow-through. Relay or switch shall be time delay type with normally closed contacts. Photo electric control shall be rated a minimum of 1800 VA, voltage as required. Enclosure mounted photocells shall be the same as above except that the photocell shall be mounted inside the enclosure. The enclosure shall have two acrylic paned windows, or other material approved by the Engineer, one on each side of the enclosure. Each window shall be rectangular approximately one inch by two inches, round 2 inch diameter, or as otherwise approved by the Engineer. Bracket and photocell's receptacle will be mounted inside enclosure next to each window. Except for window side, 2" of clearance is required on all sides of photocell for ease of replacement. The photocell's receptacle is held in place by two mounting screws on bracket and located next to each window of the enclosure. The 3-prong twist lock photocell shall be mounted in a position to receive light from the window closest to the photocell. The photocell shall be mounted in a position to receive light from one window. Top of pole mounted photocells shall be mounted as shown on ED(4). The Contractor shall be responsible for proper operation of the photo-electric control. The Contractor shall move and/or adjust or shield the photocell from stray or ambient nighttime light or shall make any other adjustments required for proper operation. The photocell shall face North when practicable. Unless otherwise shown on the plans, the photocell shall turn on the illumination system at 1.0 +(-) 0.5 footcandle and turn off the illumination system at two footcandles higher than turn on.

XIV. Lighting Contactor. Lighting contactor shall be a UL Listed NEMA rated lighting contactor, two-pole or multipole as required, electrically held type designed to control high pressure sodium lighting loads, with silver alloy double break contacts rated at 240 volts, 480 volts or 600 volts as required. Lighting contactor shall not be the DIN rail mounted type.

XV. Power Distribution Terminal Blocks. Power distribution terminal blocks shall be rated for 600 volts and shall be used for line side connections to branch circuit breakers where more than one circuit breaker is required. Lugs on blocks shall be properly sized for conductors being used. Only one conductor shall be placed under each lug.

XVI. Neutral/Ground Bus. Neutral/Ground bus shall be a factory made bus permanently bonded to the enclosure with properly sized lugs for grounding and neutral conductors.

SCHEMATIC LEGEND

1 - Safety Switch (when required)
2 - Meter (when required)
3 - Service Assembly Enclosure
4 - Main Disconnect Breaker (See Electrical Service Data)
5 - Omit
6 - Circuit Breaker, 15Amp
7 - Auxiliary Enclosure
8 - Control Station ("H-O-A" Switch)
9 - Photo Electric Control (enclosure-mounted shown)
10 - Lighting Contactor
11 - Power Distribution Terminal Blocks
12 - Neutral/Ground Bus
13 - Branch Circuit Breaker (See Electrical Service Data)
14 - Circuit Breaker Panelboard (See Electrical Service Data) (If Type C is shown as AL or SS on descriptive code, this is the service assembly enclosure only. Panelboard enclosure is GS unless otherwise noted.
15 - Load Center

——— Power Wiring
– – – Control Wiring
—N— Neutral Conductor (when required) serve 120 v. loads only)
—G— Equipment grounding conductor-always required

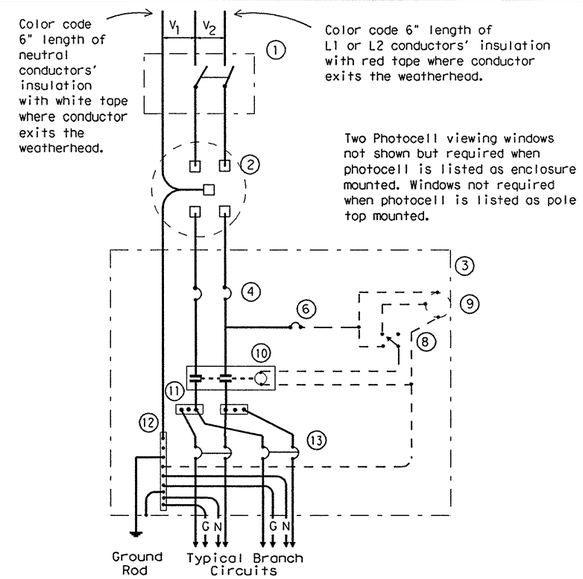

SCHEMATIC TYPE A
THREE WIRE

Maximum feeder circuit size (High Mast Poles): 100 amps for two pole 480V, 125 amps for one or two pole 120V or 240V. Maximum branch circuit size: 50 amps.

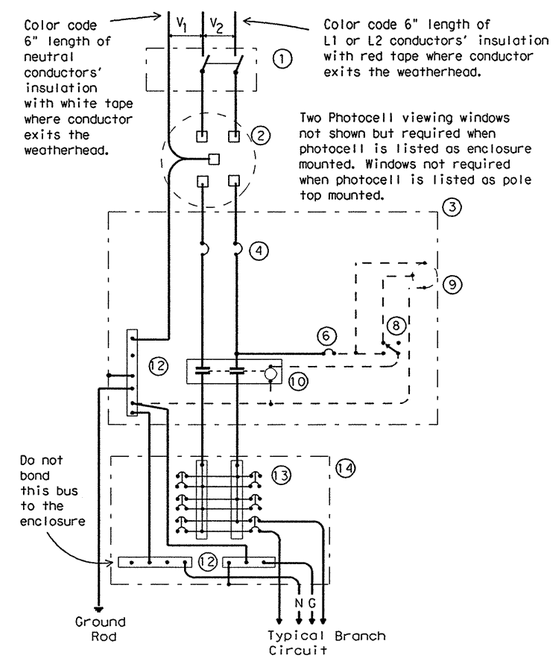

SCHEMATIC TYPE C
THREE WIRE

Maximum feeder circuit size (High Mast Poles): 100 amps for two pole 480V, 125 amps for one or two pole 120V or 240V. Maximum branch circuit size: 50 amps.

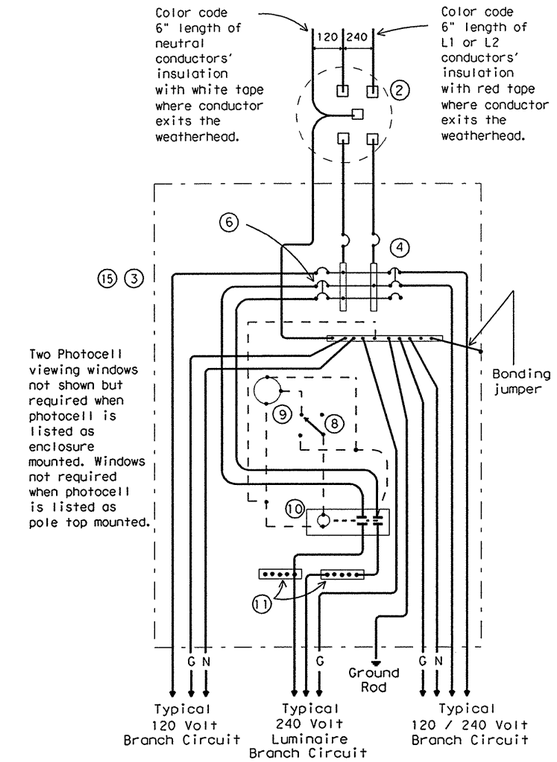

SCHEMATIC TYPE D
120/240 VOLTS - THREE WIRE

Install photocell and lighting contactor when shown on Electrical Service Data. See Type D service notes.

TYPE D SERVICE NOTES

Photocell and lighting contactor shall be located either in the same UL type 3R enclosure with load center or, if approved by Engineer, in separate enclosure. There shall be a window on each side of enclosure to allow operation of photocell. Both photocell contactor and breaker area shall have dead front trim. Enclosure, except for RT and PS supports, shall not exceed 36 inches in height or 16 inches in width unless approved by the Engineer. Ty D load center with lighting controls or TY D separate lighting control enclosure shall have power distribution blocks for a minimum of 4, #8 conductors per phase.

STANDARD PLANS
TEXAS DEPARTMENT OF TRANSPORTATION
Traffic Operations Division

ELECTRICAL DETAILS- SERVICE ENCLOSURE & NOTES

ED(5)-03

©TxDOT April 1998		DN: KB	CK: JW	DW: DN	CK: GC		
REVISIONS 12-00 3-03	STATE DISTRICT	FEDERAL REGION	FEDERAL AID PROJECT				SHEET
	AUSTIN	6					554
	COUNTY			CONTROL-SECT-JOB			HIGHWAY
	WILLIAMSON			0683-06-027			SH. 45 LOOP 1

71F

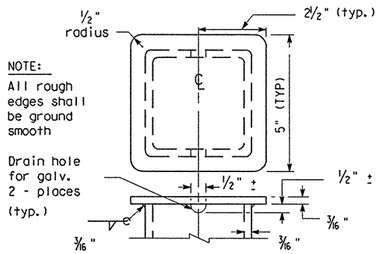

NOTE:
All rough edges shall be ground smooth

Drain hole for galv. 2 - places (typ.)

TOP OF POLE
TYPE SF & SP

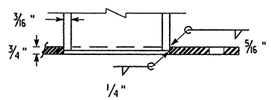

BOTTOM OF POLE
TYPE SF & SP

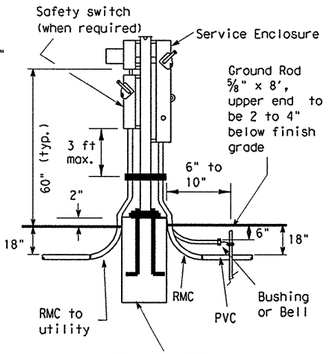

SERVICE SUPPORT
TYPE SP (U)
UNDERGROUND SERVICE
WITH SAFETY SWITCH

Color code 6" of grounded neutral conductors insulation with white tape where conductor exits the weatherhead. Color code 6" of L1 or L-2 Hot-ungrounded conductors insulation with red tape where conductor exits the weatherhead. Conductor free length, 12" min., 18" max.

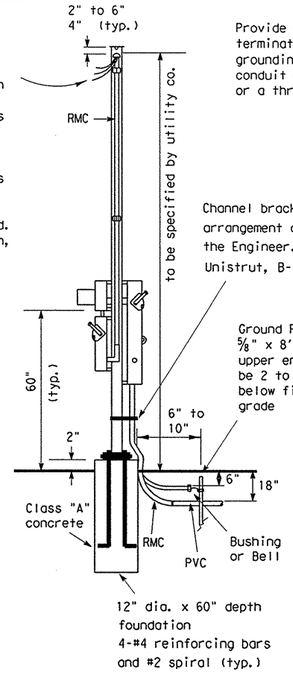

Provide grounding bushings on all metal conduits, terminate bonding jumpers(min. #6 AWG. Copper) to grounding bus. Grounding bushing not required when conduit end is fitted with a conduit sealing hub or a threaded type of boss such as a meter hub.

Channel bracket or other arrangement approved by the Engineer. (Kindorf, Unistrut, B-line or equal.)

Ground Rod 5/8" x 8', upper end to be 2 to 4" below finish grade

SERVICE SUPPORT
TYPE SP (O)
OVERHEAD SERVICE
WITH SAFETY SWITCH

Stand off type conduit support hardware shown. Provide when required by the utility.

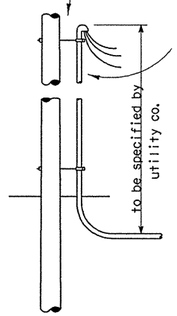

Conduit support spacing, 3' from the ends, max. and 5' in between unless otherwise called for by the utility.

UNDERGROUND RISER
AT UTILITY POLE
(for underground service)

NOTES:

1. Support Type SP and SF: Fabricated from 4" x 4" x 3/16 " square structural tubing, ASTM A500 Grade A or G or equal. Base plate shall be 3/4 " plate, ASTM A36 or equal. All equipment and conduit shall be mounted on galvanized channel strut, 1 1/2 " x 1 5/8 " x 12 guage galvanized steel channel (Unistrut, Kindorf, B-line or equal) clamped with channel hardware, bolted or welded to vertical member as approved by the Engineer.
2. Paint field cut ends of all channels with zinc-rich paint.
3. All Steel Poles (SP and SF) shall be hot-dip galvanized after fabrication. Poles for overhead service shall be fitted with eyebolt or similar fitting, as approved by the utility company, for attachment of sevice drop to the pole.
4. All conduit and conductors attached to the electrical service and within 12 inches of the electrical service will not be paid for directly, but shall be subsidiary to the electrical service. All conduit and conductors from the utility company pole to the point 12 inches from the electrical service, including conduit and conductors required for the utility pole riser when furnished by the Contractor, will be paid for separately.
5. All mounting hardware and installation details of services shall be in accordance with utility company specifications.
6. Anchor bolts for underground service supports shall be 3/4" x 18" x 4" (dia. x length x hook length). Anchor bolts for overhead services shall be 3/4" x 56" x 4". Anchor bolts shall be provided with leveling nuts.
7. Conduit for grounding electrode conductor (ground rod wire) shall be 1/2" PVC. All other conduit on electrical services shall be rigid metal conduit. Service entrance conduit size shall be as shown elsewhere. Conduit for branch circuit entry to enclosure shall be the same size as that shown on the layout sheets for branch circuit conduit. Rigid metal conduit shall extend to the rigid metal elbow and then be coupled to the type conduit shown on the layout for that particular branch circuit. RMC shall have grounding bushings in enclosures.
8. If pole is painted, each separate painted piece shall have a bonding jumper attached to a tapped hole.
9. Sheet metal screws are not allowed for bonding. Provide 1/4-20 machine screws. Remove all non-conductive material at contact points. Terminate bonding jumper using listed device. Bonding jumper min. #6 AWG Copper. Make up all threaded bonding connections wrench tight.
10. Conduits entering enclosure from underground shall be sealed at both ends. Silicone sealant will not be allowed.
11. Ground rod clamp to be UL listed for direct burial.
12. Service entrance conductors shall exit separately bushed non-metallic openings in weatherhead.
13. Free conductor at weatherhead to be 12 in. min., 18 in. max., or as required by utility. Color code grounded-neutral conductor with white tape covering 6 in. of conductor. Color code L1 or L2 Hot un-grounded conductor with red tape covering 6 in. of conductor. Service drop and service entrance conductors must not contact metal pole in such a manner as to result in abrasion of insulated conductors.
14. Conduit support spacing to be max. 3 ft. from ends, and max. 5 ft. in between.
15. Shop drawings are not required for service support structure unless specifically stated elsewhere or as directed by the Engineer.
16. Service enclosure to be labeled as specified on ED(5) VIII C.
17. Liquidtight flexible metal conduit (LFMC) may be used between the meter and service enclosure when they are mounted 90 to 180 degrees to each other. LFMC shall be the same size as service entrance conduit. LFMC shall not exceed 3 ft. and shall be securely supported within one foot of each end. LFMC shorter then 12" need not be strapped. Each end of LFMC must have a grounding bushing or be terminated with a grounding fitting. A neutral conductor must be installed within the LFMC. Bend in LFMC shall not exceed 180 degrees. A pull test is required on all installed conductors, at least six inches of free conductor movement shall be demonstrated to the satisfaction of the Engineer.

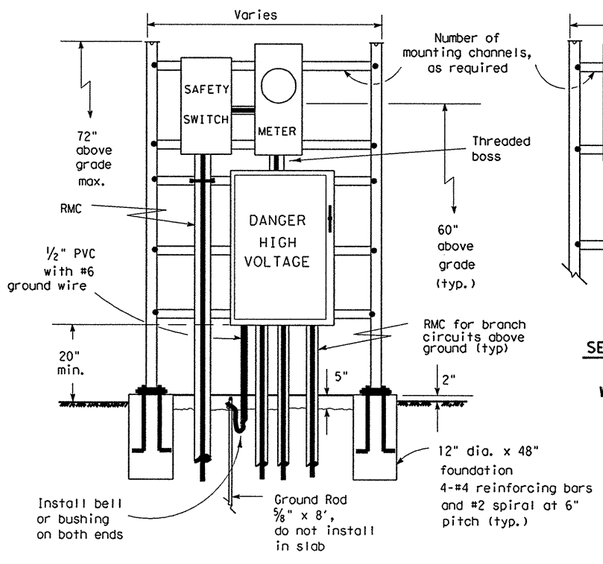

SERVICE SUPPORT TYPE SF (U)
UNDERGROUND SERVICE
WITH SAFETY SWITCH
(Typical Arrangement)

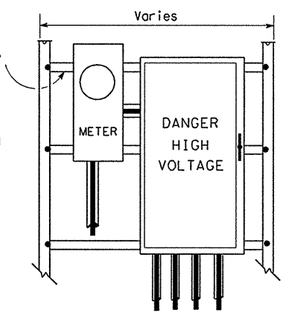

SERVICE SUPPORT TYPE SF (U)
UNDERGROUND SERVICE
WITHOUT SAFETY SWITCH

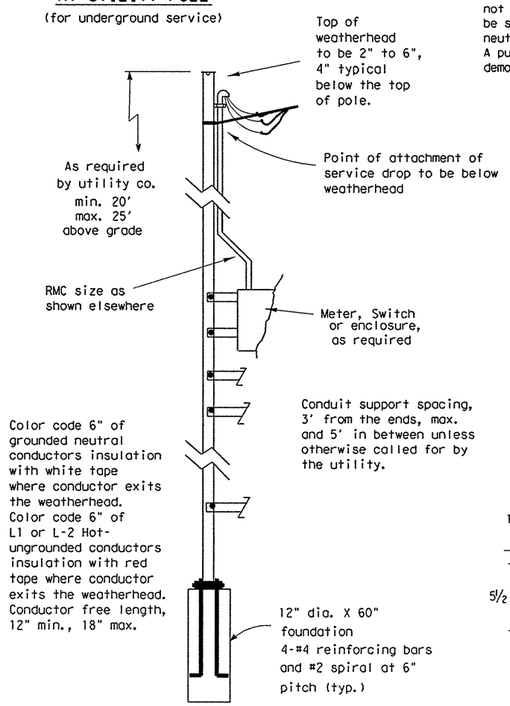

SERVICE SUPPORT TYPE SF (O)
OVERHEAD SERVICE

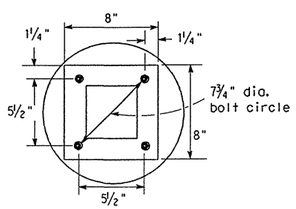

BASE PLATE DETAIL
TYPE SF & SP

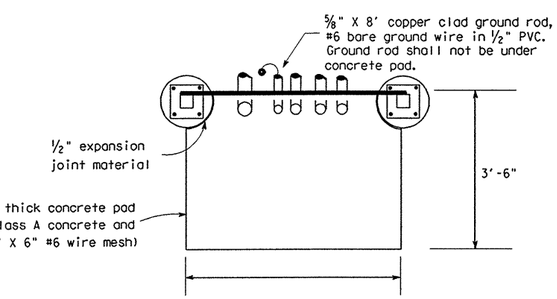

SERVICE SUPPORT TY SF (O) & SF (U)
TOP VIEW

5/03 Revision
1 Revised notes.

STANDARD PLANS
TEXAS DEPARTMENT OF TRANSPORTATION
Traffic Operations Division

ELECTRICAL DETAILS- SERVICE SUPPORT TYPES SF & SP

ED(6)-03

© TxDOT January 1992 DW: KB CK: JW DN: DN CK: GC NEG NO.:

REVISIONS	STATE DISTRICT	FEDERAL REGION	FEDERAL AID PROJECT	SHEET
4-98	AUSTIN	6		555
12-00				
3-03	COUNTY		CONTROL-SECT-JOB	HIGHWAY
5-03	WILLIAMSON		0683-06-027	SH 45 LOOP 1

71F

DISCLAIMER
The use of this standard is governed by the "Texas Engineering Practice Act". No warranty of any kind is made by TxDOT for any purpose whatsoever. TxDOT assumes no responsibility for the conversion of this standard to other formats or for incorrect results or damages resulting from its use.

DN:LR CK:CW DW:DN CK:MT
ID: DATE:
ACC: d58hplc/usr/d580504
FILE:
LEVELS

DISCLAIMER
The use of this standard is governed by the "Texas Engineering Practice Act". No warranty of any kind is made by TxDOT for any purpose whatsoever. TxDOT assumes no responsibility for the conversion of this standard to other formats or for incorrect results or damages resulting from its use.

NOTES:

1. Luminaire conductors shall not be looped through controller cabinet.
2. Electrical system to include an equipment grounding conductor noted here as "G". All exposed metal parts are to be bonded to grounding conductor.
3. Photocell, when required, shall be mounted at top of pole or in enclosure as shown on ED(4) and ED(5) and as required by descriptive code.
4. Roadway lighting fixtures, when required, shall be in accordance with the material and construction methods of the Item, "Roadway Illumination Assemblies" except for the test period for proper operation of the luminaires. Installed roadway lighting luminaires and internally lighted street name signs shall be tested for proper operation as a part of the associated traffic signal system.
5. Internally lighted street name signs (ILSN), when required, shall be in accordance with the Item "Internally Lighted Street Name Signs". Because of the electrical isolation of ILSN hinges, a #12 green grounding conductor shall be run to the ILSN fixture.
6. Install ground rod at alternate location when directed by the Engineer. Maintain a minimum of 8 ft in contact with the earth.
7. Liquidtight flexible metal conduit (LFMC), may be used when meter and service enclosure are mounted 90 to 180 degrees to each other. LFMC shall be same size as service entrance conduit. LFMC shall not exceed 3 ft. and shall be securely supported within one foot of each end. No strap required for a LFMC shorter than 12". Each end of LFMC must have a grounding bushing or be terminated with a grounding fitting. A neutral conductor must be installed within the LFMC. Bend in liquidtight flexible metal conduit shall not exceed 180 degrees.
8. Minimum embedment depth as per Item 627 Treated Timber Poles.
9. Pole to be set plumb.
10. Back fill thoroughly tamped in 6 in. lifts. Place 6 inches additional backfill above grade around pole base to allow for settling, as per Item 627.
11. Excess pole length shall be trimmed from the top at a slope to aid water run off.
12. Gain pole two places for each meter, service, separate or auxiliary enclosure. See ED(4) for details.
13. All illumination and power conductors to be pull tested and megged. Do not meg traffic signal cable.
14. Enclosures are to be locked, and ground box covers are to be bolted before power is applied to the circuit.
15. Conduits entering top of enclosures to be fitted with conduit sealing hub or threaded boss, such as meter hub. Off-set nipple, when required, shall not be zinc-die-pressure cast. All metal conduits not connected to conduit sealing hub, or threaded boss must have a grounding bushing. Terminate bonding jumper to ground bus. All conduits entering enclosures shall be sealed. Silicone shall not be allowed.

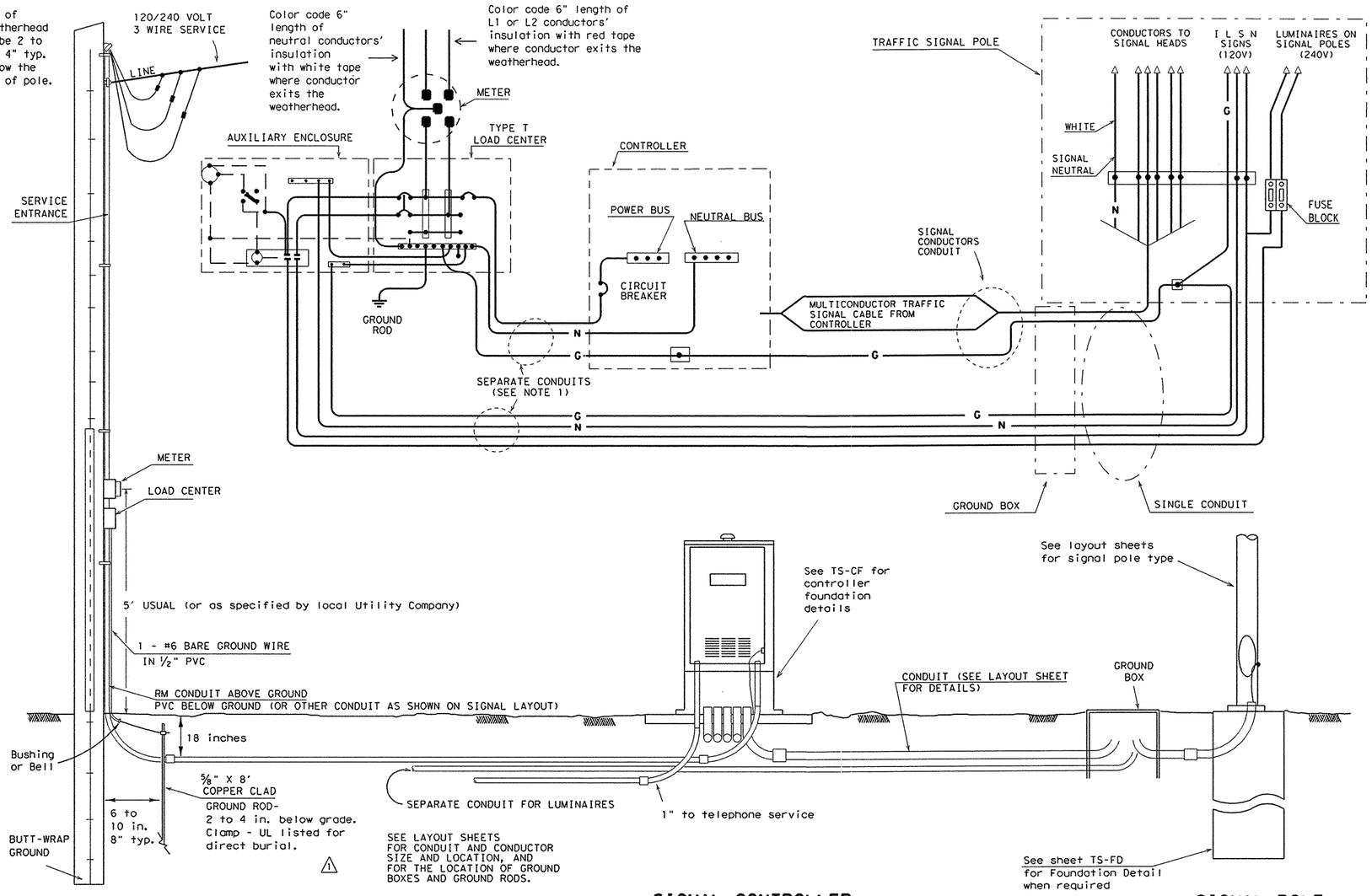

ELECTRICAL SERVICE

(TYPE T TIMBER POLE SHOWN AS EXAMPLE, SEE ELECTRICAL DETAILS, LAYOUT SHEETS, AND ELECTRICAL SERVICE DATA SHEET FOR SERVICE REQUIRED AND FOR DETAILS.)

SIGNAL CONTROLLER

SIGNAL POLE

Unless shown elsewhere in the plans, electrical service data for Types D and T shall be as follows.

ELECTRICAL SERVICE DATA

ELECTRICAL SERVICE DESCRIPTION(SEE ED(4))	SERVICE CONDUIT SIZE (RMC)	SERVICE CONDUCTORS NO./SIZE	SAFETY SWITCH AMPS	MAIN DISCONNECT CKT. BRK. POLE/AMP	TWO-POLE CONTACTOR AMPS ***	PANELBD./ LOADCENTER AMP RATING (MIN)	CIRCUIT NO.	BRANCH CKT. BRK. POLE/AMPS	KVA LOAD
TY D (120/240)070(NS)AL(E)**(*)	1 1/4 ⚠1	3/#4	N/A	2P/70	30	100	T.S. Lighting	1P/50 2P/15	<7.1
TY T (120/240)000(NS)GS(E)**(*)	1 1/4 ⚠1	3/#4	N/A	None	30	70	T.S. Lighting	1P/50 2P/15	<7.1

*** Eliminate photocell, contactor and seperate enclosure if lighting, or internally lighted signs are not required by plans
** See descriptive code in estimate for service support type.
* See descriptive code in estimate for overhead or underground service.

5/03 Revision
⚠1 Revised notes.

STANDARD PLANS
TEXAS DEPARTMENT OF TRANSPORTATION
Traffic Operations Division

ELECTRICAL DETAILS- TYPICAL TRAFFIC SIGNAL SYSTEM DETAILS

ED(7)-03

©TxDOT January 1992 DN: KB CK: JW DW: DN CK: GC MEG NO.:

REVISIONS	STATE DISTRICT	FEDERAL REGION	FEDERAL AID PROJECT	SHEET
4-98 12-00 3-03 5-03	AUSTIN	6		556
	COUNTY		CONTROL-SECT-JOB	HIGHWAY
	WILLIAMSON		0683-06-027	IH 35 (SPUR 1)

DN: LR CK: CW DW: DN CK: MT
DATE:
ACC: d58hplc/usr/d580504
FILE:
LEVELS

DISCLAIMER
The use of this standard is governed by the "Texas Engineering Practice Act". No warranty of any kind is made by TxDOT for any purpose whatsoever. TxDOT assumes no responsibility for the conversion of this standard to other formats or for incorrect results or damages resulting from its use.

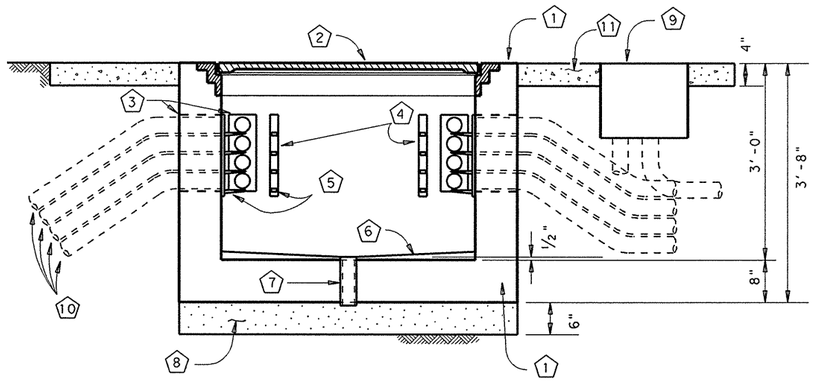

TYPICAL VERTICAL SECTION

1. Concrete ground box Type J - shall be 48" by 48" inside dimension and shall have AASHTO HS 20 wheel loading structural design. Fabricator shall submit shop drawings sealed by a Texas Licensed Structural Engineer. Shop drawings and calculations shall be for the box and lid as a unit.
2. Lid and ring shall be cast from Gray Iron in accordance with AASHTO M306, and shall be suitable for HS 20 loading or better. Proof-load testing certification in accordance with AASHTO M 306 shall be submitted. Lid shall have type T hinges and type G handles, and shall have a safety device to prevent accidental closing once the lid has been opened. Lid shall be cast with "TxDOT CONNUMICATIONS" in one inch lettering on top. Lid and ring shall be supplied together, and shall have no sharp edges. Shop drawings shall be submitted. (Neenah Foundry R-6662-TH, or equal.)
3. 18" by 9" knockout in concrete
4. Cable rack - Joslyn J5124, Chance C203-1124 or equivalent
5. Cable rach hooks - Joslyn J5131A, Chance C203-1131 or equivalent
6. Concrete drain invert, 1/2" pitch from center to walls
7. 3" drain
8. Filter material - Grade 3 aggregate or finer. See ITEM 302
9. RPM ground box, as called for in layouts, for electrical power conductors and traffic signal cables. See ED(3) for ground box details
10. Conduits (See layouts for number, details, specifications, and sizes)
11. Concrete riprap apron, Bid as ITEM 432. 1 cubic yard minimum

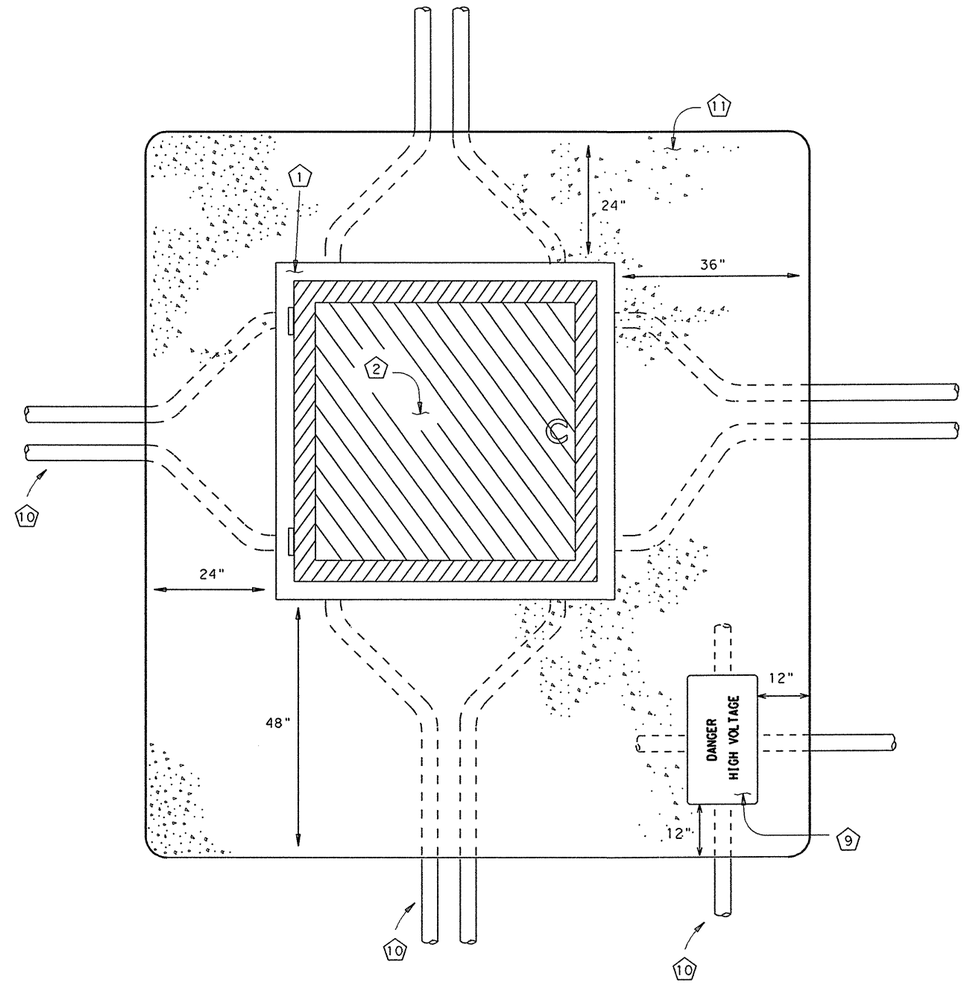

TYPICAL PLAN VIEW

GENERAL NOTES

1) Illumination, traffic signal and other conductors carrying full voltages (50 volts or greater) shall not enter the communications ground box, but shall be run into an adjacent RPM ground box, as shown in the detail.
2) Conductors in the Type J ground box shall be laid on the racks and secured in place with plastic ties. At no time shall any conductor be run through the center of the box. Contractor shall arrange conduit runs so cables shall enter and exit the box without violating the required bend radius or running throught the center of the box.
3) Riprap shown is the minimum required. Riprap shall extend to protect all conduits with less than the minimum allowed ground cover.
4) Conduits shall not extend inside the box more than 1", including the required bell end fitting or bushing. Conduits shall be securely grounted in place with Portland cement completely filling the knockout window around the conduits.
5) Rigrap and boxes shall be cast flat with a maximum slope of 0.25% (3" over 10').
6) Payment - concrete ground box Type J shall be bid as ITEM 628. RPM ground box and riprap shall be bid separately.

DISPLAYED
ACC:

Texas Department of Transportation
Traffic Operations Division

CONCRETE GROUND BOX (TYPE J) FOR TRAFFIC MANAGEMENT SYSTEMS

ED(11)-03

©TxDOT July 2000

DN: JM	CK:	DW: DN	CK: JM	NEG NO.:

REVISIONS	STATE DISTRICT	FEDERAL REGION	FEDERAL AID PROJECT	SHEET
9-00 12-00 3-03	AUSTIN	6		560
	COUNTY		CONTROL-SECT-JOB	HIGHWAY
	WILLIAMSON		0683-06-027	SH 45 LOOP 1

711

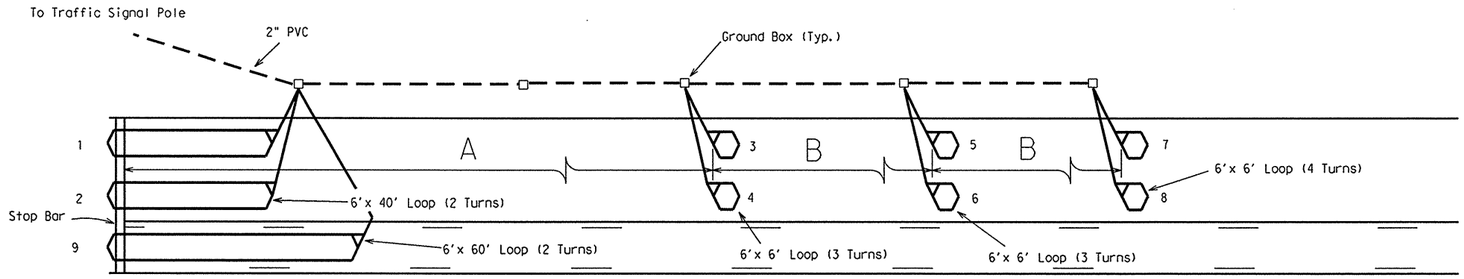

55 MPH (A=225', B=95') 60 MPH (A=275', B=100')
65 MPH (A=320', B=110') 70 MPH (A=350', B=125')

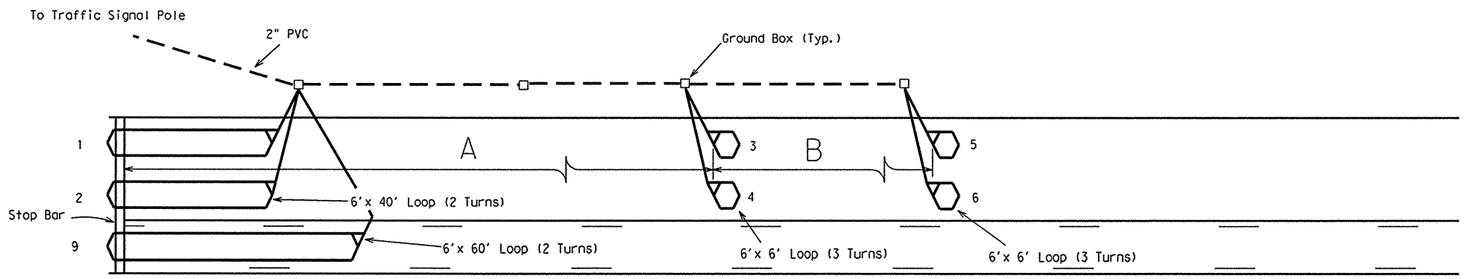

35 MPH (A=90', B=100') 40 MPH (A=110', B=130')
45 MPH (A=175', B=115') 50 MPH (A=220', B=130')

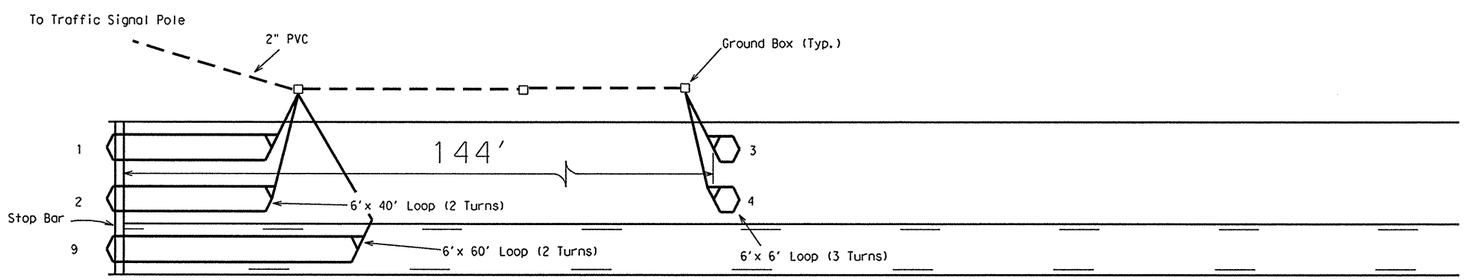

30 MPH

GENERAL NOTES:

Loops 1 and 2 shall be connected to the controller cabinet by means of the same loop lead-in (2/C #14 AWG).

Loops 3 thru 6 shall be connected to the controller cabinet by means of the same loop lead-in (2/C #14 AWG).

Loops 7 and 8 shall be connected to the controller cabinet by means of the same loop lead-in (2/C #14 AWG).

Loop 9 shall be connected to the controller cabinet by means of a loop lead-in (2/C #14 AWG). Loop 9 shall be placed only when a left turn lane exists.

LOOP WINDING DETAILS

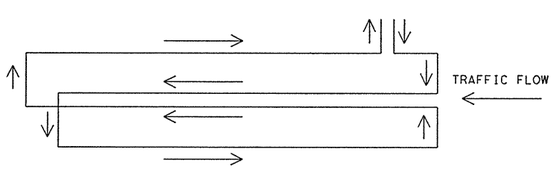

QUADRAPOLE LOOP

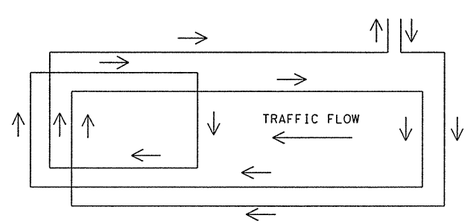

POWER HEADER LOOP

DISCLAIMER
The use of this standard is governed by the "Texas Engineering Practice Act". No warranty of any kind is made by TxDOT for any purpose whatsoever. TxDOT assumes no responsibility for the conversion of this standard to other formats or for incorrect results or damages resulting from its use.

DISPLAYED
1 2 3 4 5 6 7 8 9 10 11 12 13 14 15 16
17 18 19 20 21 22 23 24 25 26 27 28 29 30 31 32
33 34 35 36 37 38 39 40 41 42 43 44 45 46 47 48
49 50 51 52 53 54 55 56 57 58 59 60 61 62 63

ACC:

STANDARD PLANS
Texas Department of Transportation
Traffic Operations Division

LOOP DETECTOR PLACEMENT DETAILS

LD(2)-03

© TxDOT January 2003 DN: XXX CK: GRB DW: FDN CK: CAL

REVISIONS	STATE DISTRICT	FEDERAL REGION	FEDERAL AID PROJECT	SHEET
	AUSTIN	6		563
	COUNTY		CONTROL-SECT-JOB	HIGHWAY
	WILLIAMSON		0683-06-027	IH 35 LOOP 1

Arm Length	ROUND POLES					POLYGONAL POLES					Foundation Type
	D_B	D_{19}	D_{24}	D_{30}	① thk	D_B	D_{19}	D_{24}	D_{30}	① thk	
ft.	in.	in.	in.	in.	in.	in.	in.	in.	in.	in.	
20	10.5	7.8	7.1	6.3	.179	11.5	8.5	7.7	6.8	.179	30-A
24	11.0	8.3	7.6	6.8	.179	12.0	9.0	8.2	7.3	.179	30-A
28	11.5	8.8	8.1	7.3	.179	12.5	9.5	8.7	7.8	.179	30-A
32	12.5	9.8	9.1	8.3	.179	12.0	9.0	8.2	7.3	.239	30-A
36	12.0	9.3	8.6	7.8	.239	12.5	9.5	8.7	7.8	.239	36-A
40	12.0	9.3	8.6	7.8	.239	13.5	10.5	9.7	8.8	.239	36-A
44	12.5	9.8	9.1	8.3	.239	14.0	11.0	10.2	9.3	.239	36-A
48	13.0	10.3	9.6	8.8	.239	15.0	12.0	11.2	10.3	.239	36-A

Arm Length	ROUND ARMS					POLYGONAL ARMS				
	L_1	D_1	D_2	① thk	Rise	L_1	D_1	② D_2	① thk	Rise
ft.	ft.	in.	in.	in.		ft.	in.	in.	in.	
20	19.1	6.5	3.8	.179	1'-9"	19.1	7.0	3.5	.179	1'-8"
24	23.1	7.5	4.3	.179	1'-10"	23.1	7.5	3.5	.179	1'-9"
28	27.1	8.0	4.2	.179	1'-11"	27.1	8.0	3.5	.179	1'-10"
32	31.0	9.0	4.7	.179	2'-1"	31.0	9.0	3.5	.179	2'-0"
36	35.0	9.5	4.6	.179	2'-4"	35.0	10.0	3.5	.179	2'-1"
40	39.0	9.5	4.1	.239	2'-8"	39.0	9.5	3.5	.239	2'-3"
44	43.0	10.0	4.1	.239	2'-11"	43.0	10.0	3.5	.239	2'-6"
48	47.0	10.5	4.1	.239	3'-4"	47.0	11.0	3.5	.239	2'-9"

D_B = Pole Base O.D.
D_{19} = Pole Top O.D. with no Luminaire and no ILSN
D_{24} = Pole Top O.D. with ILSN w/out Luminaire
D_{30} = Pole Top O.D. with Luminaire
D_1 = Arm Base O.D.
D_2 = Arm End O.D.
L_1 = Shaft Length
L = Nominal Arm Length

① Thickness shown are minimums, thicker materials may be used.

② D_2 may be increased by up to 1" for polygonal arms.

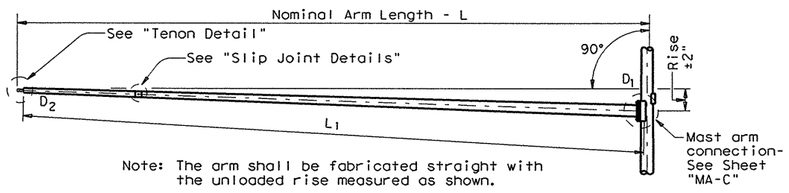

Note: The arm shall be fabricated straight with the unloaded rise measured as shown.

TRAFFIC SIGNAL ARM

(Fixed Mount)

VIBRATION WARNING

Mast Arms of approximately 40' or longer are subject to possible harmonic vertical vibrations in light wind conditions due to unusual combinations of signal numbers, weights or positions, arm-wind orientation, and arm-pole stiffness. Arms shall be visually inspected in 5 to 20 mph wind conditions after signal head installation and, if vertical movements with a total excursion (max positive to max negative) of more than approximately 8" are observed at arm tip, damping devices or other means shall be fitted to the arm(s). The necessary damping device(s) or other remedial measures shall be as recommended by the fabricator. Excessive vibrations shall not be allowed to continue for more than two days.

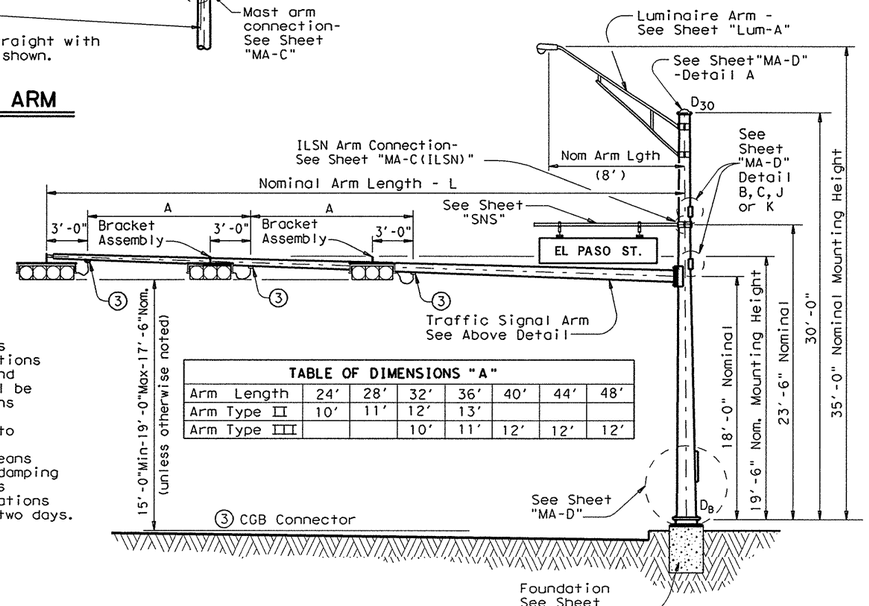

TABLE OF DIMENSIONS "A"							
Arm Length	24'	28'	32'	36'	40'	44'	48'
Arm Type II	10'	11'	12'	13'			
Arm Type III			10'	11'	12'	12'	12'

STRUCTURE ASSEMBLY

SHIPPING PARTS LIST

Ship each pole with the following attached: enlarged hand hole, pole cap, fixed-arm connection bolts and washers and any additional hardware listed in the table.

Nominal Arm Length	30' Poles With Luminaire		24' Poles With ILSN		19' Poles With No Luminaire and No ILSN	
	Above hardware plus: One (or two if ILSN attached) small hand hole, clamp-on simplex		Above hardware plus one small hand hole		See note above	
ft	Designation	Quantity	Designation	Quantity	Designation	Quantity
20	20L-80		20S-80		20-80	
24	24L-80		24S-80		24-80	
28	28L-80		28S-80		28-80	
32	32L-80		32S-80		32-80	
36	36L-80		36S-80		36-80	
40	40L-80	1	40S-80		40-80	
44	44L-80	3	44S-80		44-80	
48	48L-80	1	48S-80		48-80	

Traffic Signal Arms (1 per Pole) Ship each arm with the listed equipment attached

Nominal Arm Length	Type I Arm (1 Signal)		Type II Arm (2 Signals)		Type III Arm (3 Signals)	
	1 CGB connector		1 Bracket Assembly and 2 CGB Connectors ④		2 Bracket Assemblies and 3 CGB Connectors ④	
ft	Designation	Quantity	Designation	Quantity	Designation	Quantity
20	20I-80					
24	24I-80		24II-80			
28	28I-80		28II-80			
32			32II-80		32III-80	
36			36II-80		36III-80	
40					40III-80	1
44					44III-80	3
48					48III-80	1

Luminaire Arms (1 per 30' pole)

Nominal Arm Length	Quantity
8' Arm	5

④ Supply Option "A" unless otherwise noted

ILSN Arm (Max. 2 per pole) Ship with clamps, bolts and washers

Nominal Arm Length	Quantity
7' Arm	
9' Arm	

Anchor Bolt Assemblies (1 per pole)

Anchor Bolt Diameter	Anchor Bolt Length	Quantity
¾"	1'-6"	2
1 ¾"	3'-10"	5

Each anchor bolt assembly consists of the following: Top and Bottom templates, 4 anchor bolts, 8 nuts, 8 flat washers, 4 lock washers and 4 nut anchor devices (Type 2) per Standard Drawing "TS-FD".

Templates may be removed for shipment.

SHEET 1 OF 2

11/99 Revision

1 Changed to Facilitate new terminal strip enclosure

Texas Department of Transportation
Traffic Operations Division

TRAFFIC SIGNAL SUPPORT STRUCTURES

SINGLE MAST ARM ASSEMBLY

(80 MPH WIND ZONE)

SMA-80(1)-99

FILE: SMA-80.DGN	DN: MS	CK: JSY	DW: MMF	CK: JSY
© TxDOT August 1995	DISTRICT	FEDERAL AID PROJECT		SHEET
REVISIONS 5-96 11-99	AUSTIN			564
	COUNTY		CONTROL-SECT-JOB	HIGHWAY
	WILLIAMSON		0683-06-027	SH 45 LOOP 1

122A

DISCLAIMER:
The use of this standard is governed by the "Texas Engineering Practice Act". No warranty of any kind is made by TxDOT for any purpose whatsoever. TxDOT assumes no responsibility for the conversion of this standard to other formats or for incorrect results or damages resulting from its use.

LEVELS
1 2 3 4 5 6 7 8 9 10 11 12 13 14 15 16
17 18 19 20 21 22 23 24 25 26 27 28 29 30 31 32
33 34 35 36 37 38 39 40 41 42 43 44 45 46 47 48
49 50 51 52 53 54 55 56 57 58 59 60 61 62 63

FED ROAD DIST. | COUNTY | ACC: d48hpla:/usr/d482517 | LV=1.2 for English 1.3 for Metric

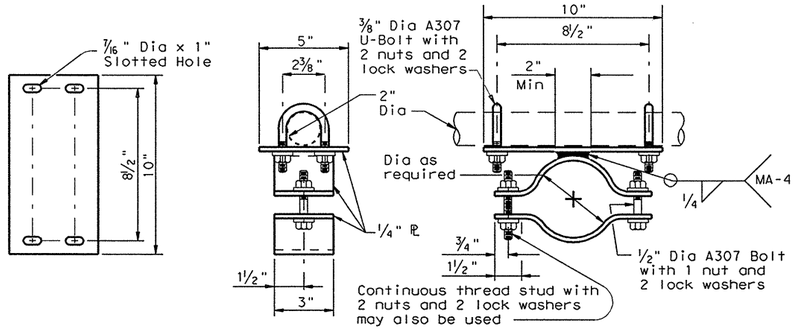

BRACKET ASSEMBLY DETAILS OPTION A

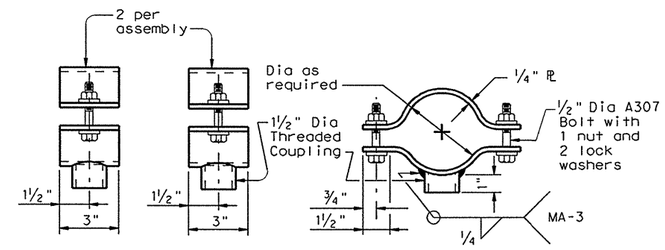

BRACKET ASSEMBLY DETAILS OPTION B

Stainless steel bands and cast bracket as in "Astro-Brac" with 1 1/2" Dia Threaded Coupling.

BRACKET ASSEMBLY OPTION C

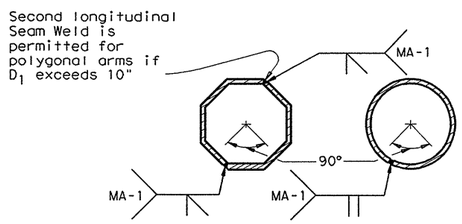

Longitudinal Seam Weld must be oriented within the lower 90° of the signal arm.

ARM WELD DETAIL

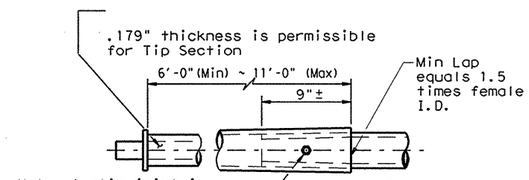

Note: A slip joint is permissible for arms 40' and greater in length. The slip joint shall be made in the shop, but may be match marked and shipped disassembled.

4 - 3/4" Dia holes and 1- 5/8" Dia galv A307 bolt. Tack weld nut to thread projection after making joint. Repair damaged galvanizing in accordance with the specifications.

SLIP JOINT DETAIL

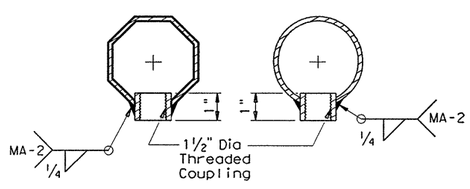

COUPLING DETAILS

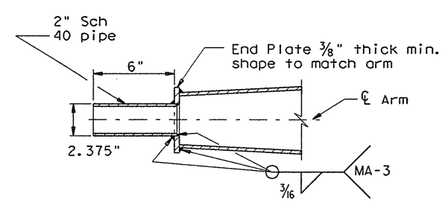

TENON DETAIL

GENERAL NOTES:

Design conforms to 1994 AASHTO Standard Specifications for Structural Supports for Highway Signs, Luminaires, and Traffic Signals and Interim Specifications thereto. Design Wind Speed equals 80 mph plus a 1.3 gust factor.

Poles are designed to support one 8'-0" luminaire arm, one 9'-0" internally lighted street name sign and one traffic signal arm with a length as tabulated. The specified luminaire load applied at the end of the luminaire arm equals 75 lbs vertical dead load plus the horizontal wind load on an effective projected area of 1.5 sq ft. The specified internally lighted street name sign load applied 4.5 ft from the centerline of the pole equals 85 lbs vertical dead load plus horizontal wind load on an effective projected area of 11.5 sq ft. The specified signal load applied at the end of the traffic signal arm equals 180 lbs vertical dead load plus the horizontal wind load on an effective projected area of 32.4 sq ft (actual area times drag coefficient).

See Standard Sheet "MA-D" for pole details, "MA-C" for traffic signal arm connection details, "MA-C (ILSN)" for internally lighted street name sign arm connection details, "LUM-A" for luminaire arm and connection details, "SNS" for internally lighted street name sign details, and "TS-FD" for anchor bolt and foundation details. See "MA-C" for material specifications.

Fabrication shall be in accordance with the Specifications and with the details, dimensions, and weld procedures shown herein. Weld references call for preapproved weld procedures which the Fabricator must obtain prior to fabrication. Miscellaneous welds which do not call for preapproved weld procedures are nevertheless subject to rejection for poor workmanship. Materials, fabrication tolerances, and shipping practices shall meet the requirements of this sheet and the Specifications.

Unless otherwise noted, all parts shall be galvanized in accordance with the Specifications.

Special design require submission of shop drawings in accordance with the item "Steel Structures".

Texas Department of Transportation
Traffic Operations Division

TRAFFIC SIGNAL SUPPORT STRUCTURES

SINGLE MAST ARM ASSEMBLY

(80 MPH WIND ZONE)

SMA-80(2)-96

FILE: SMA-80.DGN	DN: MS	CK: JSY	DW: MMF	CK: JSY
© TxDOT August 1995	DISTRICT	FEDERAL AID PROJECT		SHEET
REVISIONS	AUSTIN			565
5-96	COUNTY		CONTROL-SECT-JOB	HIGHWAY
	WILLIAMSON		0683-06-027	SH 29, LOOP 1

122B

DISCLAIMER:
The use of this standard is governed by the "Texas Engineering Practice Act". No warranty of any kind is made by TxDOT for any purpose whatsoever. TxDOT assumes no responsibility for the conversion of this standard to other formats or for incorrect results or damages resulting from its use.

LEVELS
1 2 3 4 5 6 7 8 9 10 11 12 13 14 15 16
17 18 19 20 21 22 23 24 25 26 27 28 29 30 31 32
33 34 35 36 37 38 39 40 41 42 43 44 45 46 47 48
49 50 51 52 53 54 55 56 57 58 59 60 61 62 63
FD
ACC: d48hplq:/usr/d482517
LV=1.2 for English 1.3 for Metric

ARM SIZE D_1 in.	ARM SIZE ǂ in.	A in.	B in.	C in.	D in.	E in.	CONN BOLT DIA in.
6.5	.179	12	9	9	6	1 ¾	1
7.5	.179	13	9	10	6	1 ¾	1
8.0	.179	14	10	11	7	2	1 ¼
9.0	.179	16	11	13	8	2	1 ¼
9.5	.179	17	12	14	9	2	1 ¼
9.5	.239	18	12	15	9	2	1 ¼
10.0	.239	18	12	15	9	2	1 ¼
10.5	.239	18	13	15	10	3	1 ½
11.0	.239	18	13	15	10	3	1 ½

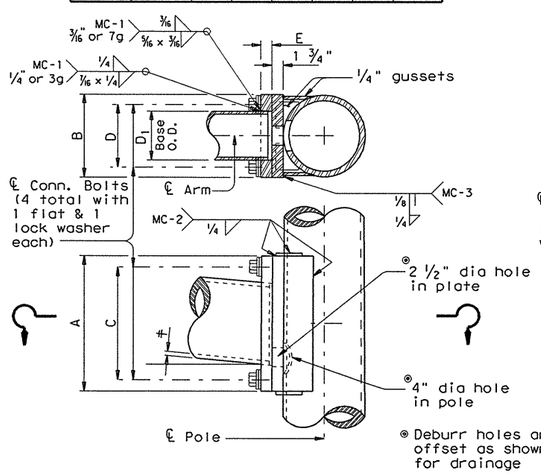

FIXED MOUNT DETAIL 1

ARM SIZE D_1 in.	ARM SIZE ǂ in.	A in.	F in.	CONN. BOLTS No. ea.	CONN. BOLTS Dia in.	PIN BOLTS No. ea.	PIN BOLTS Dia in.
6.5	.179	12	8	4	* ⅞	2	⅝
7.5	.179	14	8	4	1	2	⅝
8.0	.179	14	8	4	1	2	⅝
9.0	.179	16	10	4	1	2	⅝
9.5	.179	18	12	4	1 ¼	3	⅝
9.5	.239	18	12	4	1 ¼	3	⅝
10.0	.239	18	12	4	1 ¼	3	⅝

*1" Dia connection bolts are permissible

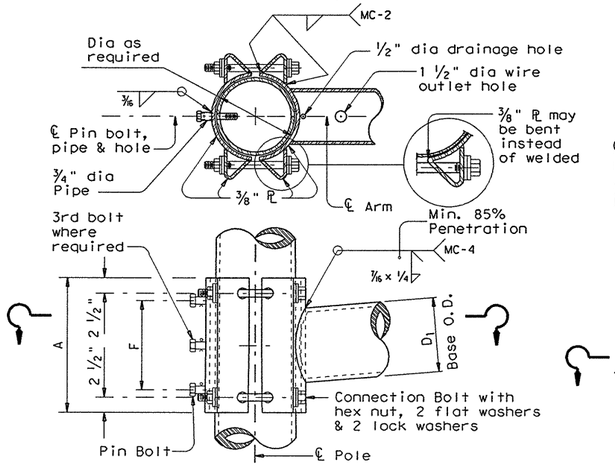

CLAMP-ON DETAIL 1

ARM SIZE D_1 in.	ARM SIZE ǂ in.	A in.	F in.	T in.	CONN. BOLTS No. ea.	CONN. BOLTS Dia in.	PIN BOLTS No. ea.	PIN BOLTS Dia in.
7.0	.179	12	8	¾	4	¾	2	⅝
7.5	.179	14	8	¾	4	¾	2	⅝
8.0	.179	14	8	¾	4	¾	2	⅝
9.0	.179	16	10	⅞	4	1	2	⅝
10.0	.179	18	10	⅞	4	1	2	⅝
9.5	.239	18	10	1	6	1	3	⅝
10.0	.239	18	10	1	6	1	3	⅝

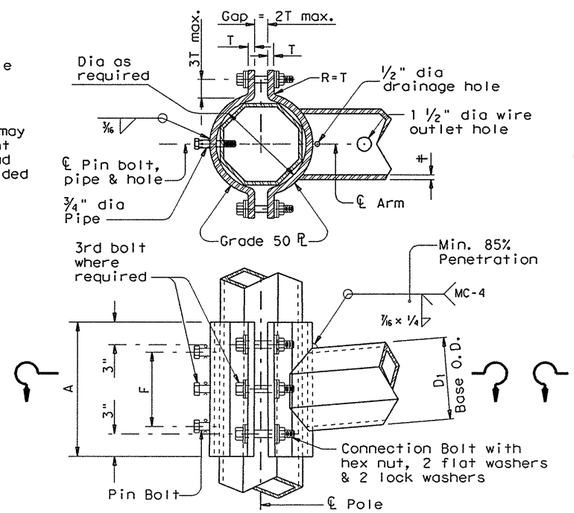

CLAMP-ON DETAIL 2

ARM SIZE D_1 in.	ARM SIZE ǂ in.	A in.	F in.	CONN. BOLTS No. ea.	CONN. BOLTS Dia in.	PIN BOLTS No. ea.	PIN BOLTS Dia in.
6.5	.179	12	8	4	1	2	⅝
7.5	.179	14	8	4	1	2	⅝
8.0	.179	14	8	4	1	2	⅝
9.0	.179	16	10	4	1	2	⅝
9.5	.179	18	12	6	1	3	⅝
9.5	.239	18	12	6	1	3	⅝
10.0	.239	18	12	6	1	3	⅝

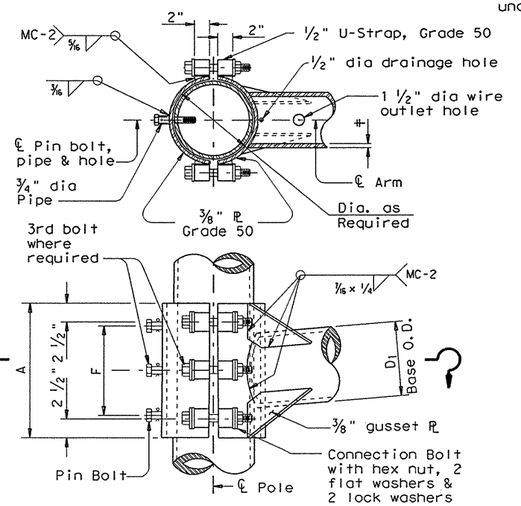

CLAMP-ON DETAIL 3

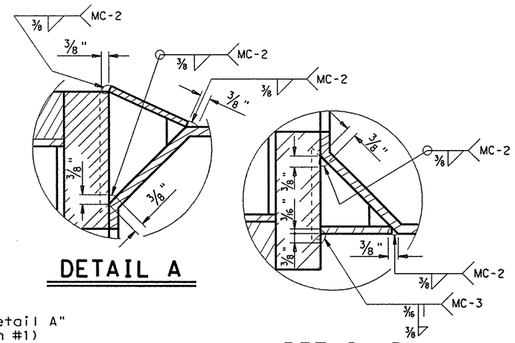

DETAIL A

DETAIL B

MATERIALS	
Round Shafts or Polygonal Shafts	ASTM A595 GR A, ASTM A570 GR 50, ASTM A607 GR 50, ASTM A572 GR 50 or A36M50
Plates (1)	ASTM A36 OR A572 GR 50 or A595(2) or A36M50
Connection Bolts	ASTM A325 except where noted
Pin Bolts	ASTM A325
Pipe	ASTM A53 GR A or B, or A501
Misc. Hardware	Galvanized steel or stainless steel or as noted

(1) Any of the materials listed for plates may be used where the drawings do not specify a particular Grade designation.

(2) If A595 material is used, it need not be cold worked to A595 requirments, but material must have 40 ksi minimum yield prior to fabrication.

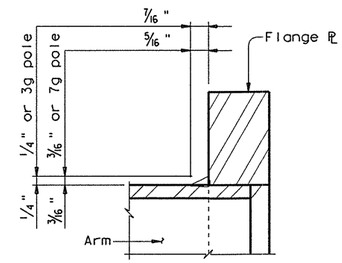

FIXED MOUNT ARM

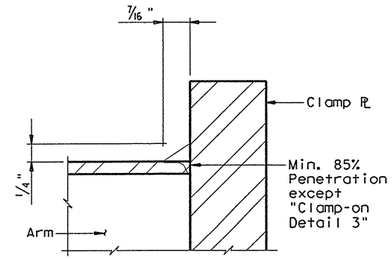

CLAMP-ON ARM

ARM BASE WELD DETAILS

GENERAL NOTES:

Clamp-on details are used for the second arm on dual mast arm assemblies. A Maximum 1 ½" wide vertical slotted hole may be cut in the front clamp plate to facilitate drainage during galvanizing. The slot shall be centered behind the arm and shall be no longer than the arm diameter minus 1"

Fixed mount details are used for single mast arm assemblies and for the first arm on dual mast arm assemblies.

Where duplicate parts occur on a detail, welds shown for one part shall apply to all similar parts on the detail.

Pin bolts are required to prevent rotation of clamp-on arms under design wind forces.

NOTE:

Pin bolts shall be A325 with threads excluded from the shear plane. Pin bolt and ¾" dia pipe shall have 7/16" dia holes for a ⅛" dia galvanized cotter pin. Back clamp plate shall be furnished with a ¾" dia hole for each pin bolt. An 11/16" dia hole for each pin bolt shall be field drilled through the pole after arm orientations have been approved by the Engineer.

Texas Department of Transportation
Traffic Operations Division

STANDARD ASSEMBLY FOR TRAFFIC SIGNAL SUPPORT STRUCTURES

MAST ARM CONNECTIONS

MA-C-09

FILE: MA-C.DGN	DN: MS	CK: JSY	DW: MMF	CK: JSY
© TxDOT August 1995	DIST	FED REG	FEDERAL AID PROJECT	SHEET
REVISIONS 5-96 5-09 Connection PL Thk E	AUSTIN	6		566
	COUNTY		CONTROL-SECT-JOB	HIGHWAY
	WILLIAMSON		0683-06-027	SH 45 LOOP 1

126A

DISCLAIMER:
The use of this standard is governed by the "Texas Engineering Practice Act". No warranty of any kind is made by TxDOT for any purpose whatsoever. TxDOT assumes no responsibility for the conversion of this standard to other formats or for incorrect results or damages resulting from its use.

LEVELS: 1 2 3 4 5 6 7 8 9 10 11 12 13 14 15 16 17 18 19 20 21 22 23 24 25 26 27 28 29 30 31 32 33 34 35 36 37 38 39 40 41 42 43 44 45 46 47 48 49 50 51 52 53 54 55 56 57 58 59 60 61 62 63

ACC: d48hplq:/usr/d482517

LV=1,2 for English 1,3 for Metric

DISCLAIMER
The use of this standard is governed by the "Texas Engineering Practice Act". No warranty of any kind is made by TxDOT for any purpose whatsoever. TxDOT assumes no responsibility for the conversion of this standard to other formats or for incorrect results or damages resulting from its use.

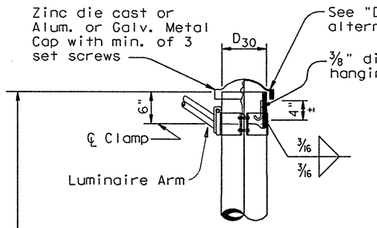

DETAIL A
(for pole with luminaire)

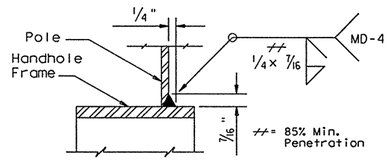

DETAIL E

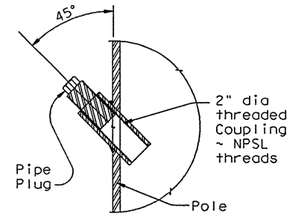

COUPLING DETAIL

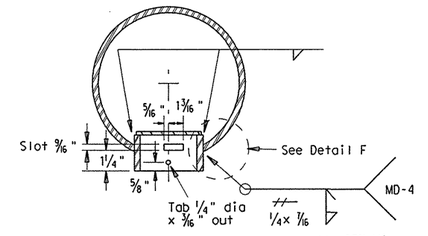

SECTION C-C
Opening for access compartment shall be no more than 1/16 inch wider than the access compartment itself.

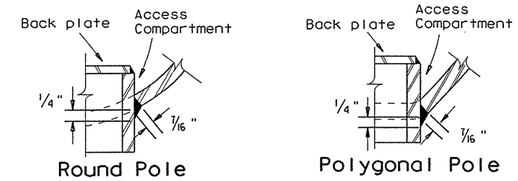

DETAIL F

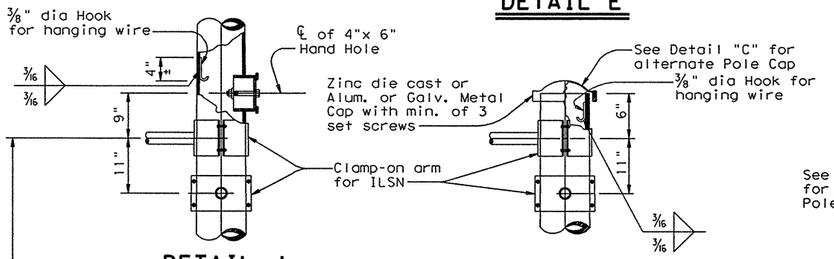

DETAIL J
(If ILSN applied)

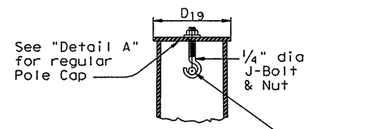

SECTION E-E

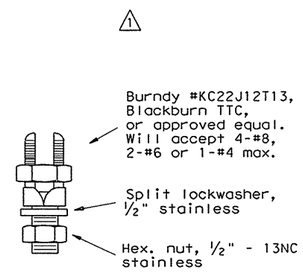

COPPER GROUND CONNECTOR

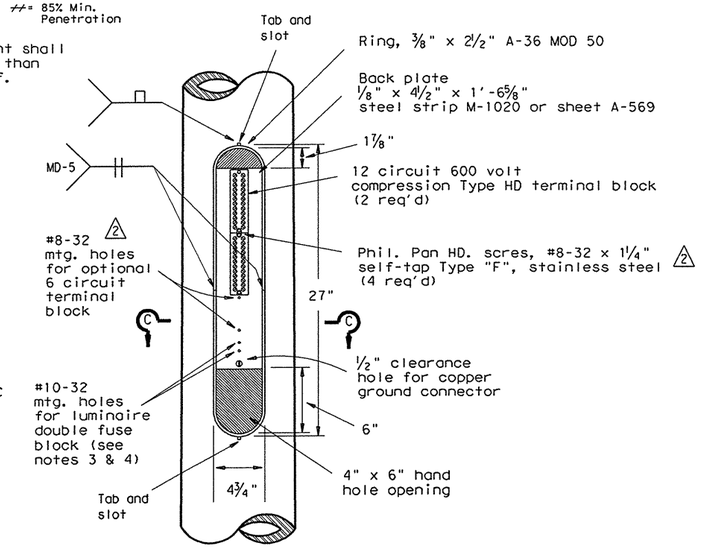

ACCESS COMPARTMENT

1. The cover shall be one piece formed from ABS plastic, shall be a pearl gray color, and shall be suitable for exposure to harsh sunlight and extreme weather. Cover shall latch with two screw latches and shall fit tightly to the enclosure ring to create a rainproof seal. Latch screws shall be 1/4-20 stainless flat socket head screws with tamper proof feature.
2. The pole manufacturer shall provide with each pole a separate kit consisting of: one cover with two latching assemblies, two terminal strips (Marathon #985GP12CU or approved equal), four #8-32 x 1 1/4" self tapping type "F" stainless steel pan head screws, and one ground connector (Blackburn TTC, Burndy KC22J12T13, or Ilsco SSS-5). The traffic signal contractor shall install the kit items in the field. (2)
3. The screw hole spacing on the enclosure back plate shall be for two Marathon #985GP12 terminal strips, one Marathon #985GP06CU terminal strip, and one Bussmann #BM6032B fuse block. (1)
4. Install one Bussmann #BM6032B, Littelfuse #L60030M-2C, or Ferraz-Shawmut #30352 fuse block for poles where luminaires are to be installed.

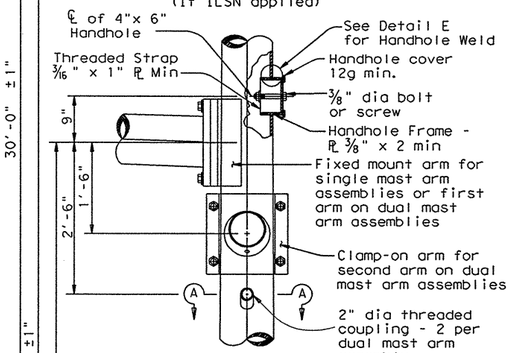

DETAIL B
(for 30' pole with luminaire and ILSN sign)

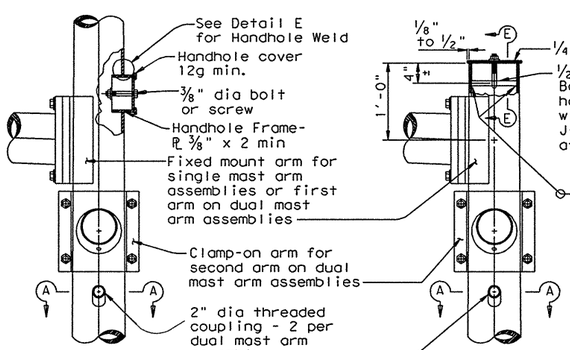

DETAIL K
(for 24' pole with ILSN sign and no luminaire)

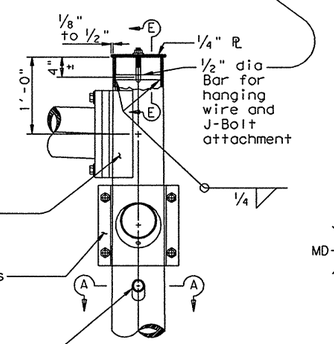

DETAIL C
(for 19' pole with no ILSN sign and no luminaire)

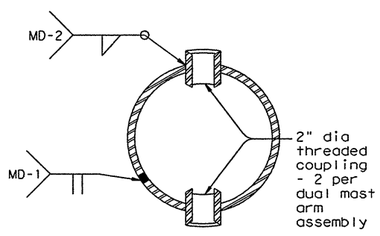

SECTION A-A

Anchor Bolt Diameter	Bolt Hole Diameter	Slot Length	Bolt Circle Diameter	Base PL Dim. L x T	Adjust. Range
1 1/2"	1 3/4"	3 1/2"	17"	18" x 1 1/2"	13.4°
1 3/4"	2"	4"	19"	20" x 1 3/4"	13.5°
2"	2 1/4"	4 1/2"	21"	22" x 2"	13.6°
2 1/4"	2 1/2"	5"	23"	24" x 2 1/4"	13.7°

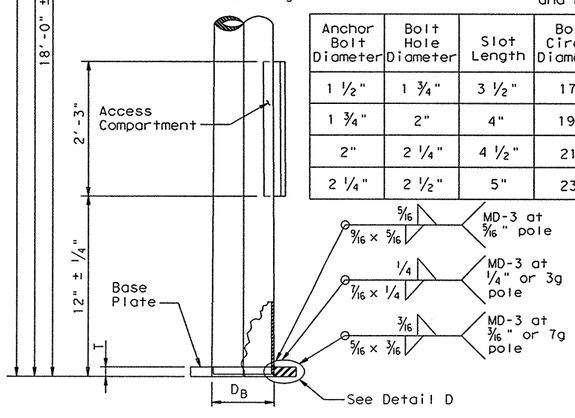

POLE ELEVATION

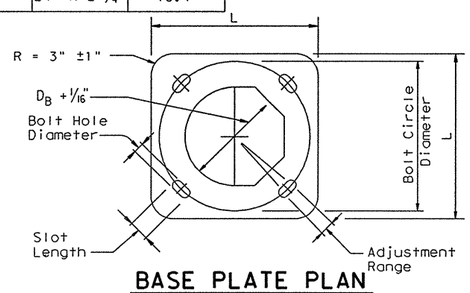

BASE PLATE PLAN

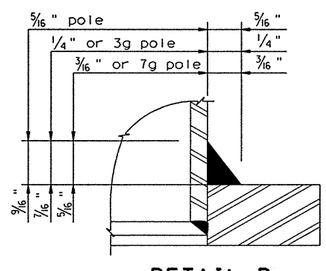

DETAIL D

1 10/03 Revision
Revised notes, and remove detail.

2 2/07 Revision
Revised dimension of terminal-block screw.

STANDARD PLANS
Texas Department of Transportation
Traffic Operations Division

TRAFFIC SIGNAL SUPPORT STRUCTURES MAST ARM POLE DETAILS

MA-D-07

© TxDOT August 1995	DN: - MS	CK: - JSY	DW: - FDN	CK: - CAL
REVISIONS 8-99 10-00 10-03 2-07	STATE DISTRICT: AUSTIN	FEDERAL REGION: 6	FEDERAL AID PROJECT	SHEET 567
	COUNTY: WILLIAMSON		CONTROL-SECT-JOB: 0683-06-027	HIGHWAY: SH 45 LOOP 1

DISPLAYED
1 2 3 4 5 6 7 8 9 10 11 12 13 14 15 16 17 18 19 20 21 22 23 24 25 26 27 28 29 30 31 32 33 34 35 36 37 38 39 40 41 42 43 44 45 46 47 48 49 50 51 52 53 54 55 56 57 58 59 60 61 62 63
ACC:

FOUNDATION DESIGN TABLE

FDN TYPE	DRILLED SHAFT DIA	REINFORCING STEEL: VERT BARS	REINFORCING STEEL: SPIRAL & PITCH	DRILLED SHAFT LENGTH-ft ④, ⑤, ⑥ — TEXAS CONE PENETROMETER N blows/ft: 10	15	40	ANCHOR BOLT DESIGN ①: ANCHOR BOLT DIA	Fy (ksi)	BOLT CIR DIA	ANCHOR TYPE	FOUNDATION DESIGN LOAD ②: MOMENT K-ft	SHEAR Kips	TYPICAL APPLICATION
24-A	24"	4- #5	#2 at 12"	5.7	5.3	4.5	¾"	36	12 ¾"	1	10	1	Pedestal pole, pedestal mounted controller.
30-A	30"	8- #9	#3 at 6"	11.3	10.3	8.0	1 ½"	55	17"	2	87	3	Mast arm assembly. (see Selection Table)
36-A	36"	10- #9	#3 at 6"	13.2	12.0	9.4	1 ¾"	55	19"	2	131	5	Mast arm assembly. (see Selection Table) 30' strain pole with or without luminaire.
36-B	36"	12- #9	#3 at 6"	15.2	13.6	10.4	2"	55	21"	2	190	7	Mast arm assembly. (see Selection Table) Strain pole taller than 30' & strain pole with mast arm
42-A	42"	14- #9	#3 at 6"	17.4	15.6	11.9	2 ¼"	55	23"	2	271	9	Mast arm assembly. (see Selection Table)

FOUNDATION SELECTION TABLE FOR STANDARD MAST ARM PLUS ILSN SUPPORT ASSEMBLIES (ft)

		FDN 30-A	FDN 36-A	FDN 36-B	FDN 42-A
80 MPH DESIGN WIND SPEED	MAX SINGLE ARM LENGTH	32' ⚠1	48'		
	MAXIMUM DOUBLE ARM LENGTH COMBINATIONS	24' X 24'			
		28' X 28'			
		32' X 28'	32' X 32'		
			36' X 36'		
			40' X 36'		
			44' X 28'	44' X 36'	
100 MPH DESIGN WIND SPEED	MAX SINGLE ARM LENGTH	⚠1	36'	44'	
	MAXIMUM DOUBLE ARM LENGTH COMBINATIONS		24' X 24'		
			28' X 28'		
			32' X 24'	32' X 32'	
				36' X 36'	
				40' x24'	40' X 36'
					44' x 36'

EXAMPLE:
1. For 80mph design wind speed, foundation 30-A can support up to a 32' arm with another arm up to 28'
2. For 100mph design wind speed, foundation 36-A can support a single 36' mast arm.

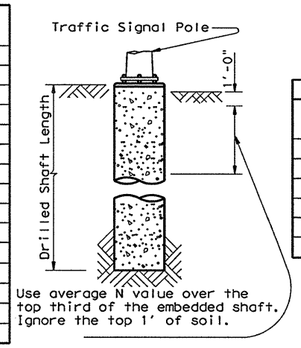

Use average N value over the top third of the embedded shaft. Ignore the top 1' of soil.

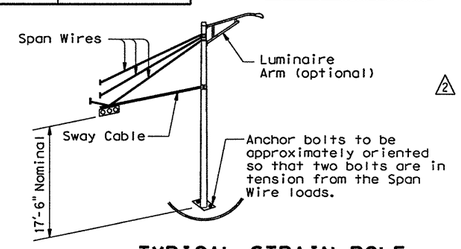

TYPICAL STRAIN POLE ASSEMBLY

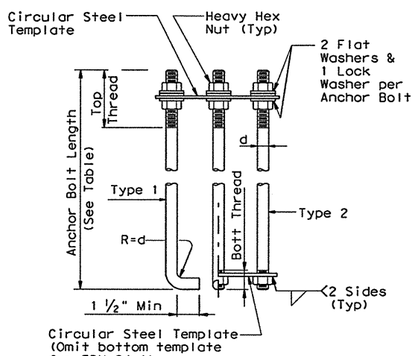

HOOKED ANCHOR (TYPE 1) — NUT ANCHOR (TYPE 2)

ANCHOR BOLT ASSEMBLY

INSTALLATION PROCEDURE:
Threads of anchor bolts shall be coated with pipe joint compound prior to installation of upper nuts when erecting pole. After pole is plumbed and in permanent alignment, the exposed threads of painted bolts shall be cleaned and an additional coating of zinc-rich paint applied to seal the bolt thread-nut joint.

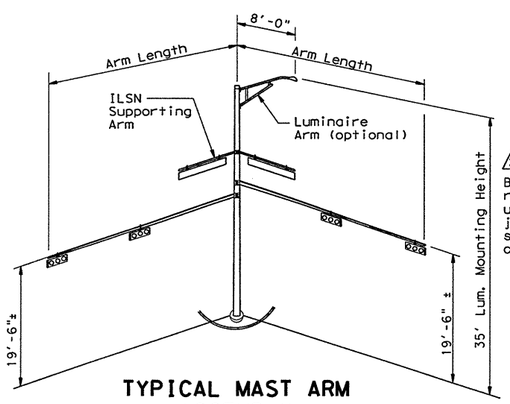

TYPICAL MAST ARM ASSEMBLY

NOTES:

① Anchor bolt design develops the foundation capacity given under Foundation Design Loads.

② Foundation Design Loads are the allowable moments and shears at the base of the structure.

③ Foundations may be listed seperately or grouped according to similarity of location and type. Quantities are for the Contractor's information only.

④ Field Penetrometer readings at a depth of approximately 3 to 5 feet may be used to adjust shaft lengths.

⑤ If rock is encountered, the Drilled Shaft shall extend a minimum of two diameters into solid rock.

⑥ Decimal lengths in Design Table are to allow interpolation for other penetrometer values. Round to nearest foot for entry into Summary Table.

ANCHOR BOLT & TEMPLATE SIZES

BOLT DIA IN.	⑦ BOLT LENGTH	TOP THREAD	BOTT THREAD	BOLT CIRCLE	R2	R1
¾"	1'-6"	3"	—	12 ¾"	7 ⅛"	5 ⅝"
1 ½"	3'-4"	6"	2"	17"	10"	7"
1 ¾"	3'-10"	7"	2 ¼"	19"	11 ¼"	7 ¾"
2"	4'-3"	8"	2 ½"	21"	12 ½"	8 ½"
2 ¼"	4'-9"	9"	3"	23"	13 ¾"	9 ¼"

⑦ Min dimensions given, longer bolts are acceptable.

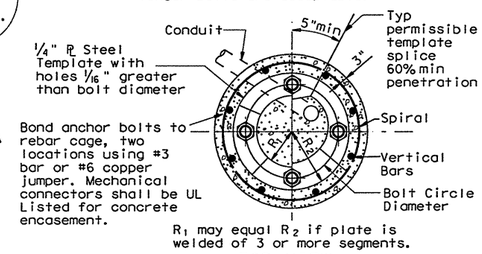

TOP VIEW

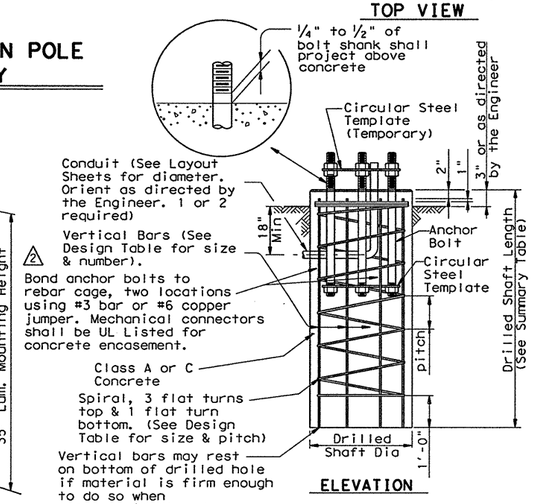

ELEVATION

FOUNDATION DETAILS

FOUNDATION SUMMARY TABLE ③

LOCATION IDENTIFICATION	AVG. N BLOW /ft.	FDN TYPE	NO. EA	DRILLED SHAFT LENGTH ⑥ (FEET): 24-A	30-A	36-A	36-B	42-A
O'CONNOR DR								
P1	10	36-A				13		
P2	10	36-A				23		
P3	10	36-A				21		
P4	10	36-A				22		
P5	10	36-A				22		
MCNEIL RD								
P1	10	24-A		6				
P2	10	24-A		6				
TOTAL DRILLED SHAFT LENGTHS				12		101		

GENERAL NOTES:

Design conforms to 1994 AASHTO Standard Specifications for Structural Supports for Highway Signs, Luminaires and Traffic Signals and interim revisions thereto.

Reinforcing steel shall conform to Item 440.

Concrete shall be Class A or C.

Threads for anchor bolts and nuts shall be rolled or cut threads of unified national coarse thread series except for A193B7 bolts which shall have 8 pitch thread series. Bolts and nuts shall have Class 2A and 2B fit tolerances. Galvanized nuts shall be tapped after galvanizing.

Anchor bolts that are 1" in diameter or less shall conform to ASTM A36. Anchor bolts larger than 1" in diameter shall conform to A36M55 in accordance with the Item, "Anchor Bolts" or ASTM A193B7 or A687. Galvanize or coat with zinc-rich paint a minimum of the upper 14 inches of all anchor bolts unless otherwise noted. Exposed nuts shall be galvanized or coated with zinc-rich paint. Washers shall be galvanized. Templates and embeded nuts need not be galvanized.

STATE OF TEXAS — RENE U. GARZA — 65409 — REGISTERED PROFESSIONAL ENGINEER

Rene U. Garza PE 4/11/11

11/99 Revision

⚠1 Changed to Facilitate new terminal strip enclosure

⚠2 Changed from ground rod to UFER ground

STANDARD PLANS
Texas Department of Transportation
Traffic Operations Division

TRAFFIC SIGNAL POLE FOUNDATION

TS-FD-99

© TxDOT August 1995 | DN: MS | CK: JSY | DW: MAO/MMF | CK: JSY/TEB

REVISIONS	STATE DISTRICT	FEDERAL REGION	FEDERAL AID PROJECT	SHEET
5-96	AUSTIN	6		568
11-99	COUNTY		CONTROL-SECT-JOB	HIGHWAY
	WILLIAMSON		0683-06-027	IH 35 LOOP 1

DISCLAIMER
The use of this standard is governed by the "Texas Engineering Practice Act". No warranty of any kind is made by TxDOT for any purpose whatsoever. TxDOT assumes no responsibility for the conversion of this standard to other formats or for incorrect results or damages resulting from its use.

DN: CK: DW: CK:
DATE: ACC: FILE:
REVISIONS

MATERIALS	
Pole or Arm Simplex	ASTM A27 GR 65-35 or A148 GR 80-50 or A576 GR 1021 (4) or A36 (Arm only)
Arm Pipes	ASTM A53 GR A or B or A500 GR B or A501 or A595 (2) or A715 GR 50
Arm Plates (3)	ASTM A36 or A572 GR50 (1) or A595 GR A or A588
Misc.	ASTM designations as noted

(1) ASTM A36M50 steel as described in Item 442 "Metal for Structures" may be used in lieu of A 572 GR 50.

(2) If A595 GR A material is used, arm need not be cold worked to A595 requirements, but material must have 40 ksi minimum yield prior to fabrication.

(3) Either of the materials listed for pates may be used where the drawings do not specify a particular ASTM designation.

(4) A576 must be suitable for forging and also meet minimum tensile strength of 65 ksi, minimum yield of 35 ksi, and elongation in 2 inches of 22 percent.

(5) Dimensional limits are given to show acceptable variation in design. All of a Fabricator's production of a particular arm length shall have the same dimensions within specified tolerances.

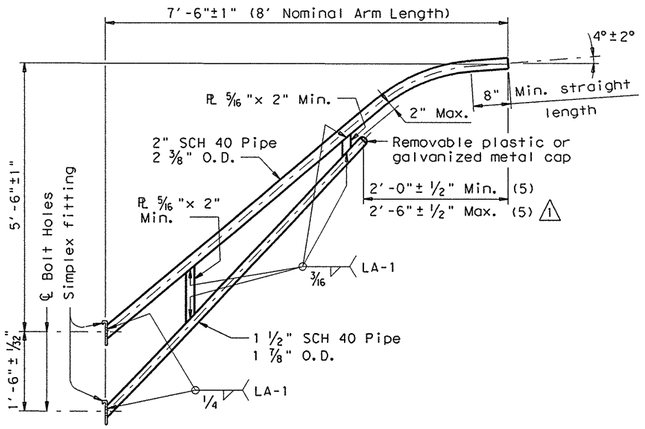

8-FOOT LUMINAIRE ARM

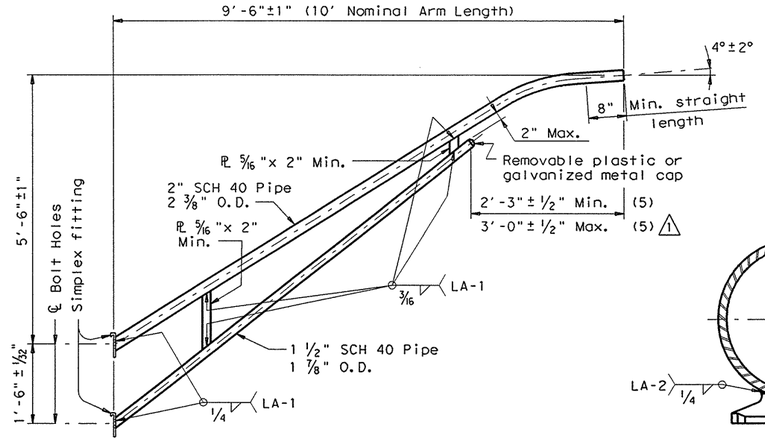

10-FOOT LUMINAIRE ARM

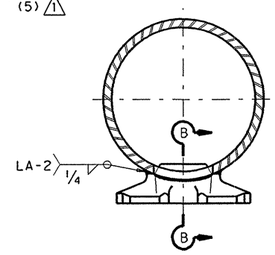

DIRECT ATTACHMENT DETAIL

GENERAL NOTES:

Design conforms to 1994 AASHTO Standard Specifications for Structural Supports for Highway Signs, Luminaires, and Traffic Signals and Interim Revisions thereto. Design Wind Speed equals 90 mph plus a 1.3 gust factor. Arms are designed to support a 75 lb. luminaire having an effective projected area (actual area times drag coefficient) of 1.5 sq. ft.

Materials and fabrication shall be in accordance with the Specificatons and with the details, dimensions, and weld procedures shown herein. Weld references call for preapproved weld procedures which the Fabricator must obtain prior to fabrication. In the absense of specified Fabricaton tolerances, dimensions shall be within the tolerances generally obtainable in normal fabrication practice.

Unless otherwise noted, all parts shall be galvanized after fabrication in accordance with the Specifications.

Special designs require submission of shop drawings in accordance with the item "Steel Structures".

Each pole simplex fitting shall be supplied with 2 A325 bolts and 2 lock washers of the size specified. The bolts and lock washers shall be secured to the pole with the other hardware items called for in the plans. When clamp attachment is specified, the Fabricator shall ship the clamp assembly securely attached to the pole at the location shown on the plans.

If clamp assemblies are ordered without poles, the Fabricator shall ship one upper and one lower clamp assembly together in a single package, including all nuts and washers required for the clamps and simplex fittings.

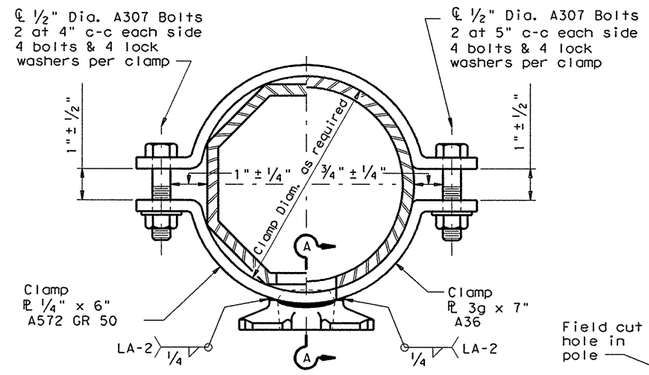

CLAMP ATTACHMENT DETAIL NO. 1 (HALF SECTION)

CLAMP ATTACHMENT DETAIL NO. 2 (HALF SECTION)

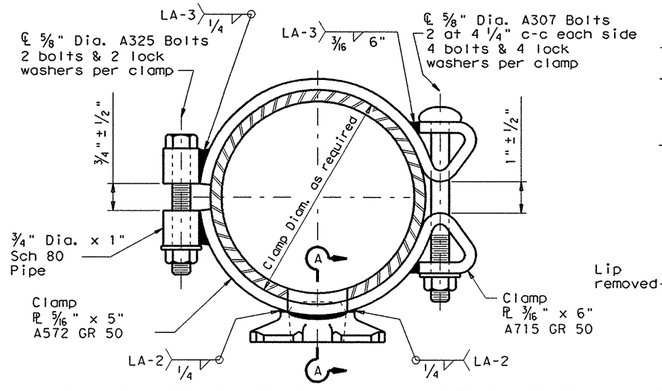

CLAMP ATTACHMENT DETAIL NO. 3 (HALF SECTION)

CLAMP ATTACHMENT DETAIL NO. 4 (HALF SECTION)

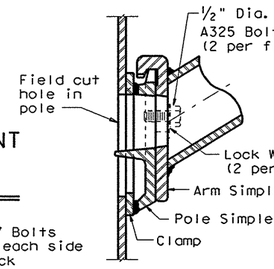

UPPER SIMPLEX FITTING

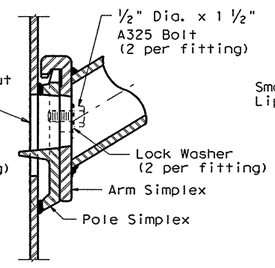

UPPER SIMPLEX FITTING

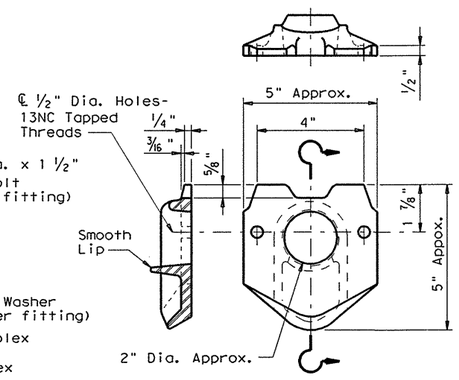

POLE SIMPLEX DETAIL

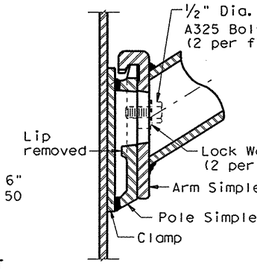

LOWER SIMPLEX FITTING

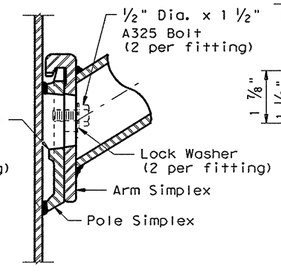

LOWER SIMPLEX FITTING

SECTON A-A

SECTON B-B

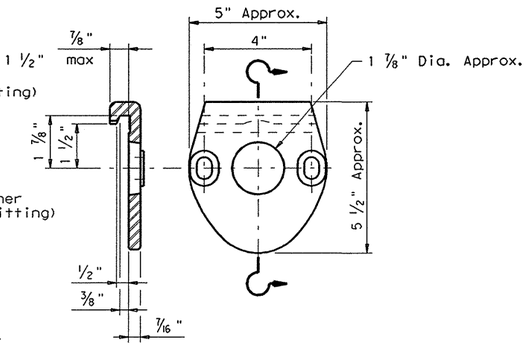

ARM SIMPLEX DETAIL

1 1-99 - minor typo correction

DISCLAIMER:
The use of this standard is governed by the "Texas Engineering Practice Act". No warranty of any kind is made by TxDOT for any purpose whatsoever. TxDOT assumes no responsibility for the conversion of this standard to other formats or for incorrect results or damages resulting from its use.

LEVELS 1-6	FD	ACC:
1 2 3 4 5 6 7 8 9 10 11 12 13 14 15 16		
17 18 19 20 21 22 23 24 25 26 27 28 29 30 31 32		
33 34 35 36 37 38 39 40 41 42 43 44 45 46 47 48		
49 50 51 52 53 54 55 56 57 58 59 60 61 62 63		(LV=1,2 for English; 1,3 for Metric)

Texas Department of Transportation
Traffic Operations Division

STANDARD ASSEMBLY DRAWINGS FOR LUMINAIRE SUPPORT STRUCTURES

ARM DETAILS

LUM-A-99

FILE: lum-a.dgn	DN: LEH	CK: JSY	DW: LTT	CK: TEB	STD:
© TxDOT August 1995	DISTRICT	FEDERAL AID PROJECT			SHEET
REVISIONS 5-96 1-99	AUSTIN				569
	COUNTY		CONTROL-SECT-JOB		HIGHWAY
	WILLIAMSON		0683-06-027		IH 35 LOOP 1

DISCLAIMER
The use of this standard is governed by the "Texas Engineering Practice Act". No warranty of any kind is made by TxDOT for any purpose whatsoever. TxDOT assumes no responsibility for the conversion of this standard to other formats or for incorrect results or damages resulting from its use.

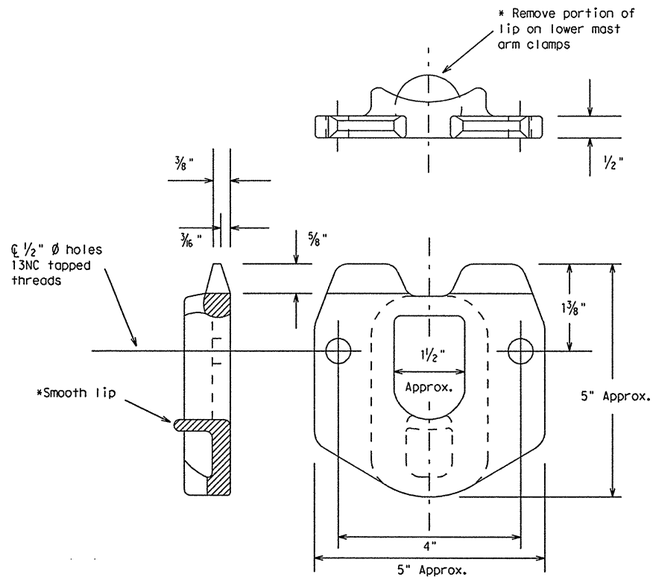

POLE SIMPLEX DETAILS

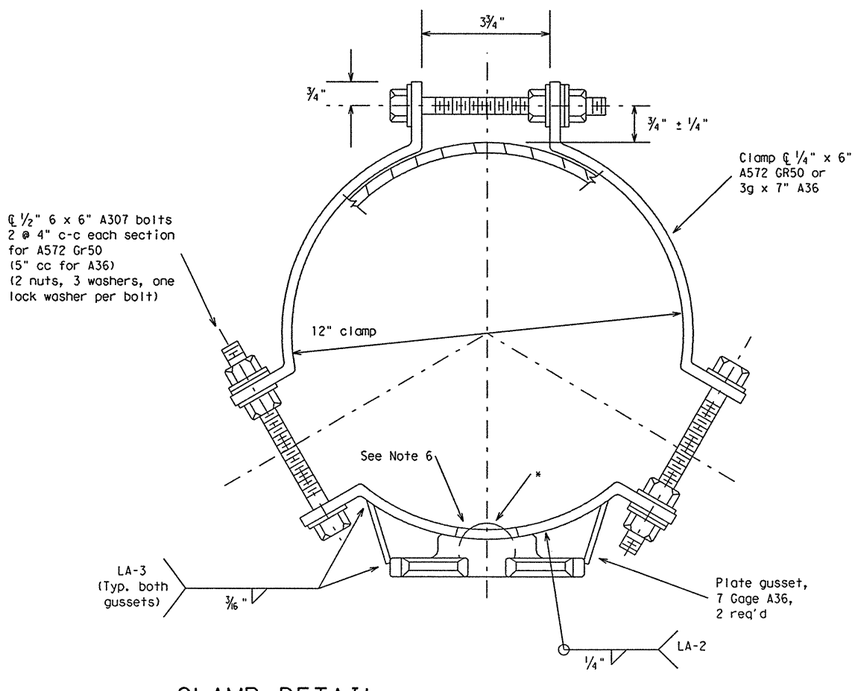

CLAMP DETAIL

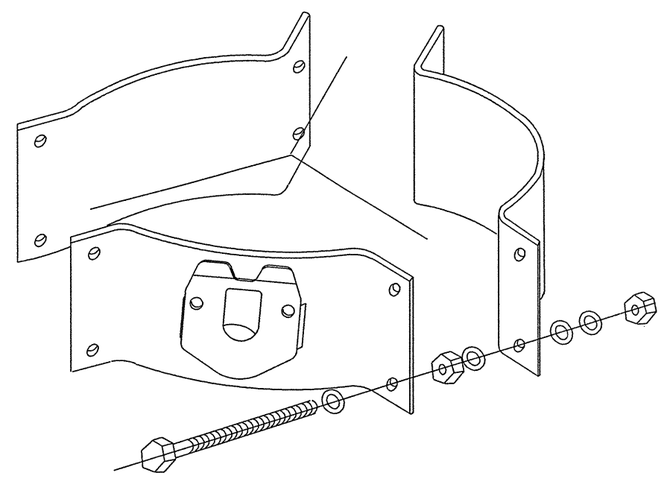

PROJECTION

OTHER MATERIALS:

1. Pole simplex shall be ASTM A27 GR65-35 or A148 GR80-50 or A576 GR1021. ASTM A576 must be suitable for forging and also meet minimum tensile of 65ksi, minimum yield of 35ksi, and elongation in 2 inches of 22 percent.
2. A36M50 steel may be used in lieu of ASTM A572 GR50.
3. Welded tabs and backplates shall be ASTM A-36 steel or better.
4. Nylon insert locknuts shall conform to ASTM A563.

GENERAL NOTES:

1. Materials and fabrication shall be in accordance with the Specifications and with the details, dimensions, and weld procedures shown herein. Weld references call for preapproved weld procedures which the Fabricator must obtain prior to fabrication. In the absense of specified fabrication tolerances, dimensions shall be within the tolerances generally obtainable in normal fabrication practice.
2. All parts shall be galvanized after fabrication in accordance with ASTM 153 or 123. The throat of the Simplex shall be made free of all rough or sharp edges resulting from the galvanizing process.
3. Each simplex fitting shall be supplied with 2 ASTM A325 bolts, 1/2in. X 1 1/2in. and 2 lock washers. The bolts and lock washers shall be secured to the clamp with the other hardware items. The Fabricator shall ship clamp assembly together in a single package, including all bolts, nuts, and washers required for the clamp and simplex fitting.
4. Design conforms to 1985 AASHTO "Standard Specifications for Structural Supports for Highway Signs, Luminaires, and Traffic Signals" and interim revisions thereto. Design Wind Speed equals 80 mph plus a 1.3 gust factor. Clamps are designed to support a 75 lb. luminaire having an effective projected area (actual area times drag coefficient) of 1.4 sq.ft.,12 ft. maximum arm length.
5. Each assembly shall consist of one upper piece simplex fitting having a smooth lip and one lower piece simplex fitting with the lip removed.
6. Approximately 2 in. diameter hole in upper mast arm clamp.

For 8.9 - 12 inch diameter Signal Poles
(Two req'd for each mast arm)

STANDARD PLANS
Texas Department of Transportation
Traffic Operations Division

CLAMP ON FITTING ASSEMBLY FOR LUMINAIRE MAST ARM

CFA-99

©TxDOT		DN: KAB	CK: RES	DW: FDN	CK: CAL
REVISIONS 11-99	STATE DISTRICT: AUSTIN	FEDERAL REGION: 6	FEDERAL AID PROJECT		SHEET: 570
	COUNTY: WILLIAMSON		COUNTY-SECT-JOB: 0683-06-027		HIGHWAY: SH 45 LOOP 1

D-18-6100.001
November 99

DISCLAIMER
The use of this standard is governed by the "Texas Engineering Practice Act". No warranty of any kind is made by TxDOT for any purpose whatsoever. TxDOT assumes no responsibility for the conversion of this standard to other formats or for incorrect results or damages resulting from its use.

TOP VIEW
(Slab & Base)

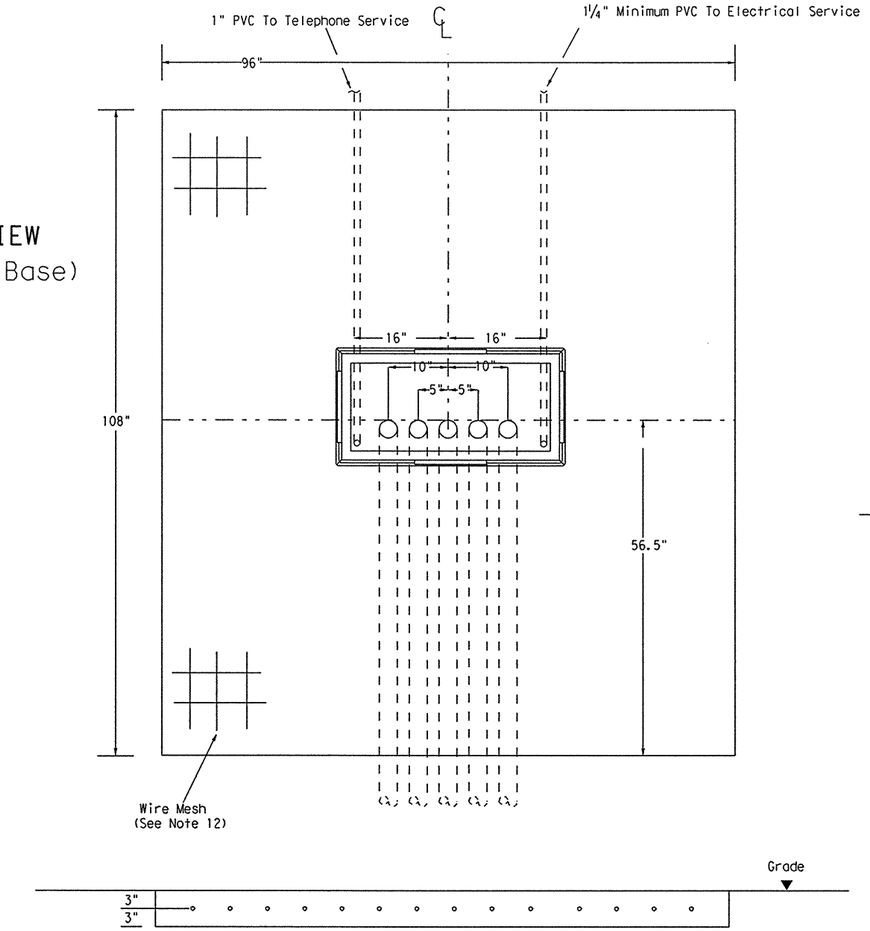

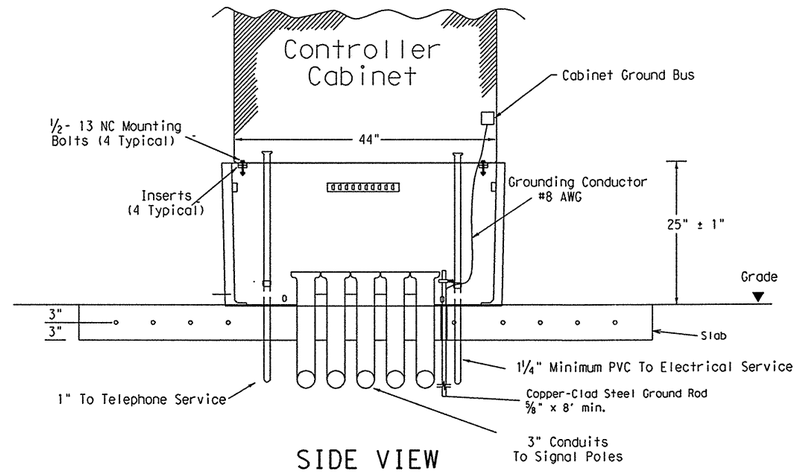

SIDE VIEW
(Slab & Base)

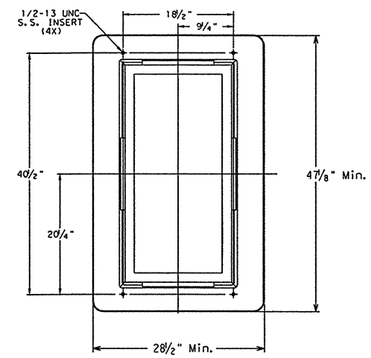

CABINET BASE

TRAFFIC SIGNAL CONTROLLER BASE:

1. Provide a traffic signal controller base (cabinet base) manufactured of polymer concrete material consisting of calcareous and siliceous stone; glass fibers and thermoset polyester resin. The polymer concrete cabinet base must be reinforced on the inside of the cabinet base with fiberglass matting. Provide one of the following bases: Armorcast Part # A6001848X24, Quazite Model # PG3048Z709, or other as approved by TxDOT Traffic Operation Division.
2. The polymer concrete material must have a minimum compressive strength of 10,300 pounds per square inch (psi), minimum flexural strength of 3600 psi, and minimum shear strength of 3600 psi.
3. The polymer concrete cabinet base must conform to the dimensions shown and must accommodate a standard TxDOT basemount cabinet.
4. Supply the cabinet base with four ½"-13 UNC stainless steel inserts for attachment of the cabinet to the base. Inserts must withstand a minimum torque of 50 ft-lb and a minimum straight pull out strength of 750 lbs.
5. Provide the cabinet base with 4 cable racks mounted one on each side of the base 2" to 7 " from the top edge of the base. Unless approved otherwise, cable racks must be 1-1/2 x ⅜ x ⅜ inch steel channel with eight T-slots spaced at 1-1/2 inches. The cable racks must easily accommodate the insertion of tie wraps to attach field wiring to the racks to serve as strain relief. Secure cable racks to the base using ½"-13 UNC stainless steel screws and inserts.
6. The cabinet base, when secured to the concrete slab with controller cabinet attached, must withstand a minimum wind load of 125 mph or a 850 lb force applied at 49" above the bottom of the base without causing the base or cabinet to come out of their anchored position or cause any permanent deformation. The manufacturer must supply certification by an independent testing laboratory or sealed by a Texas Licensed Professional Engineer. Provide the cabinet base with hardware for attachment to a concrete slab.
7. The traffic signal base must be permanently marked either by impress or by permanent ink with the manufacturer's model number and name or logo.
8. Seal the base to the concrete with a silicone caulk bead and fastened to the slab per manufacturer's instructions.

CONCRETE SLAB:

9. Traffic signal controller pad must be a portland cement concrete slab poured in place, must conform to the dimensions shown, and must be level.
10. Bond a #8 AWG copper ground wire and an 8 ft ground rod bonded to the reinforcing mesh by a suitable UL Listed clamp and terminated to the cabinet grounding bus for the purpose of providing a local ground for the electrical grounding conductor. The electrical grounding conductor specified in Item 680-3.A.4 is required and must be terminated to the cabinet ground bus.
11. Install a PVC sleeve to prevent the ground rod from direct embedment in the slab.
12. Provide welded wire mesh 6X6-W2.9 X W2.9 for reinforcement. Provide joints and splices in the mesh with a minimum 6-inch overlap. Center the mesh between top and bottom and provide a minimum 3 inch cover on the edges.
13. Provide Class B concrete minimum for the slab in accordance with Item 421. Construct the slab in accordance with Item 531.

CONDUITS:

14. Stub up and run 3-inch conduits through the slab to the various traffic signal poles and ground boxes as shown on the layouts. Install the number of conduits as shown on layouts plus two additional 3 inch conduits for future use. Terminate the conduits with a bushing between 2 and 4-inches above the slab.
15. Extend conduits for future use at least 18-inches from the edge of the slab, terminate underground with a coupling, and cap and seal so that the seal can be removed without damaging the coupling. This must also apply to unused telephone conduit.
16. Stub up two separate conduits through the slab from the electrical and telephone services. Run the conduit for the electrical feed directly to the electrical service enclosure. Run the conduit for the telephone line directly to the telephone service, usually located on the same pole as the electrical service. Telephone must not under any circumstance share a conduit with any other function.
17. Terminate electric and telephone conduits above the slab with a coupling. After the base is installed, extend the conduits above the top of the base and secure to the base using a steel one-hole strap or similar suitable substitute.

CONTROLLER CABINET:

18. Anchor the controller cabinet to the base using four stainless steel 1/2-13 NC bolts.
19. The silicone caulk bead specified in Item 680.3.B must be RTV 133.

PAYMENT:

20. Bid TS-CF as subsidiary to Item 680.

STANDARD PLANS
Texas Department of Transportation
Traffic Operations Division

TRAFFIC SIGNAL CONTROLLER CABINET BASE AND PAD

TS-CF-04

©TxDOT October 2000	DGN: HW	CKD:	DWN: CJ	CKD: CAL	
REVISIONS 12-04	STATE DISTRICT	FEDERAL REGION	FEDERAL AID PROJECT		SHEET
	AUSTIN	6			571
	COUNTY		CONTROL-SECT-JOB		HIGHWAY
	WILLIAMSON		0683-06-027		SH. 45 LOOP 1

DISPLAYED ACC:

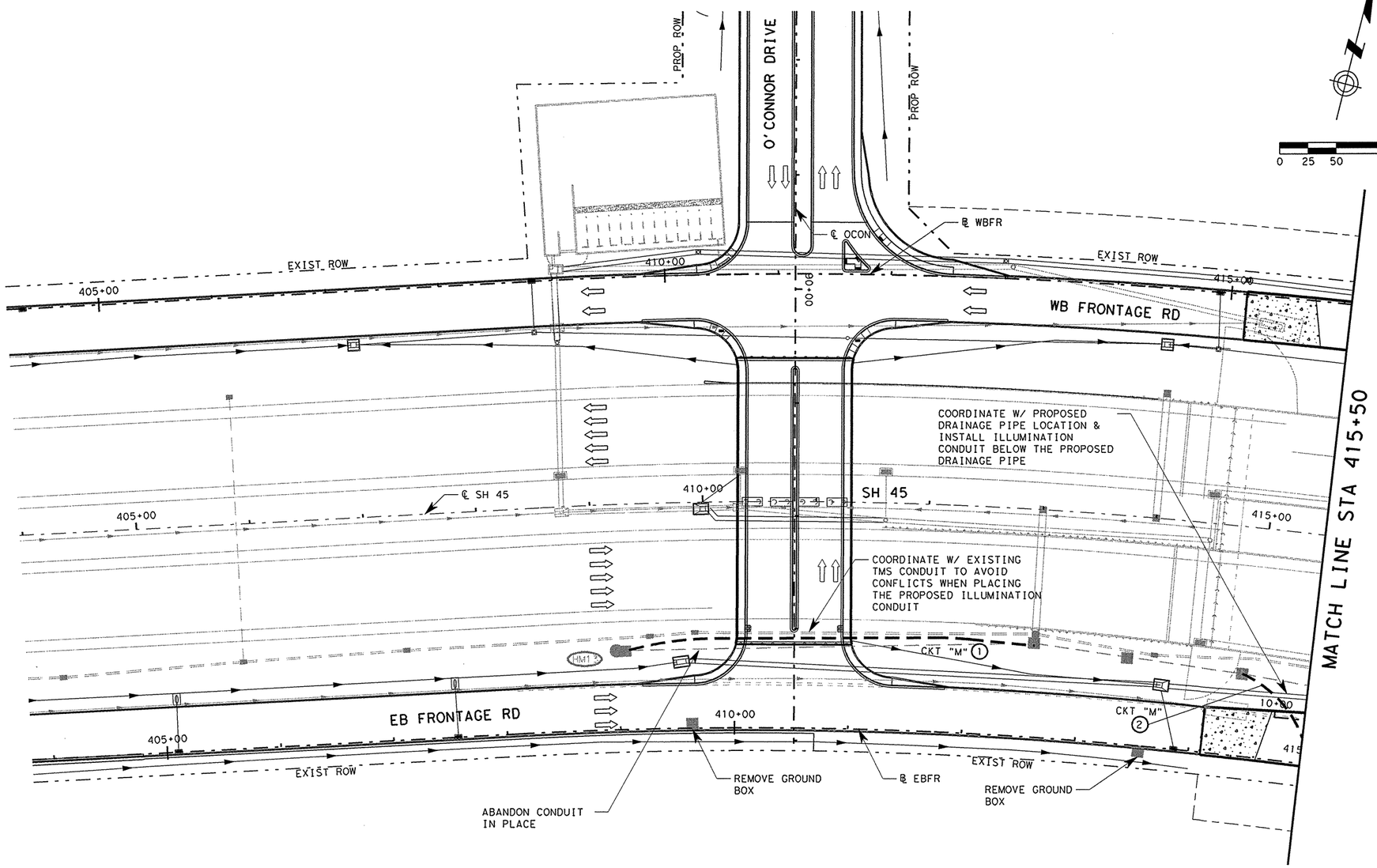

NOTES:

1. CONDUCTORS IN PROPOSED CONDUIT RUNS SHALL BE SPLICED TO EXISTING CONDUCTORS IN EXISTING GROUND BOXES. SPLICES ARE SUBSIDIARY TO INSTALLATION OF NEW CONDUCTORS.
2. UTILITIES SHOWN ARE PROVIDED FOR INFORMATIONAL PURPOSES ONLY AND SHOULD BE FIELD VERIFIED PRIOR TO CONSTRUCTION.

LEGEND

- EXISTING HIGH MAST LIGHTING POLE (ASYM) (150')
- RELOCATED HIGH MAST LIGHTING POLE (ASYM) (150')
- EXISTING CONDUIT
- (X) CONDUCTOR IN CONDUIT, PVC SCHD 40 CONDUIT (TRENCH), RUN NUMBER (X) (SEE CONDUIT RUN TABLE)
- EXISTING ELECTRICAL SERVICE POLE
- EXISTING GROUND BOX
- PROPOSED GROUND BOX
- HIGH MAST ASYM LIGHT PATTERN DIRECTION
- (YYY) LIGHTING FIXTURE(S)
- TRAFFIC DIRECTION/TRAVEL LANE
- PROPOSED DITCH ℄

ITEM	DESC	DESCRIPTION	UNIT	EST QTY	FINAL QTY
104	2009	REMOVING CONC (RIPRAP)	SY		
416	2026	DRILL SHAFT (HIGH MAST POLE) (60 IN)	LF		
432	2050	RIPRAP STR (CONC)	CY		
496	2018	REMOVE STR (CONC)	EA		
618	2018	CONDT (PVC) (SCHD 40) (2")	LF	440	
620	2007	ELEC CONDR (NO. 4) BARE	LF	450	
620	2008	ELEC CONDR (NO. 4) INSULATED	LF	900	
620	2011	ELEC CONDR (NO. 8) BARE	LF		
620	2012	ELEC CONDR (NO. 8) INSULATED	LF		
624	2008	GROUND BOX TY A (122311) W/APRON	EA		
690	2006	REMOVAL OF GROUND BOXES	EA	2	
6122	2003	RELOCATE HIGH MAST LIGHTING (150 FT)	EA		

PROPOSED CONDUIT & CONDUCTOR RUNS

RUN	RUN LENGTH	GROUND		POWER		CONDUIT	CIRCUIT (CKT)
		8 BARE	4 BARE	8 INSUL	4 INSUL	SCH 40 PVC	
	FT	FT	FT	FT	FT	FT	
1	360		365		2-365	360	"M"
2	80		85		2-85	80	"M"
TOTAL			450		900	440	

STATE OF TEXAS
RENE U. GARZA
65409
REGISTERED PROFESSIONAL ENGINEER

Rene U Garza PE
6/3/11

REV. No.	DATE	REVISION	BY
△			
△			
△			

PBSJ
an Atkins company
TBPE REG. # F-474

Texas Department of Transportation
Austin District
©2011 by TxDOT

SH 45 / O'CONNOR DRIVE ILLUMINATION LAYOUT STA 404+00 TO 415+50

SCALE: 1"=100'
SHEET 1 OF 5

DESIGNED: RVP	FED. RD DIV. No.	STATE	PROJECT No.		HIGHWAY No.
CHECKED: SED	6	TEXAS			LP 1/SH 45

DRAWN: RVP	STATE DISTRICT	COUNTY	CONTROL No.	SECTION No.	JOB No.	SHEET No.
CHECKED: RUG	AUSTIN	WILLIAMSON	0683	06	027	572

DATE: 6/2/2011 TIME: 3:51:45 PM

PLOT DRIVER: RD*11x17*PDF.plt
PEN TABLE: plotordr*ocon.tbl
FILE: r:\trans-design\o'connor\cadd\ILL\OC45ILL01.dgn

DATE: 6/2/2011 TIME: 3:51:47 PM

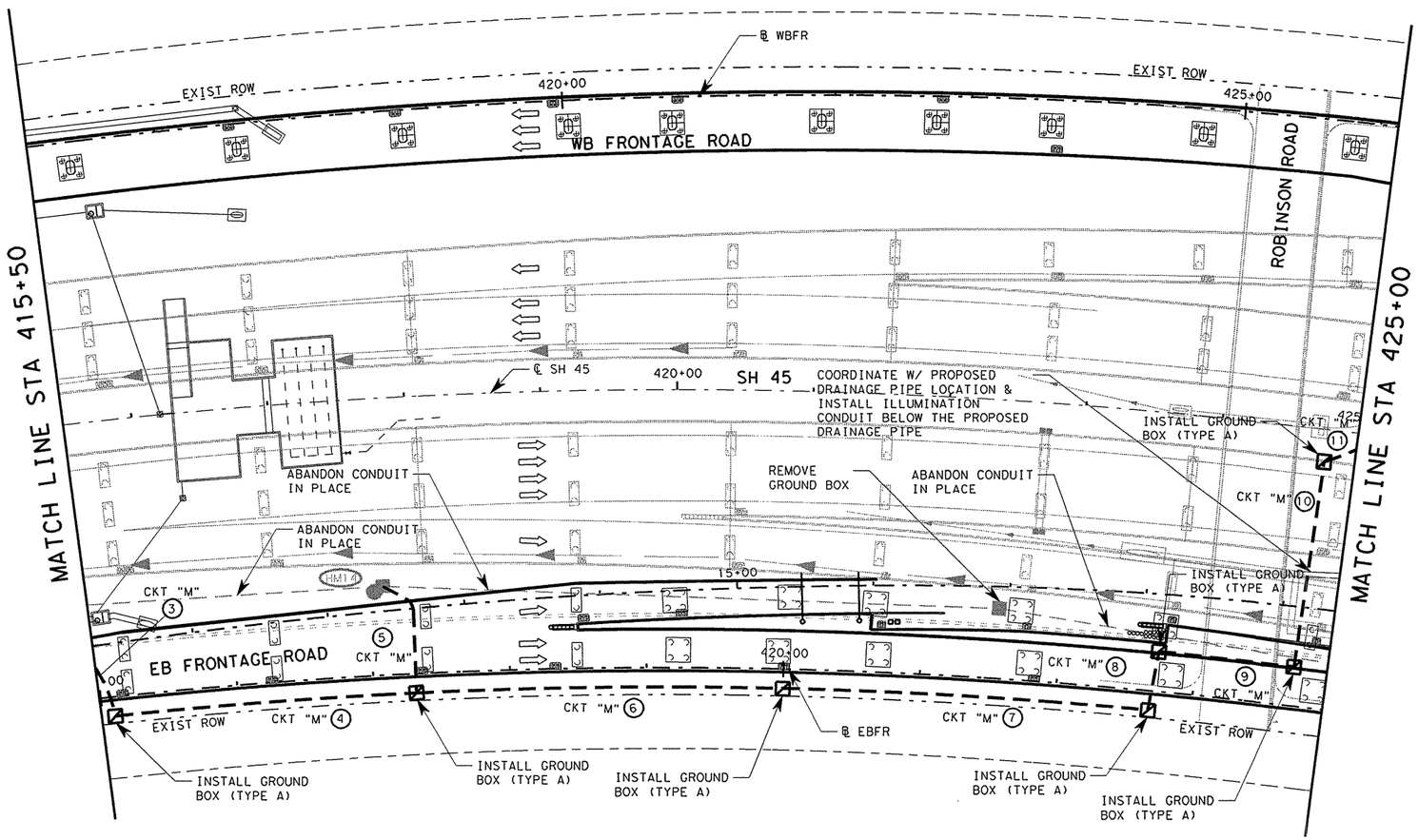

NOTES:

1. CONDUCTORS IN PROPOSED CONDUIT RUNS SHALL BE SPLICED TO EXISTING CONDUCTORS IN EXISTING GROUND BOXES. SPLICES ARE SUBSIDIARY TO INSTALLATION OF NEW CONDUCTORS.
2. UTILITIES SHOWN ARE PROVIDED FOR INFORMATIONAL PURPOSES ONLY AND SHOULD BE FIELD VERIFIED PRIOR TO CONSTRUCTION.

N

0 25 50 100

LEGEND

- EXISTING HIGH MAST LIGHTING POLE (ASYM) (150')
- RELOCATED HIGH MAST LIGHTING POLE (ASYM) (150')
- EXISTING CONDUIT
- (X) CONDUCTOR IN CONDUIT, PVC SCHD 40 CONDUIT (TRENCH), RUN NUMBER (X) (SEE CONDUIT RUN TABLE)
- EXISTING ELECTRICAL SERVICE POLE
- EXISTING GROUND BOX
- PROPOSED GROUND BOX
- HIGH MAST ASYM LIGHT PATTERN DIRECTION
- (YYY) LIGHTING FIXTURE(S)
- TRAFFIC DIRECTION/TRAVEL LANE
- PROPOSED DITCH ℄

ITEM	DESC	DESCRIPTION	UNIT	EST QTY	FINAL QTY
104	2009	REMOVING CONC (RIPRAP)	SY		
416	2026	DRILL SHAFT (HIGH MAST POLE)(60 IN)	LF		
432	2050	RIPRAP STR (CONC)	CY		
496	2018	REMOVE STR (CONC)	EA		
618	2018	CONDT (PVC) (SCHD 40) (2")	LF	1215	
620	2007	ELEC CONDR (NO. 4) BARE	LF	1260	
620	2008	ELEC CONDR (NO. 4) INSULATED	LF	2710	
620	2011	ELEC CONDR (NO. 8) BARE	LF		
620	2012	ELEC CONDR (NO. 8) INSULATED	LF		
624	2008	GROUND BOX TY A (122311) W/APRON	EA	7	
690	2006	REMOVAL OF GROUND BOXES	EA	1	
6122	2003	RELOCATE HIGH MAST LIGHTING (150 FT)	EA		

PROPOSED CONDUIT & CONDUCTOR RUNS

RUN	RUN LENGTH	GROUND		POWER		CONDUIT	CIRCUIT (CKT)
		8 BARE	4 BARE	8 INSUL	4 INSUL	SCH 40 PVC	
	FT	FT	FT	FT	FT	FT	
3	40		45		2-45	40	"M"
4	220		225		2-225	220	"M"
5	90		95		4-95	90	"M"
6	270		275		2-275	270	"M"
7	270		275		2-275	270	"M"
8	45		50		2-50	45	"M"
9	100		105		2-105	100	"M"
10	155		160		2-160	155	"M"
11	25		30		2-30	25	"M"
TOTAL			1260		2710	1215	

STATE OF TEXAS
RENE U. GARZA
65409
REGISTERED PROFESSIONAL ENGINEER

Rene U Garza PE
6/3/11

REV. No.	DATE	REVISION	BY
△			
△			
△			

PBSJ
an Atkins company TBPE REG. # F-474

Texas Department of Transportation
Austin District
©2011 by TxDOT

SH 45 / O'CONNOR DRIVE ILLUMINATION LAYOUT STA 415+50 TO 425+00

SCALE: 1"=100' SHEET 2 OF 5

DESIGNED: RVP	FED. RD DIV. No.	STATE	PROJECT No.		HIGHWAY No.
CHECKED: SED	6	TEXAS			LP 1/SH 45

DRAWN: RVP	STATE DISTRICT	COUNTY	CONTROL No.	SECTION No.	JOB No.	SHEET No.
CHECKED: RUG	AUSTIN	WILLIAMSON	0683	06	027	573

PLOT DRIVER: RD*11x17*PDF.plt
PEN TABLE: plotordr*ocon.tbl
FILE: r:\trans-design\o'connor\cadd\ILL\OC45ILL02.dgn

DATE: 6/2/2011 TIME: 3:51:51 PM

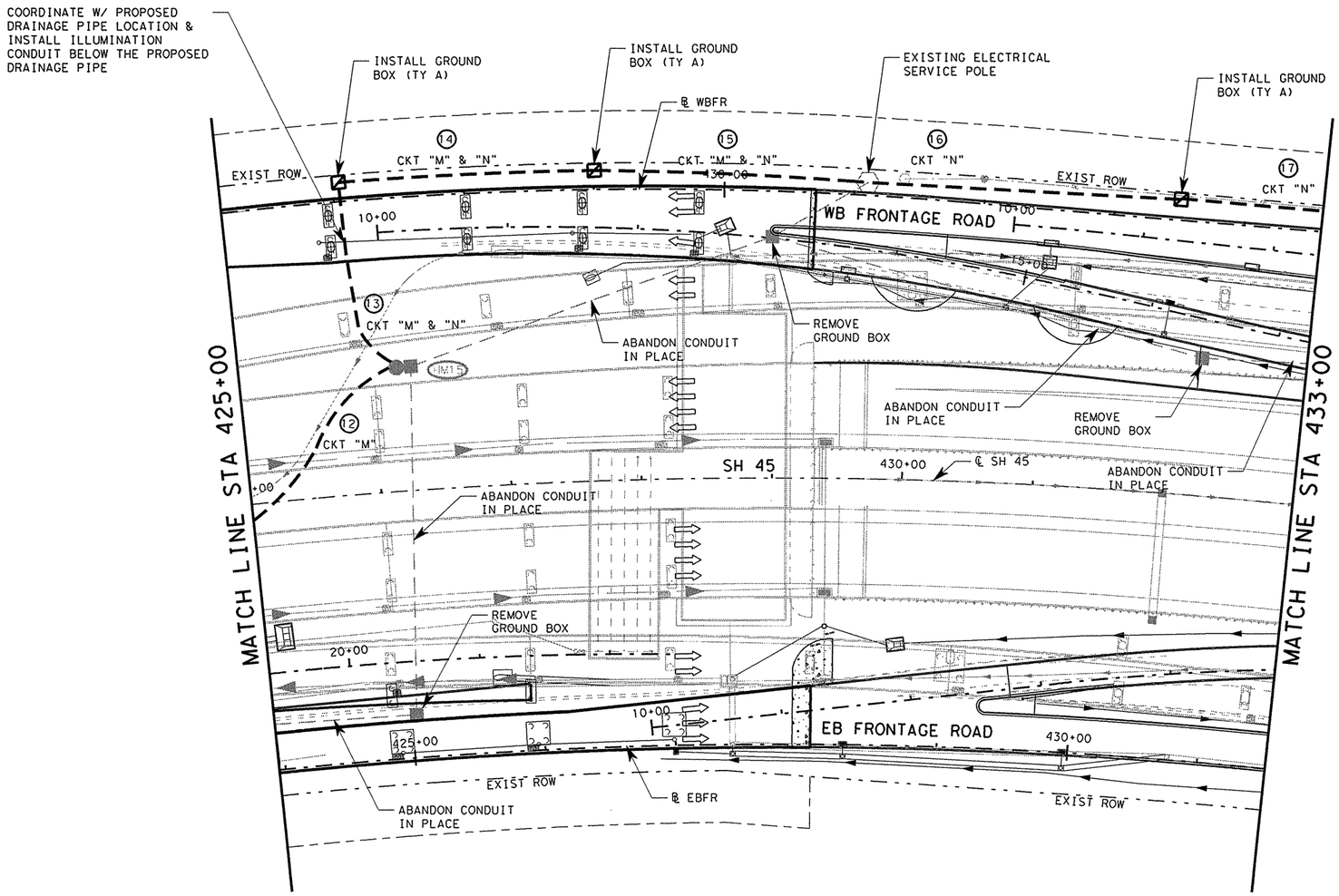

NOTES:

1. CONDUCTORS IN PROPOSED CONDUIT RUNS SHALL BE SPLICED TO EXISTING CONDUCTORS IN EXISTING GROUND BOXES. SPLICES ARE SUBSIDIARY TO INSTALLATION OF NEW CONDUCTORS.
2. UTILITIES SHOWN ARE PROVIDED FOR INFORMATIONAL PURPOSES ONLY AND SHOULD BE FIELD VERIFIED PRIOR TO CONSTRUCTION.

0 25 50 100

LEGEND

- EXISTING HIGH MAST LIGHTING POLE (ASYM)(150')
- RELOCATED HIGH MAST LIGHTING POLE (ASYM)(150')
- EXISTING CONDUIT
- (X) CONDUCTOR IN CONDUIT, PVC SCHD 40 CONDUIT (TRENCH), RUN NUMBER (X) (SEE CONDUIT RUN TABLE)
- EXISTING ELECTRICAL SERVICE POLE
- EXISTING GROUND BOX
- PROPOSED GROUND BOX
- HIGH MAST ASYM LIGHT PATTERN DIRECTION
- (YYY) LIGHTING FIXTURE(S)
- TRAFFIC DIRECTION/TRAVEL LANE
- PROPOSED DITCH ℄

ITEM	DESC	DESCRIPTION	UNIT	EST QTY	FINAL QTY
104	2009	REMOVING CONC (RIPRAP)	SY		
416	2026	DRILL SHAFT (HIGH MAST POLE)(60 IN)	LF		
432	2050	RIPRAP STR (CONC)	CY		
496	2018	REMOVE STR (CONC)	EA		
618	2018	CONDT (PVC) (SCHD 40) (2")	LF	1065	
620	2007	ELEC CONDR (NO. 4) BARE	LF	735	
620	2008	ELEC CONDR (NO. 4) INSULATED	LF	1470	
620	2011	ELEC CONDR (NO. 8) BARE	LF	930	
620	2012	ELEC CONDR (NO. 8) INSULATED	LF	1860	
624	2008	GROUND BOX TY A (122311) W/APRON	EA	3	
690	2006	REMOVAL OF GROUND BOXES	EA	3	
6122	2003	RELOCATE HIGH MAST LIGHTING (150 FT)	EA		

PROPOSED CONDUIT & CONDUCTOR RUNS

RUN	RUN LENGTH	GROUND 8 BARE	GROUND 4 BARE	POWER 8 INSUL	POWER 4 INSUL	CONDUIT SCH 40 PVC	CIRCUIT (CKT)
	FT	FT	FT	FT	FT	FT	
12	160		165		2-165	160	"M"
13	150	155	155	2-155	2-155	150	"M" & "N"
14	195	200	200	2-200	2-200	195	"M" & "N"
15	210	215	215	2-215	2-215	210	"M" & "N"
16	240	245		2-245		240	"N"
17	110	115		2-115		110	"N"
TOTAL		930	1095	1860	2190	1065	

STATE OF TEXAS
RENE U. GARZA
65409
REGISTERED PROFESSIONAL ENGINEER

Rene U. Garza PE
6/3/11

REV. No.	DATE	REVISION	BY
△			
△			
△			

PBSJ
an Atkins company
TBPE REG. # F-474

Texas Department of Transportation
Austin District
©2011 by TxDOT

SH 45 / O'CONNOR DRIVE ILLUMINATION LAYOUT STA 425+00 TO 433+00

SCALE: 1"=100'

SHEET 3 OF 5

DESIGNED: RVP	FED. RD DIV. No.	STATE	PROJECT No.			HIGHWAY No.	
CHECKED: SED	6	TEXAS				LP 1/SH 45	
DRAWN: RVP	STATE DISTRICT	COUNTY	CONTROL No.	SECTION No.	JOB No.	SHEET No.	
CHECKED: RUG	AUSTIN	WILLIAMSON	0683	06	027	574	

PLOT DRIVER: RD*11x17*PDF.plt
PEN TABLE: plotordr*ocon.tbl
FILE: r:\trans-design\o'connor\cadd\ILL\OC45ILL03.dgn

DATE: 6/2/2011 TIME: 3:51:54 PM

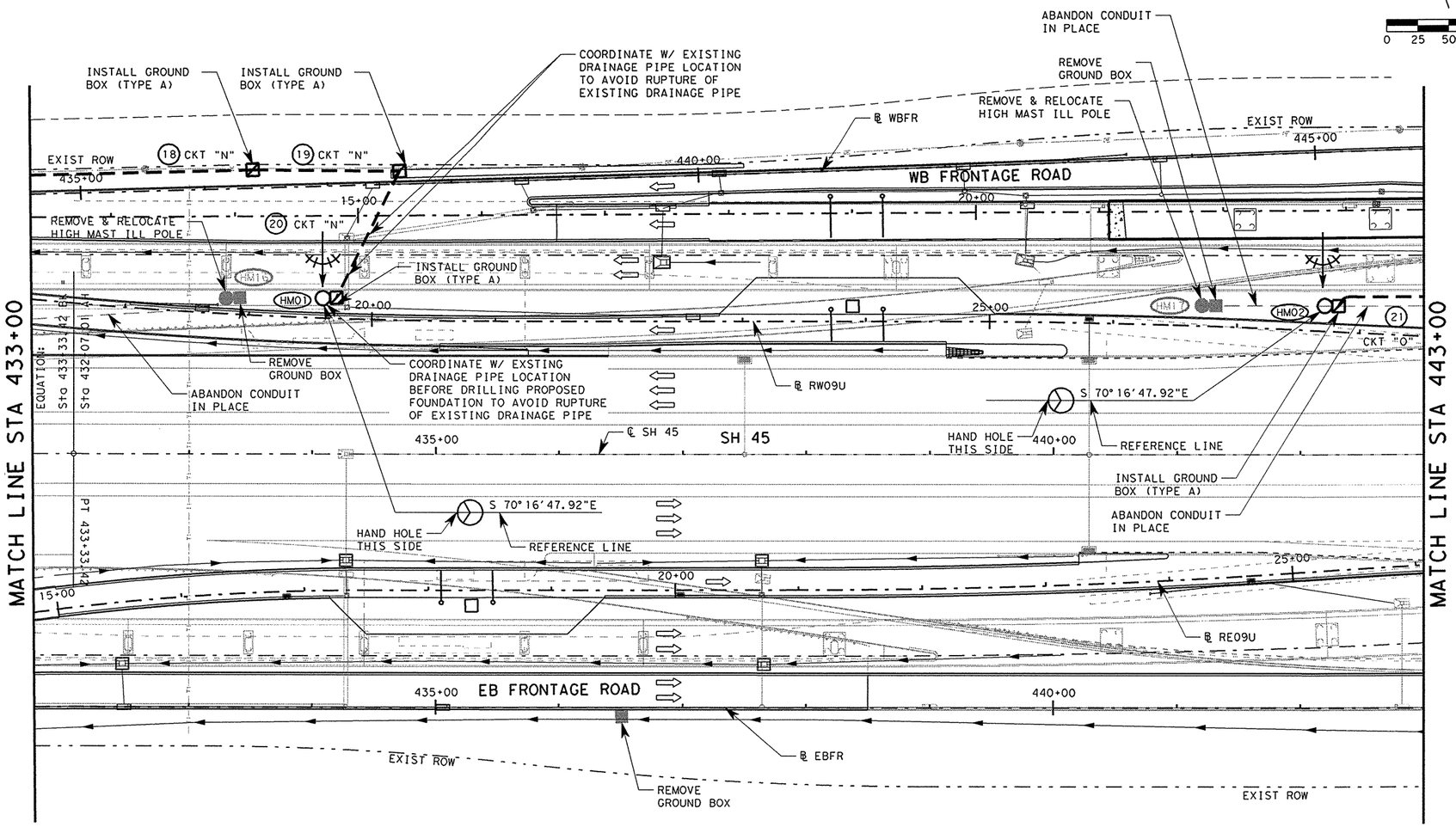

NOTES:

1. CONDUCTORS IN PROPOSED CONDUIT RUNS SHALL BE SPLICED TO EXISTING CONDUCTORS IN EXISTING GROUND BOXES. SPLICES ARE SUBSIDIARY TO INSTALLATION OF NEW CONDUCTORS.
2. UTILITIES SHOWN ARE PROVIDED FOR INFORMATIONAL PURPOSES ONLY AND SHOULD BE FIELD VERIFIED PRIOR TO CONSTRUCTION.

LEGEND

- EXISTING HIGH MAST LIGHTING POLE (ASYM) (150')
- RELOCATED HIGH MAST LIGHTING POLE (ASYM) (150')
- EXISTING CONDUIT
- (X) CONDUCTOR IN CONDUIT, PVC SCHD 40 CONDUIT (TRENCH), RUN NUMBER (X) (SEE CONDUIT RUN TABLE)
- EXISTING ELECTRICAL SERVICE POLE
- EXISTING GROUND BOX
- PROPOSED GROUND BOX
- HIGH MAST ASYM LIGHT PATTERN DIRECTION
- (YYY) LIGHTING FIXTURE(S)
- TRAFFIC DIRECTION/TRAVEL LANE
- PROPOSED DITCH ℄

ITEM	DESC	DESCRIPTION	UNIT	EST QTY	FINAL QTY
104	2009	REMOVING CONC (RIPRAP)	SY	37.5	
416	2026	DRILL SHAFT (HIGH MAST POLE)(60 IN)	LF	64	
432	2050	RIPRAP STR (CONC)	CY	5.2	
496	2018	REMOVE STR (CONC)	EA	2	
618	2018	CONDT (PVC) (SCHD 40) (2")	LF	495	
620	2007	ELEC CONDR (NO. 4) BARE	LF		
620	2008	ELEC CONDR (NO. 4) INSULATED	LF		
620	2011	ELEC CONDR (NO. 8) BARE	LF	515	
620	2012	ELEC CONDR (NO. 8) INSULATED	LF	1030	
624	2008	GROUND BOX TY A (122311) W/APRON	EA	4	
690	2006	REMOVAL OF GROUND BOXES	EA	2	
6122	2003	RELOCATE HIGH MAST LIGHTING (150 FT)	EA	2	

PROPOSED CONDUIT & CONDUCTOR RUNS

RUN	RUN LENGTH	GROUND 8 BARE	GROUND 4 BARE	POWER 8 INSUL	POWER 4 INSUL	CONDUIT SCH 40 PVC	CIRCUIT (CKT)
	FT	FT	FT	FT	FT	FT	
18	180	185		2-185		180	"N"
19	120	125		2-125		120	"N"
20	120	125		2-125		120	"N"
21	75	80		2-80		75	"O"
TOTAL		515		1030		495	

ROADWAY ILLUMINATION ASSEMBLY SUMMARY

STD NO.	STATION & OFFSET	TYPE	REMARKS	SP/CKT	DRILL SHAFT DEPTH (LF)
HM01	SH 45 STA 434+09, 127' LT	HI MAST ILL ASM (12-400W)S(ASYM)	REMOVE & RELOCATE	A-4/N	32
HM02	SH 45 STA 442+20, 122' LT	HI MAST ILL ASM (12-400W)S(ASYM)	REMOVE & RELOCATE	A-5/O	32

STATE OF TEXAS
RENE U. GARZA
65409
REGISTERED PROFESSIONAL ENGINEER

Rene U Garza PE
6/3/11

REV. No.	DATE	REVISION	BY
△			
△			
△			

PBSJ
an Atkins company TBPE REG. # F-474

Texas Department of Transportation
Austin District
©2011 by TxDOT

SH 45 / O'CONNOR DRIVE ILLUMINATION LAYOUT STA 433+00 TO 443+00

SCALE: 1"=100' SHEET 4 OF 5

DESIGNED: RVP	FED. RD DIV. No.	STATE	PROJECT No.			HIGHWAY No.
CHECKED: SED	6	TEXAS				LP 1/SH 45
DRAWN: RVP	STATE DISTRICT	COUNTY	CONTROL No.	SECTION No.	JOB No.	SHEET No.
CHECKED: RUG	AUSTIN	WILLIAMSON	0683	06	027	575

PLOT DRIVER: RDx11x17xPDF.pltr
PEN TABLE: plotordr*ocon.tbl
FILE: r:\trans-design\o'connor\cadd\ILL\OC45ILL04.dgn

DATE: 6/2/2011 TIME: 3:51:57 PM

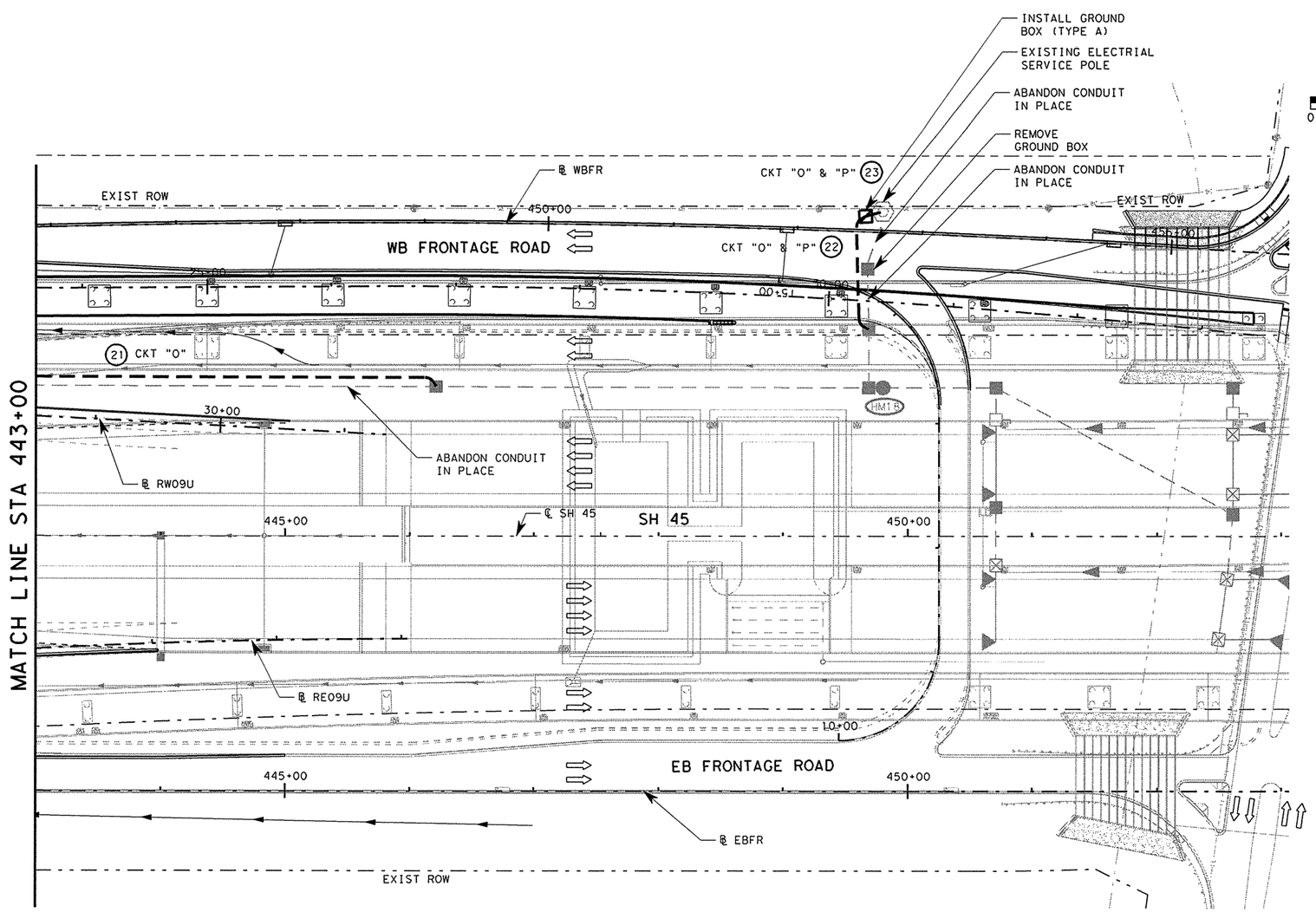

NOTES:

1. CONDUCTORS IN PROPOSED CONDUIT RUNS SHALL BE SPLICED TO EXISTING CONDUCTORS IN EXISTING GROUND BOXES. SPLICES ARE SUBSIDIARY TO INSTALLATION OF NEW CONDUCTORS.
2. UTILITIES SHOWN ARE PROVIDED FOR INFORMATIONAL PURPOSES ONLY AND SHOULD BE FIELD VERIFIED PRIOR TO CONSTRUCTION.

0 25 50 100

LEGEND

- EXISTING HIGH MAST LIGHTING POLE (ASYM) (150')
- RELOCATED HIGH MAST LIGHTING POLE (ASYM) (150')
- EXISTING CONDUIT
- (X) CONDUCTOR IN CONDUIT, PVC SCHD 40 CONDUIT (TRENCH), RUN NUMBER (X) (SEE CONDUIT RUN TABLE)
- EXISTING ELECTRICAL SERVICE POLE
- EXISTING GROUND BOX
- PROPOSED GROUND BOX
- HIGH MAST ASYM LIGHT PATTERN DIRECTION
- (YYY) LIGHTING FIXTURE(S)
- TRAFFIC DIRECTION/TRAVEL LANE
- PROPOSED DITCH ℄

STATE OF TEXAS
RENE U. GARZA
65409
REGISTERED
PROFESSIONAL ENGINEER

Rene U Garza PE
6/3/11

REV. NO.	DATE	REVISION	BY
△			
△			
△			

PBSJ
an Atkins company TBPE REG. # F-474

Texas Department of Transportation
Austin District
©2011 by TxDOT

SH 45 / O'CONNOR DRIVE ILLUMINATION LAYOUT STA 443+00 TO 453+00

SCALE: 1"=100' SHEET 5 OF 5

DESIGNED: RVP	FED. RD DIV. No.	STATE	PROJECT No.		HIGHWAY No.	
CHECKED: SED	6	TEXAS			LP 1/SH 45	
DRAWN: RVP	STATE DISTRICT	COUNTY	CONTROL No.	SECTION No.	JOB No.	SHEET No.
CHECKED: RUG	AUSTIN	WILLIAMSON	0683	06	027	576

SHEET SUMMARY

ITEM	DESC	DESCRIPTION	UNIT	EST QTY	FINAL QTY
104	2009	REMOVING CONC (RIPRAP)	SY		
416	2026	DRILL SHAFT (HIGH MAST POLE) (60 IN)	LF		
432	2050	RIPRAP STR (CONC)	CY		
496	2018	REMOVE STR (CONC)	EA		
618	2018	CONDT (PVC) (SCHD 40) (2")	LF	440	
620	2007	ELEC CONDR (NO. 4) BARE	LF		
620	2008	ELEC CONDR (NO. 4) INSULATED	LF		
620	2011	ELEC CONDR (NO. 8) BARE	LF	455	
620	2012	ELEC CONDR (NO. 8) INSULATED	LF	1160	
624	2008	GROUND BOX TY A (122311) W/APRON	EA	1	
690	2006	REMOVAL OF GROUND BOXES	EA	1	
6122	2003	RELOCATE HIGH MAST LIGHTING (150 FT)	EA		

PROPOSED CONDUIT & CONDUCTOR RUNS

RUN	RUN LENGTH	GROUND		POWER		CONDUIT	CIRCUIT (CKT)
		8 BARE	4 BARE	8 INSUL	4 INSUL	SCH 40 PVC	
	FT	FT	FT	FT	FT	FT	
21	325	330		2-330		325	"O"
22	100	105		4-105		100	"O" & "P"
23	15	20		4-20		15	"O" & "P"
TOTAL		455		1160		440	

PLOT DRIVER: RD*11x17*PDF.plt
PEN TABLE: plotordr*ocon.tbl
FILE: r:\trans-design\o'connor\cadd\ILL\OC451ILL05.dgn

NOTES:

1. Pole, Ring, and Ring Support shall be assembled and erected so that Reference Line is parallel to center line of roadway or as shown on "Lighting Layouts" sheets.
2. Fixture Placement on ring shall provide a min. Clearance of 7" between Fixtures.

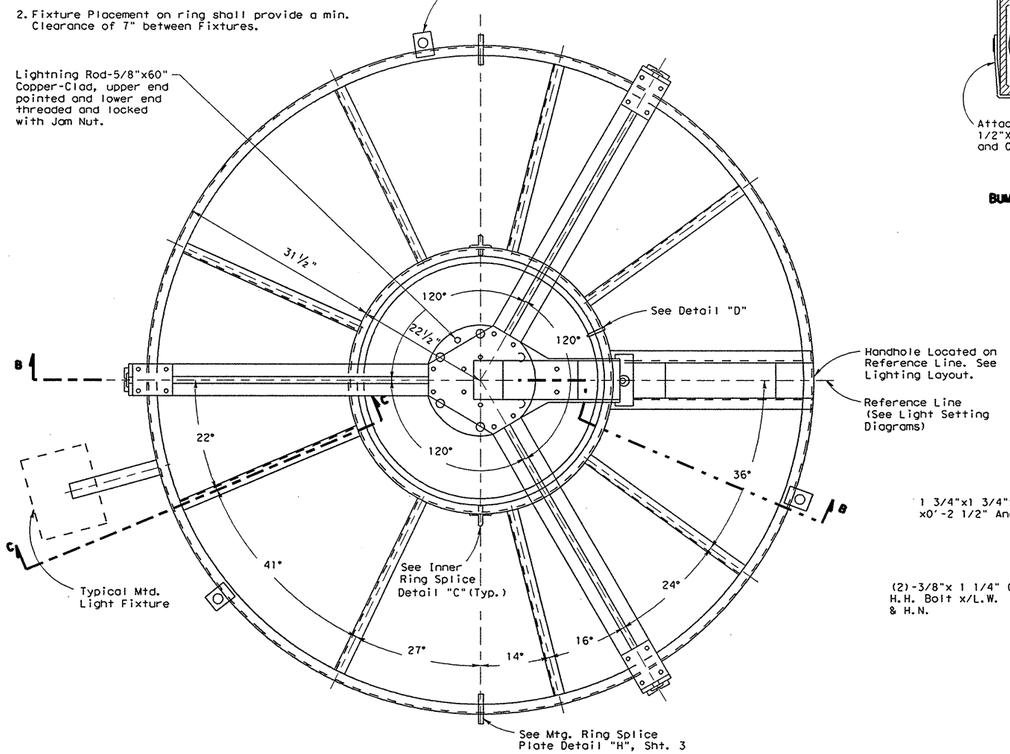

LIGHT MOUNTING RING & SUPPORT ASSEMBLY

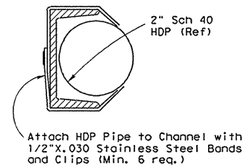

DETAIL "D"

BUMPER RING ATTACHMENT

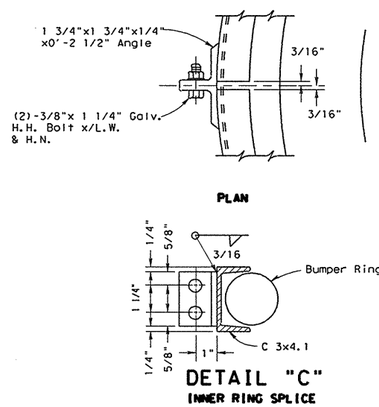

DETAIL "C"

INNER RING SPLICE

* As required by Trunnion Adapter supplied.

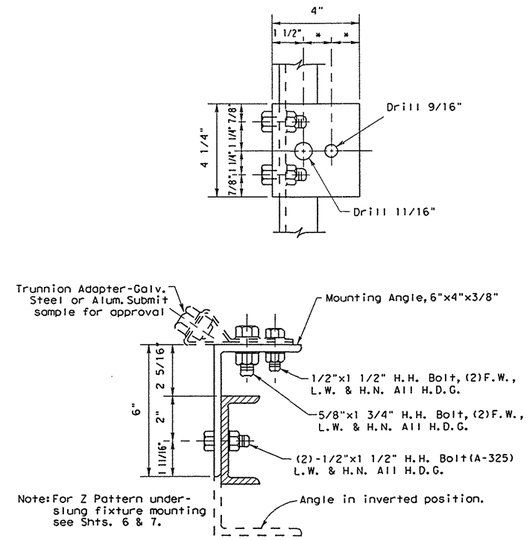

Note: Aiming capabilities may be by method shown or by Steel Mounting-Aiming Device as approved by the Engineer. Mark position of fixture with center punch or drill after fixture has been aligned to the right position on the roadway, as directed by the Engineer.

SECTION C-C

(FOR TRUNNION MOUNT)

NOTE: Provide S.S. or glav. cable safety lanyard for Light Fixture when Trunnion Mount is used.

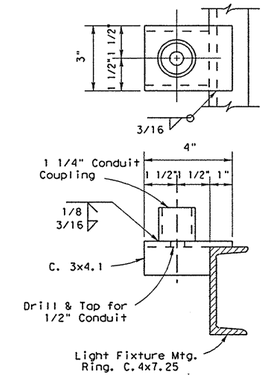

DETAIL "E"

(CONDUIT ATTACHMENT FOR OBSTRUCTION LIGHTS. TYPICAL (3) PLACES)

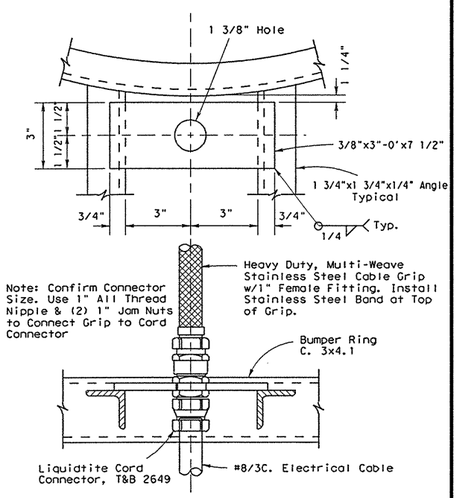

SECTION D-D

NOTE: COVER CORD WITH HEAT SHRINK TUBING FROM CABLE GRIP TO WITHIN ONE INCH OF GRIP TO CONNECTOR TRANSITION PRIOR TO INSTALLING CABLE GRIP.

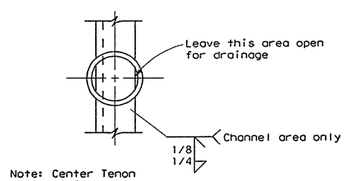

Note: Center Tenon on Channel

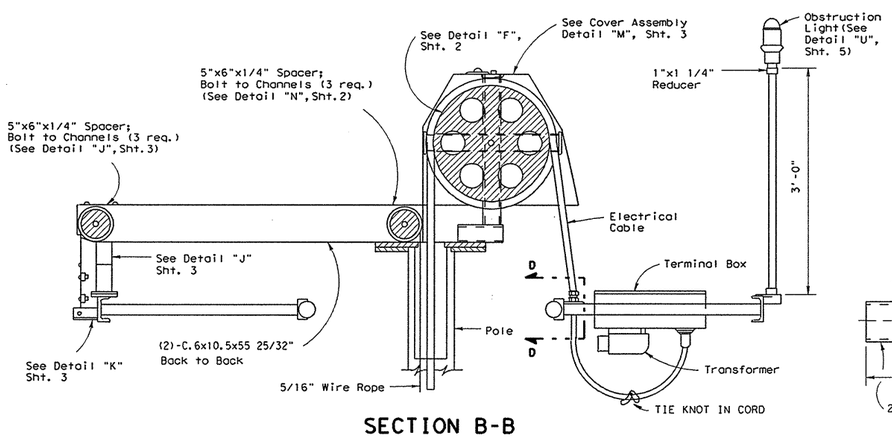

SECTION B-B

* Note: Tenon Length to be Determined by Fixture Used and Required Clearance.

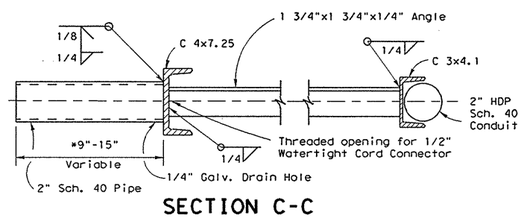

SECTION C-C

(FOR AREALIGHTS)

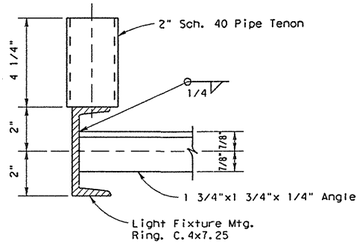

SECTION C-C

(FOR FLOODLIGHTS)

DISCLAIMER
The use of this standard is governed by the "Texas Engineering Practice Act". No warranty of any kind is made by TxDOT for any purpose whatsoever. TxDOT assumes no responsibility for the conversion of this standard to other formats or for incorrect results or damages resulting from its use.

DN: LR CK: CW DW: DN CK: MT

DATE: ACC: d58hplc/usr/d580504 FILE:

LEVELS C 1 2 3 4 5 6 7 8 / 17 18 19 20 21 22 23 24 / 33 34 35 36 37 38 39 40 41 42 43 44 45 46 47 48 / 49 50 51 52 53 54 55 56 57 58 59 60 61 62 63

STANDARD PLANS
TEXAS DEPARTMENT OF TRANSPORTATION
Traffic Operations Division

HIGH MAST ILLUMINATION DETAILS

HMID(1)-03

© TxDOT January 1986 DN:- CK:- DW:- CK:- MSG NO.:

REVISIONS 5-86 10-14-87 4-87 4-96 5-87 10-1-87

DISTRICT	FEDERAL AID PROJECT	SHEET
AUSTIN		577
COUNTY	CONTROL-SECT-JOB	HIGHWAY
WILLIAMSON	0683-06-027	SH 45 LOOP 1

764

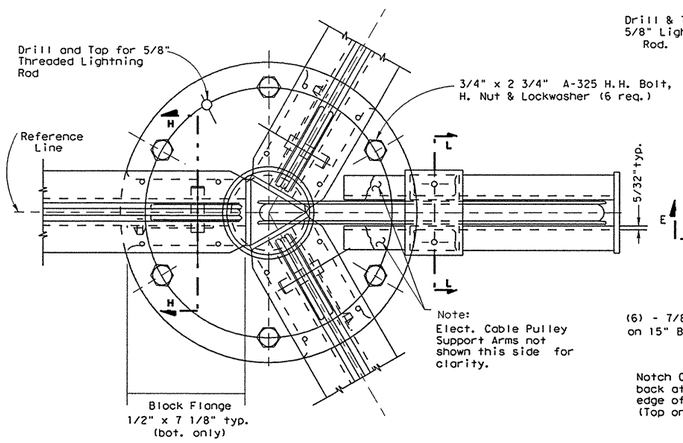

PLAN VIEW

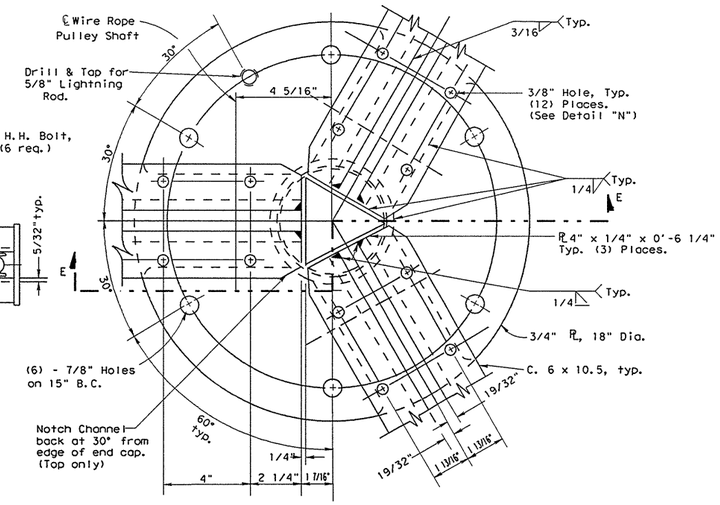

DETAIL "G"
TOP PLATE CONNECTION
(LESS ELECT. CABLE PULLEY SUPPORT)
(SEE DETAIL "L")

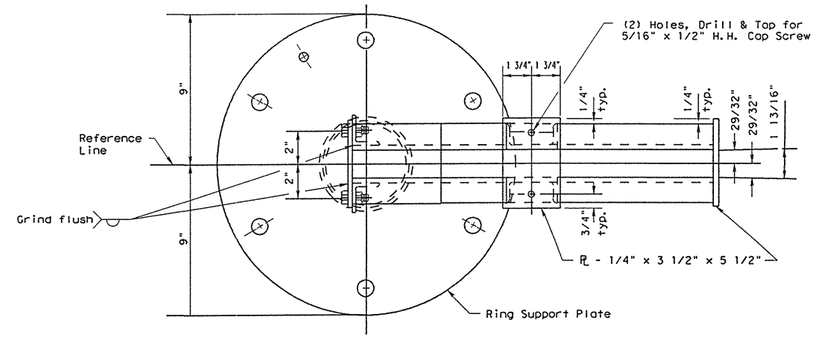

PLAN VIEW

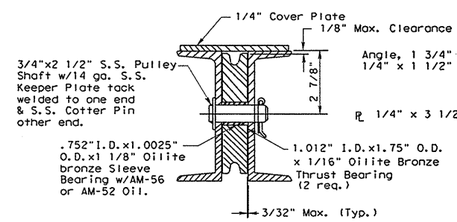

SECTION "H-H"
PULLEY MOUNTING FOR RING SUPPORT ARMS

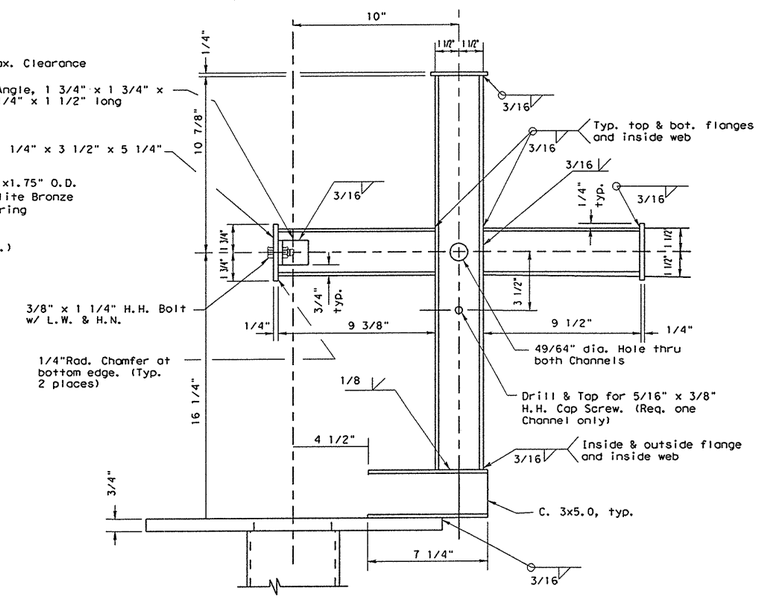

DETAIL "L"
ELECT. CABLE PULLEY SUPPORT
(RING SUPPORT ARMS NOT SHOWN FOR CLARITY)

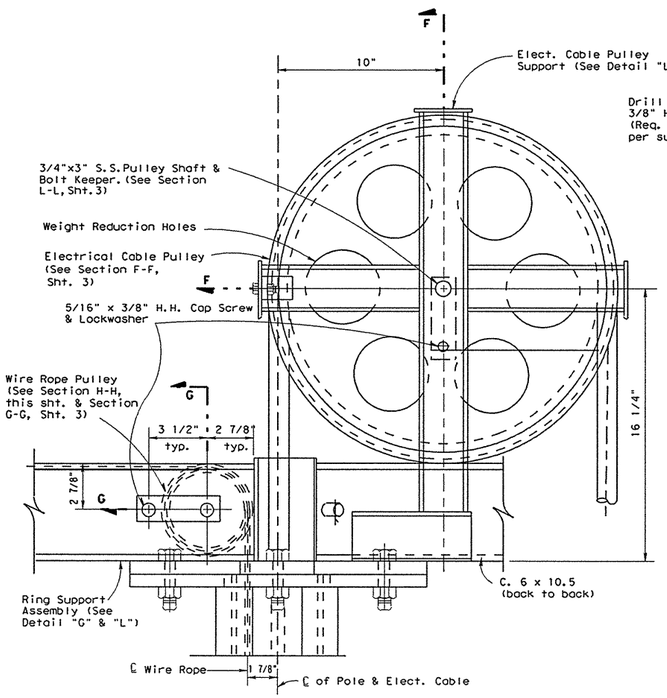

DETAIL "F"
RING SUPPORT ASSEMBLY
(NEAR SIDE SUPPORT ARM & ELECT. CABLE PULLEY COVER NOT SHOWN FOR CLARITY)

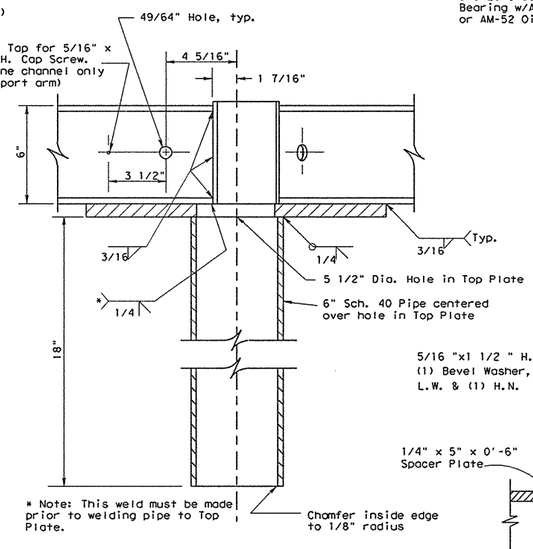

SECTION "E - E"

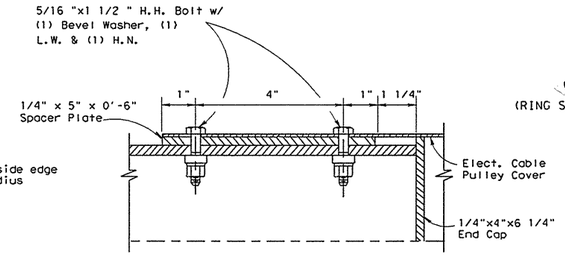

DETAIL "N"

DISCLAIMER
The use of this standard is governed by the "Texas Engineering Practice Act". No warranty of any kind is made by TxDOT for any purpose whatsoever. TxDOT assumes no responsibility for the conversion of this standard to other formats or for incorrect results or damages resulting from its use.

DN: LR
CK: CW
DW: DN
CK: MT

DATE:
FILE: d58hplc/usr/d580504

LEVELS 1 2 3 4 5 6 7 8 / 9 10 11 12 13 14 15 16 / 17 18 19 20 21 22 23 24 / 25 26 27 28 29 30 31 32 / 33 34 35 36 37 38 39 40 41 42 43 44 45 46 47 48 / 49 50 51 52 53 54 55 56 57 58 59 60 61 62 63

STANDARD PLANS
TEXAS DEPARTMENT OF TRANSPORTATION
Traffic Operations Division

HIGH MAST ILLUMINATION DETAILS

HMID(2)-03

© TxDOT January 1986

DN: -	CK: -	DW: -	CK: -	MEG NO.:

REVISIONS
4-86 4-96
5-86
5-87
12-87

DISTRICT	FEDERAL AID PROJECT	SHEET
AUSTIN		578
COUNTY	CONTROL-SECT-JOB	HIGHWAY
WILLIAMSON	0683-06-027	SH 45 (LOOP 1)

DISCLAIMER
The use of this standard is governed by the "Texas Engineering Practice Act". No warranty of any kind is made by TxDOT for any purpose whatsoever. TxDOT assumes no responsibility for the conversion of this standard to other formats or for incorrect results or damages resulting from its use.

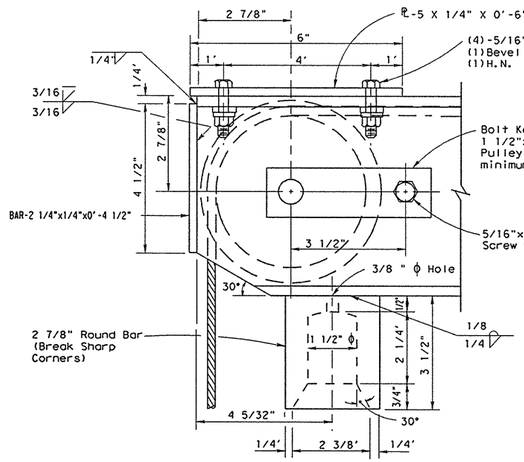

DETAIL "J"

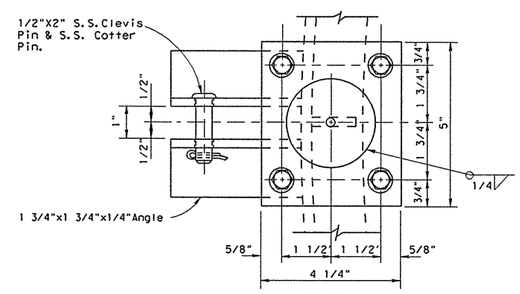

PLAN

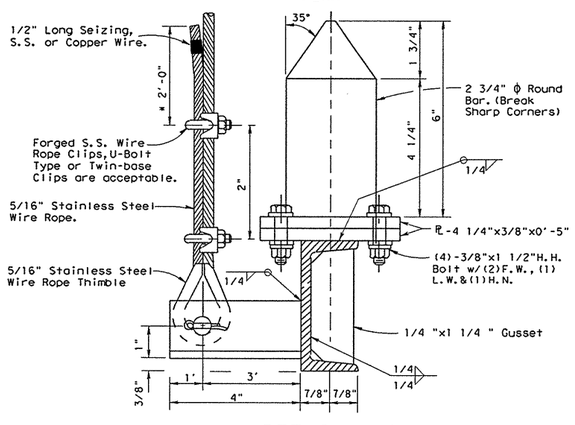

DETAIL "K"

MOUNTING RING CONNECTION & STABILIZER

* EXTRA 2'-0" of wire cable to be attached to ring with SS Bands as directed by Engineer.

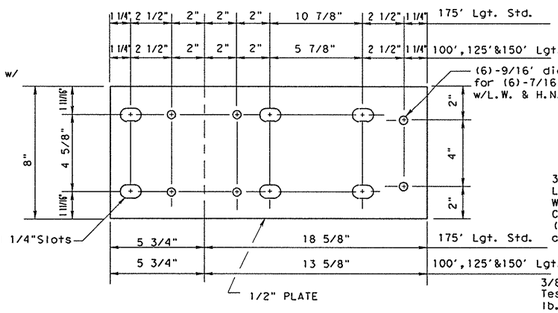

DETAIL "V"

WINCH MOUNTING PLATE

NOTE: Dimensions may vary-Verify with winch manufacturer.

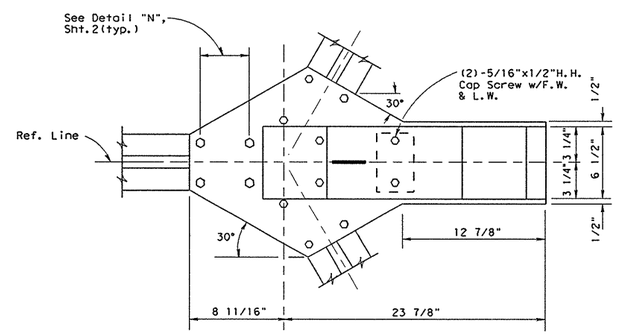

PLAN

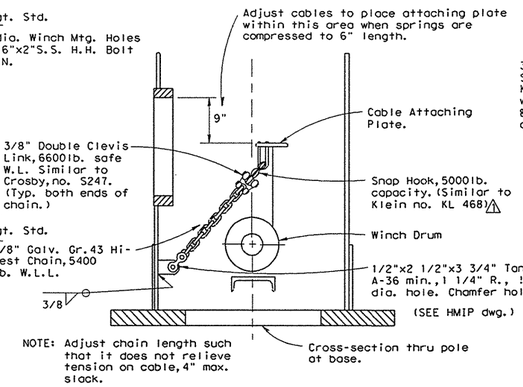

SAFETY LANYARD DETAIL

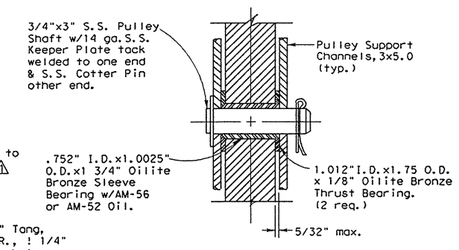

SECTION L-L

ELECTRICAL CABLE PULLEY MOUNTING

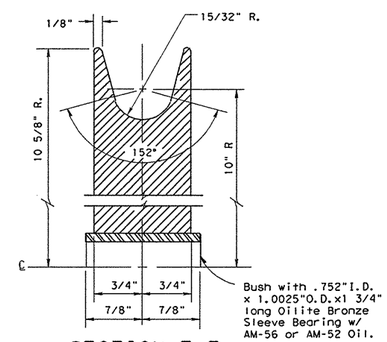

SECTION F-F

ELECTRICAL CABLE PULLEY

(Pulley material to be aluminum alloy, Type 356-T6 or equal)

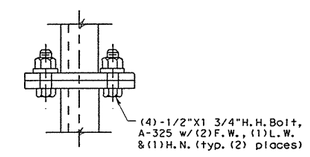

PLAN

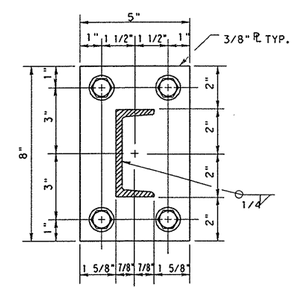

DETAIL "H"

MOUNTING RING SPLICE PLATE

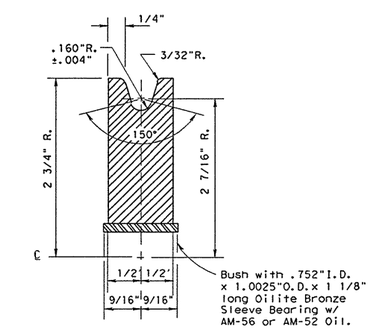

SECTION G-G

WIRE ROPE PULLEY

(Pulley material to be plated steel or Stainless Steel)

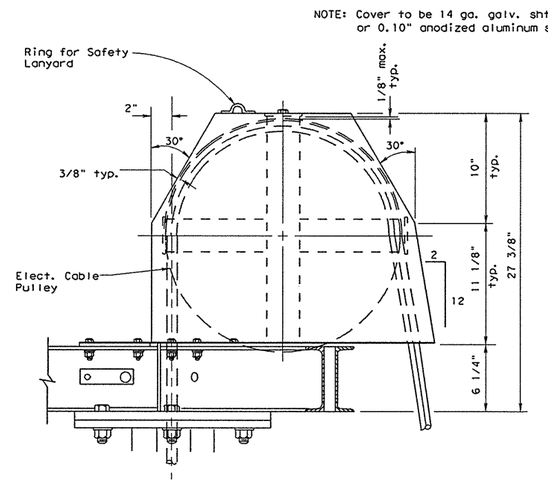

DETAIL "M"

COVER CAP ASSEMBLY

STANDARD PLANS
TEXAS DEPARTMENT OF TRANSPORTATION
Traffic Operations Division

HIGH MAST ILLUMINATION DETAILS

HMID(3)-03

© TxDOT January 1986

DN: -	CK: -	DW: -	CK: -	REC NO.:

REVISIONS
5-5-86 4-96
5-10-86
10-87
10-88

DISTRICT	FEDERAL AID PROJECT	SHEET
AUSTIN		579
COUNTY	CONTROL-SECT-JOB	HIGHWAY
WILLIAMSON	0683-06-027	SH 45 LOOP 1

766

DN: LR
CK: CW
DW: DN
CK: MT

ID DATE:
ACC: d58hplc/usr/d580504
FILE:

LEVELS
1 2 3 4 5 6 7 8
1 7 18 19 20 21 22 23 24
3 33 34 35 36 37 38 39 40 41 42 43 44 45 46 47 48
49 50 51 52 53 54 55 56 57 58 59 60 61 62 63

DISCLAIMER
The use of this standard is governed by the "Texas Engineering Practice Act". No warranty of any kind is made by TxDOT for any purpose whatsoever. TxDOT assumes no responsibility for the conversion of this standard to other formats or for incorrect results or damages resulting from its use.

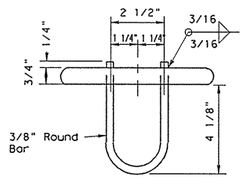

VIEW "M-M"

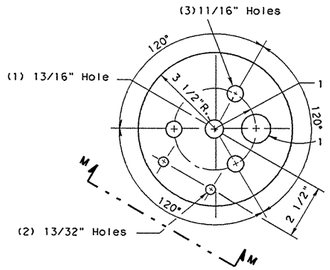

PLAN VIEW

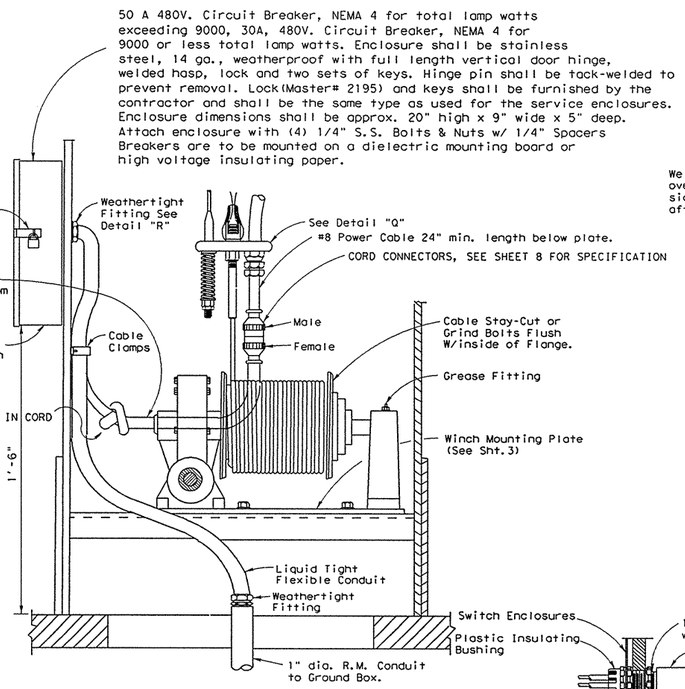

SECTION J-J
(WINCH ASSEMBLY)

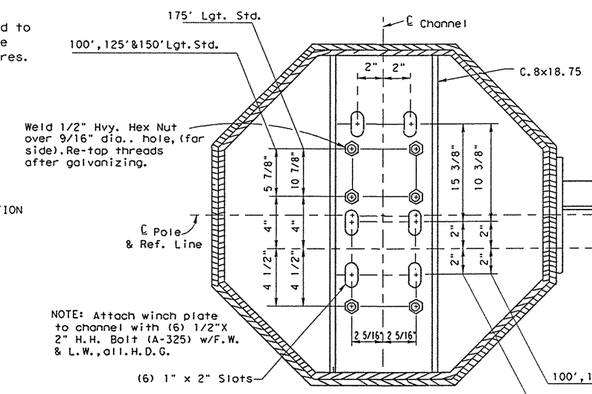

DETAIL "P"
(WINCH MOUNTING CHANNEL)
Dimensions may vary-Verify with winch manufacturer.

NOTE:
The drive train of the Power Drive Assembly between the driving motor and the winch shall be within two degrees of perfect alignment.

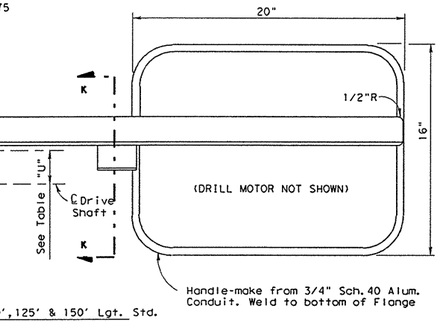

TABLE OF "U" DIMENSIONS

Pole Ht. Ft.	8 Sided 80 MPH	8 Sided 100 MPH	12 Sided 80 MPH	12 Sided 100 MPH
100	3 1/2"	3 1/2"	2 1/2"	2 1/2"
125	3 1/2"	3 1/2"	2 1/2"	2 1/2"
150	3 1/2"	3 1/2"	2 1/2"	2 1/2"
175	4 1/2"	4 1/2"	3 1/2"	3 1/2"

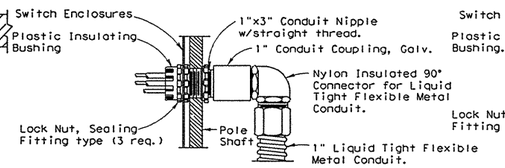

(POWER FEED FROM GROUND BOX)

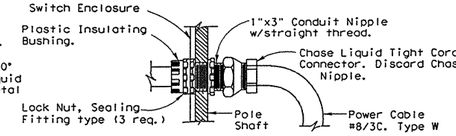

(POWER OUT TO LIGHT RING)

DETAIL "R"
ENCLOSURE ENTRANCES

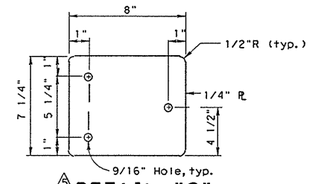

DETAIL "S"
(WINCH DRIVE ACCESS COVER)

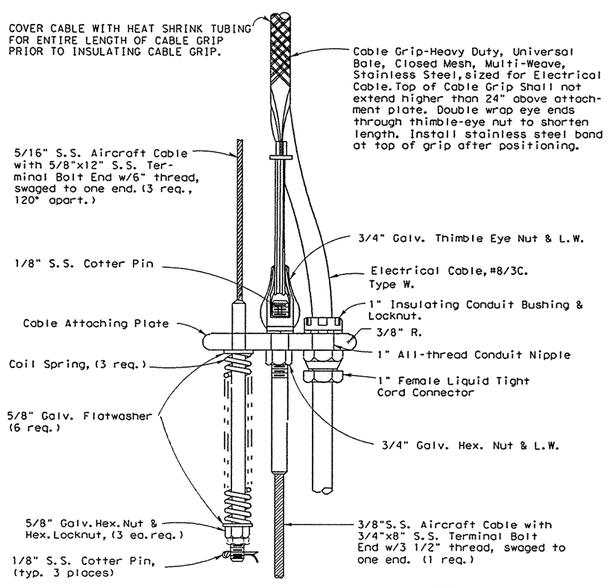

DETAIL "Q"
(CABLE ATTACHING PLATE)

NOTE: 3/8"Cable for this Project shall be 19x7 Rotation Resistant per Sheet 9.

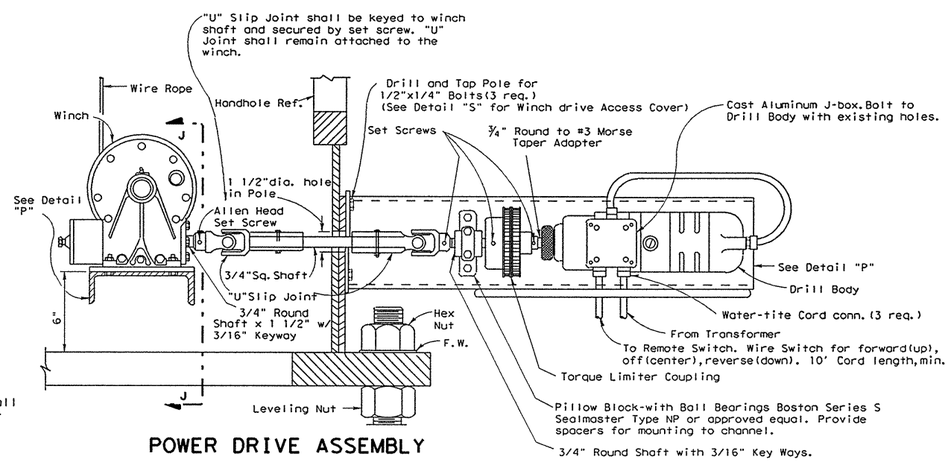

POWER DRIVE ASSEMBLY

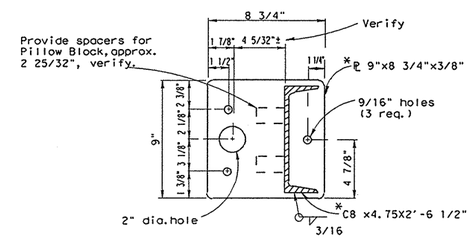

SECTION K-K
(DRILL MOTOR MOUNTING PLATE)
* Make from 6061-T6 Aluminum

STANDARD PLANS
TEXAS DEPARTMENT OF TRANSPORTATION
Traffic Operations Division

HIGH MAST ILLUMINATION DETAILS

HMID(4)-03

©TxDOT January 1986

DN: -	CK: -	DW: -	CK: -	NEG NO.:

REVISIONS
4-86 12-87
5-86 4-89
12-3-86 10-93
12-8-86 4-96

DISTRICT	FEDERAL AID PROJECT	SHEET
AUSTIN		580
COUNTY	CONTROL-SECT-JOB	HIGHWAY
WILLIAMSON	0683-06-027	SH 95 LOOP 1

760

DN: LR
CK: CW
DW: DN
CK: MT

ID DATE:
ACC: d58nplc/usr/d580504
FILE:

LEVELS
1 2 3 4 5 6 7 8
17 18 19 20 21 22 23 24
33 34 35 36 37 38 39 40 41 42 43 44 45 46 47 48
49 50 51 52 53 54 55 56 57 58 59 60 61 62 63

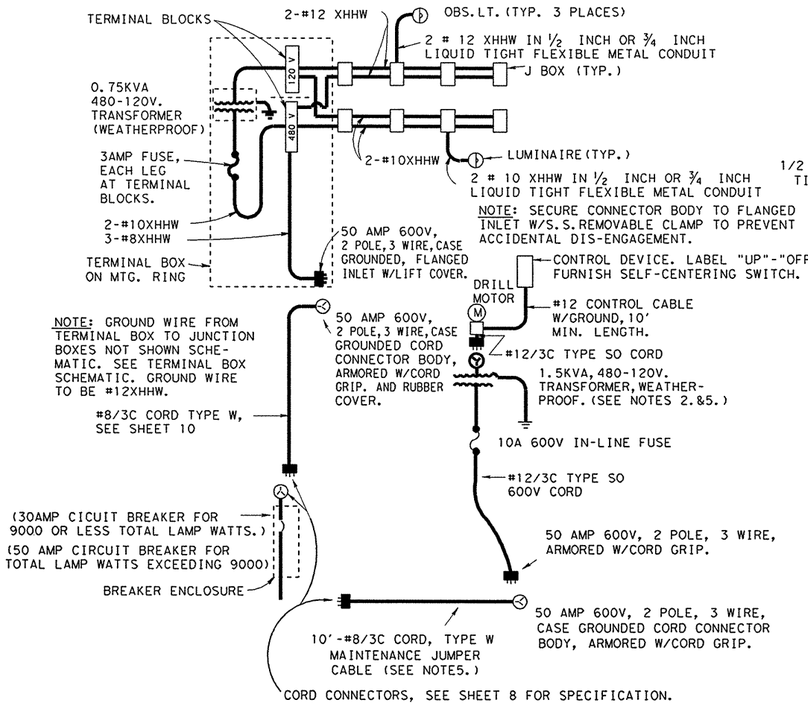

ONE-LINE SCHEMATIC

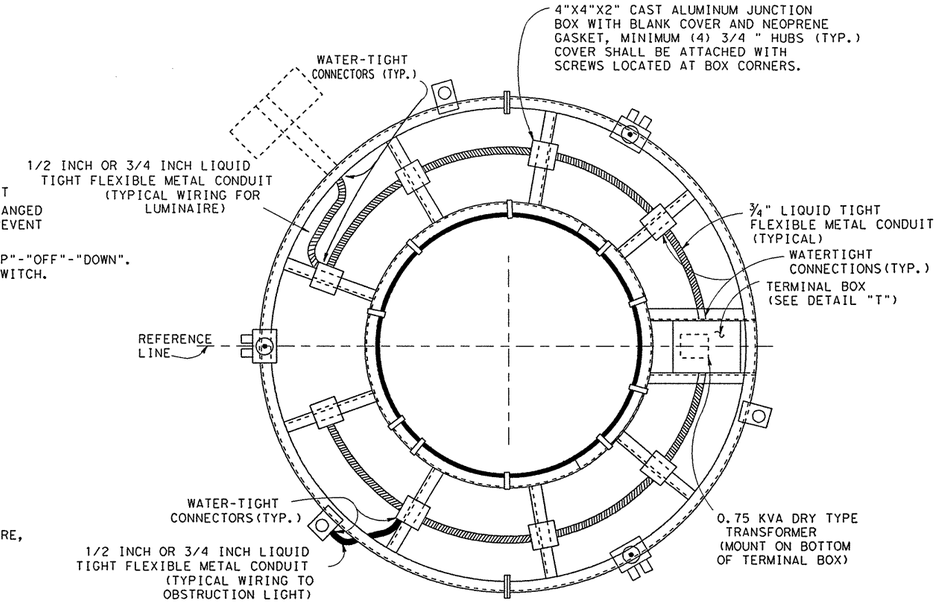

LIGHT MOUNTING RING

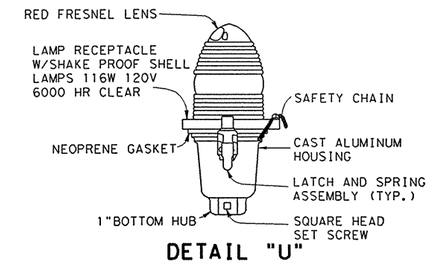

DETAIL "U"
(OBSTRUCTION LIGHT)

NOTES:

1. PLUGS, CONNECTOR BODIES AND FLANGED INLETS AT CORD TO RING CONNECTION SHALL BE "TWIST LOCK" TYPE, 3-PRONG, RATED 50 AMPS AT 600V, AND 20 AMPS FOR 120 V. 50 AMP CONNECTORS SHALL BE 3 WIRE CASE GROUNDED, ARMORED, WITH CORD GRIP, 20 AMP CONNECTOR SHALL BE 3 WIRE GROUNDING WITH CORD GRIP, NEMA TYPE L5-20.
2. PROVIDE HANDLE ON 1.5KVA TRANSFORMER FOR PORTABILITY. (SEE ONE-LINE SCHEMATIC)
3. CIRCUIT BREAKERS SHALL BE ITE #E43B030 OR #E43B050, SQUARE "D" #FAL24030 S/N OR #FAL24050 S/N, OR EQUAL.
4. CONDUIT ENTRIES INTO TERMINAL BOX SHALL BE INTO THE SIDE OF THE BOX.
5. A MINIMUM OF ONE (1) MAINTENANCE JUMPER CABLE SHALL BE SUPPLIED FOR EACH PROJECT. SUPPLY ONE (1) PORTABLE TRANSFORMER FOR EACH POWER DRIVE UNIT REQUIRED FOR PROJECT.

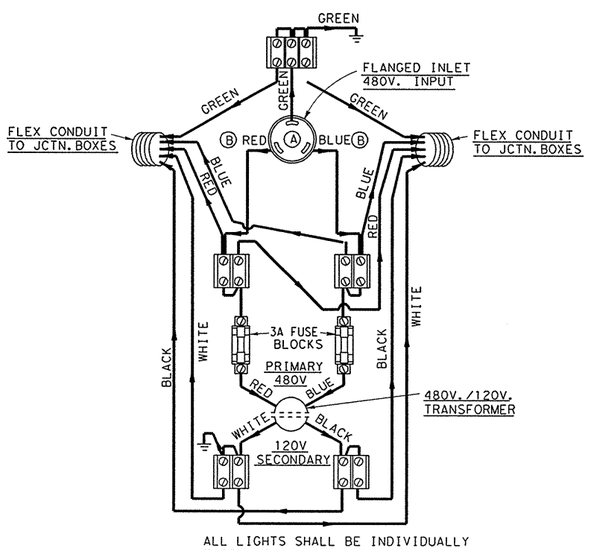

TERMINAL BOX SCHEMATIC

NOTES:
1. OBSTRUCTION LIGHTS COLOR CODE: FROM SECONDARY SIDE OF TRANSFORMER THROUGH-OUT-CIRCUIT TO SOCKET, WHITE-NEUTRAL, BLACK-LOAD.
2. POWER SUPPLY CORD TO FLANGED INLET: GREEN-GROUND, WHITE LINE, BLACK LINE. FROM FLANGED INLET Ⓐ TO TERMINAL BLOCKS: GREEN-GROUND, RED LINE, BLUE-LINE. FROM THERE ON ALL 480V. CIRCUIT WIRES TO BE RED AND BLUE TO JUNCTION BOXES.
3. WIRE SIZE FROM POWER SUPPLY TO TERMINAL BLOCKS SHALL BE #8 AWG-SEE Ⓑ.
4. WIRE SIZE FROM TERMINAL BLOCKS TO JUNCTION BOXES SHALL BE #12 AWG.
5. MOUNT TERMINAL BLOCKS ON 3/4" EXTERIOR GRADE PLYWOOD.
6. FOR 2-WIRE, 480V. SERVICE, OMIT FUSE IN GROUNDED CONDUCTOR IN LEADS TO TRANSFORMER.

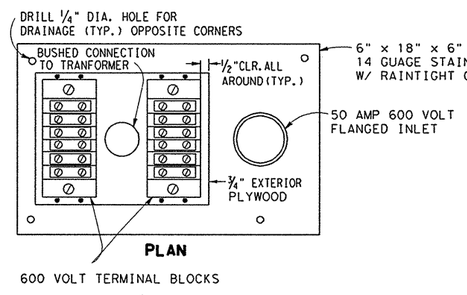

PLAN

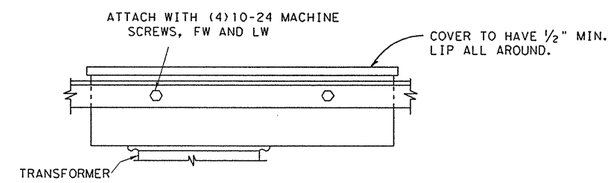

DETAIL "T"
(TERMINAL BOX)

STANDARD PLANS
TEXAS DEPARTMENT OF TRANSPORTATION
Traffic Operations Division

HIGH MAST ILLUMINATION DETAILS

HMID(5)-03

©TxDOT January 1986	DN:-	CK:-	DW:-	CK:-	MSG NO.:

REVISIONS	DISTRICT	FEDERAL AID PROJECT	SHEET
6-87 4-96	AUSTIN		581
11-87	COUNTY	CONTROL-SECT-JOB	HIGHWAY
10-88	WILLIAMSON	0683-06-027	SH 45 LOOP 1
10-93			

766

DISCLAIMER
The use of this standard is governed by the "Texas Engineering Practice Act". No warranty of any kind is made by TxDOT for any purpose whatsoever. TxDOT assumes no responsibility for the conversion of this standard to other formats or for incorrect results or damages resulting from its use.

DN: LR
CK: CW
DW: DN
CK: MT

ED DATE: ACC: d58hplc/usr/d580504
FILE:

LEVELS

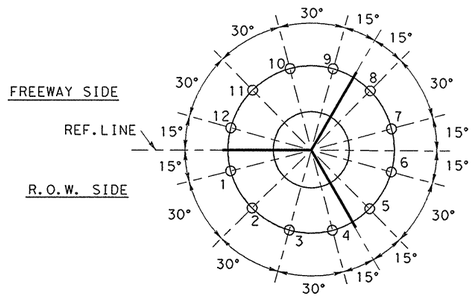

12-LIGHT SETTING

LUMINAIRE LOCATIONS

NOTE: AIRCRAFT OBSTRUCTION LIGHT LOCATIONS NOT SHOWN. THREE ARE REQUIRED LOCATED APPROX. 120° APART. LOCATIONS WILL VARY DEPENDENT ON THE LIGHT SETTING USED.

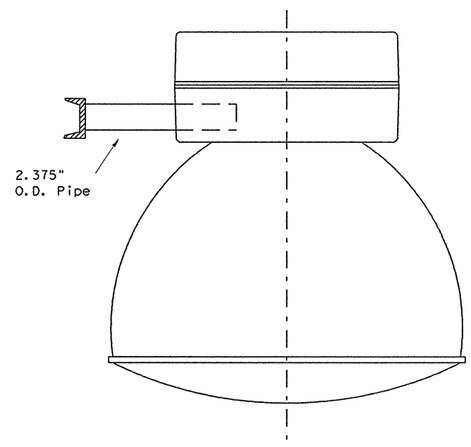

AREALIGHT MOUNTING ASSEMBLY

(SYMMETRIC AND ASYMMETRIC)

NOTES: IF ASYMMETRIC FIXTURES ARE USED, THE REFRACTORS SHALL BE ORIENTED TO PROPERLY ILLUMINATE THE ADJACENT ROADWAYS. ORIENTION SHALL BE AS SHOWN IN PLANS.

NOTE: MIN. SWAGE LENGTH = 2.06
MAX. SWAGE LENGTH = 2.94

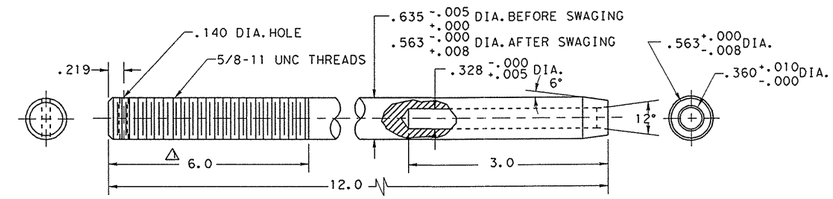

TERMINAL FOR 5/16" WIRE ROPE
MATERIAL: STAINLESS STEEL, TYPE 303SE OR 304
WITH 115,000 P.S.I. MAX. ULTIMATE TENSILE STRENGH.

NOTE: MIN. SWAGE LENGTH = 3.12
MAX. SWAGE LENGTH = 3.44

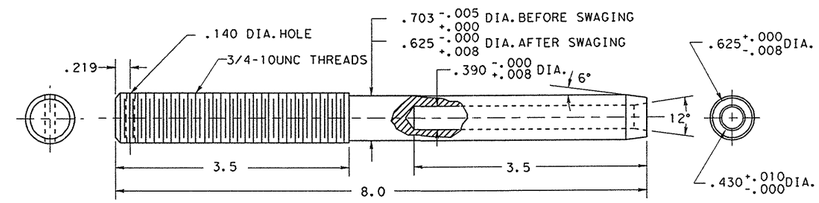

TERMINAL FOR 3/8" WIRE ROPE
MATERIAL: STAINLESS STEEL, TYPE 303SE OR 304
WITH 115,000 P.S.I. MAX. ULTIMATE TENSILE STRENGH.

GENERAL NOTES:

1. AFTER FINAL AIMING HAS BEEN COMPLETED AND APPROVED BY THE ENGINEER, FIXTURES MUST BE LOCKED IN POSITION. CONTRACTOR MUST SUBMIT PROPOSED LOCKING SCHEME WITH THE FIXTURE SUBMITTAL. (FLOODLIGHTS ONLY).

3/03 Revision

1 Removed obsolete diagrams and updated drawings.

STANDARD PLANS
Texas Department of Transportation
Traffic Operations Division

HIGH MAST ILLUMINATION DETAILS

HMID(6)-03

© TxDOT 1986

DNR: GJ	CK: KB	DW: FDN	CK: CAL

10-93
10-95
4-96
3-03

DISTRICT	FEDERAL AID PROJECT	SHEET
AUSTIN		582
COUNTY	CONTROL-SECT-JOB	HIGHWAY
WILLIAMSON	0683-06-027	SH 45 LOOP 1

765

DISCLAIMER
The use of this standard is governed by the "Texas Engineering Practice Act". No warranty of any kind is made by TxDOT for any purpose whatsoever. TxDOT assumes no responsibility for the conversion of this standard to other formats or for incorrect results or damages resulting from its use.

LEVELS 1 2 3 4 5 6 7 8 / 17 18 19 20 21 22 23 24 / 33 34 35 36 37 38 39 40 / 49 50 51 52 53 54 55 56

ID 11 12 13 14 15 16 / 27 28 29 30 31 32 / 42 43 44 45 46 47 48 / 56 57 58 59 60 61 62 63

DATE:
ACC: d58hplc/usr/d580504
FILE:

DN: LR
CK: CW
DW: DN
CK: MT

DISCLAIMER
The use of this standard is governed by the "Texas Engineering Practice Act". No warranty of any kind is made by TxDOT for any purpose whatsoever. TxDOT assumes no responsibility for the conversion of this standard to other formats or for incorrect results or damages resulting from its use.

DISPLAYED

1	2	3	4	5	6	7	8	9	10	11	12	13	14	15	16
1	7	8	9	9	2	0	2	2	4	2	5	2	6	2	7
2	8	9	0	1	3	1	2	3	5	3	6	3	7	3	8
3	3	4	5	3	6	3	7	3	8	3	9	4	0	4	1
4	4	5	6	4	7	4	8	4	9	5	0	5	1	5	2
5	5	6	7	5	8	5	9	6	0	6	1	6	2	6	3

ACC:

1. AREA LIGHTING (Bid under Item 614, "High Mast Illumination Assemblies")

A. Area lighting shall be symmetric or asymmetric, as shown on the descriptive code. The number and wattage of the fixtures on each pole shall be as shown on the lighting layouts. The lighting pattern for symmetric fixtures shall be IES Type V; for asymmetric fixtures, it shall be IES Type II, III, or IV.

B. All luminaires shall be pre-qualified before installation. A sample of each type of luminaire to be considered for pre-qualification shall be submitted to TXDOT's Traffic Operations Division - Traffic Engineering Section (TRF-TE).

Traffic Operations Division - TE
Texas Department of Transportation
125 East 11th Street
Austin, TX 78701-2483

Sample luminaires are non-returnable. A list of pre-qualified luminaires may be obtained by contacting TRF-TE. In addition, luminaires will be sampled and tested in accordance with Item 614. Luminaires that inconsistently pass testing or that are inconsistent with published photometric information will be removed from the pre-qualified list at the discretion of the Engineer. Once a fixture has been approved, no changes shall be made in any material or manufacturing methods without prior approval of the Department. Unapproved changes will result in rejection of all fixtures.

C. Symmetric and Asymmetric fixtures shall meet the following requirements unless otherwise approved by the Engineer:

1. Luminaire Construction

a) The luminaire housing shall be formed, cast or drawn from low copper aluminum and shall be free of cracks and excessive porosity. Formed aluminum shall have a minimum thickness of 0.090, and shall have all seams welded. The minimum thickness of cast parts shall be as approved by the Engineer. Nuts, screws, and washers shall be made of Type 316 stainless steel. The housing shall be marked with minimum 2" letters to indicate the photometric type as being either A, B, C, or S as specified. Marking shall be permanent and shall be by stencil or stick on labels similar to "wattage" label on cobra heads. Wattage label will not be required on high mast fixtures. The fixture housing shall be constructed separate from the fixture reflector.

b) Fixtures shall be natural aluminum in color or shall be painted gray.

c) The slipfitter shall securely attach the luminaire to the tenon on the ring assembly with a minimum of 2 bolts and clamp. A positive means of vertical adjustment shall be provided.

d) For optical assemblies with lenses, reflectors shall be polished aluminum with Alzak or equal coating and shall not be painted. The optic assembly shall be sealed. The lens shall be tempered glass or prismatic glass, either flat or sag. The optic assembly shall be provided with a resilient seamless or sonically welded silicone rubber gasket, and constructed so that a positive seal against weather and other contaminants will be maintained. The latches shall be stainless steel, spring loaded, and hand operated (2 latches minimum, 3 attachment points),and shall provide a positive means of maintaining closure of the luminaire.

e) For optical assemblies without lenses, optical assembly shall consist of an open ventilated borosilicate glass reflector. The reflecting prisms shall be protected from dirt depreciation by a spun on hermetically sealed aluminum cover. There shall be no glass lens/refractor on this optical assembly.

f) Asymmetric fixtures shall have field rotatable optics with accurate degree of rotation markings. Reflector shall have "house side" and "street side" markings.

g) The socket shell shall be nickel plated and shall be rigidly attached to a high grade porcelain mogul base, which shall extend and enclose the metal shell. A locking means shall be incorporated in the shell of the socket to positively resist the removal of the lamp. This locking means shall be a spring loaded center tip. Lamp socket shall be non-adjustable and shall be riveted, welded, or otherwise permanently installed. Lamps shall be held securely in the proper position with a lamp support.

h) The terminal block shall use nickel plated brass connectors.

i) Fixture weight including ballast shall not exceed 80 pounds, and effective projected area (EPA) shall not exceed 2.62 square feet.

j) The Contractor may be responsible for fixture testing costs. See TXDOT's "Manual of Testing Procedures," Chapter 11 - "Traffic Systems and Illumination," TEX-1110-T - "Sampling Lighting Assemblies," at http://manuals.dot.state.tx.us/dynaweb/.

2. Photometrics

a) The Contractor shall submit a computer generated light level array of the area to be lighted by high mast poles. All computer generated arrays shall have 400 watt fixtures derated to 40,000 lumens per lamp.

b) The Type "A" 400 watt asymmetric fixture shall be IES cutoff. The Department will use the measured photometric data of sampled fixtures to run the following tests on a computer simulation:

(1) When mounted in the level position, 50 ft. above the midpoint and 20 ft outside of either long side of a rectangular area measuring 340 ft. by 50 ft., the fixture shall pass the following tests:

(a) The fixture shall provide a measured minimum intensity of 0.15 horizontal foot-candles at any point on the surface of this area.

(b) The fixture shall provide a measured maximum to minimum light ratio, based on horizontal foot-candles, of less than 25.

(c) The fixture shall provide an average measured intensity of 0.6 horizontal foot-candles on the surface area.

(2) When mounted in the level position, 50 ft. above the midpoint and 20 ft outside of either long side of a rectangular area measuring 260 ft. by 30 ft., the fixture shall provide a measured minimum intensity of 0.30 horizontal foot-candles at any point on the surface of this area.

c) The Type "B" 400 watt asymmetric fixture shall be IES cutoff. The Department will use the measured photometric data of sampled fixtures to run the following tests on a computer simulation:

(1) When mounted in the level position, 50 ft. above the midpoint and 20 ft outside of either long side of a rectangular area measuring 260 ft. by 65 ft., the fixture shall pass the following tests:

(a) The fixture shall provide a measured minimum intensity of 0.15 horizontal foot-candles at any point on the surface of this area.

(b) The fixture shall provide a measured maximum to minimum light ratio, based on horizontal foot-candles, of less than 25.

(c) The fixture shall provide an average measured intensity of 0.6 horizontal foot-candles on the surface area.

(2) When mounted in the level position, 50 ft. above the midpoint and 20 ft outside of either long side of a rectangular area measuring 200 ft. by 40 ft., the fixture shall provide a measured minimum intensity of 0.30 horizontal foot-candles at any point on the surface of this area.

d) The Type "C" 400 watt asymmetric fixture shall be IES cutoff. The Department will use the measured photometric data of sampled fixtures to run the following tests on a computer simulation:

(1) When mounted in the level position, 50 ft. above the midpoint and 20 ft. outside of either long side of a rectangular area measuring 220 ft. by 80 ft., the fixture shall pass the following tests:

(a) The fixture shall provide a measured minimum intensity of 0.15 horizontal foot-candles at any point on the surface of this area.

(b) The fixture shall provide a measured maximum to minimum light ratio, based on horizontal foot-candles, of less than 25.

(c) The fixture shall provide an average measured intensity of 0.6 horizontal foot-candles on the surface area.

(2) When mounted in the level position, 50 ft. above the midpoint and 20 ft. outside of either long side of a rectangular area measuring 160 ft. by 50 ft., the fixture shall provide a measured minimum intensity of 0.30 horizontal foot-candles at any point on the surface of this area.

e) The Type "S" 400 watt Symmetric fixture shall be IES cutoff. The Department will use the measured photometric data of sampled fixtures to run the following tests on a computer simulation:

(1) When mounted in the level position at 50 foot mounting height, the fixture shall provide the minimum light levels as shown below:

(a) 0.15 horizontal foot-candles within a 130 foot radius.

(b) 0.30 horizontal foot-candles within a 100 foot radius.

(c) 0.50 horizontal foot-candles within a 60 foot radius.

3. Ballasts

a) All ballasts shall be isolated-winding lag-type magnetic regulators designed to operate 400 watt high pressure sodium lamps rated 480 volts. Ballasts shall be capable of starting lamps at an ambient temperature of -20 degrees F. Ballast wiring shall include a grounding terminal bonded to metal housing. Ballasts shall be fused with a 5 amp time-delay fuse in an insulated fuse holder. Fuse holders shall be internal to the housing. Ballast wiring to the terminal board shall be through a quick-disconnect plug. Windings shall be made from copper wire.

b) When the circuit voltage indicated on the plans is applied, the ballast input wattage during fluctuations of the test voltage of +10% and -10% shall not exceed 552 watts for a 400 watt HPS lamp.

3/03 Revision

1 Revised Area Lighting Requirements

STANDARD PLANS
Texas Department of Transportation
Traffic Operations Division

HIGH MAST ILLUMINATION DETAILS

HMID(7)-03

© TxDOT 1986	DN: GJ	CK: KB	DN: FDN	CK: CAL

9-91 10-93 4-96 3-03	DISTRICT	FEDERAL AID PROJECT	SHEET
	AUSTIN		583
	COUNTY	CONTROL-SECT-JOB	HIGHWAY
	WILLIAMSON	0683-06-027	SH 95 LOOP 1

766

DISCLAIMER
The use of this standard is governed by the "Texas Engineering Practice Act". No warranty of any kind is made by TxDOT for any purpose whatsoever. TxDOT assumes no responsibility for the conversion of this standard to other formats or for incorrect results or damages resulting from its use.

c) During fluctuation of the line voltage of +10% or -10%, the lamp wattage fluctuation shall not exceed a total of 20%. Ballast shall maintain lamp wattage between 280 and 475 watts for a 400 watt HPS lamp.

d) The power factor of any ballast when tested at the circuit voltage indicated in the plans shall not be less than 90% at any point in life. Ballast factor shall be between .95 and 1.0.

e) The electronic starting aid shall provide a starting pulse with an amplitude of 2500 volts minimum, 4000 volts maximum. The pulse width shall be a minimum of 0.8 microseconds at 2250 volts. The pulse shall occur when the open-circuit voltage is equal to or greater than 90 percent of peak open-circuit voltage. Pulse repetition rate shall be a minimum of one per cycle and pulse current shall be a minimum of 0.18 amperes. Electronic starting aids shall be replaceable without the use of tools. The starting aid shall discontinue to pulse when the lamp starts. Starter shall sense an inoperative or missing HPS lamp and automatically shut down luminaire to protect ballast after 10 minutes.

f) Ballasts shall permanently and clearly indicate the following: lamp type, catalog number, voltage rating, connection diagram, and manufacturer. Capacitors in all luminaires shall be non-PCB type.

4. Lamps

a) All lamps shall be new and of recent manufacture.

b) Lamps shall be high pressure sodium and shall meet ANSI C78 requirements. Lamps shall be the type that extinguish at the end of usable lamp life and remain extinguished without cycling. 400 watt lamps shall contain less than 4.0 mg of mercury. Lamps shall be lead free and shall pass the Federal Toxic Characteristic Leachate Procedure (TCLP). Lamp shall be Osram-Sylvania LU400/Eco Plus. No alternatives will be approved.

c) 400 watt high pressure sodium lamps shall have average initial lumens of 50000 and average rated life of 24000 hours.

2. GENERAL

A. All material shall be in accordance with the applicable sections of the NEC. All conduit and conductors shall be in accordance with the materials and construction methods requirements of Items 618 and 620. Heat shrink tubing for use with cable grips and cable splicing shall meet the requirements of Item 620.

B. Where stainless steel bands are called for on the HMID sheets, stainless steel hose clamps may be provided. Stainless steel bands and stainless steel hose clamps shall be provided with stainless steel clips or stainless steel screws.

C. Obstruction Lights

1. When obstruction lights are required by layout sheets, summary sheets or general notes, the entire high mast assembly shall be controlled by an FAA approved photocell mounted inside the service enclosure. Ring mounted luminaires shall be controlled by up to 4 additional ring mounted photocells, with each photocell controlling up to 3 fixtures. Photocells shall meet the following requirements:

a) All photocells shall consist of a photoelectric cell, an internal lightning arrestor, and a relay or bimetallic switch mounted inside a weather proof enclosure with standard 3-prong twist lock photocell plug and receptacle. The enclosure shall be made of poly-acrylic with clear acrylic window. Enclosure chassis shall be molded thermosetting plastic. The photocell shall have an arrestor rated 2.0kV sparkover with 5000 amps follow-through. Relay or switch shall be time delay type with normally closed contacts. Photocell shall be rated a minimum of 1800 VA.

b) Service enclosure mounted photocell (FAA photocell) shall turn on at light levels below 35 foot-candles and off at levels above 58 foot-candles, in accordance with FAA requirements. This photocell shall be rated for operation at 240 volts. A permanent placard shall be installed on the inside of the service enclosure door to indicate that an FAA approved photocell is required.

c) High mast assembly ring mounted photocells (one foot-candle photocells) shall turn on at light levels below 1.0 (plus or minus 0.5) foot-candle, and shall turn off at 2 foot-candles higher than this level. These photocells shall be rated for operation at 480 volts. Photocells shall be mounted upright on the terminal box or on various junction boxes around the ring as approved by the Engineer. Conduit entries shall not be made into the top of the terminal box or junction boxes. The Contractor shall submit mounting details to the Engineer for approval.

2. When obstruction lights are not required, eliminate the 3 obstruction light fixtures, 3 mounting posts, 480/120 volt transformer, 120 volt wiring, and 3 mounting post support connections shown on detail "E", sheet 1.

D. The male cord connector on the lower end of the Type W cord running up the pole, the female cord connector for the Type W cord running to the circuit breaker enclosure and the male connector on the maintenance jumper shall meet the following or approved equal specifications:

1. Arrow Hart pin and sleeve watertight connectors UL listed, catalog numbers AH330C7W and AH330P6W.

2. Bryant watertight pin and sleeve connectors UL listed, catalog numbers 330C6W and 330P6W.

3. Hubble pin and sleeve connectors UL listed, catalog numbers HBL330C7W and HBL 330P7W.

4. The male connector for use with the Type W maintenance jumper shall be a pin and sleeve connector of one of the above types. The Contractor shall attach a 50 amp twist lock receptacle to the opposite end of the maintenance jumper to match the flange mounted plug on the ring and the portable transformer.

5. The Contractor shall make a brochure submittal on the cord connectors.

E. When shown on the plans, spill light shall be restricted to less than 0.15 horizontal footcandles.

F. The Contractor shall provide shop drawings for high mast illumination assemblies in accordance with this Item and Item 441. An Engineer licensed in the State of Texas shall seal the shop drawings.

3. TESTING

A. Fixtures, lamps and ballasts will be sampled and tested in accordance with the Department "Manual of Testing Procedures" except as noted in these specifications.

B. Ballasts and fixtures will be tested using a reference lamp.

C. The Department will bear the cost of all testing of equipment that complies with the specification requirements. However, the source of supply of fixtures and ballasts must be approved as required in Article 6.1 of the Standard Specifications. Such approval will be contingent on the supplier agreeing to bear the cost of testing any equipment that fails to comply with the specification requirements listed in this specification.

D. All other equipment will be tested in accordance with Item 614 of the Standard Specifications and Materials and Test Division Test Standards.

E. After High Mast Assembly has been completely assembled, the Engineer may require Contractor to fully lower and raise each high mast ring one time to demonstrate proper operation of the lowering mechanism, or may require the ring to be lowered for ring or fixture inspection. If any malfunction occurs, the problem shall be corrected at the Contractor's expense and the lowering test will be repeated.

4. MOUNTING RING AND SUPPORT ASSEMBLY

A. Ring and support assembly shall be fabricated from steel having a minimum yield strength of 36 KSI.

B. Cover assemblies, fittings and miscellaneous parts shall be as outlined on the plans.

C. All hardware shall be hot-dipped galvanized per ASTM A153 or shall be stainless steel, unless noted otherwise on the plans.

5. WINCH

A. Housing shall be high tensile strength die-cast silicon aluminum. Cable drum shall be fabricated from seamless steel tubing with stamped steel flanges and shall be hot-dipped galvanized. Drum shall have a minimum diameter of 4.5 inches. Drum shall be keyed to drum shaft. Drum and flanges shall be sized so that, when the fixture mounting ring is in the raised position, the cable including one full layer will fill the drum to no more than two-thirds of full capacity. Drum shaft shall be ground from stainless steel and mounted on lubricated bronze bearings with seals. Wormgear shall be made of nickel-bronze and worm shaft shall be high-strength stress-proofed steel, ground and polished and supported by tapered roller bearings.

B. Gear ratio shall be 36:1 with safe hoisting capacity of not less than 4000 pounds.

C. Winch shall incorporate adjustable automatic brake to assure positive load suspension. Brake shall be multiple disc with friction plates running in oil bath and one-direction clutch which operates only when load is suspended or lowered. Winch shall not have throw-out clutch.

D. Any winch that is operated without oil shall be considered damaged and shall be replace by the contractor at the contractor's expense.

⚠2 6. WIRE ROPE AND TERMINALS

A. 5/16 and 3/8 wire rope shall be 19x7 Rotation Resistant IWRC stainless steel. 19x7 rotation resistant wire rope shall meet the construction requirements of Fed. Spec. RR-W-410D, Type IV, class 2, modified for stainless steel with a nominal breaking strength of 11,100 lbs. All wire rope shall be pre-formed and factory lubricated. Wire rope shall meet the requirements of the applicable specification except where modified by this specification. Quality Assurance testing shall be the responsibility of the manufacturer and shall meet recognized wire rope industry standards. No special tensile or torsion testing will be required. Mill Test Reports shall be furnished.

B. Winch cable shall be of sufficient length to leave a minimum of one full layer of cable on the drum when the fixture mounting ring is in the full down position.

C. Wire rope terminals shall be stainless steel, solid stud type as shown on Sheet 7. All terminals shall be drilled for cotter pin. Material to be 303 SE or 304 stainless steel with a maximum tensile strength of 115,000 p.s.i. Mill Test Reports shall be furnished.

⚠1

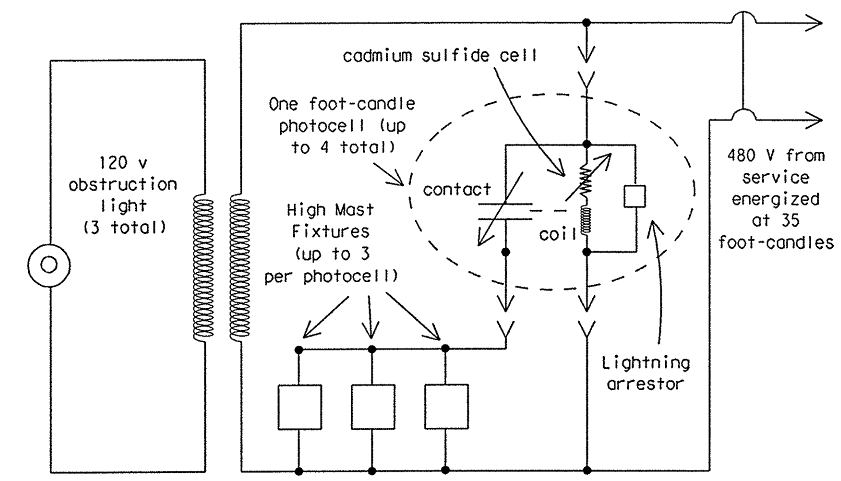

One foot-candle photocell keeps High Mast fixtures off when FAA photocell energizes circuit at 35 foot-candles. Fixtures come on when sun goes down at 1 foot-candle.

One Foot-candle Photocell Schematic

Use on ring when obstruction lights are installed and FAA photocell is installed in electrical service.

3/03 Revision

⚠1 Revised General requirements; add diagram

⚠2 Revised Wire Rope and Terminals

STANDARD PLANS
Texas Department of Transportation
Traffic Operations Division

HIGH MAST ILLUMINATION DETAILS

HMID(8)-03

©TxDOT 1986	DN:-GJ	CK:-KB	DW:-FDN	CK:-CAL

Revisions	DISTRICT	FEDERAL AID PROJECT		SHEET
4-89 10-93 4-96 3-03	AUSTIN			584
	COUNTY		CONTROL-SECT-JOB	HIGHWAY
	WILLIAMSON		0683-06-027	SH 45 LOOP 1

76H

DISCLAIMER
The use of this standard is governed by the "Texas Engineering Practice Act". No warranty of any kind is made by TxDOT for any purpose whatsoever. TxDOT assumes no responsibility for the conversion of this standard to other formats or for incorrect results or damages resulting from its use.

D. All terminals shall be proof-tested by the manufacturer to 40% of rated strength of the wire rope. Each terminal shall be identified by manufacturer's logo permanently incised on terminal. Manufacturer shall furnish certification of tests. Contractor shall also furnish one sample of each size of terminal with 5 ft. of wire rope for load tests by the State. Samples tested must withstand test load not less than 100% of rated breaking strength of wire rope. If sample fails test, all terminals of same size will be rejected.

E. Wire rope shall be delivered from the manufacturer on a reel.

7. SPRINGS

A. Provide three steel springs as shown on plans.

B. Springs shall have an uncompressed length of approximately 8 inches and shall compress 3 inches under 700-pound load.

C. Springs shall contain approximately 19 total coils with ID of 0.875 and OD of 1.375 inches. Ends shall be closed and ground. Springs shall be zinc-plated.

D. Springs shall be made from 1/4" diameter oil-tempered MB Steel treated for overstress. Springs shall not develop permanent set from 3-inch compression.

8. ELECTRICAL POWER CABLE

A. Power cable shall be No. 8 AWG three-conductor round Type W, rated 90 degrees C, 600 volt or 2000 volt. Each conductor shall be tinned copper and shall consist of 133 strands. Insulation shall be ethylene propylene rubber. Jacket shall be chlorosulfonated polyethylene (CSPE), with glass fiber or nylon reinforcing mesh between two layers of CSPE. Nominal diameter shall be 0.91". Filler shall be rubber compound or other approved non-hygroscopic compound. Jacket shall be Hypalon Power Flex 90, with no substitutions allowed.

9. POWER DRIVE ASSEMBLY (ONE ONLY THIS CONTRACT UNLESS OTHERWISE SHOWN ELSEWHERE ON THE PLANS)

A. Drive Motor

1. Drive motor shall be 1-1/4" heavy-duty reversible portable electric drill modified as shown on plans.

2. Shall have a minimum of 6 radial ball bearings, one thrust bearing, and one needle bearing.

3. Shall have No. 3 Morse Taper socket.

4. Shall be designed for 115 volt 60 Hertz single phase operation 250 RPM at no load.

5. Shall be designed for continuous rated duty of 160 RPM and 15 amperes at 115 volts with delivery of 33-pound-feet of torque. Drill motor to be operated only at low speed range. (i.e. 150 to 160 RPM)

6. Shall develop 240 pound-feet of torque at stalled rotor condition.

B. Torque Limiter Coupling

1. Torque limiter coupling shall consist of standard torque limiter with Type A sprocket center member coupled to a Type B sprocket by an ASA double strand roller chain. Type A sprocket shall be chrome-plated.

2. Coupling shall have torque capacity minimum of 15 pound-feet and a maximum of 55 pound-feet.

3. Limiter section of coupling shall consist of integral hub and pressure plate, two friction facings, sintered iron bushing, pilot plate, disk spring, lock washer and hex adjustment nut. All major components except spring and friction facings shall be cadmium-plated with dichromate treatment.

4. Type A center sprocket shall have ground face (63 micro-inch) and shall be run-in for 4 minutes at approximately 60 RPM at a torque setting 70% to 80% of spring rating. Contractor shall provide written certification that run-in has been accomplished.

5. The torque limiter coupling shall, after run-in, be set to a torque limit of 35 pound-feet or as directed by the Engineer. The proper setting of the coupling shall be demonstrated to the Engineer.

C. Universal Joints

1. Shall be slip-type with 4-inch barrel. A grease fitting shall be so located in the spider that all caps and needle bearings may be adequately serviced. The assembly shall be disassembled and zinc-plated, then reassembled and properly lubricated.

2. Shall have a minimum torque rating of 1270 inch-pounds at 200 RPM.

3. Shall have set screw and keyed coupling as shown on plans.

1 10. CONSTRUCTION METHODS

A. Fabrication

1. Fabrication and welding shall be in accordance with Item 441, "Steel Structures".

2. All holes supporting pulley shafts shall be drilled (not punched) prior to galvanizing.

3. All component parts shall be galvanized where galvanizing is applicable, after fabrication.

4. Galvanizing on all parts which have become scratched, chipped or otherwise damaged shall be thoroughly cleaned and the cleaned area painted with two coats of zinc dust-zinc oxide paint conforming to the requirements of repair compounds meeting Federal Specification TT-P-641 b.

5. Mounting rings and ring support assemblies shall be fabricated with the use of jigs that have been inspected and approved by Material and Test Division personnel prior to their usage.

6. The fabricator shall submit his proposed welding procedures in accordance with Item 441, "Steel Structures".

B. Installing Wire Rope

1. Extreme care shall be used to prevent wire rope from kinking, nicking, or from sustaining other damage during installation. Rope shall not be installed by pulling from flat coil, but shall be carefully unrolled its full length or placed on a horizontal axis and unreeled according to wire rope industry standards.

2. For right lay rope, the rope shall be attached to the drum on the end opposite the winch gear train, and wound on drum so that the free end of the rope comes off the backside of the drum during normal operation of the winch. Rope must be unreeled carefully as stated above. Care must be taken to insure that all layers lay full and tight on drum.

3. Installation of all wire rope shall be accomplished only under direct supervision of the Engineer or his authorized representative. Contractor shall not remove wire rope from manufacturer's reel until authorized by the Engineer. Installation of wire rope on winch shall be in accordance with the above and accepted industry practice. Installation of the three hoist cables shall be made from the top end of the pole and as directed by the Engineer or his representative.

C. Installing Wire Rope Clips

1. Turn back approx. 2' 3" of rope, measured from the top of thimble. Apply seizing to pigtail end of wire rope prior to cutting to length. See detail "K", Sheet 3. Apply first clip approx. 3" from the dead end of the wire rope with U-bolt over dead end and live end in clip saddle. Tighten nuts evenly to 30 pound-feet of torque, or as recommended by manufacturer.

2. Install second clip as near loop as possible, take out slack and torque nuts evenly to 30 pound-feet or as recommended by manufacturer.

3. After final erection and assembly of the pole and high mast assembly, retighten nuts to required torque.

D. Installing Light Ring and Luminaires

1. Prior to mounting luminaires to the light ring, Contractor shall ensure the ring is level. Luminaires shall be mounted level on the light ring. Luminaires shall be oriented as shown on plans.

1 3/03 Revision

Revised Construction Methods.

STANDARD PLANS
Texas Department of Transportation
Traffic Operations Division

HIGH MAST ILLUMINATION DETAILS

HMID(9)-03

©TxDOT 1986	DN: GJ	CK: KB	DW: FDN	CK: CAL

	DISTRICT	FEDERAL AID PROJECT	SHEET
10-93 10-95 4-96 3-03	AUSTIN		585
	COUNTY	CONTROL-SECT-JOB	HIGHWAY
	WILLIAMSON	0683-06-027	SH 95, LOOP 1

DISPLAYED
1 2 3 4 5
6 7 8 9 10 11 12 13 14 15 16
17 18 19 20 21 22 23 24 25 26 27 28 29 30 31 32
33 34 35 36 37 38 39 40 41 42 43 44 45 46 47 48
49 50 51 52 53 54 55 56 57 58 59 60 61 62 63

ACC:

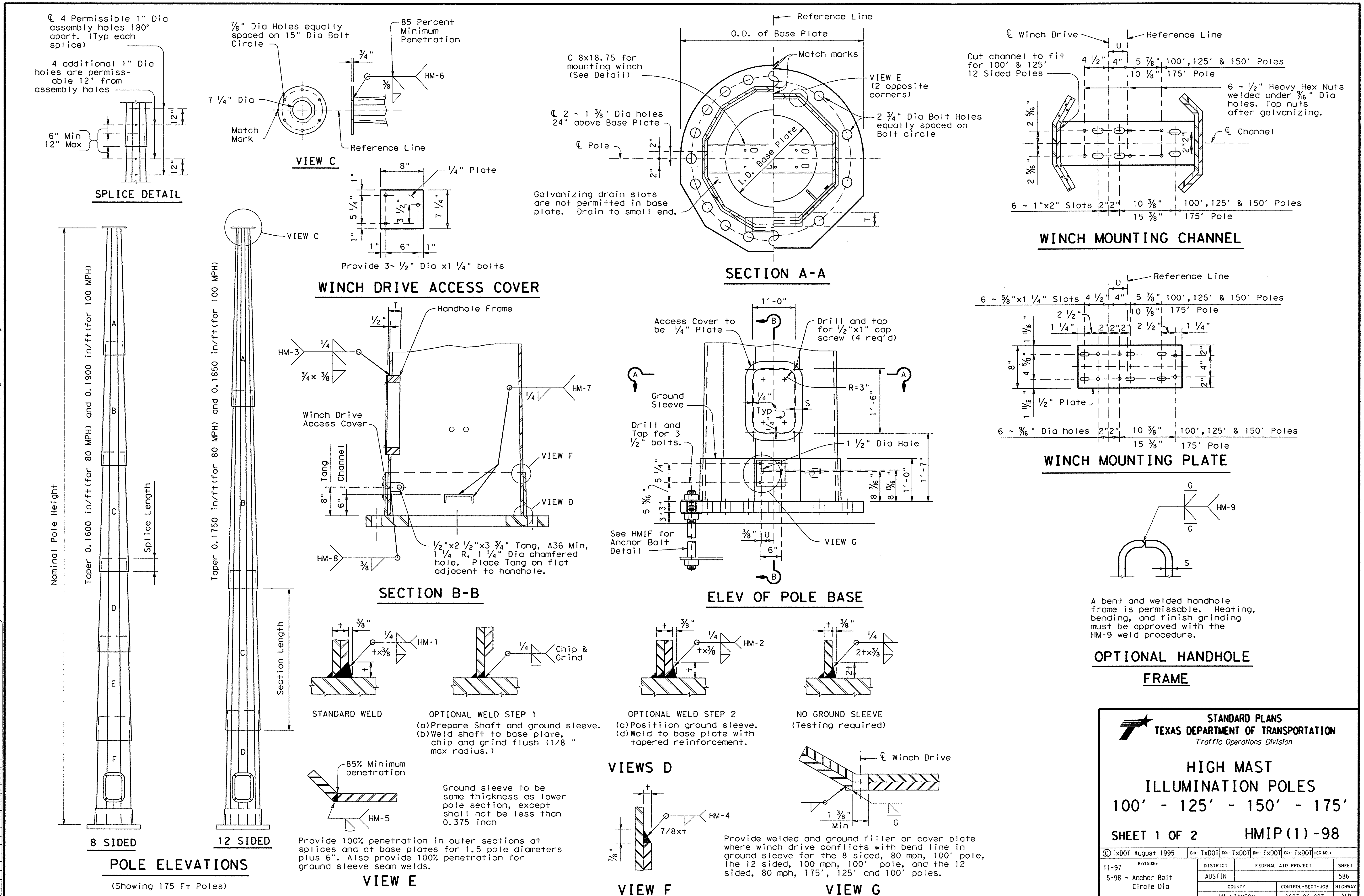

DISCLAIMER:
The use of this standard is governed by the "Texas Engineering Practice Act". No warranty of any kind is made by TxDOT for any purpose whatsoever. TxDOT assumes no responsibility for the conversion of this standard to other formats or for incorrect results or damages resulting from its use.

LEVELS																ACC:
1	2	3	4	5	6	7	8	9	10	11	12	13	14	15	16	
17	18	19	20	21	22	23	24	25	26	27	28	29	30	31	32	(LV=1,2 for English; 1,3 for Metric)
33	34	35	36	37	38	39	40	41	42	43	44	45	46	47	48	
49	50	51	52	53	54	55	56	57	58	59	60	61	62	63		

STANDARD PLANS
TEXAS DEPARTMENT OF TRANSPORTATION
Traffic Operations Division

HIGH MAST ILLUMINATION POLES 100' - 125' - 150' - 175'

SHEET 1 OF 2 HMIP(1)-98

© TxDOT August 1995 DN:- TxDOT CK:- TxDOT DW:- TxDOT CK:- TxDOT NEG NO.:

REVISIONS	DISTRICT	FEDERAL AID PROJECT	SHEET
11-97	AUSTIN		586
5-98 ~ Anchor Bolt Circle Dia	COUNTY	CONTROL-SECT-JOB	HIGHWAY
	WILLIAMSON	0683-06-027	SH 45 LOOP 1

TABLE OF VARIABLE POLE DIMENSIONS

	Ht (ft)	Section	8 SIDED POLE Diameter (Inches) Bottom	8 SIDED POLE Diameter (Inches) Top	8 SIDED POLE Thickness (inches)	8 SIDED POLE Length (feet)	8 SIDED POLE Splice (inches)	12 SIDED POLE Diameter (Inches) Bottom	12 SIDED POLE Diameter (Inches) Top	12 SIDED POLE Thickness (inches)	12 SIDED POLE Length (feet)	12 SIDED POLE Splice (inches)
80 MPH DESIGNS	175	A	13.083	7.750	.250	33.33	19	16.792	7.750	.250	51.67	24
		B	17.792	12.205	.375	34.92	25	24.858	15.817	.313	51.67	36
		C	22.250	16.583	.375	35.42	32	32.625	23.583	.313	51.67	48
		D	25.375	20.948	.438	27.67	36	36.250	31.175	.375	29.00	~
		E	28.375	23.895	.500	28.00	41					
		F	31.250	26.703	.500	28.42	~					
	150	A	13.083	7.750	.250	33.33	19	16.792	7.750	.250	51.67	24
		B	17.792	12.205	.375	34.92	25	24.858	15.817	.313	51.67	36
		C	22.250	16.583	.375	35.42	32	32.625	23.583	.313	51.67	~
		D	25.375	20.948	.438	27.67	36					
		E	28.375	23.895	.500	28.00	~					
	125	A	13.083	7.750	.250	33.33	19	16.792	7.750	.250	51.67	24
		B	17.792	12.205	.375	34.92	25	24.858	15.817	.313	51.67	36
		C	22.250	16.583	.375	35.67	32	28.250	23.583	.313	26.67	~
		D	25.375	20.948	.438	27.67	~					
	100	A	13.083	7.750	.250	33.33	19	16.792	7.750	.250	51.67	24
		B	17.792	12.205	.375	34.67	25	24.625	15.817	.313	50.33	~
		C	22.250	16.583	.375	35.67	~					
100 MPH DESIGNS	175	A	14.208	7.875	.313	33.33	20	17.433	7.875	.375	51.67	25
		B	19.792	13.142	.375	35.00	28	25.747	16.173	.438	51.75	37
		C	25.250	18.473	.438	35.67	36	33.750	24.176	.438	51.75	49
		D	29.000	23.680	.500	28.00	42	37.375	31.995	.500	29.08	~
		E	32.625	27.210	.563	28.50	47					
		F	36.125	30.631	.563	28.92	~					
	150	A	14.208	7.875	.313	33.33	20	17.433	7.875	.375	51.67	25
		B	19.792	13.142	.375	35.00	28	25.747	16.173	.438	51.75	37
		C	25.250	18.473	.438	35.67	36	33.750	24.176	.438	51.75	~
		D	29.00	23.680	.500	28.00	42					
		E	32.625	27.210	.563	28.50	~					
	125	A	14.208	7.785	.313	33.33	20	17.433	7.875	.375	51.67	25
		B	19.792	13.142	.375	35.00	28	25.747	16.173	.438	51.75	37
		C	25.250	18.473	.438	35.67	36	29.125	24.176	.438	26.75	~
		D	29.00	23.680	.500	28.00	~					
	100	A	14.208	7,875	.313	33.33	20	17.433	7.875	.375	51.67	25
		B	19.792	13.142	.375	35.00	28	25.500	16.173	.375	50.42	~
		C	25.250	18.473	.438	35.67	~					

Diameters are measured across the flats.

TABLE OF VARIABLE BASE DIMENSIONS

	Ht (ft)	O.D. (inches)	I.D. (inches)	Bolt Cir (inches)	No. Bolts	S (inches)	T (inches)	U (inches)
	8 SIDED POLE							
80 MPH DESIGNS	175'	47	22	41	16	2.00	3.75	4.50
	150'	44	18	38	12	2.00	4.00	3.50
	125'	41	16	35	8	2.00	4.50	3.50
	100'	37	14	31	6	2.00	5.00	3.50
	12 SIDED POLE							
	175'	50	24	44	12	1.75	3.50	3.50
	150'	47	22	41	10	1.75	3.50	2.50
	125'	42	18	36	8	1.75	3.75	2.50
	100'	38	13	32	6	1.75	4.00	2.50
	8 SIDED POLE							
100 MPH DESIGNS	175'	52	27	46	20	1.75	3.50	4.50
	150'	49	23	43	16	1.75	4.00	3.50
	125'	45	21	39	12	1.75	4.50	3.50
	100'	40	17	34	10	1.75	4.50	3.50
	12 SIDED POLE							
	175'	52	27	46	16	1.75	3.25	3.50
	150'	50	25	44	12	1.75	3.50	2.50
	125'	46	22	40	10	1.75	3.75	2.50
	100'	42	19	36	6	1.75	4.00	2.50

NOTE: Base Plate may be round or with 8 or 12 equal segments matching the pole.

GENERAL NOTES:

Design conforms to AASHTO Standard Specifications for Structural Supports for Highway Signs, Luminaries, and Traffic Signals and Interim Revisions thereto. The Design Wind Speed is 80 mph or 100 mph.

The required design height and wind speed shall be as shown elsewhere in the plans.

Each pole section, top flange plate and base plate shall be permanently marked on the reference line. The required mark locations are shown on the baseplate, top plate, and foundation plan details. These marks shall be used in pole assembly and erection alignment. The reference line and anchor bolt orientation shall be parallel to roadway centerline unless otherwise shown on Lighting Layouts.

DISCLAIMER:
The use of this standard is governed by the "Texas Engineering Practice Act". The warranty, if any, is exclusive and in lieu of all others. TxDOT assumes no responsibility for the conversion of this standard to other formats or for incorrect results or damages resulting from its use.

LEVELS 1 2 3 4 5 6 7 8 9 10 11 12 13 14 15 16 17 18 19 20 21 22 23 24 25 26 27 28 29 30 31 32 33 34 35 36 37 38 39 40 41 42 43 44 45 46 47 48 49 50 51 52 53 54 55 56 57 58 59 60 61 62 63

ACC:

(LV=1,2 for English; 1,3 for Metric)

STANDARD PLANS
TEXAS DEPARTMENT OF TRANSPORTATION
Traffic Operations Division

HIGH MAST ILLUMINATION POLES 100' - 125' - 150' - 175'

SHEET 2 OF 2 HMIP(2)-98

© TxDOT August 1995

DWN: TxDOT CKD: TxDOT DWN: TxDOT CKD: TxDOT MSG NO.:

REVISIONS
5-98 ~ Anchor Bolt Circle Dia

DISTRICT	FEDERAL AID PROJECT	SHEET
AUSTIN		587

COUNTY	CONTROL-SECT-JOB	HIGHWAY
WILLIAMSON	0683-06-027	SH 45 LOOP 1

77B

DISCLAIMER:
This standard is governed by the "Texas Engineering Practice Act". The use of this standard is made by TxDOT for any purpose whatsoever. TxDOT assumes no responsibility for the conversion of this standard to other formats or for incorrect results or damages resulting from its use.

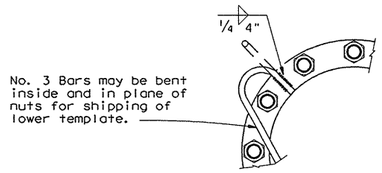

VIEW F

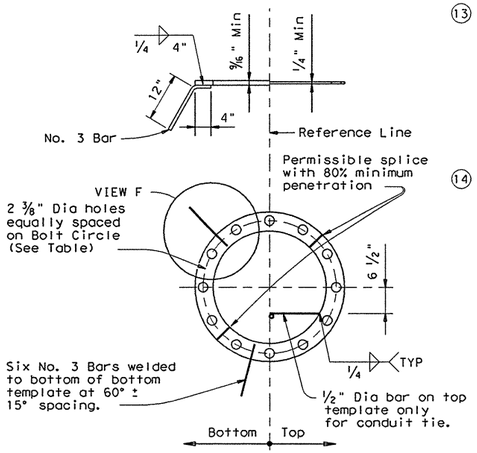

ANCHOR BOLT TEMPLATES

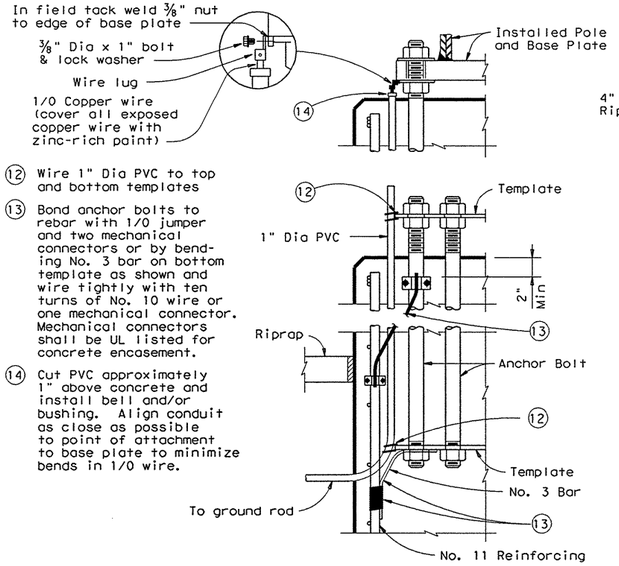

(12) Wire 1" Dia PVC to top and bottom templates

(13) Bond anchor bolts to rebar with 1/0 jumper and two mechanical connectors or by bending No. 3 bar on bottom template as shown and wire tightly with ten turns of No. 10 wire or one mechanical connector. Mechanical connectors shall be UL listed for concrete encasement.

(14) Cut PVC approximately 1" above concrete and install bell and/or bushing. Align conduit as close as possible to point of attachment to base plate to minimize bends in 1/0 wire.

LIGHTNING PROTECTION SYSTEM

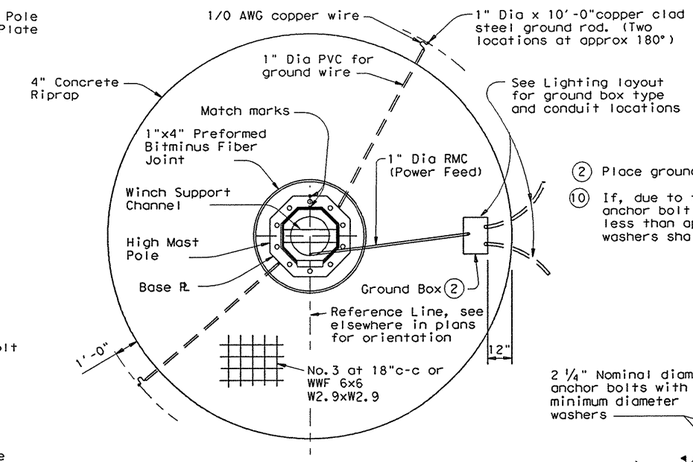

(2) Place ground box cover flush with riprap.

(10) If, due to tolerances in fabrication, the anchor bolt hole to ground sleeve weld is less than approx 7/8", clipped 1/2" thick washers shall be supplied at those

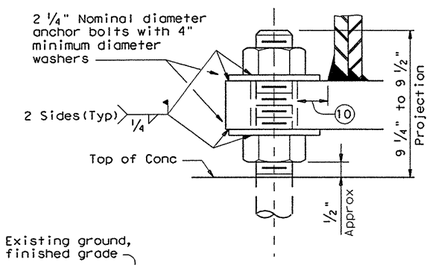

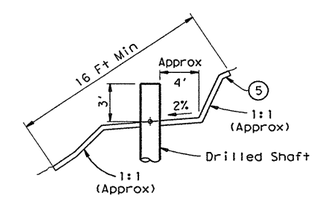

RIPRAP ON SLOPES

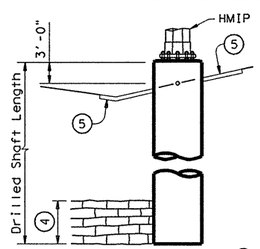

(5) Match slope of finished ground if slope is less than approx 4 to 1. For steeper slopes, bench to provide work area with approx 2 % slope around pole base. Other configurations may be shown elsewhere on the plans.

(4) If rock is encountered, the Drilled Shaft shall extend a minimum of two diameters into solid rock.

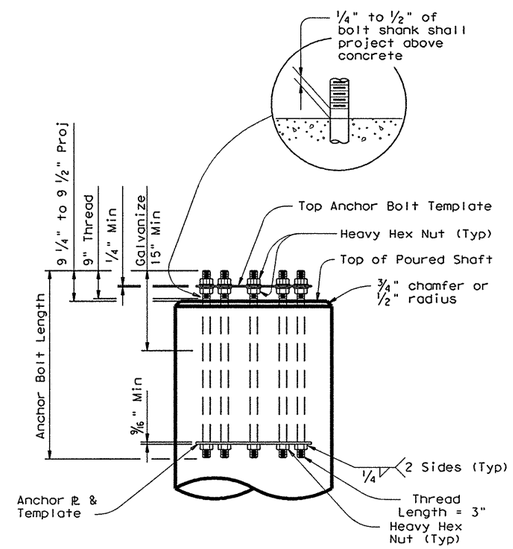

ANCHOR BOLT ASSEMBLY

(See Anchor Bolt Table for number of bolts required)

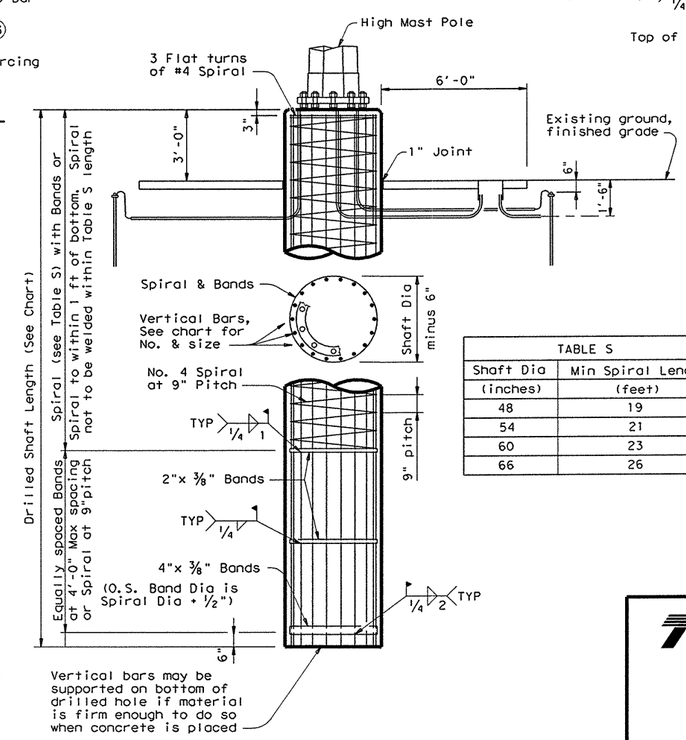

TABLE S	
Shaft Dia (inches)	Min Spiral Length (feet)
48	19
54	21
60	23
66	26

DRILLED SHAFT FOUNDATION DETAIL

STANDARD PLANS
TEXAS DEPARTMENT OF TRANSPORTATION
Traffic Operations Division

HIGH MAST ILLUMINATION POLE FOUNDATIONS

SHEET 1 OF 2 — HMIF(1)-98

© TxDOT August 1995

DGN: TxDOT	CK: TxDOT	DW: TxDOT	CK: TxDOT	FED. RD. DIV.

REVISIONS
11-97
5-98 - Anchor Bolt Circle Dia

DISTRICT	FEDERAL AID PROJECT	SHEET
AUSTIN		588
COUNTY	CONTROL-SECT-JOB	HIGHWAY
WILLIAMSON	0683-06-027	SH 45 LOOP 1

78A

ACC:
PLATED
LEVEL
1 2 3

⑥ Includes normal 3 Ft exposure.
Shafts with more than 3 Ft exposure must have additional length.

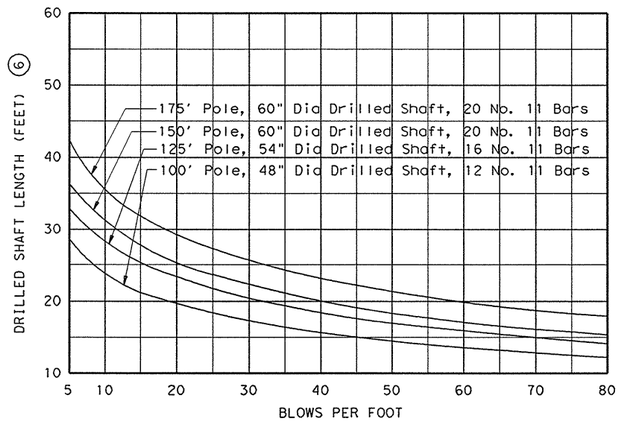

80 MPH POLES

Do not extrapolate below 5 Blows/Ft. A special design will be required for soil less than 5 Blows/Ft.

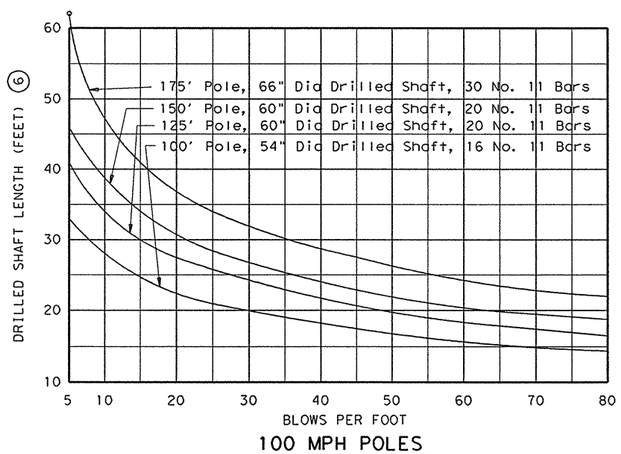

100 MPH POLES

Do not extrapolate below 5 Blows/Ft. A special design will be required for soil less than 5 Blows/Ft.

TEXAS CONE PENETROMETER TEST TABLES

NOTE: Use average "N" value over the top third of the embedded shaft. Ignore the top 2' of soil.

ANCHOR BOLT TABLE

	Pole Height (feet)	Bolt Diameter (inches)	Bolt Length (feet)	Bolt Templates O D (inches)	Bolt Templates I D (inches)	No. of Bolts ~	Bolt Cir Dia (inches)
80 MPH DESIGNS	8 SIDED POLE						
	175	2.25	4.83	45.5	36.5	16	41
	150	2.25	4.83	42.5	33.5	12	38
	125	2.25	4.83	39.5	30.5	8	35
	100	2.25	4.83	35.5	26.5	6	31
	12 SIDED POLE						
	175	2.25	4.83	48.5	39.5	12	44
	150	2.25	4.83	45.5	36.5	10	41
	125	2.25	4.83	40.5	31.5	8	36
	100	2.25	4.83	36.5	27.5	6	32
100 MPH DESIGNS	8 SIDED POLE						
	175	2.25	4.83	50.5	41.5	20	46
	150	2.25	4.83	47.5	38.5	16	43
	125	2.25	4.83	43.5	34.5	12	39
	100	2.25	4.83	38.5	29.5	10	34
	12 SIDED POLE						
	175	2.25	4.83	50.5	41.5	16	46
	150	2.25	4.83	48.5	39.5	12	44
	125	2.25	4.83	44.5	35.5	10	40
	100	2.25	4.83	40.5	31.5	6	36

MISCELLANEOUS QUANTITIES - ONE HMIF

Shaft Diameter	(in) ⑦	48	54	60
Concrete Riprap	(CY)	2.33	2.44	2.56
Reinforcing	(Lbs) ⑧	94	99	103
Ground Box	(ea)	1	1	1
R O W Marker	(ea) ⑨	1	1	1

⑦ See elsewhere on plans for length of Drilled Shaft required.
⑧ For Contractors information only.
⑨ Designated elsewhere on plans if required.

GENERAL NOTES:

Unless otherwise noted, the welded steel bands may be replaced with spiral as shown on the foundation details.

Anchor bolts shall be placed in foundation so there are always two bolts on reference line.

Drilled shaft lengths as determined from the foundation design chart or other acceptable methods are to be as shown elsewhere on the plans.

ODSR may not be used for HMIF drilled shafts.

Concrete for drilled shafts shall be Class C.

Repair welded areas with zinc-rich paint.

All Anchor Bolts, Nuts and Washers shall be galvanized in accordance with Item 445, "Galvanizing".

DISCLAIMER:
The use of this standard is governed by the "Texas Engineering Practice Act". No warranty of any kind is made by TxDOT for any purpose whatsoever. TxDOT assumes no responsibility for the conversion of this standard to other formats or for incorrect results or damages resulting from its use.

LEVEL PLAYED ACC:

STANDARD PLANS
TEXAS DEPARTMENT OF TRANSPORTATION
Traffic Operations Division

HIGH MAST ILLUMINATION POLE FOUNDATIONS

SHEET 2 OF 2 HMIF(2)-98

© TxDOT August 1995

DN: TxDOT CK: TxDOT DW: TxDOT CK: TxDOT MSG NO.:

REVISIONS
5-98 - Anchor Bolt Circle Dia

DISTRICT	FEDERAL AID PROJECT	SHEET
AUSTIN		589
COUNTY	CONTROL-SECT-JOB	HIGHWAY
WILLIAMSON	0683-06-027	SH 45 LOOP 1

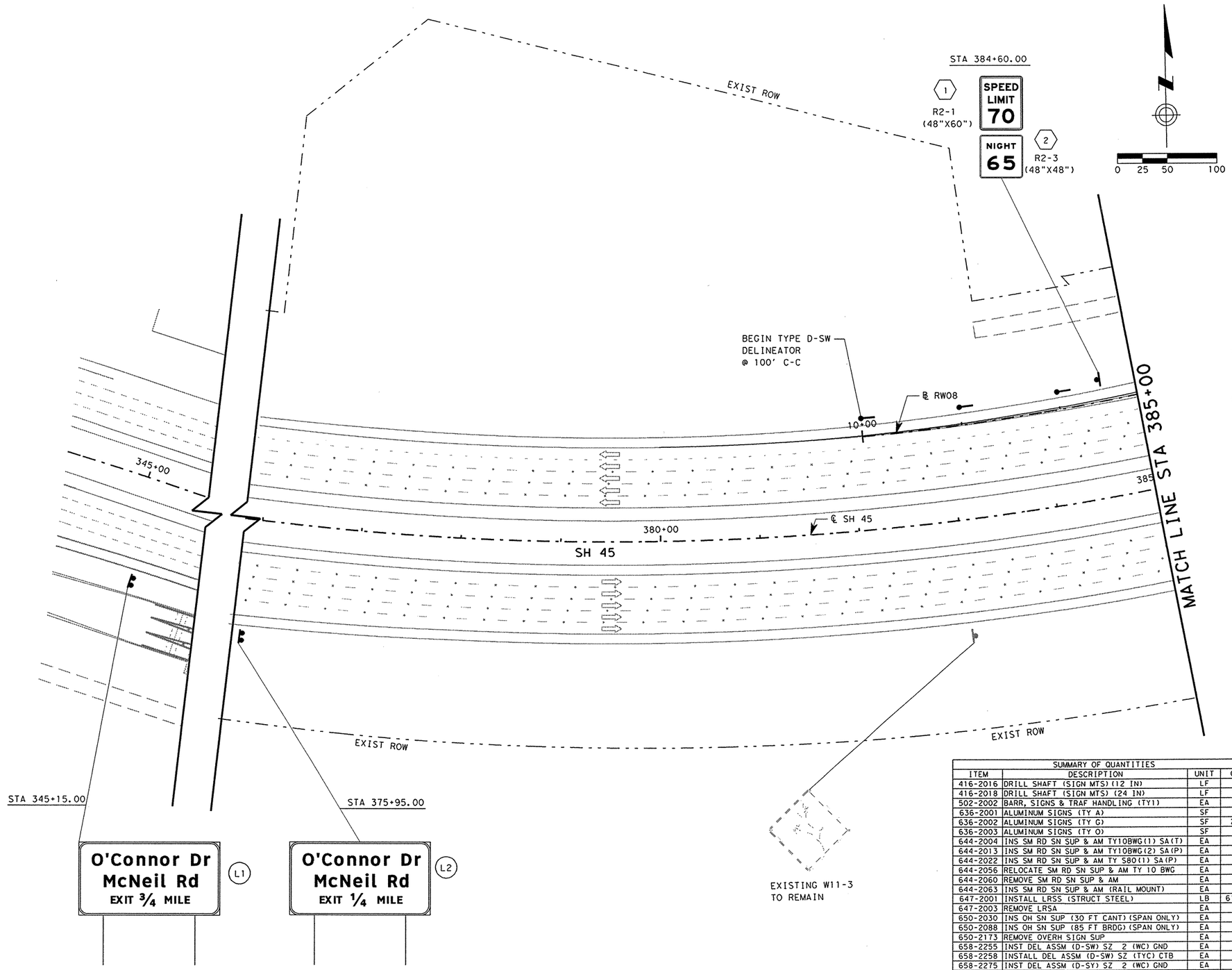

NOTES:

1. SIGN STATIONING IS FROM ℄ SH 45 UNLESS OTHERWISE INDICATED.
2. UTILITIES SHOWN ARE PROVIDED FOR INFORMATIONAL PURPOSES ONLY AND SHOULD BE FIELD VERIFIED PRIOR TO CONSTRUCTION.

LEGEND

- TRAFFIC DIRECTION/TRAVEL LANE
- # PROPOSED SMALL SIGN NUMBER
- L # PROPOSED LARGE SIGN NUMBER
- OC # OVERHEAD CANTILEVER SIGN NUMBER
- OB # OVERHEAD BRIDGE SIGN NUMBER
- OSSN OVERHEAD SIGN STRUCTURE NUMBER
- EXISTING SIGN POST FOR SMALL SIGN
- SIGN POST FOR SMALL SIGN
- SIGN POST WITH BACK TO BACK SMALL SIGNS
- SIGN POSTS FOR LARGE SIGN
- EXISTING OVERHEAD SIGN BRIDGE
- OVERHEAD CANTILEVER
- OVERHEAD SIGN BRIDGE
- DELINEATOR TYPE D-SW, TYPE D-SY
- DELINEATOR TYPE D-DW, TYPE D-DY
- OBJECT MARKER TYPE OM-2SR
- TYPE III BARRICADE (PERMANENT)
- BARRIER REFLECTOR TYPE C

STATE OF TEXAS
RENE U. GARZA
65409
REGISTERED
PROFESSIONAL ENGINEER

Rene U Garza PE
4/11/11

REV. NO.	DATE	REVISION	BY
△			
△			
△			

PBSJ
an Atkins company
TBPE REG. # F-474

Texas Department of Transportation
Austin District
©2011 by TxDOT

SUMMARY OF QUANTITIES

ITEM	DESCRIPTION	UNIT	QTY
416-2016	DRILL SHAFT (SIGN MTS)(12 IN)	LF	
416-2018	DRILL SHAFT (SIGN MTS) (24 IN)	LF	24
502-2002	BARR, SIGNS & TRAF HANDLING (TY1)	EA	
636-2001	ALUMINUM SIGNS (TY A)	SF	36
636-2002	ALUMINUM SIGNS (TY G)	SF	248
636-2003	ALUMINUM SIGNS (TY O)	SF	
644-2004	INS SM RD SN SUP & AM TY10BWG(1) SA(T)	EA	
644-2013	INS SM RD SN SUP & AM TY10BWG(2) SA(P)	EA	1
644-2022	INS SM RD SN SUP & AM TY S80(1) SA(P)	EA	
644-2056	RELOCATE SM RD SN SUP & AM TY 10 BWG	EA	
644-2060	REMOVE SM RD SN SUP & AM	EA	
644-2063	INS SM RD SN SUP & AM (RAIL MOUNT)	EA	
647-2001	INSTALL LRSS (STRUCT STEEL)	LB	618.8
647-2003	REMOVE LRSA	EA	
650-2030	INS OH SN SUP (30 FT CANT)(SPAN ONLY)	EA	
650-2088	INS OH SN SUP (85 FT BRDG)(SPAN ONLY)	EA	
650-2173	REMOVE OVERH SIGN SUP	EA	
658-2255	INST DEL ASSM (D-SW) SZ 2 (WC) GND	EA	3
658-2258	INSTALL DEL ASSM (D-SW) SZ (TYC) CTB	EA	
658-2275	INST DEL ASSM (D-SY) SZ 2 (WC) GND	EA	
658-2277	INSTALL DEL ASSM (D-SY) SZ (TYC) CTB	EA	
658-2300	INST DEL ASSM (D-DW) SZ 2 (WC) GND	EA	
658-2301	INST DEL ASSM (D-DY)SZ 2(WC) GND	EA	
5445-2001	DEAD END ROADWAY BARRICADE	LF	
6008-2002	REMOVE OVERHEAD SIGN PANELS	EA	

SH 45 / O'CONNOR DRIVE SIGNING LAYOUT SH 45 STA 374+00 TO 385+00

SCALE: 1"=100'

SHEET 1 OF 10

DESIGNED: RVP	FED. RD DIV. No.	STATE	PROJECT No.			HIGHWAY No.
CHECKED: SED	6	TEXAS				LP 1/SH 45
DRAWN: RVP	STATE DISTRICT	COUNTY	CONTROL No.	SECTION No.	JOB No.	SHEET No.
CHECKED: SED	AUSTIN	WILLIAMSON	0683	06	027	590

DATE: 4/11/2011 TIME: 10:59:38 AM

PLOT DRIVER: RD*11x17*PDF.plt
PEN TABLE: plotordr*ocon.tbl
FILE: r:\trans-design\o'connor\cadd\SNS\OC45SGN01.dgn

DATE: 4/11/2011 TIME: 10:59:40 AM

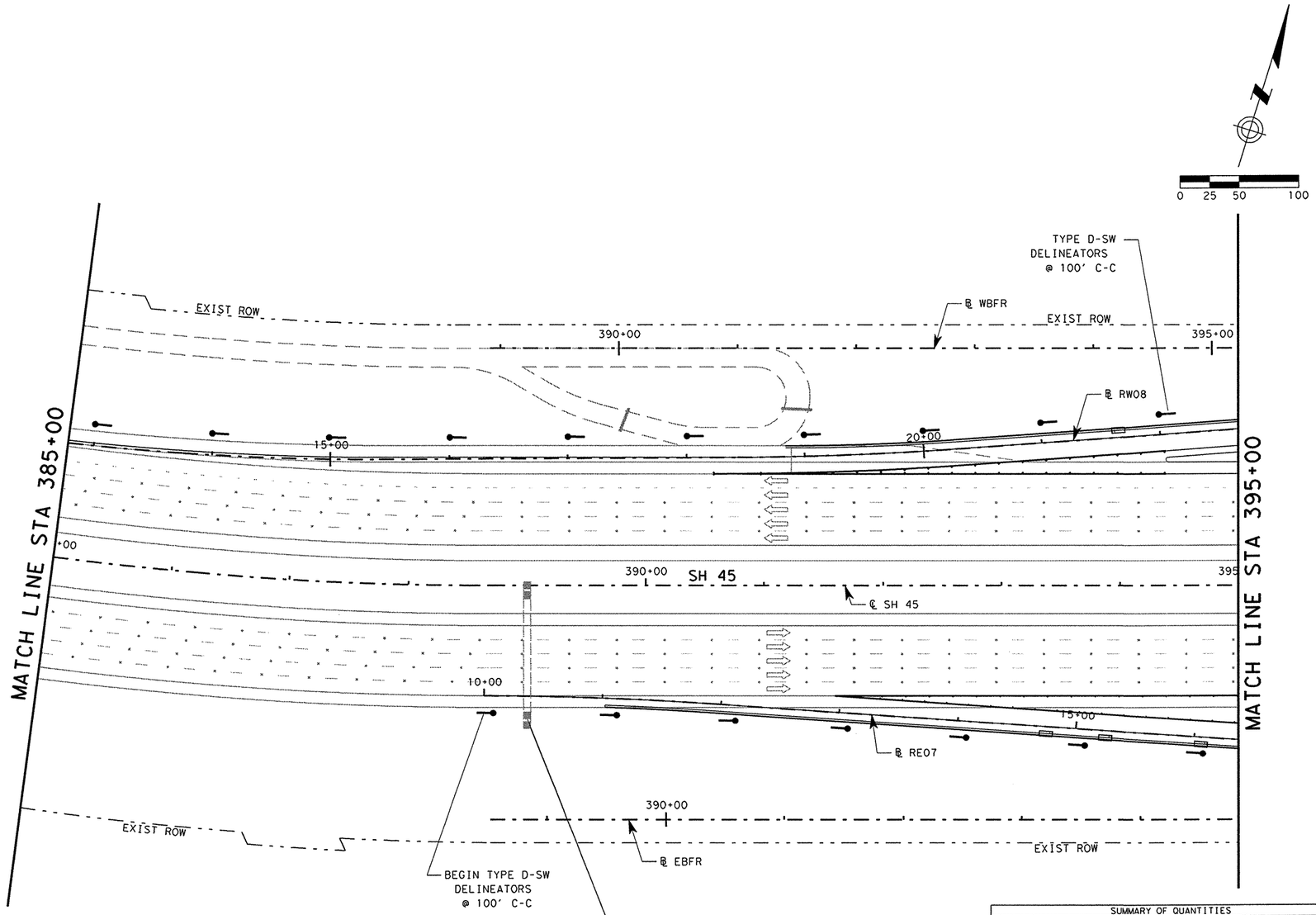

STA 389+00.00

OB-1

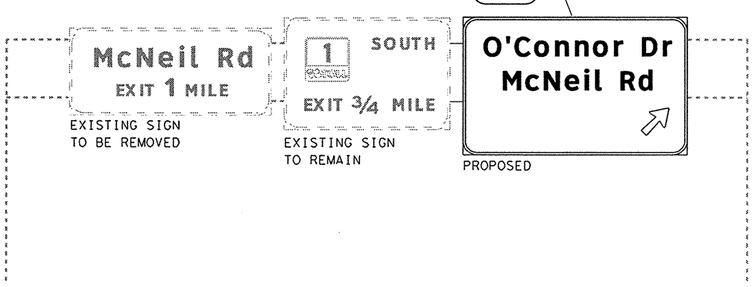

EXISTING SIGN TO BE REMOVED

EXISTING SIGN TO REMAIN

PROPOSED

NOTES:

1. SIGN STATIONING IS FROM ℄ SH 45 UNLESS OTHERWISE INDICATED.
2. UTILITIES SHOWN ARE PROVIDED FOR INFORMATIONAL PURPOSES ONLY AND SHOULD BE FIELD VERIFIED PRIOR TO CONSTRUCTION.

LEGEND

- TRAFFIC DIRECTION/TRAVEL LANE
- # PROPOSED SMALL SIGN NUMBER
- L # PROPOSED LARGE SIGN NUMBER
- OC # OVERHEAD CANTILEVER SIGN NUMBER
- OB # OVERHEAD BRIDGE SIGN NUMBER
- OSSN OVERHEAD SIGN STRUCTURE NUMBER
- EXISTING SIGN POST FOR SMALL SIGN
- SIGN POST FOR SMALL SIGN
- SIGN POST WITH BACK TO BACK SMALL SIGNS
- SIGN POSTS FOR LARGE SIGN
- EXISTING OVERHEAD SIGN BRIDGE
- OVERHEAD CANTILEVER
- OVERHEAD SIGN BRIDGE
- DELINEATOR TYPE D-SW, TYPE D-SY
- DELINEATOR TYPE D-DW, TYPE D-DY
- OBJECT MARKER TYPE OM-2SR
- TYPE III BARRICADE (PERMANENT)
- BARRIER REFLECTOR TYPE C

STATE OF TEXAS
RENE U. GARZA
65409
REGISTERED PROFESSIONAL ENGINEER

Rene U. Garza PE
4/11/11

REV. No.	DATE	REVISION	BY
△			
△			
△			

PBSJ
an Atkins company
TBPE REG. # F-474

Texas Department of Transportation
Austin District
©2011 by TxDOT

SUMMARY OF QUANTITIES

ITEM	DESCRIPTION	UNIT	QTY
416-2016	DRILL SHAFT (SIGN MTS)(12 IN)	LF	
416-2018	DRILL SHAFT (SIGN MTS) (24 IN)	LF	
502-2002	BARR, SIGNS & TRAF HANDLING (TY1)	EA	
636-2001	ALUMINUM SIGNS (TY A)	SF	
636-2002	ALUMINUM SIGNS (TY G)	SF	
636-2003	ALUMINUM SIGNS (TY O)	SF	147.25
644-2004	INS SM RD SN SUP & AM TY10BWG(1) SA(T)	EA	
644-2013	INS SM RD SN SUP & AM TY10BWG(2) SA(P)	EA	
644-2022	INS SM RD SN SUP & AM TY S80(1) SA(P)	EA	
644-2056	RELOCATE SM RD SN SUP & AM TY 10 BWG	EA	
644-2060	REMOVE SM RD SN SUP & AM	EA	
644-2063	INS SM RD SN SUP & AM (RAIL MOUNT)	EA	
647-2001	INSTALL LRSS (STRUCT STEEL)	LB	
647-2003	REMOVE LRSA	EA	
650-2030	INS OH SN SUP (30 FT CANT)(SPAN ONLY)	EA	
650-2088	INS OH SN SUP (85 FT BRDG)(SPAN ONLY)	EA	
650-2173	REMOVE OVERH SIGN SUP	EA	
658-2255	INST DEL ASSM (D-SW)SZ 2(WC) GND	EA	17
658-2258	INSTALL DEL ASSM (D-SW) SZ (TYC) CTB	EA	
658-2275	INST DEL ASSM (D-SY)SZ 2(WC) GND	EA	
658-2277	INSTALL DEL ASSM (D-SY) SZ (TYC) CTB	EA	
658-2300	INST DEL ASSM (D-DW)SZ 2(WC) GND	EA	
658-2301	INST DEL ASSM (D-DY)SZ 2(WC) GND	EA	
5445-2001	DEAD END ROADWAY BARRICADE	LF	
6008-2002	REMOVE OVERHEAD SIGN PANELS	EA	1

SH 45 / O'CONNOR DRIVE SIGNING LAYOUT SH 45 STA 385+00 TO 395+00

SCALE: 1"=100'

SHEET 2 OF 10

DESIGNED: RVP	FED. RD DIV. No.	STATE	PROJECT No.			HIGHWAY No.
CHECKED: SED	6	TEXAS				LP 1/SH 45
DRAWN: RVP	STATE DISTRICT	COUNTY	CONTROL No.	SECTION No.	JOB No.	SHEET No.
CHECKED: SED	AUSTIN	WILLIAMSON	0683	06	027	591

PLOT DRIVER: RD*11x17*PDF.plt
PEN TABLE: plotordr*ocon.tbl
FILE: r:\trans-design\o'connor\cadd\SNS\OC45SGN02.dgn

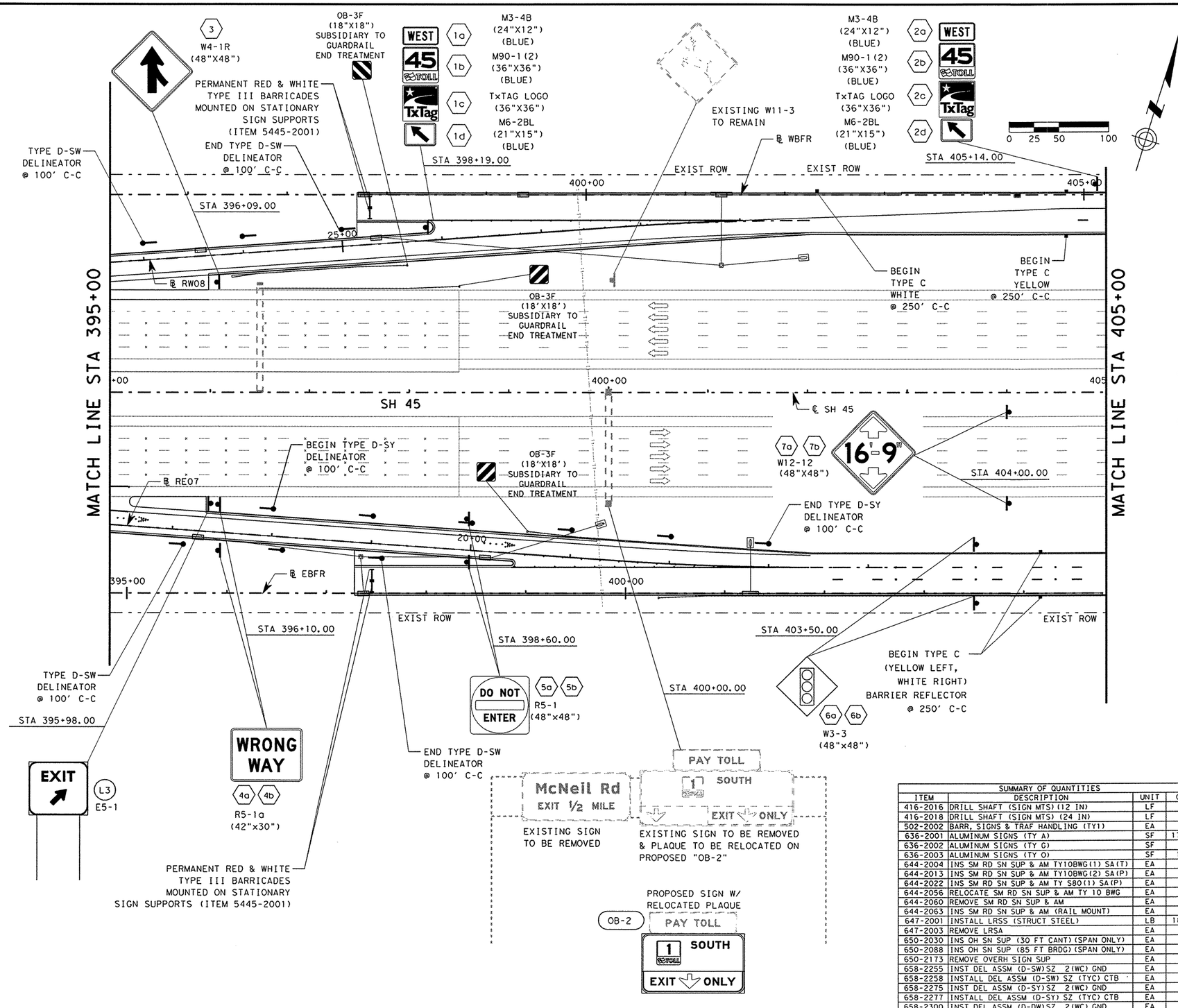

NOTES:

1. SIGN STATIONING IS FROM ℄ SH 45 UNLESS OTHERWISE INDICATED.
2. UTILITIES SHOWN ARE PROVIDED FOR INFORMATIONAL PURPOSES ONLY AND SHOULD BE FIELD VERIFIED PRIOR TO CONSTRUCTION.

LEGEND

- TRAFFIC DIRECTION/TRAVEL LANE
- # PROPOSED SMALL SIGN NUMBER
- L# PROPOSED LARGE SIGN NUMBER
- OC # OVERHEAD CANTILEVER SIGN NUMBER
- OB # OVERHEAD BRIDGE SIGN NUMBER
- OSSN OVERHEAD SIGN STRUCTURE NUMBER
- EXISTING SIGN POST FOR SMALL SIGN
- SIGN POST FOR SMALL SIGN
- SIGN POST WITH BACK TO BACK SMALL SIGNS
- SIGN POSTS FOR LARGE SIGN
- EXISTING OVERHEAD SIGN BRIDGE
- OVERHEAD CANTILEVER
- OVERHEAD SIGN BRIDGE
- DELINEATOR TYPE D-SW, TYPE D-SY
- DELINEATOR TYPE D-DW, TYPE D-DY
- OBJECT MARKER TYPE OM-2SR
- TYPE III BARRICADE (PERMANENT)
- BARRIER REFLECTOR TYPE C

STATE OF TEXAS
RENE U. GARZA
65409
REGISTERED
PROFESSIONAL ENGINEER

Rene U. Garza PE
4/11/11

REV. No.	DATE	REVISION	BY
△			
△			
△			

PBSJ
an Atkins company
TBPE REG. # F-474

Texas Department of Transportation
Austin District
©2011 by TxDOT

SUMMARY OF QUANTITIES

ITEM	DESCRIPTION	UNIT	QTY
416-2016	DRILL SHAFT (SIGN MTS)(12 IN)	LF	7
416-2018	DRILL SHAFT (SIGN MTS) (24 IN)	LF	
502-2002	BARR, SIGNS & TRAF HANDLING (TY1)	EA	
636-2001	ALUMINUM SIGNS (TY A)	SF	173.9
636-2002	ALUMINUM SIGNS (TY G)	SF	14
636-2003	ALUMINUM SIGNS (TY O)	SF	104
644-2004	INS SM RD SN SUP & AM TY10BWG(1) SA(T)	EA	9
644-2013	INS SM RD SN SUP & AM TY10BWG(2) SA(P)	EA	
644-2022	INS SM RD SN SUP & AM TY S80(1) SA(P)	EA	2
644-2056	RELOCATE SM RD SN SUP & AM TY 10 BWG	EA	
644-2060	REMOVE SM RD SN SUP & AM	EA	
644-2063	INS SM RD SN SUP & AM (RAIL MOUNT)	EA	
647-2001	INSTALL LRSS (STRUCT STEEL)	LB	186.1
647-2003	REMOVE LRSA	EA	
650-2030	INS OH SN SUP (30 FT CANT)(SPAN ONLY)	EA	
650-2088	INS OH SN SUP (85 FT BRDG)(SPAN ONLY)	EA	
650-2173	REMOVE OVERH SIGN SUP	EA	
658-2255	INST DEL ASSM (D-SW)SZ 2(WC) GND	EA	6
658-2258	INSTALL DEL ASSM (D-SW) SZ (TYC) CTB	EA	2
658-2275	INST DEL ASSM (D-SY)SZ 2(WC) GND	EA	6
658-2277	INSTALL DEL ASSM (D-SY) SZ (TYC) CTB	EA	2
658-2300	INST DEL ASSM (D-DW)SZ 2(WC) GND	EA	
658-2301	INST DEL ASSM (D-DY)SZ 2(WC) GND	EA	
5445-2001	DEAD END ROADWAY BARRICADE	LF	24
6008-2002	REMOVE OVERHEAD SIGN PANELS	EA	2

SH 45 / O'CONNOR DRIVE
SIGNING LAYOUT
SH 45
STA 395+00 TO 405+00

SCALE: 1"=100'

SHEET 3 OF 10

DESIGNED: RVP	FED. RD DIV. No.	STATE	PROJECT No.		HIGHWAY No.	
CHECKED: SED	6	TEXAS			LP 1/SH 45	
DRAWN: RVP	STATE DISTRICT	COUNTY	CONTROL No.	SECTION No.	JOB No.	SHEET No.
CHECKED: SED	AUSTIN	WILLIAMSON	0683	06	027	592

DATE: 4/11/2011 TIME: 10:59:42 AM

PLOT DRIVER: RD*11x17*PDF.plt
PEN TABLE: plotordr*ocon.tbl
FILE: r:\trans-design\o'connor\cadd\SNS\OC45SGN03.dgn

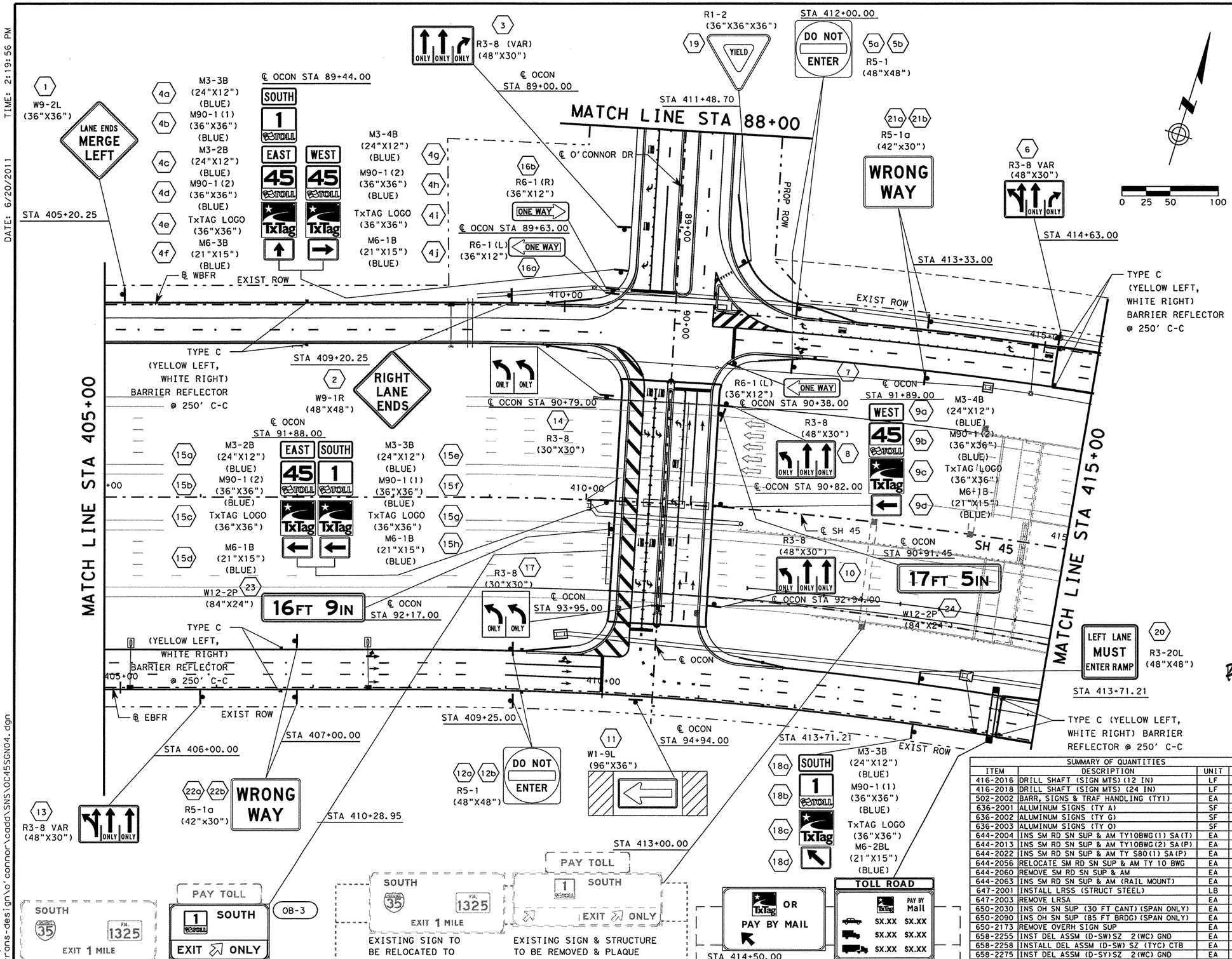

NOTES:

1. SIGN STATIONING IS FROM ℄ SH 45 UNLESS OTHERWISE INDICATED.
2. UTILITIES SHOWN ARE PROVIDED FOR INFORMATIONAL PURPOSES ONLY AND SHOULD BE FIELD VERIFIED PRIOR TO CONSTRUCTION.

LEGEND

- TRAFFIC DIRECTION/TRAVEL LANE
- # PROPOSED SMALL SIGN NUMBER
- L# PROPOSED LARGE SIGN NUMBER
- OC # OVERHEAD CANTILEVER SIGN NUMBER
- OB # OVERHEAD BRIDGE SIGN NUMBER
- OSSN OVERHEAD SIGN STRUCTURE NUMBER
- EXISTING SIGN POST FOR SMALL SIGN
- SIGN POST FOR SMALL SIGN
- SIGN POST WITH BACK TO BACK SMALL SIGNS
- SIGN POSTS FOR LARGE SIGN
- EXISTING OVERHEAD SIGN BRIDGE
- OVERHEAD CANTILEVER
- OVERHEAD SIGN BRIDGE
- DELINEATOR TYPE D-SW, TYPE D-SY
- DELINEATOR TYPE D-DW, TYPE D-DY
- OBJECT MARKER TYPE OM-2SR
- TYPE III BARRICADE (PERMANENT)
- BARRIER REFLECTOR TYPE C

RELOCATED SIGN MOUNTED ON O'CONNOR DRIVE BRIDGE

PROPOSED SIGN W/ RELOCATED PLAQUE

OB-3

EXISTING SIGN TO BE RELOCATED TO STA 410+28.95 & BRIDGE MOUNTED

EXISTING SIGN & STRUCTURE TO BE REMOVED & PLAQUE RELOCATED TO STA 410+28.95 PLACED ALONG WITH PROPOSED SIGN "OB-3"

STA 414+50.00

SIGNS & STRUCTURE TO BE INSTALLED BY OTHERS COORDINATE W/ DRAINAGE TO AVOID DRAINAGE STRUCURES

SUMMARY OF QUANTITIES			
ITEM	DESCRIPTION	UNIT	QTY
416-2016	DRILL SHAFT (SIGN MTS) (12 IN)	LF	
416-2018	DRILL SHAFT (SIGN MTS) (24 IN)	LF	
502-2002	BARR, SIGNS & TRAF HANDLING (TY1)	EA	
636-2001	ALUMINUM SIGNS (TY A)	SF	409.95
636-2002	ALUMINUM SIGNS (TY G)	SF	
636-2003	ALUMINUM SIGNS (TY O)	SF	104
644-2004	INS SM RD SN SUP & AM TY10BWG(1) SA(T)	EA	3
644-2013	INS SM RD SN SUP & AM TY10BWG(2) SA(P)	EA	
644-2022	INS SM RD SN SUP & AM TY S80(1) SA(P)	EA	
644-2056	RELOCATE SM RD SN SUP & AM TY 10 BWG	EA	
644-2060	REMOVE SM RD SN SUP & AM	EA	
644-2063	INS SM RD SN SUP & AM (RAIL MOUNT)	EA	29
647-2001	INSTALL LRSS (STRUCT STEEL)	LB	
647-2003	REMOVE LRSA	EA	
650-2030	INS OH SN SUP (30 FT CANT)(SPAN ONLY)	EA	
650-2090	INS OH SN SUP (85 FT BRDG)(SPAN ONLY)	EA	1
650-2173	REMOVE OVERH SIGN SUP	EA	1
658-2255	INST DEL ASSM (D-SW)SZ 2(WC) GND	EA	
658-2258	INSTALL DEL ASSM (D-SW) SZ (TYC) CTB	EA	8
658-2275	INST DEL ASSM (D-SY)SZ 2(WC) GND	EA	
658-2277	INSTALL DEL ASSM (D-SY) SZ (TYC) CTB	EA	8
658-2300	INST DEL ASSM (D-DW)SZ 2(WC) GND	EA	
658-2301	INST DEL ASSM (D-DY)SZ 2(WC) GND	EA	
5445-2001	DEAD END ROADWAY BARRICADE	LF	
6008-2002	REMOVE OVERHEAD SIGN PANELS	EA	2

STATE OF TEXAS
CESAR R. NEVAREZ
106199
LICENSED PROFESSIONAL ENGINEER

Rev. 6/29/11

Cesar R. Nevarez, PE
6.20.2011

REV. No.	DATE	REVISION	BY
△			
△			
△			

PBSJ
an Atkins company
TBPE REG. # F-474

Texas Department of Transportation
Austin District
©2011 by TxDOT

SH 45 / O'CONNOR DRIVE SIGNING LAYOUT SH 45 STA 405+00 TO 415+00

SCALE: 1"=100'

SHEET 4 OF 10

DESIGNED: RVP	FED. RD DIV. No.	STATE	PROJECT No.			HIGHWAY No.
CHECKED: SED	6	TEXAS				LP 1/SH 45
DRAWN: RVP	STATE DISTRICT	COUNTY	CONTROL No.	SECTION No.	JOB No.	SHEET No.
CHECKED: SED	AUSTIN	WILLIAMSON	0683	06	027	593

TIME: 2:19:56 PM
DATE: 6/20/2011

PLOT DRIVER: RDx11x17*B&W.plt
PEN TABLE: plotordr*ocon.tbl
FILE: r:\trans-design\o'connor\cadd\SNS\OC45SGN04.dgn

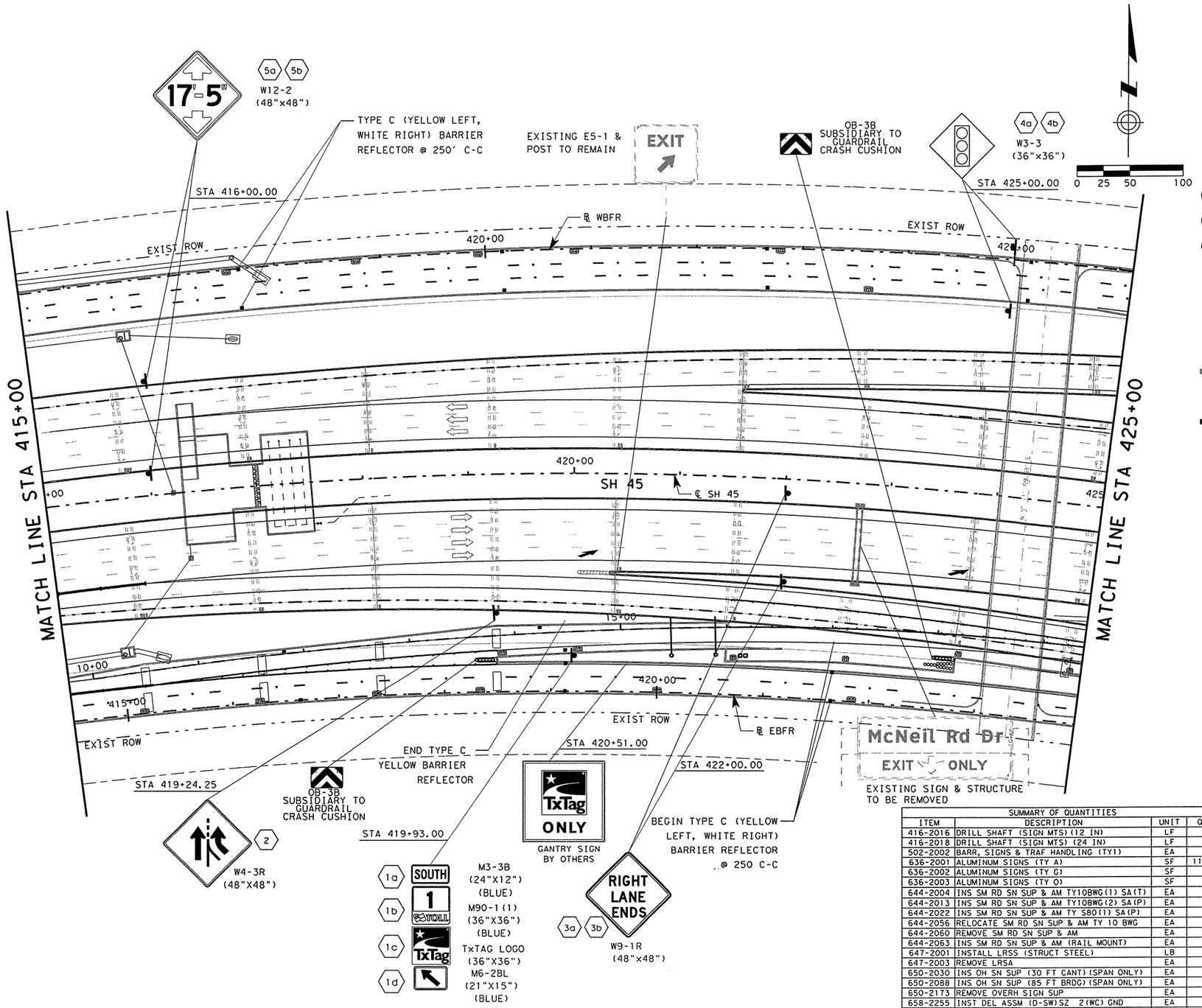

NOTES:

1. SIGN STATIONING IS FROM ℄ SH 45 UNLESS OTHERWISE INDICATED.
2. UTILITIES SHOWN ARE PROVIDED FOR INFORMATIONAL PURPOSES ONLY AND SHOULD BE FIELD VERIFIED PRIOR TO CONSTRUCTION.

LEGEND

- TRAFFIC DIRECTION/TRAVEL LANE
- # PROPOSED SMALL SIGN NUMBER
- L# PROPOSED LARGE SIGN NUMBER
- OC # OVERHEAD CANTILEVER SIGN NUMBER
- OB # OVERHEAD BRIDGE SIGN NUMBER
- OSSN OVERHEAD SIGN STRUCTURE NUMBER
- EXISTING SIGN POST FOR SMALL SIGN
- SIGN POST FOR SMALL SIGN
- SIGN POST WITH BACK TO BACK SMALL SIGNS
- SIGN POSTS FOR LARGE SIGN
- EXISTING OVERHEAD SIGN BRIDGE
- OVERHEAD CANTILEVER
- OVERHEAD SIGN BRIDGE
- DELINEATOR TYPE D-SW, TYPE D-SY
- DELINEATOR TYPE D-DW, TYPE D-DY
- OBJECT MARKER TYPE OM-2SR
- TYPE III BARRICADE (PERMANENT)
- BARRIER REFLECTOR TYPE C

STATE OF TEXAS
RENE U. GARZA
65409
REGISTERED PROFESSIONAL ENGINEER

Rene U Garza PE
4/11/11

REV. No.	DATE	REVISION	BY
△			
△			
△			

PBSJ
an Atkins company
TBPE REG. # F-474

Texas Department of Transportation
Austin District
©2011 by TxDOT

SUMMARY OF QUANTITIES

ITEM	DESCRIPTION	UNIT	QTY
416-2016	DRILL SHAFT (SIGN MTS)(12 IN)	LF	
416-2018	DRILL SHAFT (SIGN MTS) (24 IN)	LF	
502-2002	BARR, SIGNS & TRAF HANDLING (TY1)	EA	
636-2001	ALUMINUM SIGNS (TY A)	SF	111.2
636-2002	ALUMINUM SIGNS (TY G)	SF	
636-2003	ALUMINUM SIGNS (TY O)	SF	
644-2004	INS SM RD SN SUP & AM TY10BWG(1) SA(T)	EA	
644-2013	INS SM RD SN SUP & AM TY10BWG(2) SA(P)	EA	
644-2022	INS SM RD SN SUP & AM TY S80(1) SA(P)	EA	
644-2056	RELOCATE SM RD SN SUP & AM TY 10 BWG	EA	
644-2060	REMOVE SM RD SN SUP & AM	EA	
644-2063	INS SM RD SN SUP & AM (RAIL MOUNT)	EA	8
647-2001	INSTALL LRSS (STRUCT STEEL)	LB	
647-2003	REMOVE LRSA	EA	
650-2030	INS OH SN SUP (30 FT CANT)(SPAN ONLY)	EA	
650-2088	INS OH SN SUP (85 FT BRDG)(SPAN ONLY)	EA	
650-2173	REMOVE OVERH SIGN SUP	EA	1
658-2255	INST DEL ASSM (D-SW)SZ 2(WC) GND	EA	
658-2258	INSTALL DEL ASSM (D-SW) SZ (TYC) CTB	EA	9
658-2275	INST DEL ASSM (D-SY)SZ 2(WC) GND	EA	
658-2277	INSTALL DEL ASSM (D-SY) SZ (TYC) CTB	EA	8
658-2300	INST DEL ASSM (D-DW)SZ 2(WC) GND	EA	
658-2301	INST DEL ASSM (D-DY)SZ 2(WC) GND	EA	
5445-2001	DEAD END ROADWAY BARRICADE	LF	
6008-2002	REMOVE OVERHEAD SIGN PANELS	EA	1

SH 45 / O'CONNOR DRIVE
SIGNING LAYOUT
SH 45
STA 415+00 TO 425+00

SCALE: 1"=100'

SHEET 5 OF 10

DESIGNED: RVP	FED. RD DIV. No.	STATE	PROJECT No.			HIGHWAY No.
CHECKED: SED	6	TEXAS				LP 1/SH 45
DRAWN: RVP	STATE DISTRICT	COUNTY	CONTROL No.	SECTION No.	JOB No.	SHEET No.
CHECKED: SED	AUSTIN	WILLIAMSON	0683	06	027	594

DATE: 4/11/2011 TIME: 10:59:50 AM

PLOT DRIVER: RD*11x17*PDF.plt
PEN TABLE: plotordr*ocon.tbl
FILE: r:\trans-design\o'connor\cadd\SNS\OC45SGN05.dgn

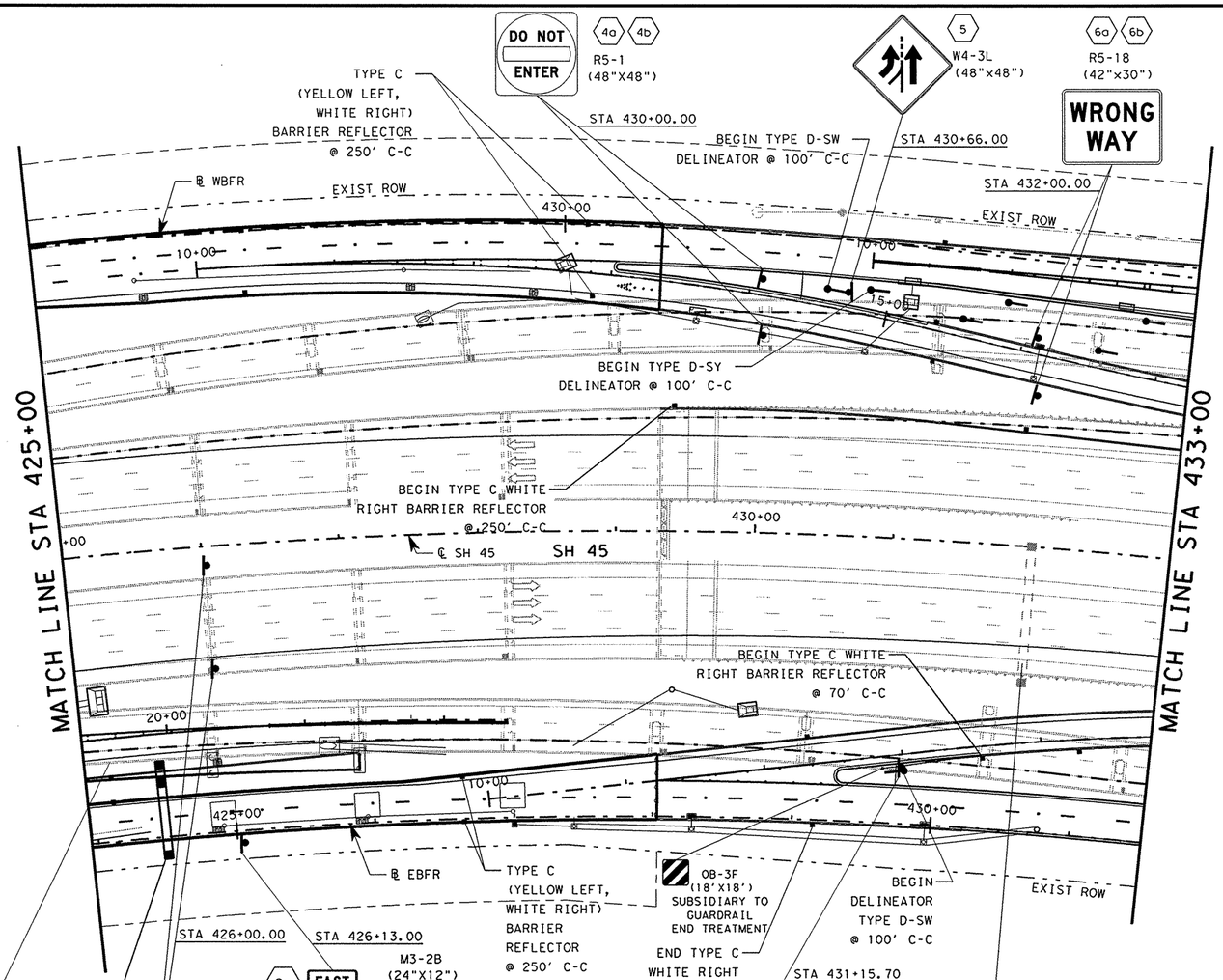

NOTES:

1. SIGN STATIONING IS FROM ℄ SH 45 UNLESS OTHERWISE INDICATED.
2. UTILITIES SHOWN ARE PROVIDED FOR INFORMATIONAL PURPOSES ONLY AND SHOULD BE FIELD VERIFIED PRIOR TO CONSTRUCTION.

LEGEND

- TRAFFIC DIRECTION/TRAVEL LANE
- # PROPOSED SMALL SIGN NUMBER
- L # PROPOSED LARGE SIGN NUMBER
- OC # OVERHEAD CANTILEVER SIGN NUMBER
- OB # OVERHEAD BRIDGE SIGN NUMBER
- OSSN OVERHEAD SIGN STRUCTURE NUMBER
- EXISTING SIGN POST FOR SMALL SIGN
- SIGN POST FOR SMALL SIGN
- SIGN POST WITH BACK TO BACK SMALL SIGNS
- SIGN POSTS FOR LARGE SIGN
- EXISTING OVERHEAD SIGN BRIDGE
- OVERHEAD CANTILEVER
- OVERHEAD SIGN BRIDGE
- DELINEATOR TYPE D-SW, TYPE D-SY
- DELINEATOR TYPE D-DW, TYPE D-DY
- OBJECT MARKER TYPE OM-2SR
- TYPE III BARRICADE (PERMANENT)
- BARRIER REFLECTOR TYPE C

0 25 50 100

STATE OF TEXAS
RENE U. GARZA
65409
REGISTERED PROFESSIONAL ENGINEER

Rene U. Garza PE
4/11/11

REV. No.	DATE	REVISION	BY
△			
△			
△			

PBSJ an Atkins company TBPE REG. # F-474

Texas Department of Transportation
Austin District
©2011 by TxDOT

SH 45 / O'CONNOR DRIVE SIGNING LAYOUT SH 45 STA 425+00 TO 433+00

SCALE: 1"=100' SHEET 6 OF 10

DESIGNED: RVP	FED. RD DIV. No.	STATE	PROJECT No.			HIGHWAY No.
CHECKED: SED	6	TEXAS				LP 1/SH 45
DRAWN: RVP	STATE DISTRICT	COUNTY	CONTROL No.	SECTION No.	JOB No.	SHEET No.
CHECKED: SED	AUSTIN	WILLIAMSON	0683	06	027	595

SUMMARY OF QUANTITIES

ITEM	DESCRIPTION	UNIT	QTY
416-2016	DRILL SHAFT (SIGN MTS)(12 IN)	LF	
416-2018	DRILL SHAFT (SIGN MTS) (24 IN)	LF	
502-2002	BARR, SIGNS & TRAF HANDLING (TY1)	EA	
636-2001	ALUMINUM SIGNS (TY A)	SF	125.9
636-2002	ALUMINUM SIGNS (TY G)	SF	
636-2003	ALUMINUM SIGNS (TY O)	SF	
644-2004	INS SM RD SN SUP & AM TY10BWG(1) SA(T)	EA	1
644-2013	INS SM RD SN SUP & AM TY10BWG(2) SA(P)	EA	
644-2022	INS SM RD SN SUP & AM TY S80(1) SA(P)	EA	
644-2056	RELOCATE SM RD SN SUP & AM TY 10 BWG	EA	
644-2060	REMOVE SM RD SN SUP & AM	EA	
644-2063	INS SM RD SN SUP & AM (RAIL MOUNT)	EA	8
647-2001	INSTALL LRSS (STRUCT STEEL)	LB	
647-2003	REMOVE LRSA	EA	
650-2030	INS OH SN SUP (30 FT CANT)(SPAN ONLY)	EA	
650-2088	INS OH SN SUP (85 FT BRDG)(SPAN ONLY)	EA	
650-2173	REMOVE OVERH SIGN SUP	EA	
658-2255	INST DEL ASSM (D-SW)SZ 2(WC) GND	EA	4
658-2258	INSTALL DEL ASSM (D-SW) SZ (TYC) CTB	EA	12
658-2275	INST DEL ASSM (D-SY)SZ 2(WC) GND	EA	3
658-2277	INSTALL DEL ASSM (D-SY) SZ (TYC) CTB	EA	6
658-2300	INST DEL ASSM (D-DW)SZ 2(WC) GND	EA	
658-2301	INST DEL ASSM (D-DY)SZ 2(WC) GND	EA	
5445-2001	DEAD END ROADWAY BARRICADE	LF	
6008-2002	REMOVE OVERHEAD SIGN PANELS	EA	1

PLOT DRIVER: RD*11x17*PDF.plt
PEN TABLE: plotordr*ocon.tbl
FILE: r:\trans-design\o'connor\cadd\SNS\OC45SGN06.dgn

DATE: 4/11/2011 TIME: 10:59:53 AM

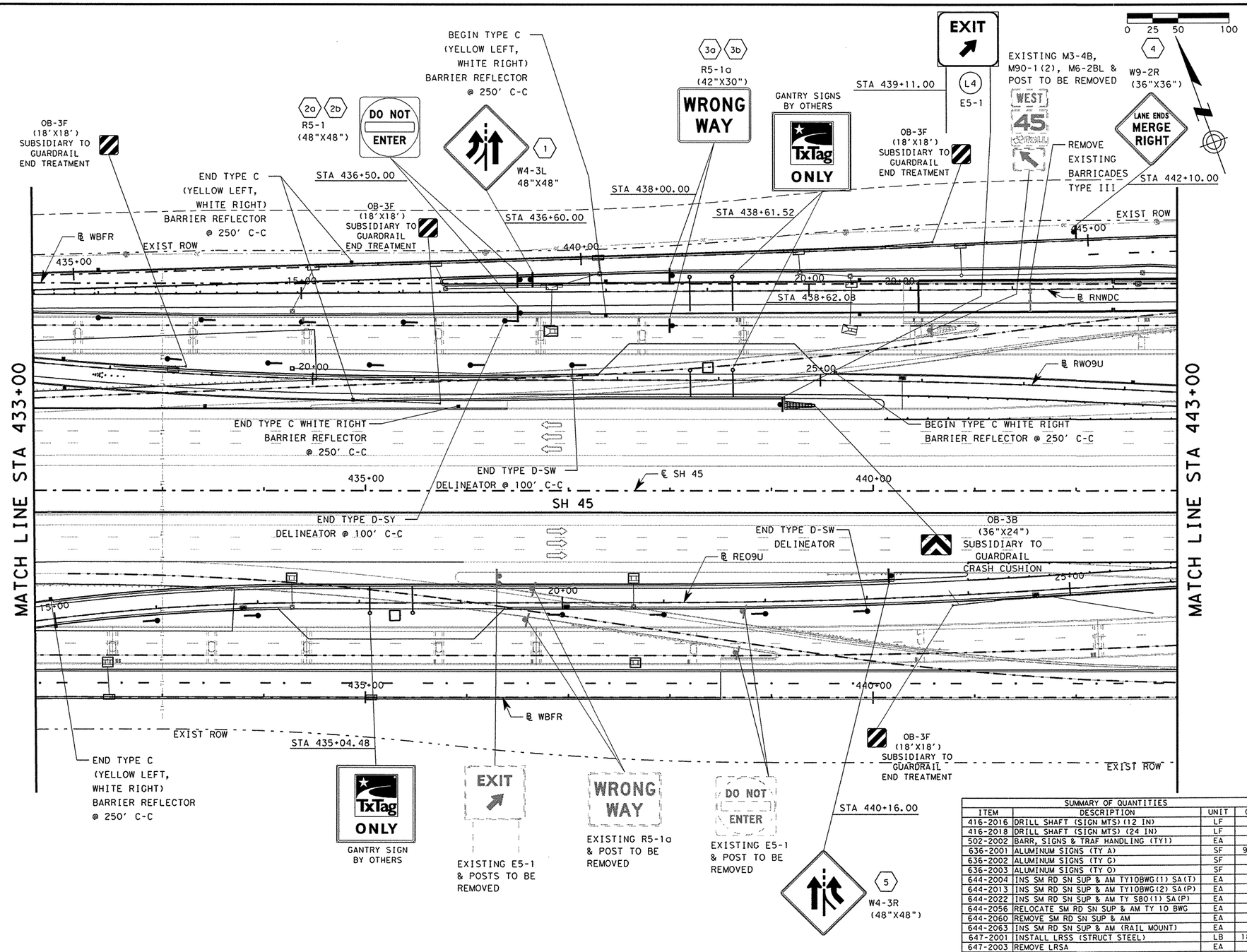

NOTES:

1. SIGN STATIONING IS FROM ℄ SH 45 UNLESS OTHERWISE INDICATED.
2. UTILITIES SHOWN ARE PROVIDED FOR INFORMATIONAL PURPOSES ONLY AND SHOULD BE FIELD VERIFIED PRIOR TO CONSTRUCTION.

LEGEND

- TRAFFIC DIRECTION/TRAVEL LANE
- # PROPOSED SMALL SIGN NUMBER
- L# PROPOSED LARGE SIGN NUMBER
- OC # OVERHEAD CANTILEVER SIGN NUMBER
- OB # OVERHEAD BRIDGE SIGN NUMBER
- OSSN OVERHEAD SIGN STRUCTURE NUMBER
- EXISTING SIGN POST FOR SMALL SIGN
- SIGN POST FOR SMALL SIGN
- SIGN POST WITH BACK TO BACK SMALL SIGNS
- SIGN POSTS FOR LARGE SIGN
- EXISTING OVERHEAD SIGN BRIDGE
- OVERHEAD CANTILEVER
- OVERHEAD SIGN BRIDGE
- DELINEATOR TYPE D-SW, TYPE D-SY
- DELINEATOR TYPE D-DW, TYPE D-DY
- OBJECT MARKER TYPE OM-2SR
- TYPE III BARRICADE (PERMANENT)
- BARRIER REFLECTOR TYPE C

STATE OF TEXAS
RENE U. GARZA
65409
REGISTERED PROFESSIONAL ENGINEER

Rene U Garza PE 4/11/11

REV. NO.	DATE	REVISION	BY
△			
△			
△			

PBSJ an Atkins company TBPE REG. # F-474

Texas Department of Transportation
Austin District
©2011 by TxDOT

SH 45 / O'CONNOR DRIVE SIGNING LAYOUT SH 45 STA 433+00 TO 443+00

SCALE: 1"=100' SHEET 7 OF 10

DESIGNED: RVP	FED. RD DIV. No.	STATE	PROJECT No.		HIGHWAY No.
CHECKED: SED	6	TEXAS	:		LP 1/SH 45
DRAWN: RVP	STATE DISTRICT	COUNTY	CONTROL No.	SECTION No.	JOB No.	SHEET No.
CHECKED: SED	AUSTIN	WILLIAMSON	0683	06	027	596

SUMMARY OF QUANTITIES

ITEM	DESCRIPTION	UNIT	QTY
416-2016	DRILL SHAFT (SIGN MTS)(12 IN)	LF	7
416-2018	DRILL SHAFT (SIGN MTS)(24 IN)	LF	
502-2002	BARR, SIGNS & TRAF HANDLING (TY1)	EA	3
636-2001	ALUMINUM SIGNS (TY A)	SF	90.5
636-2002	ALUMINUM SIGNS (TY G)	SF	14
636-2003	ALUMINUM SIGNS (TY O)	SF	
644-2004	INS SM RD SN SUP & AM TY10BWG(1) SA(T)	EA	7
644-2013	INS SM RD SN SUP & AM TY10BWG(2) SA(P)	EA	
644-2022	INS SM RD SN SUP & AM TY S80(1) SA(P)	EA	
644-2056	RELOCATE SM RD SN SUP & AM TY 10 BWG	EA	
644-2060	REMOVE SM RD SN SUP & AM	EA	5
644-2063	INS SM RD SN SUP & AM (RAIL MOUNT)	EA	
647-2001	INSTALL LRSS (STRUCT STEEL)	LB	186.1
647-2003	REMOVE LRSA	EA	1
650-2030	INS OH SN SUP (30 FT CANT)(SPAN ONLY)	EA	
650-2088	INS OH SN SUP (85 FT BRDG)(SPAN ONLY)	EA	
650-2173	REMOVE OVERH SIGN SUP	EA	
658-2255	INST DEL ASSM (D-SW)SZ 2(WC) GND	EA	11
658-2258	INSTALL DEL ASSM (D-SW) SZ (TYC) CTB	EA	11
658-2275	INST DEL ASSM (D-SY)SZ 2(WC) GND	EA	5
658-2277	INSTALL DEL ASSM (D-SY) SZ (TYC) CTB	EA	6
658-2300	INST DEL ASSM (D-DW)SZ 2(WC) GND	EA	
658-2301	INST DEL ASSM (D-DY)SZ 2(WC) GND	EA	
5445-2001	DEAD END ROADWAY BARRICADE	LF	
6008-2002	REMOVE OVERHEAD SIGN PANELS	EA	

DATE: 4/11/2011 TIME: 10:59:56 AM

PLOT DRIVER: RD*11x17*PDF.plt
PEN TABLE: plotordr*ocon.tbl
FILE: r:\trans-design\o'connor\cadd\SNS\OC45SGN07.dgn

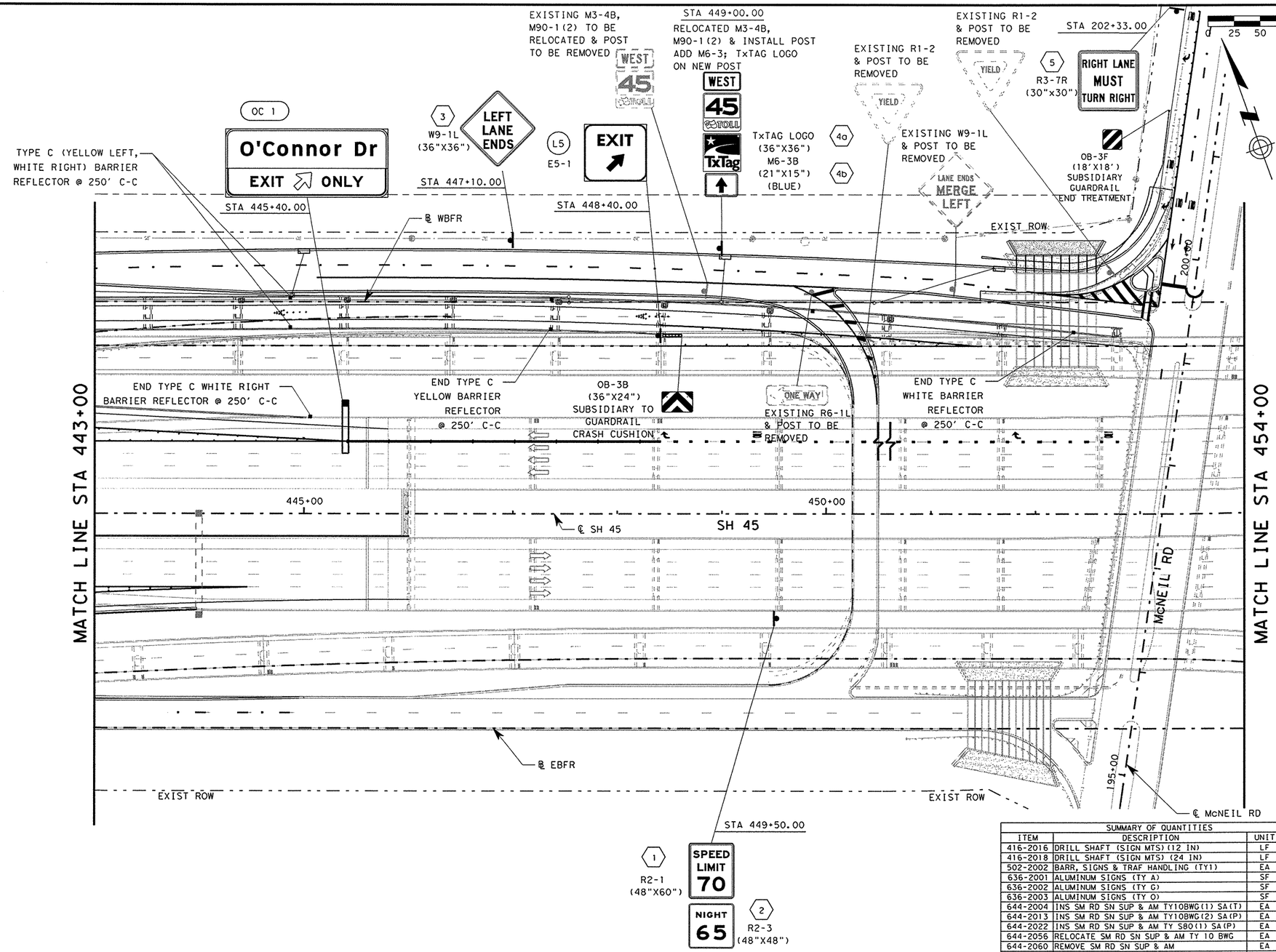

NOTES:

1. SIGN STATIONING IS FROM ℄ SH 45 UNLESS OTHERWISE INDICATED.
2. UTILITIES SHOWN ARE PROVIDED FOR INFORMATIONAL PURPOSES ONLY AND SHOULD BE FIELD VERIFIED PRIOR TO CONSTRUCTION.

LEGEND

- TRAFFIC DIRECTION/TRAVEL LANE
- # PROPOSED SMALL SIGN NUMBER
- L# PROPOSED LARGE SIGN NUMBER
- OC # OVERHEAD CANTILEVER SIGN NUMBER
- OB # OVERHEAD BRIDGE SIGN NUMBER
- OSSN OVERHEAD SIGN STRUCTURE NUMBER
- EXISTING SIGN POST FOR SMALL SIGN
- SIGN POST FOR SMALL SIGN
- SIGN POST WITH BACK TO BACK SMALL SIGNS
- SIGN POSTS FOR LARGE SIGN
- EXISTING OVERHEAD SIGN BRIDGE
- OVERHEAD CANTILEVER
- OVERHEAD SIGN BRIDGE
- DELINEATOR TYPE D-SW, TYPE D-SY
- DELINEATOR TYPE D-DW, TYPE D-DY
- OBJECT MARKER TYPE OM-2SR
- TYPE III BARRICADE (PERMANENT)
- BARRIER REFLECTOR TYPE C

STATE OF TEXAS
RENE U. GARZA
65409
REGISTERED PROFESSIONAL ENGINEER

Rene U Garza PE
4/11/14

REV. No.	DATE	REVISION	BY
△			
△			
△			

PBSJ an Atkins company TBPE REG. # F-474

Texas Department of Transportation
Austin District
©2011 by TxDOT

SH 45 / O'CONNOR DRIVE SIGNING LAYOUT SH 45 STA 443+00 TO 454+00

SCALE: 1"=100' SHEET 8 OF 10

SUMMARY OF QUANTITIES

ITEM	DESCRIPTION	UNIT	QTY
416-2016	DRILL SHAFT (SIGN MTS)(12 IN)	LF	
416-2018	DRILL SHAFT (SIGN MTS) (24 IN)	LF	
502-2002	BARR, SIGNS & TRAF HANDLING (TY1)	EA	
636-2001	ALUMINUM SIGNS (TY A)	SF	62.45
636-2002	ALUMINUM SIGNS (TY G)	SF	14
636-2003	ALUMINUM SIGNS (TY O)	SF	100.75
644-2004	INS SM RD SN SUP & AM TY10BWG(1) SA(T)	EA	1
644-2013	INS SM RD SN SUP & AM TY10BWG(2) SA(P)	EA	1
644-2022	INS SM RD SN SUP & AM TY S80(1) SA(P)	EA	1
644-2056	RELOCATE SM RD SN SUP & AM TY 10 BWG	EA	1
644-2060	REMOVE SM RD SN SUP & AM	EA	4
644-2063	INS SM RD SN SUP & AM (RAIL MOUNT)	EA	1
647-2001	INSTALL LRSS (STRUCT STEEL)	LB	
647-2003	REMOVE LRSA	EA	
650-2030	INS OH SN SUP (30 FT CANT)(SPAN ONLY)	EA	1
650-2088	INS OH SN SUP (85 FT BRDG)(SPAN ONLY)	EA	
650-2173	REMOVE OVERH SIGN SUP	EA	
658-2255	INST DEL ASSM (D-SW)SZ 2(WC) GND	EA	
658-2258	INSTALL DEL ASSM (D-SW) SZ (TYC) CTB	EA	5
658-2275	INST DEL ASSM (D-SY)SZ 2(WC) GND	EA	
658-2277	INSTALL DEL ASSM (D-SY) SZ (TYC) CTB	EA	2
658-2300	INST DEL ASSM (D-DW)SZ 2(WC) GND	EA	
658-2301	INST DEL ASSM (D-DY)SZ 2(WC) GND	EA	
5445-2001	DEAD END ROADWAY BARRICADE	LF	
6008-2002	REMOVE OVERHEAD SIGN PANELS	EA	

DESIGNED: RVP	FED. RD DIV. No.	STATE	PROJECT No.			HIGHWAY No.
CHECKED: SED	6	TEXAS				LP 1/SH 45

DRAWN: RVP	STATE DISTRICT	COUNTY	CONTROL No.	SECTION No.	JOB No.	SHEET No.
CHECKED: SED	AUSTIN	WILLIAMSON	0683	06	027	597

DATE: 4/11/2011 TIME: 10:59:59 AM

PLOT DRIVER: RD*11x17*PDF.plt
PEN TABLE: plotordr*ocon.tbl
FILE: r:\trans-design\o'connor\cadd\SNS\OC45SGN08.dgn

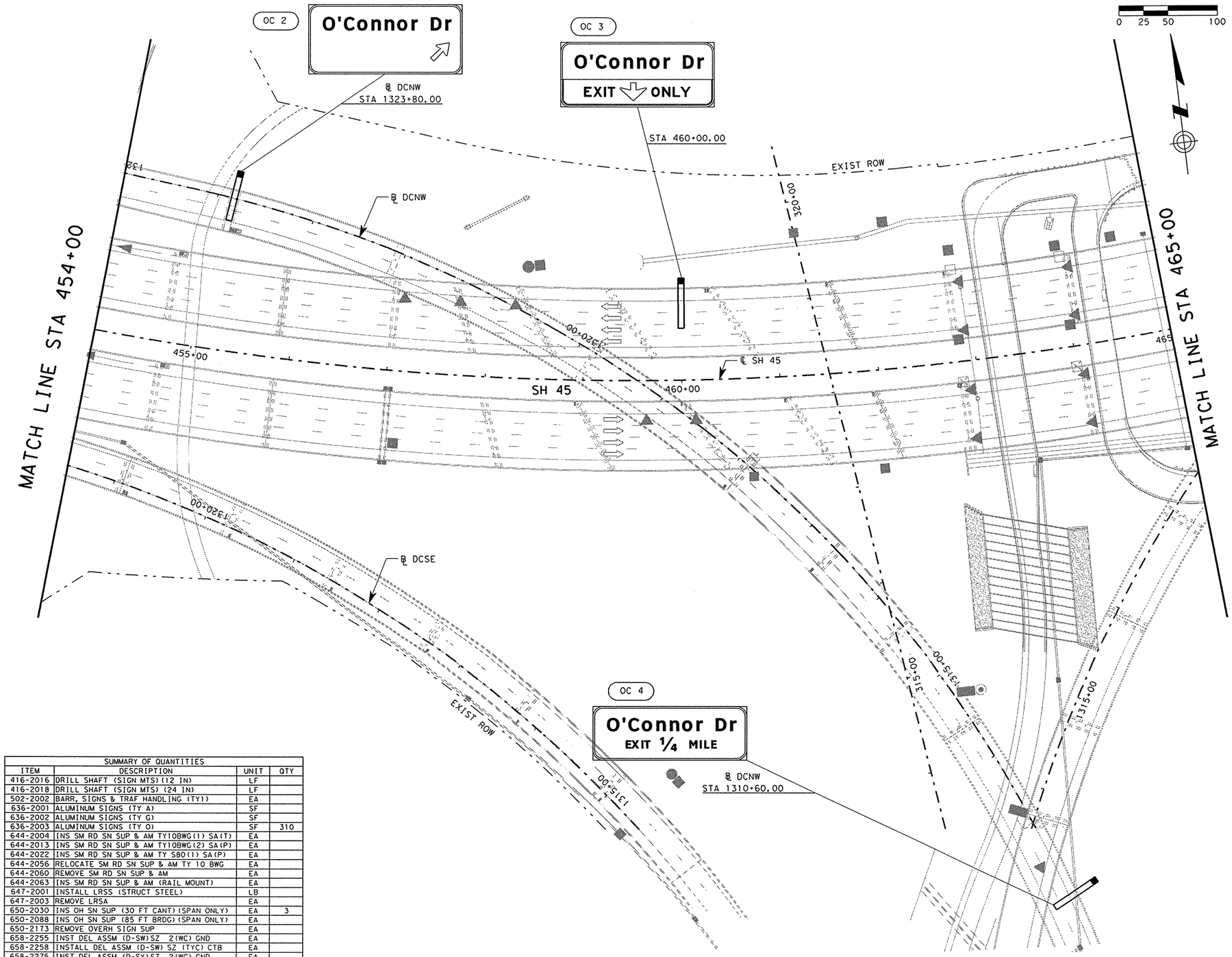

NOTES:

1. SIGN STATIONING IS FROM ℄ SH 45 UNLESS OTHERWISE INDICATED.
2. UTILITIES SHOWN ARE PROVIDED FOR INFORMATIONAL PURPOSES ONLY AND SHOULD BE FIELD VERIFIED PRIOR TO CONSTRUCTION.

LEGEND

- TRAFFIC DIRECTION/TRAVEL LANE
- # PROPOSED SMALL SIGN NUMBER
- L# PROPOSED LARGE SIGN NUMBER
- OC # OVERHEAD CANTILEVER SIGN NUMBER
- OB # OVERHEAD BRIDGE SIGN NUMBER
- OSSN OVERHEAD SIGN STRUCTURE NUMBER
- EXISTING SIGN POST FOR SMALL SIGN
- SIGN POST FOR SMALL SIGN
- SIGN POST WITH BACK TO BACK SMALL SIGNS
- SIGN POSTS FOR LARGE SIGN
- EXISTING OVERHEAD SIGN BRIDGE
- OVERHEAD CANTILEVER
- OVERHEAD SIGN BRIDGE
- DELINEATOR TYPE D-SW, TYPE D-SY
- DELINEATOR TYPE D-DW, TYPE D-DY
- OBJECT MARKER TYPE OM-2SR
- TYPE III BARRICADE (PERMANENT)
- BARRIER REFLECTOR TYPE C

STATE OF TEXAS
RENE U. GARZA
65409
REGISTERED PROFESSIONAL ENGINEER

Rene U Garza PE
4/11/11

SUMMARY OF QUANTITIES			
ITEM	DESCRIPTION	UNIT	QTY
416-2016	DRILL SHAFT (SIGN MTS)(12 IN)	LF	
416-2018	DRILL SHAFT (SIGN MTS)(24 IN)	LF	
502-2002	BARR, SIGNS & TRAF HANDLING (TY1)	EA	
636-2001	ALUMINUM SIGNS (TY A)	SF	
636-2002	ALUMINUM SIGNS (TY G)	SF	
636-2003	ALUMINUM SIGNS (TY O)	SF	310
644-2004	INS SM RD SN SUP & AM TY10BWG(1) SA(T)	EA	
644-2013	INS SM RD SN SUP & AM TY10BWG(2) SA(P)	EA	
644-2022	INS SM RD SN SUP & AM TY S80(1) SA(P)	EA	
644-2056	RELOCATE SM RD SN SUP & AM TY 10 BWG	EA	
644-2060	REMOVE SM RD SN SUP & AM	EA	
644-2063	INS SM RD SN SUP & AM (RAIL MOUNT)	EA	
647-2001	INSTALL LRSS (STRUCT STEEL)	LB	
647-2003	REMOVE LRSA	EA	
650-2030	INS OH SN SUP (30 FT CANT)(SPAN ONLY)	EA	3
650-2088	INS OH SN SUP (85 FT BRDG)(SPAN ONLY)	EA	
650-2173	REMOVE OVERH SIGN SUP	EA	
658-2255	INST DEL ASSM (D-SW)SZ 2(WC) GND	EA	
658-2258	INSTALL DEL ASSM (D-SW) SZ (TYC) CTB	EA	
658-2275	INST DEL ASSM (D-SY)SZ 2(WC) GND	EA	
658-2277	INSTALL DEL ASSM (D-SY) SZ (TYC) CTB	EA	
658-2300	INST DEL ASSM (D-DW)SZ 2(WC) GND	EA	
658-2301	INST DEL ASSM (D-DY)SZ 2(WC) GND	EA	
5445-2001	DEAD END ROADWAY BARRICADE	LF	
6008-2002	REMOVE OVERHEAD SIGN PANELS	EA	

REV. No.	DATE	REVISION	BY
△			
△			
△			

PBSJ
an Atkins company TBPE REG. # F-474

Texas Department of Transportation
Austin District
©2011 by TxDOT

SH 45 / O'CONNOR DRIVE SIGNING LAYOUT SH 45 STA 454+00 TO 465+00

SCALE: 1"=100' SHEET 9 OF 10

DESIGNED: RVP	FED. RD DIV. No.	STATE	PROJECT No.			HIGHWAY No.
CHECKED: SED	6	TEXAS				LP 1/SH 45
DRAWN: RVP	STATE DISTRICT	COUNTY	CONTROL No.	SECTION No.	JOB No.	SHEET No.
CHECKED: SED	AUSTIN	WILLIAMSON	0683	06	027	598

DATE: 4/11/2011 TIME: 11:00:03 AM
PLOT DRIVER: RD*11x17*PDF.plt
PEN TABLE: plotordr*ocon.tbl
FILE: r:\trans-design\o'connor\cadd\SNS\OC45SGN09.dgn

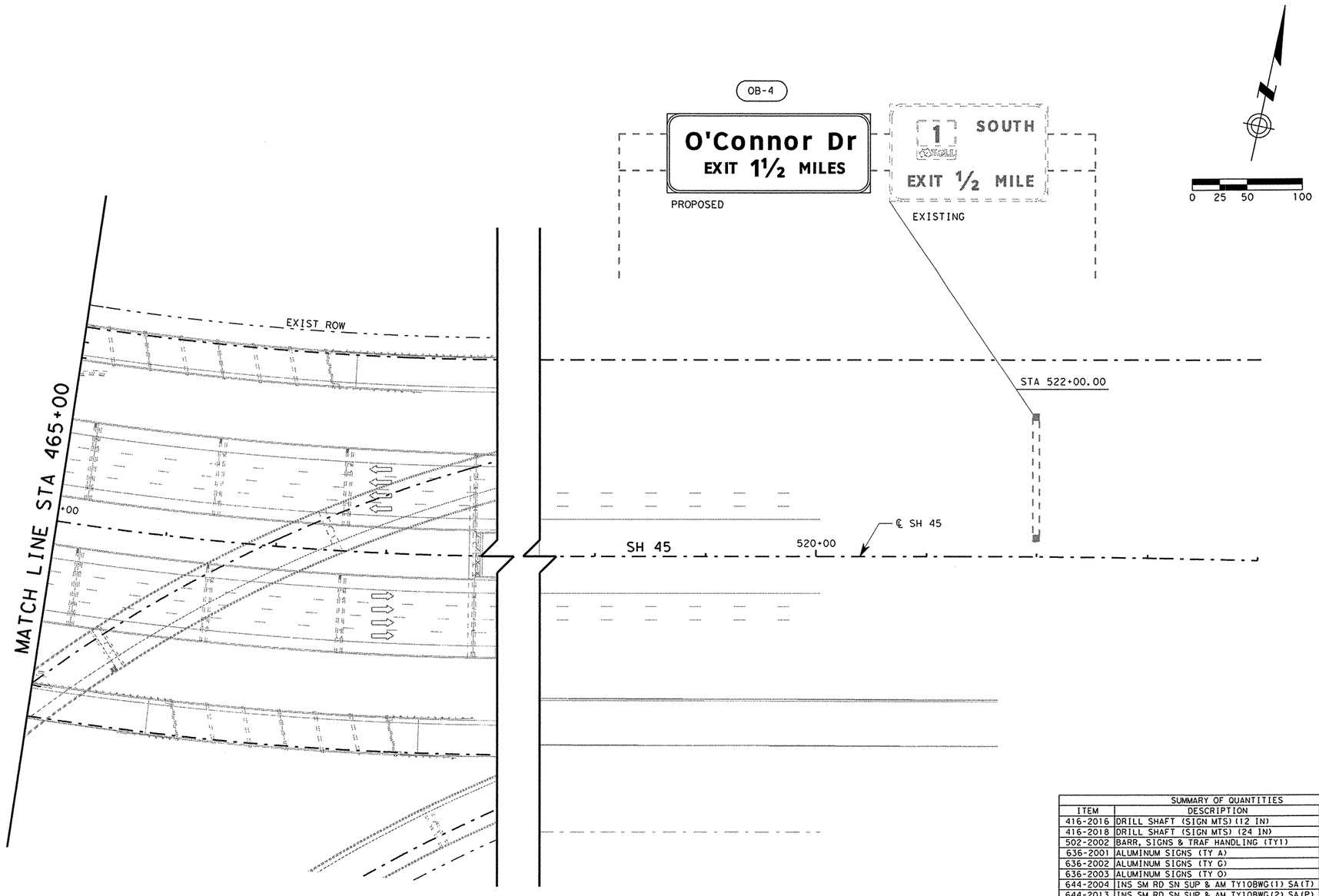

NOTES:

1. SIGN STATIONING IS FROM ℄ SH 45 UNLESS OTHERWISE INDICATED.
2. UTILITIES SHOWN ARE PROVIDED FOR INFORMATIONAL PURPOSES ONLY AND SHOULD BE FIELD VERIFIED PRIOR TO CONSTRUCTION.

LEGEND

- TRAFFIC DIRECTION/TRAVEL LANE
- # PROPOSED SMALL SIGN NUMBER
- L # PROPOSED LARGE SIGN NUMBER
- OC # OVERHEAD CANTILEVER SIGN NUMBER
- OB # OVERHEAD BRIDGE SIGN NUMBER
- OSSN OVERHEAD SIGN STRUCTURE NUMBER
- EXISTING SIGN POST FOR SMALL SIGN
- SIGN POST FOR SMALL SIGN
- SIGN POST WITH BACK TO BACK SMALL SIGNS
- SIGN POSTS FOR LARGE SIGN
- EXISTING OVERHEAD SIGN BRIDGE
- OVERHEAD CANTILEVER
- OVERHEAD SIGN BRIDGE
- DELINEATOR TYPE D-SW, TYPE D-SY
- DELINEATOR TYPE D-DW, TYPE D-DY
- OBJECT MARKER TYPE OM-2SR
- TYPE III BARRICADE (PERMANENT)
- BARRIER REFLECTOR TYPE C

STATE OF TEXAS
RENE U. GARZA
65409
REGISTERED
PROFESSIONAL ENGINEER

Rene U Garza PE
6/3/11

REV. No.	DATE	REVISION	BY
△			
△			
△			

PBSJ
an Atkins company TBPE REG. # F-474

Texas Department of Transportation
Austin District
©2011 by TxDOT

SUMMARY OF QUANTITIES

ITEM	DESCRIPTION	UNIT	QTY
416-2016	DRILL SHAFT (SIGN MTS)(12 IN)	LF	
416-2018	DRILL SHAFT (SIGN MTS) (24 IN)	LF	
502-2002	BARR, SIGNS & TRAF HANDLING (TY1)	EA	
636-2001	ALUMINUM SIGNS (TY A)	SF	
636-2002	ALUMINUM SIGNS (TY G)	SF	
636-2003	ALUMINUM SIGNS (TY O)	SF	93
644-2004	INS SM RD SN SUP & AM TY10BWG(1) SA(T)	EA	
644-2013	INS SM RD SN SUP & AM TY10BWG(2) SA(P)	EA	
644-2022	INS SM RD SN SUP & AM TY S80(1) SA(P)	EA	
644-2056	RELOCATE SM RD SN SUP & AM TY 10 BWG	EA	
644-2060	REMOVE SM RD SN SUP & AM	EA	
644-2063	INS SM RD SN SUP & AM (RAIL MOUNT)	EA	
647-2001	INSTALL LRSS (STRUCT STEEL)	LB	
647-2003	REMOVE LRSA	EA	
650-2030	INS OH SN SUP (30 FT CANT)(SPAN ONLY)	EA	
650-2088	INS OH SN SUP (85 FT BRDG)(SPAN ONLY)	EA	
650-2173	REMOVE OVERH SIGN SUP	EA	
658-2255	INST DEL ASSM (D-SW)SZ 2(WC) GND	EA	
658-2258	INSTALL DEL ASSM (D-SW) SZ (TYC) CTB	EA	
658-2275	INST DEL ASSM (D-SY)SZ 2(WC) GND	EA	
658-2277	INSTALL DEL ASSM (D-SY) SZ (TYC) CTB	EA	
658-2300	INST DEL ASSM (D-DW)SZ 2(WC) GND	EA	
658-2301	INST DEL ASSM (D-DY)SZ 2(WC) GND	EA	
5445-2001	DEAD END ROADWAY BARRICADE	LF	
6008-2002	REMOVE OVERHEAD SIGN PANELS	EA	

SH 45 / O'CONNOR DRIVE SIGNING LAYOUT SH 45 STA 465+00 TO 522+00

SCALE: 1"=100' SHEET 10 OF 10

DESIGNED: RVP	FED. RD DIV. No.	STATE	PROJECT No.			HIGHWAY No.
CHECKED: SED	6	TEXAS				LP 1/SH 45
DRAWN: RVP	STATE DISTRICT	COUNTY	CONTROL No.	SECTION No.	JOB No.	SHEET No.
CHECKED: SED	AUSTIN	WILLIAMSON	0683	06	027	599

DATE: 6/2/2011 TIME: 3:53:21 PM

PLOT DRIVER: RD*11x17*PDF.pltx
PEN TABLE: plotordr*ocon.tbl
FILE: r:\trans-design\o'connor\cadd\SNS\OC45SGN10.dgn

DATE: 4/11/2011 TIME: 11:00:09 AM

NOTES:

1. SIGN STATIONING IS FROM ℄ SH 45 UNLESS OTHERWISE INDICATED.
2. UTILITIES SHOWN ARE PROVIDED FOR INFORMATIONAL PURPOSES ONLY AND SHOULD BE FIELD VERIFIED PRIOR TO CONSTRUCTION.

LEGEND

- TRAFFIC DIRECTION/TRAVEL LANE
- # PROPOSED SMALL SIGN NUMBER
- L # PROPOSED LARGE SIGN NUMBER
- OC # OVERHEAD CANTILEVER SIGN NUMBER
- OB # OVERHEAD BRIDGE SIGN NUMBER
- OSSN OVERHEAD SIGN STRUCTURE NUMBER
- EXISTING SIGN POST FOR SMALL SIGN
- SIGN POST FOR SMALL SIGN
- SIGN POST WITH BACK TO BACK SMALL SIGNS
- SIGN POSTS FOR LARGE SIGN
- EXISTING OVERHEAD SIGN BRIDGE
- OVERHEAD CANTILEVER
- OVERHEAD SIGN BRIDGE
- DELINEATOR TYPE D-SW, TYPE D-SY
- DELINEATOR TYPE D-DW, TYPE D-DY
- OBJECT MARKER TYPE OM-2SR
- TYPE III BARRICADE (PERMANENT)
- BARRIER REFLECTOR TYPE C

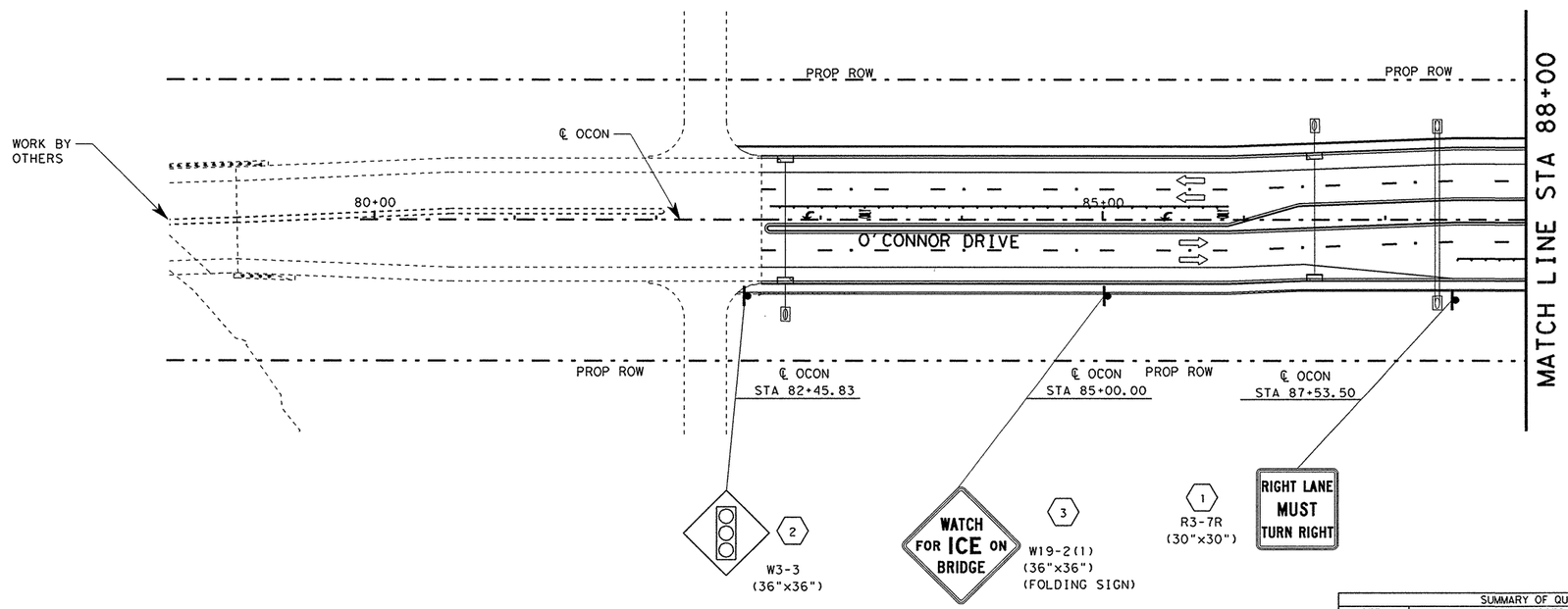

SUMMARY OF QUANTITIES			
ITEM	DESCRIPTION	UNIT	QTY
416-2016	DRILL SHAFT (SIGN MTS)(12 IN)	LF	
416-2018	DRILL SHAFT (SIGN MTS) (24 IN)	LF	
502-2002	BARR, SIGNS & TRAF HANDLING (TY1)	EA	
636-2001	ALUMINUM SIGNS (TY A)	SF	24.25
636-2002	ALUMINUM SIGNS (TY G)	SF	
636-2003	ALUMINUM SIGNS (TY O)	SF	
644-2004	INS SM RD SN SUP & AM TY10BWG(1) SA(T)	EA	3
644-2013	INS SM RD SN SUP & AM TY10BWG(2) SA(P)	EA	
644-2022	INS SM RD SN SUP & AM TY S80(1) SA(P)	EA	
644-2056	RELOCATE SM RD SN SUP & AM TY 10 BWG	EA	
644-2060	REMOVE SM RD SN SUP & AM	EA	
644-2063	INS SM RD SN SUP & AM (RAIL MOUNT)	EA	
647-2001	INSTALL LRSS (STRUCT STEEL)	LB	
647-2003	REMOVE LRSA	EA	
650-2030	INS OH SN SUP (30 FT CANT)(SPAN ONLY)	EA	
650-2088	INS OH SN SUP (85 FT BRDG)(SPAN ONLY)	EA	
650-2173	REMOVE OVERH SIGN SUP	EA	
658-2255	INST DEL ASSM (D-SW)SZ 2(WC) GND	EA	
658-2258	INSTALL DEL ASSM (D-SW) SZ (TYC) CTB	EA	
658-2275	INST DEL ASSM (D-SY)SZ 2(WC) GND	EA	
658-2277	INSTALL DEL ASSM (D-SY) SZ (TYC) CTB	EA	
658-2300	INST DEL ASSM (D-DW)SZ 2(WC) GND	EA	
658-2301	INST DEL ASSM (D-DY)SZ 2(WC) GND	EA	
5445-2001	DEAD END ROADWAY BARRICADE	LF	
6008-2002	REMOVE OVERHEAD SIGN PANELS	EA	

STATE OF TEXAS
RENE U. GARZA
65409
REGISTERED PROFESSIONAL ENGINEER

Rene U Garza PE
4/11/11

REV. NO.	DATE	REVISION	BY
△			
△			
△			

PBSJ an Atkins company TBPE REG. # F-474

Texas Department of Transportation
Austin District

©2011 by TxDOT

SH 45 / O'CONNOR DRIVE SIGNING LAYOUT O'CONNOR DRIVE STA 81+00 TO 88+00

SCALE: 1"=100' SHEET 1 OF 1

DESIGNED: RVP	FED. RD DIV. No.	STATE	PROJECT No.			HIGHWAY No.
CHECKED: SED	6	TEXAS				LP 1/SH 45

DRAWN: RVP	STATE DISTRICT	COUNTY	CONTROL No.	SECTION No.	JOB No.	SHEET No.
CHECKED: SED	AUSTIN	WILLIAMSON	0683	06	027	600

PLOT DRIVER: RD*11x17*PDF.plt
PEN TABLE: plotordr*ocon.tbl
FILE: r:\trans-design\o'connor\cadd\SNS\OC45SGN11.dgn

SIGN NO: L1
STA: 349+55.00
LAYOUT: 1 OF 10

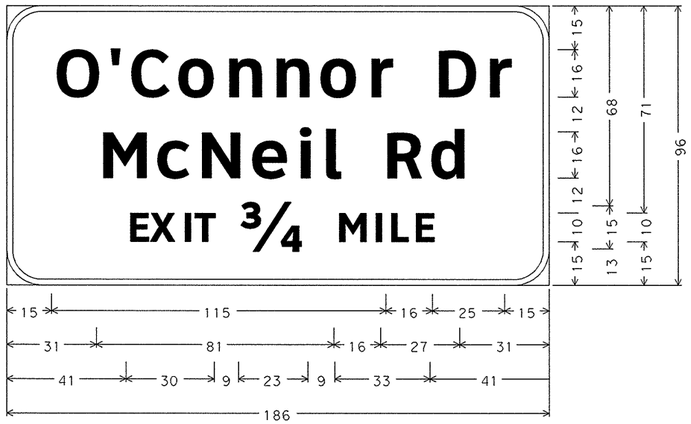

12" Radius, 2" Border, White on Green;
[O'Connor] ClearviewHwy-5-W-R;
[Dr] ClearviewHwy-5-W-R;
[McNeil Rd] ClearviewHwy-5-W-R;
[EXIT 3/4 MILE] ClearviewHwy-5-W-R;

SIGN NO: L2
STA: 375+95.00
LAYOUT: 1 OF 10

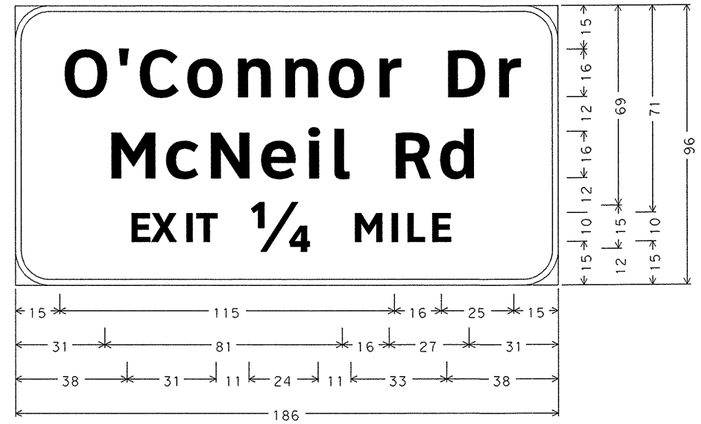

12" Radius, 2" Border, White on Green;
[O'Connor] ClearviewHwy-5-W-R;
[Dr] ClearviewHwy-5-W-R;
[McNeil Rd] ClearviewHwy-5-W-R;
[EXIT 1/4 MILE] ClearviewHwy-5-W-R;

SIGN NO: OB-1
STA: 389+00.00
LAYOUT: 2 OF 10

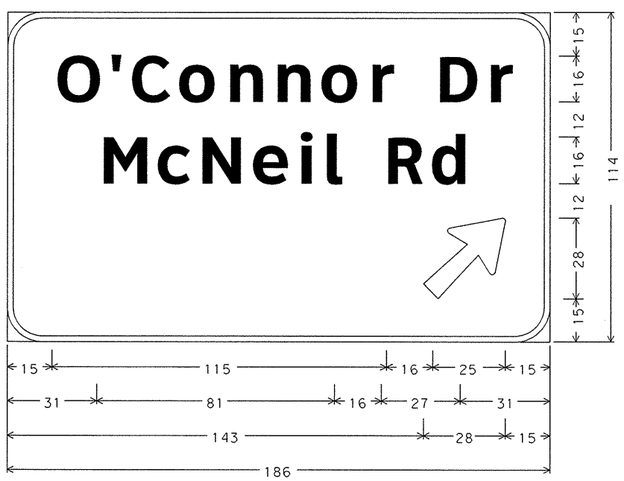

12" Radius, 2" Border, White on Green;
[O'Connor] ClearviewHwy-5-W-R;
[Dr] ClearviewHwy-5-W-R;
[McNeil Rd] ClearviewHwy-5-W-R; Arrow A-3 - 36" 45 Degrees;

SIGN NO: OB-4
STA: 522+00.00
LAYOUT: 10 OF 10

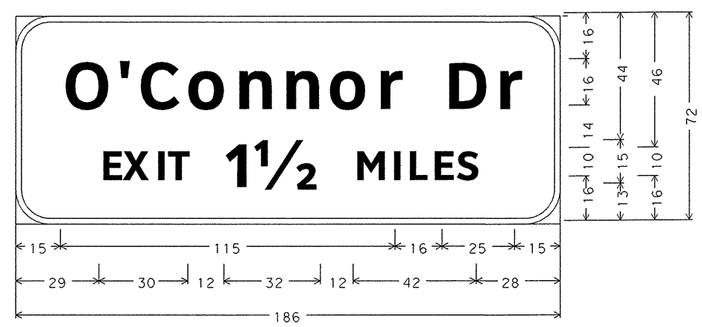

12" Radius, 2" Border, White on Green;
[O'Connor] ClearviewHwy-5-W-R;
[Dr] ClearviewHwy-5-W-R;
[EXIT 1 1/2 MILES] ClearviewHwy-5-W-R;

STATE OF TEXAS
RENE U. GARZA
65409
REGISTERED
PROFESSIONAL ENGINEER

Rene U Garza PE
6/3/11

REV. No.	DATE	REVISION	BY
△			
△			
△			

PBSJ
an Atkins company
TBPE REG. # F-474

Texas Department of Transportation
Austin District
©2011 by TxDOT

SH 45 / O'CONNOR DRIVE LARGE SIGN DETAILS

SCALE: NTS
SHEET 1 OF 3

DESIGNED: RVP	FED. RD DIV. No.	STATE	PROJECT No.			HIGHWAY No.	
CHECKED: SED	6	TEXAS				LP 1/SH 45	
DRAWN: RVP	STATE DISTRICT	COUNTY	CONTROL No.	SECTION No.	JOB No.	SHEET No.	
CHECKED: SED	AUSTIN	WILLIAMSON	0683	06	027	601	

DATE: 6/2/2011 TIME: 3:53:23 PM
PLOT DRIVER: RD*11x17*PDF.plt
PEN TABLE: plotdrv*ocon.tbl
FILE: r:\trans-design\o'connor\cadd\SNS\OC45SGN12.dgn

SIGN NO: OC 1
STA: 445+40.00
LAYOUT: 8 OF 10

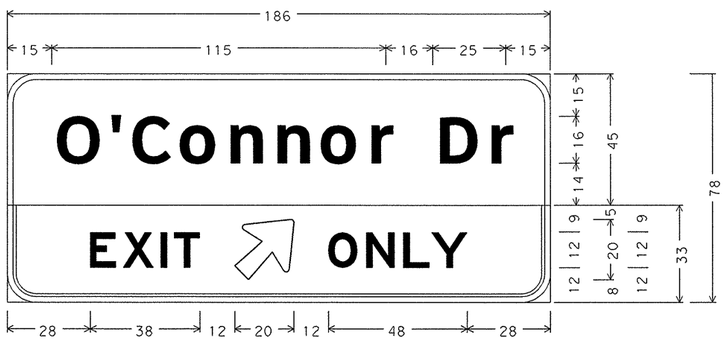

12" Radius, 2" Border, White on Green;
[O'Connor] ClearviewHwy-5-W-R;
[Dr] ClearviewHwy-5-W-R;
E11-1a;
1" Inner border Green, 12" Radius, 2" Outer border, White on Yellow;
[EXIT] Black E; Arrow B-3 - 25" 45 Degree Black;
[ONLY] Black E;

SIGN NO: OC 2
STA: 1323+80.00
LAYOUT: 9 OF 10

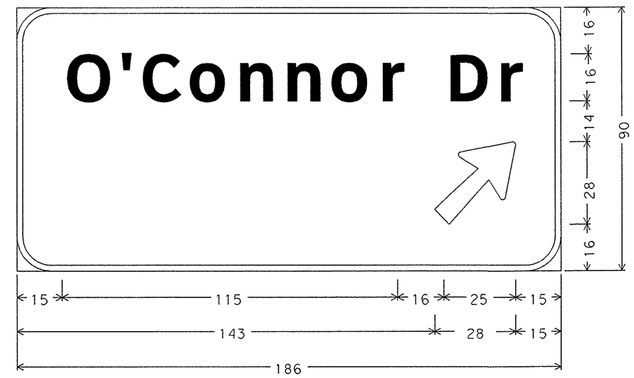

12" Radius, 2" Border, White on Green;
[O'Connor] ClearviewHwy-5-W-R;
[Dr] ClearviewHwy-5-W-R; Arrow A-3 - 36" 45 Degrees;

SIGN NO: OC 3
STA: 460+00.00
LAYOUT: 9 OF 10

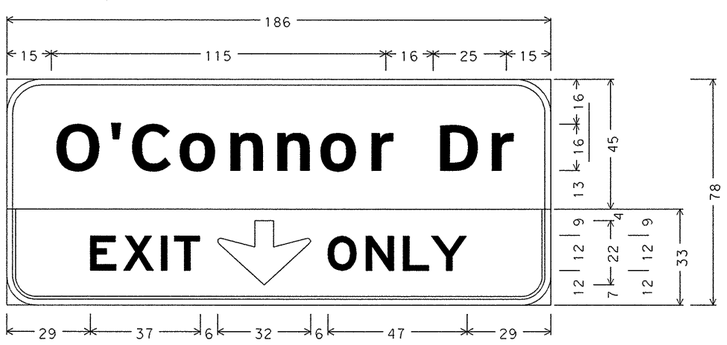

12" Radius, 2" Border, White on Green;
[O'Connor] ClearviewHwy-5-W-R;
[Dr] ClearviewHwy-5-W-R;
E11-1;
1" Inner border Green, 12" Radius, 2" Outer border, White on Yellow;
[EXIT] Black E; Down Arrow C - 22" 270 Degree Black;
[ONLY] Black E;

SIGN NO: OC 4
STA: 1310+60.00
LAYOUT: 9 OF 10

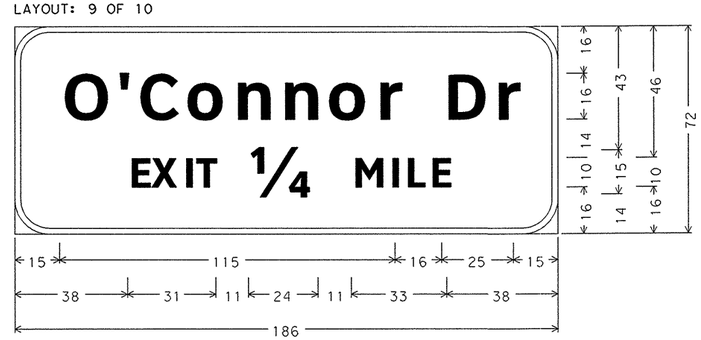

12" Radius, 2" Border, White on Green;
[O'Connor] ClearviewHwy-5-W-R;
[Dr] ClearviewHwy-5-W-R;
[EXIT 1/4 MILE] ClearviewHwy-5-W-R;

STATE OF TEXAS
RENE U. GARZA
65409
REGISTERED
PROFESSIONAL ENGINEER
Rene U. Garza PE
4/11/11

REV. No.	DATE	REVISION	BY
△			
△			
△			

PBSJ
an Atkins company TBPE REG. # F-474

Texas Department of Transportation
Austin District
©2011 by TxDOT

SH 45 / O'CONNOR DRIVE
LARGE SIGN
DETAILS

SCALE: NTS SHEET 2 OF 3

DESIGNED: RVP	FED. RD DIV. NO.	STATE	PROJECT No.			HIGHWAY No.	
CHECKED: SED	6	TEXAS				LP 1/SH 45	
DRAWN: RVP	STATE DISTRICT	COUNTY		CONTROL No.	SECTION No.	JOB No.	SHEET No.
CHECKED: SED	AUSTIN	WILLIAMSON		0683	06	027	602

DATE: 4/11/2011 TIME: 11:00:11 AM

PLOT DRIVER: RD*11x17*PDF.plt
PEN TABLE: plotordr*ocon.tbl
FILE: r:\trans-design\o'connor\cadd\SNS\OC45SGN13.dgn

SIGN NO: OB-2
STA: 400+00.00
LAYOUT: 3 OF 10

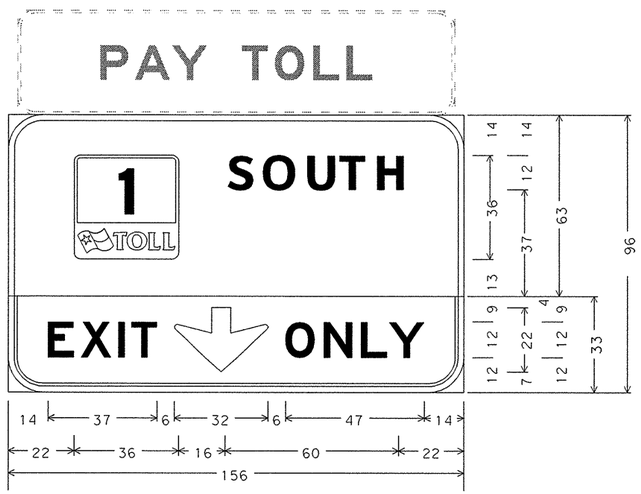

12" Radius, 2" Border, White on Green;
State Highway 1 M1-6TT1; [SOUTH] ClearviewHwy-5-W-R;
E11-1;
1" Inner border Green, 12" Radius, 2" Outer border, White on Yellow;
[EXIT] Black E;
Down Arrow C - 22" 270 Degrees Black;
[ONLY] Black E;

SIGN NO: OB-3
STA: 410+28.95
LAYOUT: 4 OF 10

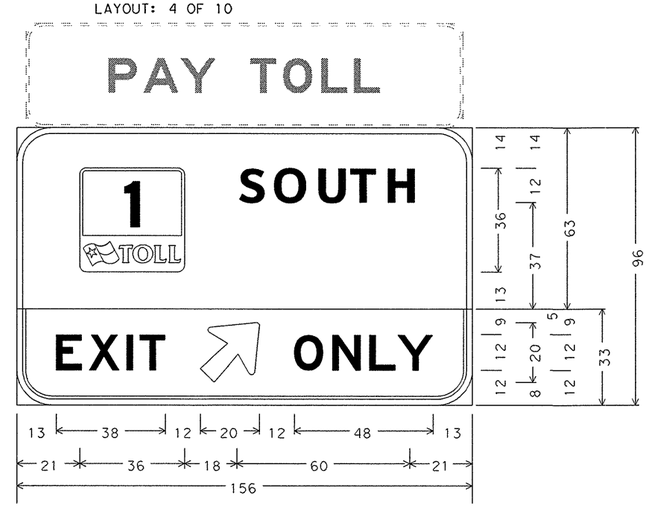

12" Radius, 2" Border, White on Green;
State Highway 1 M1-6TT1; [SOUTH] ClearviewHwy-5-W-R;
E11-1a;
1" Inner border Green, 12" Radius, 2" Outer border, White on Yellow;
[EXIT] Black E; Arrow B-3 - 25" 45 Degrees Black;
[ONLY] Black E;

STATE OF TEXAS
RENE U. GARZA
65409
REGISTERED
PROFESSIONAL ENGINEER

Rene U Garza PE
4/11/11

REV. NO.	DATE	REVISION	BY
△			
△			
△			

PBSJ
an Atkins company TBPE REG. # F-474

Texas Department of Transportation
Austin District
©2011 by TxDOT

SH 45 / O'CONNOR DRIVE LARGE SIGN DETAILS

SCALE: NTS SHEET 3 OF 3

DESIGNED: RVP	FED. RD DIV. No.	STATE	PROJECT No.			HIGHWAY No.
CHECKED: SED	6	TEXAS				LP 1/SH 45
DRAWN: RVP	STATE DISTRICT	COUNTY	CONTROL No.	SECTION No.	JOB No.	SHEET No.
CHECKED: SED	AUSTIN	WILLIAMSON	0683	06	027	603

DATE: 4/11/2011 TIME: 11:00:13 AM

PLOT DRIVER: RD*11x17*PDF.plt
PEN TABLE: plotordr*ocon.tbl
FILE: r:\trans-design\o'connor\cadd\SNS\OC45SGN14.dgn

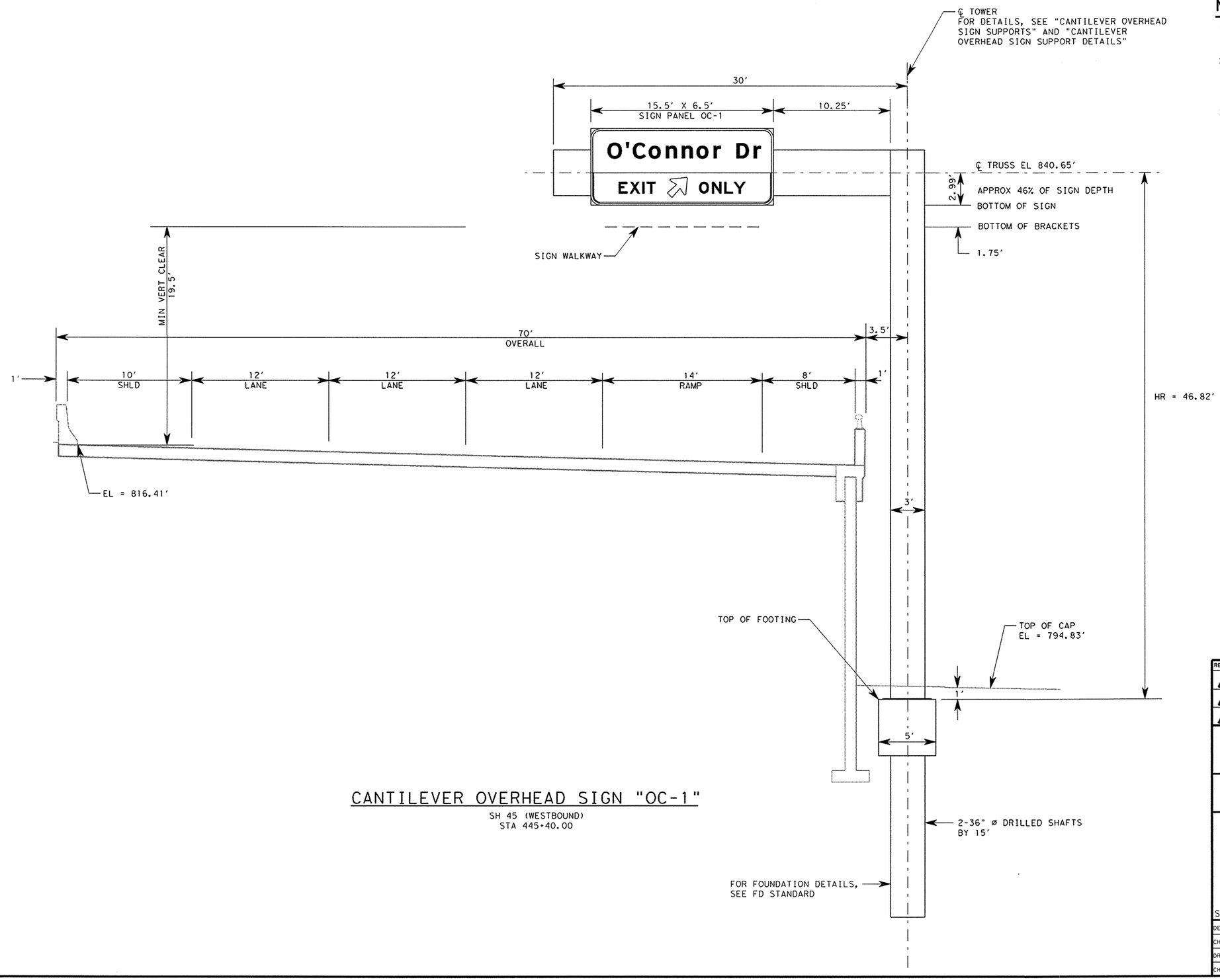

CANTILEVER OVERHEAD SIGN "OC-1"

SH 45 (WESTBOUND)
STA 445+40.00

NOTES:

1. ELEVATIONS TO BE VERIFIED PRIOR TO FABRICATION OF CANTILEVER SUPPORT OVERHEAD SIGN.
2. CANTILEVER OVERHEAD SIGN SUPPORT DESIGNED ON 30' STRUCTURE LENGTH. SEE "COSS & OSB-SZ OVERHEAD SIGN SUPPORT DETAILS" AUSTIN DISTRICT STANDARD FOR TRUSS DETAILS.
3. CONCRETE COLUMN TO BE PAID FOR UNDER ITEM 420.

STATE OF TEXAS
RENE U. GARZA
65409
REGISTERED
PROFESSIONAL ENGINEER

Rene U Garza PE
4/11/11

REV. No.	DATE	REVISION	BY
△			
△			
△			

PBSJ
an Atkins company
TBPE REG. # F-474

Texas Department of Transportation
Austin District
©2011 by TxDOT

SH 45 / O'CONNOR DRIVE SIGN ELEVATIONS

SCALE: NTS
SHEET 1 OF 8

DESIGNED: RVP	FED. RD DIV. No.	STATE	PROJECT No.			HIGHWAY No.
CHECKED: SED	6	TEXAS				LP 1/SH 45
DRAWN: RVP	STATE DISTRICT	COUNTY	CONTROL No.	SECTION No.	JOB No.	SHEET No.
CHECKED: SED	AUSTIN	WILLIAMSON	0683	06	027	604

DATE: 4/11/2011 TIME: 11:00:14 AM

PLOT DRIVER: RD*11x17*PDF.plt
PEN TABLE: plotordr*ocon.tbl
FILE: r:\trans-design\o'connor\cadd\SNS\OC45SGN15.dgn

DATE: 4/11/2011 TIME: 11:00:15 AM

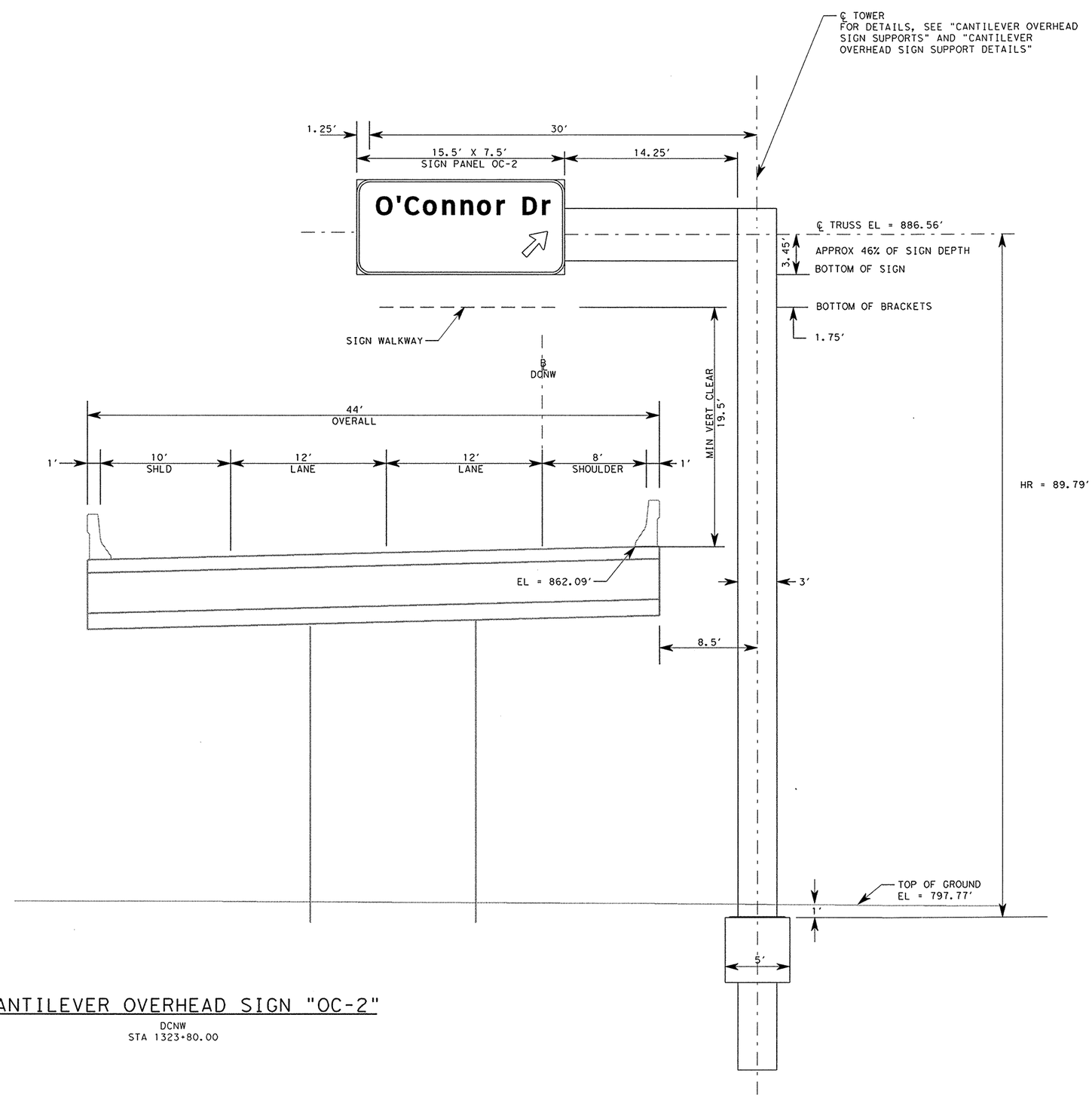

CANTILEVER OVERHEAD SIGN "OC-2"

DCNW
STA 1323+80.00

NOTES:

1. ELEVATIONS TO BE VERIFIED PRIOR TO FABRICATION OF CANTILEVER SUPPORT OVERHEAD SIGN.
2. CANTILEVER OVERHEAD SIGN SUPPORT DESIGNED ON 30' STRUCTURE LENGTH. SEE "COSS & OSB-SZ OVERHEAD SIGN SUPPORT DETAILS" AUSTIN DISTRICT STANDARD FOR TRUSS DETAILS.
3. CONCRETE COLUMN TO BE PAID FOR UNDER ITEM 420.

STATE OF TEXAS
RENE U. GARZA
65409
REGISTERED PROFESSIONAL ENGINEER

Rene U Garza PE
4/11/11

REV. NO.	DATE	REVISION	BY
△			
△			
△			

PBSJ
an Atkins company
TBPE REG. # F-474

Texas Department of Transportation
Austin District
©2011 by TxDOT

SH 45 / O'CONNOR DRIVE SIGN ELEVATIONS

SCALE: NTS
SHEET 2 OF 8

DESIGNED: RVP	FED. RD DIV. No.	STATE	PROJECT No.			HIGHWAY No.	
CHECKED: SED	6	TEXAS				LP 1/SH 45	
DRAWN: RVP	STATE DISTRICT	COUNTY	CONTROL No.	SECTION No.	JOB No.	SHEET No.	
CHECKED: SED	AUSTIN	WILLIAMSON	0683	06	027	605	

PLOT DRIVER: RD*11x17*PDF.plt
PEN TABLE: plotordr*ocon.tbl
FILE: r:\trans-design\o'connor\cadd\SNS\OC45SGN16.dgn

NOTES:

1. ELEVATIONS TO BE VERIFIED PRIOR TO FABRICATION OF CANTILEVER SUPPORT OVERHEAD SIGN.
2. CANTILEVER OVERHEAD SIGN SUPPORT DESIGNED ON 30' STRUCTURE LENGTH. SEE "COSS & OSB-SZ OVERHEAD SIGN SUPPORT DETAILS" AUSTIN DISTRICT STANDARD FOR TRUSS DETAILS.
3. CONCRETE COLUMN TO BE PAID FOR UNDER ITEM 420.

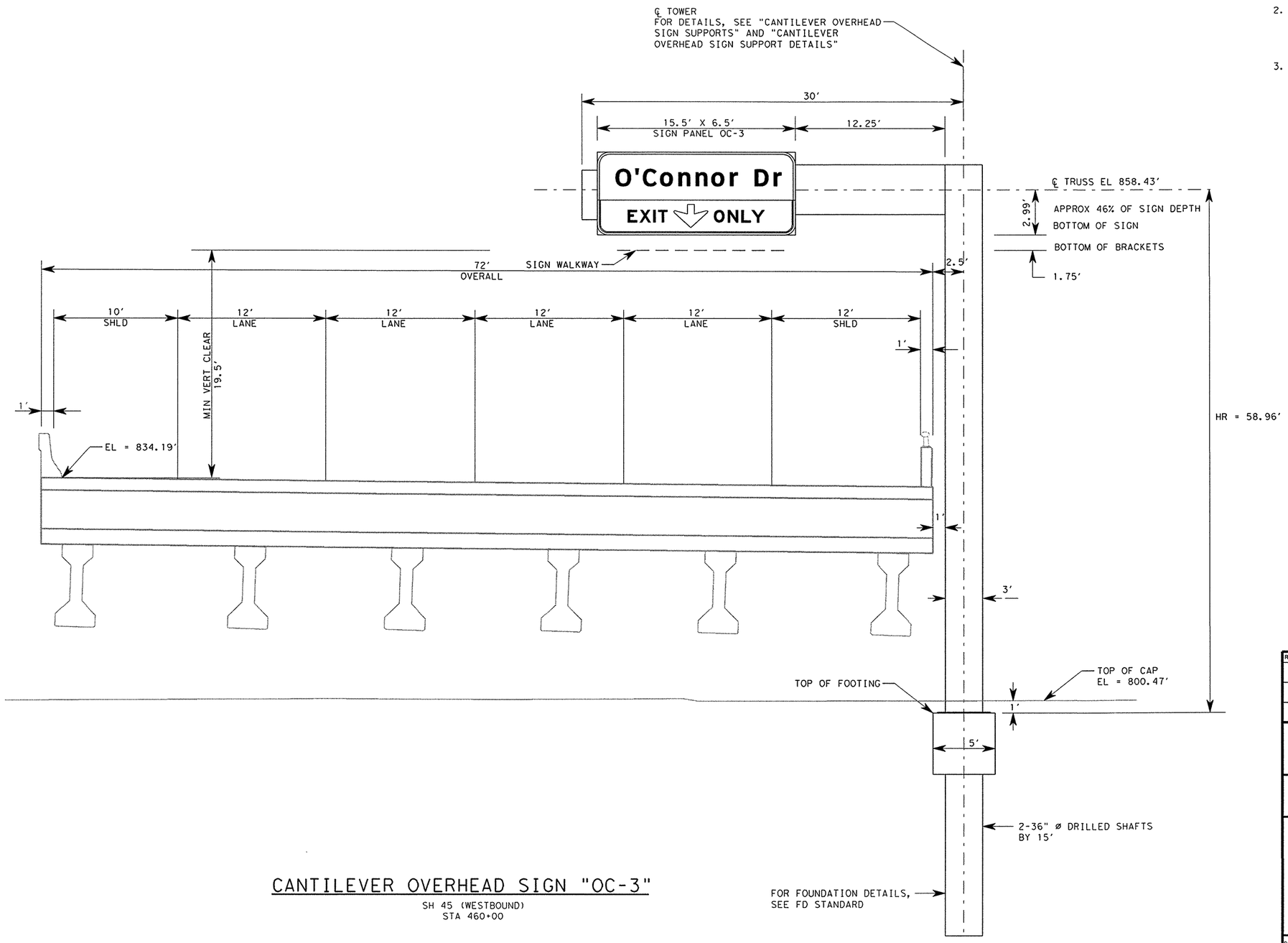

CANTILEVER OVERHEAD SIGN "OC-3"

SH 45 (WESTBOUND)
STA 460+00

STATE OF TEXAS
RENE U. GARZA
65409
REGISTERED
PROFESSIONAL ENGINEER

Rene U Garza PE
4/11/11

REV. NO.	DATE	REVISION	BY
△			
△			
△			

PBSJ
an Atkins company
TBPE REG. # F-474

Texas Department of Transportation
Austin District
©2011 by TxDOT

SH 45 / O'CONNOR DRIVE SIGN ELEVATIONS

SCALE: NTS

SHEET 3 OF 8

DESIGNED: RVP	FED. RD DIV. No.	STATE	PROJECT No.			HIGHWAY No.	
CHECKED: SED	6	TEXAS				LP 1/SH 45	
DRAWN: RVP	STATE DISTRICT	COUNTY	CONTROL No.	SECTION No.	JOB No.	SHEET No.	
CHECKED: SED	AUSTIN	WILLIAMSON	0683	06	027	606	

DATE: 4/11/2011 TIME: 11:00:16 AM
PLOT DRIVER: RD*11x17*PDF.plt
PEN TABLE: plotord*ocon.tbl
FILE: r:\trans-design\o'connor\cadd\SNS\OC45SGN17.dgn

NOTES:

1. ELEVATIONS TO BE VERIFIED PRIOR TO FABRICATION OF CANTILEVER SUPPORT OVERHEAD SIGN.
2. CANTILEVER OVERHEAD SIGN SUPPORT DESIGNED ON 30' STRUCTURE LENGTH. SEE "COSS & OSB-SZ OVERHEAD SIGN SUPPORT DETAILS" AUSTIN DISTRICT STANDARD FOR TRUSS DETAILS.
3. CONCRETE COLUMN TO BE PAID FOR UNDER ITEM 420.

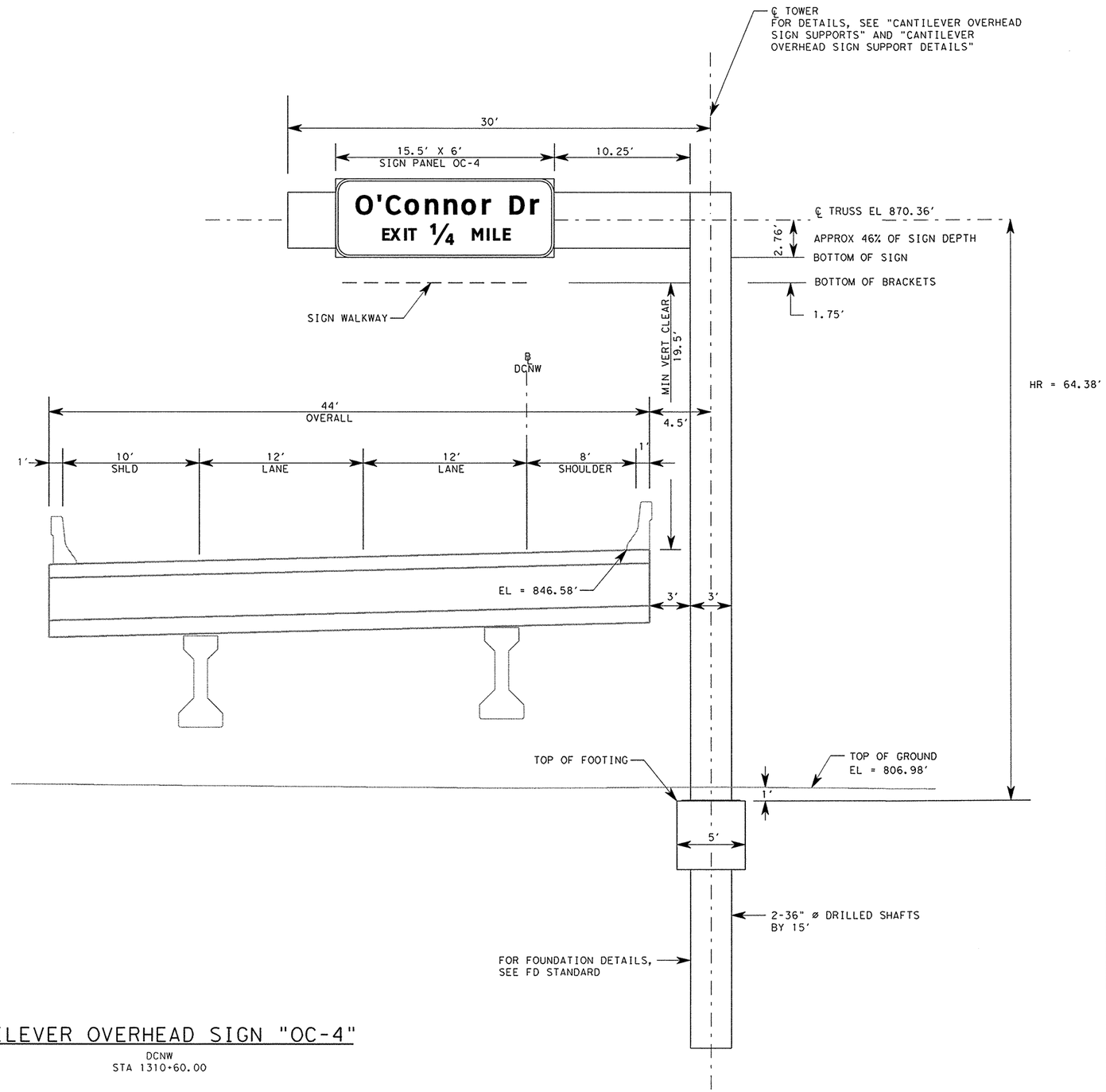

CANTILEVER OVERHEAD SIGN "OC-4"

DCNW
STA 1310+60.00

STATE OF TEXAS
RENE U. GARZA
65409
REGISTERED PROFESSIONAL ENGINEER

Rene U Garza PE
4/11/11

REV. NO.	DATE	REVISION	BY
△			
△			
△			

PBSJ
an Atkins company
TBPE REG. # F-474

Texas Department of Transportation
Austin District
©2011 by TxDOT

SH 45 / O'CONNOR DRIVE SIGN ELEVATIONS

SCALE: NTS
SHEET 4 OF 8

DESIGNED: RVP	FED. RD DIV. No.	STATE	PROJECT No.			HIGHWAY No.
CHECKED: SED	6	TEXAS				LP 1/SH 45
DRAWN: RVP	STATE DISTRICT	COUNTY	CONTROL No.	SECTION No.	JOB No.	SHEET No.
CHECKED: SED	AUSTIN	WILLIAMSON	0683	06	027	607

DATE: 4/11/2011 TIME: 11:00:17 AM
PLOT DRIVER: RD*11x17*PDF.plt
PEN TABLE: plotordr*ocon.tbl
FILE: r:\trans-design\o'connor\cadd\SNS\OC45SGN18.dgn

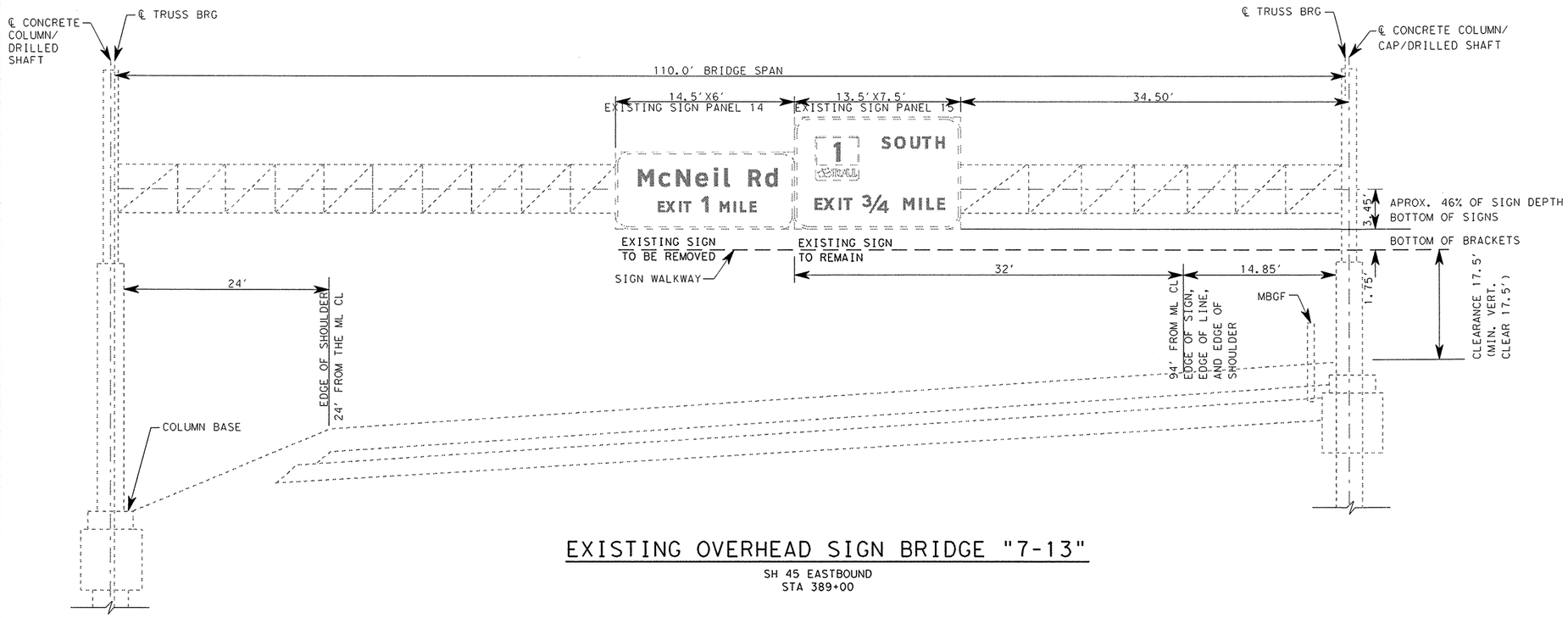

EXISTING OVERHEAD SIGN BRIDGE "7-13"

SH 45 EASTBOUND
STA 389+00

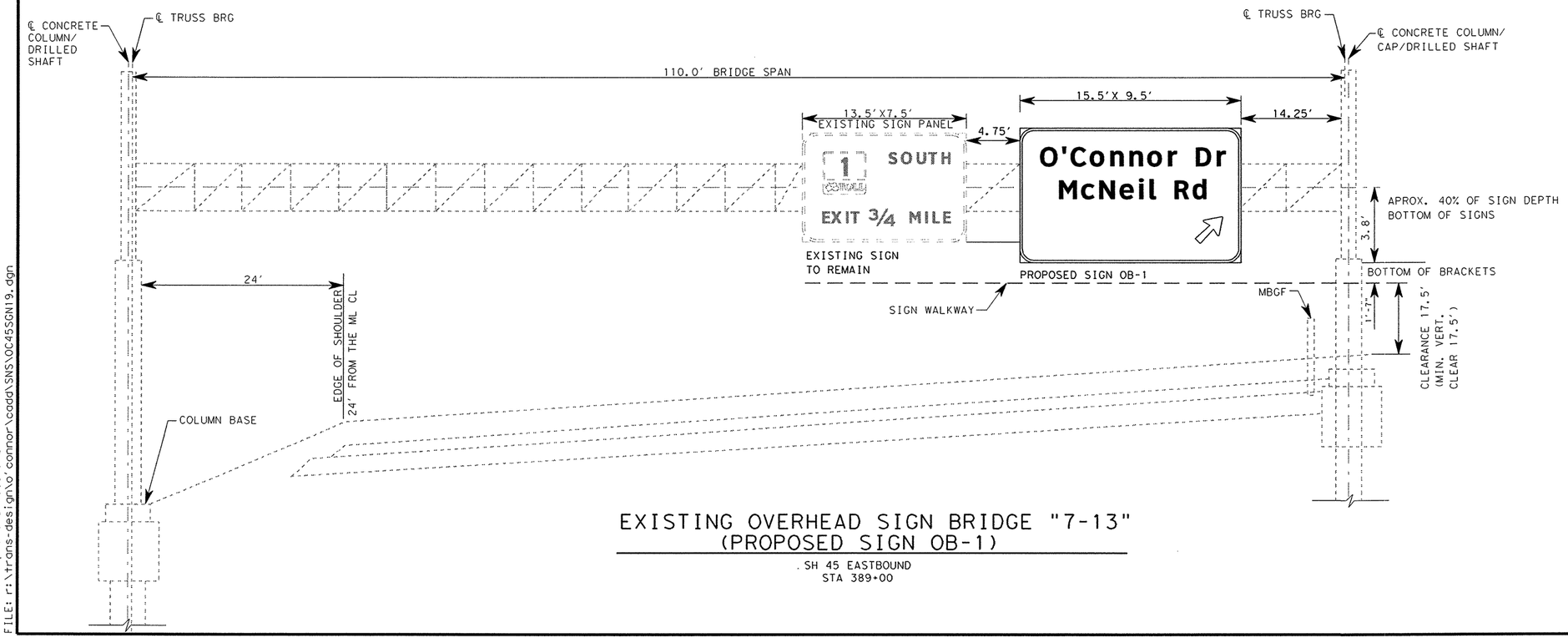

EXISTING OVERHEAD SIGN BRIDGE "7-13"
(PROPOSED SIGN OB-1)

SH 45 EASTBOUND
STA 389+00

NOTES:

1. THE CONTRACTOR SHALL ADD A NEW SIGN L-3 AT EB SH-45 STATION 389+00.
2. THE CONTRACTOR SHALL CENTER PROPOSED SIGN L-3 OVER THE OUTERMOST TRAVEL LANE.
3. THE CONTRACTOR SHOULD REMOVE EXISTING SIGN 14.
4. THE CONTRATOR WILL PROVIDE AT LEAST 17.5 FT CLEARANCE BETWEEN THE BOTTOM EDGE OF THE SIGN AND THE PAVEMENT SURFACE.

STATE OF TEXAS
RENE U. GARZA
65409
REGISTERED PROFESSIONAL ENGINEER

Rene U Garza PE
4/11/11

REV. No.	DATE	REVISION	BY
△			
△			
△			

PBSJ an Atkins company TBPE REG. # F-474

Texas Department of Transportation
Austin District
©2011 by TxDOT

SH 45 / O'CONNOR DRIVE SIGN ELEVATIONS

SCALE: NTS SHEET 5 OF 8

DESIGNED: RVP	FED. RD DIV. No.	STATE	PROJECT No.			HIGHWAY No.
CHECKED: SED	6	TEXAS				LP 1/SH 45
DRAWN: RVP	STATE DISTRICT	COUNTY	CONTROL No.	SECTION No.	JOB No.	SHEET No.
CHECKED: SED	AUSTIN	WILLIAMSON	0683	06	027	608

TIME: 11:00:18 AM
DATE: 4/11/2011

PLOT DRIVER: RD*11x17*PDF.plt
PEN TABLE: plotordr*ocon.tbl
FILE: r:\trans-design\o'connor\cadd\SNS\OC45SGN19.dgn

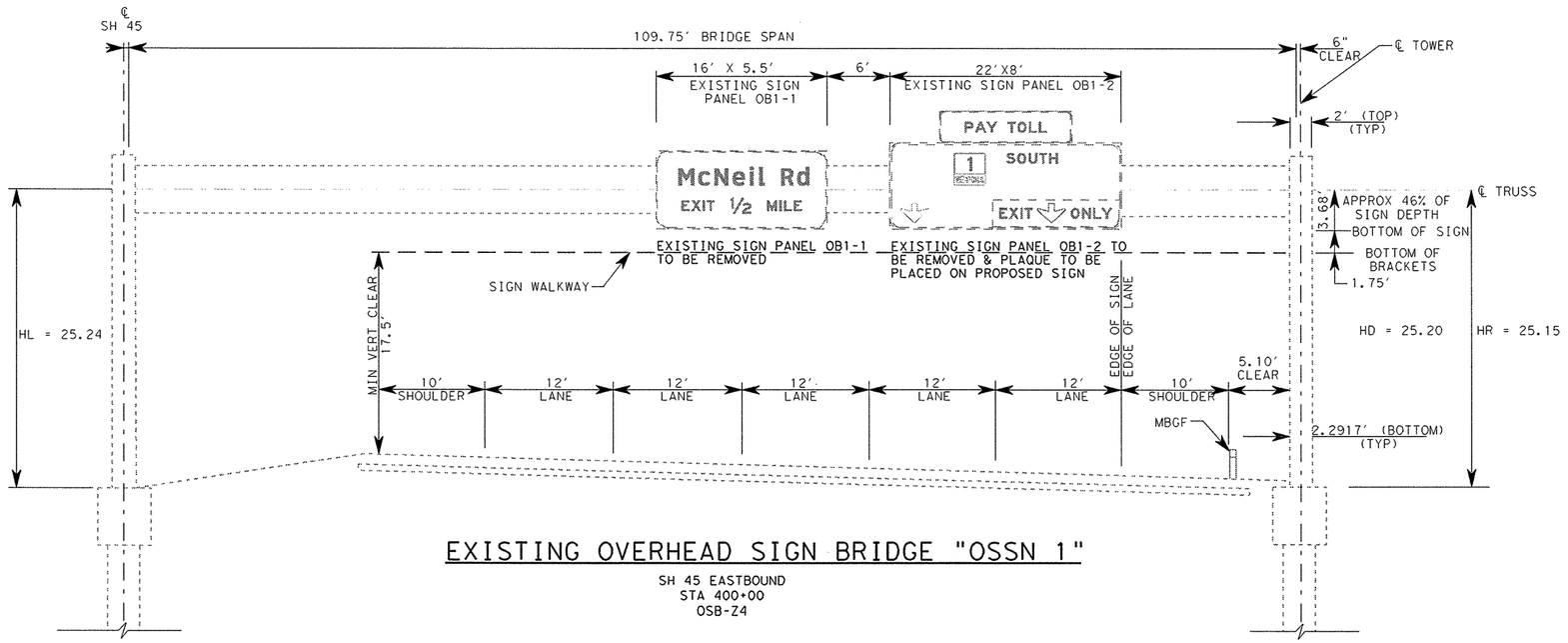

EXISTING OVERHEAD SIGN BRIDGE "OSSN 1"

SH 45 EASTBOUND
STA 400+00
OSB-Z4

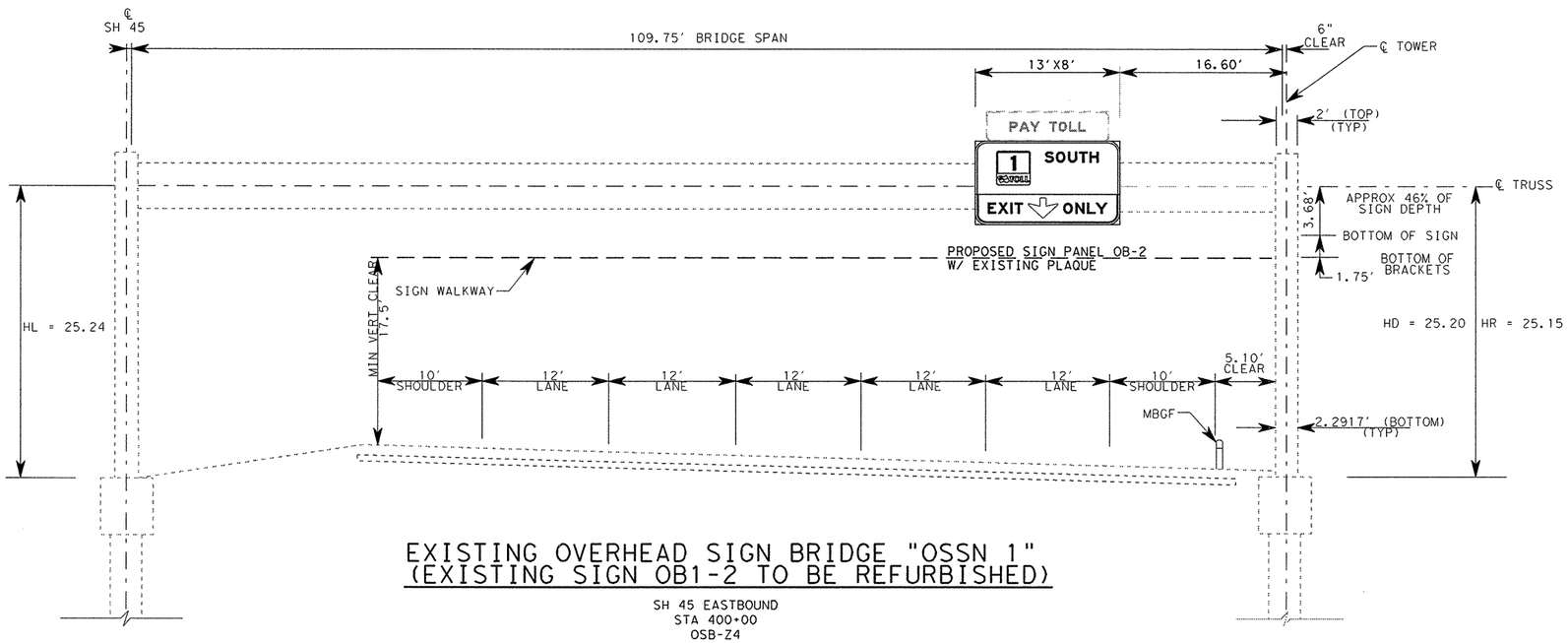

EXISTING OVERHEAD SIGN BRIDGE "OSSN 1" (EXISTING SIGN OB1-2 TO BE REFURBISHED)

SH 45 EASTBOUND
STA 400+00
OSB-Z4

NOTES:

1. THE CONTRACTOR SHALL REMOVE THE EXISTING SIGN OB1-1 AT EB SH-45 STATION 400+00.
2. THE CONTRACTOR SHALL REFRUBISH THE EXISTING SIGN OB1-2 ON THE EXISTING OVERHEAD SIGN STRUCTURE AT EB SH-45 STATION 400+00.
3. THE CONTRACTOR SHALL CENTER EXISTING SIGN OB1-2 OVER THE RIGHT MOST TRAVEL LANE.
4. THE CONTRATOR WILL PROVIDE AT LEAST 19.25 FT CLEARANCE BETWEEN THE BOTTOM EDGE OF THE SIGN AND THE PAVEMENT SURFACE.

STATE OF TEXAS
RENE U. GARZA
65409
REGISTERED
PROFESSIONAL ENGINEER

Rene U Garza PE
4/11/11

REV. No.	DATE	REVISION	BY
△			
△			
△			

PBSJ
an Atkins company
TBPE REG. # F-474

Texas Department of Transportation
Austin District
©2011 by TxDOT

SH 45 / O'CONNOR DRIVE SIGN ELEVATIONS

SCALE: NTS
SHEET 6 OF 8

DESIGNED: RVP	FED. RD DIV. No.	STATE	PROJECT No.			HIGHWAY No.	
CHECKED: SED	6	TEXAS				LP 1/SH 45	
DRAWN: RVP	STATE DISTRICT	COUNTY	CONTROL No.	SECTION No.	JOB No.	SHEET No.	
CHECKED: SED	AUSTIN	WILLIAMSON	0683	06	027	609	

DATE: 4/11/2011 TIME: 11:00:20 AM
PLOT DRIVER: RD*11x17*PDF.plt
PEN TABLE: plotordr*ocon.tbl
FILE: r:\trans-design\o'connor\cadd\SNS\OC45SGN20.dgn

NOTES:

1. ELEVATIONS TO BE FIELD VERIFIED PRIOR TO INSTALLATION ON BRIDGE.
2. CONTRACTOR SHALL CENTER BOTH EXISTING AND PROPOSED SIGNS OR AS INDICATED BY ENGINEER.
3. THE CONTRATOR WILL PROVIDE AT LEAST 16.75 FT CLEARANCE BETWEEN THE BOTTOM EDGE OF THE SIGN AND THE PAVEMENT SURFACE.

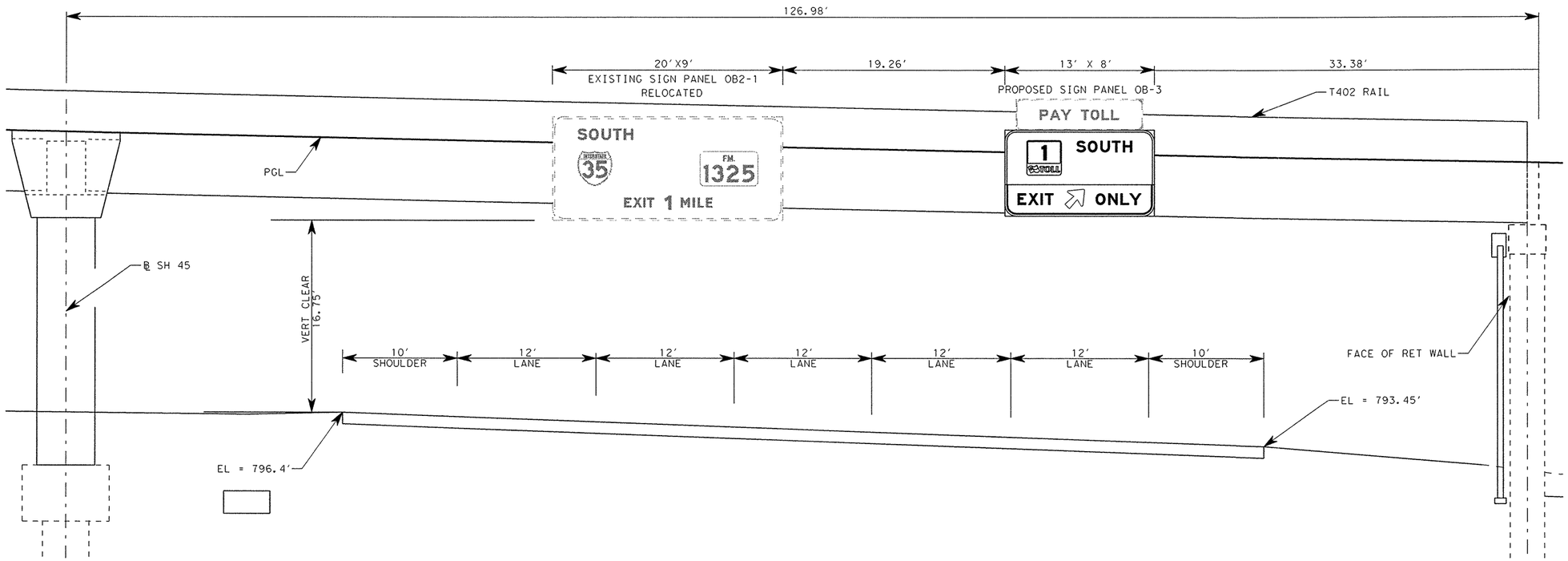

STATE OF TEXAS
RENE U. GARZA
65409
REGISTERED PROFESSIONAL ENGINEER

Rene U Garza PE
4/11/11

PROPOSED O'CONNOR DRIVE BRIDGE
(EXISTING SIGN OB2-1 TO BE RELOCATED FROM STA 413+00)
(PROPOSED SIGN OB-3)

SH 45 EASTBOUND
STA 410+28.95

REV. No.	DATE	REVISION	BY
△			
△			
△			

PBSJ an Atkins company TBPE REG. # F-474

Texas Department of Transportation
Austin District
©2011 by TxDOT

SH 45 / O'CONNOR DRIVE SIGN ELEVATIONS

SCALE: NTS

SHEET 7 OF 8

DESIGNED: RVP	FED. RD DIV. No.	STATE	PROJECT No.			HIGHWAY No.	
CHECKED: SED	6	TEXAS				LP 1/SH 45	
DRAWN: RVP	STATE DISTRICT	COUNTY	CONTROL No.	SECTION No.	JOB No.	SHEET No.	
CHECKED: SED	AUSTIN	WILLIAMSON	0683	06	027	610	

DATE: 4/11/2011 TIME: 11:00:21 AM
PLOT DRIVER: RD*11x17*PDF.plt
PEN TABLE: plotordr*ocon.tbl
FILE: r:\trans-design\o'connor\cadd\SNS\OC45SGN21.dgn

NOTES:

1. THE CONTRACTOR SHALL ADD A NEW SIGN L-6 AT WB SH-45 STATION 522+00.
2. THE CONTRACTOR SHALL CENTER PROPOSED SIGN L-6 OVER THE TWO LEFT TRAVEL LANE.
3. THE CONTRATOR WILL PROVIDE AT LEAST 19.5 FT CLEARANCE BETWEEN THE BOTTOM EDGE OF THE SIGN AND THE PAVEMENT SURFACE.

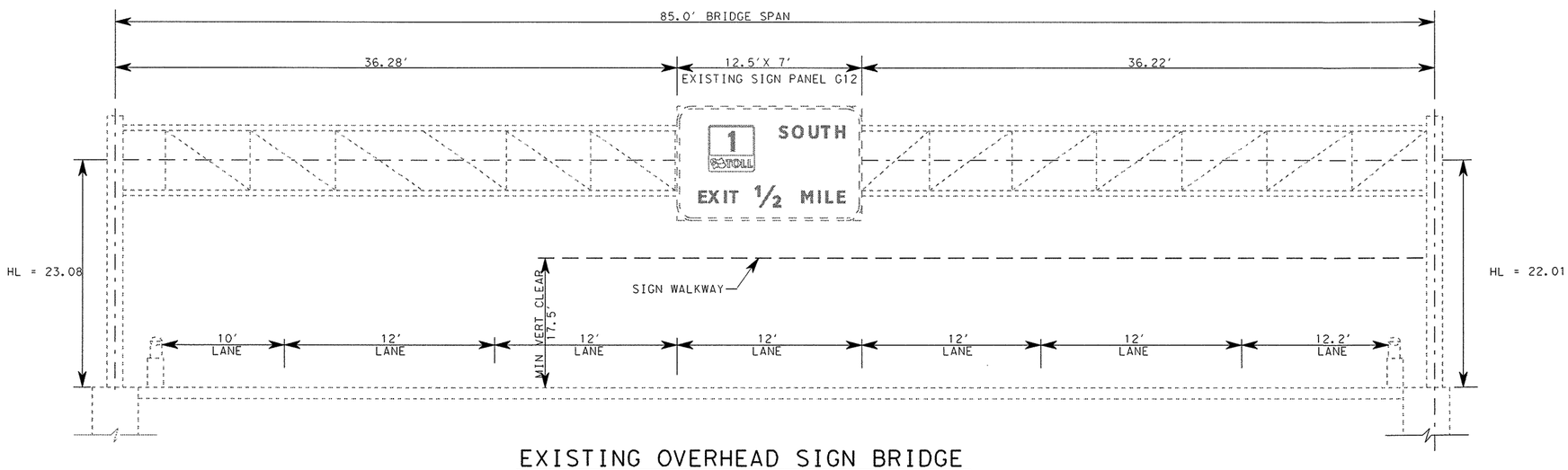

EXISTING OVERHEAD SIGN BRIDGE

SH 45 WESTBOUND
STA 522+00

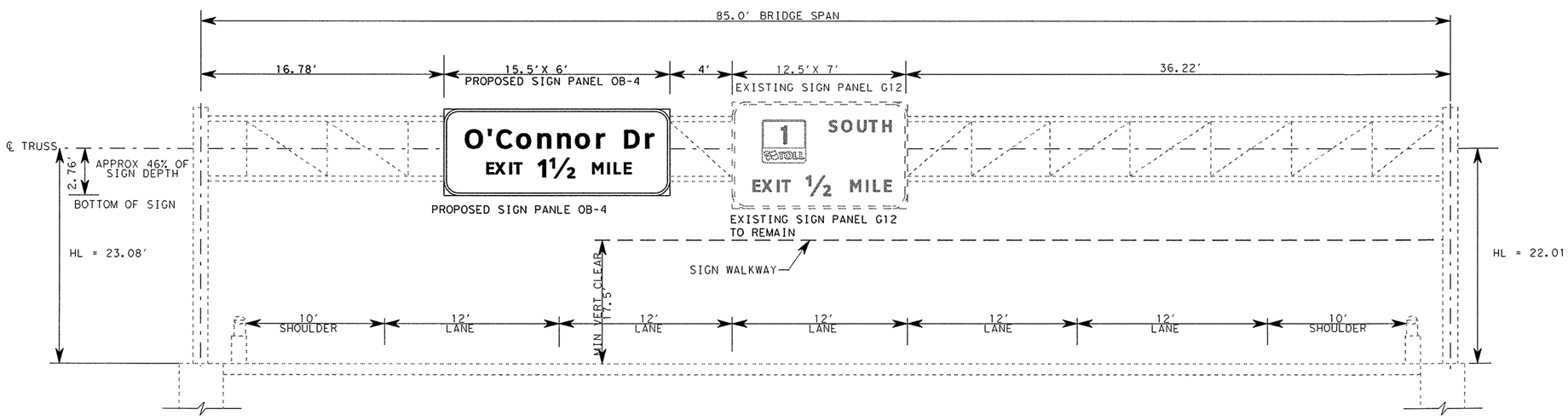

EXISTING OVERHEAD SIGN BRIDGE (PROPOSED NEW SIGN OB-4)

SH 45 WESTBOUND
STA 522+00

STATE OF TEXAS
RENE U. GARZA
65409
REGISTERED PROFESSIONAL ENGINEER

Rene U. Garza PE
4/11/11

REV. No.	DATE	REVISION	BY
△			
△			
△			

PBSJ
an Atkins company
TBPE REG. # F-474

Texas Department of Transportation
Austin District
©2011 by TxDOT

SH 45 / O'CONNOR DRIVE SIGN ELEVATIONS

SCALE: NTS

SHEET 8 OF 8

DESIGNED: RVP	FED. RD DIV. No.	STATE	PROJECT No.			HIGHWAY No.	
CHECKED: SED	6	TEXAS				LP 1/SH 45	
DRAWN: RVP	STATE DISTRICT	COUNTY	CONTROL No.	SECTION No.	JOB No.	SHEET No.	
CHECKED: SED	AUSTIN	WILLIAMSON	0683	06	027	611	

DATE: 4/11/2011 TIME: 11:00:22 AM
PLOT DRIVER: RD*11x17*PDF.plt
PEN TABLE: plotordr*ocon.tbl
FILE: r:\trans-design\o'connor\cadd\SNS\OC45SGN22.dgn

DISCLAIMER: The use of this standard is governed by the "Texas Engineering Practice Act". No warranty of any kind is made by TxDOT for any purpose whatsoever. TxDOT assumes no responsibility for the conversion of this standard to other formats or for incorrect results or damages resulting from its use.

REQUIREMENTS FOR OVERHEAD GUIDE SIGNS

TYPICAL EXAMPLES

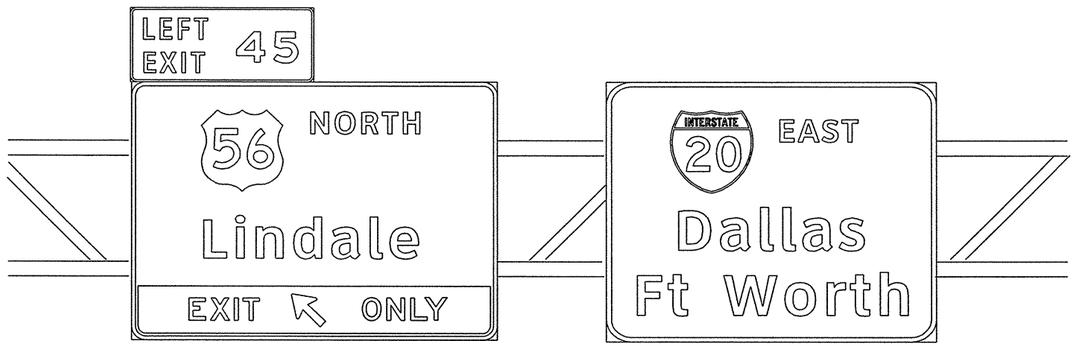

DEPARTMENTAL MATERIAL SPECIFICATIONS	
ALUMINUM SIGN BLANKS	DMS-7110
SIGN FACE MATERIALS	DMS-8300
FIBERGLASS SIGN SUBSTRATE	DMS-8305

OVERHEAD GUIDE SIGNS AND EXIT NUMBER PANELS

USAGE	COLOR	SIGN FACE MATERIAL
BACKGROUND	ALL	TYPE D SHEETING
LEGEND & BORDERS	WHITE	TYPE D SHEETING
LEGEND & BORDERS	BLACK	ACRYLIC NON-REFLECTIVE FILM

REQUIREMENTS FOR LARGE GROUND-MOUNTED GUIDE SIGNS

TYPICAL EXAMPLES

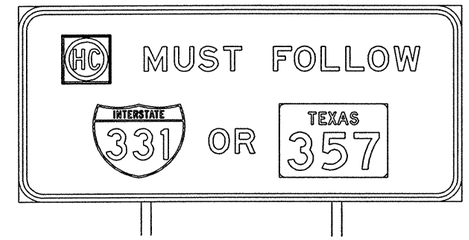

DEPARTMENTAL MATERIAL SPECIFICATIONS	
ALUMINUM SIGN BLANKS	DMS-7110
SIGN FACE MATERIALS	DMS-8300
FIBERGLASS SIGN SUBSTRATE	DMS-8305

LARGE GROUND-MOUNTED SIGNS AND EXIT NUMBER PANELS

USAGE	COLOR	SIGN FACE MATERIAL
BACKGROUND	ALL	TYPE C SHEETING
LEGEND & BORDERS	WHITE	TYPE D SHEETING
LEGEND & BORDERS	BLACK	ACRYLIC NON-REFLECTIVE FILM

GENERAL NOTES:

1. Signs to be furnished shall be as detailed elsewhere in the plans and/or as shown on sign summary sheet. Standard sign designs and arrow dimensions can be found in the "Standard Highway Sign Designs for Texas" (SHSD).
2. Black legend shall use the Federal Highway Administration (FHWA) Standard Highway Alphabets (B, C, D, E, Emod, or F).
   White legend shall use the Clearview Alphabet.
   The following Clearview fonts shall be used to replace the existing white FHWA lettering, when not specified in the SHSD or in the plans.
   - B CV-1W
   - C CV-2W
   - D CV-3W
   - E CV-4W
   - Emod CV-5WR
   - F CV-6W
3. Lateral spacing between letters and numerals shall conform with the SHSD, and any approved changes thereto. Lateral spacing of legend shall provide a balanced appearance when spacing is not shown.
4. Black legend shall be applied by screening process or cut-out acrylic non-reflective black film to background sheeting, or combination thereof.
5. White legend and borders for overhead guide signs shall be applied by screening process with transparent colored ink, transparent colored overlay film to white background sheeting or cut-out white sheeting to colored background sheeting, or combination thereof.
6. White legend and borders for large ground mounted guide signs shall be cut-out white sheeting applied to colored background sheeting.
7. Information regarding borders and radii for signs is found in the "Standard Highway Sign Designs for Texas". Dimensions shown and described for borders and corner radii on parent sign are nominal. Borders may vary in width as much as 1/2 inch. Corner radii above 3 inches may vary in width as much as 1 inch. Borders and corner radii within a parent sign must be of matching widths. The sign area outside the corner radius need not be trimmed or rounded if fabricated from an extruded material.
8. Sign substrate shall be any material that meets the Departmental Material Specification requirements of DMS-7110 or DMS-8305. Exit Number Panels attached above the parent sign shall be made with the same substrate and sheeting as the parent sign.
9. Mounting details of attachments to parent sign face are shown on Standard Plan Sheet TSR(5). Mounting details of exit number panels above parent sign are shown in the "SMD series" Standard Plan Sheets.
10. Background sheeting shall be applied to the substrate per sheeting manufacturer's recommendations. Sheeting will not be allowed to bridge the horizontal gap between panels.
11. Cut all legend, symbols, borders, and direct applied sign attachments at panel joints.

The Standard Highway Sign Designs for Texas (SHSD) can be found at the following website.

http://www.txdot.gov/publications/traffic.htm

Texas Department of Transportation
Traffic Operations Division

TYPICAL SIGN REQUIREMENTS

TSR(1)-08

©TxDOT October 2003

REVISIONS
12-03
9-08

DN: TXDOT	CK: TXDOT	DW: TXDOT	CK: TXDOT
CONT	SECT	JOB	HIGHWAY
0683	06	027	LP 1/SH 45
DIST	COUNTY		SHEET NO.
AUS	WILLIAMSON		612

DATE:
FILE:

DISCLAIMER: The use of this standard is governed by the "Texas Engineering Practice Act". No warranty of any kind is made by TxDOT for any purpose whatsoever. TxDOT assumes no responsibility for the conversion of this standard to other formats or for incorrect results or damages resulting from its use.

REQUIREMENTS FOR ATTACHMENTS TO GUIDE SIGNS

TYPICAL EXAMPLES

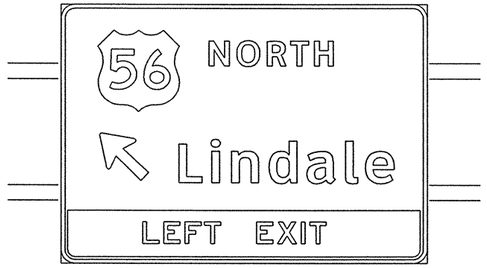

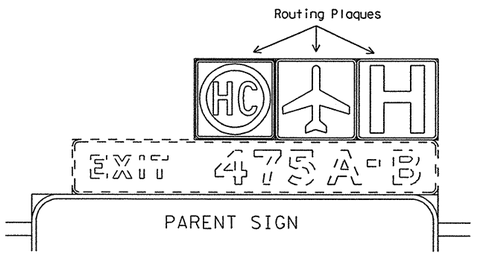

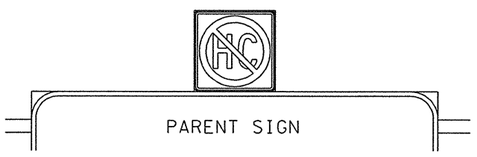

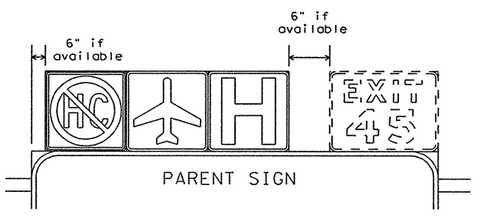

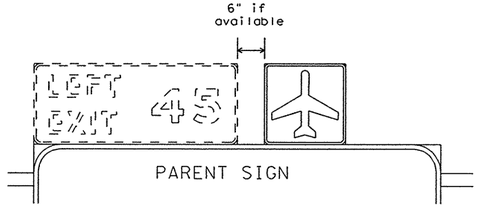

DEPARTMENTAL MATERIAL SPECIFICATIONS		
ALUMINUM SIGN BLANKS		DMS-7110
SIGN FACE MATERIALS		DMS-8300
USAGE	COLOR	SIGN FACE MATERIAL
BACKGROUND	ALL	TYPE D SHEETING
LEGEND & BORDERS	WHITE	TYPE D SHEETING
LEGEND & BORDERS	BLACK	ACRYLIC NON-REFLECTIVE FILM

GENERAL NOTES:

1. Signs to be furnished shall be as detailed elsewhere in the plans and/or as shown on sign tabulation sheet. Standard sign designs and arrow dimensions can be found in the "Standard Highway Sign Designs for Texas" (SHSD).
2. Route Marker legends (ie. IH, US, SH and FM shields) shall use the Federal Highway Administration (FHWA) Standard Highway Alphabets (B, C, D, E, Emod, or F).
3. Lateral spacing between letters and numerals shall conform with the SHSD, and any approved changes thereto. Lateral spacing of legend shall provide a balanced appearance when spacing is not shown.
4. Black legend and borders shall be applied by screening process or cut-out acrylic non-reflective black film to background sheeting, or combination thereof.
5. White legend and borders shall be applied by screening process with transparent colored ink, transparent colored overlay film to white background sheeting or cut-out white sheeting to colored background sheeting, or combination thereof.
6. Colored legend and borders shall be applied by screening process with transparent colored ink, transparent colored overlay film or colored sheeting to white background sheeting, or combination thereof.
7. Route markers and other attachments within the parent sign face shall be direct applied unless otherwise specified in the plans. Attachments not direct applied shall use 0.063 inch thick one piece sheet aluminum signs (Type A).
8. General Service Plaques shall be 0.080 inch thick and Routing Plaques shall be 0.100 inch thick.
9. The priority for Routing Plaques shall be (left to right) Hazardous Cargo, Airport then Hospital. See examples for mounting location.
10. Mounting details of attachments to parent signs face are shown on Standard Plan Sheet TSR(5). Mounting details of sign plaque attachments above and below parent sign are shown in the "SMD series" Standard Plan Sheets.
11. Plaques shall be horizontally centered at the top of the parent sign. If an exit number panel exists, the plaque shall be centered between the edge of the parent sign and the edge of the exit number panel. The plaque may be placed above the exit number panel when there is insufficient space.

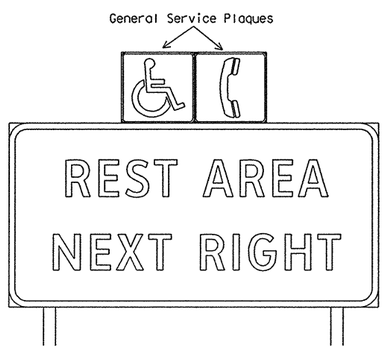

REQUIREMENTS FOR EXIT ONLY AND LEFT EXIT PANELS

TYPICAL EXAMPLES

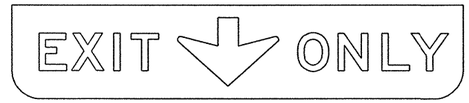

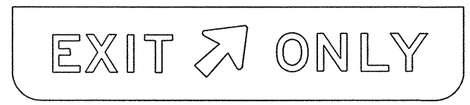

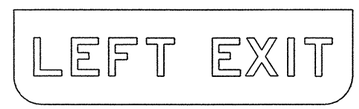

DEPARTMENTAL MATERIAL SPECIFICATIONS		
ALUMINUM SIGN BLANKS		DMS-7110
SIGN FACE MATERIALS		DMS-8300
OVERHEAD EXIT PANELS		
USAGE	COLOR	SIGN FACE MATERIAL
BACKGROUND	YELLOW	TYPE E SHEETING
LEGEND	BLACK	ACRYLIC NON-REFLECTIVE FILM

GENERAL NOTES:

1. Signs to be furnished shall be as detailed elsewhere in the plans and/or as shown on sign tabulation sheet. Standard sign designs and arrow dimensions can be found in the "Standard Highway Sign Designs for Texas" (SHSD). Individual panel sizes shown in the plans may be adjusted to fit actual parent sign sizes if necessary.
2. Exit Panel legend shall use the Federal Highway Administration (FHWA) Standard Highway Alphabets E Series.
3. Lateral spacing between letters and numerals shall conform with the SHSD, and any approved changes thereto. Lateral spacing of legend shall provide a balanced appearance when spacing is not shown.
4. Black legend shall be applied by screening process or cut-out acrylic non-reflective black film to yellow background sheeting, or combination thereof.
5. Exit Only and Left Exit panels within the parent sign face shall be direct applied unless otherwise specified in the plans. Panels not direct applied shall use 0.063 inch thick one piece sheet aluminum signs (Type A).
6. Mounting details of Exit Only and Left Exit panel attachments to parent signs face are shown on Standard Plan Sheet TSR(5).

The Standard Highway Sign Designs for Texas (SHSD) can be found at the following website.

http://www.txdot.gov/publications/traffic.htm

Texas Department of Transportation
Traffic Operations Division

TYPICAL SIGN REQUIREMENTS

TSR(2)-08

©TxDOT October 2003

REVISIONS	DN: TXDOT	CK: TXDOT	DW: TXDOT	CK: TXDOT
12-03	CONT	SECT	JOB	HIGHWAY
9-08	0683	06	027	LP 1/SH 45
	DIST		COUNTY	SHEET NO.
	AUS		WILLIAMSON	613

DATE:
FILE:

DISCLAIMER: The use of this standard is governed by the "Texas Engineering Practice Act". No warranty of any kind is made by TxDOT for any purpose whatsoever. TxDOT assumes no responsibility for the conversion of this standard to other formats or for incorrect results or damages resulting from its use.

REQUIREMENTS FOR E SERIES STANDARD GUIDE SIGNS

TYPICAL EXAMPLES

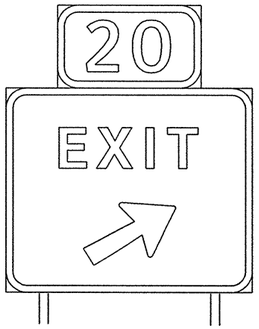

DEPARTMENTAL MATERIAL SPECIFICATIONS

ALUMINUM SIGN BLANKS	DMS-7110
SIGN FACE MATERIALS	DMS-8300
FIBERGLASS SIGN SUBSTRATE	DMS-8305

GROUND-MOUNTED SIGNS

USAGE	COLOR	SIGN FACE MATERIAL
BACKGROUND	ALL	TYPE C SHEETING
LEGEND & BORDERS	WHITE	TYPE D SHEETING

GENERAL NOTES:

1. Signs to be furnished shall be as detailed elsewhere in the plans and/or as shown on sign tabulation sheet. Standard sign designs and arrow dimensions can be found in the "Standard Highway Sign Designs for Texas" (SHSD). Individual panel sizes shown in the plans may be adjusted to fit actual parent sign sizes if necessary.
2. White legend shall use the Clearview Alphabet.
   The following Clearview fonts shall be used to replace the existing white Federal Highway Administration (FHWA) Standard Highway Alphabets, when not specified in the SHSD, or in the plans.
   - B CV-1W
   - C CV-2W
   - D CV-3W
   - E CV-4W
   - Emod CV-5WR
   - F CV-6W
3. Lateral spacing between letters and numerals shall conform with the SHSD, and any approved changes thereto. Lateral spacing of legend shall provide a balanced appearance when spacing is not shown.
4. White legend, symbols and borders shall be cut-out white sheeting applied to colored background sheeting.
5. Information regarding borders and radii for signs is found in the "Standard Highway Sign Designs for Texas". Dimensions shown and described for borders and corner radii on parent sign are nominal. Borders may vary in width as much as 1/2 inch. Corner radii above 3 inches may vary in width as much as 1 inch. Borders and corner radii within a parent sign must be of matching widths. The sign area outside the corner radius need not be trimmed or rounded if fabricated from an extruded material.
6. Sign substrate shall be any material that meets the Departmental Material Specification requirements of DMS-7110, or DMS-8305. Exit Number Panels attached above the parent sign shall be made with the same substrate and sheeting as the parent sign.
7. Mounting details of attachments above and below parent sign are shown in the "SMD series" Standard Plan Sheets. Mounting details of roadside signs are shown in the "SMD series" Standard Plan Sheets.
8. Cut all legend, symbols, and borders at panel joints.

REQUIREMENTS FOR BLUE, BROWN & GREEN D AND I SERIES GUIDE SIGNS

TYPICAL EXAMPLES

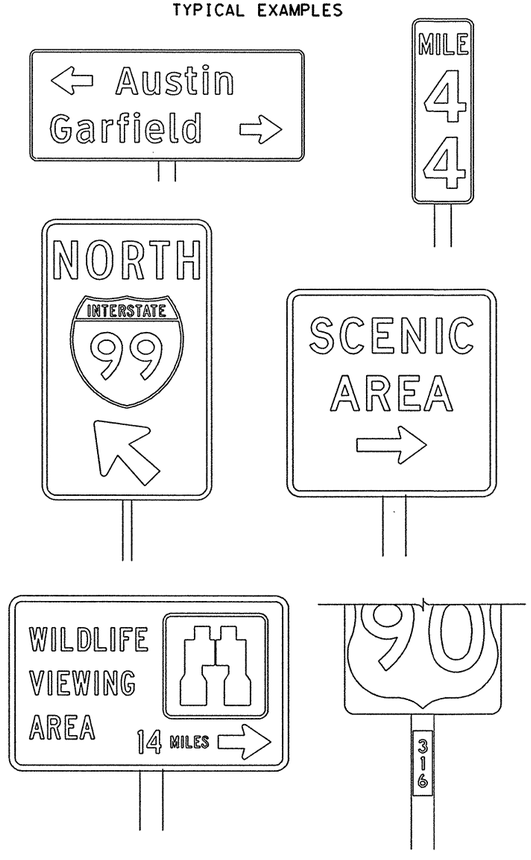

DEPARTMENTAL MATERIAL SPECIFICATIONS

ALUMINUM SIGN BLANKS	DMS-7110
SIGN FACE MATERIALS	DMS-8300
FIBERGLASS SIGN SUBSTRATE	DMS-8305

Square Ft.	Min. Thickness
Less than 7.5	0.080
7.5 to 15	0.100
Greater than 15	0.125

GROUND-MOUNTED SIGNS

USAGE	COLOR	SIGN FACE MATERIAL
BACKGROUND	ALL	TYPE C SHEETING
LEGEND & BORDERS	WHITE	TYPE D SHEETING

GENERAL NOTES:

1. Signs to be furnished shall be as detailed elsewhere in the plans and/or as shown on sign tabulation sheet. Standard sign designs and arrow dimensions can be found in the "Standard Highway Sign Designs for Texas" (SHSD).
2. White legend shall use the Clearview Alphabet.
   The following Clearview fonts shall be used to replace the existing white Federal Highway Administration (FHWA) Standard Highway Alphabets, when not specified in the SHSD, or in the plans.
   - B CV-1W
   - C CV-2W
   - D CV-3W
   - E CV-4W
   - Emod CV-5WR
   - F CV-6W
3. Lateral spacing between letters and numerals shall conform with the SHSD, and any approved changes thereto. Lateral spacing of legend shall provide a balanced appearance when spacing is not shown.
4. White legend, symbols and borders shall be cut-out white sheeting applied to colored background sheeting.
5. Information regarding borders and radii for signs is found in the "Standard Highway Sign Designs for Texas". Dimensions shown and described for borders and corner radii on parent sign are nominal. Borders may vary in width as much as 1/2 inch. Corner radii above 3 inches may vary in width as much as 1 inch. Borders and corner radii within a parent sign must be of matching widths. The sign area outside the corner radius should be trimmed or rounded.
6. Sign substrate shall be any material that meets the Departmental Material Specification requirements of DMS-7110 or DMS 8305.
7. Mounting details of roadside signs are shown in the "SMD series" Standard Plan Sheets.

REQUIREMENTS FOR INDEPENDENT MOUNTED ROUTE MARKERS

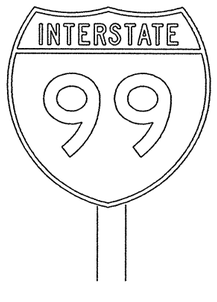

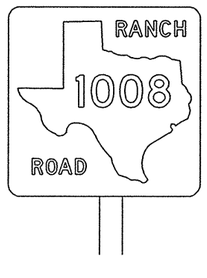

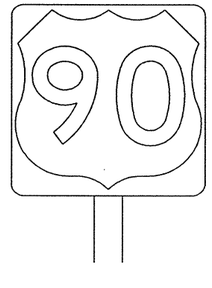

DEPARTMENTAL MATERIAL SPECIFICATIONS

ALUMINUM SIGN BLANKS	DMS-7110
SIGN FACE MATERIALS	DMS-8300

USAGE	COLOR	SIGN FACE MATERIAL
BACKGROUND	ALL	TYPE C SHEETING
LEGEND & BORDERS	WHITE	TYPE C SHEETING
LEGEND & BORDERS	BLACK	ACRYLIC NON-REFLECTIVE FILM

GENERAL NOTES:

1. Signs to be furnished shall be as detailed elsewhere in the plans and/or as shown on sign tabulation sheet. Standard sign designs and arrow dimensions can be found in the "Standard Highway Sign Designs for Texas" (SHSD).
2. Route Marker legend (ie. IH, US, SH and FM shields) shall use the Federal Highway Administration (FHWA) Standard Highway Alphabets (B, C, D, E, Emod or F).
3. Lateral spacing between letters and numerals shall conform with the SHSD, and any approved changes thereto. Lateral spacing of legend shall provide a balanced appearance when spacing is not shown.
4. Black legend and borders shall be applied by screening process or cut-out acrylic non-reflective black film to white background sheeting, or combination thereof.
5. White legend and borders shall be applied by screening process with transparent colored ink, transparent colored overlay film to white background sheeting or cut-out white sheeting to colored background sheeting, or combination thereof.
6. Independent mounted Route Marker sign blanks, for 24 inch markers shall be 0.080 inch thick, and for 36 inch markers shall be 0.100 inch thick one piece sheet aluminum signs(Type A).
7. Mounting details for roadside mounted signs are shown in the "SMD series" Standard Plan Sheets.

The Standard Highway Sign Designs for Texas (SHSD) can be found at the following website.

http://www.txdot.gov/publications/traffic.htm

Texas Department of Transportation
Traffic Operations Division

TYPICAL SIGN REQUIREMENTS

TSR(3)-08

© TxDOT October 2003

REVISIONS
12-03
9-08

DN: TXDOT	CK: TXDOT	DW: TXDOT	CK: TXDOT
CONT	SECT	JOB	HIGHWAY
0683	06	027	LP 1/SH 45
DIST		COUNTY	SHEET NO.
AUS		WILLIAMSON	614

DATE:
FILE:

DISCLAIMER: The use of this standard is governed by the "Texas Engineering Practice Act". No warranty of any kind is made by TxDOT for any purpose whatsoever. TxDOT assumes no responsibility for the conversion of this standard to other formats or for incorrect results or damages resulting from its use.

REQUIREMENTS FOR REGULATORY SIGNS

TYPICAL EXAMPLES

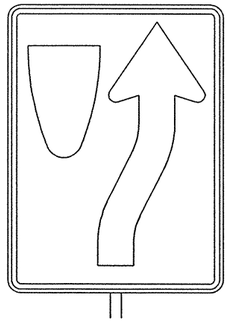

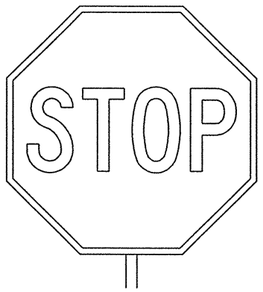

DEPARTMENTAL MATERIAL SPECIFICATIONS

ALUMINUM SIGN BLANKS DMS-7110

Square Ft.	Min. Thickness
Less than 7.5	0.080
7.5 to 15	0.100
Greater than 15	0.125

SIGN FACE MATERIALS DMS-8300

USAGE	COLOR	SIGN FACE MATERIAL
BACKGROUND	ALL	TYPE C SHEETING
LEGEND & BORDERS	WHITE	TYPE C SHEETING
LEGEND & BORDERS	BLACK	ACRYLIC NON-REFLECTIVE FILM

GENERAL NOTES:

1. Signs to be furnished shall be as detailed elsewhere in the plans and/or as shown on sign tabulation sheet. Standard sign designs and arrow dimensions can be found in the "Standard Highway Sign Designs for Texas" (SHSD).
2. Regulatory sign legend shall use the Federal Highway Administration (FHWA) Standard Highway Alphabets (B, C, D, E, Emod or F).
3. Lateral spacing between letters and numerals shall conform with the SHSD, and any approved changes thereto. Lateral spacing of legend shall provide a balanced appearance when spacing is not shown.
4. Black legend and borders shall be applied by screening process or cut-out acrylic non-reflective black film to white background sheeting, or combination thereof.
5. White legend and borders shall be applied by screening process with transparent colored ink, transparent colored overlay film to white background sheeting or cut-out white sheeting to colored background sheeting, or combination thereof.
6. Colored legend shall be applied by screening process with transparent colored ink, transparent colored overlay film or colored sheeting to background sheeting, or combination thereof.
7. Sign substrate shall be any material that meets the Departmental Material Specification requirements of DMS-7110.
8. Mounting details for roadside mounted signs are shown in the "SMD series" Standard Plan Sheets.

REQUIREMENTS FOR SCHOOL SIGNS

TYPICAL EXAMPLES

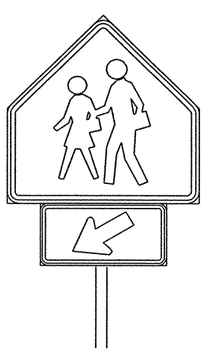

DEPARTMENTAL MATERIAL SPECIFICATIONS

ALUMINUM SIGN BLANKS DMS-7110

Square Ft.	Min. Thickness
Less than 7.5	0.080
7.5 to 15	0.100
Greater than 15	0.125

SIGN FACE MATERIALS DMS-8300

USAGE	COLOR	SIGN FACE MATERIAL
BACKGROUND	WHITE	TYPE C SHEETING
BACKGROUND	FLOR.YEL.GRN.	TYPE E SHEETING
LEGEND & BORDERS	BLACK	ACRYLIC NON-REFLECTIVE FILM

GENERAL NOTES:

1. Signs to be furnished shall be as detailed elsewhere in the plans and/or as shown on sign tabulation sheet. Standard sign designs and arrow dimensions can be found in the "Standard Highway Sign Designs for Texas" (SHSD).
2. School sign legend shall use the Federal Highway Administration (FHWA) Standard Highway Alphabets (B, C, D, E, Emod or F).
3. Lateral spacing between letters and numerals shall conform with the SHSD, and any approved changes thereto. Lateral spacing of legend shall provide a balanced appearance when spacing is not shown.
4. Black legend and borders shall be applied by screening process or cut-out acrylic non-reflective black film to background sheeting, or combination thereof.
5. Sign substrate shall be any material that meets the Departmental Material Specification requirements of DMS-7110.
6. Mounting details for roadside mounted signs are shown in the "SMD series" Standard Plan Sheets.

REQUIREMENTS FOR WARNING SIGNS

TYPICAL EXAMPLES

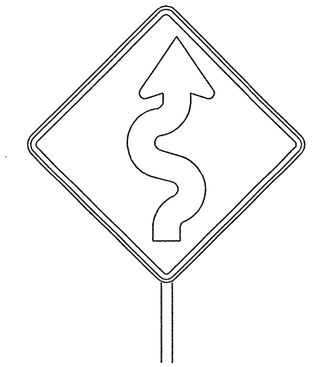

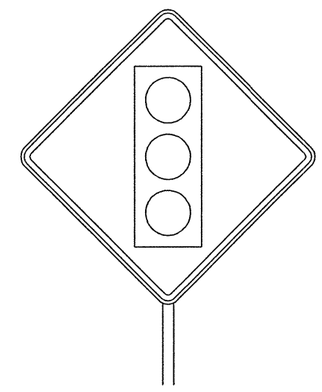

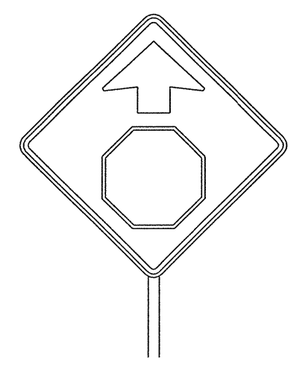

DEPARTMENTAL MATERIAL SPECIFICATIONS

ALUMINUM SIGN BLANKS DMS-7110

Square Ft.	Min. Thickness
Less than 7.5	0.080
7.5 to 15	0.100
Greater than 15	0.125

SIGN FACE MATERIALS DMS-8300

USAGE	COLOR	SIGN FACE MATERIAL
BACKGROUND	YELLOW	TYPE E SHEETING
LEGEND & BORDERS	BLACK	ACRYLIC NON-REFLECTIVE FILM
LEGEND & SYMBOLS	ALL OTHER	TYPE D SHEETING

GENERAL NOTES:

1. Signs to be furnished shall be as detailed elsewhere in the plans and/or as shown on sign tabulation sheet. Standard sign designs and arrow dimensions can be found in the "Standard Highway Sign Designs for Texas" (SHSD).
2. Warning sign legend shall use the Federal Highway Administration (FHWA) Standard Highway Alphabets (B, C, D, E, Emod, or F).
3. Lateral spacing between letters and numerals shall conform with the SHSD, and any approved changes thereto. Lateral spacing of legend shall provide a balanced appearance when spacing is not shown.
4. Black legend and borders shall be applied by screening process or cut-out acrylic non-reflective black film to yellow background sheeting, or combination thereof.
5. Colored legend and symbols shall be applied by screening process with transparent colored ink, transparent colored overlay film, or colored sheeting to white sheeting, or combination thereof. The colored legend or symbol is then applied to the yellow background sheeting.
6. Sign substrate shall be any material that meets the Departmental Material Specification requirements of DMS-7110.
7. Mounting details for roadside mounted signs are shown in the "SMD series" Standard Plan Sheets.

The Standard Highway Sign Designs for Texas (SHSD) can be found at the following website.

http://www.txdot.gov/publications/traffic.htm

Texas Department of Transportation
Traffic Operations Division

TYPICAL SIGN REQUIREMENTS

TSR(4)-08

© TxDOT October 2003

REVISIONS	DN: TXDOT	CK: TXDOT	DW: TXDOT	CK: TXDOT
12-03	CONT	SECT	JOB	HIGHWAY
9-08	0683	06	027	LP 1/SH 45
	DIST		COUNTY	SHEET NO.
	AUS		WILLIAMSON	615

DATE:
FILE:

DISCLAIMER: The use of this standard is governed by the "Texas Engineering Practice Act". No warranty of any kind is made by TxDOT for any purpose whatsoever. TxDOT assumes no responsibility for the conversion of this standard to other formats or for incorrect results or damages resulting from its use.

MOUNTING DETAILS OF ATTACHMENTS TO GUIDE SIGN FACE ("EXIT ONLY" AND "LEFT EXIT" PANELS, ROUTE MARKERS AND OTHER ATTACHMENTS)

DIRECT APPLIED ATTACHMENT

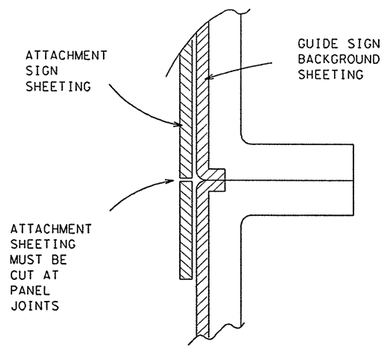

Sheeting for legend, symbols, and borders must be cut at panel joints.

Direct applied attachment signs will be subsidiary to "Aluminum Signs" or "Fiberglass Signs".

SCREW ATTACHMENT

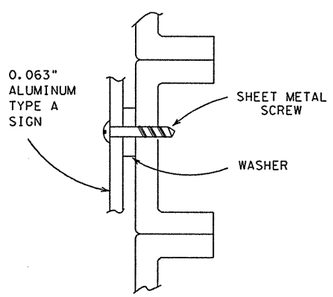

NUT/BOLT ATTACHMENT

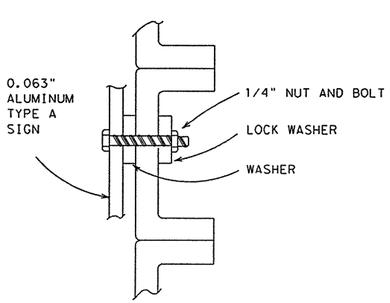

Furnish Type A aluminum sign attachments only when specified in the plans. These signs will be paid for under "Aluminum Signs".

SIGN BLANK PUNCHING DETAILS FOR ATTACHMENTS WHEN SPECIFIED TO BE TYPE A ALUMINUM SIGNS (FOR MOUNTING TO GUIDE SIGN FACE)

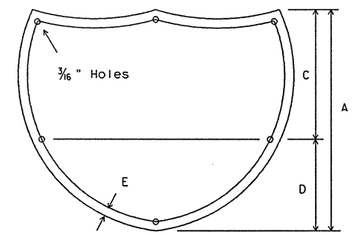

INTERSTATE ROUTE MARKERS

A	C	D	E
36	21	15	1*
48	28	20	1*

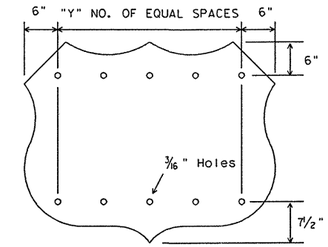

U.S. ROUTE MARKERS

Sign Size	"Y"
24x24	2
30x24	3
36x36	3
45x36	4
48x48	4
60x48	5

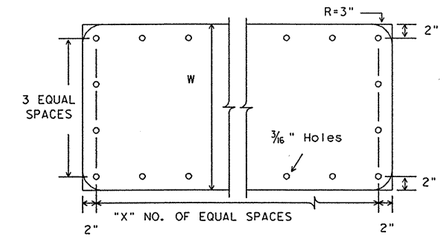

STATE ROUTE MARKERS

No. of Digits	W	X
4	24	4
4	36	5
4	48	6
3	24	3
3	36	4
3	48	5

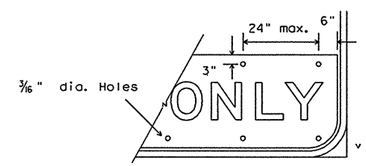

EXIT ONLY PANEL

ARROW DETAILS

for Large Ground-Mounted and Overhead Guide Signs

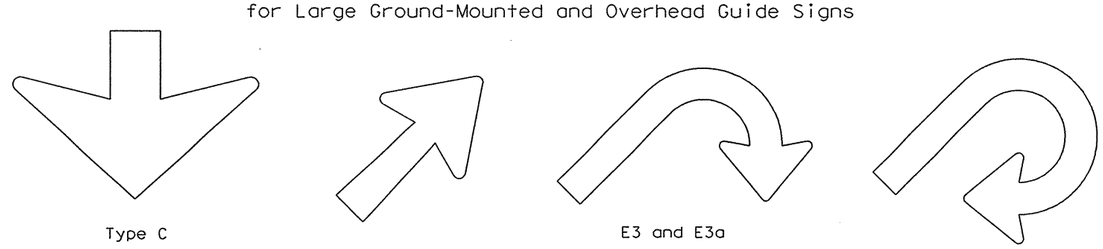

Type C "Down" arrow

E3 and E3a

E4 and E4a

TYPE	LETTER SIZE
A-1	10.67" UL and 10" Caps
A-2	13.33" UL and 12" Caps
A-3	16" UL
B-1	10.67" UL and 10" Caps
B-2	13.33" UL and 12" Caps
B-3	16" UL

CODE	USED ON SIGN NO.
E-3 & E-4	E5-3 and E5-4
E-3a & E-4a	E5-3a and E5-4a

Arrow dimensions are shown in the "Standard Highway Sign Designs for Texas" manual.

The Standard Highway Sign Designs for Texas (SHSD) can be found at the following website.

http://www.txdot.gov/publications/traffic.htm

ARROW DETAILS

for Destination Signs

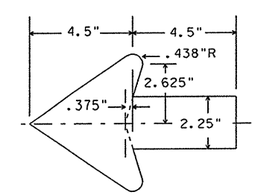

Standard arrow to be used with 6 inch letters.

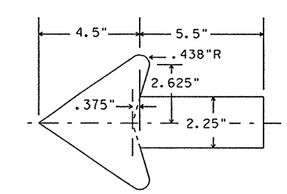

Standard arrow to be used with 8 inch letters.

Texas Department of Transportation
Traffic Operations Division

TYPICAL SIGN REQUIREMENTS

TSR(5)-08

© TxDOT October 2003

REVISIONS
12-03
9-08

DN: TXDOT	CK: TXDOT	DW: TXDOT	CK: TXDOT
CONT	SECT	JOB	HIGHWAY
0683	06	027	LP 1/SH 45
DIST		COUNTY	SHEET NO.
AUS		WILLIAMSON	616

DATE:
FILE:

DISCLAIMER
The use of this standard is governed by the "Texas Engineering Practice Act". No warranty of any kind is made by TxDOT for any purpose whatsoever. TxDOT assumes no responsibility for the conversion of this standard to other formats or for incorrect results or damages resulting from its use.

SIGN SUPPORT DESCRIPTIVE CODES

(Descriptive Codes correspond to project estimate and quantities sheets)

SM RD SGN ASSM TY XXXXX(X)XX(X-XXXX)

Post Type

FRP = Fiberglass Reinforced Plastic Pipe (see SMD(FRP))
TWT = Thin-Walled Tubing (see SMD(TWT))
10BWG = 10 BWG Tubing (see SMD(SLIP-1) to (SLIP-3))
S80 = Schedule 80 Pipe (see SMD(SLIP-1) to (SLIP-3))

Number of Posts (1 or 2)

Anchor Type

UA = Universal Anchor - Concreted (see SMD(FRP) and (TWT))
UB = Universal Anchor - Bolted down (see SMD(FRP) and (TWT))
WS = Wedge Anchor Steel - (see SMD(TWT))
WP = Wedge Anchor Plastic (see SMD(TWT))
SA = Slipbase - Concreted (see SMD(SLIP-1) to (SLIP-3))
SB = Slipbase - Bolted Down (see SMD(SLIP-1) to (SLIP-3))

Sign Mounting Designation

P = Prefab. "Plain" (see SMD(SLIP-1) to (SLIP-3), (TWT), (FRP))
T = Prefab. "T" (see SMD(SLIP-1) to (SLIP-3), (TWT))
U = Prefab. "U" (see SMD(SLIP-1) to (SLIP-3))
IF REQUIRED
1EXT or 2EXT = Number of Extensions (see SMD(SLIP-1) to (SLIP-3), (TWT))
BM = Extruded Wind Beam (see SMD(SLIP-1) to (SLIP-3))
WC = 1.12 #/ft Wing Channel (see SMD(SLIP-1) to (SLIP-3))
EXAL = Extruded Aluminum Sign Panels (see SMD(SLIP-3))

REQUIRED CLEARANCE FOR BREAKAWAY SUPPORT

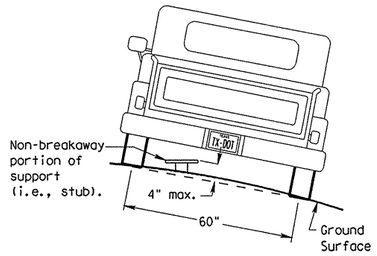

To avoid vehicle undercarriage snagging, any substantial remains of a breakaway support, when it is broken away, should not project more than 4 inches above a 60-inch chord (i.e., typical space between wheel paths).

SIGN LOCATION

PAVED SHOULDERS

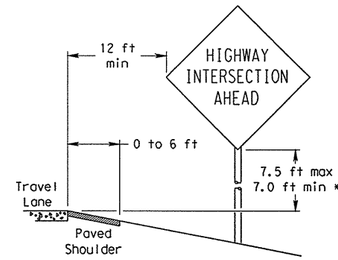

LESS THAN 6 FT. WIDE

When the shoulder is 6 ft. or less in width, the sign must be placed at least 12 ft. from the edge of the travel lane.

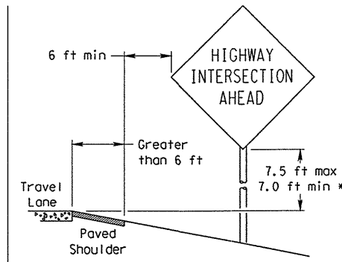

GREATER THAN 6 FT. WIDE

When the shoulder is greater than 6 ft in width, the sign must be placed at least 6 ft. from the edge of the shoulder.

T-INTERSECTION

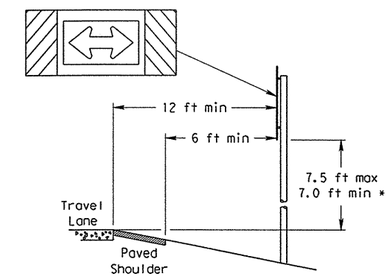

When this sign is needed at the end of a two-lane, two way roadway, the right edge of the sign should be in line with the centerline of the roadway. Place as close to ROW as practical.

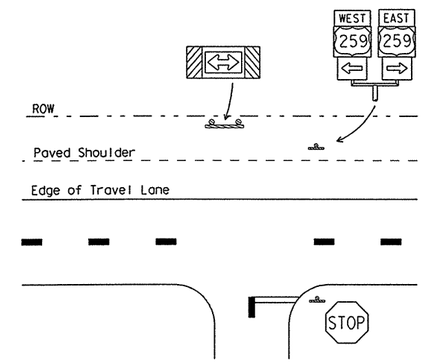

BEHIND BARRIER

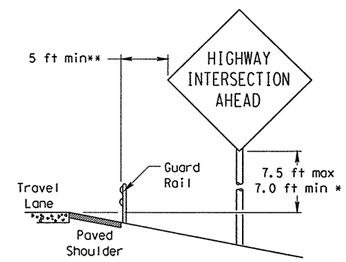

BEHIND GUARDRAIL

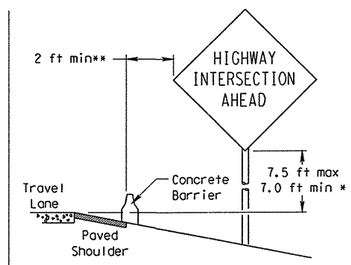

BEHIND CONCRETE BARRIER

**Sign clearance based on distance required for proper guard rail or concrete barrier performance.

* Signs shall be mounted using the following condition that results in the greatest sign elevation:

(1) a minimum of 7 to a maximum of 7.5 feet above the edge of the travel lane or

(2) a minimum of 7 to a maximum of 7.5 feet above the grade at the base of the support when sign is installed on the backslope.

The maximum values may be increased when directed by the Engineer.

See the Traffic Operations Division website for detailed drawings of sign clamps, Triangular Slipbase System components and Wedge Anchor System components.

The website address is:
http://www.txdot.gov/publications/traffic.htm

No more than 2 sign posts should be located within a 7 ft. circle.

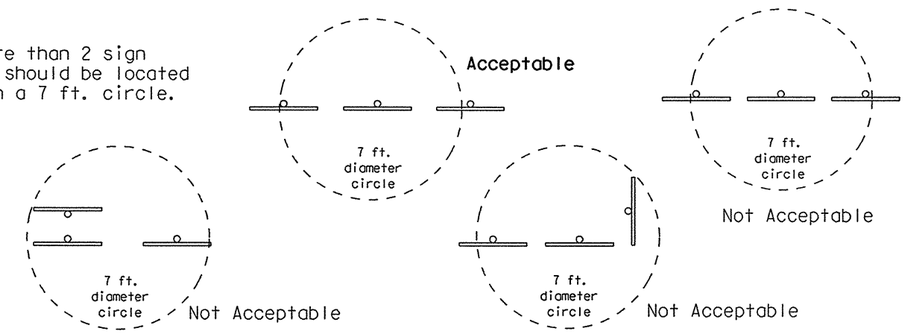

TYPICAL SIGN ATTACHMENT DETAIL

Single Signs

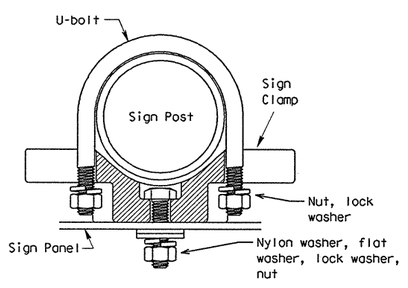

Bolts used to mount sign panels to the clamp are 5/16-18 UNC galvanized square head with nut, nylon washer, flat washer and lock washer. The bolt length is 1 inch for aluminum.

When two sign clamps are used to mount signs back-to-back, use a 5/16-18 UNC galvanized hex head per ASTM A307 with nut and helical-spring lock washer. The approximate bolt lengths for various post sizes and sign clamp types are given in the table at right. The bolt length may need to be adjusted depending upon field conditions.

Sign clamps may be either the specific size clamp or the universal clamp.

Back-to-Back Signs

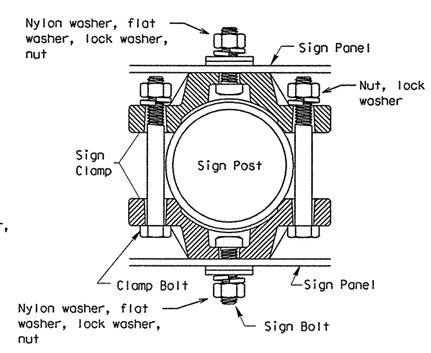

Pipe Diameter	Approximate Bolt Length	
	Specific Clamp	Universal Clamp
2" nominal	3"	3 or 3 1/2"
2 1/2" nominal	3 or 3 1/2"	3 1/2 or 4"
3" nominal	3 1/2 or 4"	4 1/2"

SIGNS WITH PLAQUES

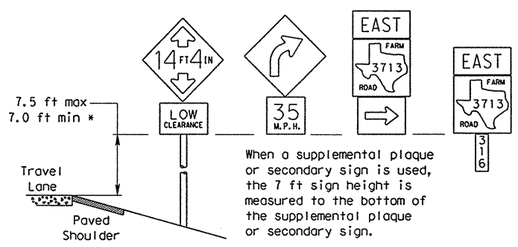

When a supplemental plaque or secondary sign is used, the 7 ft sign height is measured to the bottom of the supplemental plaque or secondary sign.

CURB & GUTTER OR RAISED ISLAND

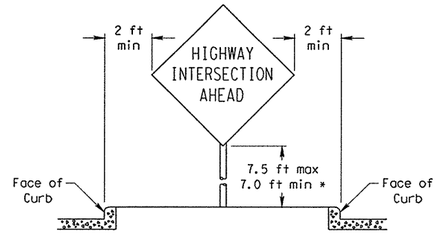

RESTRICTED RIGHT-OF-WAY

(When 6 ft min. is not possible.)

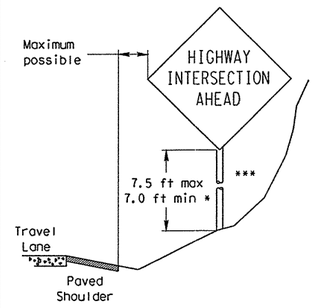

Right-of-way restrictions may be created by rocks, water, vegetation, forest, buildings, a narrow island, or other factors.

In situations where a lateral restriction prevents the minimum horizontal clearance from the edge of the travel lane, signs should be placed as far from the travel lane as practical.

*** Post may be shorter if protected by guardrail or if Engineer determines the post could not be hit due to extreme slope.

STANDARD PLANS
TEXAS DEPARTMENT OF TRANSPORTATION
Traffic Operations Division

SIGN MOUNTING DETAILS SMALL ROADSIDE SIGNS GENERAL NOTES & DETAILS

SMD(GEN)-08

©TxDOT July 2002

REVISIONS	STATE DISTRICT	FEDERAL REGION	FEDERAL AID PROJECT	SHEET
9-08	AUSTIN	6		617
	COUNTY		CONTROL-SECT-JOB	HIGHWAY
	WILLIAMSON		0683-06-027	SH 45 LOOP 1

TRIANGULAR SLIPBASE INSTALLATION GENERAL REQUIREMENTS

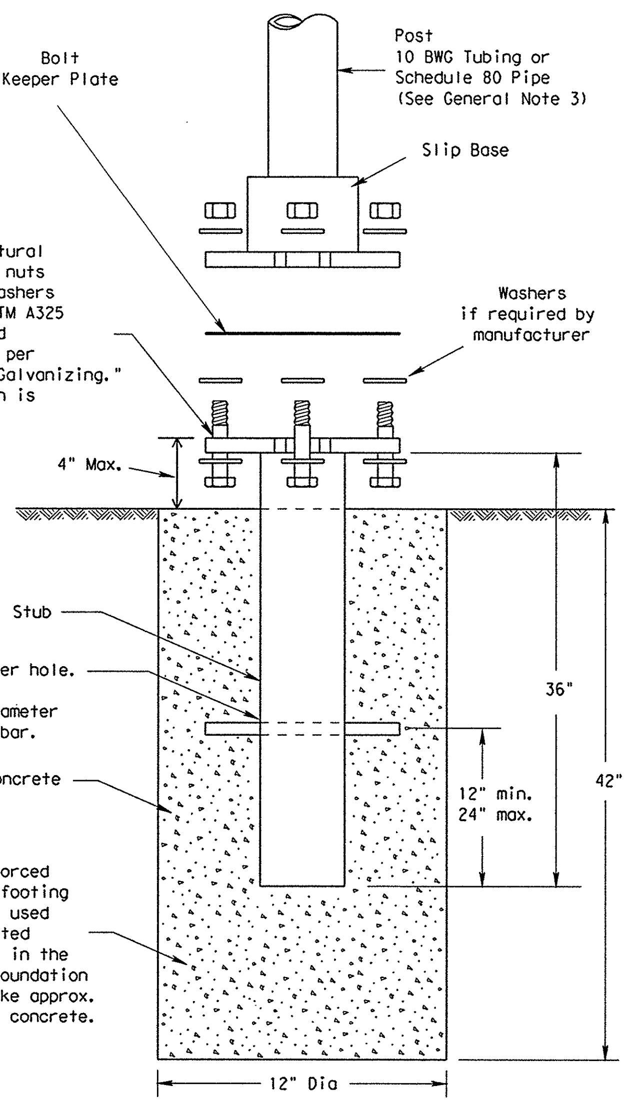

SM RD SGN ASSM TY XXXXX(X)SA(X-XXXX)

NOTE

There are various devices approved for the Triangular Slipbase System. Please reference the Material Producer List for approved slip base systems. http://www.txdot.gov/business/producer_list.htm The devices shall be installed per manufacturers' recommendations. Installation procedures shall be provided to the Engineer by Contractor.

GENERAL NOTES:

1. Slip base shall be permanently marked to indicate manufacturer. Method, design, and location of marking are subject to approval of the TxDOT Traffic Standards Engineer.
2. Material used as post with this system shall conform to the following specifications:
   10 BWG Tubing (2.875" outside diameter)
     0.134" nominal wall thickness
     Seamless or electric-resistance welded steel tubing or pipe
     Steel shall be HSLAS Gr 55 per ASTM A1011 or ASTM A1008
     Other steels may be used if they meet the following:
       55,000 PSI minimum yield strength
       70,000 PSI minimum tensile strength
       20% minimum elongation in 2"
     Wall thickness (uncoated) shall be within the range of 0.122" to 0.138"
     Outside diameter (uncoated) shall be within the range of 2.867" to 2.883"
     Galvanization per ASTM A123 or ASTM A653 G210. For precoated steel tubing (ASTM A653), recoat tube outside diameter weld seam by metallizing with zinc wire per ASTM B833.
   Schedule 80 Pipe (2.875" outside diameter)
     0.276" nominal wall thickness
     Steel tubing per ASTM A500 Gr C
     Other seamless or electric-resistance welded steel tubing or pipe with equivalent outside diameter and wall thickness may be used if they meet the following:
       46,000 PSI minimum yield strength
       62,000 PSI minimum tensile strength
       21% minimum elongation in 2"
     Wall thickness (uncoated) shall be within the range of 0.248" to 0.304"
     Outside diameter (uncoated) shall be within the range of 2.855" to 2.895"
     Galvanization per ASTM A123
3. See the Traffic Operations Division website for detailed drawings of sign clamps and Texas Universal Triangular Slipbase System components. The website address is:
   http://www.txdot.gov/publications/traffic.htm
4. Sign supports shall not be spliced except where shown. Sign support posts shall not be spliced.

ASSEMBLY PROCEDURE

Foundation

1. Prepare 12-inch diameter by 42-inch deep hole. If solid rock is encountered, the depth of the foundation may be reduced such that it is embedded a minimum of 18 inches into the solid rock.
2. The Engineer may permit batches of concrete less than 2 cubic yards to be mixed with a portable, motor-driven concrete mixer. For small placements less than 0.5 cubic yards, hand mixing in a suitable container may be allowed by Engineer. Concrete shall be Class A.
3. Push the pipe end of the slip base stub into the center of the concrete. Rotate the stub back and forth while pushing it down into the concrete to assure good contact between the concrete and stub. Continue to work the stub into the concrete until it is between 2 to 4 inches above the ground.
4. Plumb the stub. Allow a minimum of 4 days to set, unless otherwise directed by the Engineer.
5. The triangular slipbase system is multidirectional and is designed to release when struck from any direction.

Support

1. Cut support so that the bottom of the sign will be 7 to 7.5 feet above the edge of the travelway (i.e., edge of the closest lane) when slip plate is below the edge of pavement or 7 to 7.5 feet above slip plate when the slip plate is above the edge of the travelway. The cut shall be plumb and straight.
2. Attach sign to support using connections shown. When multiple signs are installed on the same support, ensure the minimum clearance between each sign is maintained. See SMD(SLIP-2) for clearances based on sign types.

CONCRETE ANCHOR

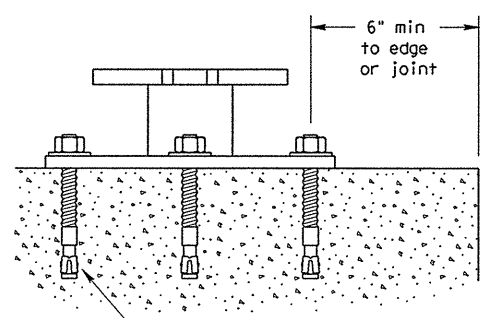

5/8" diameter Concrete Anchor - 8 places (embed a minimum of 5 1/2" and torque to min. of 50 ft-lbs). Anchor may be expansion or adhesive type.

SM RD SGN ASSM TY XXXXX(X)SB(X-XXXX)

Concrete anchor consists of 5/8" diameter stud bolt with UNC series bolt threads on the upper end. Heavy hex nut per ASTM A563, and hardened washer per ASTM F436. The stud bolt shall have a minimum yield and ultimate tensile strength of 50 and 75 KSI, respectively. Nuts, bolts and washers shall be galvanized per Item 445, "Galvanizing." Adhesive type anchors shall have stud bolts installed with Type III epoxy per DMS-6100, "Epoxies and Adhesives." Adhesive anchors may be loaded after adequate epoxy cure time per the manufacturer's recommendations. Top of bolt shall extend at least flush with top of the nut when installed. The anchor, when installed in 4000 psi normal-weight concrete with a 5 1/2" minimum embedment, shall have a minimum allowable tension and shear of 3900 and 3100 psi, respectively.

DISCLAIMER
The use of this standard is governed by the "Texas Engineering Practice Act". No warranty of any kind is made by TxDOT for any purpose whatsoever. TxDOT assumes no responsibility for the conversion of this standard to other formats or for incorrect results or damages resulting from its use.

DISPLAYED ACC:

STANDARD PLANS
Texas Department of Transportation
Traffic Operations Division

SIGN MOUNTING DETAILS
SMALL ROADSIDE SIGNS
TRIANGULAR SLIPBASE SYSTEM

SMD(SLIP-1)-08

©TxDOT July 2002	DN: TxDOT	CK: TxDOT	DW: TxDOT	CK: TxDOT
REVISIONS 9-08	STATE DISTRICT: AUSTIN	FEDERAL REGION: 6	FEDERAL AID PROJECT	SHEET 618
	COUNTY: WILLIAMSON		CONTROL-SECT-JOB: 0683-06-027	HIGHWAY: SH 45 LOOP 1

DISCLAIMER
The use of this standard is governed by the "Texas Engineering Practice Act". No warranty of any kind is made by TxDOT for any purpose whatsoever. TxDOT assumes no responsibility for the conversion of this standard to other formats or for incorrect results or damages resulting from its use.

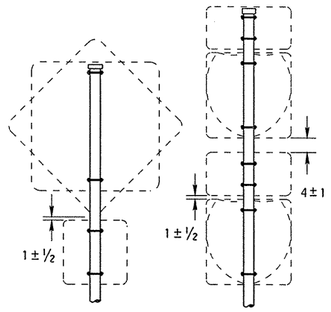

SM RD SGN ASSM TY XXXXX(1)XX(P)

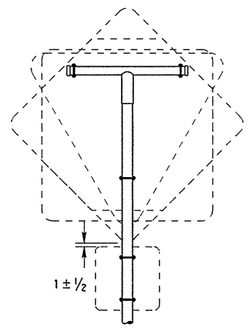

SM RD SGN ASSM TY XXXXX(1)XX(T)

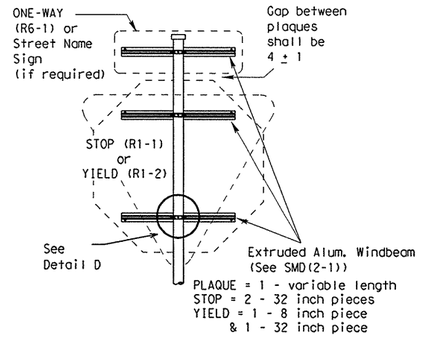

SM RD SGN ASSM TY XXXXX(1)XX(P-BM)

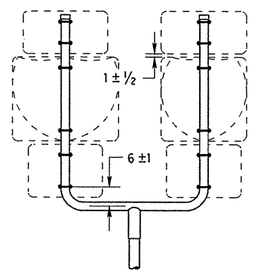

SM RD SGN ASSM TY XXXXX(1)XX(U)

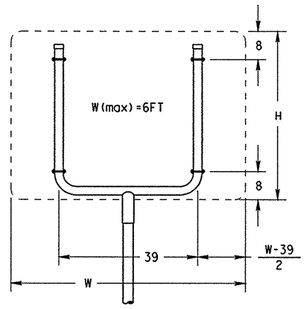

SM RD SGN ASSM TY XXXXX(1)XX(U)

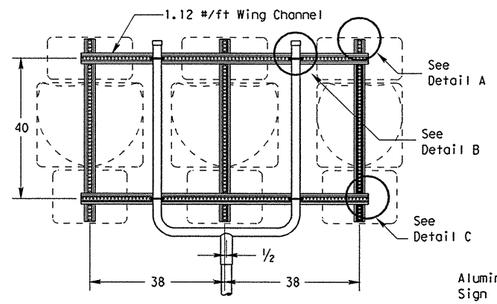

SM RD SGN ASSM TY XXXXX(1)XX(U-WC)
(See Note 11)

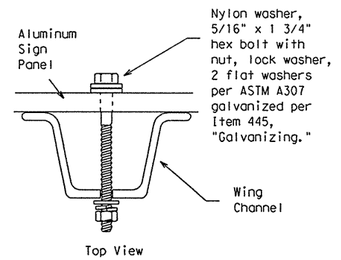

Detail A

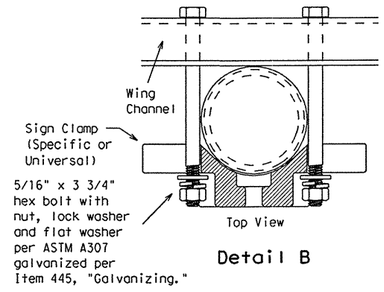

Detail B

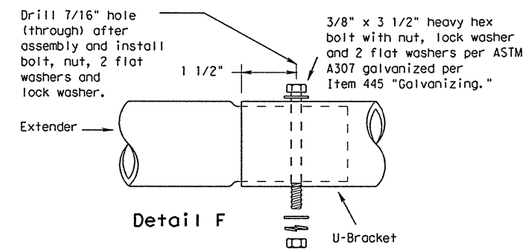

Detail F

Splices shall only be allowed behind the sign substrate.

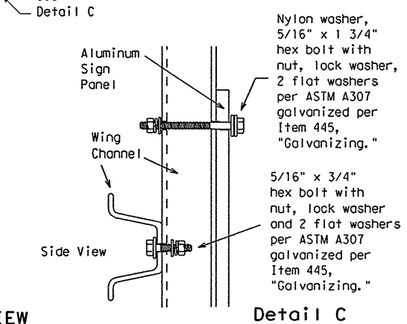

SIDE VIEW

Detail C

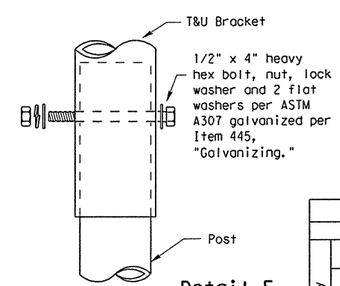

Detail E

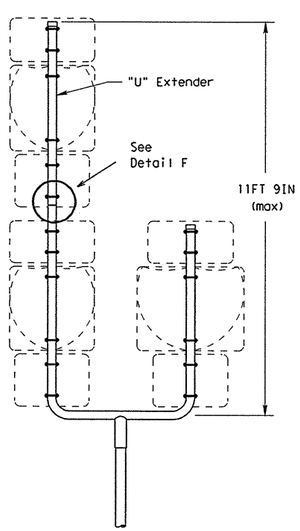

SM RD SGN ASSM TY S80(1)XX(U-1EXT)

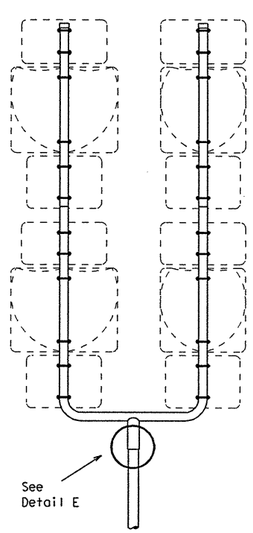

SM RD SGN ASSM TY S80(1)XX(U-2EXT)

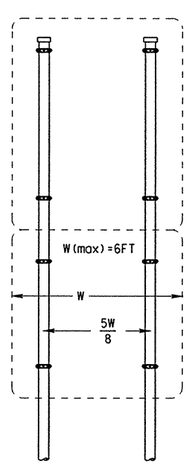

SM RD SGN ASSYM TY XXXXX(2)XX(P)

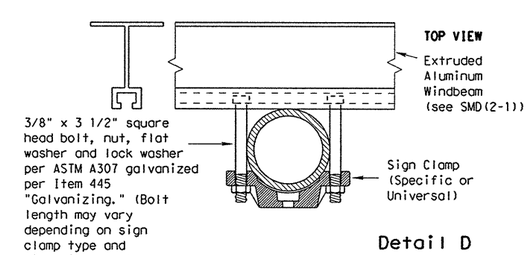

Detail D

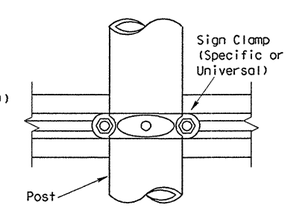

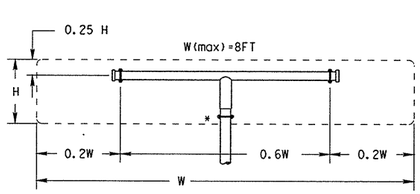

All dimensions are in english unless detailed otherwise.

SM RD SGN ASSM TY XXXXX(1)XX(T)
(* - See Note 12)

FRICTION CAP DETAIL

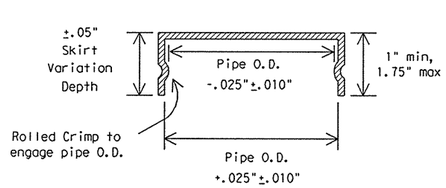

Friction caps may be manufactured from hot rolled or cold rolled steel sheets. The minimum sheet metal thickness shall be 24 gauge for all cap sizes.

The rim edges shall be reasonably straight and smooth. Caps shall be sized and formed in such a manner as to produce a drive-on friction fit and have no tendency to rock when seated on the pipe. The depth shall be sufficient to give positive protection against entrance of rainwater. They shall be free of sharp creases or indentations and show no evidence of metal fracture.

Caps shall have an electrodeposited coating of zinc in accordance with the requirements of ASTM B633 Class FE/ZN 8.

GENERAL NOTES:

1.

SIGN SUPPORT	# OF POSTS	MAX. SIGN AREA
10 BWG	1	16 SF
10 BWG	2	32 SF
Sch 80	1	32 SF
Sch 80	2	64 SF

2. The Engineer may require that a Schedule 80 post be used in place of a 10 BWG where a sign height is abnormally high due to a fill slope.
3. Sign supports shall not be spliced except where shown. Sign support posts shall not be spliced.
4. Aluminum sign blanks shall conform to Departmental Material Specifications DMS-7110 and shall have the following minimum thicknesses: 0.080 for signs less than 7.5 sq. ft., 0.100 for signs 7.5 to 15 sq. ft., and 0.125 for signs greater than 15 sq. ft.
5. Signs that require specific supports due to reasons in addition to windloading are indicated on the "REQUIRED SUPPORT" table on this sheet.
6. For horizontal rectangular signs fabricated from flat aluminum, T-brackets are used for signs 24 inches or less in height. U-brackets are used for signs of greater height.
7. When two triangular slipbase supports are used to support a single sign, they shall not be "rigidly" connected to each other except through the sign panel. This will allow each support to act independently when impacted by an errant vehicle.
8. Wing channel shall meet ASTM A 1011 SS Gr 50 and be galvanized per ASTM A 123.
9. Excess pipe, wing channel, or windbeam shall be cut off so that it does not extend beyond the sign panel (i.e., excess support shall not be visible when the sign is viewed from the front.) Repair galvanized coating at cut support ends per Item 445, "Galvanizing."
10. Additional route markers may be added vertically, provided the total sign area does not exceed the maximum allowable amount per Note 1.
11. Additional sign clamp required on the "T-bracket" post for 24 inch height signs. Place the clamp 3 inches above bottom of sign when possible.
12. Post open ends shall be fitted with Friction Caps.
13. Sign blanks shall be the sizes and shapes shown on the plans.

REQUIRED SUPPORT

	SIGN DESCRIPTION	SUPPORT
Regulatory	48-inch STOP sign (R1-1)	TY 10BWG(1)XX(T) TY 10BWG(1)XX(P-BM)
	60-inch YIELD sign (R1-2)	TY 10BWG(1)XX(T) TY 10BWG(1)XX(P-BM)
	48x16-inch ONE-WAY sign (R6-1)	TY 10BWG(1)XX(T) TY 10BWG(1)XX(P-BM)
	36x48, 48x36, and 48x48-inch signs	TY 10BWG(1)XX(T)
	48x60-inch signs	TY S80(1)XX(T)
Warning	48x48-inch signs (diamond or square)	TY 10BWG(1)XX(T)
	48x60-inch signs	TY S80(1)XX(T)
	48-inch Advance School X-ing sign (S1-1)	TY 10BWG(1)XX(T)
	48-inch School X-ing sign (S2-1)	TY 10BWG(1)XX(T)
	Large Arrow sign (W1-6 & W1-7)	TY 10BWG(1)XX(T)

STANDARD PLANS
Texas Department of Transportation
Traffic Operations Division

SIGN MOUNTING DETAILS SMALL ROADSIDE SIGNS TRIANGULAR SLIPBASE SYSTEM

SMD(SLIP-2)-08

©TxDOT July 2002 DW: TxDOT CK: TxDOT DW: TxDOT CK: TxDOT

REVISIONS	STATE DISTRICT	FEDERAL REGION	FEDERAL AID PROJECT	SHEET
9-08	AUSTIN	6		619

COUNTY	CONTROL-SECT-JOB	HIGHWAY
WILLIAMSON	0683-06-027	SH 45, LOOP 1

DISPLAYED ACC:

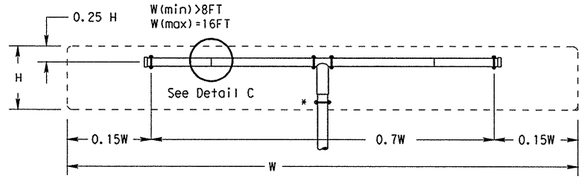

SM RD SGN ASSM TY XXXXX(1)XX(T-2EXT)
(* - See Note 12)

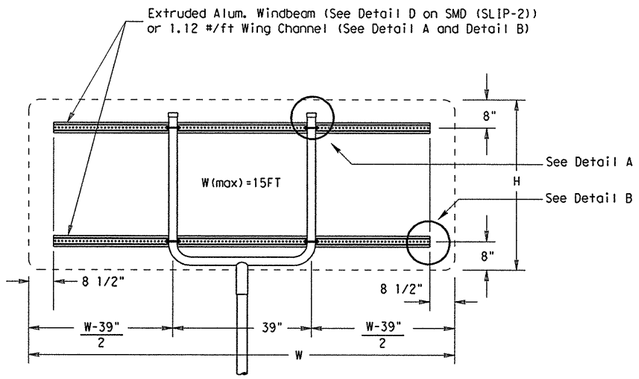

SM RD SGN ASSM TY XXXXX(1)XX(U-XX)

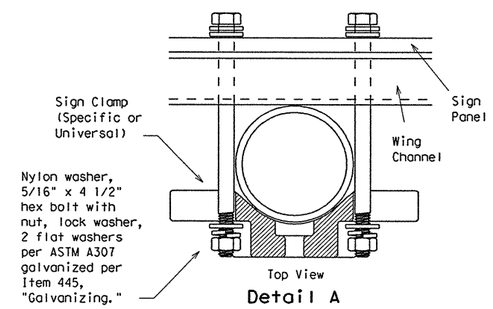

Detail A

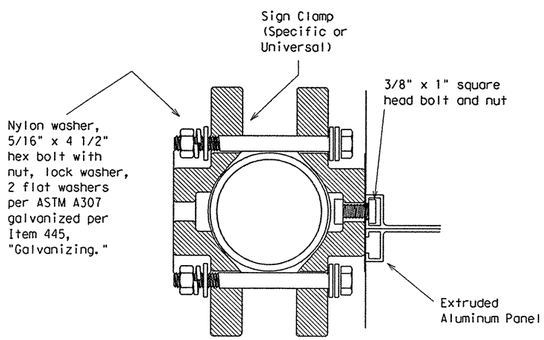

Detail D
EXTRUDED ALUMINUM SIGN WITH T BRACKET

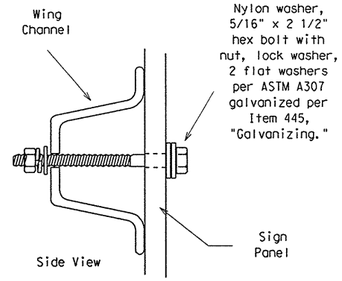

Detail B

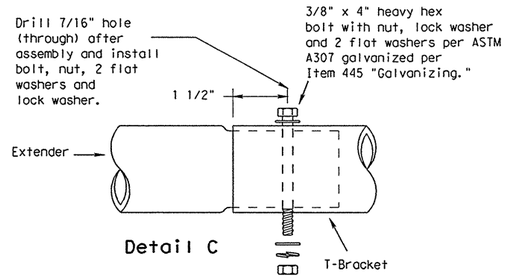

Detail C

Splices shall only be allowed behind the sign substrate.

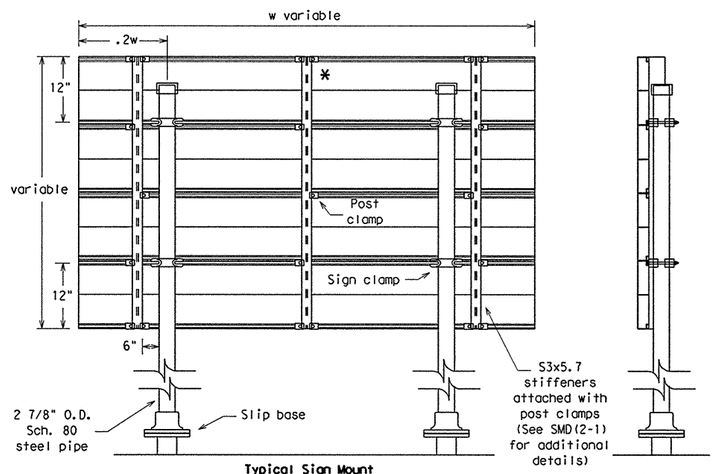

Typical Sign Mount

SM RD SGN ASSM TY S80(2)XX(P-EXAL)

* Additional stiffener placed at approximate center of signs when sign width is greater than 10'.

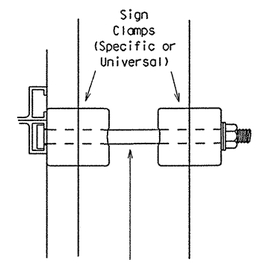

3/8" x 4 1/2"
square head
bolt, nut,
flat washer
and lock washer per
ASTM A307 galvanized
per Item 445,
"Galvanizing."

Detail E

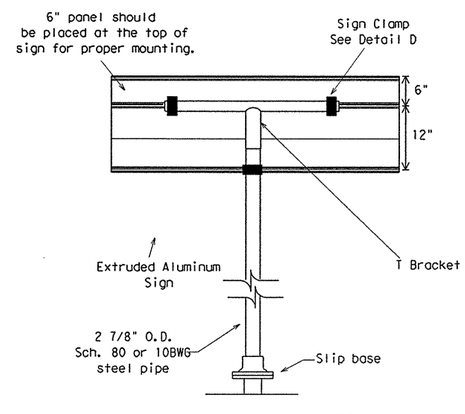

Extruded Aluminum Sign
With T Bracket

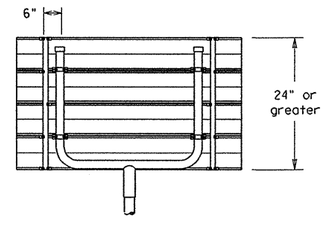

Use Extruded Alum. Windbeam as stiffeners
See SMD (2-1) for additional details

See Detail E
for clamp installation

GENERAL NOTES:

1.

SIGN SUPPORT	# OF POSTS	MAX. SIGN AREA
10 BWG	1	16 SF
10 BWG	2	32 SF
Sch 80	1	32 SF
Sch 80	2	64 SF

2. The Engineer may require that a Schedule 80 post be used in place of a 10 BWG where a sign height is abnormally high due to a fill slope.
3. Sign supports shall not be spliced except where shown. Sign support posts shall not be spliced.
4. Aluminum sign blanks shall conform to Departmental Material Specifications DMS-7110 and shall have the following minimum thicknesses: 0.080 for signs less than 7.5 sq. ft., 0.100 for signs 7.5 to 15 sq. ft., and 0.125 for signs greater than 15 sq. ft.
5. Signs that require specific supports due to reasons in addition to windloading are indicated on the "REQUIRED SUPPORT" table on this sheet.
6. For horizontal rectangular signs fabricated from flat aluminum, T-brackets are used for signs 24 inches or less in height. U-brackets are used for signs of greater height.
7. When two triangular slipbase supports are used to support a single sign, they shall not be "rigidly" connected to each other except through the sign panel. This will allow each support to act independently when impacted by an errant vehicle.
8. Wing channel shall meet ASTM A 1011 SS Gr 50 and be galvanized per ASTM A 123.
9. Excess pipe, wing channel, or windbeam shall be cut off so that it does not extend beyond the sign panel (i.e., excess support shall not be visible when the sign is viewed from the front.) Repair galvanized coating at cut support ends per Item 445, "Galvanizing."
10. Sign blanks shall be the sizes and shapes shown on the plans.
11. Additional sign clamp required on the "T-bracket" post for 24 inch high signs. Place the clamp 3 inches above bottom of sign when possible.
12. Post open ends shall be fitted with Friction Caps.

REQUIRED SUPPORT

	SIGN DESCRIPTION	SUPPORT
Regulatory	48-inch STOP sign (R1-1)	TY 10BWG(1)XX(T) TY 10BWG(1)XX(P-BM)
	60-inch YIELD sign (R1-2)	TY 10BWG(1)XX(T) TY 10BWG(1)XX(P-BM)
	48x16-inch ONE-WAY sign (R6-1)	TY 10BWG(1)XX(T) TY 10BWG(1)XX(P-BM)
	36x48, 48x36, and 48x48-inch signs	TY 10BWG(1)XX(T)
	48x60-inch signs	TY S80(1)XX(T)
Warning	48x48-inch signs (diamond or square)	TY 10BWG(1)XX(T)
	48x60-inch signs	TY S80(1)XX(T)
	48-inch Advance School X-ing sign (S1-1)	TY 10BWG(1)XX(T)
	48-inch School X-ing sign (S2-1)	TY 10BWG(1)XX(T)
	Large Arrow sign (W1-6 & W1-7)	TY 10BWG(1)XX(T)

STANDARD PLANS
Texas Department of Transportation
Traffic Operations Division

SIGN MOUNTING DETAILS SMALL ROADSIDE SIGNS TRIANGULAR SLIPBASE SYSTEM

SMD(SLIP-3)-08

©TxDOT July 2002 DN: TxDOT CK: TxDOT DW: TxDOT CK: TxDOT

REVISIONS	STATE DISTRICT	FEDERAL REGION	FEDERAL AID PROJECT	SHEET
9-08	AUSTIN	6		620
	COUNTY		CONTROL-SECT-JOB	HIGHWAY
	WILLIAMSON		0683-06-027	SH 45 LOOP 1

DISCLAIMER
The use of this standard is governed by the "Texas Engineering Practice Act". No warranty of any kind is made by TxDOT for any purpose whatsoever. TxDOT assumes no responsibility for the conversion of this standard to other formats or for incorrect results or damages resulting from its use.

DISPLAYED
ACC:

DISCLAIMER
The use of this standard is governed by the "Texas Engineering Practice Act". No warranty of any kind is made by TxDOT for any purpose whatsoever. TxDOT assumes no responsibility for the conversion of this standard to other formats or for incorrect results or damages resulting from its use.

Wedge Anchor Steel System

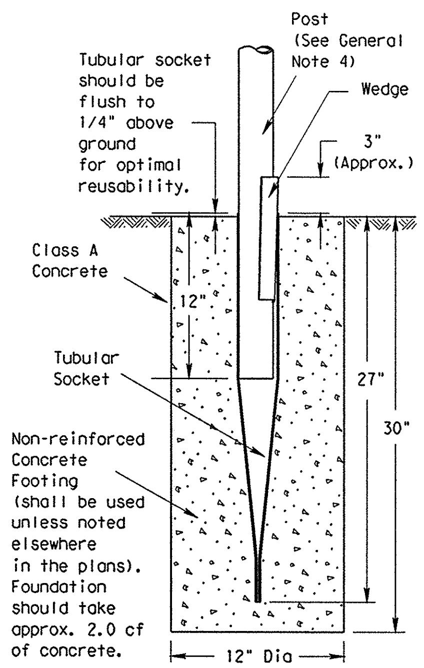

SM RD SGN ASSM TY TWT(X)WS(X)

Wedge Anchor High Density Polyethylene (HDPE) System

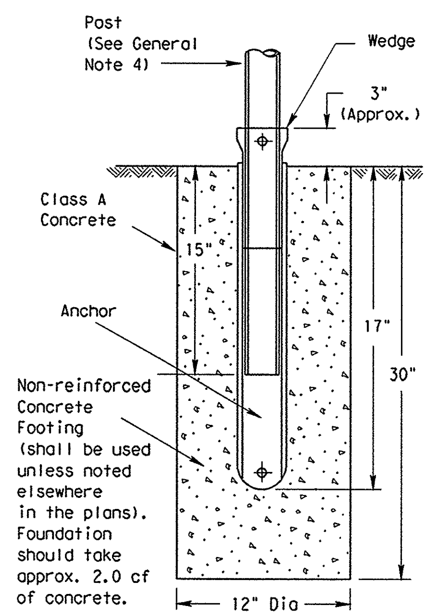

SMD RD SGN ASSM TY TWT(X)WP(X)

Universal Anchor System with Thin-Walled Tubing Post

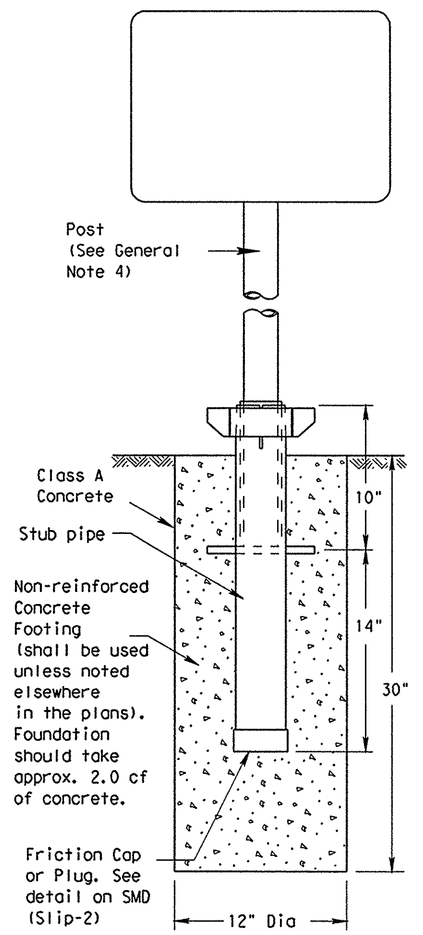

SM RD SGN ASSM TY TWT(X)UA(P)

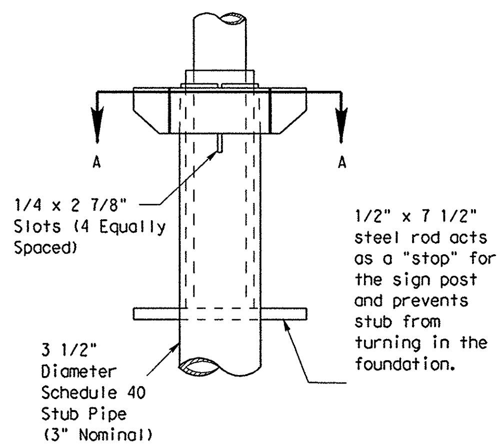

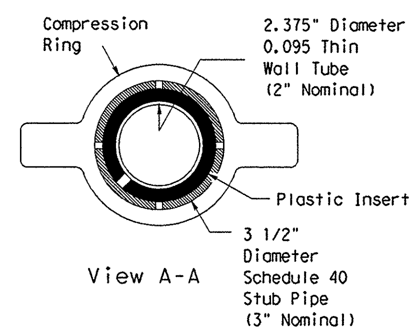

View A-A

Plastic insert must be used when using the TWT with either the Universal Anchor System or the Bolt Down Universal Anchor System. The insert should be approx. 10" long and cover the tubing from just above the top of the stub pipe to the bottom of the sign post when using the Universal Anchor System. The insert should be cut to approx. 4 1/2" when used with the Bolt Down Universal Anchor System.

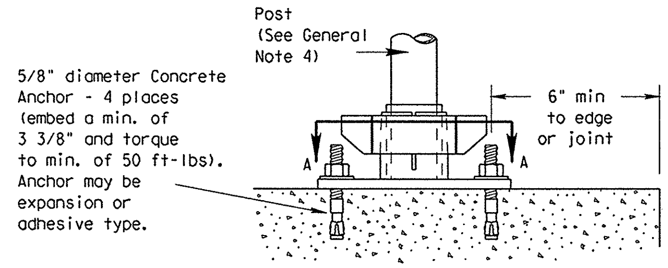

Concrete anchor consists of 5/8" diameter stud bolt with UNC series bolt threads on the upper end. A heavy hex nut per ASTM A563 and hardened washer per ASTM F436. The stud bolt shall have minimum yield and ultimate tensile strengths of 50 and 75 ksi, respectively. Nuts, bolts and washers shall be galvanized per Item 445, "Galvanizing." Top of bolt shall extend at least flush with top of nut when installed. The anchor, when installed in 4000 psi normal-weight concrete with a 3 3/8" minimum embedment, shall have a minimum allowable tension and shear of 2450 and 1525 psi, respectively. Adhesive type anchors shall have stud bolts installed with Type III epoxy per DMS-6100, "Epoxies and Adhesives." Adhesive anchors may be loaded after adequate epoxy cure time per the manufacturer's recommendations.

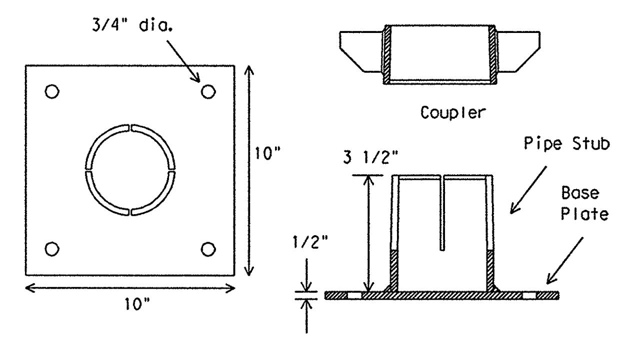

SM RD SGN ASSM TY TWT(X)UB(P)

Sign Installation Using a Prefabricated T-Bracket for Thin-Wall Tubing Post

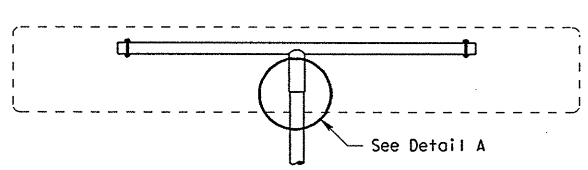

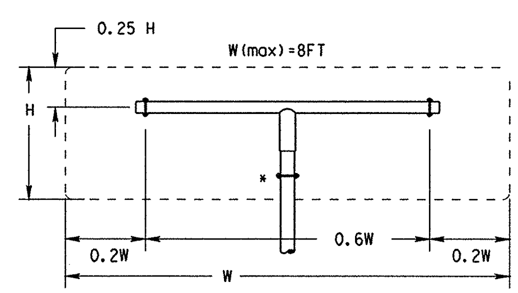

SM RD SGN ASSM TY TWT(X)XX(T)

(* - See General Note 6)

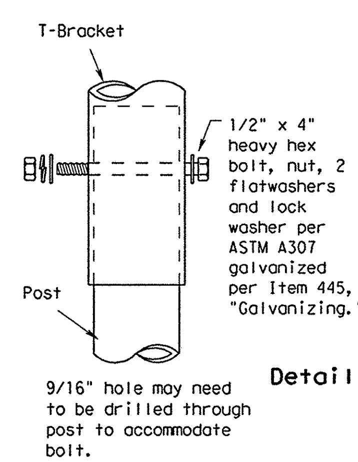

Detail A

NOTE

The devices shall be installed per manufacturer's recommendations.
Installation procedures shall be provided to the Engineer by Contractor.

GENERAL NOTES:

1. The Wedge Anchor System and the Universal Anchor System with thin wall tubing post may be used to support up to 10 square feet of sign area.
2. The tubular socket, wedge and prefabricated T-bracket shall be permanently marked to indicate manufacturer. Method, design, and location of marking are subject to the approval of the TxDOT Traffic Standards Engineer.
3. Except for posts (13 BWG Tubing), clamps, nuts and bolts, all components shall be prequalified. A list of prequalified vendors may be obtained from the Material Producer List web page. The website address is: http://www.txdot.gov/business/producer list.htm
4. Material used as post with this system shall conform to the following specifications:
   13 BWG Tubing (2.375" outside diameter) (TWT)
   0.095" nominal wall thickness
   Seamless or electric-resistance welded steel tubing
   Steel shall be HSLAS Gr 55 per ASTM A1011 or ASTM A1008
   Other steels may be used if they meet the following:
   55,000 PSI minimum yield strength
   70,000 PSI minimum tensile strength
   18% minimum elongation in 2"
   Wall thickness (uncoated) shall be within the range of .083" to .099"
   Outside diameter (uncoated) shall be within the range of 2.369" to 2.381"
   Galvanization per ASTM 123 or ASTM A653 G210. For precoated steel tubing (ASTM A653), recoat tube outside diameter weld seam by metallizing with zinc wire per ASTM B833.
5. Sign blanks shall be the sizes and shapes shown on the plans.
6. Additional sign clamp required on the "T-bracket" post for 24" high signs. Place clamp at least 3" above bottom of sign when possible.
7. Sign supports shall not be spliced except where shown. Sign support posts shall not be spliced.
8. See the Traffic Operations Division website for detailed drawings of sign clamps and Wedge Anchor System components. The website address is: http://www.txdot.gov/publications/traffic.htm

WEDGE ANCHOR SYSTEM INSTALLATION PROCEDURE

1. Dig foundation hole. Where solid rock is encountered at ground level, the foundation shall be a minimum depth of 18". When solid rock is encountered below ground level, the foundation shall extend in the solid rock a minimum depth of 18" or provide a minimum foundation depth of 30". If solid rock is encountered, the socket/stub may be reduced in length as required to a minimum length of 18". Any material removed from the socket/stub shall be from the bottom and the clearance requirements given on SMD(GEN) must be followed. The inner surfaces of the socket/stub must remain free of concrete or other debris.
2. The Engineer may permit batches of concrete less than 2 cubic yards to be mixed with a portable, motor driven concrete mixer. For small placements less than 0.5 cubic yards, hand mixing in a suitable container may be allowed by Engineer. Place concrete into hole until it is approximately flush with the ground. Concrete shall be Class A.
3. Insert tubular socket into concrete until top of socket is approximaely 1/4 " above the concrete footing.
4. Plumb the socket. Allow a minimum 4 days for concrete to set, unless otherwise directed by Engineer..
5. Attach the sign to the sign post.
6. Insert the sign post into socket and align sign face with roadway.
7. Drive the wedge into the socket to secure post. This will leave approximately 3 inches of the wedge exposed.

UNIVERSAL ANCHOR SYSTEM INSTALLATION PROCEDURE

1. Dig foundation hole. Where solid rock is encountered at ground level, the foundation shall be a minimum depth of 18". When solid rock is encountered below ground level, the foundation shall extend in the solid rock a minimum depth of 18" or provide a minimum foundation depth of 30". If solid rock is encountered, the socket/stub may be reduced in length as required to a minimum length of 18". Any material removed from the socket/stub shall be from the bottom and the clearance requirements given on SMD(GEN) must be followed. The inner surfaces of the socket/stub must remain free of concrete or other debris.
2. Insert base post in hole to depths shown and backfill hole with concrete.
3. Level and plumb the base post using a torpedo level and allow concrete adequate time to set. The bottom of the slots provided in the stub pipe shall remain above the top of the concrete foundation.
4. Attach the sign to the sign post.
5. Install plastic insert around bottom of post.
6. Insert sign post into base post. Lower until the post comes to rest on steel rod.
7. Seat compression ring using a hammer. Typically, the top of compression ring will be approximately level with top of stub post when optimally installed.
8. Check sign post by hand to ensure it is unable to turn. If loose, increase the tightening of the compression ring.

STANDARD PLANS
TEXAS DEPARTMENT OF TRANSPORTATION
Traffic Operations Division

SIGN MOUNTING DETAILS SMALL ROADSIDE SIGNS WEDGE & UNIVERSAL ANCHOR WITH THIN WALL TUBING POST

SMD(TWT)-08

©TxDOT July 2002	DN: TxDOT	CK: TxDOT	DW: TxDOT	CK: TxDOT
REVISIONS 9-08	STATE DISTRICT: AUSTIN	FEDERAL REGION: 6	FEDERAL AID PROJECT	SHEET 621
	COUNTY: WILLIAMSON		CONTROL-SECT-JOB: 0683-06-027	HIGHWAY: SH 45 LOOP 1

DISCLAIMER
The Use of this standard is governed by the "Texas Engineering Practice Act". No warranty of any kind is made by TxDOT for any purpose whatsoever. TxDOT assumes no responsibility for the conversion of this standard to other formats or for incorrect results or damages resulting from its use.

Universal Anchor System with Fiberglass Reinforced Plastic (FRP) Post

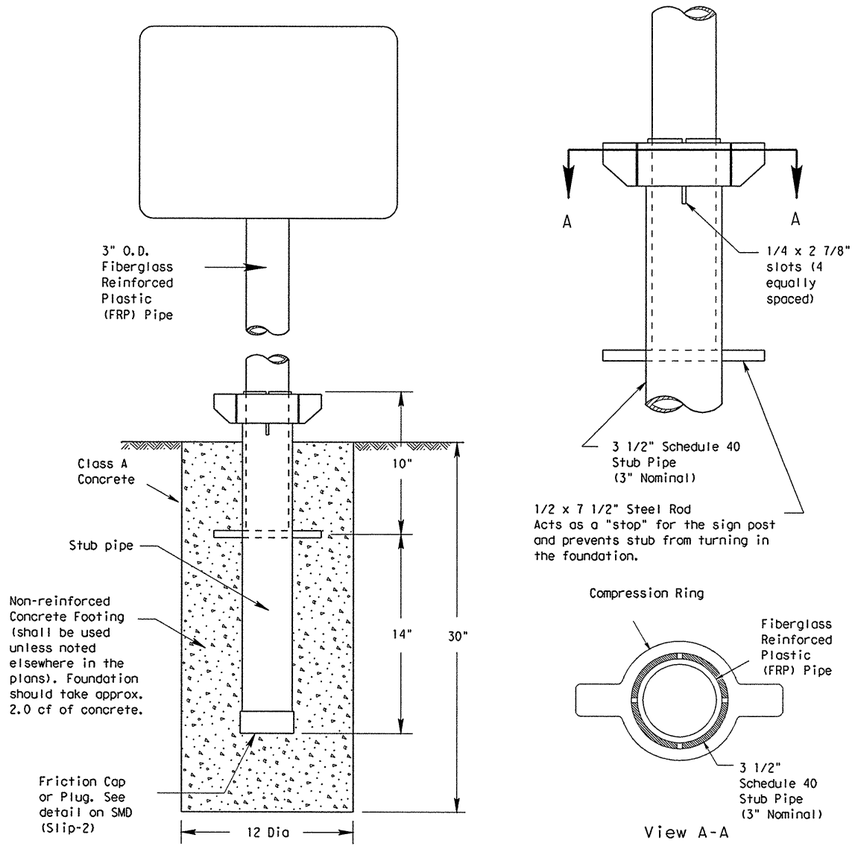

SM RD SGN ASSM TY FRP(X)UA(P)

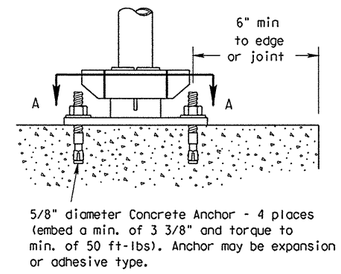

Concrete anchor consists of 5/8" diameter stud bolt with UNC series bolt threads on the upper end. A heavy hex nut per ASTM A563 and hardened washer per ASTM F436. The stud bolt shall have minimum yield and ultimate tensile strengths of 50 and 75 ksi, respectively. Nuts, bolts and washers shall be galvanized per Item 445, "Galvanizing." Top of bolt shall extend at least flush with top of nut when installed. The anchor, when installed in 4000 psi normal-weight concrete with a 3 3/8" minimum embedment, shall have a minimum allowable tension and shear of 2450 and 1525 psi, respectively. Adhesive type anchors shall have stud bolts installed with Type III epoxy per DMS-6100, "Epoxies and Adhesives." Adhesive anchors may be loaded after adequate epoxy cure time per the manufacturer's recommendations.

BOLT-DOWN DETAILS

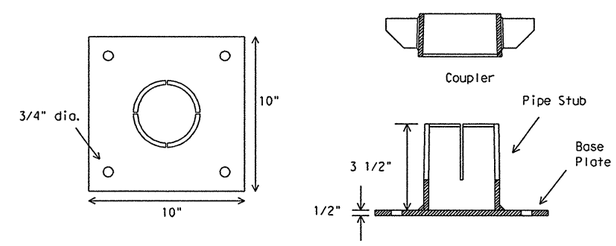

SM RD SGN ASSM TY FRP(X)UB(P)

GENERAL NOTES:

1. FRP sign supports for a single type sign support may be used for signs up to and including 16 square feet. Dual post installation may be used for signs up to and including 32 square feet.
2. All nuts, bolts and washers shall be galvanized per Item 445, "Galvanizing."
3. See the Traffic Operations Division website for detailed drawings of sign clamps. The website address is: http://www.txdot.gov/publications/traffic.htm

FRP POST REQUIREMENTS

1. Materials shall conform to the requirements of Departmental Material Specification DMS-4410 and will be furnished in a yellow or gray color as specified elsewhere in the plans.
2. Thickness of FRP sign support is 0.125" + 0.031", - 0.0".
3. FRP sign supports are prequalified by the Traffic Operations Division. Prequalification procedures are obtained by writing:
   Texas Department of Transportation
   Traffic Operations Division
   125 East 11th Street
   Austin, Texas 78701-2483

UNIVERSAL ANCHOR SYSTEM INSTALLATION PROCEDURES

1. Dig foundation hole. Where solid rock is encountered at ground level, the foundation shall be a minimum depth of 18". When solid rock is encountered below ground level, the foundation shall extend in the solid rock a minimum depth of 18" or provide a minimum foundation depth of 30". If solid rock is encountered, the socket/stub may be reduced in length as required to a minimum length of 18". Any material removed from the socket/stub shall be from the bottom and the clearance requirements given on SMD(GEN) must be followed. The inner surfaces of the socket/stub must remain free of concrete or other debris.
2. The Engineer may permit batches of concrete less than 2 cubic yards to be mixed with a portable, motor driven concrete mixer. For small placements less than 0.5 cubic yards, hand mixing in a suitable container may be allowed by Engineer. Concrete shall be Class A.
3. Insert base post in foundation hole to depths shown and fill hole with concrete. Cut base post from bottom and ensure a minimum of 18" embedment if installed in solid rock.
4. Level and plumb the base post with coupler using a torpedo level and let concrete set a minimum of 4 days, unless otherwise directed by Engineer. Bottom of base post slots shall be above the concrete footing.
5. Attach sign to FRP post.
6. Insert sign post into base post. Lower until the post comes to rest on the steel rod.
7. Use hammer to ensure the coupler is firmly seated. Top of coupler should be level with top of base post in most instances.
8. Check sign to ensure there is no twist. If loose, increase the tightening of coupler.

BOLT DOWN SIGN SUPPORT

1. Position base plate with coupler on existing concrete.
2. Drill holes into concrete and insert the 5/8" diameter bolts with wedge anchors, and tighten nuts.
3. Attach sign to FRP post.
4. Insert bottom of sign post into pipe stub.
5. Use hammer to ensure the coupler is firmly seated. Top of coupler should be level with top of base post in most instances.
6. Check sign to ensure there is no twist. If loose, increase the tightening of coupler.

Typical Sign Mounting Detail for FRP Support with Single Sign

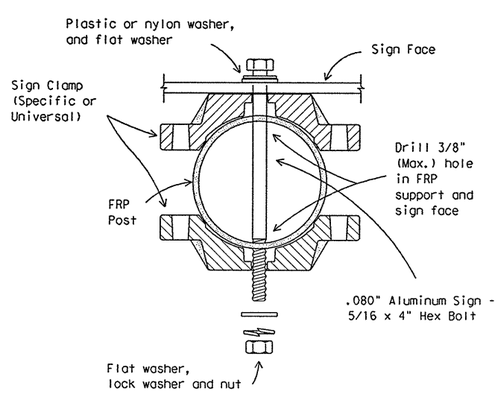

Typical Sign Mounting Detail for FRP Support with Back-to-Back Signs

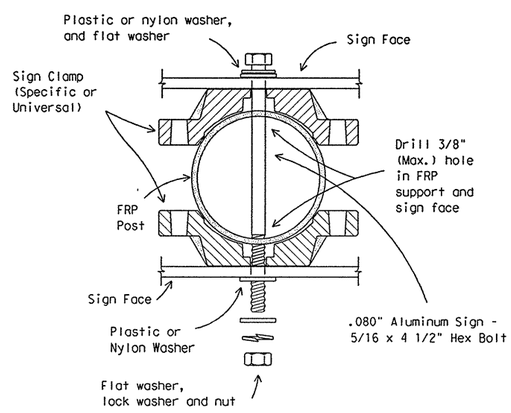

STANDARD PLANS
TEXAS DEPARTMENT OF TRANSPORTATION
Traffic Operations Division

SIGN MOUNTING DETAILS SMALL ROADSIDE SIGNS UNIVERSAL ANCHOR SYSTEM WITH FRP POST

SMD(FRP)-08

©TxDOT July 2002	DN: TxDOT	CK: TxDOT	DW: TxDOT	CK: TxDOT	
REVISIONS 9-08	STATE DISTRICT	FEDERAL REGION	FEDERAL AID PROJECT		SHEET
	AUSTIN	6			622
	COUNTY		CONTROL-SECT-JOB		HIGHWAY
	WILLIAMSON		0683-06-027		SH 45 LOOP 1

DISPLAYED
1 2 3 4 5 6 7 8 9 10 11 12 13 14 15 16
17 18 19 20 21 22 23 24 25 26 27 28 29 30 31 32
33 34 35 36 37 38 39 40 41 42 43 44 45 46 47 48
49 50 51 52 53 54 55 56 57 58 59 60 61 62 63
ACC:

DISCLAIMER
The use of this standard is governed by the "Texas Engineering Practice Act". No warranty of any kind is made by TxDOT for any purpose whatsoever. TxDOT assumes no responsibility for the conversion of this standard to other formats or for incorrect results or damages resulting from its use.

NOTE: centerline of hole for 3/8" diameter squarehead bolt x 2 1/4" long with a flat washer and self-locking nut, or lock washer and hex. nut. Bolt head dimensions shall be in accordance with ANSI B 18.2.1 as referred to in the AISC Manual of steel construction. Bolt assembly shall be galvanized.

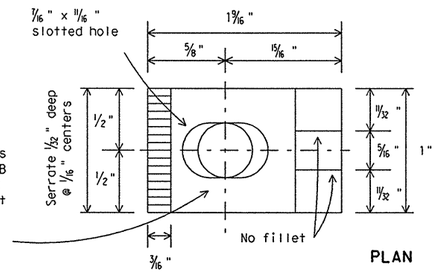

PLAN

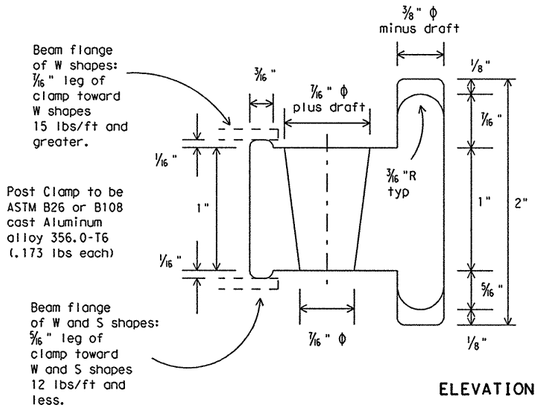

ELEVATION

POST CLAMP DETAIL

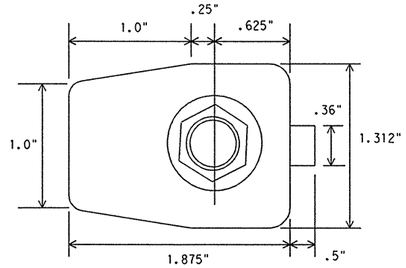

PLAN

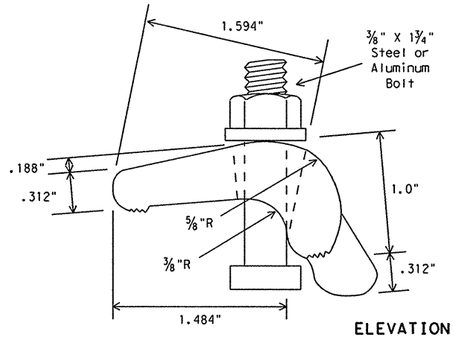

ELEVATION

ALTERNATE POST CLAMP DETAIL

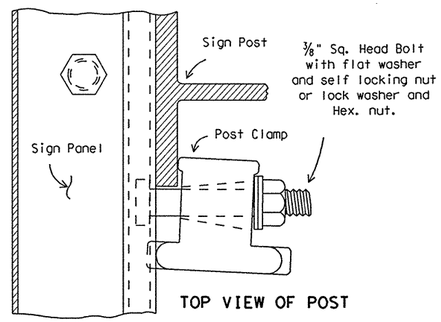

TOP VIEW OF POST

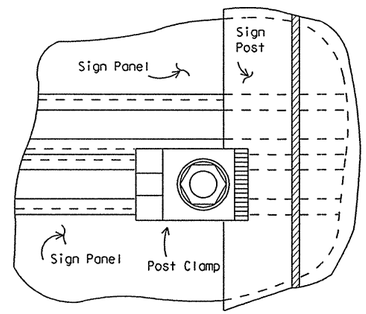

TOP VIEW OF CLAMP

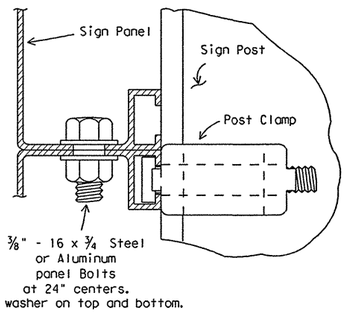

SIDE VIEW OF PANELS

CONNECTION DETAILS

DEPARTMENTAL MATERIAL SPECIFICATIONS

SIGN HARDWARE DMS-7120

GENERAL NOTES:

1. Design conforms with AASHTO Specifications for the design and construction of structural supports for highway signs.
2. Materials and fabrication shall conform to the requirements of the Department material specifications.
3. Structural steel shall be "low-alloy steel" for non-bridge structures per Item 442, "Metal For Structures."
4. For fiberglass substrate connection details, see manufacturer's recommendations.

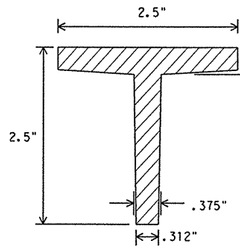

1.912 lbs/ft

ALUMINUM T SECTION OR APPROVED ALTERNATIVE

WINDBEAM CROSS SECTION

Windbeam to be extruded aluminum (1.175 lbs/ft) or approved alternative

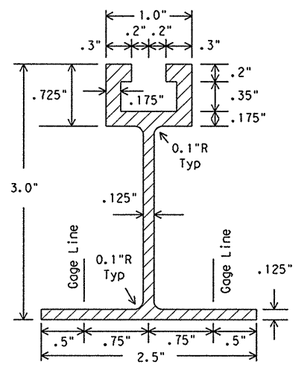

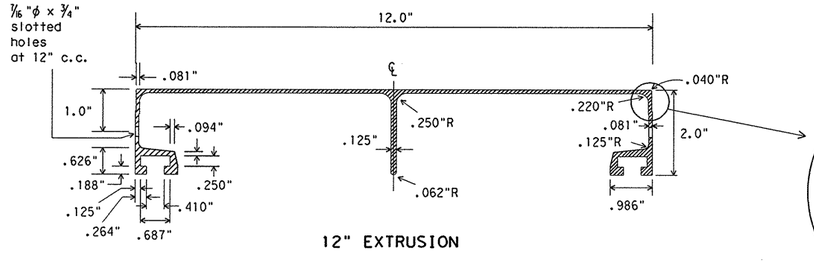

12" EXTRUSION

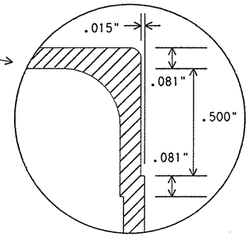

ALUMINUM SIGN PANEL EXTRUSION DETAILS

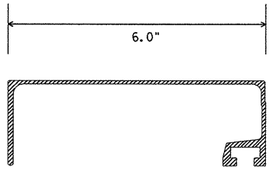

6" EXTRUSION

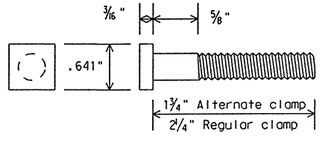

POST CLAMP BOLT DETAIL

STANDARD PLANS
Texas Department of Transportation
Traffic Operations Division

SIGN MOUNTING DETAILS- EXTRUDED ALUMINUM SIGN PANELS & HARDWARE

SMD(2-1)-08

© TxDOT 2001

DN: TxDOT	CK: TxDOT	DW: TxDOT	CK: TxDOT

REVISIONS	STATE DISTRICT	FEDERAL REGION	FEDERAL AID PROJECT	SHEET
9-08	AUSTIN	6		623
	COUNTY		CONTROL-SECT-JOB	HIGHWAY
	WILLIAMSON		0683-06-027	SH 45 LOOP 1

DISPLAYED
ACC:

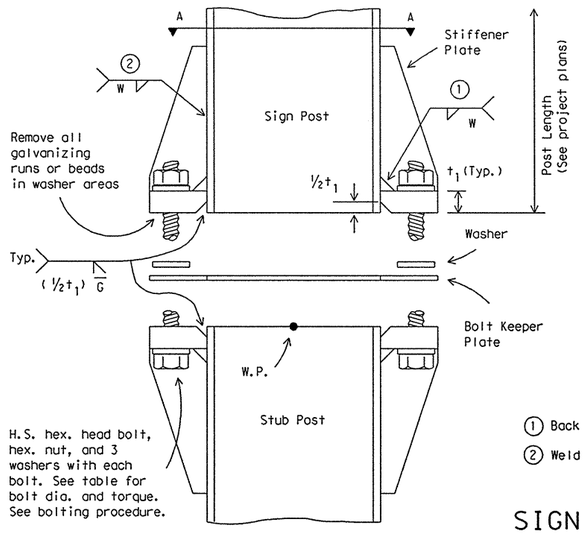

ELEVATION

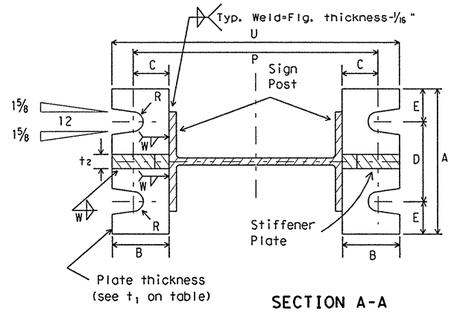

SECTION A-A

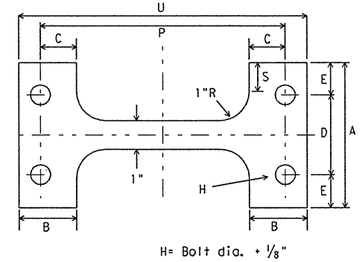

BOLT KEEPER PLATE
30 Ga galv. sheet steel

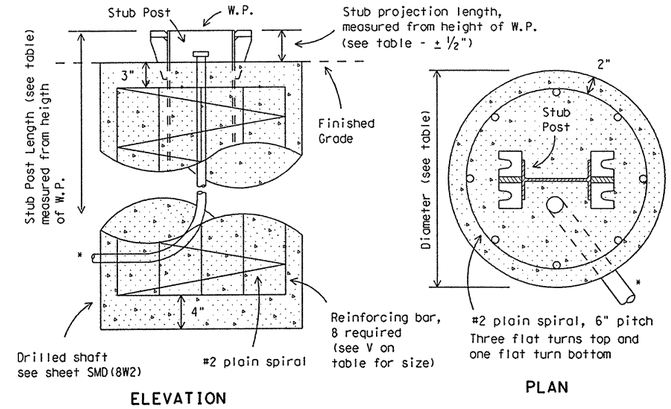

ELEVATION

PLAN

FOUNDATION DETAIL

*Note: For signs with electrical apparatus, see ED(10) for conduit required in founation.

① Back up weld to be made before installing stiffener plate

② Weld W may be continued across clips to seal joint

SIGN POST AND STUB POST

(For W Shapes)

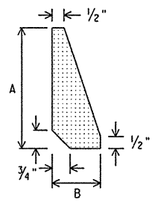

STIFFENER PLATE DETAIL

Steel Plate (thickness = t_2)

(See table for dimensions)

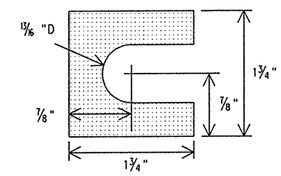

SHIM DETAIL

Furnish two .012"+ thick and two .032"+ thick shims per post. Shims shall be fabricated from brass shim stock or strip conforming to ASTM B36.

BOLTING PROCEDURE FOR ASSEMBLY OF BASE CONNECTION:

1. Assemble sign post, BOLT KEEPER PLATE and stub post with bolts and three flat washers per bolt as shown.
2. Shim as required to plumb post.
3. Tighten all bolts the maximum possible with a 12 to 15 inch wrench to clean bolt threads and to bed washers and shims.
4. Loosen each bolt in sequence and retighten bolts in a systematic order to the prescribed torque. Do not overtighten.
5. To prevent nut loosening, burr threads of bolt at junction with nut using a center punch.

Dimensions / Post Size	Base Connection Data Table: Bolt Size & Torque	A	B	C	D	E	t_1	t_2	W	R	Perforated Fuse Plate Data Table: F	G	J	K	M	d_1	d_2	t_3	Bolt Dia.	Wt. (ea.) (lbs.)	Bolt length	Bolt Keeper Data: P	S	U	Foundation Data: Stub length	Stub projection	Dr. Shaft diameter	Bar V Size
W6x9	5/8"ϕ x 2¾"	5"	2"	1¼"	2¾"	1⅛"	¾"	½"	¼"	"	4¼"	2"	4"	2¼"	1"	"	¾"	¼"	½"	1.01	1½"	8⅜"	1"	9⅞"	2'-0"	3"	24"	#5
W6x12	440-450 inch pounds 36-38 foot pounds																					8½"		10"	2'-0"	3"		#5
W6x15											5"	2½"	6"	3½"	1½"	"	1¼"	⅜"	⅝"	2.51	2¼"	8½"		10"	2'-6"	3"		#6
W8x18											5"	2½"	5¼"	2¾"	1¼"	"	1 1/16"	⅜"	⅝"	2.26	2¼"	10⅝"		12⅛"	2'-6"	3"		#7
W8x21	¾"ϕ x 3½"	6"	2¼"	1⅜"	3½"	1¼"	1"	¾"	5/16"	13/32"	5½"	2½"	5¼"	2¾"	1¼"	13/16"	1"	½"	¾"	3.35	2¼"	11"	1½"	12¾"	3'-0"	2½"		#8
W10x22	740-750 inch pounds 62-63 foot pounds										6"	3"	5¾"	2¾"	1⅜"	13/16"	1⅛"	½"	¾"	4.03	2¼"	12⅞"		14⅝"	3'-0"	2½"		#9
W10x26																						13⅛"		14⅞"	3'-0"	2½"		#10
W12x26											6"	3"	6½"	3½"	1⅝"	13/16"	1 5/16"	½"	¾"	4.47	2¼"	15"		16¾"	3'-0"	2½"		#11
S3x5.7	½"ϕ x 2½" 440-450 inch pounds 36-38 foot pounds	See Detail Below									3¾"	1½"	2⅝"	1½"	⅝"	"	⅜"	¼"	½"	0.60	1½"	See Detail Below			3'-3½"	3½"	12"	Non-reinforced ③
S4x7.7																												

③ Foundation design shall be Type G Mount, see SMD (TY C).

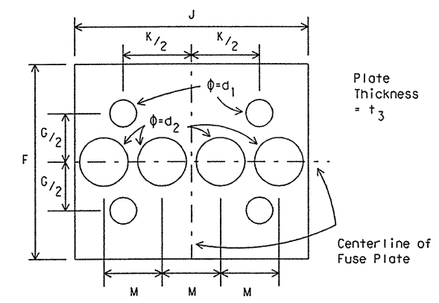

PERFORATED FUSE PLATE DETAIL

Use H.S. hex head bolts, hex head nut and bevel or flat washer (where req'd) under nut. All holes shall be drilled, sub-punched and reamed. All plate cuts shall preferably be saw cuts. However, flame cutting will be permitted provided all edges are ground. Metal projecting beyond the plane of the plate face will not be permitted. Steel fuse plates shall conform to the requirements of ASTM A36. ASTM A572 Grade 50 or ASTM A588 may be substituted for A36 at the option of the fabricator. Mill test reports shall be submitted for Fuse Plates. Steel used shall have an ultimate tensile strength not to exceed 80 KSI. For alternative Fuse Plate contact Traffic Operations Division.

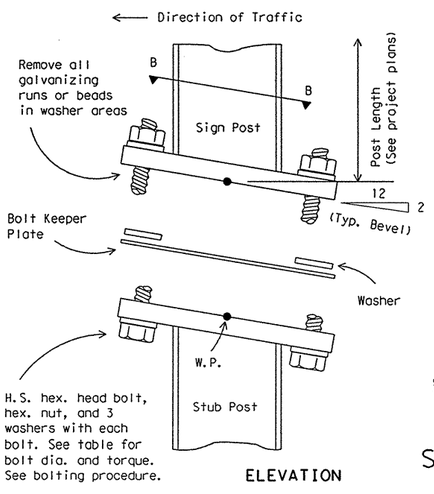

ELEVATION

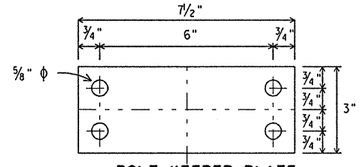

BOLT KEEPER PLATE
30 Ga galv. sheet steel

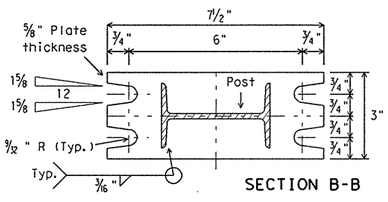

SECTION B-B

SIGN POST AND STUB POST

(For S4x7.7 and S3x5.7)

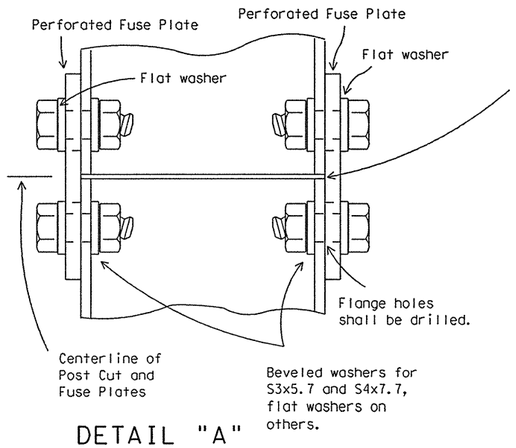

Parts shall be saw cut either before galvanizing and the galvanized cut cleaned of zinc build-up, or saw cut after galvanizing and the cut surface repaired per Item 445, "Galvanizing."

DETAIL "A"

STANDARD PLANS
Texas Department of Transportation
Traffic Operations Division

SIGN MOUNTING DETAILS-LARGE ROADSIDE SIGNS FOUNDATION & STUB

SMD(2-2)-08

© TxDOT August 1995 DN:- TxDOT CK:- TxDOT DW:- TxDOT CK:- TxDOT

REVISIONS	STATE DISTRICT	FEDERAL REGION	FEDERAL AID PROJECT	SHEET
4-98 9-08	AUSTIN	6		624
	COUNTY		CONTROL-SECT-JOB	HIGHWAY
	WILLIAMSON		0683-06-027	SH 45 LOOP 1

DISCLAIMER
The use of this standard is governed by the "Texas Engineering Practice Act". No warranty of any kind is made by TxDOT for any purpose whatsoever. TxDOT assumes no responsibility for the conversion of this standard to other formats or for incorrect results or damages resulting from its use.

DISPLAYED
1 2 3 4 5 6 7 8 9 10 11 12 13 14 15 16 17 18 19 20 21 22 23 24 25 26 27 28 29 30 31 32 33 34 35 36 37 38 39 40 41 42 43 44 45 46 47 48 49 50 51 52 53 54 55 56 57 58 59 60 61 62 63

ACC:

27B

DISCLAIMER
The use of this standard is governed by the "Texas Engineering Practice Act". No warranty of any kind is made by TxDOT for any purpose whatsoever. TxDOT assumes no responsibility for the conversion of this standard to other formats or for incorrect results or damages resulting from its use.

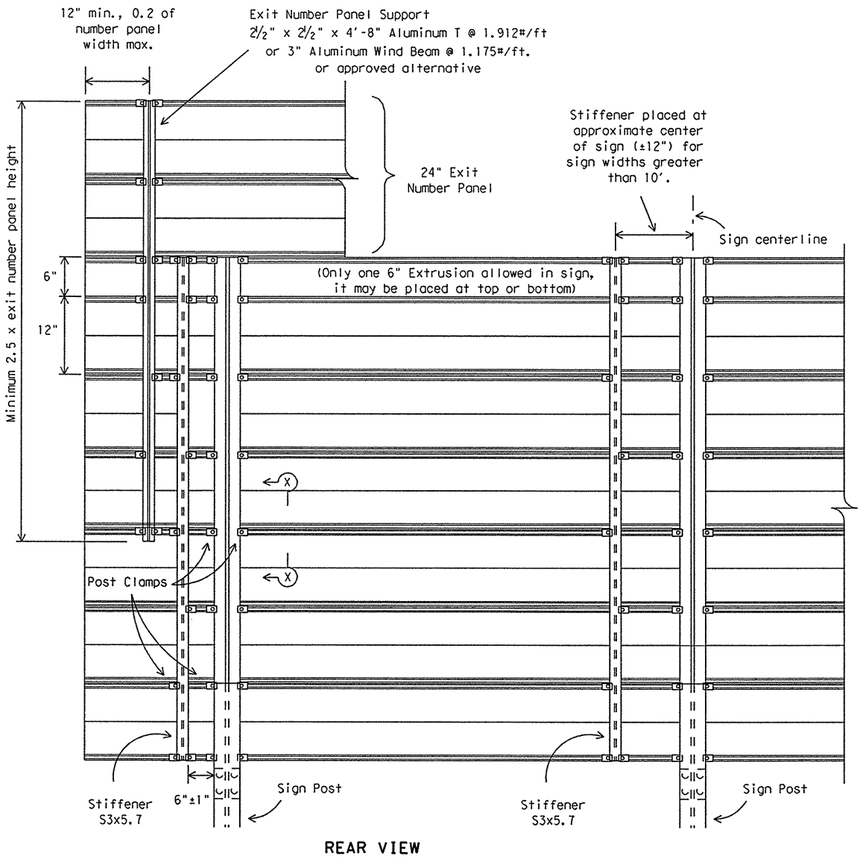

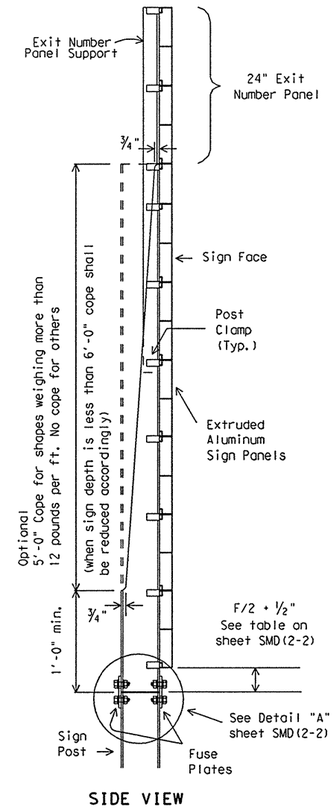

ALUMINUM PARENT SIGN & EXIT NUMBER PANEL MOUNTING DETAILS

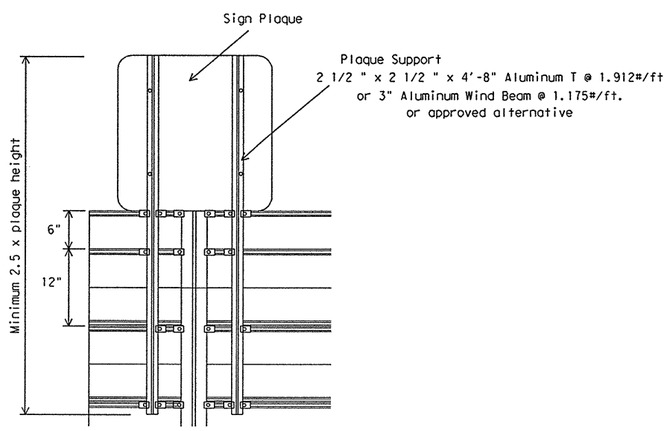

SIGN PLAQUE MOUNTING DETAIL TO ALUMINUM PARENT SIGN

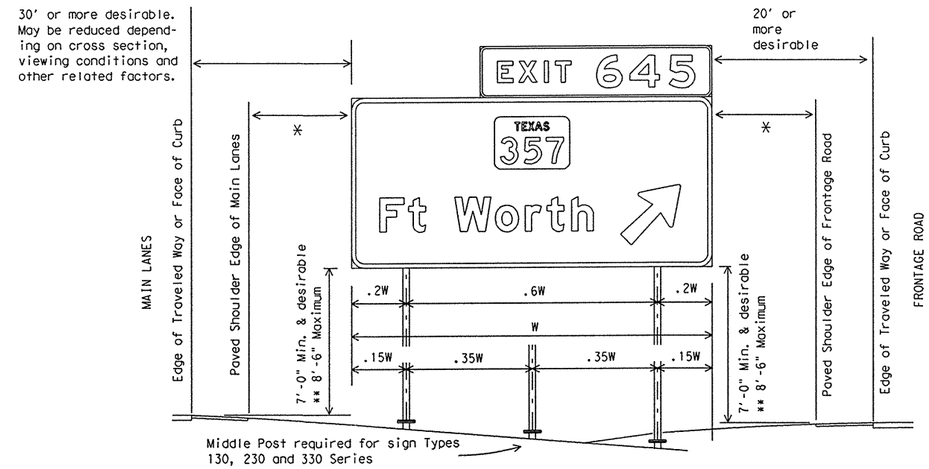

TYPICAL SIGN INSTALLATION AND LOCATION

LATERAL CLEARANCE NOTES:

Lateral clearances of signs mounted on median side of main lanes are the same as shown above where space will permit.

Where a sign is to be located behind guardrail, an allowable minimum clearance of five feet may be used, measured from the face of the guardrail to the near edge of sign.

* - 6' minimum and desirable may be used only in areas of limited lateral clearance and when approved by the Engineer.

POST SPACING NOTES:

Post spacing on a two post sign may vary a maximum of plus or minus 10% of total sign width to fit field conditions.

Post spacing on a three post sign may vary a maximum of plus or minus 5% of total sign width to fit field conditions.

SIGN HEIGHT NOTES:

** The 8' 6" maximum may be exceeded when placing signs on extreme slopes. In these conditions, a 7' minimum from natural ground to bottom of sign must be maintained.

DEPARTMENTAL MATERIAL SPECIFICATIONS

ALUMINUM SIGN BLANKS	DMS-7110
SIGN HARDWARE	DMS-7120

GENERAL NOTES:

1. Exit number panel shall be mounted to the right hand side of the parent sign for right exits and to the left hand side for left exits. The number panel shall be mounted with two uprights so its right edge is even with the right edge of the parent sign or vice-versa for left hand exits.
2. Exit number panel support shall be symmetrical about number panel centerline.
3. Exit number panel support shall be ASTM A36 structural steel galvanized after fabrication, or ASTM B221 aluminum alloy 6061-T6 or approved alternative.
4. All bolts, nuts and washers shall be galvanized per ASTM Designation: B695 Class 50, or A153 Class C or D.
5. Posts, parent sign panels, and exit number panels shall comply with notes on sheets SMD(2-1) and SMD(2-2).
6. Signs (such as exit number panels) attached above a parent sign shall be made of the same type material as the parent sign. General Service and Routing signs may be fabricated from flat sheet aluminum.
7. Exit number panel support and other connection hardware required to fasten exit number panel to parent sign shall be subsidiary to "Aluminum Signs" or "Fiberglass Signs."
8. For fiberglass sign installation details, see manufacturer's recommendations.

STANDARD PLANS
Texas Department of Transportation
Traffic Operations Division

SIGN MOUNTING DETAILS-LARGE ROADSIDE SIGNS

SMD(2-3)-08

©TxDOT August 1995	DN: TxDOT	CK: TxDOT	DW: TxDOT	CK: TxDOT	
REVISIONS 9-08	STATE DISTRICT: AUSTIN	FEDERAL REGION: 6	FEDERAL AID PROJECT		SHEET 625
	COUNTY: WILLIAMSON		CONTROL-SECT-JOB: 0683-06-027		HIGHWAY

ACC:

DISPLAYED
1 2 3 4 5 6 7 8 9 10 11 12 13 14 15 16
17 18 19 20 21 22 23 24 25 26 27 28 29 30 31 32
33 34 35 36 37 38 39 40 41 42 43 44 45 46 47 48
49 50 51 52 53 54 55 56 57 58 59 60 61 62 63

DISCLAIMER
The use of this standard is governed by the "Texas Engineering Practice Act". No warranty of any kind is made by TxDOT for any purpose whatsoever. TxDOT assumes no responsibility for the conversion of this standard to other formats or for incorrect results or damages resulting from its use.

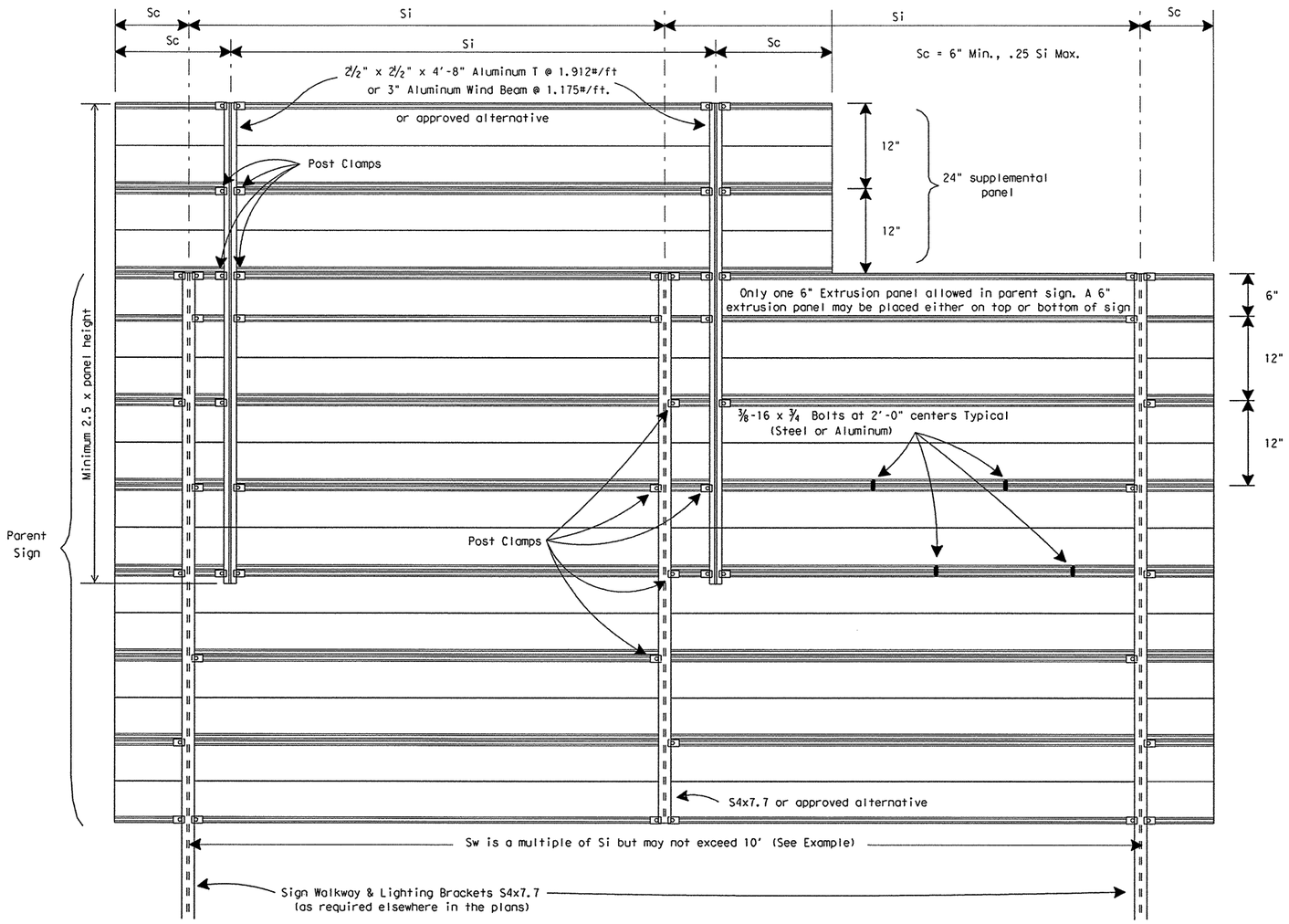

REAR VIEW

EXAMPLES (FOR DETERMINING Si and Sw)

NO.	ZONE	"d"	EXIT PANEL	WALKWAY	Si	Sw	COMMENT
1	1	15.0	YES	YES	4.5	9.0	Sw=2x(Si)
2	2	14.0	YES	NO	7.5	7.5	Sw = Si
3	1	15.0	NO	NO	8.5	8.5	Sw = Si
4	3	14.0	NO	YES	10.0	10.0	Sw = Si

Values shown for Si are maximum values. Si may be varied for different sign lengths and Truss mounting conditions. Sw should not exceed two times Si(Max.) or 10 feet.

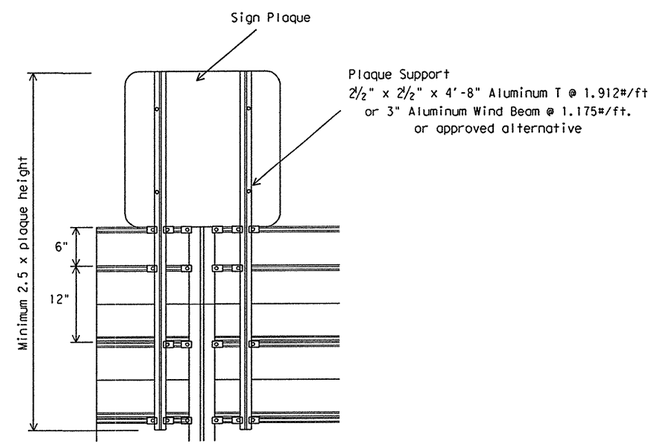

SIGN PLAQUE MOUNTING DETAIL

MAXIMUM SIGN SUPPORT SPACING "Si" (FEET)

"d" Deepest Sign in Group (Ft.)	EXTRUDED ALUMINUM SIGN PANELS															
	WITH EXIT NUMBER PANELS								WITHOUT EXIT NUMBER PANELS							
	WITH WALKWAYS				WITHOUT WALKWAYS				WITH WALKWAYS				WITHOUT WALKWAYS			
	WIND ZONE				WIND ZONE				WIND ZONE				WIND ZONE			
	1	2	3	4	1	2	3	4	1	2	3	4	1	2	3	4
15	4.5	7	8	10	5	7	8	10	7	8	9	10	8.5	10	10	10
14	6	7.5	9.5	10	6	7.5	9.5	10	8	9	10	10	10	10	10	10
13	7.5	9	10	10	7.5	9	10	10	9	10	10	10	10	10	10	10
12	8.5	10	10	10	8.5	10	10	10	10	10	10	10	10	10	10	10
11 or less	10	10	10	10	10	10	10	10	10	10	10	10	10	10	10	10

For fiberglass sign installations, see manufacturer's recommendations.

STANDARD PLANS
Texas Department of Transportation
Traffic Operations Division

SIGN MOUNTING DETAILS-OVERHEAD SIGNS EXTRUDED ALUMINUM

SMD(2-4)-08

©TxDOT 2001

DN: TxDOT	CK: TxDOT	DW: TxDOT	CK: TxDOT

REVISIONS	STATE DISTRICT	FEDERAL REGION	FEDERAL AID PROJECT	SHEET
9-08	AUSTIN	6		626

COUNTY	CONTROL-SECT-JOB	HIGHWAY
WILLIAMSON	0683-06-027	SH 45 LOOP 1

DISPLAYED
ACC:

DISCLAIMER
The use of this standard is governed by the "Texas Engineering Practice Act". No warranty of any kind is made by TxDOT for any purpose whatsoever. TxDOT assumes no responsibility for the conversion of this standard to other formats or for incorrect results or damages resulting from its use.

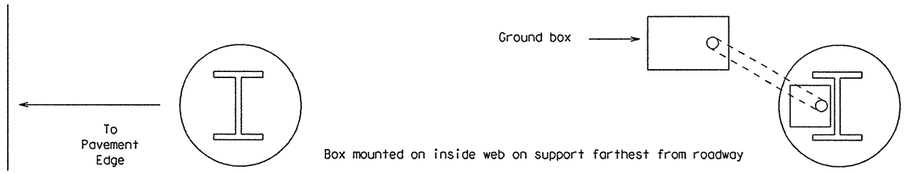

PLAN VIEW

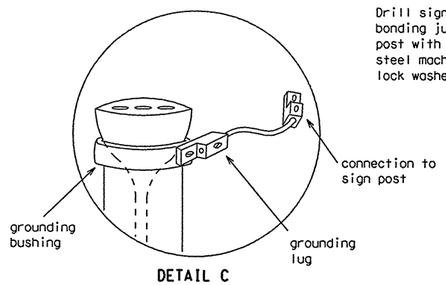

DETAIL C

Drill sign post - structure leg, terminate bonding jumper with listed connector to post with a 10-24 (3/16") min. stainless steel machine screw, nut, flat washer and lock washer made wrench tight.

2 Pull connector down tight against conduit then clamp in ground box. See Detail "D"

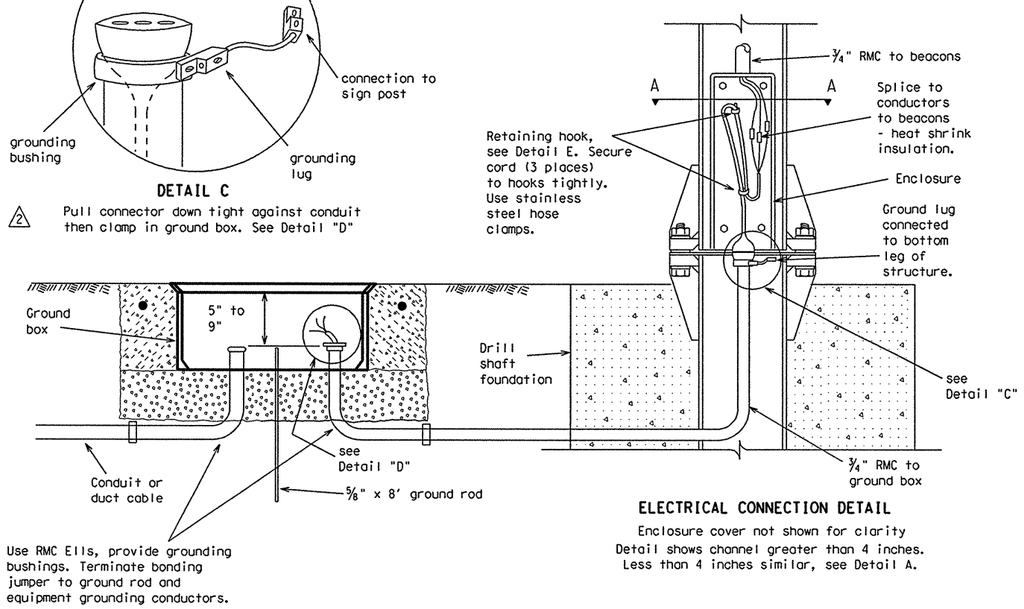

ELECTRICAL CONNECTION DETAIL

Enclosure cover not shown for clarity
Detail shows channel greater than 4 inches.
Less than 4 inches similar, see Detail A.

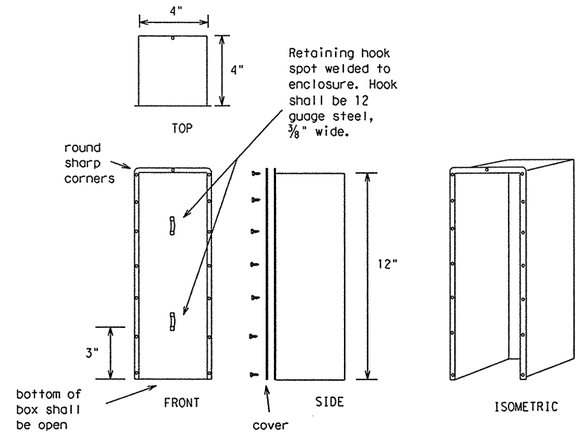

ENCLOSURE

make from 12 gauge galvanized sheet metal

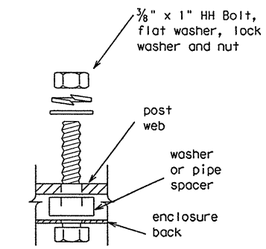

DETAIL B

enclosure connection
(4 places)

(use 2 inch bolt for
3 and 4 inch channels)

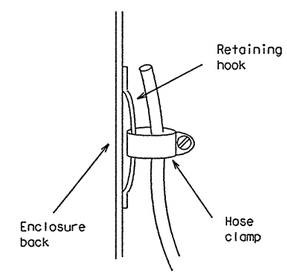

DETAIL E

NOTES:

1. Breakaway connector shall be rated for 300 VAC, 30 amps and shall be waterproof. Connector shall be a three pole (two line conductors and neutral) polarized elastomer connector made from thermosetting synthetic polymer which remains fexible over the temperature range of -40 degrees C to 90 degrees C. The pins on the connector shall be overmolded 1 ¼" from the face of the connector toward the tips of the pins with the same material used in the construction of the connector body. This overmolding of the pins shall provide a non-conductive double taper which prevents the intrusion of water into the connection when the connectors are fully engaged. The pin receptors shall have current carrying barrels recessed 1 ½" from the face of the connector and surrounded by beryllium copper spring sleeves. The plug/receptacle combination shall be listed by an approved testing facility (UL or Factory Mutual) as suitable for outdoor use and shall have passed a rain test and a watertight (immersion) test as approved by the Engineer.
2. The female connector shall be integrally molded to a 13' length of type SO cord containing three number 10 or number 8 AWG conductors. The male connector shall be integrally molded to a 20" length of Type SO cord containing three number 10 or number 8 AWG conductors. Cord conductors shall have colored insulation, two black and one white, or shall be taped or painted to be two black and one white. Tape or paint marking shall cover entire exposed length. The contractor shall make a brochure submittal on cord connectors. Breakaway connector and cord shall not be paid for separately, but shall be subsidiary to the various items.
3. The contractor shall install in-line waterproof fuseholders for each line conductor in the ground box. Fuses shall be fast-acting 5 amp (Bussman KTK5, Gould ATM5, Littlefuse KLK5 or equal).
4. 1 Conduit shall convert to ¾" liquidtight flexible metalic conduit below the fuse plate or knee joint and shall revert to ¾" RMC above the fuse plate or knee joint. The length of liquidtight flexible metal conduit shall not exceed 6".
5. Ground rod clamp shall be Blackburn GG 5/8H, Weaver W5.8 or equal.
6. Ground rod to be driven to a depth to leave between 2 to 4 inches of rod above the gravel placed under the ground box. See ED(2) standard sheet for ground box details.

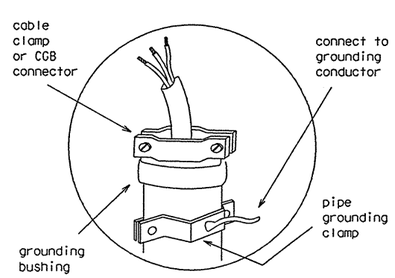

DETAIL D

Pull cable so opposite end connector is tight against conduit end, clamp cable at top of conduit as shown.

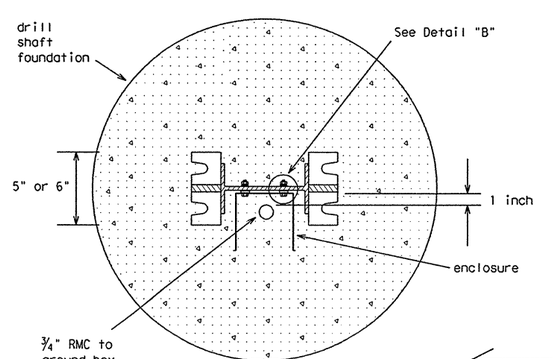

SECTION A-A

Stub-post connection
conduit, bolts and enclosure
(cover not shown)

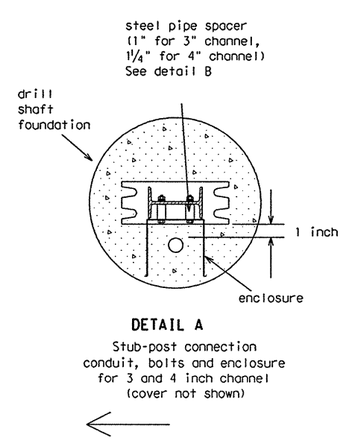

DETAIL A

Stub-post connection
conduit, bolts and enclosure
for 3 and 4 inch channel
(cover not shown)

11-01 Revision

1 Liquidtight conduit size corrected.
2 Editing of minor notes.

STANDARD PLANS
Texas Department of Transportation
Traffic Operations Division

SIGN MOUNTING DETAILS- LARGE ROADSIDE SIGNS ELECTRICAL CONNECTION

SMD(2-6)-01

©TxDOT April 1998			DN: KB	CK: KB	DW: FDN	CK: CAL
REVISIONS 11-98 11-01	STATE DISTRICT	FEDERAL REGION	FEDERAL AID PROJECT		SHEET
	AUSTIN	6			627
	COUNTY		CONTROL-SECT-JOB		HIGHWAY
	WILLIAMSON		0683-06-027		SH 45 LOOP 1

27F

DISPLAYED
1 2 3 4 5 6 7 8 9 10 11 12 13 14 15 16
17 18 19 20 21 22 23 24 25 26 27 28 29 30 31 32
33 34 35 36 37 38 39 40 41 42 43 44 45 46 47 48
49 50 51 52 53 54 55 56 57 58 59 60 61 62 63

ACC:

WING CHANNEL CLAMP DETAIL FOR TYPE G MOUNT

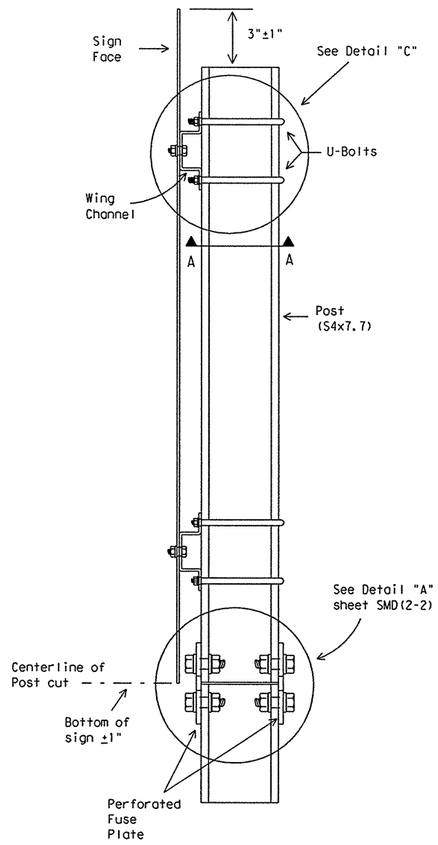

SIDE VIEW

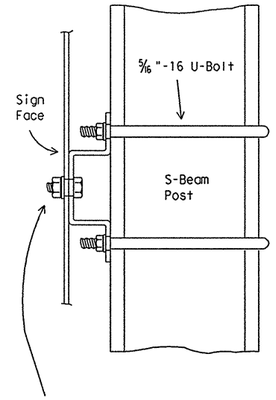

Galvanized steel or aluminum self-locking hex. head nut. 3/8 " - 16 x 3/4 " hex. head bolt for sheet metal. 3/8 " - 16 x 1 1/4 " hex. head bolt for plywood. 3/8 " galvanized medium washer.

DETAIL "C"

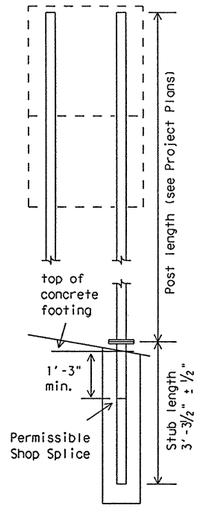

The weight of one S4x7.7 post is equal to 112.2 lbs. plus 7.7 lbs./ft x (post length in feet minus 10 ft). The weight of 112.2 lbs. includes 10 feet of post length, post foundation stub, related connection plates, friction fuse plate, and all high strength bolts, nuts and washers.

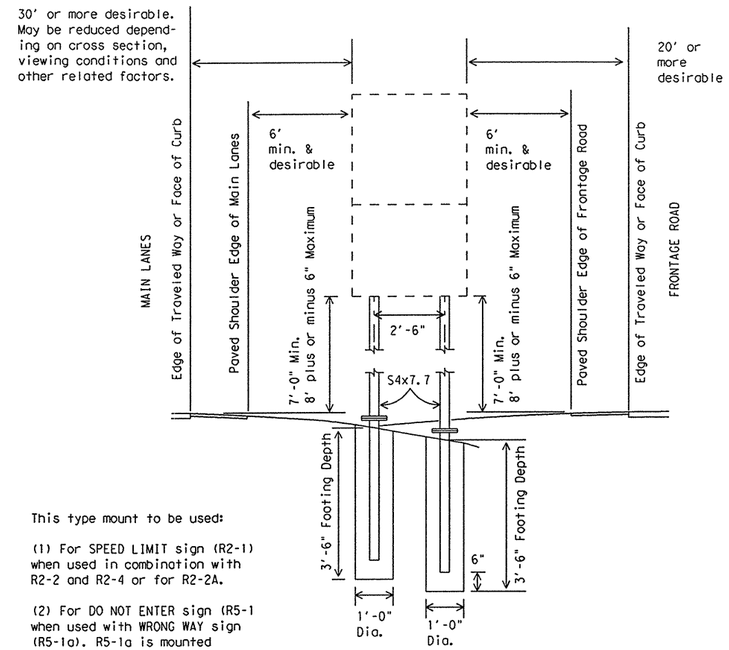

This type mount to be used:

(1) For SPEED LIMIT sign (R2-1) when used in combination with R2-2 and R2-4 or for R2-2A.

(2) For DO NOT ENTER sign (R5-1 when used with WRONG WAY sign (R5-1a). R5-1a is mounted above R5-1.

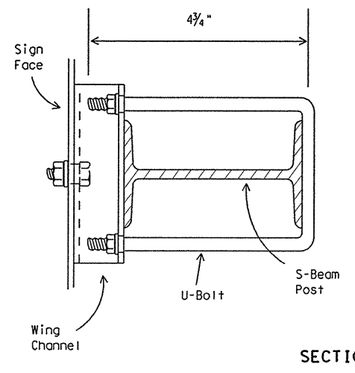

SECTION A-A

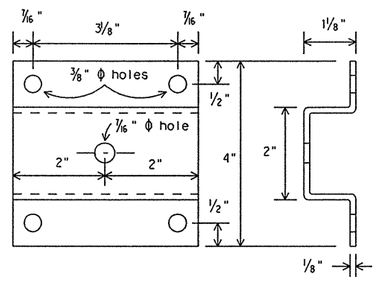

WING CHANNEL

Wing channel, 4" width x 1 1/8" depth x 1/8" thickness, shall be aluminum (ASTM B221 6061-T6 or B308 6061-T6), galvanized steel (ASTM A36) or stainless steel (ASTM A167 type 304, No. 2B finish).

DEPARTMENTAL MATERIAL SPECIFICATIONS
SIGN HARDWARE DMS-7120

GENERAL NOTES:

1. Design conforms with AASHTO Specifications for the design and construction of structural supports for highway signs.
2. Materials and fabrication shall conform to the requirements of the Department material specifications.
3. Structural steel shall be "Low-Alloy Steel" for non-bridge structures per Item 442, "Metal For Structures."
4. Parts shall be saw cut either before galvanizing and the galvanized cut cleaned of zinc build-up, or saw cut after galvanizing and the cut surface repaired per Item 445, "Galvanizing." (Cut surface will not be treated until plate is installed and all bolts fully tightened.)

STANDARD PLANS
Texas Department of Transportation
Traffic Operations Division

SIGN MOUNTING DETAILS, TYPE G SUPPORT

SMD(TY G)-08

© TxDOT August 1995	DN: TxDOT	CK: TxDOT	DW: TxDOT	CK: TxDOT	
REVISIONS	STATE DISTRICT	FEDERAL REGION	FEDERAL AID PROJECT		SHEET
1-97	AUSTIN	6			628
9-08	COUNTY		CONTROL-SECT-JOB		HIGHWAY
	WILLIAMSON		0683-06-027		SH 45 LOOP 1

DISCLAIMER
The use of this standard is governed by the "Texas Engineering Practice Act". No warranty of any kind is made by TxDOT for any purpose whatsoever. TxDOT assumes no responsibility for the conversion of this standard to other formats or for incorrect results or damages resulting from its use.

LEVELS 1 2 3 4 5 6 7 8
DATE:
ACC:
FILE:
DN:
CK:
DW:
CK:

DISCLAIMER
The use of this standard is governed by the "Texas Engineering Practice Act". No warranty of any kind is made by TxDOT for any purpose whatsoever. TxDOT assumes no responsibility for the conversion of this standard to other formats or for incorrect results or damages resulting from its use.

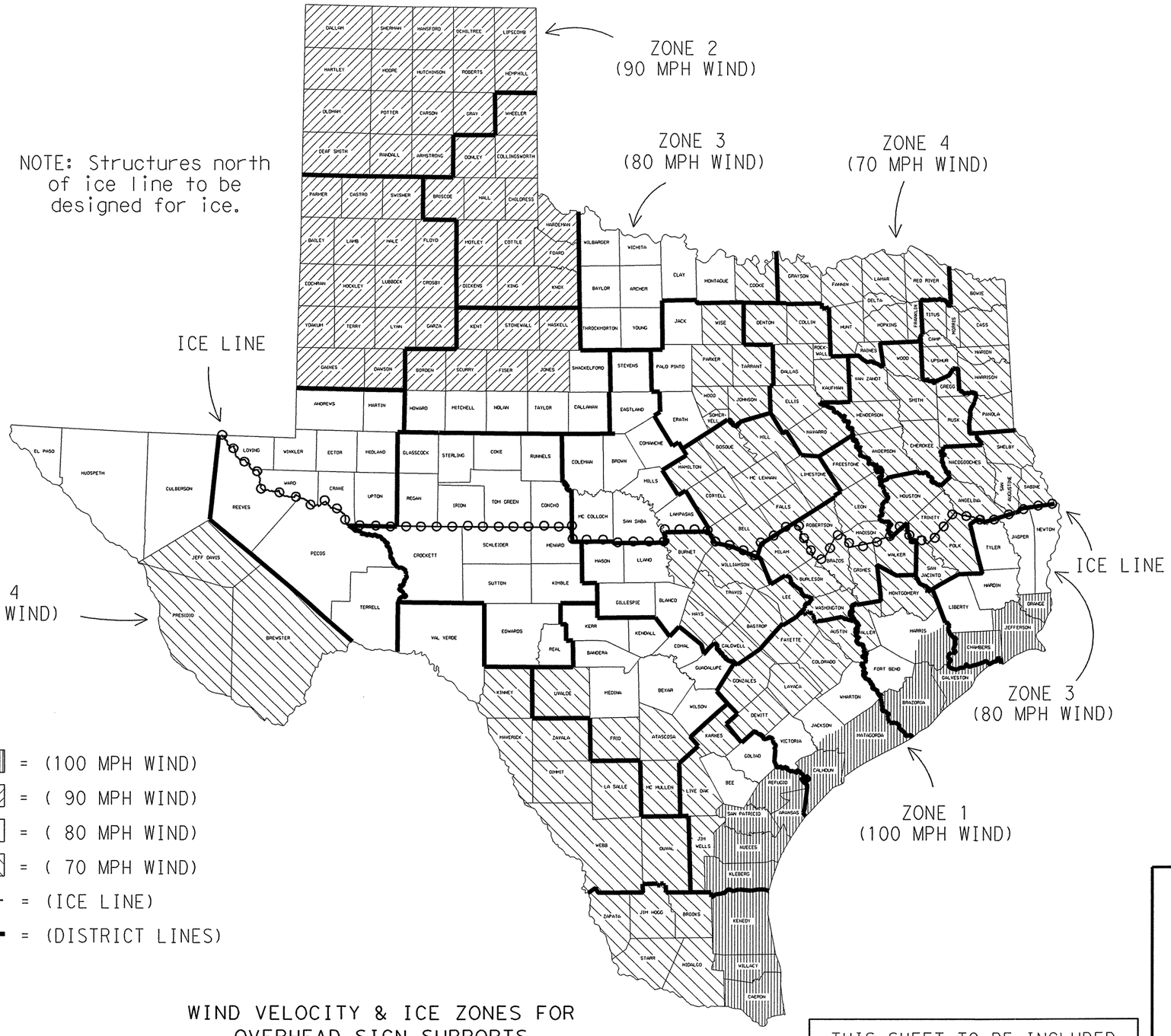

LEGEND

ZONE 1 - = (100 MPH WIND)

ZONE 2 - = (90 MPH WIND)

ZONE 3 - = (80 MPH WIND)

ZONE 4 - = (70 MPH WIND)

= (ICE LINE)

= (DISTRICT LINES)

FOR HARRIS CO. ONLY
Zone line is just North of US 90, around on the North, West and South sides of IH 610 and down the West side of SH 288.

FOR JACKSON CO. ONLY
Zone line is just North of SH 616.

WIND VELOCITY & ICE ZONES FOR OVERHEAD SIGN SUPPORTS

Based on 50 Year Mean Recurrence Interval of Fastest Mile Wind Velocity at 33 feet height.

THIS SHEET TO BE INCLUDED IN ALL P.S.&E.'s WITH OVERHEAD SIGN SUPPORTS

STANDARD PLANS
TEXAS DEPARTMENT OF TRANSPORTATION
Traffic Operations Division

WIND VELOCITY AND ICE ZONES

WV & IZ-96

©TxDOT April 1996	DN: -	CK: -	DW: DN	CK: MT	NEG NO.:
REVISIONS	DISTRICT	FEDERAL AID PROJECT			SHEET
	AUSTIN				629
	COUNTY		CONTROL-SECT-JOB		HIGHWAY
	WILLIAMSON		0683-06-027		SH 45, LOOP 1

LEVELS DISPLAYED 1 2 3 4 5 6 7 8 9 10 11 12 13 14 15 16 17 18 19 20 21 22 23 24 25 26 27 28 29 30 31 32 33 34 35 36 37 38 39 40 41 42 43 44 45 46 47 48 49 50 51 52 53 54 55 56 57 58 59 60 61 62 63

DATE:
ACC: d58hplc/usr/d580504
FILE:

DN: LR
CK: CW
DW: DN
CK: MT

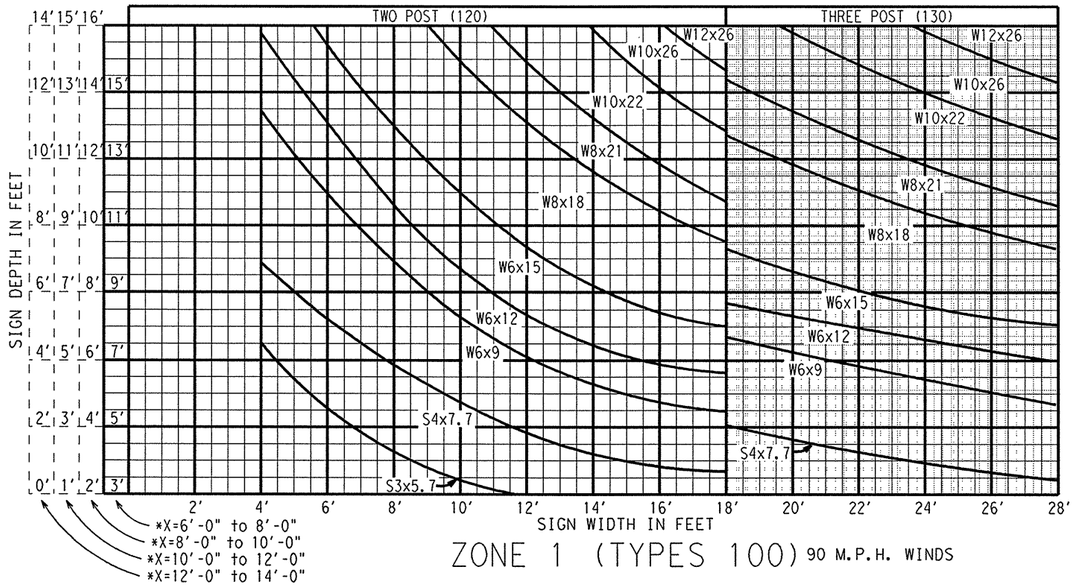

ZONE 1 (TYPES 100) 90 M.P.H. WINDS

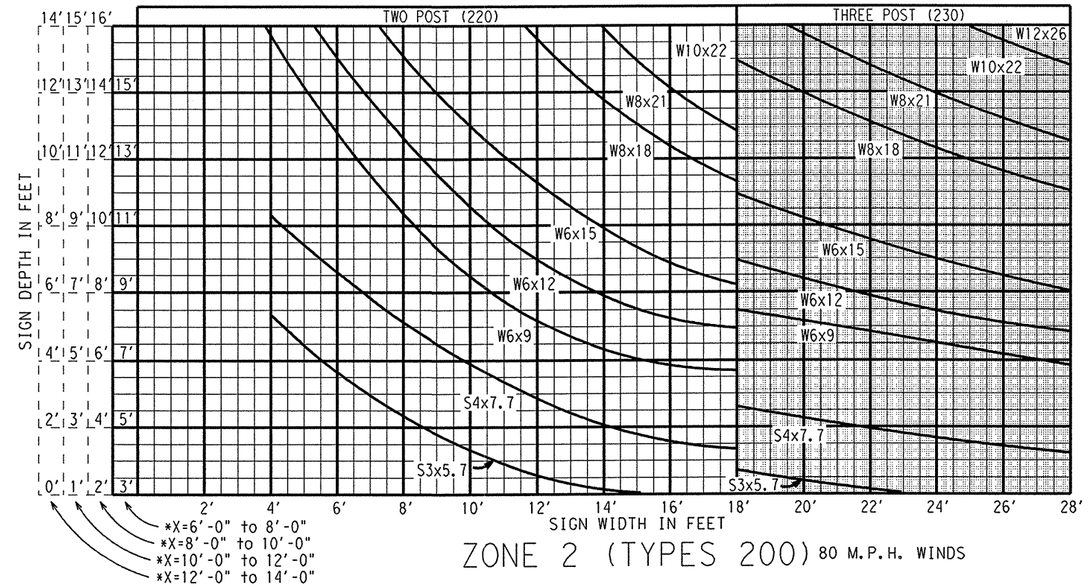

ZONE 2 (TYPES 200) 80 M.P.H. WINDS

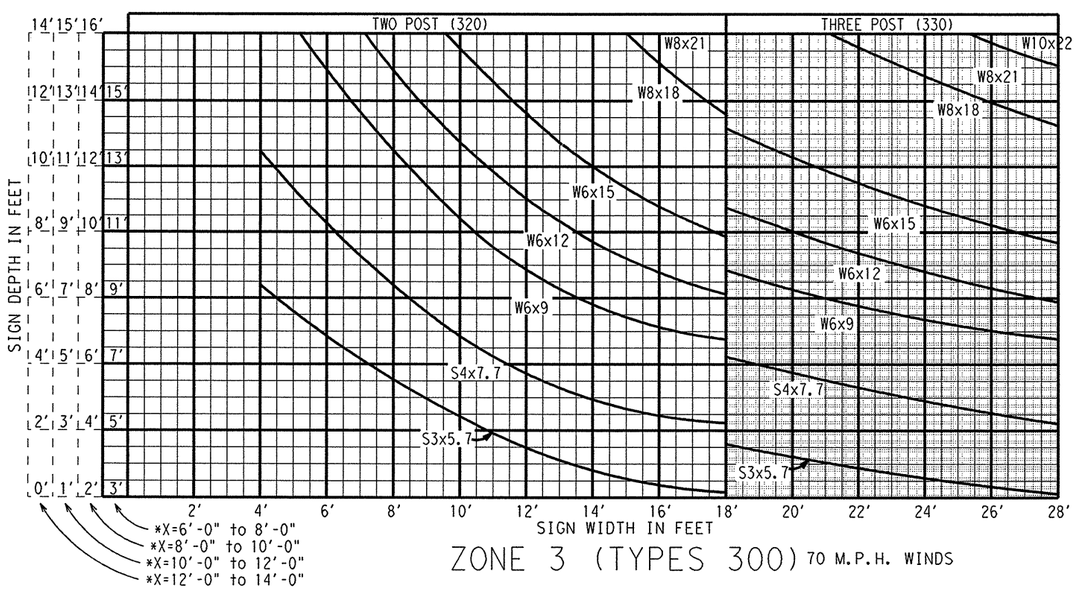

ZONE 3 (TYPES 300) 70 M.P.H. WINDS

* NOTE: "X" EQUALS THE AVERAGE HEIGHT FROM THE GROUND LINE TO THE BOTTOM EDGE OF THE SIGN.

SHADED AREA DENOTES 3 POST SUPPORTS

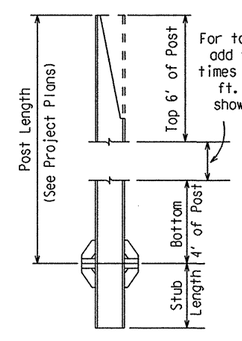

For total post wt. add this length times post wt. per ft. to weight shown in table

POST WEIGHT DATA

POST SIZE	WEIGHT OF ONE POST (#)	WEIGHT OF TWO POSTS (#)	WEIGHT OF THREE POSTS (#)
W6x9*	123.2	246.4	369.6
W6x12*	160.3	320.6	480.9
W6x15*	167.8	335.6	503.4
W8x18*	201.8	403.6	605.4
W8x21*	254.7	509.4	764.1
W10x22*	266.0	532.0	798.0
W10x26*	308.0	616.0	924.0
W12x26*	308.6	617.2	925.8
S3x5.7*	85.9	171.8	257.7
S4x7.7*	112.2	224.4	336.6

*LAST FIGURES=POST WT. PER FT.

Weight Data is the weight of items shown for one, two or three posts - (includes top 6' of post, bottom 4' of post, post foundation stub, related base connection plates and stiffeners, friction fuse plate and all high strength bolts, nuts and washers).

SIGN TYPE

SIGN TYPE 1 3 0

- Wind Design Zone
- Series No.
  - 0 Aluminum/Fiberglass
  - 1 Aluminum
  - 2 Fiberglass
- No. of Posts

Note: Footings for S3x5.7 and S4x7.7 post sizes shall be non-reinforced with Class A concrete, while footing for all other post sizes shall be reinforced with Class C concrete.

Texas Department of Transportation
Traffic Operations Division

LARGE ROADSIDE SIGN SUPPORTS POST SELECTION WORKSHEET

SMD(8W1)-08

©TxDOT July 1978

REVISIONS
1-82
5-01
9-08

DN: TXDOT	CK: TXDOT	DW: TXDOT	CK: TXDOT
CONT	SECT	JOB	HIGHWAY
0683	06	027	LP 1/SH 45
DIST		COUNTY	SHEET NO.
AUS		WILLIAMSON	630

DISCLAIMER: The use of this standard is governed by the "Texas Engineering Practice Act". No warranty of any kind is made by TxDOT for any purpose whatsoever. TxDOT assumes no responsibility for the conversion of this standard to other formats or for incorrect results or damages resulting from its use.

DATE:4/11/2011
FILE:r:\trans-design\o'connor\cadd\std\pmrk*signs\SMD8-08.DGN

DISCLAIMER: The use of this standard is governed by the "Texas Engineering Practice Act". No warranty of any kind is made by TxDOT for any purpose whatsoever. TxDOT assumes no responsibility for the conversion of this standard to other formats or for incorrect results or damages resulting from its use.

I

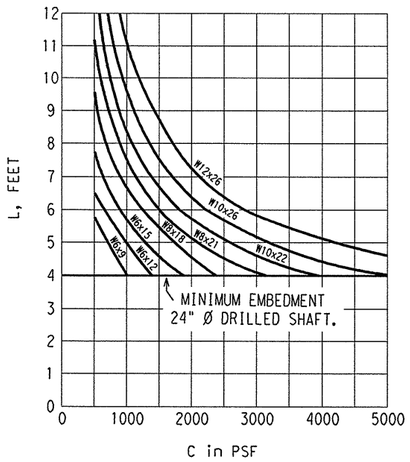

Ø = 0 Degrees

II

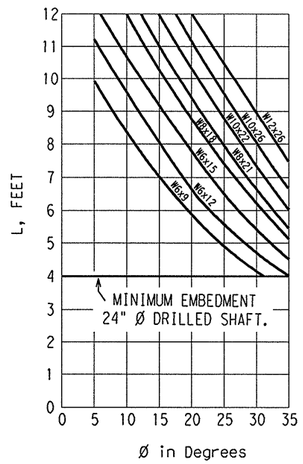

C = 0 PSF

III

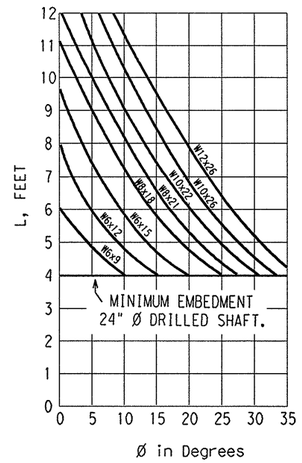

C = 500 PSF

IV

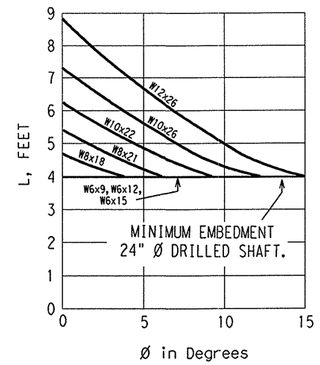

C = 2000 PSF

V

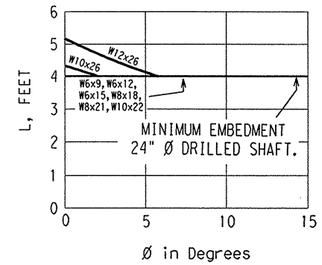

C = 4000 PSF

DRILLED CONCRETE FOOTING DEPTH CHART
(COHFRIC DESIGN)

NOTE: THESE CHARTS MAY BE USED AS AN ALTERNATE TO THE CHART BELOW, PROVIDED THAT SOIL COHESION AND INTERNAL FRICTION (COHFRIC) DATA ARE AVAILABLE.

LEGEND:

L = Required embedment of concrete drilled shaft, in feet
C = Cohesive shear strength of soil, in psf
Ø = Angle of internal friction of soil, in degrees

For values of C and Ø which are intermediate to those on the charts, embedments may be determined by straight - line interpolation.

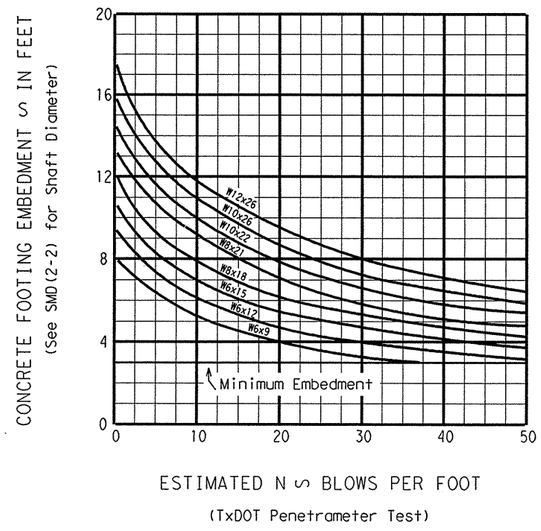

DRILLED CONCRETE FOOTING DEPTH CHART
(TxDOT PENETROMETER DESIGN)

NOTE: ESTIMATED N SHOULD BE BASED AT APPROXIMATELY THE UPPER ONE-THIRD POINT OF THE DRILLED CONCRETE FOOTING BELOW THE GROUND LINE

Note:
1. Curves shown on this sheet are applicable for reinforced concrete footings only.

Texas Department of Transportation
Traffic Operations Division

LARGE ROADSIDE SIGN SUPPORTS
FOUNDATION
WORKSHEET
SMD(8W2)-08

©TxDOT July 1972

REVISIONS
5-74
4-78
9-08

DN: TXDOT	CK: TXDOT	DW: TXDOT	CK: TXDOT
CONT	SECT	JOB	HIGHWAY
0683	06	027	LP 1/SH 45
DIST	COUNTY		SHEET NO.
AUS	WILLIAMSON		631

298

DATE:4/11/2011
FILE:r:\trans-design\o'connor\cadd\std\pmrk\signs\SMD8-08.DGN

100 M.P.H. WIND NO ICE

TRUSS DETAILS

← ¾" Dia. H.S. Bolts →

SPAN	160′			165′			170′			175′		
	END SECTIONS		CENTER SECTION	END SECTIONS		CENTER SECTION	END SECTIONS		CENTER SECTION	END SECTIONS		CENTER SECTION
W x D = WIDTH x DEPTH	6.5 x 6.5		6.5 x 6.5	6.5 x 6.5		6.5 x 6.5	6.5 x 6.5		6.5 x 6.5	7.0 x 7.0		7.0 x 7.0
CHORD -②, Unless Otherwise Shown	L 6 x 6 x 1/2	[21]	L 6 x 6 x 9/16 [22]	L 6 x 6 x 9/16	[23]	L 6 x 6 x 5/8 [24]	L 6 x 6 x 9/16	[24]	L 6 x 6 x 5/8 [25]	L 6 x 6 x 9/16	[24]	L 6 x 6 x 5/8 [25]
DEAD LOAD DIAGONAL - ③, Unless Otherwise Shown	L 3 x 3 x 1/4	[3]	L 3 x 2 1/2 x 1/4 [3]	L 3 x 3 x 1/4	[3]	L 3 x 2 1/2 x 1/4 [3]	L 3 x 3 x 1/4	[3]	L 3 x 2 1/2 x 1/4 [3]	L 3 x 3 x 1/4	[3]	L 3 x 2 1/2 x 1/4 [3]
WIND LOAD DIAGONAL -③	L 4 x 3 1/2 x 3/8	[5]	L 3 1/2 x 3 1/2 x 5/16 [4]	L 4 x 3 1/2 x 3/8	[5]	L 4 x 4 x 5/16 [4]	L 4 x 3 1/2 x 3/8	[5]	L 3 1/2 x 3 1/2 x 3/8 [5]	L 4 x 4 x 3/8	[5]	L 4 x 3 1/2 x 3/8 [5]
DEAD LOAD VERTICAL -③	L 3 x 2 1/2 x 1/4	[2]	L 3 x 2 1/2 x 1/4 [2]	L 3 x 3 x 1/4	[2]	L 3 x 2 1/2 x 1/4 [2]	L 3 x 3 x 1/4	[2]	L 3 x 2 1/2 x 1/4 [2]	L 3 1/2 x 3 x 1/4	[4]	L 3 x 3 x 1/4 [2]
WIND LOAD STRUT - ③	L 3 x 2 x 3/16	[2]	L 3 x 2 x 3/16 [2]	L 3 x 2 x 3/16	[2]	L 3 x 2 x 3/16 [2]	L 3 x 2 x 3/16	[2]	L 3 x 2 x 3/16 [2]	L 3 x 2 x 3/16	[2]	L 3 x 2 x 3/16 [2]
TOTAL DEFL. & TRUSS D.L.	D.L.=149 lb/ft	DEFL=3.93"	D.L.=152 lb/ft	D.L.=160 lb/ft	DEFL=4.02"	D.L.=165 lb/ft	D.L.=160 lb/ft	DEFL=4.51"	D.L.=166 lb/ft	D.L.=168 lb/ft	DEFL=4.54"	D.L.=173 lb/ft

TOWER DETAILS

COLUMN SIZE & UPLIFT (kips)

S = COLUMN SPACING	8.5′		8.5′		8.5′		9.0′	
TOWER HEIGHT								
20′	W 18 x 50	(115)	W 18 x 50	(119)	W 18 x 50	(122)	W 18 x 55	(119)
21′	W 18 x 50	(121)	W 18 x 55	(127)	W 18 x 55	(130)	W 18 x 55	(126)
22′	W 18 x 55	(129)	W 18 x 55	(133)	W 18 x 55	(137)	W 21 x 57	(133)
23′	W 18 x 55	(135)	W 21 x 57	(140)	W 21 x 57	(144)	W 21 x 62	(139)
24′	W 21 x 57	(142)	W 21 x 62	(147)	W 21 x 62	(150)	W 21 x 62	(146)
25′	W 21 x 62	(148)	W 21 x 62	(153)	W 21 x 62	(157)	W 21 x 62	(153)
26′	W 21 x 62	(155)	W 21 x 62	(160)	W 21 x 62	(164)	W 21 x 68	(159)
27′	W 21 x 62	(161)	W 21 x 68	(166)	W 21 x 68	(171)	W 21 x 68	(166)
28′	W 21 x 68	(168)	W 21 x 68	(173)	W 21 x 68	(178)	W 21 x 68	(173)
29′	W 21 x 68	(174)	W 21 x 68	(180)	W 24 x 68	(185)	W 24 x 68	(180)
30′	W 21 x 68	(181)	W 24 x 68	(187)	W 24 x 68	(192)	W 24 x 68	(186)
31′	W 24 x 68	(188)	W 24 x 68	(194)	W 24 x 68	(199)	W 24 x 68	(193)
32′	W 24 x 68	(194)	W 24 x 68	(200)	W 24 x 76	(206)	W 24 x 76	(198)
33′	W 24 x 68	(201)	W 24 x 76	(207)	W 24 x 76	(213)	W 24 x 76	(207)
34′	W 24 x 76	(207)	W 24 x 76	(214)	W 24 x 76	(220)	W 24 x 76	(214)
35′	W 24 x 76	(214)	W 24 x 76	(221)	W 24 x 76	(227)	W 24 x 84	(224)
36′	W 24 x 76	(221)	W 24 x 76	(228)	W 24 x 84	(237)	W 24 x 84	(231)
37′	W 24 x 76	(228)	W 24 x 84	(238)	W 24 x 84	(245)	W 24 x 84	(238)
38′	W 24 x 84	(238)	W 24 x 84	(245)	W 24 x 84	(252)	W 24 x 94	(245)
39′	W 24 x 84	(245)	W 24 x 84	(253)	W 24 x 84	(260)	W 24 x 94	(252)
40′	W 24 x 84	(252)	W 24 x 84	(260)	W 24 x 94	(267)	W 24 x 94	(259)
42′	W 24 x 94	(267)	W 24 x 94	(276)	W 24 x 104	(285)	W 24 x 104	(278)
45′	W 24 x 104	(288)	W 24 x 104	(299)	W 24 x 104	(308)	W 24 x 104	(300)

Tower Height = $\frac{HL + HR}{2}$

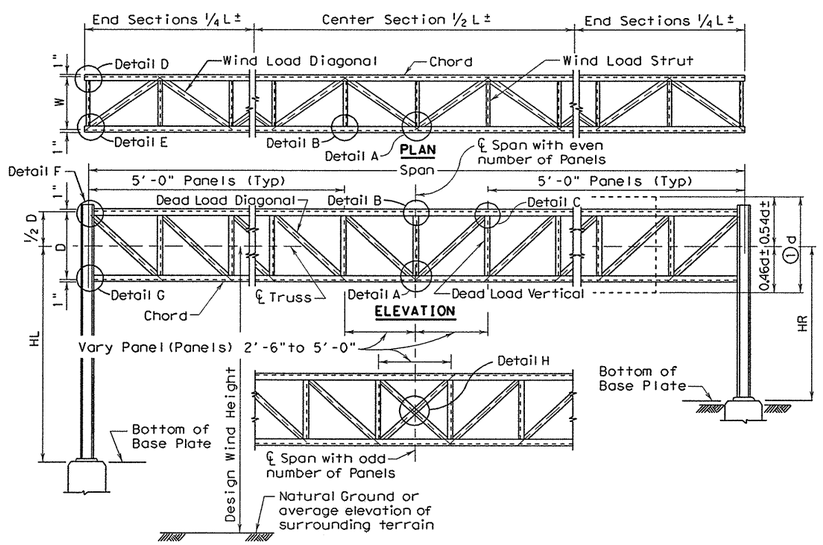

① d = Sign Depth
Where signs of different depths are used, the bottom edges of all signs may be placed in line. Where this is done, all signs should be so positioned that the bottom edges are approximately 0.46 of the depth of the deepest sign below the ℄ of the truss.

② "Low-Alloy Steel" for non-bridge structures per Item 442, "Metal For Structures".

③ "Carbon Steel" for non-bridge structures per Item 442, "Metal For Structures".

DISCLAIMER:
The use of this standard is governed by the "Texas Engineering Practice Act". No warranty of any kind is made by TxDOT for any purpose whatsoever. TxDOT assumes no responsibility for the conversion of this standard to other formats or for incorrect results or damages resulting from its use.

PATH:

LEVELS DISC.

SHEET 1 OF 2

Texas Department of Transportation
Traffic Operations Division

HIGH LEVEL OVERHEAD SIGN BRIDGE DETAILS

HOSB-Z1L

FILE: hosb-z1l.dgn	DN: TxDOT	CK: TxDOT	DW: TxDOT	CK: TxDOT
© TxDOT November 2007	DISTRICT	FEDERAL AID PROJECT		SHEET
REVISIONS 8/08 removed trash artifacts; angle sizes (select spans); misc text	AUSTIN			632
	COUNTY		CONTROL-SECT-JOB	HIGHWAY
	WILLIAMSON		0683-06-027	IH 35 LOOP 1

34A

100 M.P.H. WIND NO ICE

TRUSS DETAILS

← 3/4" Dia. H.S. Bolts →

SPAN	180'		185'		190'		195'	
	END SECTIONS	CENTER SECTION	END SECTIONS	CENTER SECTION	END SECTIONS	CENTER SECTION	END SECTIONS	CENTER SECTION
W x D = WIDTH x DEPTH	7.0 x 7.0	7.0 x 7.0	7.0 x 7.0	7.0 x 7.0	7.5 x 7.5	7.5 x 7.5	7.5 x 7.5	7.5 x 7.5
CHORD -②, Unless Otherwise Shown	L 6 x 6 x 5/8 [26]	L 6 x 6 x 3/4 [29]	L 6 x 6 x 5/8 [28]	L 6 x 6 x 3/4 [29]	L 6 x 6 x 5/8 [28]	L 6 x 6 x 3/4 [29]	L 6 x 6 x 3/4 [30]	L 6 x 6 x 7/8 [33]
DEAD LOAD DIAGONAL - ③, Unless Otherwise Shown	L 3 x 3 x 1/4 ② [3]	L 3 x 2 1/2 x 1/4 [3]	L 3 x 3 x 1/4 ② [3]	L 3 x 3 x 1/4 [3]	L 3 x 3 x 1/4 ② [4]	L 3 x 3 x 1/4 [3]	L 3 x 3 x 1/4 ② [4]	L 3 x 3 x 1/4 [3]
WIND LOAD DIAGONAL -③	L 4 x 4 x 3/8 [5]	L 4 x 3 1/2 x 3/8 [5]	L 4 x 4 x 3/8 [5]	L 4 x 3 1/2 x 3/8 [5]	L 4 x 4 x 3/8 [5]	L 4 x 3 1/2 x 3/8 [5]	L 4 x 4 x 3/8 [5]	L 4 x 4 x 3/8 [5]
DEAD LOAD VERTICAL -③	L 3 1/2 x 3 x 1/4 [3]	L 3 x 3 x 1/4 [3]	L 3 1/2 x 3 x 1/4 [3]	L 3 x 3 x 1/4 [3]	L 3 1/2 x 3 1/2 x 1/4 [3]	L 3 1/2 x 3 x 1/4 [3]	L 3 1/2 x 3 x 5/16 [3]	L 3 1/2 x 3 x 1/4 [3]
WIND LOAD STRUT - ③	L 3 x 2 x 3/16 [2]	L 3 x 2 x 3/16 [2]	L 3 x 2 x 3/16 [2]	L 3 x 2 x 3/16 [2]	L 3 x 2 x 3/16 [2]	L 3 x 2 x 3/16 [2]	L 3 x 2 x 3/16 [2]	L 3 x 2 x 3/16 [2]
TOTAL DEFL. & TRUSS D.L.	D.L.=178 lb/ft DEFL=4.72"	D.L.=193 lb/ft	D.L.=178 lb/ft DEFL=5.23"	D.L.=193 lb/ft	D.L.=184 lb/ft DEFL=5.22"	D.L.=200 lb/ft	D.L.=206 lb/ft DEFL=5.44"	D.L.=220 lb/ft

TOWER DETAILS

S = COLUMN SPACING	9.0'		9.0'		9.5'		9.5'	
TOWER HEIGHT (Tower Height = (HL + HR)/2)	COLUMN SIZE & UPLIFT (kips)							
20'	W 18 x 55	(123)	W 18 x 55	(127)	W 21 x 57	(124)	W 21 x 57	(128)
21'	W 18 x 55	(130)	W 21 x 57	(134)	W 21 x 62	(131)	W 21 x 62	(135)
22'	W 21 x 57	(137)	W 21 x 62	(142)	W 21 x 62	(138)	W 21 x 62	(142)
23'	W 21 x 62	(143)	W 21 x 62	(148)	W 21 x 62	(144)	W 21 x 62	(149)
24'	W 21 x 62	(150)	W 21 x 62	(155)	W 21 x 68	(151)	W 21 x 68	(156)
25'	W 21 x 62	(157)	W 21 x 68	(162)	W 21 x 68	(158)	W 21 x 68	(163)
26'	W 21 x 68	(164)	W 21 x 68	(170)	W 21 x 68	(165)	W 24 x 68	(170)
27'	W 21 x 68	(171)	W 24 x 68	(177)	W 24 x 68	(172)	W 24 x 68	(177)
28'	W 24 x 68	(178)	W 24 x 68	(184)	W 24 x 68	(179)	W 24 x 68	(184)
29'	W 24 x 68	(185)	W 24 x 68	(191)	W 24 x 68	(186)	W 24 x 76	(191)
30'	W 24 x 68	(192)	W 24 x 76	(198)	W 24 x 76	(193)	W 24 x 76	(198)
31'	W 24 x 76	(199)	W 24 x 76	(205)	W 24 x 76	(200)	W 24 x 76	(205)
32'	W 24 x 76	(206)	W 24 x 76	(212)	W 24 x 76	(208)	W 24 x 76	(213)
33'	W 24 x 76	(213)	W 24 x 76	(220)	W 24 x 84	(216)	W 24 x 84	(222)
34'	W 24 x 76	(220)	W 24 x 84	(230)	W 24 x 84	(224)	W 24 x 84	(230)
35'	W 24 x 84	(230)	W 24 x 84	(237)	W 24 x 84	(231)	W 24 x 84	(237)
36'	W 24 x 84	(237)	W 24 x 84	(245)	W 24 x 94	(238)	W 24 x 94	(245)
37'	W 24 x 84	(245)	W 24 x 94	(252)	W 24 x 94	(246)	W 24 x 94	(252)
38'	W 24 x 94	(252)	W 24 x 94	(260)	W 24 x 94	(253)	W 24 x 94	(260)
39'	W 24 x 94	(259)	W 24 x 94	(267)	W 24 x 104	(260)	W 24 x 104	(267)
40'	W 24 x 94	(266)	W 24 x 104	(275)	W 24 x 104	(267)	W 24 x 104	(274)
42'	W 24 x 104	(283)	W 24 x 104	(291)	W 24 x 104	(284)	W 24 x 104	(289)
45'	W 24 x 117	(306)	W 24 x 117	(315)	W 24 x 117	(307)	W 24 x 117	(312)

100 M.P.H. WIND NO ICE

TRUSS DETAILS

3/4" Dia. H.S. Bolts

SPAN	200'	
	END SECTIONS	CENTER SECTION
W x D = WIDTH x DEPTH	7.5 x 7.5	7.5 x 7.5
CHORD -②, Unless Otherwise Shown	L 6 x 6 x 3/4 [32]	L 6 x 6 x 7/8 [34]
DEAD LOAD DIAGONAL - ③, Unless Otherwise Shown	L 3 x 3 x 1/4 ② [4]	L 3 x 3 x 1/4 [4]
WIND LOAD DIAGONAL -③	L 4 x 4 x 7/16 [6]	L 4 x 4 x 3/8 [5]
DEAD LOAD VERTICAL -③	L 3 1/2 x 3 x 5/16 [3]	L 3 1/2 x 3 1/2 x 1/4 [3]
WIND LOAD STRUT - ③	L 3 x 2 x 3/16 [2]	L 3 x 2 x 3/16 [2]
TOTAL DEFL. & TRUSS D.L.	D.L.=211 lb/ft DEFL=6.06"	D.L.=223 lb/ft

TOWER DETAILS

S = COLUMN SPACING	9.5'	
TOWER HEIGHT (Tower Height = (HL + HR)/2)	COLUMN SIZE & UPLIFT (kips)	
20'	W 21 x 62	(131)
21'	W 21 x 62	(138)
22'	W 21 x 62	(145)
23'	W 21 x 68	(153)
24'	W 21 x 68	(160)
25'	W 21 x 68	(167)
26'	W 24 x 68	(174)
27'	W 24 x 68	(182)
28'	W 24 x 68	(189)
29'	W 24 x 76	(196)
30'	W 24 x 76	(204)
31'	W 24 x 76	(211)
32'	W 24 x 84	(221)
33'	W 24 x 84	(228)
34'	W 24 x 84	(236)
35'	W 24 x 94	(244)
36'	W 24 x 94	(251)
37'	W 24 x 94	(258)
38'	W 24 x 94	(266)
39'	W 24 x 104	(274)
40'	W 24 x 104	(282)
42'	W 24 x 104	(297)
45'	W 24 x 117	(320)

NOTE: Details on these sheets are for Design Wind Heights between 30 feet and 50 feet.

GENERAL NOTES

Design conforms to AASHTO 1994 Standard Specifications for Structural Supports for Highway Signs, Luminaires, and Traffic Signals and Interim Revisions thereto.

For overhead sign bridges with different tower heights, average the height of the two towers and use the tabulated height nearest the calculated average. For average heights falling midway between the two tabulated heights use the larger height.

For truss lengths falling between those shown in the tables use the sizes called for in the next longer span.

Overhead sign bridges are designed for the equivalent area of a 10 foot deep sign panel over 75 percent of the span length, located as necessary to produce maximum stress. Design includes 3 pounds per square foot for sign panel, 20 pounds per linear foot for lights, and 50 pounds per linear foot for walkway, all placed as specified for the design sign panel.

Refer to "Overhead Sign Bridge Truss Details" for details called out in plan and elevation views.

The number of High Strength Bolts required in truss connection or splice are indicated in brackets, e.g. [3], after the member size.

KEY TO TRUSS AND TOWER DETAILS

Truss members are all angles.
Truss columns are all wide flange shapes.

W 18 x 55 (115) ← 115 kips Uplift at base plate
- 55 Pounds per foot.
- 18" Nominal size
- Wide Flange

DEFL = 0.12" = inches Deflection due to dead load of truss, walkway, signs and lights.
DL = 42 lb/ft = pounds per foot dead load of truss members only; does not include walkway, signs, and lights.

SHEET 2 OF 2

Texas Department of Transportation
Traffic Operations Division

HIGH LEVEL OVERHEAD SIGN BRIDGE DETAILS

HOSB-Z1L

FILE: hosb-z1l.dgn	DN: TxDOT	CK: TxDOT	DW: TxDOT	CK: TxDOT
© TxDOT November 2007	DISTRICT	FEDERAL AID PROJECT		SHEET
REVISIONS 8/08 angle sizes (select spans); applicability note; noted design specifications	AUSTIN			633
	COUNTY		CONTROL-SECT-JOB	HIGHWAY
	WILLIAMSON		0683-06-027	IH 35 (LOOP 1)

34B

DISCLAIMER:
The use of this standard is governed by the "Texas Engineering Practice Act". No warranty of any kind is made by TxDOT for any purpose whatsoever. TxDOT assumes no responsibility for the conversion of this standard to other formats or for incorrect results or damages resulting from its use.

PATH:

LEVELS DIS.

ZONE 4 NO ICE 70 M.P.H. WIND

TRUSS DETAILS

5/8" Dia. H.S. Bolts — Spans 40' Thru 95'

SPAN	40'	45'	50'	55'	60'	65'	70'	75'
W x D = WIDTH x DEPTH	4.0 x 4.0	4.0 x 4.0	4.0 x 4.0	4.0 x 4.0	4.0 x 4.0	4.0 x 4.0	4.0 x 4.0	4.0 x 4.0
CHORD -②, Unless Otherwise Shown	L 3 x 3 x 3/16 ③ [4]	L 3 x 3 x 3/16 ③ [4]	L 3 x 3 x 3/16 ③ [4]	L 3 x 3 x 1/4 ③ [4]	L 3 x 3 x 1/4 [6]	L 3 x 3 x 1/4 [6]	L 3 x 3 x 5/16 [6]	L 3 x 3 x 5/16 [8]
DEAD LOAD DIAGONAL -③	L 2 x 2 x 3/16 [2]	L 2 x 2 x 3/16 [2]	L 2 x 2 x 3/16 [2]	L 2 x 2 x 3/16 [2]	L 2 x 2 x 3/16 [2]	L 2 x 2 x 3/16 [2]	L 2 x 2 x 3/16 [2]	L 2 x 2 x 3/16 [2]
WIND LOAD DIAGONAL -③	L 2 1/2 x 2 1/2 x 3/16 [2]	L 2 1/2 x 2 1/2 x 3/16 [2]	L 2 1/2 x 2 1/2 x 3/16 [2]	L 2 1/2 x 2 1/2 x 3/16 [2]	L 2 1/2 x 2 1/2 x 3/16 [2]	L 3 x 3 x 3/16 [2]	L 3 x 3 x 3/16 [2]	L 3 x 3 x 3/16 [2]
DEAD LOAD VERTICAL -③	L 2 x 2 x 3/16 [2]	L 2 x 2 x 3/16 [2]	L 2 x 2 x 3/16 [2]	L 2 x 2 x 3/16 [2]	L 2 x 2 x 3/16 [2]	L 2 x 2 x 3/16 [2]	L 2 x 2 x 3/16 [2]	L 2 x 2 x 3/16 [2]
WIND LOAD STRUT - ③	L 2 x 2 x 3/16 [1]	L 2 x 2 x 3/16 [1]	L 2 x 2 x 3/16 [1]	L 2 x 2 x 3/16 [1]	L 2 x 2 x 3/16 [1]	L 2 x 2 x 3/16 [1]	L 2 x 2 x 3/16 [1]	L 2 x 2 x 3/16 [1]
TOTAL DEFL. & TRUSS D.L.	DEFL=0.14" L=37 lb/ft	DEFL=0.25" L=38 lb/ft	DEFL=0.31" L=38 lb/ft	DEFL=0.36" L=43 lb/ft	DEFL=0.49" L=43 lb/ft	DEFL=0.67" L=45 lb/ft	DEFL=0.76" L=50 lb/ft	DEFL=0.99" L=50 lb/ft

TOWER DETAILS

S = COLUMN SPACING	6.0'	6.0'	6.0'	6.0'	6.0'	6.0'	6.5'	6.5'
TOWER HEIGHT (COLUMN SIZE & UPLIFT (kips))								
15'	W 10 x 15 (13.8)	W 10 x 15 (15.4)	W 10 x 15 (17.0)	W 10 x 15 (18.5)	W 10 x 15 (20.0)	W 10 x 15 (21.6)	W 10 x 15 (21.1)	W 10 x 17 (22.6)
16'	W 10 x 15 (14.8)	W 10 x 15 (16.5)	W 10 x 15 (18.2)	W 10 x 15 (19.8)	W 10 x 15 (21.5)	W 10 x 15 (23.2)	W 10 x 15 (22.6)	W 10 x 17 (24.2)
17'	W 10 x 15 (15.8)	W 10 x 15 (17.6)	W 10 x 15 (19.4)	W 10 x 15 (21.1)	W 10 x 15 (23.0)	W 10 x 15 (24.8)	W 10 x 17 (24.1)	W 10 x 17 (25.8)
18'	W 10 x 15 (16.8)	W 10 x 15 (18.7)	W 10 x 15 (20.6)	W 10 x 15 (22.5)	W 10 x 15 (24.4)	W 10 x 17 (26.3)	W 10 x 17 (25.6)	W 10 x 17 (27.4)
19'	W 10 x 15 (17.8)	W 10 x 15 (19.8)	W 10 x 15 (21.8)	W 10 x 15 (23.8)	W 10 x 15 (25.8)	W 10 x 17 (27.8)	W 10 x 22 (27.1)	W 10 x 22 (29.0)
20'	W 10 x 15 (18.8)	W 10 x 15 (20.9)	W 10 x 15 (23.1)	W 10 x 17 (25.1)	W 10 x 17 (27.1)	W 10 x 17 (29.3)	W 10 x 22 (28.6)	W 10 x 22 (30.6)
21'	W 10 x 15 (19.8)	W 10 x 15 (22.1)	W 10 x 15 (24.3)	W 10 x 17 (26.5)	W 10 x 17 (28.6)	W 10 x 22 (30.8)	W 10 x 22 (30.2)	W 10 x 22 (32.3)
22'	W 10 x 15 (20.9)	W 10 x 15 (23.2)	W 10 x 17 (25.6)	W 10 x 17 (27.8)	W 10 x 17 (30.0)	W 10 x 22 (32.4)	W 10 x 22 (31.7)	W 10 x 22 (33.9)
23'	W 10 x 15 (21.9)	W 10 x 15 (24.4)	W 10 x 17 (26.8)	W 10 x 22 (29.2)	W 10 x 22 (31.5)	W 10 x 22 (33.9)	W 10 x 22 (33.3)	W 10 x 22 (35.5)
24'	W 10 x 17 (23.0)	W 10 x 17 (25.5)	W 10 x 22 (28.1)	W 10 x 22 (30.6)	W 10 x 22 (33.0)	W 10 x 22 (35.5)	W 10 x 22 (34.8)	W 10 x 22 (37.2)
25'	W 10 x 17 (24.0)	W 10 x 17 (26.7)	W 10 x 22 (29.4)	W 10 x 22 (32.0)	W 10 x 22 (34.5)	W 10 x 22 (37.1)	W 10 x 26 (36.4)	W 10 x 26 (38.9)
26'	W 10 x 17 (25.1)	W 10 x 22 (27.9)	W 10 x 22 (30.6)	W 10 x 22 (33.3)	W 10 x 22 (36.0)	W 10 x 22 (38.7)	W 10 x 26 (37.9)	W 10 x 26 (40.5)
27'	W 10 x 22 (26.2)	W 10 x 22 (29.1)	W 10 x 22 (31.9)	W 10 x 22 (34.7)	W 10 x 26 (37.5)	W 10 x 26 (40.3)	W 10 x 26 (39.5)	W 12 x 26 (42.6)
28'	W 10 x 22 (27.3)	W 10 x 22 (30.3)	W 10 x 22 (33.2)	W 10 x 22 (36.2)	W 10 x 26 (39.0)	W 10 x 26 (41.9)	W 10 x 26 (41.1)	W 12 x 26 (44.3)
29'	W 10 x 22 (28.4)	W 10 x 22 (31.5)	W 10 x 22 (34.5)	W 10 x 26 (37.6)	W 10 x 26 (40.5)	W 12 x 26 (43.1)	W 12 x 26 (43.1)	W 12 x 26 (46.0)
30'	W 10 x 22 (29.5)	W 10 x 22 (36.7)	W 10 x 26 (35.9)	W 10 x 26 (39.0)	W 10 x 26 (42.0)	W 12 x 26 (44.7)	W 12 x 26 (44.7)	W 12 x 26 (47.7)

Tower Height = (HL + HR)/2

ZONE 4 NO ICE 70 M.P.H. WIND

TRUSS DETAILS

5/8" Dia. H.S. Bolts — Spans 40' Thru 95'

SPAN	80'	85'	90'	95'
W x D = WIDTH x DEPTH	4.0 x 4.0	4.0 x 4.0	4.0 x 4.0	4.0 x 4.0
CHORD -②, Unless Otherwise Shown	L 3 x 3 x 3/8 [9]	L 3 x 3 x 7/16 [10]	L 3 1/2 x 3 1/2 x 3/8 [11]	L 3 1/2 x 3 1/2 x 3/8 [11]
DEAD LOAD DIAGONAL -③	L 2 x 2 x 3/16 [2]	L 2 x 2 x 3/16 [2]	L 2 x 2 x 3/16 [2]	L 2 1/2 x 2 1/2 x 3/16 [2]
WIND LOAD DIAGONAL -③	L 3 x 3 x 3/16 [2]	L 3 x 3 x 3/16 [2]	L 3 x 3 x 3/16 [3]	L 3 x 2 1/2 x 1/4 [3]
DEAD LOAD VERTICAL -③	L 2 x 2 x 3/16 [2]	L 2 x 2 x 3/16 [2]	L 2 x 2 x 3/16 [2]	L 2 x 2 x 3/16 [2]
WIND LOAD STRUT - ③	L 2 x 2 x 3/16 [1]	L 2 x 2 x 3/16 [1]	L 2 x 2 x 3/16 [1]	L 2 x 2 x 3/16 [1]
TOTAL DEFL. & TRUSS D.L.	DEFL=1.12" L=55 lb/ft	DEFL=1.29" L=60 lb/ft	DEFL=1.58" L=61 lb/ft	DEFL=1.94" L=64 lb/ft

TOWER DETAILS

S = COLUMN SPACING	6.5'	6.5'	6.5'	6.5'
TOWER HEIGHT (COLUMN SIZE & UPLIFT (kips))				
15'	W 10 x 17 (23.4)	W 10 x 17 (24.7)	W 10 x 17 (26.2)	W 10 x 22 (27.6)
16'	W 10 x 17 (25.0)	W 10 x 17 (26.5)	W 10 x 22 (28.0)	W 10 x 22 (29.5)
17'	W 10 x 17 (26.7)	W 10 x 22 (28.2)	W 10 x 22 (29.9)	W 10 x 22 (31.4)
18'	W 10 x 17 (28.3)	W 10 x 22 (30.0)	W 10 x 22 (31.7)	W 10 x 22 (33.4)
19'	W 10 x 22 (30.0)	W 10 x 22 (31.8)	W 10 x 22 (33.6)	W 10 x 22 (35.4)
20'	W 10 x 22 (31.7)	W 10 x 22 (33.5)	W 10 x 22 (35.5)	W 10 x 22 (37.3)
21'	W 10 x 22 (33.4)	W 10 x 22 (35.3)	W 10 x 26 (37.3)	W 10 x 26 (39.3)
22'	W 10 x 22 (35.1)	W 10 x 22 (37.1)	W 10 x 26 (39.2)	W 10 x 26 (41.3)
23'	W 10 x 26 (36.8)	W 10 x 26 (38.9)	W 10 x 26 (41.1)	W 12 x 26 (43.6)
24'	W 10 x 26 (38.5)	W 10 x 26 (40.7)	W 10 x 26 (43.0)	W 12 x 26 (45.6)
25'	W 10 x 26 (40.2)	W 12 x 26 (42.9)	W 12 x 26 (45.3)	W 12 x 26 (47.6)
26'	W 10 x 26 (41.9)	W 12 x 26 (44.7)	W 12 x 26 (47.2)	W 12 x 26 (49.7)
27'	W 12 x 26 (44.0)	W 12 x 26 (46.5)	W 12 x 26 (49.2)	W 12 x 26 (51.7)
28'	W 12 x 26 (45.8)	W 12 x 26 (48.4)	W 12 x 26 (51.1)	W 12 x 26 (53.8)
29'	W 12 x 26 (47.6)	W 12 x 26 (50.3)	W 12 x 26 (53.1)	W 14 x 30 (55.9)
30'	W 12 x 26 (49.3)	W 12 x 26 (52.2)	W 14 x 30 (55.1)	W 14 x 30 (58.0)

Tower Height = (HL + HR)/2

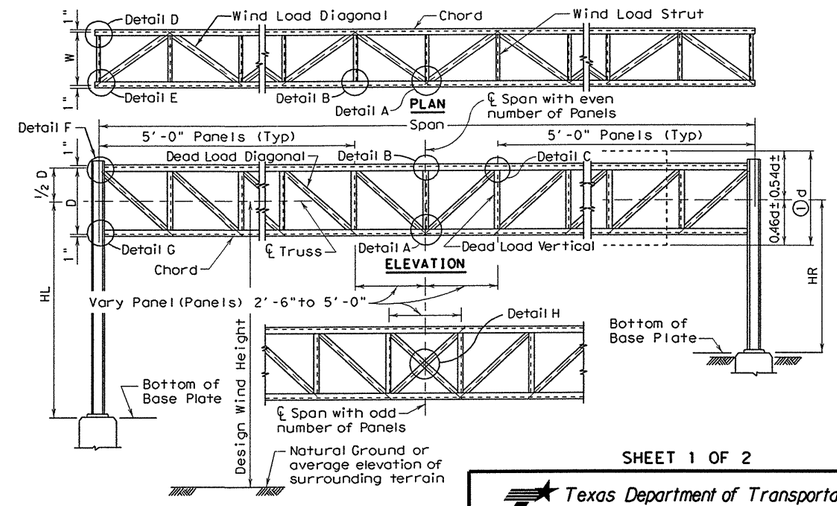

① d = Sign Depth
Where signs of different depths are used, the bottom edges of all signs may be placed in line. Where this is done, all signs should be so positioned that the bottom edges are approximately 0.46 of the depth of the deepest sign below the ℄ of the truss.

② "Low-Alloy Steel" for non-bridge structures per Item 442, "Metal For Structures".

③ "Carbon Steel" for non-bridge structures per Item 442, "Metal For Structures".

SHEET 1 OF 2

Texas Department of Transportation
Traffic Operations Division

OVERHEAD SIGN BRIDGE DETAILS

OSB-Z4

FILE: osb-z4.dgn	DN: TxDOT	CK: TxDOT	DW: TxDOT	CK: TxDOT
© TxDOT November 2007	DISTRICT	FEDERAL AID PROJECT		SHEET
REVISIONS 8/08 = of HS bolts	AUSTIN			634
	COUNTY		CONTROL-SECT-JOB	HIGHWAY
	WILLIAMSON		0683-06-027	SH 45, LOOP 1

41A

DISCLAIMER:
The use of this standard is governed by the "Texas Engineering Practice Act". No warranty of any kind is made by TxDOT for any purpose whatsoever. TxDOT assumes no responsibility for the conversion of this standard to other formats or for incorrect results or damages resulting from its use.

PATH:
LEVELS DIS.

ZONE 4 NO ICE 70 M.P.H. WIND

TRUSS DETAILS

(3/4" Dia. H.S. Bolts — Spans 96' Thru 155')

SPAN	100'	105'	110'	115'	120'	125'	130'	135'
W x D = WIDTH x DEPTH	4.5 x 4.5	4.5 x 4.5	4.5 x 4.5	4.5 x 4.5	5.0 x 5.0	5.0 x 5.0	5.0 x 5.0	5.0 x 5.0
CHORD -②, Unless Otherwise Shown	L 3 1/2 x 3 1/2 x 3/8 [7]	L 3 1/2 x 3 1/2 x 7/16 [9]	L 4 x 4 x 3/8 [9]	L 4 x 4 x 3/8 [10]	L 4 x 4 x 3/8 [10]	L 4 x 4 x 7/16 [11]	L 4 x 4 x 1/2 [12]	L 4 x 4 x 1/2 [13]
DEAD LOAD DIAGONAL -③	L 3 x 2 x 3/16 [2]	L 3 x 2 x 3/16 [2]	L 3 x 2 x 3/16 [2]	L 3 x 2 1/2 x 3/16 [2]	L 3 x 2 1/2 x 3/16 [2]	L 3 x 2 1/2 x 3/16 [2]	L 3 x 2 1/2 x 3/16 [2]	L 3 x 3 x 3/16 [2]
WIND LOAD DIAGONAL -③	L 3 x 2 1/2 x 1/4 [2]	L 3 x 2 1/2 x 1/4 [2]	L 3 x 2 1/2 x 1/4 [2]	L 3 x 3 x 1/4 [2]	L 3 x 3 x 1/4 [2]	L 3 x 3 x 1/4 [2]	L 3 x 3 x 1/4 [2]	L 3 x 3 x 1/4 [3]
DEAD LOAD VERTICAL -③	L 3 x 2 x 3/16 [2]	L 3 x 2 x 3/16 [2]	L 3 x 2 x 3/16 [2]	L 3 x 2 x 3/16 [2]	L 3 x 2 x 3/16 [2]	L 3 x 2 x 3/16 [2]	L 3 x 2 1/2 x 3/16 [2]	L 3 x 2 1/2 x 3/16 [2]
WIND LOAD STRUT - ③	L 2 1/2 x 2 1/2 x 3/16 [1]	L 2 1/2 x 2 1/2 x 3/16 [1]	L 2 1/2 x 2 1/2 x 3/16 [1]	L 2 1/2 x 2 1/2 x 3/16 [1]	L 2 1/2 x 2 1/2 x 3/16 [1]	L 2 1/2 x 2 1/2 x 3/16 [1]	L 2 1/2 x 2 1/2 x 3/16 [1]	L 2 1/2 x 2 1/2 x 3/16 [1]
TOTAL DEFL. & TRUSS D.L.	DEFL=1.94" L=69 lb/ft	DEFL=2.11" L=75 lb/ft	DEFL=2.53" L=75 lb/ft	DEFL=3.02" L=77 lb/ft	DEFL=2.97" L=79 lb/ft	DEFL=3.15" L=86 lb/ft	DEFL=3.46" L=93 lb/ft	DEFL=4.00" L=94 lb/ft

TOWER DETAILS

S = COLUMN SPACING	7.0'	7.0'	7.0'	7.0'	7.0'	7.0'	7.0'	7.0'
TOWER HEIGHT (COLUMN SIZE & UPLIFT (kips))								
15'	W 10 x 22 (27.5)	W 10 x 22 (28.7)	W 10 x 22 (30.1)	W 10 x 22 (31.5)	W 10 x 22 (32.8)	W 10 x 26 (34.0)	W 10 x 26 (35.5)	W 10 x 26 (36.9)
16'	W 10 x 22 (29.5)	W 10 x 22 (30.8)	W 10 x 22 (32.3)	W 10 x 22 (33.7)	W 10 x 22 (35.1)	W 10 x 26 (36.4)	W 10 x 26 (38.1)	W 10 x 26 (39.5)
17'	W 10 x 22 (31.4)	W 10 x 22 (32.8)	W 10 x 22 (34.4)	W 10 x 22 (35.9)	W 10 x 26 (37.6)	W 10 x 26 (39.0)	W 10 x 26 (40.6)	W 10 x 26 (42.2)
18'	W 10 x 22 (33.4)	W 10 x 22 (34.9)	W 10 x 22 (36.6)	W 10 x 26 (38.2)	W 10 x 26 (40.0)	W 10 x 26 (41.5)	W 10 x 26 (43.2)	W 10 x 26 (44.8)
19'	W 10 x 22 (35.5)	W 10 x 26 (36.8)	W 10 x 26 (38.5)	W 10 x 26 (40.5)	W 10 x 26 (42.2)	W 12 x 26 (44.1)	W 12 x 26 (45.8)	W 12 x 26 (47.5)
20'	W 10 x 22 (37.3)	W 10 x 26 (38.8)	W 10 x 26 (40.7)	W 10 x 26 (42.7)	W 10 x 26 (44.5)	W 12 x 26 (46.6)	W 12 x 26 (48.3)	W 12 x 26 (50.2)
21'	W 10 x 26 (39.3)	W 10 x 26 (41.1)	W 12 x 26 (43.1)	W 12 x 26 (45.2)	W 12 x 26 (47.3)	W 12 x 26 (49.1)	W 12 x 26 (50.9)	W 12 x 26 (52.8)
22'	W 10 x 26 (41.3)	W 10 x 26 (43.2)	W 12 x 26 (45.3)	W 12 x 26 (47.5)	W 12 x 26 (49.7)	W 12 x 26 (51.6)	W 12 x 26 (53.5)	W 12 x 26 (55.5)
23'	W 12 x 26 (43.3)	W 12 x 26 (45.6)	W 12 x 26 (47.5)	W 12 x 26 (49.8)	W 12 x 26 (52.1)	W 12 x 26 (54.1)	W 14 x 30 (56.6)	W 14 x 30 (58.7)
24'	W 12 x 26 (45.6)	W 12 x 26 (47.7)	W 12 x 26 (49.7)	W 12 x 26 (52.1)	W 12 x 26 (54.5)	W 14 x 30 (56.6)	W 14 x 30 (59.2)	W 14 x 30 (61.5)
25'	W 12 x 26 (47.6)	W 12 x 26 (49.8)	W 12 x 26 (51.5)	W 14 x 30 (55.0)	W 14 x 30 (57.5)	W 14 x 30 (59.7)	W 14 x 30 (61.9)	W 14 x 30 (64.2)
26'	W 12 x 26 (49.7)	W 12 x 26 (52.0)	W 12 x 26 (53.7)	W 14 x 30 (57.4)	W 14 x 30 (59.7)	W 14 x 30 (62.2)	W 14 x 30 (64.6)	W 14 x 30 (67.0)
27'	W 12 x 26 (51.7)	W 14 x 30 (54.5)	W 14 x 30 (57.0)	W 14 x 30 (59.8)	W 14 x 30 (62.5)	W 14 x 34 (64.8)	W 14 x 34 (67.2)	W 14 x 34 (69.7)
28'	W 12 x 26 (53.8)	W 14 x 30 (56.7)	W 14 x 30 (59.3)	W 14 x 30 (62.2)	W 14 x 30 (64.9)	W 14 x 34 (67.4)	W 14 x 34 (69.9)	W 14 x 34 (72.5)
29'	W 14 x 30 (56.3)	W 14 x 30 (58.9)	W 14 x 30 (61.6)	W 14 x 34 (64.3)	W 14 x 34 (67.4)	W 14 x 34 (69.9)	W 14 x 34 (72.6)	W 16 x 36 (75.8)
30'	W 14 x 30 (58.4)	W 14 x 30 (61.1)	W 14 x 30 (63.9)	W 14 x 34 (66.7)	W 14 x 34 (69.9)	W 14 x 34 (72.5)	W 16 x 36 (75.3)	W 16 x 36 (78.6)

Tower Height = (HL + HR)/2

ZONE 4 NO ICE 70 M.P.H. WIND

TRUSS DETAILS

(3/4" Dia. H.S. Bolts — Spans 96' Thru 155')

SPAN	140'	145'	150'	155'
W x D = WIDTH x DEPTH	5.0 x 5.0	5.0 x 5.0	5.0 x 5.0	5.0 x 5.0
CHORD -②, Unless Otherwise Shown	L 5 x 5 x 7/16 [14]	L 5 x 5 x 7/16 [15]	L 5 x 5 x 1/2 [16]	L 5 x 5 x 1/2 [18]
DEAD LOAD DIAGONAL -③	L 3 x 2 x 1/4 [2]	L 3 x 2 x 1/4 [2]	L 3 x 2 1/2 x 1/4 [2]	L 3 x 2 1/2 x 1/4 [2]
WIND LOAD DIAGONAL -③	L 3 x 3 x 1/4 [3]	L 3 x 3 x 1/4 [3]	L 3 1/2 x 3 1/2 x 1/4 [3]	L 3 1/2 x 3 1/2 x 1/4 [3]
DEAD LOAD VERTICAL -③	L 3 x 2 1/2 x 3/16 [2]	L 3 x 2 1/2 x 3/16 [2]	L 3 x 3 x 3/16 [2]	L 3 x 3 x 3/16 [2]
WIND LOAD STRUT - ③	L 2 1/2 x 2 1/2 x 3/16 [1]	L 2 1/2 x 2 1/2 x 3/16 [1]	L 2 1/2 x 2 1/2 x 3/16 [1]	L 2 1/2 x 2 1/2 x 3/16 [1]
TOTAL DEFL. & TRUSS D.L.	DEFL=4.22" L=102 lb/ft	DEFL=4.83" L=102 lb/ft	DEFL=5.17" L=114 lb/ft	DEFL=5.87" L=114 lb/ft

TOWER DETAILS

S = COLUMN SPACING	7.5'	7.5'	7.5'	7.5'
TOWER HEIGHT (COLUMN SIZE & UPLIFT (kips))				
15'	W 12 x 26 (35.0)	W 12 x 26 (36.4)	W 12 x 26 (37.3)	W 12 x 26 (38.8)
16'	W 12 x 26 (37.6)	W 12 x 26 (39.1)	W 12 x 26 (40.1)	W 12 x 26 (41.7)
17'	W 12 x 26 (40.1)	W 12 x 26 (41.7)	W 12 x 26 (42.8)	W 12 x 26 (44.5)
18'	W 12 x 26 (42.7)	W 12 x 26 (44.4)	W 12 x 26 (45.6)	W 12 x 26 (47.4)
19'	W 12 x 26 (45.3)	W 12 x 26 (47.1)	W 12 x 26 (48.4)	W 12 x 26 (50.3)
20'	W 12 x 26 (47.9)	W 12 x 26 (49.7)	W 12 x 26 (51.1)	W 14 x 30 (53.2)
21'	W 12 x 26 (50.5)	W 14 x 30 (52.8)	W 14 x 30 (54.3)	W 14 x 30 (56.5)
22'	W 14 x 30 (53.1)	W 14 x 30 (55.6)	W 14 x 30 (57.2)	W 14 x 30 (59.4)
23'	W 14 x 30 (56.2)	W 14 x 30 (58.3)	W 14 x 30 (60.0)	W 14 x 34 (62.3)
24'	W 14 x 30 (58.8)	W 14 x 30 (61.1)	W 14 x 30 (62.8)	W 14 x 34 (65.2)
25'	W 14 x 30 (60.9)	W 14 x 34 (63.8)	W 14 x 34 (65.7)	W 14 x 34 (68.2)
26'	W 14 x 30 (63.6)	W 14 x 34 (66.6)	W 14 x 34 (68.5)	W 14 x 34 (71.2)
27'	W 14 x 34 (66.8)	W 14 x 34 (69.3)	W 16 x 36 (72.1)	W 16 x 36 (74.8)
28'	W 14 x 34 (69.5)	W 16 x 36 (72.1)	W 16 x 36 (75.0)	W 16 x 36 (77.9)
29'	W 16 x 36 (72.9)	W 16 x 36 (75.7)	W 16 x 36 (77.9)	W 16 x 40 (80.9)
30'	W 16 x 36 (75.7)	W 16 x 36 (78.5)	W 16 x 36 (80.9)	W 16 x 40 (84.0)

Tower Height = (HL + HR)/2

KEY TO TRUSS AND TOWER DETAILS

Truss members are all angles.
Truss columns are all wide flange shapes.

W 10 x 26 (44.2) ← 44.2 kips Uplift at base plate
- 26 Pounds per foot.
- 10" Nominal size
- Wide Flange

DEFL = 0.12" = inches Deflection due to dead load of truss, walkway, signs and lights.
DL = 42 lb/ft = pounds per foot dead load of truss members only; does not include walkway, signs, and lights.

NOTE: Details on these sheets are for Design Wind Heights up to 30 feet.

GENERAL NOTES

Design conforms to AASHTO 1994 Standard Specifications for Structural Supports for Highway Signs, Luminaires, and Traffic Signals and Interim Revisions thereto.

For overhead sign bridges with different tower heights, average the height of the two towers and use the tabulated height nearest the calculated average. For average heights falling midway between the two tabulated heights use the larger height.

For truss lengths falling between those shown in the tables use the sizes called for in the next longer span.

Overhead sign bridges are designed for the equivalent area of a 10 foot deep sign panel over 75 percent of the span length, located as necessary to produce maximum stress. Design includes 3 pounds per square foot for sign panel, 20 pounds per linear foot for lights, and 50 pounds per linear foot for walkway, all placed as specified for the design sign panel.

Refer to "Overhead Sign Bridge Truss Details" for details called out in plan and elevation views.

The number of High Strength Bolts required in truss connection or splice are indicated in brackets, e.g. [3], after the member size.

DISCLAIMER:
The use of this standard is governed by the "Texas Engineering Practice Act". No warranty of any kind is made by TxDOT for any purpose whatsoever. TxDOT assumes no responsibility for the conversion of this standard to other formats or for incorrect results or damages resulting from its use.

PATH:
LEVELS DIS.

SHEET 2 OF 2

Texas Department of Transportation
Traffic Operations Division

OVERHEAD SIGN BRIDGE DETAILS

OSB-Z4

FILE: osb-z4.dgn	DN: TxDOT	CK: TxDOT	DW: TxDOT	CK: TxDOT
© TxDOT November 2007	DISTRICT	FEDERAL AID PROJECT		SHEET
REVISIONS 8/08 add missing HS bolt dia (select spans); applicability note; noted design specifications	AUSTIN			635
	COUNTY		CONTROL-SECT-JOB	HIGHWAY
	WILLIAMSON		0683-06-027	SH 45 LOOP 1

41B

ZONE 4 NO ICE 70 M.P.H. WIND

TRUSS DETAILS

5/8" Dia. H.S. Bolts Spans 40' Thru 95'

SPAN	40'	45'	50'	55'	60'	65'	70'	75'
W x D = WIDTH x DEPTH	4.0 x 4.0	4.0 x 4.0	4.0 x 4.0	4.0 x 4.0	4.0 x 4.0	4.0 x 4.0	4.0 x 4.0	4.0 x 4.0
CHORD -②, Unless Otherwise Shown	L 3 x 3 x 3/16 ③ [4]	L 3 x 3 x 3/16 ③ [4]	L 3 x 3 x 3/16 ③ [4]	L 3 x 3 x 1/4 ③ [4]	L 3 x 3 x 1/4 [6]	L 3 x 3 x 5/16 [6]	L 3 x 3 x 5/16 [6]	L 3 x 3 x 5/16 [8]
DEAD LOAD DIAGONAL -③	L 2 x 2 x 3/16 [2]	L 2 x 2 x 3/16 [2]	L 2 x 2 x 3/16 [2]	L 2 x 2 x 3/16 [2]	L 2 x 2 x 3/16 [2]	L 2 x 2 x 3/16 [2]	L 2 x 2 x 3/16 [2]	L 2 x 2 x 3/16 [2]
WIND LOAD DIAGONAL -③	L 2 1/2 x 2 1/2 x 3/16 [2]	L 2 1/2 x 2 1/2 x 3/16 [2]	L 2 1/2 x 2 1/2 x 3/16 [2]	L 2 1/2 x 2 1/2 x 3/16 [2]	L 2 1/2 x 2 1/2 x 3/16 [2]	L 3 x 3 x 3/16 [2]	L 3 x 3 x 3/16 [2]	L 3 x 3 x 3/16 [2]
DEAD LOAD VERTICAL -③	L 2 x 2 x 3/16 [2]	L 2 x 2 x 3/16 [2]	L 2 x 2 x 3/16 [2]	L 2 x 2 x 3/16 [2]	L 2 x 2 x 3/16 [2]	L 2 x 2 x 3/16 [2]	L 2 x 2 x 3/16 [2]	L 2 x 2 x 3/16 [2]
WIND LOAD STRUT - ③	L 2 x 2 x 3/16 [1]	L 2 x 2 x 3/16 [1]	L 2 x 2 x 3/16 [1]	L 2 x 2 x 3/16 [1]	L 2 x 2 x 3/16 [1]	L 2 x 2 x 3/16 [1]	L 2 x 2 x 3/16 [1]	L 2 x 2 x 3/16 [1]
TOTAL DEFL. & TRUSS D.L.	DEFL=0.17" L=37 lb/ft	DEFL=0.26" L=38 lb/ft	DEFL=0.38" L=38 lb/ft	DEFL=0.36" L=43 lb/ft	DEFL=0.55" L=43 lb/ft	DEFL=0.58" L=50 lb/ft	DEFL=0.77" L=50 lb/ft	DEFL=0.99" L=50 lb/ft

TOWER DETAILS

S = COLUMN SPACING	6.0'	6.0'	6.0'	6.0'	6.0'	6.0'	6.5'	6.5'
TOWER HEIGHT (COLUMN SIZE & UPLIFT (kips))								
25'	W 10 x 22 (31.1)	W 10 x 22 (34.1)	W 10 x 22 (36.9)	W 10 x 26 (39.8)	W 10 x 26 (42.7)	W 10 x 26 (45.6)	W 10 x 26 (44.5)	W 12 x 26 (47.3)
26'	W 10 x 22 (32.7)	W 10 x 22 (35.7)	W 10 x 22 (38.7)	W 10 x 26 (41.6)	W 10 x 26 (44.7)	W 10 x 26 (47.7)	W 12 x 26 (46.6)	W 12 x 26 (49.4)
27'	W 10 x 22 (34.2)	W 10 x 22 (37.4)	W 10 x 26 (40.4)	W 10 x 26 (43.5)	W 10 x 26 (46.7)	W 12 x 26 (49.8)	W 12 x 26 (48.6)	W 12 x 26 (51.6)
28'	W 10 x 22 (35.8)	W 10 x 26 (38.9)	W 10 x 26 (42.2)	W 10 x 26 (45.4)	W 12 x 26 (48.7)	W 12 x 26 (51.9)	W 12 x 26 (50.7)	W 12 x 26 (53.8)
29'	W 10 x 26 (37.2)	W 10 x 26 (40.6)	W 10 x 26 (44.0)	W 12 x 26 (47.3)	W 12 x 26 (50.8)	W 12 x 26 (54.1)	W 12 x 26 (52.8)	W 12 x 26 (56.0)
30'	W 10 x 26 (38.8)	W 10 x 26 (42.3)	W 12 x 26 (45.8)	W 12 x 26 (49.3)	W 12 x 26 (52.8)	W 12 x 26 (56.3)	W 12 x 26 (54.9)	W 14 x 30 (58.1)
31'	W 10 x 26 (40.5)	W 10 x 26 (44.0)	W 12 x 26 (47.7)	W 12 x 26 (51.3)	W 12 x 26 (54.9)	W 14 x 30 (58.4)	W 14 x 30 (57.0)	W 14 x 30 (60.4)
32'	W 10 x 26 (42.1)	W 12 x 26 (45.8)	W 12 x 26 (49.6)	W 12 x 26 (53.3)	W 12 x 26 (57.0)	W 14 x 30 (60.6)	W 14 x 30 (59.1)	W 14 x 30 (62.7)
33'	W 12 x 26 (43.8)	W 12 x 26 (47.6)	W 12 x 26 (51.4)	W 12 x 26 (55.3)	W 14 x 30 (59.1)	W 14 x 30 (62.8)	W 14 x 30 (61.3)	W 14 x 34 (64.8)
34'	W 12 x 26 (45.4)	W 12 x 26 (49.3)	W 12 x 26 (53.4)	W 14 x 30 (57.2)	W 14 x 30 (61.2)	W 14 x 30 (65.1)	W 14 x 34 (63.3)	W 14 x 34 (67.1)
35'	W 12 x 26 (47.1)	W 12 x 26 (51.2)	W 14 x 30 (55.2)	W 14 x 30 (59.2)	W 14 x 30 (63.3)	W 14 x 34 (67.2)	W 14 x 34 (65.5)	W 14 x 34 (69.4)
36'	W 12 x 26 (48.8)	W 14 x 30 (52.9)	W 14 x 30 (57.1)	W 14 x 30 (61.3)	W 14 x 34 (65.1)	W 14 x 34 (69.5)	W 14 x 34 (67.7)	W 14 x 34 (71.7)
37'	W 12 x 26 (50.6)	W 14 x 30 (54.7)	W 14 x 30 (59.1)	W 14 x 34 (63.2)	W 14 x 34 (67.3)	W 14 x 34 (71.8)	W 14 x 34 (70.0)	W 16 x 36 (73.8)
38'	W 14 x 30 (52.1)	W 14 x 30 (56.6)	W 14 x 30 (61.0)	W 14 x 34 (65.2)	W 14 x 34 (69.5)	W 14 x 34 (74.1)	W 16 x 36 (72.0)	W 16 x 36 (76.2)
39'	W 14 x 30 (53.9)	W 14 x 30 (58.4)	W 14 x 34 (62.8)	W 14 x 34 (67.3)	W 14 x 34 (71.7)	W 16 x 36 (76.2)	W 16 x 36 (74.3)	W 16 x 36 (78.6)
40'	W 14 x 30 (55.7)	W 14 x 34 (60.1)	W 14 x 34 (64.9)	W 14 x 34 (69.5)	W 16 x 36 (74.0)	W 16 x 36 (78.6)	W 16 x 36 (76.5)	W 16 x 36 (80.9)
42'	W 14 x 34 (59.0)	W 14 x 34 (63.9)	W 14 x 34 (68.9)	W 16 x 36 (73.5)	W 16 x 36 (78.5)	W 16 x 36 (83.3)	W 16 x 40 (80.7)	W 16 x 40 (85.3)
45'	W 14 x 34 (64.6)	W 16 x 36 (69.6)	W 16 x 36 (74.9)	W 16 x 36 (80.1)	W 16 x 40 (84.9)	W 16 x 40 (90.1)	W 16 x 40 (87.6)	W 18 x 46 (92.4)

ZONE 4 NO ICE 70 M.P.H. WIND

TRUSS DETAILS

5/8" Dia. H.S. Bolts Spans 40' Thru 95'

SPAN	80'	85'	90'	95'
W x D = WIDTH x DEPTH	4.0 x 4.0	4.0 x 4.0	4.0 x 4.0	4.0 x 4.0
CHORD -②, Unless Otherwise Shown	L 3 x 3 x 3/8 [9]	L 3 x 3 x 7/16 [10]	L 3 1/2 x 3 1/2 x 3/8 [11]	L 3 1/2 x 3 1/2 x 3/8 [11]
DEAD LOAD DIAGONAL -③	L 2 x 2 x 3/16 [2]	L 2 x 2 x 3/16 [2]	L 2 x 2 x 3/16 [2]	L 2 1/2 x 2 1/2 x 3/16 [2]
WIND LOAD DIAGONAL -③	L 3 x 3 x 3/16 [2]	L 3 x 3 x 3/16 [2]	L 3 x 2 1/2 x 1/4 [3]	L 3 x 2 1/2 x 1/4 [3]
DEAD LOAD VERTICAL -③	L 2 x 2 x 3/16 [2]	L 2 x 2 x 3/16 [2]	L 2 x 2 x 3/16 [2]	L 2 x 2 x 3/16 [2]
WIND LOAD STRUT - ③	L 2 x 2 x 3/16 [1]	L 2 x 2 x 3/16 [1]	L 2 x 2 x 3/16 [1]	L 2 x 2 x 3/16 [1]
TOTAL DEFL. & TRUSS D.L.	DEFL=1.12" L=55 lb/ft	DEFL=1.29" L=60 lb/ft	DEFL=1.60" L=63 lb/ft	DEFL=1.95" L=64 lb/ft

TOWER DETAILS

S = COLUMN SPACING	6.5'	6.5'	6.5'	6.5'
TOWER HEIGHT (COLUMN SIZE & UPLIFT (kips))				
25'	W 12 x 26 (49.9)	W 12 x 26 (52.6)	W 12 x 26 (55.3)	W 12 x 26 (58.1)
26'	W 12 x 26 (52.2)	W 12 x 26 (55.0)	W 12 x 26 (57.8)	W 14 x 30 (60.6)
27'	W 12 x 26 (54.5)	W 12 x 26 (57.4)	W 14 x 30 (60.2)	W 14 x 30 (63.2)
28'	W 12 x 26 (56.8)	W 14 x 30 (59.7)	W 14 x 30 (62.7)	W 14 x 30 (65.8)
29'	W 14 x 30 (59.0)	W 14 x 30 (62.1)	W 14 x 30 (65.3)	W 14 x 34 (68.3)
30'	W 14 x 30 (61.4)	W 14 x 30 (64.6)	W 14 x 34 (67.7)	W 14 x 34 (71.0)
31'	W 14 x 30 (63.7)	W 14 x 34 (67.0)	W 14 x 34 (70.3)	W 14 x 34 (73.7)
32'	W 14 x 34 (65.9)	W 14 x 34 (69.4)	W 14 x 34 (72.8)	W 14 x 34 (76.4)
33'	W 14 x 34 (68.3)	W 14 x 34 (71.9)	W 14 x 34 (75.5)	W 16 x 36 (78.9)
34'	W 14 x 34 (70.7)	W 14 x 34 (74.4)	W 16 x 36 (77.9)	W 16 x 36 (81.7)
35'	W 14 x 34 (73.1)	W 16 x 36 (76.7)	W 16 x 36 (80.5)	W 16 x 36 (84.4)
36'	W 16 x 36 (75.4)	W 16 x 36 (79.3)	W 16 x 36 (83.2)	W 16 x 36 (87.2)
37'	W 16 x 36 (77.8)	W 16 x 36 (81.8)	W 16 x 36 (85.9)	W 16 x 40 (89.5)
38'	W 16 x 36 (80.3)	W 16 x 36 (84.4)	W 16 x 40 (88.1)	W 16 x 40 (92.3)
39'	W 16 x 36 (82.8)	W 16 x 40 (86.5)	W 16 x 40 (90.8)	W 16 x 40 (95.1)
40'	W 16 x 40 (84.8)	W 16 x 40 (89.1)	W 16 x 40 (93.5)	W 18 x 46 (97.7)
42'	W 16 x 40 (89.8)	W 16 x 40 (94.4)	W 18 x 46 (98.8)	W 18 x 46 (103.4)
45'	W 18 x 46 (97.3)	W 18 x 46 (102.1)	W 18 x 46 (107.0)	W 18 x 50 (112.0)

Tower Height = (HL + HR)/2

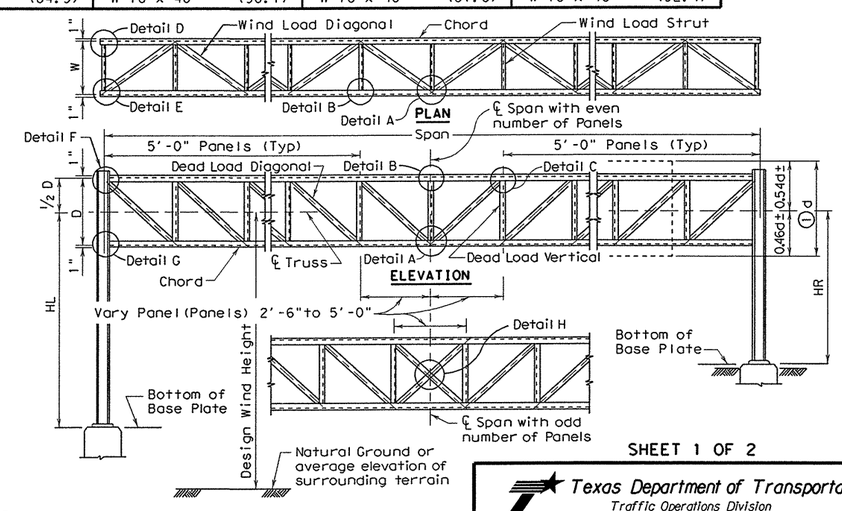

① d = Sign Depth
Where signs of different depths are used, the bottom edges of all signs may be placed in line. Where this is done, all signs should be so positioned that the bottom edges are approximately 0.46 of the depth of the deepest sign below the ℄ of the truss.

② "Low-Alloy Steel" for non-bridge structures per Item 442, "Metal For Structures".

③ "Carbon Steel" for non-bridge structures per Item 442, "Metal For Structures".

SHEET 1 OF 2

Texas Department of Transportation
Traffic Operations Division

HIGH LEVEL OVERHEAD SIGN BRIDGE DETAILS

HOSB-Z4

FILE: hosb-z4.dgn	DN: TxDOT	CK: TxDOT	DW: TxDOT	CK: TxDOT
© TxDOT November 2007	DISTRICT	FEDERAL AID PROJECT		SHEET
REVISIONS	AUSTIN			636
	COUNTY		CONTROL-SECT-JOB	HIGHWAY
	WILLIAMSON		0683-06-027	SH 45 LOOP 1

42A

DISCLAIMER:
The use of this standard is governed by the "Texas Engineering Practice Act". No warranty of any kind is made by TxDOT for any purpose whatsoever. TxDOT assumes no responsibility for the accuracy of this standard in other formats or for incorrect results or damages resulting from its use.

PATH:
LEVELS DL: 20

ZONE 4 NO ICE 70 M.P.H. WIND

TRUSS DETAILS

¾" Dia. H.S. Bolts Spans 96' Thru 155'

SPAN	100'	105'	110'	115'	120'	125'	130'	135'
W x D = WIDTH x DEPTH	4.5 x 4.5	4.5 x 4.5	4.5 x 4.5	4.5 x 4.5	5.0 x 5.0	5.0 x 5.0	5.0 x 5.0	5.0 x 5.0
CHORD -②, Unless Otherwise Shown	L 3 ½x 3 ½x ⅜ [7]	L 3 ½x 3 ½x 7/16 [9]	L 4 x 4 x ⅜ [9]	L 4 x 4 x 7/16 [10]	L 4 x 4 x 7/16 [10]	L 4 x 4 x 7/16 [11]	L 4 x 4 x ½ [12]	L 5 x 5 x 7/16 [13]
DEAD LOAD DIAGONAL -③	L 3 x 2 x 3/16 [2]	L 3 x 2 x 3/16 [2]	L 3 x 2 x 3/16 [2]	L 3 x 2 ½x 3/16 [2]	L 3 x 2 ½x 3/16 [2]	L 3 x 2 ½x 3/16 [2]	L 3 x 2 ½x 3/16 [2]	L 3 x 3 x 3/16 [2]
WIND LOAD DIAGONAL -③	L 3 x 2 ½x ¼ [2]	L 3 x 3 x ¼ [2]	L 3 x 3 x ¼ [2]	L 3 x 3 x ¼ [2]	L 3 x 3 x ¼ [2]	L 3 x 3 x ¼ [2]	L 3 x 3 x ¼ [2]	L 3 x 3 x ¼ [3]
DEAD LOAD VERTICAL -③	L 3 x 2 x 3/16 [2]	L 3 x 2 x 3/16 [2]	L 3 x 2 x 3/16 [2]	L 3 x 2 x 3/16 [2]	L 3 x 2 x 3/16 [2]	L 3 x 2 x 3/16 [2]	L 3 x 2 ½x 3/16 [2]	L 3 x 2 ½x 3/16 [2]
WIND LOAD STRUT - ③	L 2 ½x 2 ½x 3/16 [1]	L 2 ½x 2 ½x 3/16 [1]	L 2 ½x 2 ½x 3/16 [1]	L 2 ½x 2 ½x 3/16 [1]	L 2 ½x 2 ½x 3/16 [1]	L 2 ½x 2 ½x 3/16 [1]	L 2 ½x 2 ½x 3/16 [1]	L 2 ½x 2 ½x 3/16 [1]
TOTAL DEFL. & TRUSS D.L.	DEFL=1.96" L=69 lb/ft	DEFL=2.16" L=76 lb/ft	DEFL=2.59" L=76 lb/ft	DEFL=2.76" L=82 lb/ft	DEFL=2.74" L=86 lb/ft	DEFL=3.20" L=86 lb/ft	DEFL=3.44" L=93 lb/ft	DEFL=3.96" L=100 lb/ft

TOWER DETAILS

S = COLUMN SPACING	7.0'	7.0'	7.0'	7.0'	7.0'	7.0'	7.0'	7.0'
TOWER HEIGHT (Tower Height = (HL + HR)/2) — COLUMN SIZE & UPLIFT (kips)								
25'	W 14 x 30 (56.4)	W 14 x 30 (58.6)	W 14 x 30 (61.2)	W 14 x 34 (63.5)	W 14 x 34 (66.3)	W 14 x 34 (68.9)	W 14 x 34 (71.3)	W 14 x 34 (73.7)
26'	W 14 x 30 (58.9)	W 14 x 30 (61.3)	W 14 x 30 (64.0)	W 14 x 34 (66.3)	W 14 x 34 (69.3)	W 14 x 34 (72.0)	W 14 x 34 (74.5)	W 14 x 34 (76.9)
27'	W 14 x 30 (61.4)	W 14 x 30 (63.9)	W 14 x 34 (66.5)	W 14 x 34 (69.2)	W 14 x 34 (72.3)	W 14 x 34 (75.0)	W 14 x 34 (77.6)	W 16 x 36 (80.1)
28'	W 14 x 30 (64.0)	W 14 x 34 (66.4)	W 14 x 34 (69.3)	W 14 x 34 (72.0)	W 14 x 34 (75.2)	W 14 x 34 (78.1)	W 16 x 36 (80.6)	W 16 x 36 (83.3)
29'	W 14 x 34 (66.4)	W 14 x 34 (69.1)	W 14 x 34 (72.1)	W 14 x 34 (74.9)	W 16 x 36 (78.0)	W 16 x 36 (81.0)	W 16 x 36 (83.8)	W 16 x 36 (86.6)
30'	W 14 x 34 (69.0)	W 14 x 34 (71.7)	W 16 x 36 (74.7)	W 16 x 36 (77.7)	W 16 x 36 (81.0)	W 16 x 36 (84.1)	W 16 x 36 (87.1)	W 16 x 40 (89.6)
31'	W 14 x 34 (71.6)	W 14 x 34 (74.5)	W 16 x 36 (77.5)	W 16 x 36 (80.6)	W 16 x 36 (84.0)	W 16 x 36 (87.3)	W 16 x 40 (90.0)	W 16 x 40 (93.0)
32'	W 14 x 34 (74.2)	W 16 x 36 (77.0)	W 16 x 36 (80.3)	W 16 x 36 (83.5)	W 16 x 36 (87.1)	W 16 x 40 (90.1)	W 16 x 40 (93.2)	W 16 x 40 (96.3)
33'	W 16 x 36 (76.6)	W 16 x 36 (79.7)	W 16 x 36 (83.2)	W 16 x 40 (86.4)	W 16 x 40 (89.8)	W 16 x 40 (93.2)	W 16 x 40 (96.4)	W 18 x 46 (99.5)
34'	W 16 x 36 (79.3)	W 16 x 36 (82.5)	W 16 x 40 (86.0)	W 16 x 40 (89.0)	W 16 x 40 (92.8)	W 16 x 40 (96.4)	W 18 x 46 (99.5)	W 18 x 46 (102.9)
35'	W 16 x 36 (81.9)	W 16 x 40 (84.9)	W 16 x 40 (88.5)	W 16 x 40 (92.0)	W 16 x 40 (95.9)	W 18 x 46 (99.3)	W 18 x 46 (102.8)	W 18 x 46 (106.2)
36'	W 16 x 40 (84.2)	W 16 x 40 (87.6)	W 16 x 40 (91.4)	W 18 x 46 (94.7)	W 18 x 46 (98.8)	W 18 x 46 (102.5)	W 18 x 46 (106.1)	W 18 x 46 (109.6)
37'	W 16 x 40 (86.9)	W 16 x 40 (90.4)	W 18 x 46 (94.3)	W 18 x 46 (97.7)	W 18 x 46 (101.9)	W 18 x 46 (105.7)	W 18 x 46 (109.4)	W 18 x 46 (113.0)
38'	W 16 x 40 (89.6)	W 18 x 46 (93.0)	W 18 x 46 (96.9)	W 18 x 46 (100.7)	W 18 x 46 (105.0)	W 18 x 46 (108.9)	W 18 x 46 (112.7)	W 18 x 50 (116.3)
39'	W 18 x 46 (92.1)	W 18 x 46 (95.8)	W 18 x 46 (99.9)	W 18 x 46 (103.7)	W 18 x 46 (108.1)	W 18 x 46 (112.2)	W 18 x 50 (115.8)	W 18 x 50 (119.7)
40'	W 18 x 46 (94.8)	W 18 x 46 (98.6)	W 18 x 46 (102.8)	W 18 x 46 (106.8)	W 18 x 46 (111.2)	W 18 x 50 (115.2)	W 18 x 50 (119.2)	W 18 x 50 (123.2)
42'	W 18 x 46 (100.3)	W 18 x 46 (104.3)	W 18 x 46 (108.7)	W 18 x 50 (112.6)	W 18 x 50 (117.3)	W 18 x 55 (121.7)	W 18 x 55 (125.7)	W 18 x 55 (129.9)
45'	W 18 x 50 (108.3)	W 18 x 50 (112.7)	W 18 x 50 (117.4)	W 18 x 55 (121.7)	W 18 x 55 (126.7)	W 21 x 57 (131.0)	W 21 x 57 (135.5)	W 21 x 57 (140.0)

ZONE 4 NO ICE 70 M.P.H. WIND

TRUSS DETAILS

¾" Dia. H.S. Bolts Spans 96' Thru 155'

SPAN	140'	145'	150'	155'
W x D = WIDTH x DEPTH	5.0 x 5.0	5.0 x 5.0	5.0 x 5.0	5.0 x 5.0
CHORD -②, Unless Otherwise Shown	L 5 x 5 x 7/16 [14]	L 5 x 5 x ½ [15]	L 5 x 5 x ½ [16]	L 5 x 5 x ½ [18]
DEAD LOAD DIAGONAL -③	L 3 x 2 x ¼ [2]	L 3 x 2 x ¼ [2]	L 3 x 2 ½x ¼ [2]	L 3 x 2 ½x ¼ [2]
WIND LOAD DIAGONAL -③	L 3 ½x 3 x ¼ [3]	L 3 ½x 3 ½x ¼ [3]	L 3 ½x 3 ½x ¼ [3]	L 3 ½x 3 ½x ¼ [3]
DEAD LOAD VERTICAL -③	L 3 x 2 ½x 3/16 [2]	L 3 x 2 ½x 3/16 [2]	L 3 x 3 x 3/16 [2]	L 3 x 3 x 3/16 [2]
WIND LOAD STRUT - ③	L 2 ½x 2 ½x 3/16 [1]	L 2 ½x 2 ½x 3/16 [1]	L 2 ½x 2 ½x 3/16 [1]	L 2 ½x 2 ½x 3/16 [1]
TOTAL DEFL. & TRUSS D.L.	DEFL=4.53" L=103 lb/ft	DEFL=4.43" L=112 lb/ft	DEFL=5.21" L=115 lb/ft	DEFL=5.24" L=115 lb/ft

TOWER DETAILS

S = COLUMN SPACING	7.5'	7.5'	7.5'	7.5'
TOWER HEIGHT (Tower Height = (HL + HR)/2) — COLUMN SIZE & UPLIFT (kips)				
25'	W 14 x 34 (70.6)	W 14 x 34 (72.9)	W 16 x 36 (75.2)	W 16 x 36 (77.8)
26'	W 14 x 34 (73.7)	W 16 x 36 (76.0)	W 16 x 36 (78.6)	W 16 x 36 (81.3)
27'	W 16 x 36 (76.7)	W 16 x 36 (79.2)	W 16 x 36 (81.9)	W 16 x 36 (84.7)
28'	W 16 x 36 (79.9)	W 16 x 36 (82.5)	W 16 x 40 (85.0)	W 16 x 40 (87.9)
29'	W 16 x 36 (83.1)	W 16 x 40 (85.4)	W 16 x 40 (88.4)	W 16 x 40 (91.4)
30'	W 16 x 40 (85.9)	W 16 x 40 (88.7)	W 16 x 40 (91.8)	W 16 x 40 (94.9)
31'	W 16 x 40 (89.1)	W 16 x 40 (92.0)	W 18 x 46 (95.0)	W 18 x 46 (98.3)
32'	W 16 x 40 (92.3)	W 18 x 46 (95.2)	W 18 x 46 (98.4)	W 18 x 46 (101.8)
33'	W 18 x 46 (94.4)	W 18 x 46 (98.5)	W 18 x 46 (101.9)	W 18 x 46 (105.3)
34'	W 18 x 46 (98.7)	W 18 x 46 (101.9)	W 18 x 46 (105.3)	W 18 x 46 (108.9)
35'	W 18 x 46 (101.9)	W 18 x 46 (105.2)	W 18 x 46 (108.8)	W 18 x 50 (112.3)
36'	W 18 x 46 (105.2)	W 18 x 46 (108.6)	W 18 x 50 (112.1)	W 18 x 50 (115.9)
37'	W 18 x 46 (108.4)	W 18 x 50 (111.8)	W 18 x 50 (115.6)	W 18 x 50 (119.5)
38'	W 18 x 50 (111.5)	W 18 x 50 (115.2)	W 18 x 50 (119.1)	W 18 x 55 (122.9)
39'	W 18 x 50 (114.8)	W 18 x 50 (118.6)	W 18 x 55 (122.4)	W 18 x 55 (126.5)
40'	W 18 x 50 (118.2)	W 18 x 55 (121.8)	W 18 x 55 (125.9)	W 18 x 55 (130.1)
42'	W 18 x 55 (124.6)	W 18 x 55 (126.7)	W 21 x 57 (132.6)	W 21 x 57 (137.0)
45'	W 21 x 57 (134.3)	W 21 x 57 (138.7)	W 21 x 62 (143.1)	W 21 x 62 (147.8)

KEY TO TRUSS AND TOWER DETAILS

Truss members are all angles.
Truss columns are all wide flange shapes.

W 10 x 26 (44.2) ← 44.2 kips Uplift at base plate
- 26 Pounds per foot.
- 10" Nominal size
- Wide Flange

DEFL = 0.12" = inches Deflection due to dead load of truss, walkway, signs and lights.
DL = 42 lb/ft = pounds per foot dead load of truss members only; does not include walkway, signs, and lights.

NOTE: Details on these sheets are for Design Wind Heights between 30 feet and 50 feet.

GENERAL NOTES

Design conforms to AASHTO 1994 Standard Specifications for Structural Supports for Highway Signs, Luminaires, and Traffic Signals and Interim Revisions thereto.

For overhead sign bridges with different tower heights, average the height of the two towers and use the tabulated height nearest the calculated average. For average heights falling midway between the two tabulated heights use the larger height.

For truss lengths falling between those shown in the tables use the sizes called for in the next longer span.

Overhead sign bridges are designed for the equivalent area of a 10 foot deep sign panel over 75 percent of the span length, located as necessary to produce maximum stress. Design includes 3 pounds per square foot for sign panel, 20 pounds per linear foot for lights, and 50 pounds per linear foot for walkway, all placed as specified for the design sign panel.

Refer to "Overhead Sign Bridge Truss Details" for details called out in plan and elevation views.

The number of High Strength Bolts required in truss connection or splice are indicated in brackets, e.g. [3], after the member size.

SHEET 2 OF 2

DISCLAIMER:
The use of this standard is governed by the "Texas Engineering Practice Act". No warranty of any kind is made by TxDOT for any purpose whatsoever. TxDOT assumes no responsibility for the conversion of this standard to other formats or for incorrect results or damages resulting from its use.

Texas Department of Transportation
Traffic Operations Division

HIGH LEVEL OVERHEAD SIGN BRIDGE DETAILS

HOSB-Z4

FILE: hosb-z4.dgn	DN: TxDOT	CK: TxDOT	DW: TxDOT	CK: TxDOT
©TxDOT November 2007	DISTRICT	FEDERAL AID PROJECT		SHEET
REVISIONS 8/08 add missing HS bolt dia; applicability note; noted design specifications	AUSTIN			637
	COUNTY		CONTROL-SECT-JOB	HIGHWAY
	WILLIAMSON		0683-06-027	SH 45 LOOP 1

42B

DISCLAIMER: The use of this standard is governed by the "Texas Engineering Practice Act". No warranty of any kind is made by TxDOT for any purpose whatsoever. TxDOT assumes no responsibility for the conversion of this standard to other formats or for incorrect results or damages resulting from its use.

ZONE 4 WITH ICE 70 M.P.H. WIND

TRUSS DETAILS

5/8" Dia. H.S. Bolts Spans 40' Thru 95'

SPAN	40'	45'	50'	55'	60'	65'	70'	75'
W x D = WIDTH x DEPTH	4.0 x 4.0	4.0 x 4.0	4.0 x 4.0	4.0 x 4.0	4.0 x 4.0	4.0 x 4.0	4.0 x 4.0	4.0 x 4.0
CHORD -②, Unless Otherwise Shown	L 3 x 3 x 3/16 ③ [4]	L 3 x 3 x 3/16 ③ [4]	L 3 x 3 x 3/16 ③ [4]	L 3 x 3 x 1/4 ③ [4]	L 3 x 3 x 1/4 [6]	L 3 x 3 x 1/4 [6]	L 3 x 3 x 5/16 [6]	L 3 x 3 x 5/16 [8]
DEAD LOAD DIAGONAL -③	L 2 x 2 x 3/16 [2]	L 2 x 2 x 3/16 [2]	L 2 x 2 x 3/16 [2]	L 2 x 2 x 3/16 [2]	L 2 x 2 x 3/16 [2]	L 2 x 2 x 3/16 [2]	L 2 x 2 x 3/16 [2]	L 2 x 2 x 3/16 [3]
WIND LOAD DIAGONAL -③	L 2 1/2 x 2 1/2 x 3/16 [2]	L 2 1/2 x 2 1/2 x 3/16 [2]	L 2 1/2 x 2 1/2 x 3/16 [2]	L 2 1/2 x 2 1/2 x 3/16 [2]	L 2 1/2 x 2 1/2 x 3/16 [2]	L 3 x 3 x 3/16 [2]	L 3 x 3 x 3/16 [2]	L 3 x 3 x 3/16 [2]
DEAD LOAD VERTICAL -③	L 2 x 2 x 3/16 [2]	L 2 x 2 x 3/16 [2]	L 2 x 2 x 3/16 [2]	L 2 x 2 x 3/16 [2]	L 2 x 2 x 3/16 [2]	L 2 x 2 x 3/16 [2]	L 2 x 2 x 3/16 [2]	L 2 x 2 x 3/16 [2]
WIND LOAD STRUT - ③	L 2 x 2 x 3/16 [1]	L 2 x 2 x 3/16 [1]	L 2 x 2 x 3/16 [1]	L 2 x 2 x 3/16 [1]	L 2 x 2 x 3/16 [1]	L 2 x 2 x 3/16 [1]	L 2 x 2 x 3/16 [1]	L 2 x 2 x 3/16 [1]
TOTAL DEFL. & TRUSS D.L.	DEFL=0.14" L=37 lb/ft	DEFL=0.21" L=37 lb/ft	DEFL=0.31" L=38 lb/ft	DEFL=0.36" L=43 lb/ft	DEFL=0.49" L=43 lb/ft	DEFL=0.67" L=45 lb/ft	DEFL=0.76" L=50 lb/ft	DEFL=0.99" L=50 lb/ft

TOWER DETAILS

S = COLUMN SPACING	6.0'	6.0'	6.0'	6.0'	6.0'	6.0'	6.5'	6.5'
TOWER HEIGHT (Tower Height = (HL + HR)/2) — COLUMN SIZE & UPLIFT (kips)								
15'	W 10 x 15 (13.8)	W 10 x 15 (15.4)	W 10 x 15 (17.0)	W 10 x 15 (18.5)	W 10 x 15 (20.0)	W 10 x 15 (21.6)	W 10 x 15 (21.1)	W 10 x 17 (22.6)
16'	W 10 x 15 (14.8)	W 10 x 15 (16.5)	W 10 x 15 (18.2)	W 10 x 15 (19.8)	W 10 x 15 (21.5)	W 10 x 15 (23.2)	W 10 x 15 (22.6)	W 10 x 17 (24.2)
17'	W 10 x 15 (15.8)	W 10 x 15 (17.6)	W 10 x 15 (19.4)	W 10 x 15 (21.1)	W 10 x 15 (23.0)	W 10 x 15 (24.8)	W 10 x 17 (24.1)	W 10 x 17 (25.8)
18'	W 10 x 15 (16.8)	W 10 x 15 (18.7)	W 10 x 15 (20.6)	W 10 x 15 (22.5)	W 10 x 15 (24.4)	W 10 x 17 (26.3)	W 10 x 17 (25.6)	W 10 x 17 (27.4)
19'	W 10 x 15 (17.8)	W 10 x 15 (19.8)	W 10 x 15 (21.8)	W 10 x 15 (23.8)	W 10 x 15 (25.8)	W 10 x 17 (27.8)	W 10 x 22 (27.1)	W 10 x 22 (29.0)
20'	W 10 x 15 (18.8)	W 10 x 15 (20.9)	W 10 x 15 (23.1)	W 10 x 17 (25.1)	W 10 x 17 (27.1)	W 10 x 17 (29.3)	W 10 x 22 (28.6)	W 10 x 22 (30.6)
21'	W 10 x 15 (19.8)	W 10 x 15 (22.1)	W 10 x 15 (24.3)	W 10 x 17 (26.5)	W 10 x 17 (28.6)	W 10 x 22 (30.8)	W 10 x 22 (30.2)	W 10 x 22 (32.3)
22'	W 10 x 15 (20.9)	W 10 x 15 (23.2)	W 10 x 17 (25.6)	W 10 x 17 (27.8)	W 10 x 17 (30.0)	W 10 x 22 (32.4)	W 10 x 22 (31.7)	W 10 x 22 (33.9)
23'	W 10 x 15 (21.9)	W 10 x 15 (24.4)	W 10 x 17 (26.8)	W 10 x 22 (29.2)	W 10 x 22 (31.5)	W 10 x 22 (33.9)	W 10 x 22 (33.3)	W 10 x 22 (35.5)
24'	W 10 x 17 (23.0)	W 10 x 17 (25.5)	W 10 x 22 (28.1)	W 10 x 22 (30.6)	W 10 x 22 (33.0)	W 10 x 22 (35.5)	W 10 x 22 (34.8)	W 10 x 22 (37.2)
25'	W 10 x 17 (24.0)	W 10 x 17 (26.7)	W 10 x 22 (29.4)	W 10 x 22 (32.0)	W 10 x 22 (34.5)	W 10 x 22 (37.1)	W 10 x 26 (36.4)	W 10 x 26 (38.9)
26'	W 10 x 17 (25.1)	W 10 x 22 (27.9)	W 10 x 22 (30.6)	W 10 x 22 (33.3)	W 10 x 22 (36.0)	W 10 x 22 (38.7)	W 10 x 26 (37.9)	W 10 x 26 (40.5)
27'	W 10 x 22 (26.2)	W 10 x 22 (29.1)	W 10 x 22 (31.9)	W 10 x 22 (34.7)	W 10 x 26 (37.5)	W 10 x 26 (40.3)	W 10 x 26 (39.5)	W 12 x 26 (42.6)
28'	W 10 x 22 (27.3)	W 10 x 22 (30.3)	W 10 x 22 (33.2)	W 10 x 22 (36.2)	W 10 x 26 (39.0)	W 10 x 26 (41.9)	W 10 x 26 (41.1)	W 12 x 26 (44.3)
29'	W 10 x 22 (28.4)	W 10 x 22 (31.5)	W 10 x 22 (34.5)	W 10 x 26 (37.6)	W 10 x 26 (40.5)	W 12 x 26 (43.1)	W 12 x 26 (43.1)	W 12 x 26 (46.0)
30'	W 10 x 22 (29.5)	W 10 x 22 (36.7)	W 10 x 26 (35.9)	W 10 x 26 (39.0)	W 10 x 26 (42.0)	W 12 x 26 (44.7)	W 12 x 26 (44.7)	W 12 x 26 (47.7)

ZONE 4 WITH ICE 70 M.P.H. WIND

TRUSS DETAILS

5/8" Dia. H.S. Bolts Spans 40' Thru 95'

SPAN	80'	85'	90'	95'
W x D = WIDTH x DEPTH	4.0 x 4.0	4.0 x 4.0	4.0 x 4.0	4.0 x 4.0
CHORD -②, Unless Otherwise Shown	L 3 x 3 x 3/8 [9]	L 3 x 3 x 7/16 [10]	L 3 1/2 x 3 1/2 x 3/8 [11]	L 3 1/2 x 3 1/2 x 3/8 [11]
DEAD LOAD DIAGONAL -③	L 2 1/2 x 2 1/2 x 3/16 [3]	L 2 1/2 x 2 1/2 x 3/16 [3]	L 3 x 2 x 3/16 [3]	L 3 x 2 x 3/16 [3]
WIND LOAD DIAGONAL -③	L 3 x 3 x 3/16 [2]	L 3 x 3 x 3/16 [2]	L 3 x 3 x 1/4 [3]	L 3 x 2 1/2 x 1/4 [3]
DEAD LOAD VERTICAL -③	L 2 x 2 x 3/16 [2]	L 2 1/2 x 2 1/2 x 3/16 [2]	L 3 x 2 x 3/16 [2]	L 3 x 2 x 3/16 [2]
WIND LOAD STRUT - ③	L 2 x 2 x 3/16 [1]	L 2 x 2 x 3/16 [1]	L 2 x 2 x 3/16 [1]	L 2 x 2 x 3/16 [1]
TOTAL DEFL. & TRUSS D.L.	DEFL=1.12" L=56 lb/ft	DEFL=1.28" L=63 lb/ft	DEFL=1.58" L=63 lb/ft	DEFL=1.94" L=66 lb/ft

TOWER DETAILS

S = COLUMN SPACING	6.5'	6.5'	6.5'	6.5'
TOWER HEIGHT (Tower Height = (HL + HR)/2) — COLUMN SIZE & UPLIFT (kips)				
15'	W 10 x 17 (23.4)	W 10 x 17 (24.7)	W 10 x 17 (26.2)	W 10 x 22 (27.6)
16'	W 10 x 17 (25.0)	W 10 x 17 (26.5)	W 10 x 22 (28.0)	W 10 x 22 (29.5)
17'	W 10 x 17 (26.7)	W 10 x 22 (28.2)	W 10 x 22 (29.9)	W 10 x 22 (31.4)
18'	W 10 x 17 (28.3)	W 10 x 22 (30.0)	W 10 x 22 (31.7)	W 10 x 22 (33.4)
19'	W 10 x 22 (30.0)	W 10 x 22 (31.8)	W 10 x 22 (33.6)	W 10 x 22 (35.4)
20'	W 10 x 22 (31.7)	W 10 x 22 (33.5)	W 10 x 22 (35.5)	W 10 x 22 (37.3)
21'	W 10 x 22 (33.4)	W 10 x 22 (35.3)	W 10 x 26 (37.3)	W 10 x 26 (39.3)
22'	W 10 x 22 (35.1)	W 10 x 22 (37.1)	W 10 x 26 (39.2)	W 10 x 26 (41.3)
23'	W 10 x 26 (36.8)	W 10 x 26 (38.9)	W 10 x 26 (41.1)	W 12 x 26 (43.6)
24'	W 10 x 26 (38.5)	W 10 x 26 (40.7)	W 10 x 26 (43.0)	W 12 x 26 (45.6)
25'	W 10 x 26 (40.2)	W 12 x 26 (42.9)	W 12 x 26 (45.3)	W 12 x 26 (47.6)
26'	W 10 x 26 (41.9)	W 12 x 26 (44.7)	W 12 x 26 (47.2)	W 12 x 26 (49.7)
27'	W 12 x 26 (44.0)	W 12 x 26 (46.5)	W 12 x 26 (49.2)	W 12 x 26 (51.7)
28'	W 12 x 26 (45.8)	W 12 x 26 (48.4)	W 12 x 26 (51.1)	W 12 x 26 (53.8)
29'	W 12 x 26 (47.6)	W 12 x 26 (50.3)	W 12 x 26 (53.1)	W 14 x 30 (55.9)
30'	W 12 x 26 (49.3)	W 12 x 26 (52.2)	W 14 x 30 (55.1)	W 14 x 30 (58.0)

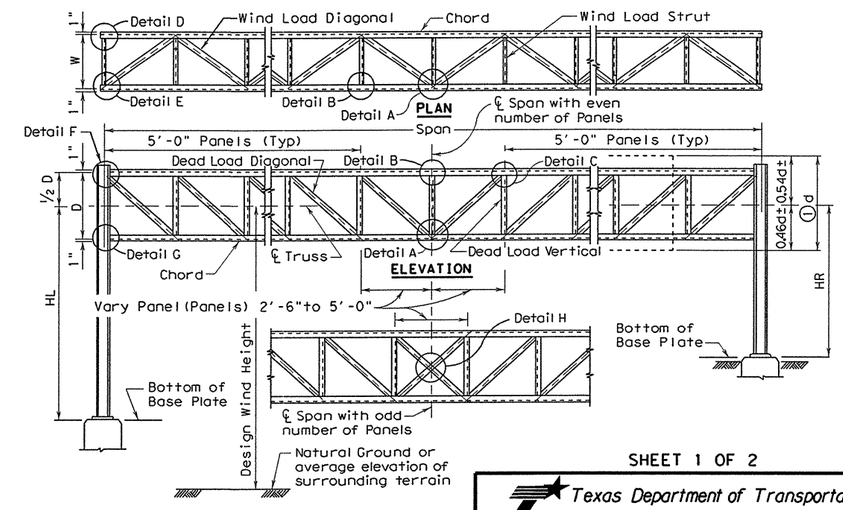

① d = Sign Depth
Where signs of different depths are used, the bottom edges of all signs may be placed in line. Where this is done, all signs should be so positioned that the bottom edges are approximately 0.46 of the depth of the deepest sign below the ℄ of the truss.

② "Low-Alloy Steel" for non-bridge structures per Item 442, "Metal For Structures".

③ "Carbon Steel" for non-bridge structures per Item 442, "Metal For Structures".

SHEET 1 OF 2

Texas Department of Transportation
Traffic Operations Division

OVERHEAD SIGN BRIDGE DETAILS

OSB-Z4I

©TxDOT November 2007

REVISIONS

DN: TXDOT	CK: TXDOT	DW: TXDOT	CK: TXDOT

CONT	SECT	JOB	HIGHWAY
0683	06	027	LP 1/SH 45

DIST	COUNTY	SHEET NO.
AUS	WILLIAMSON	638

DATE:
FILE:

434

DISCLAIMER: The use of this standard is governed by the "Texas Engineering Practice Act". No warranty of any kind is made by TxDOT for any purpose whatsoever. TxDOT assumes no responsibility for the conversion of this standard to other formats or for incorrect results or damages resulting from its use.

ZONE 4 WITH ICE 70 M.P.H. WIND

TRUSS DETAILS

3/4" Dia. H.S. Bolts Spans 96' Thru 155'

SPAN	100'	105'	110'	115'	120'	125'	130'	135'
W x D = WIDTH x DEPTH	4.5 x 4.5	4.5 x 4.5	4.5 x 4.5	4.5 x 4.5	5.0 x 5.0	5.0 x 5.0	5.0 x 5.0	5.0 x 5.0
CHORD -②, Unless Otherwise Shown	L 3 1/2 x 3 1/2 x 3/8 [7]	L 3 1/2 x 3 1/2 x 7/16 [9]	L 4 x 4 x 3/8 [9]	L 4 x 4 x 3/8 [10]	L 4 x 4 x 3/8 [10]	L 4 x 4 x 7/16 [11]	L 4 x 4 x 1/2 [12]	L 4 x 4 x 1/2 [13]
DEAD LOAD DIAGONAL -③	L 3 x 2 x 3/16 [2]	L 3 x 2 1/2 x 3/16 [3]	L 3 x 3 x 3/16 [3]	L 3 x 3 x 3/16 [3]	L 3 x 3 x 3/16 [3]	L 3 x 2 x 1/4 [3]	L 3 x 2 x 1/4 [3]	L 3 x 2 1/2 x 1/4 [3]
WIND LOAD DIAGONAL -③	L 3 x 2 1/2 x 1/4 [2]	L 3 x 2 1/2 x 1/4 [2]	L 3 x 2 1/2 x 1/4 [2]	L 3 x 3 x 1/4 [2]	L 3 x 3 x 1/4 [2]	L 3 x 3 x 1/4 [2]	L 3 x 3 x 1/4 [2]	L 3 x 3 x 1/4 [3]
DEAD LOAD VERTICAL -③	L 3 x 2 x 3/16 [2]	L 3 x 2 x 3/16 [2]	L 3 x 2 x 3/16 [2]	L 3 x 2 x 3/16 [2]	L 3 x 2 1/2 x 3/16 [2]	L 3 x 2 1/2 x 3/16 [2]	L 3 x 2 1/2 x 3/16 [2]	L 3 x 3 x 3/16 [2]
WIND LOAD STRUT - ③	L 2 1/2 x 2 1/2 x 3/16 [1]	L 2 1/2 x 2 1/2 x 3/16 [1]	L 2 1/2 x 2 1/2 x 3/16 [1]	L 2 1/2 x 2 1/2 x 3/16 [1]	L 2 1/2 x 2 1/2 x 3/16 [1]	L 2 1/2 x 2 1/2 x 3/16 [1]	L 2 1/2 x 2 1/2 x 3/16 [1]	L 2 1/2 x 2 1/2 x 3/16 [1]
TOTAL DEFL. & TRUSS D.L.	DEFL=1.94" L=69 lb/ft	DEFL=2.14" L=76 lb/ft	DEFL=2.60" L=78 lb/ft	DEFL=3.02" L=78 lb/ft	DEFL=2.97" L=81 lb/ft	DEFL=3.16" L=88 lb/ft	DEFL=3.46" L=93 lb/ft	DEFL=3.91" L=97 lb/ft

TOWER DETAILS

S = COLUMN SPACING	7.0'	7.0'	7.0'	7.0'	7.0'	7.0'	7.0'	7.0'
TOWER HEIGHT (COLUMN SIZE & UPLIFT (kips))								
15'	W 10 x 22 (27.5)	W 10 x 22 (28.7)	W 10 x 22 (30.1)	W 10 x 22 (31.5)	W 10 x 22 (32.8)	W 10 x 26 (34.0)	W 10 x 26 (35.5)	W 10 x 26 (36.9)
16'	W 10 x 22 (29.5)	W 10 x 22 (30.8)	W 10 x 22 (32.3)	W 10 x 22 (33.7)	W 10 x 22 (35.1)	W 10 x 26 (36.4)	W 10 x 26 (38.1)	W 10 x 26 (39.5)
17'	W 10 x 22 (31.4)	W 10 x 22 (32.8)	W 10 x 22 (34.4)	W 10 x 22 (35.9)	W 10 x 26 (37.6)	W 10 x 26 (39.0)	W 10 x 26 (40.6)	W 10 x 26 (42.2)
18'	W 10 x 22 (33.4)	W 10 x 22 (34.9)	W 10 x 22 (36.6)	W 10 x 26 (38.2)	W 10 x 26 (40.0)	W 10 x 26 (41.5)	W 10 x 26 (43.2)	W 10 x 26 (44.8)
19'	W 10 x 22 (35.5)	W 10 x 26 (36.8)	W 10 x 26 (38.5)	W 10 x 26 (40.5)	W 10 x 26 (42.2)	W 12 x 26 (44.1)	W 12 x 26 (45.8)	W 12 x 26 (47.5)
20'	W 10 x 22 (37.3)	W 10 x 26 (38.8)	W 10 x 26 (40.7)	W 10 x 26 (42.7)	W 10 x 26 (44.5)	W 12 x 26 (46.6)	W 12 x 26 (48.3)	W 12 x 26 (50.2)
21'	W 10 x 26 (39.3)	W 10 x 26 (41.1)	W 12 x 26 (43.1)	W 12 x 26 (45.2)	W 12 x 26 (47.3)	W 12 x 26 (49.1)	W 12 x 26 (50.9)	W 12 x 26 (52.8)
22'	W 10 x 26 (41.3)	W 10 x 26 (43.2)	W 12 x 26 (45.3)	W 12 x 26 (47.5)	W 12 x 26 (49.7)	W 12 x 26 (51.6)	W 12 x 26 (53.5)	W 12 x 26 (55.5)
23'	W 12 x 26 (43.6)	W 12 x 26 (45.6)	W 12 x 26 (47.5)	W 12 x 26 (49.8)	W 12 x 26 (52.1)	W 12 x 26 (54.1)	W 14 x 30 (56.6)	W 14 x 30 (58.7)
24'	W 12 x 26 (45.6)	W 12 x 26 (47.7)	W 12 x 26 (49.7)	W 12 x 26 (52.1)	W 12 x 26 (54.5)	W 14 x 30 (56.6)	W 14 x 30 (59.2)	W 14 x 30 (61.5)
25'	W 12 x 26 (47.6)	W 12 x 26 (49.8)	W 12 x 26 (51.5)	W 14 x 30 (55.0)	W 14 x 30 (57.5)	W 14 x 30 (59.7)	W 14 x 30 (61.9)	W 14 x 30 (64.2)
26'	W 12 x 26 (49.7)	W 12 x 26 (52.0)	W 12 x 26 (53.7)	W 14 x 30 (57.4)	W 14 x 30 (59.7)	W 14 x 30 (62.2)	W 14 x 30 (64.6)	W 14 x 30 (67.0)
27'	W 12 x 26 (51.7)	W 14 x 30 (54.5)	W 14 x 30 (57.0)	W 14 x 30 (59.8)	W 14 x 30 (62.5)	W 14 x 34 (64.8)	W 14 x 34 (67.2)	W 14 x 34 (69.7)
28'	W 12 x 26 (53.8)	W 14 x 30 (56.7)	W 14 x 30 (59.3)	W 14 x 30 (62.2)	W 14 x 30 (64.9)	W 14 x 34 (67.4)	W 14 x 34 (69.9)	W 14 x 34 (72.5)
29'	W 14 x 30 (56.3)	W 14 x 30 (58.9)	W 14 x 30 (61.6)	W 14 x 34 (64.3)	W 14 x 34 (67.4)	W 14 x 34 (69.9)	W 14 x 34 (72.6)	W 16 x 36 (75.8)
30'	W 14 x 30 (58.4)	W 14 x 30 (61.1)	W 14 x 30 (63.9)	W 14 x 34 (66.7)	W 14 x 34 (69.9)	W 14 x 34 (72.5)	W 16 x 36 (75.3)	W 16 x 36 (78.6)

Tower Height = (HL + HR)/2

ZONE 4 WITH ICE 70 M.P.H. WIND

TRUSS DETAILS

3/4" Dia. H.S. Bolts Spans 96' Thru 155'

SPAN	140'	145'	150'	155'
W x D = WIDTH x DEPTH	5.0 x 5.0	5.0 x 5.0	5.0 x 5.0	5.0 x 5.0
CHORD -②, Unless Otherwise Shown	L 5 x 5 x 7/16 [14]	L 5 x 5 x 7/16 [15]	L 5 x 5 x 1/2 [16]	L 5 x 5 x 1/2 [18]
DEAD LOAD DIAGONAL -③	L 3 x 2 1/2 x 1/4 [3]	L 3 x 3 x 1/4 [3]	L 3 1/2 x 3 x 1/4 [4]	L 3 1/2 x 3 x 1/4 [4]
WIND LOAD DIAGONAL -③	L 3 x 3 x 1/4 [3]	L 3 x 3 x 1/4 [3]	L 3 1/2 x 3 1/2 x 1/4 [3]	L 3 1/2 x 3 1/2 x 1/4 [3]
DEAD LOAD VERTICAL -③	L 3 x 3 x 3/16 [2]	L 3 x 2 x 1/4 [3]	L 3 x 2 1/2 x 1/4 [3]	L 3 x 2 1/2 x 1/4 [3]
WIND LOAD STRUT - ③	L 2 1/2 x 2 1/2 x 3/16 [1]	L 2 1/2 x 2 1/2 x 3/16 [1]	L 2 1/2 x 2 1/2 x 3/16 [1]	L 2 1/2 x 2 1/2 x 3/16 [1]
TOTAL DEFL. & TRUSS D.L.	DEFL=4.49" L=103 lb/ft	DEFL=5.14" L=105 lb/ft	DEFL=5.23" L=118 lb/ft	DEFL=5.94" L=118 lb/ft

TOWER DETAILS

S = COLUMN SPACING	7.5'	7.5'	7.5'	7.5'
TOWER HEIGHT (COLUMN SIZE & UPLIFT (kips))				
15'	W 12 x 26 (35.0)	W 12 x 26 (36.4)	W 12 x 26 (37.3)	W 12 x 26 (38.8)
16'	W 12 x 26 (37.6)	W 12 x 26 (39.1)	W 12 x 26 (40.1)	W 12 x 26 (41.7)
17'	W 12 x 26 (40.1)	W 12 x 26 (41.7)	W 12 x 26 (42.8)	W 12 x 26 (44.5)
18'	W 12 x 26 (42.7)	W 12 x 26 (44.4)	W 12 x 26 (45.6)	W 12 x 26 (47.4)
19'	W 12 x 26 (45.3)	W 12 x 26 (47.1)	W 12 x 26 (48.4)	W 12 x 26 (50.3)
20'	W 12 x 26 (47.9)	W 12 x 26 (49.7)	W 12 x 26 (51.1)	W 14 x 30 (53.2)
21'	W 12 x 26 (50.5)	W 14 x 30 (52.8)	W 14 x 30 (54.3)	W 14 x 30 (56.5)
22'	W 14 x 30 (53.1)	W 14 x 30 (55.6)	W 14 x 30 (57.2)	W 14 x 30 (59.4)
23'	W 14 x 30 (56.2)	W 14 x 30 (58.3)	W 14 x 30 (60.0)	W 14 x 34 (62.3)
24'	W 14 x 30 (58.8)	W 14 x 30 (61.1)	W 14 x 30 (62.8)	W 14 x 34 (65.2)
25'	W 14 x 30 (60.9)	W 14 x 34 (63.8)	W 14 x 34 (65.7)	W 14 x 34 (68.2)
26'	W 14 x 30 (63.6)	W 14 x 34 (66.6)	W 14 x 34 (68.5)	W 14 x 34 (71.2)
27'	W 14 x 34 (66.8)	W 14 x 34 (69.3)	W 16 x 36 (72.1)	W 16 x 36 (74.8)
28'	W 14 x 34 (69.5)	W 16 x 36 (72.1)	W 16 x 36 (75.0)	W 16 x 36 (77.9)
29'	W 16 x 36 (72.9)	W 16 x 36 (75.7)	W 16 x 36 (77.9)	W 16 x 40 (80.9)
30'	W 16 x 36 (75.7)	W 16 x 36 (78.5)	W 16 x 36 (80.9)	W 16 x 40 (84.0)

Tower Height = (HL + HR)/2

KEY TO TRUSS AND TOWER DETAILS

Truss members are all angles.
Truss columns are all wide flange shapes.

W 10 x 26 (44.2) ← 44.2 kips Uplift at base plate
- 26 Pounds per foot.
- 10" Nominal size
- Wide Flange

DEFL = 0.12" = inches Deflection due to dead load of truss, walkway, signs and lights.
DL = 42 lb/ft = pounds per foot dead load of truss members only; does not include walkway, signs, and lights.

NOTE: Details on these sheets are for Design Wind Heights up to 30 feet.

GENERAL NOTES

Design conforms to AASHTO 1994 Standard Specifications for Structural Supports for Highway Signs, Luminaires, and Traffic Signals and Interim Revisions thereto.

For overhead sign bridges with different tower heights, average the height of the two towers and use the tabulated height nearest the calculated average. For average heights falling midway between the two tabulated heights use the larger height.

For truss lengths falling between those shown in the tables use the sizes called for in the next longer span.

Overhead sign bridges are designed for the equivalent area of a 10 foot deep sign panel over 75 percent of the span length, located as necessary to produce maximum stress. Design includes 3 pounds per square foot for sign panel, 20 pounds per linear foot for lights, and 50 pounds per linear foot for walkway, all placed as specified for the design sign panel.

Refer to "Overhead Sign Bridge Truss Details" for details called out in plan and elevation views.

The number of High Strength Bolts required in truss connection or splice are indicated in brackets, e.g. [3], after the member size.

SHEET 2 OF 2

Texas Department of Transportation
Traffic Operations Division

OVERHEAD SIGN BRIDGE DETAILS

OSB-Z4I

© TxDOT November 2007

DN: TXDOT	CK: TXDOT	DW: TXDOT	CK: TXDOT

REVISIONS
8/08 add missing HS bolt dia; applicability note; noted design specifications

CONT	SECT	JOB	HIGHWAY
0683	06	027	LP 1/SH 45
DIST		COUNTY	SHEET NO.
AUS		WILLIAMSON	639

DATE:
FILE:

43B

ZONE 4 WITH ICE 70 M.P.H. WIND

TRUSS DETAILS

5/8" Dia. H.S. Bolts — Spans 40' Thru 95'

SPAN	40'	45'	50'	55'	60'	65'	70'	75'
W x D = WIDTH x DEPTH	4.0 x 4.0	4.0 x 4.0	4.0 x 4.0	4.0 x 4.0	4.0 x 4.0	4.0 x 4.0	4.0 x 4.0	4.0 x 4.0
CHORD -②, Unless Otherwise Shown	L 3 x 3 x 3/16 ③ [4]	L 3 x 3 x 3/16 ③ [4]	L 3 x 3 x 3/16 ③ [4]	L 3 x 3 x 1/4 ③ [4]	L 3 x 3 x 1/4 [6]	L 3 x 3 x 5/16 [6]	L 3 x 3 x 5/16 [6]	L 3 x 3 x 5/16 [8]
DEAD LOAD DIAGONAL -③	L 2 x 2 x 3/16 [2]	L 2 x 2 x 3/16 [2]	L 2 x 2 x 3/16 [2]	L 2 x 2 x 3/16 [2]	L 2 x 2 x 3/16 [2]	L 2 x 2 x 3/16 [2]	L 2 x 2 x 3/16 [2]	L 2 x 2 x 3/16 [3]
WIND LOAD DIAGONAL -③	L 2 1/2 x 2 1/2 x 3/16 [2]	L 2 1/2 x 2 1/2 x 3/16 [2]	L 2 1/2 x 2 1/2 x 3/16 [2]	L 2 1/2 x 2 1/2 x 3/16 [2]	L 2 1/2 x 2 1/2 x 3/16 [2]	L 3 x 3 x 3/16 [2]	L 3 x 3 x 3/16 [2]	L 3 x 3 x 3/16 [2]
DEAD LOAD VERTICAL -③	L 2 x 2 x 3/16 [2]	L 2 x 2 x 3/16 [2]	L 2 x 2 x 3/16 [2]	L 2 x 2 x 3/16 [2]	L 2 x 2 x 3/16 [2]	L 2 x 2 x 3/16 [2]	L 2 x 2 x 3/16 [2]	L 2 x 2 x 3/16 [2]
WIND LOAD STRUT - ③	L 2 x 2 x 3/16 [1]	L 2 x 2 x 3/16 [1]	L 2 x 2 x 3/16 [1]	L 2 x 2 x 3/16 [1]	L 2 x 2 x 3/16 [1]	L 2 x 2 x 3/16 [1]	L 2 x 2 x 3/16 [1]	L 2 x 2 x 3/16 [1]
TOTAL DEFL. & TRUSS D.L.	DEFL=0.17" L=37 lb/ft	DEFL=0.25" L=38 lb/ft	DEFL=0.38" L=38 lb/ft	DEFL=0.36" L=43 lb/ft	DEFL=0.55" L=43 lb/ft	DEFL=0.58" L=50 lb/ft	DEFL=0.77" L=50 lb/ft	DEFL=0.99" L=50 lb/ft

TOWER DETAILS

S = COLUMN SPACING	6.0'	6.0'	6.0'	6.0'	6.0'	6.0'	6.5'	6.5'
TOWER HEIGHT (COLUMN SIZE & UPLIFT (Kips))								
25'	W 10 x 22 (27.2)	W 10 x 22 (30.2)	W 10 x 22 (33.1)	W 10 x 22 (36.0)	W 10 x 22 (39.0)	W 10 x 26 (41.8)	W 10 x 26 (41.0)	W 10 x 26 (43.7)
26'	W 10 x 22 (32.6)	W 10 x 22 (35.6)	W 10 x 22 (38.7)	W 10 x 26 (41.6)	W 10 x 26 (44.7)	W 10 x 26 (47.7)	W 12 x 26 (46.5)	W 12 x 26 (49.4)
27'	W 10 x 22 (34.1)	W 10 x 22 (37.3)	W 10 x 26 (40.4)	W 10 x 26 (43.5)	W 10 x 26 (46.7)	W 12 x 26 (49.8)	W 12 x 26 (48.6)	W 12 x 26 (51.9)
28'	W 10 x 22 (35.7)	W 10 x 26 (38.9)	W 10 x 26 (42.2)	W 10 x 26 (45.4)	W 12 x 26 (48.7)	W 12 x 26 (52.0)	W 12 x 26 (50.7)	W 12 x 26 (53.8)
29'	W 10 x 26 (37.2)	W 10 x 26 (40.6)	W 10 x 26 (44.0)	W 12 x 26 (47.3)	W 12 x 26 (50.8)	W 12 x 26 (54.2)	W 12 x 26 (52.8)	W 12 x 26 (56.0)
30'	W 10 x 26 (33.8)	W 10 x 26 (42.3)	W 12 x 26 (45.8)	W 12 x 26 (49.3)	W 12 x 26 (52.8)	W 12 x 26 (56.3)	W 12 x 26 (54.9)	W 14 x 30 (58.1)
31'	W 10 x 26 (40.4)	W 12 x 26 (44.0)	W 12 x 26 (47.7)	W 12 x 26 (51.3)	W 12 x 26 (54.9)	W 14 x 30 (58.5)	W 14 x 30 (57.0)	W 14 x 30 (60.4)
32'	W 10 x 26 (42.0)	W 12 x 26 (45.8)	W 12 x 26 (49.5)	W 12 x 26 (53.2)	W 12 x 26 (57.0)	W 14 x 30 (60.7)	W 14 x 30 (59.1)	W 14 x 30 (62.6)
33'	W 12 x 26 (43.7)	W 12 x 26 (47.6)	W 12 x 26 (51.4)	W 12 x 26 (55.2)	W 14 x 30 (59.0)	W 14 x 30 (62.9)	W 14 x 30 (61.3)	W 14 x 34 (64.7)
34'	W 12 x 26 (45.4)	W 12 x 26 (49.3)	W 12 x 26 (53.3)	W 14 x 30 (57.2)	W 14 x 30 (61.2)	W 14 x 30 (65.2)	W 14 x 34 (63.3)	W 14 x 34 (67.0)
35'	W 12 x 26 (47.0)	W 12 x 26 (51.2)	W 14 x 30 (55.2)	W 14 x 30 (59.2)	W 14 x 30 (63.3)	W 14 x 34 (67.2)	W 14 x 34 (65.5)	W 14 x 34 (69.3)
36'	W 12 x 26 (48.8)	W 14 x 30 (52.9)	W 14 x 30 (57.1)	W 14 x 30 (61.3)	W 14 x 34 (65.3)	W 14 x 34 (69.5)	W 14 x 34 (67.7)	W 14 x 34 (71.7)
37'	W 12 x 26 (50.5)	W 14 x 30 (54.7)	W 14 x 30 (59.0)	W 14 x 34 (63.1)	W 14 x 34 (67.5)	W 14 x 34 (71.8)	W 14 x 34 (69.9)	W 16 x 36 (73.8)
38'	W 14 x 30 (52.1)	W 14 x 30 (56.6)	W 14 x 30 (61.0)	W 14 x 34 (65.2)	W 14 x 34 (69.7)	W 14 x 34 (74.1)	W 16 x 36 (72.0)	W 16 x 36 (76.2)
39'	W 14 x 30 (53.9)	W 14 x 30 (58.4)	W 14 x 34 (62.8)	W 14 x 34 (67.3)	W 14 x 34 (71.9)	W 16 x 36 (76.3)	W 16 x 36 (74.3)	W 16 x 36 (78.5)
40'	W 14 x 30 (55.6)	W 14 x 34 (60.1)	W 14 x 34 (64.8)	W 14 x 34 (69.4)	W 16 x 36 (73.9)	W 16 x 36 (78.6)	W 16 x 36 (76.5)	W 16 x 36 (80.9)
42'	W 14 x 34 (59.0)	W 14 x 34 (63.9)	W 14 x 34 (68.9)	W 16 x 36 (73.5)	W 16 x 36 (78.5)	W 16 x 36 (83.4)	W 16 x 40 (80.6)	W 16 x 40 (85.2)
45'	W 14 x 34 (64.5)	W 16 x 36 (69.6)	W 16 x 36 (74.8)	W 16 x 36 (80.1)	W 16 x 40 (84.9)	W 16 x 40 (90.1)	W 16 x 40 (87.6)	W 18 x 46 (92.4)

Tower Height = (HL + HR)/2

ZONE 4 WITH ICE 70 M.P.H. WIND

TRUSS DETAILS

5/8" Dia. H.S. Bolts — Spans 40' Thru 95'

SPAN	80'	85'	90'	95'
W x D = WIDTH x DEPTH	4.0 x 4.0	4.0 x 4.0	4.0 x 4.0	4.0 x 4.0
CHORD -②, Unless Otherwise Shown	L 3 x 3 x 3/8 [9]	L 3 x 3 x 7/16 [10]	L 3 1/2 x 3 1/2 x 3/8 [11]	L 3 1/2 x 3 1/2 x 3/8 [11]
DEAD LOAD DIAGONAL -③	L 2 1/2 x 2 1/2 x 3/16 [3]	L 3 x 2 x 3/16 [3]	L 3 x 2 x 3/16 [3]	L 3 x 2 x 3/16 [3]
WIND LOAD DIAGONAL -③	L 3 x 3 x 3/16 [2]	L 3 x 3 x 3/16 [2]	L 3 x 2 1/2 x 1/4 [3]	L 3 x 2 1/2 x 1/4 [3]
DEAD LOAD VERTICAL -③	L 2 x 2 x 3/16 [2]	L 3 x 2 x 3/16 [2]	L 3 x 2 x 3/16 [2]	L 3 x 2 x 3/16 [2]
WIND LOAD STRUT - ③	L 2 x 2 x 3/16 [1]	L 2 x 2 x 3/16 [1]	L 2 x 2 x 3/16 [1]	L 2 x 2 x 3/16 [1]
TOTAL DEFL. & TRUSS D.L.	DEFL=1.11" L=56 lb/ft	DEFL=1.29" L=62 lb/ft	DEFL=1.60" L=65 lb/ft	DEFL=1.95" L=65 lb/ft

TOWER DETAILS

S = COLUMN SPACING	6.5'	6.5'	6.5'	6.5'
TOWER HEIGHT (COLUMN SIZE & UPLIFT (Kips))				
25'	W 12 x 26 (46.4)	W 12 x 26 (49.0)	W 12 x 26 (51.7)	W 12 x 26 (54.5)
26'	W 12 x 26 (52.2)	W 12 x 26 (54.9)	W 12 x 26 (57.7)	W 14 x 30 (60.5)
27'	W 12 x 26 (54.4)	W 12 x 26 (57.3)	W 14 x 30 (60.2)	W 14 x 30 (63.2)
28'	W 12 x 26 (56.7)	W 14 x 30 (59.7)	W 14 x 30 (62.7)	W 14 x 30 (65.8)
29'	W 14 x 30 (59.0)	W 14 x 30 (62.1)	W 14 x 30 (65.2)	W 14 x 34 (68.3)
30'	W 14 x 30 (61.3)	W 14 x 30 (64.6)	W 14 x 34 (67.6)	W 14 x 34 (71.0)
31'	W 14 x 30 (63.7)	W 14 x 34 (66.9)	W 14 x 34 (70.2)	W 14 x 34 (73.6)
32'	W 14 x 34 (65.7)	W 14 x 34 (69.4)	W 14 x 34 (72.9)	W 14 x 34 (76.3)
33'	W 14 x 34 (68.1)	W 14 x 34 (71.8)	W 14 x 34 (75.4)	W 16 x 36 (78.9)
34'	W 14 x 34 (70.5)	W 14 x 34 (74.4)	W 16 x 36 (77.8)	W 16 x 36 (81.6)
35'	W 14 x 34 (72.9)	W 16 x 36 (76.7)	W 16 x 36 (80.5)	W 16 x 36 (84.4)
36'	W 16 x 36 (75.3)	W 16 x 36 (79.2)	W 16 x 36 (83.1)	W 16 x 36 (87.1)
37'	W 16 x 36 (77.8)	W 16 x 36 (81.8)	W 16 x 36 (85.8)	W 16 x 40 (89.5)
38'	W 16 x 36 (80.3)	W 16 x 36 (84.4)	W 16 x 40 (88.1)	W 16 x 40 (92.3)
39'	W 16 x 36 (82.7)	W 16 x 40 (86.8)	W 16 x 40 (90.8)	W 16 x 40 (95.1)
40'	W 16 x 40 (84.8)	W 16 x 40 (89.1)	W 16 x 40 (93.4)	W 16 x 40 (97.7)
42'	W 16 x 40 (89.7)	W 16 x 40 (93.9)	W 18 x 46 (98.7)	W 18 x 46 (103.4)
45'	W 18 x 46 (97.2)	W 18 x 46 (101.9)	W 18 x 46 (107.0)	W 18 x 50 (112.0)

Tower Height = (HL + HR)/2

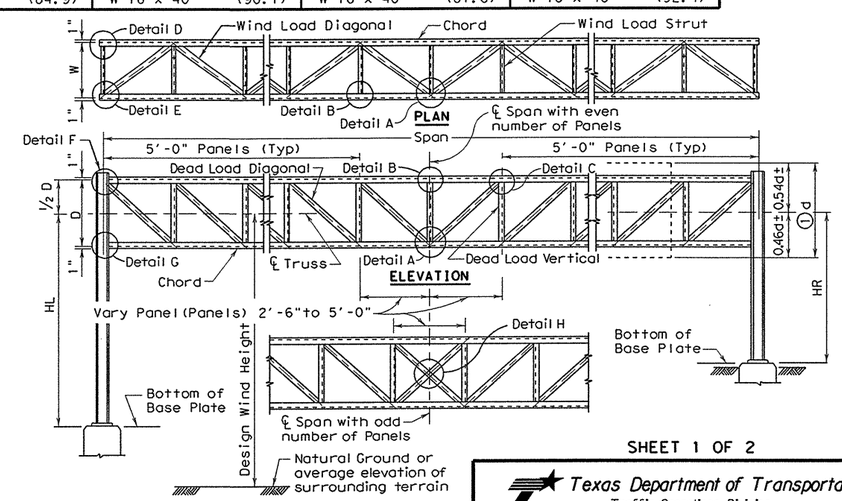

① d = Sign Depth
Where signs of different depths are used, the bottom edges of all signs may be placed in line. Where this is done, all signs should be so positioned that the bottom edges are approximately 0.46 of the depth of the deepest sign below the ℄ of the truss.

② "Low-Alloy Steel" for non-bridge structures per Item 442, "Metal For Structures".

③ "Carbon Steel" for non-bridge structures per Item 442, "Metal For Structures".

SHEET 1 OF 2

Texas Department of Transportation
Traffic Operations Division

HIGH LEVEL OVERHEAD SIGN BRIDGE DETAILS

HOSB-Z4I

FILE: hosb-z4i.dgn	DN: TxDOT	CK: TxDOT	DW: TxDOT	CK: TxDOT
©TxDOT November 2007	DISTRICT	FEDERAL AID PROJECT		SHEET
REVISIONS 8/08 = of HS bolts	AUSTIN			640
	COUNTY		CONTROL-SECT-JOB	HIGHWAY
	WILLIAMSON		0683-06-027	SH 45 LOOP 1

44A

DISCLAIMER:
The use of this standard is governed by the "Texas Engineering Practice Act". Use of this document for any purpose whatsoever is made by owners only. TxDOT assumes no responsibility for conversion of this standard to other formats or for incorrect results or damages resulting from its use.

PATH:

LEVELS DIS.

ZONE 4 WITH ICE 70 M.P.H. WIND

TRUSS DETAILS

¾" Dia. H.S. Bolts — Spans 96' Thru 155'

SPAN	100'	105'	110'	115'	120'	125'	130'	135'
W x D = WIDTH x DEPTH	4.5 x 4.5	4.5 x 4.5	4.5 x 4.5	4.5 x 4.5	5.0 x 5.0	5.0 x 5.0	5.0 x 5.0	5.0 x 5.0
CHORD -②, Unless Otherwise Shown	L 3 ½x 3 ½x ⅜ [7]	L 3 ½x 3 ½x 7/16 [9]	L 4 x 4 x ⅜ [9]	L 4 x 4 x 7/16 [10]	L 4 x 4 x 7/16 [10]	L 4 x 4 x 7/16 [11]	L 4 x 4 x ½ [12]	L 5 x 5 x 7/16 [13]
DEAD LOAD DIAGONAL -③	L 3 x 2 x 3/16 [2]	L 3 x 2 ½x 3/16 [3]	L 3 x 3 x 3/16 [3]	L 3 x 3 x 3/16 [3]	L 3 x 3 x 3/16 [3]	L 3 x 2 x ¼ [3]	L 3 x 2 x ¼ [3]	L 3 x 2 ½x ¼ [3]
WIND LOAD DIAGONAL -③	L 3 x 2 ½x ¼ [2]	L 3 x 3 x ¼ [2]	L 3 x 3 x ¼ [2]	L 3 x 3 x ¼ [2]	L 3 x 3 x ¼ [2]	L 3 x 3 x ¼ [2]	L 3 x 3 x ¼ [2]	L 3 x 3 x ¼ [3]
DEAD LOAD VERTICAL -③	L 3 x 2 x 3/16 [2]	L 3 x 2 x 3/16 [2]	L 3 x 2 x 3/16 [2]	L 3 x 2 x 3/16 [2]	L 3 x 2 ½x 3/16 [2]	L 3 x 2 ½x 3/16 [2]	L 3 x 2 ½x 3/16 [2]	L 3 x 3 x 3/16 [2]
WIND LOAD STRUT - ③	L 2 ½x 2 ½x 3/16 [1]	L 2 ½x 2 ½x 3/16 [1]	L 2 ½x 2 ½x 3/16 [1]	L 2 ½x 2 ½x 3/16 [1]	L 2 ½x 2 ½x 3/16 [1]	L 2 ½x 2 ½x 3/16 [1]	L 2 ½x 2 ½x 3/16 [1]	L 2 ½x 2 ½x 3/16 [1]
TOTAL DEFL. & TRUSS D.L.	DEFL=1.96" L=69 lb/ft	DEFL=2.16" L=77 lb/ft	DEFL=2.59" L=78 lb/ft	DEFL=2.78" L=83 lb/ft	DEFL=2.73" L=86 lb/ft	DEFL=3.14" L=87 lb/ft	DEFL=3.35" L=92 lb/ft	DEFL=3.90" L=102 lb/ft

TOWER DETAILS

S = COLUMN SPACING	7.0'	7.0'	7.0'	7.0'	7.0'	7.0'	7.0'	7.0'
TOWER HEIGHT (Tower Height = (HL + HR)/2) — COLUMN SIZE & UPLIFT (kips)								
25'	W 14 x 30 (56.3)	W 14 x 30 (58.6)	W 14 x 30 (61.4)	W 14 x 30 (63.8)	W 14 x 34 (66.3)	W 14 x 34 (68.9)	W 14 x 34 (71.3)	W 14 x 34 (73.6)
26'	W 14 x 30 (58.8)	W 14 x 30 (61.2)	W 14 x 30 (64.1)	W 14 x 34 (66.5)	W 14 x 34 (69.3)	W 14 x 34 (71.9)	W 14 x 34 (74.5)	W 14 x 34 (76.9)
27'	W 14 x 30 (61.3)	W 14 x 30 (63.9)	W 14 x 34 (66.7)	W 14 x 34 (69.3)	W 14 x 34 (72.2)	W 14 x 34 (75.0)	W 14 x 34 (77.6)	W 16 x 36 (80.0)
28'	W 14 x 30 (63.9)	W 14 x 34 (66.4)	W 14 x 34 (69.4)	W 14 x 34 (72.2)	W 14 x 34 (75.2)	W 14 x 34 (78.1)	W 16 x 36 (80.7)	W 16 x 36 (83.3)
29'	W 14 x 34 (66.4)	W 14 x 34 (69.1)	W 14 x 34 (72.2)	W 14 x 34 (75.1)	W 16 x 36 (78.0)	W 16 x 36 (80.8)	W 16 x 36 (83.9)	W 16 x 36 (86.6)
30'	W 14 x 34 (69.0)	W 14 x 34 (71.7)	W 14 x 34 (75.0)	W 16 x 36 (77.8)	W 16 x 36 (81.0)	W 16 x 36 (83.9)	W 16 x 36 (87.1)	W 16 x 40 (89.5)
31'	W 14 x 34 (71.6)	W 14 x 34 (74.4)	W 16 x 36 (77.7)	W 16 x 36 (80.7)	W 16 x 36 (84.0)	W 16 x 36 (87.1)	W 16 x 40 (90.0)	W 16 x 40 (92.9)
32'	W 14 x 34 (74.3)	W 16 x 36 (77.0)	W 16 x 36 (80.5)	W 16 x 36 (83.7)	W 16 x 36 (87.1)	W 16 x 40 (90.0)	W 16 x 40 (93.2)	W 16 x 40 (96.2)
33'	W 16 x 36 (76.7)	W 16 x 36 (79.7)	W 16 x 36 (83.3)	W 16 x 36 (86.6)	W 16 x 40 (89.8)	W 16 x 40 (93.2)	W 16 x 40 (96.5)	W 18 x 46 (99.4)
34'	W 16 x 36 (79.4)	W 16 x 36 (82.5)	W 16 x 40 (85.8)	W 16 x 40 (89.2)	W 16 x 40 (92.8)	W 16 x 40 (96.3)	W 18 x 46 (99.5)	W 18 x 46 (102.8)
35'	W 16 x 36 (82.0)	W 16 x 40 (84.9)	W 16 x 40 (88.6)	W 16 x 40 (92.1)	W 16 x 40 (95.9)	W 18 x 46 (99.8)	W 18 x 46 (102.8)	W 18 x 46 (106.2)
36'	W 16 x 40 (84.3)	W 16 x 40 (87.6)	W 16 x 40 (91.5)	W 16 x 40 (95.1)	W 18 x 46 (98.8)	W 18 x 46 (103.0)	W 18 x 46 (106.1)	W 18 x 46 (109.5)
37'	W 16 x 40 (87.0)	W 16 x 40 (90.4)	W 16 x 40 (94.2)	W 18 x 46 (97.9)	W 18 x 46 (101.9)	W 18 x 46 (106.2)	W 18 x 46 (109.4)	W 18 x 46 (113.0)
38'	W 16 x 40 (89.7)	W 18 x 46 (93.0)	W 18 x 46 (97.1)	W 18 x 46 (100.9)	W 18 x 46 (105.0)	W 18 x 46 (109.4)	W 18 x 46 (112.7)	W 18 x 50 (116.2)
39'	W 18 x 46 (92.2)	W 18 x 46 (95.8)	W 18 x 46 (100.0)	W 18 x 46 (103.9)	W 18 x 46 (108.1)	W 18 x 50 (111.9)	W 18 x 50 (115.9)	W 18 x 50 (119.6)
40'	W 18 x 46 (94.9)	W 18 x 46 (98.6)	W 18 x 46 (102.9)	W 18 x 46 (106.9)	W 18 x 46 (111.2)	W 18 x 50 (115.2)	W 18 x 50 (119.2)	W 18 x 50 (123.1)
42'	W 18 x 46 (97.6)	W 18 x 46 (104.3)	W 18 x 46 (108.8)	W 18 x 50 (112.8)	W 18 x 50 (117.3)	W 18 x 50 (121.7)	W 18 x 55 (125.7)	W 18 x 55 (129.8)
45'	W 18 x 50 (108.5)	W 18 x 50 (112.7)	W 18 x 50 (117.5)	W 18 x 55 (121.8)	W 18 x 55 (126.7)	W 21 x 57 (130.9)	W 21 x 57 (135.5)	W 21 x 57 (139.8)

ZONE 4 WITH ICE 70 M.P.H. WIND

TRUSS DETAILS

¾" Dia. H.S. Bolts — Spans 96' Thru 155'

SPAN	140'	145'	150'	155'
W x D = WIDTH x DEPTH	5.0 x 5.0	5.0 x 5.0	5.0 x 5.0	5.0 x 5.0
CHORD -②, Unless Otherwise Shown	L 5 x 5 x 7/16 [14]	L 5 x 5 x ½ [15]	L 5 x 5 x ½ [16]	L 5 x 5 x ½ [18]
DEAD LOAD DIAGONAL -③	L 3 x 2 ½x ¼ [3]	L 3 x 3 x ¼ [3]	L 3 ½x 3 x ¼ [4]	L 3 ½x 3 x ¼ [4]
WIND LOAD DIAGONAL -③	L 3 ½x 3 x ¼ [3]	L 3 ½x 3 ½x ¼ [3]	L 3 ½x 3 ½x ¼ [3]	L 3 ½x 3 ½x ¼ [3]
DEAD LOAD VERTICAL -③	L 3 x 2 x ¼ [2]	L 3 x 2 ½x ¼ [3]	L 3 x 2 ½x ¼ [3]	L 3 x 2 ½x ¼ [3]
WIND LOAD STRUT - ③	L 2 ½x 2 ½x 3/16 [1]	L 2 ½x 2 ½x 3/16 [1]	L 2 ½x 2 ½x 3/16 [1]	L 2 ½x 2 ½x 3/16 [1]
TOTAL DEFL. & TRUSS D.L.	DEFL=4.51" L=105 lb/ft	DEFL=4.55" L=117 lb/ft	DEFL=5.23" L=118 lb/ft	DEFL=5.26" L=118 lb/ft

TOWER DETAILS

S = COLUMN SPACING	7.5'	7.5'	7.5'	7.5'
TOWER HEIGHT (Tower Height = (HL + HR)/2) — COLUMN SIZE & UPLIFT (kips)				
25'	W 14 x 34 (70.5)	W 14 x 34 (72.7)	W 16 x 36 (75.1)	W 16 x 36 (77.7)
26'	W 14 x 34 (73.7)	W 16 x 36 (75.9)	W 16 x 36 (78.4)	W 16 x 36 (81.2)
27'	W 16 x 36 (76.7)	W 16 x 36 (79.0)	W 16 x 36 (81.8)	W 16 x 36 (84.6)
28'	W 16 x 36 (79.8)	W 16 x 36 (82.3)	W 16 x 40 (84.9)	W 16 x 40 (87.8)
29'	W 16 x 36 (83.0)	W 16 x 40 (85.3)	W 16 x 40 (88.2)	W 16 x 40 (91.3)
30'	W 16 x 40 (85.9)	W 16 x 40 (88.6)	W 16 x 40 (91.6)	W 16 x 40 (94.8)
31'	W 16 x 40 (89.1)	W 16 x 40 (91.9)	W 18 x 46 (94.9)	W 18 x 46 (98.2)
32'	W 16 x 40 (92.3)	W 18 x 46 (94.8)	W 18 x 46 (98.3)	W 18 x 46 (101.7)
33'	W 18 x 46 (95.3)	W 18 x 46 (98.2)	W 18 x 46 (101.8)	W 18 x 46 (105.2)
34'	W 18 x 46 (98.6)	W 18 x 46 (101.5)	W 18 x 46 (105.2)	W 18 x 46 (108.8)
35'	W 18 x 46 (101.8)	W 18 x 46 (104.9)	W 18 x 46 (108.7)	W 18 x 50 (112.2)
36'	W 18 x 46 (105.1)	W 18 x 46 (108.2)	W 18 x 50 (112.0)	W 18 x 50 (115.7)
37'	W 18 x 46 (108.4)	W 18 x 50 (111.6)	W 18 x 50 (115.4)	W 18 x 50 (119.3)
38'	W 18 x 50 (111.5)	W 18 x 50 (115.0)	W 18 x 50 (118.9)	W 18 x 55 (122.7)
39'	W 18 x 50 (114.8)	W 18 x 50 (118.4)	W 18 x 55 (122.3)	W 18 x 55 (126.4)
40'	W 18 x 50 (118.1)	W 18 x 55 (121.6)	W 18 x 55 (125.8)	W 18 x 55 (130.0)
42'	W 18 x 55 (124.5)	W 18 x 55 (128.5)	W 21 x 57 (132.5)	W 21 x 57 (136.9)
45'	W 21 x 57 (134.2)	W 21 x 57 (138.5)	W 21 x 62 (143.0)	W 21 x 62 (147.7)

KEY TO TRUSS AND TOWER DETAILS

Truss members are all angles.
Truss columns are all wide flange shapes.

W 10 x 26 (44.2) ← 44.2 kips Uplift at base plate
- 26 Pounds per foot.
- 10" Nominal size
- Wide Flange

DEFL = 0.12" = inches Deflection due to dead load of truss, walkway, signs and lights.
DL = 42 lb/ft = pounds per foot dead load of truss members only; does not include walkway, signs, and lights.

NOTE: Details on these sheets are for Design Wind Heights between 30 feet and 50 feet.

GENERAL NOTES

Design conforms to AASHTO 1994 Standard Specifications for Structural Supports for Highway Signs, Luminaires, and Traffic Signals and Interim Revisions thereto.

For overhead sign bridges with different tower heights, average the height of the two towers and use the tabulated height nearest the calculated average. For average heights falling midway between the two tabulated heights use the larger height.

For truss lengths falling between those shown in the tables use the sizes called for in the next longer span.

Overhead sign bridges are designed for the equivalent area of a 10 foot deep sign panel over 75 percent of the span length, located as necessary to produce maximum stress. Design includes 3 pounds per square foot for sign panel, 20 pounds per linear foot for lights, and 50 pounds per linear foot for walkway, all placed as specified for the design sign panel.

Refer to "Overhead Sign Bridge Truss Details" for details called out in plan and elevation views.

The number of High Strength Bolts required in truss connection or splice are indicated in brackets, e.g. [3], after the member size.

SHEET 2 OF 2

Texas Department of Transportation
Traffic Operations Division

HIGH LEVEL OVERHEAD SIGN BRIDGE DETAILS

HOSB-Z41

FILE: hosb-z41.dgn	DN: TxDOT	CK: TxDOT	DW: TxDOT	CK: TxDOT
©TxDOT November 2007	DISTRICT	FEDERAL AID PROJECT		SHEET
REVISIONS 8/08 add missing HS bolt dia (select spans); applicability note; noted design specifications	AUSTIN			641
	COUNTY		CONTROL-SECT-JOB	HIGHWAY
	WILLIAMSON		0683-06-027	SH 45, LOOP 1

448

DISCLAIMER: The use of this standard is governed by the "Texas Engineering Practice Act". No warranty of any kind is made by TxDOT for any purpose whatsoever. TxDOT assumes no responsibility for the conversion of this standard to other formats or for incorrect results or damages resulting from its use.

PATH:
LEVELS DIS

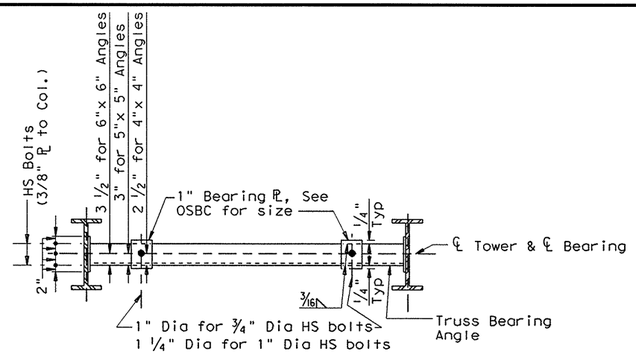

PLAN AT TRUSS BEARING ANGLE

COLUMN SPA. "S"	TRUSS BEARING ANGLE	HS BOLTS (DIA)
6'-0"	L 4 x 4 x 5/16	5/8"
6'-6"	L 5 x 5 x 3/8	5/8"
7'-0"	L 5 x 5 x 1/2	3/4"
7'-6" to 8'-6"	L 6 x 6 x 5/8	3/4"
9'-0"	L 6 x 6 x 3/4	3/4"
9'-6"	L 6 x 6 x 7/8	3/4"

(2) Nominal Dia. x 1 1/2" slots in plate. (Top ℞ only) Use washer on plate side of HS bolt. (See table above for size of bolts.)

GENERAL NOTES:

Design conforms to 1994 AASHTO Standard Specifications for Structural Supports for Highway Signs, Luminaires and Traffic Signals and Interim revisions thereto for design heights up to 50 feet.

For size and spacing of columns see sheets, "Overhead Sign Bridge Details."

At contractor's option tower bracing connections may be high strength (HS) bolted or welded. If welded connections are used, length of connection shall be taken from the table shown on sheet, "Overhead Sign Bridge Truss Details-OSBC."

All connection bolts shall conform to ASTM A325 Type 1. Washers shall conform to ASTM F436. Bolts, nuts and washers shall be galvanized per Item 445, "Galvanizing".

All structural steel shall conform to ASTM A36 except where noted. Structural steel shall be galvanized after fabrication per Item 445, "Galvanizing".

Anchor bolts and nuts for anchor bolts shall be "Alloy steel" per Item 449, "Anchor Bolts".

Anchor bolts shall be rigidly held in position during concrete placement by using steel templates at the top and bottom. The bottom template and anchor plate assembly shall remain in place and shall not be damaged during concrete placement. The top template shall be removed after concrete has set.

Exposed nuts and washers shall be galvanized in accordance with Item 449, "Galvanizing". Embedded nuts and top and bottom templates need not be galvanized.

Lubricate and tighten the anchor bolts when erecting the structure per Item 449, "Anchor Bolts". After the structure has been aligned in its final position and the anchor bolts have been properly tightened, tack weld anchor bolt nuts to washers, and tack weld washers to base plates. Galvanizing in tack welded areas shall be repaired per Item 445, "Galvanizing".

Concrete shall be Class "C".

SPECIAL NOTE FOR TOWER BRACING

Normally, the maximum spacing for tower bracing is the same as column spacing; However, this spacing may be increased as follows:

Determine required column size and spacing to satisfy height for the wind zone and truss span being used. Height=$(H_L + H_R)/2$.

Note the number of times this column size is shown for larger heights for the same span and wind zone.

Spacing of bracing may be increased 1'-0" for each time height is shown, except the increase shall not exceed 5'-0".

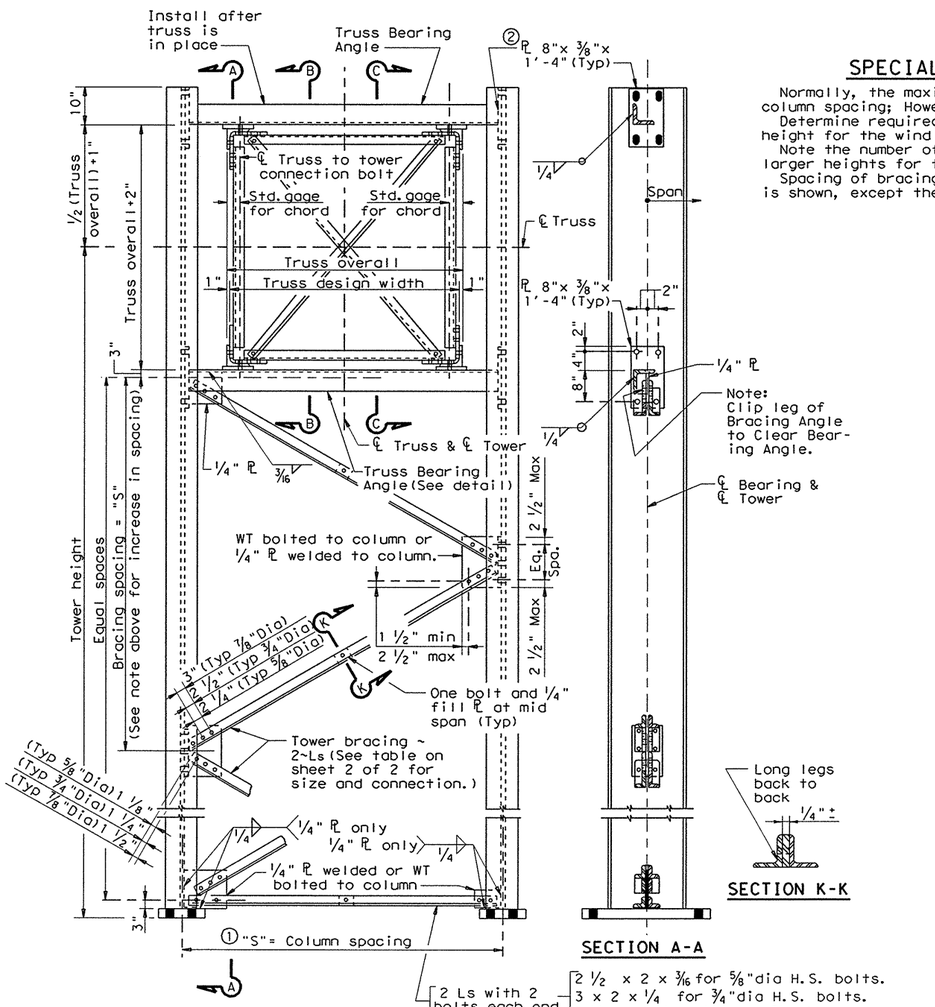

TRUSS DETAILS

(1) For column spacing see standard drawing, "Overhead Sign Bridge Details"

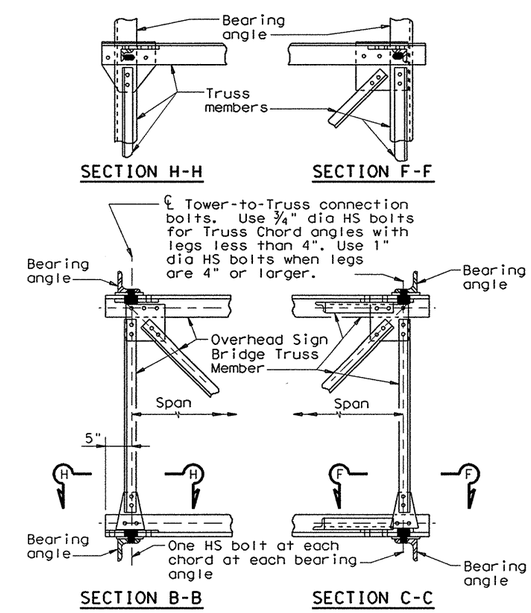

TRUSS-TO-TOWER CONNECTION DETAILS

DISCLAIMER:
The use of this standard is governed by the "Texas Engineering Practice Act". No warranty of any kind is made by TxDOT for any purpose whatsoever. TxDOT assumes no responsibility for the conversion of this standard to other formats or for incorrect results or damages resulting from its use.

PATH:

LEVELS DTS-...D

SHEET 1 OF 2

Texas Department of Transportation
Traffic Operations Division

OVERHEAD SIGN BRIDGE TOWER DETAILS

OSBT

FILE: osbt.dgn	DN: TxDOT	CK: TxDOT	DW: TxDOT	CK: TxDOT
© TxDOT November 2007	DISTRICT	FEDERAL AID PROJECT		SHEET
REVISIONS	AUSTIN			642
	COUNTY		CONTROL-SECT-JOB	HIGHWAY
	WILLIAMSON		0683-06-027	SH 45 LOOP 1

45A

BRACING FOR 9'-0" TO 9'-6" COLUMN SPACING				
SIZE DOUBLE ANGLES	BOLTS REQUIRED			
	BRACING		WT to W	
	3/4"	7/8"	3/4"	7/8"
2 Ls 4 x 4 x 5/16	6	4	10	8
2 Ls 4 x 4 x 5/16	6	4	10	8
2 Ls 4 x 4 x 5/16	6	4	10	8
2 Ls 4 x 4 x 5/16	6	4	10	8
2 Ls 4 x 3 1/2 x 5/16	5	4	10	8
2 Ls 4 x 3 1/2 x 5/16	5	4	10	8
2 Ls 4 x 3 1/2 x 5/16	5	4	10	8
2 Ls 4 x 3 x 5/16	5	4	10	8
2 Ls 4 x 3 x 5/16	5	4	10	8
2 Ls 4 x 3 x 5/16	5	4	10	8
2 Ls 4 x 3 x 5/16	5	4	10	8

BRACING FOR 8'-0" TO 8'-6" COLUMN SPACING.				
SIZE DOUBLE ANGLES	BOLTS REQUIRED			
	BRACING		WT to W	
	3/4"	7/8"	3/4"	7/8"
2 Ls 4 x 3 x 5/16	5	4	10	8
2 Ls 4 x 3 x 5/16	5	4	10	8
2 Ls 4 x 3 x 5/16	5	4	10	8
2 Ls 4 x 3 x 5/16	5	4	10	8
2 Ls 3 1/2 x 3 x 5/16	5	4	8	6
2 Ls 3 1/2 x 3 x 5/16	5	4	8	6
2 Ls 3 1/2 x 3 x 5/16	5	4	8	6
2 Ls 3 1/2 x 3 x 5/16	5	4	8	6
2 Ls 4 x 3 x 1/4	4	3	8	6
2 Ls 4 x 3 x 1/4	4	3	8	6
2 Ls 4 x 3 x 1/4	4	3	8	6
2 Ls 3 1/2 x 3 x 1/4	4	3	8	6
2 Ls 3 1/2 x 3 x 1/4	4	3	8	6

BRACING FOR 7'-0" TO 7'-6" COLUMN SPACING.						
SIZE DOUBLE ANGLES	BOLTS REQUIRED					
	BRACING			WT to W		
	5/8"	3/4"	7/8"	5/8"	3/4"	7/8"
2 Ls 4 x 3 x 5/16	7	5	4	12	10	8
2 Ls 4 x 3 x 5/16	7	5	4	12	10	8
2 Ls 3 1/2 x 3 x 5/16	6	5	4	12	8	6
2 Ls 3 1/2 x 3 x 1/4	6	4	3	10	8	6
2 Ls 3 1/2 x 3 x 1/4	6	4	3	10	8	6
2 Ls 3 1/2 x 3 x 1/4	6	4	3	10	8	6
2 Ls 3 1/2 x 3 x 1/4	6	4	3	10	8	6
2 Ls 3 1/2 x 3 x 1/4	5	4	3	10	6	4
2 Ls 3 1/2 x 2 1/2 x 1/4	5	4	3	8	6	4
2 Ls 3 1/2 x 2 1/2 x 1/4	4	3	~	8	6	4
2 Ls 3 x 2 1/2 x 1/4	4	3	~	8	6	4
2 Ls 3 x 2 1/2 x 1/4	4	3	~	8	6	4
2 Ls 3 x 2 1/2 x 1/4	3	2	~	6	4	4
2 Ls 3 x 3 x 3/16	2	2	~	4	4	4
2 Ls 3 x 3 x 3/16	2	2	~	4	4	4
2 Ls 2 1/2 x 2 1/2 x 3/16	2	~	~	4	4	4
2 Ls 2 1/2 x 2 x 3/16	2	~	~	4	4	4

BRACING FOR 6'-0" TO 6'-6" COLUMN SPACING.				
SIZE DOUBLE ANGLES	BOLTS REQUIRED			
	BRACING		WT to W	
	5/8"	3/4"	5/8"	3/4"
2 Ls 3 x 3 x 1/4	4	3	8	6
2 Ls 3 x 3 x 1/4	4	3	8	6
2 Ls 3 x 2 1/2 x 1/4	4	3	8	6
2 Ls 3 x 2 1/2 x 1/4	4	3	6	4
2 Ls 3 x 2 1/2 x 1/4	4	3	6	4
2 Ls 3 x 2 1/2 x 1/4	4	3	6	4
2 Ls 3 x 2 1/2 x 1/4	4	3	6	4
2 Ls 3 x 2 1/2 x 1/4	4	3	6	4
2 Ls 2 1/2 x 2 1/2 x 3/16	3	~	4	4
2 Ls 2 1/2 x 2 x 3/16	2	~	4	4
2 Ls 2 1/2 x 2 x 3/16	2	~	4	4
2 Ls 2 1/2 x 2 x 3/16	2	~	4	4
2 Ls 2 1/2 x 2 x 3/16	2	~	4	4
2 Ls 2 1/2 x 2 x 3/16	2	~	4	4

"X"	"Y"	"Z"	BASE PLATE SIZE	ANCHOR BOLT SIZE	FOUNDATION DATA	COLUMN SIZE
			L x W x T	DIA. x LENGTH	DIA. DRILL SHAFT/W REINF.	
15 1/4"	5"	4"	18"x 3 1/4"x 3'-4 1/2"	2 3/4"x 5'-8"	48" Dr Shaft with 18~#11	W24 x 117
15 1/4"	5"	4"	18"x 3 1/8"x 3'-4 1/2"	2 3/4"x 5'-8"	48" Dr Shaft with 18~#11	W24 x 104
15 1/4"	5"	4"	18"x 3"x 3'-4 1/2"	2 3/4"x 5'-8"	48" Dr Shaft with 18~#11	W24 x 94
15"	4 1/2"	3 3/4"	16 1/2"x 3"x 3'-3"	2 1/2"x 5'-2"	48" Dr Shaft with 14~#11	W24 x 84
14 3/4"	4 1/2"	3 3/4"	16 1/2"x 2 3/4"x 3'-2 1/2"	2 1/2"x 5'-2"	48" Dr Shaft with 14~#11	W24 x 76
14 3/4"	4 1/2"	3 3/4"	16 1/2"x 2 3/4"x 3'-2 1/2"	2 1/2"x 5'-2"	48" Dr Shaft with 14~#11	W24 x 68
13 1/2"	4 1/2"	3 3/4"	16 1/2"x 2 3/4"x 3'-0"	2 1/2"x 5'-2"	42" Dr Shaft with 12~#11	W21 x 68
13 1/2"	4 1/2"	3 3/4"	16 1/2"x 2 1/2"x 3'-0"	2 1/2"x 5'-2"	42" Dr Shaft with 12~#11	W21 x 62
13"	4"	3 1/2"	15"x 2 1/2"x 2'-10"	2 1/4"x 4'-9"	42" Dr Shaft with 10~#11	W21 x 57
11 3/4"	4"	3 1/2"	15"x 2 1/2"x 2'-7 1/2"	2 1/4"x 4'-9"	42" Dr Shaft with 10~#11	W18 x 55
11 3/4"	4"	3 1/2"	15"x 2 1/2"x 2'-7 1/2"	2 1/4"x 4'-9"	42" Dr Shaft with 10~#11	W18 x 50
11 1/2"	3 1/2"	3"	13"x 2 1/2"x 2'-6"	2"x 4'-3"	42" Dr Shaft with 8~#10	W18 x 46
10 1/2"	3 1/2"	3"	13"x 2 1/4"x 2'-4"	2"x 4'-3"	36" Dr Shaft with 8~#10	W16 x 40
10 1/4"	3"	2 3/4"	11 1/2"x 2 1/4"x 2'-2 1/2"	1 3/4"x 3'-10"	36" Dr Shaft with 8~#9	W16 x 36
9 1/2"	3"	2 3/4"	11 1/2"x 2 1/4"x 2'-1"	1 3/4"x 3'-10"	36" Dr Shaft with 8~#9	W14 x 34
9 1/4"	3"	2 3/4"	11 1/2"x 2"x 2'-0 1/2"	1 3/4"x 3'-10"	36" Dr Shaft with 8~#9	W14 x 30
8"	2 3/4"	2 1/8"	9 3/4"x 1 3/4"x 1'-9 1/2"	1 1/2"x 3'-4"	30" Dr Shaft with 8~#8	W12 x 26
7"	2 1/2"	2"	9"x 1 3/4"x 1'-7"	1 3/8"x 3'-1"	30" Dr Shaft with 8~#8	W10 x 26
6 3/4"	2 1/4"	1 7/8"	8 1/4"x 1 1/2"x 1'-6"	1 1/4"x 2'-11"	30" Dr Shaft with 8~#8	W10 x 22
6 3/4"	2"	1 5/8"	7 1/4"x 1 3/8"x 1'-5 1/2"	1 1/8"x 2'-8"	24" Dr Shaft with 8~#7	W10 x 17
6 1/2"	1 3/4"	1 1/2"	6 1/2"x 1 1/4"x 1'-4 1/2"	1"x 2'-5"	24" Dr Shaft with 8~#7	W10 x 15

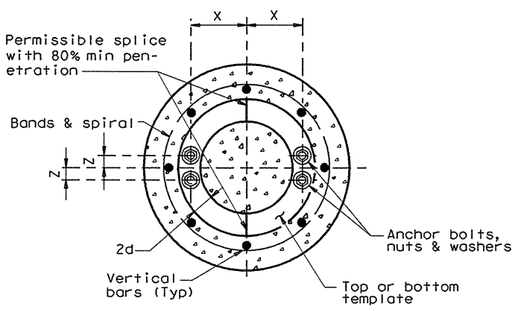

TOP VIEW

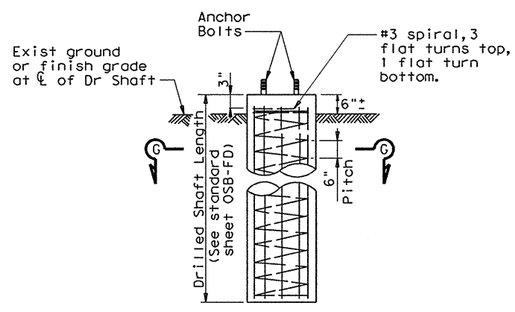

FOUNDATION DETAIL

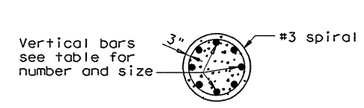

SECTION G-G

Anchor Bolt Dia. (d)	Washer Dimensions				Hole in Base Plate
	Outside Diameter	Hole Diameter	Thickness		
			Min	Max	
1 1/2" or less	2d	d + 1/8"	0.136"	0.177"	d + 1/4"
1 3/4"	2d - 1/8"	d + 1/8"	0.178"	0.280"	d + 5/16"
2"	2d - 1/4"	d + 1/8"	0.178"	0.280"	d + 5/16"
over 2"	2d - 1/2"	d + 1/8"	0.240"	0.340"	d + 5/16"

ANCHOR BOLT SIZE				
DIA	BOLT ③ LENGTH	THREAD ③ LENGTH	PROJECTION LENGTH	GALVAN. ③ LENGTH
1"	2'-5"	4"	4 1/2"	10"
1 1/8"	2'-8"	4 1/2"	5"	10 1/2"
1 1/4"	2'-11"	5"	5 1/2"	11"
1 3/8"	3'-1"	5 1/2"	6"	11 1/2"
1 1/2"	3'-4"	6"	6 1/2"	1'-0"
1 3/4"	3'-10"	7"	7 1/2"	1'-1"
2"	4'-3"	8"	8 1/2"	1'-2"
2 1/4"	4'-9"	9"	9 1/2"	1'-3"
2 1/2"	5'-2"	10"	10 1/2"	1'-4"
2 3/4"	5'-8"	11"	11 1/2"	1'-5"

③ Anchor Bolt Fabrication Tolerances:
Bolt Length ~ ±1/2"
Thread Length ~ ±1/2"
Galvanized Length ~ -1/4"

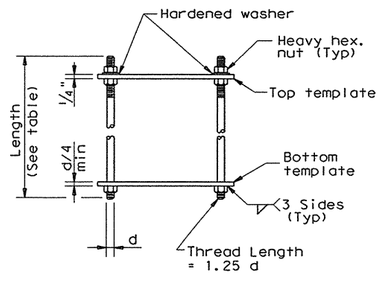

SIDE VIEW
(PRIOR TO INSTALLATION)

ANCHOR BOLT ASSEMBLY

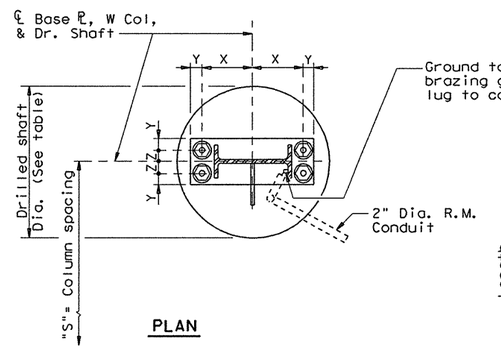

PLAN

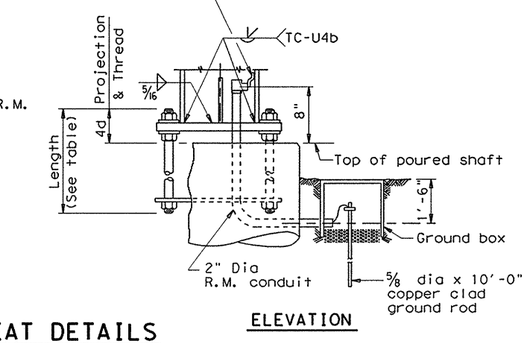

ELEVATION

BEARING SEAT DETAILS

(See table for base plate size anchor bolt size, dimensions X, Y, Z and drilled shaft diameter.)

DISCLAIMER:
The use of this standard is governed by the "Texas Engineering Practice Act". No warranty is expressed or implied by the agency for any purpose whatsoever. TxDOT assumes no responsibility for the conversion of this standard to other formats or for incorrect results or damages resulting from its use.

PATH:
LEVELS DTS.
1

SHEET 2 OF 2

Texas Department of Transportation
Traffic Operations Division

OVERHEAD SIGN BRIDGE TOWER DETAILS

OSBT

FILE: osbt.dgn	DN: TxDOT	CK: TxDOT	DW: TxDOT	CK: TxDOT
© TxDOT November 2007	DISTRICT	FEDERAL AID PROJECT		SHEET
REVISIONS	AUSTIN			643
	COUNTY		CONTROL-SECT-JOB	HIGHWAY
	WILLIAMSON		0683-06-027	SH 45 LOOP 1

45B

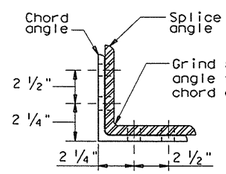

SECTION ON ℄ SPLICE
(6" L Shown)

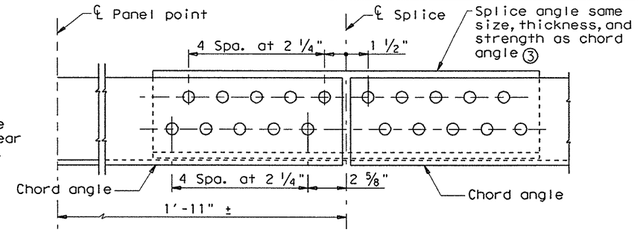

CHORD SPLICE USING ANGLES (SINGLE SHEAR)
(Place splice angle on inside of truss)
(6" L Shown)

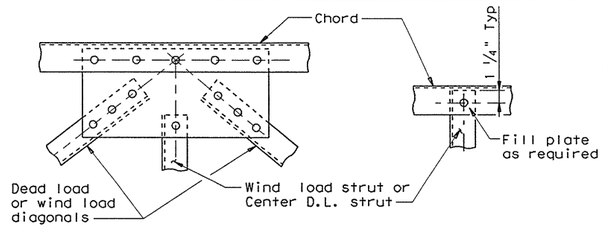

DETAIL A

DETAIL B

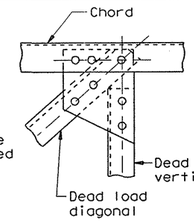

DETAIL C

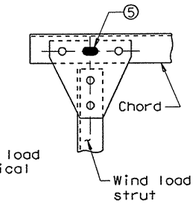

DETAIL D

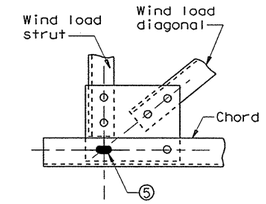

DETAIL E

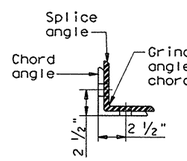

SECTION ON ℄ SPLICE
(4" L Shown)

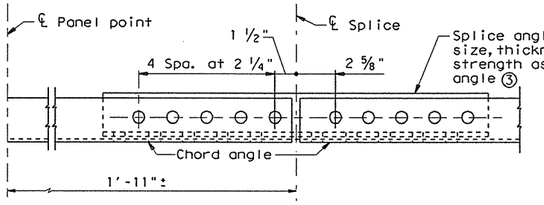

CHORD SPLICE USING ANGLES (SINGLE SHEAR)
(Place splice angle on inside of truss)
(4" L Shown)

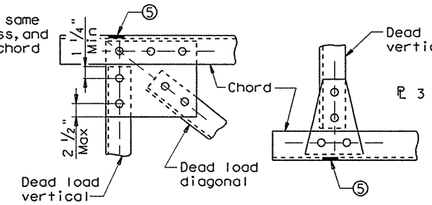

DETAIL F

DETAIL G

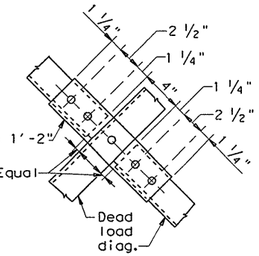

DETAIL H

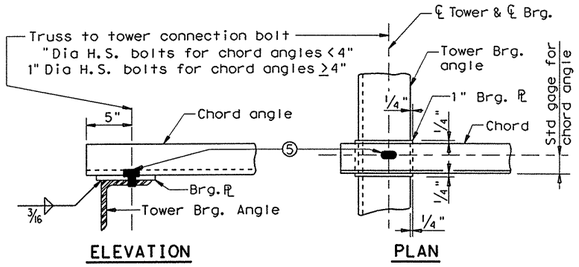

BEARING PLATE DETAILS⑥

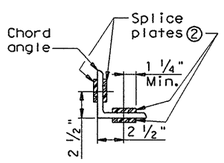

SECTION ON ℄ SPLICE
(4" L Shown)

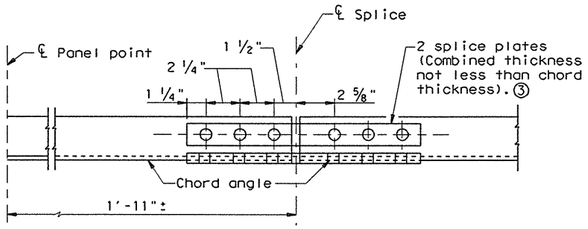

CHORD SPLICE USING PLATES (DOUBLE SHEAR)④

SPLICE DETAILS

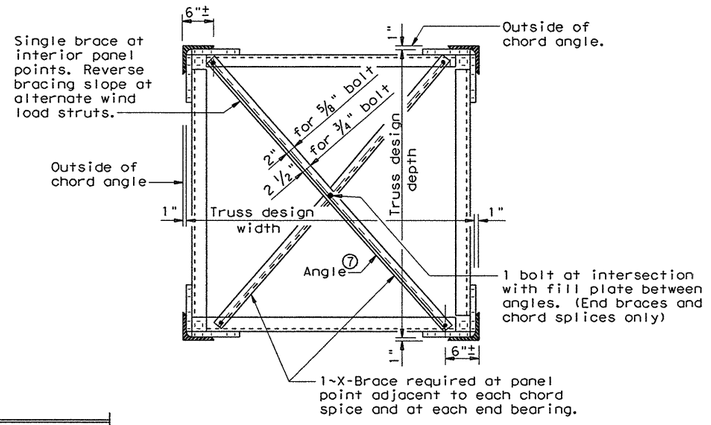

TRUSS SECTION
(Diagonals not shown)

		No. of Bolts required in Gusset ℙ at Chord Connection
Total No. of Bolts in Diagonals at Joints	0	2
	2	2
	3	3
	4	3
	5	4
	6	4
	8	5
	10	6
	12	6

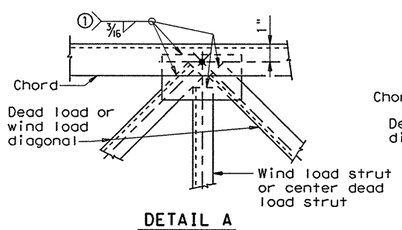

DETAIL A

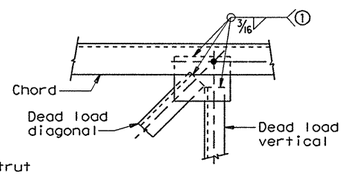

DETAIL C
Gussets plates in details "E" & "F" to be similar.

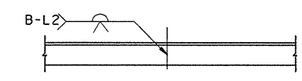

FOR L'S OVER 1/4" IN THICKNESS

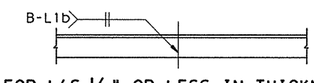

FOR L'S 1/4" OR LESS IN THICKNESS

ALTERNATE WELDED SPLICE AND CONNECTION DETAILS

TABLE OF MINIMUM WELD LENGTHS		
Number of bolts	3/16" Fillet Weld Replaces:	
	5/8" Dia. Bolt	3/4" Dia. Bolt
1	2"	3"
2	4"	6"
3	6"	9"
4	8"	11 1/2"
5	10"	14 1/2"
6	12"	17 1/2"
7	14"	20"

① See "TABLE OF MINIMUM WELD LENGTHS" for the length of welds.

② Area of splice plates shall be equal to or greater than area of chord angle.

③ When chord angles of different thickness are spliced, use shim plate and number of bolts required for thinner angle. For splice angle use thickness of the thinner angle.

④ When splice plates are used on both sides of chord angle (double shear) only half the number of bolts shown in the table on standard drawing "OVERHEAD SIGN BRIDGE DETAILS" are required.

⑤ Slotted hole in Gusset ℙ and chord angle 1"x 1 1/2" slot for 3/4" dia. bolts, 1 1/4"x 2" slot for 1" dia. bolts. Use ℙ washer on Gusset ℙ side.

⑥ Bearing plate may be omitted if welded connections are used on wind truss.

⑦ 2"x 1 1/2"x 3/16" angle for 5/8" Dia bolts [1]
2 1/2"x 2"x 3/16" angle for 3/4" Dia bolts [1]

GENERAL NOTES:

All bolts shall be in accordance with Item 447, "Structural Bolting".

The truss shall have an upward camber not less than the dead load deflections shown in the table on standard drawings "Overhead Sign Bridge Details" when blocked at the ends under dead load of the truss only.

Chord angles may be spliced in convenient lengths for galvanizing. Connection and splice details are typical only. Actual size of member and number of bolts will vary. The details shown on this sheet are intended as a guide only. See standard drawings "Overhead Sign Bridge Details" for number of bolts and size of members. Number of bolts shown for chord splice is based on single shear.

Gusset plates to be same thickness as thickest web member in connection.

DISCLAIMER:
The use of this standard is governed by the "Texas Engineering Practice Act". No warranty of any kind is made by TxDOT for any purpose whatsoever. TxDOT assumes no responsibility for the conversion of this standard to other formats or for incorrect results or damages resulting from its use.

PATH:
LEVELS 01-
1

Texas Department of Transportation
Traffic Operations Division

OVERHEAD SIGN BRIDGE TRUSS DETAILS

OSBC

FILE: osbc.dgn	DN: TxDOT	CK: TxDOT	DW: TxDOT	CK: TxDOT
©TxDOT November 2007	DISTRICT	FEDERAL AID PROJECT		SHEET
REVISIONS	AUSTIN			644
	COUNTY		CONTROL-SECT-JOB	HIGHWAY
	WILLIAMSON		0683-06-027	SH 45 LOOP 1

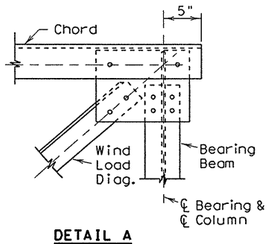

DETAIL A

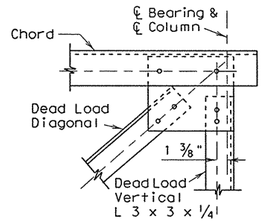

DETAIL F

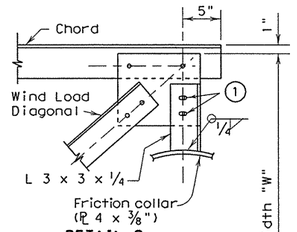

DETAIL C

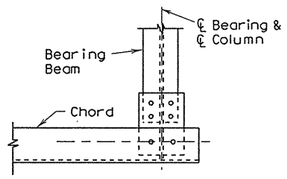

DETAIL B

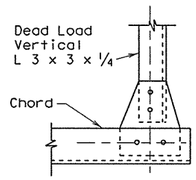

DETAIL G

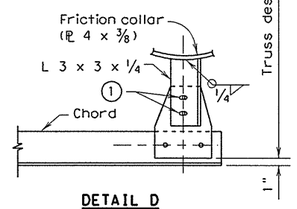

DETAIL D

① Slotted holes in gusset plates only.

② Oversized Hole diameter = Anchor Bolt diameter + 1/2"

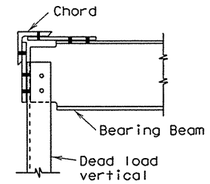

DETAIL E

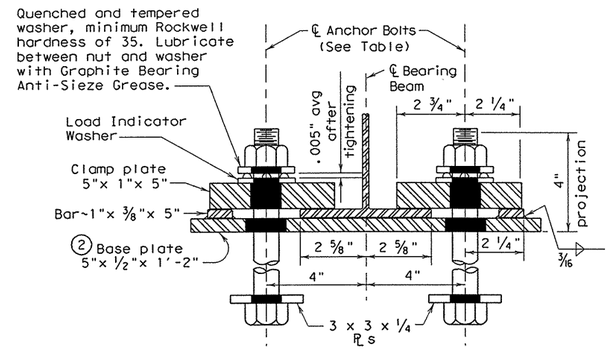

SECTION H-H

Note: When Bearing Beam is located off center, clamp plate may be turned as needed to give bearing area.

GENERAL NOTES:

Design conforms to the 1975 AASHTO Standard Specifications for Structural Supports for Highway Signs, Luminaires and Traffic Signals and Interim revisions thereto.

All structural steel shall conform to ASTM A36.

All parts, including anchor bolts, shall be galvanized after fabrication per Item 445, "Galvanizing".

Details on this sheet are applicable for design wind heights between 15 and 30 feet.

All connection bolts shall conform to ASTM A325 Type 1.

After truss is aligned in its final position, anchor bolt nuts shall be tack welded to washer and washer tack welded to clamp plate. Galvanizing in welded area shall be repaired in accordance with Item 445, "Galvanizing".

Anchor bolts and nuts for anchor bolts shall be "Alloy Steel" per Item 449 "Anchor Bolts".

Anchor bolts shall be tightened per Item 449.

Truss End Wind Struts are replaced by Bearing Beam on top and Friction Collar with L 3 x 3 x 1/4. on bottom. End Dead Load Verticals are replaced by L 3 x 3 x 1/4. Details and towers shown on standard drawing OSBT are not used with single column towers.

For connection details not shown hereon see standard drawing OSBC.

All concrete shall be Class C.

All reinforcing steel shall conform to Item 440, "Reinforcing Steel".

Details shown hereon are intended to be used with standard drawings "Overhead Sign Bridge Details" and OSBC. Details shown on standard drawing OSBC should be modified as shown on this drawing. When this drawing is used standard drawing OSBT is not required.

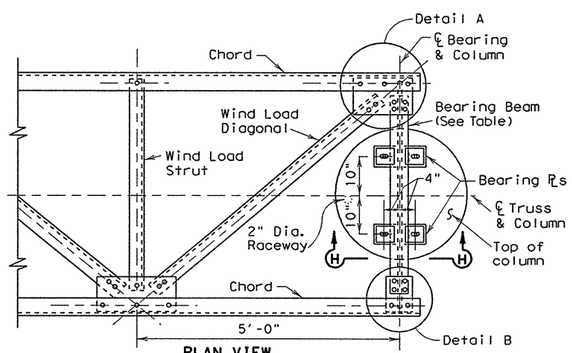

PLAN VIEW
(TOP CHORD)

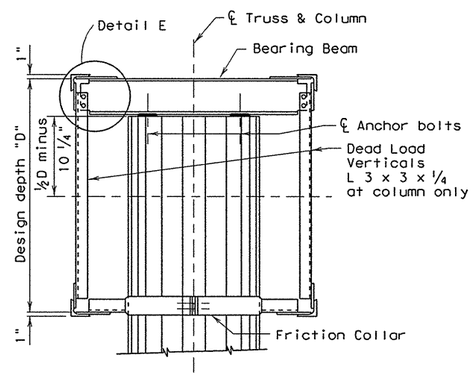

END VIEW

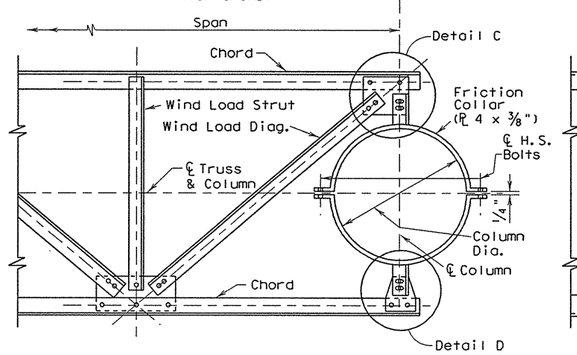

PLAN VIEW
(BOTTOM CHORD)

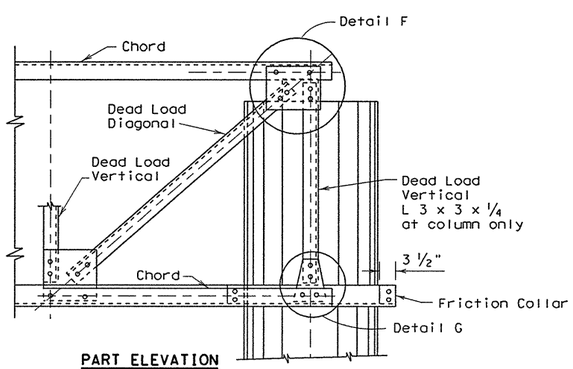

PART ELEVATION

TRUSS END CONNECTION MODIFICATION DETAILS

DISCLAIMER:
The use of this standard is governed by the "Texas Engineering Practice Act". No warranty of any kind is made by TxDOT for any purpose whatsoever. TxDOT assumes no responsibility for the conversion of this standard to other formats or for incorrect results or damages resulting from its use.

PATH:

LEVELS DIS.

SHEET 1 OF 2

Texas Department of Transportation
Traffic Operations Division

OVERHEAD SIGN BRIDGE TRUSS DETAILS SINGLE COLUMN

OSBC-SC-Z4

FILE: osbc-sc-z4.dgn	DN: TxDOT	CK: TxDOT	DW: TxDOT	CK: TxDOT
©TxDOT November 2007	DISTRICT	FEDERAL AID PROJECT		SHEET
REVISIONS	AUSTIN			645
	COUNTY		CONTROL-SECT-JOB	HIGHWAY
	WILLIAMSON		0683-06-027	SH 45, LOOP 1

50A

ZONE 4 70 M.P.H. WIND

		SPAN	REACTIONS			COLUMN BENDING MOMENTS (Kip-Ft.)																			
		Ft.	D.L.	W.L.	Torque	14'	15'	16'	17'	18'	19'	20'	21'	22'	23'	24'	25'	26'	27'	28'	29'	30'	31'	32'	Height
¾" Dia x 1'-3" Anchor Bolts	W 8 x 15 BEARING BEAM	40	2.65	5.03	8.97	81	86	91	96	101	106	112	117	122	127	132	137	142	147	153	158	163	168	173	30" Diameter Column
		45	2.98	5.66	10.09	91	97	102	108	114	120	126	131	137	143	149	154	160	166	172	178	183	189	195	
		50	3.33	6.29	11.21	101	107	114	120	127	133	140	146	152	159	165	172	178	184	191	197	204	210	217	
		55	3.81	6.93	12.34	111	118	125	133	140	147	154	161	168	175	182	189	196	203	210	217	224	231	239	
		60	4.15	7.57	13.46	122	129	137	145	152	160	168	176	183	191	199	206	214	222	230	237	245	253	261	
		65	4.55	8.21	14.58	132	140	149	157	165	174	182	190	199	207	216	224	232	241	249	257	266	274	283	
		70	5.09	8.85	15.71	142	151	160	169	178	187	196	205	214	223	232	241	250	259	268	277	287	296	305	
		75	5.44	9.49	16.83	152	162	172	181	191	201	210	220	230	239	249	259	269	278	288	298	307	317	327	
		80	6.02	9.87	18.06	159	169	179	189	199	209	219	229	240	250	260	270	280	290	300	310	320	330	340	
		85	6.61	10.51	19.19	169	180	191	201	212	223	234	244	255	266	276	287	298	309	319	330	341	352	362	
		90	7.03	11.15	20.32	180	191	202	214	225	236	248	259	271	282	293	305	316	327	339	350	362	373	384	
		95	7.55	11.79	21.45	190	202	214	226	238	250	262	274	286	298	310	322	334	346	358	370	382	394	406	
		100	8.20	12.81	23.65	207	220	233	246	259	272	285	298	311	324	337	350	363	376	390	403	416	429	442	
		105	8.91	13.48	24.83	217	231	245	259	272	286	299	314	327	341	355	369	382	396	410	424	437	451	465	
		110	9.34	14.15	26.02	228	243	257	271	286	300	315	329	344	358	372	387	401	416	430	445	459	473	488	
		115	9.87	14.81	27.20	239	254	269	284	299	314	329	344	360	375	390	405	420	435	450	465	480	495	511	
		120	10.45	15.52	29.82	251	267	283	299	315	331	346	362	378	394	410	426	441	457	473	489	505	521	536	
1" Dia x 1'-6" Anchor Bolts		125	11.30	16.20	31.06	262	279	295	312	328	345	362	378	395	411	428	444	461	477	494	510	527	543	560	
		130	12.04	16.87	32.31	273	290	308	325	342	359	376	394	411	428	445	462	480	497	514	531	549	566	583	
		135	12.60	17.55	33.56	284	302	320	338	356	374	392	409	427	445	463	481	499	517	535	553	571	588	606	
		140	13.76	18.28	34.81	296	314	333	352	370	389	408	426	445	464	482	501	520	538	557	576	594	613	631	
		145	14.26	19.01	36.06	308	327	346	366	385	404	424	443	463	482	501	521	540	560	579	598	618	637	657	36" Diameter Column
		150	15.72	19.75	37.32	319	339	360	380	400	420	440	460	481	501	521	541	561	581	601	622	642	662	682	
		155	16.25	20.54	38.57	332	353	374	395	416	437	458	479	499	520	541	562	583	604	625	646	667	688	709	

For column and drilled shaft reinforcing steel see standard drawing OSBS-SC.
D.L. and W.L. reactions are in Kips.
Torque reactions are in Kip-Feet (Kip-Ft.).

COLUMN BARS		
BAR SIZE	BAR LAP	
	Gr 40	Gr 60
# 9	3'-10"	5'-8"
#10	4'-10"	7'-3"
#11	5'-11"	8'-11"

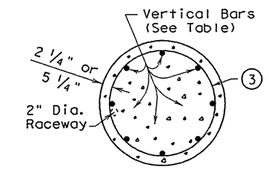

COLUMN & SHAFT SECTION A-A

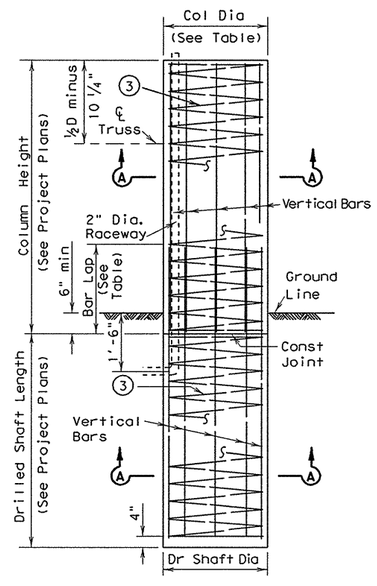

COLUMN & SHAFT EQUAL SIZE

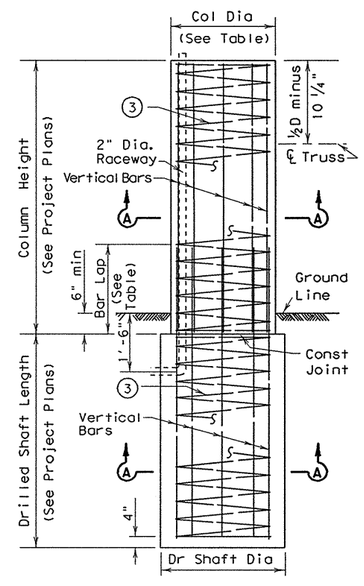

COLUMN & SHAFT UNEQUAL SIZE

(3) #3 spiral at 6" pitch. Three flat turns top and one flat turn bottom. One flat turn top and bottom in Drilled shaft.

COLUMN AND DRILLED SHAFT DETAILS

NOTE: Use same diameter spiral for both column and drilled shaft.

DISCLAIMER:
The use of this standard is governed by the "Texas Engineering Practice Act". No warranty of any kind is made by TxDOT for any purpose whatsoever. TxDOT assumes no responsibility for the conversion of this standard to other formats or for incorrect results or damages resulting from its use.

PATH:

LEVELS DI:

SHEET 2 OF 2

Texas Department of Transportation
Traffic Operations Division

OVERHEAD SIGN BRIDGE TRUSS DETAILS SINGLE COLUMN

OSBC-SC-Z4

FILE: osbc-sc-z4.dgn	DN: TxDOT	CK: TxDOT	DW: TxDOT	CK: TxDOT
© TxDOT November 2007	DISTRICT	FEDERAL AID PROJECT		SHEET
REVISIONS	AUSTIN			646
	COUNTY		CONTROL-SECT-JOB	HIGHWAY
	WILLIAMSON		0683-06-027	SH 45 LOOP 1

50B

DISCLAIMER:
The use of this standard is governed by the "Texas Engineering Practice Act". No warranty of any kind is made by TxDOT for any purpose whatsoever. TxDOT assumes no responsibility for the conversion of this standard to other formats or for incorrect results or damages resulting from its use.

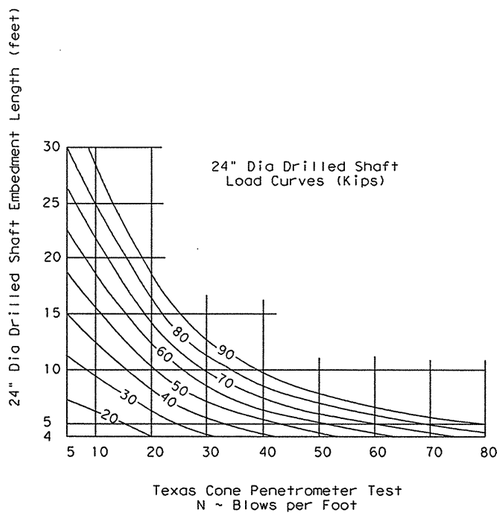

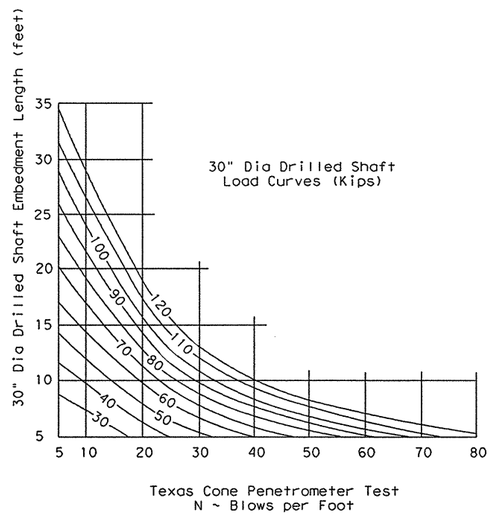

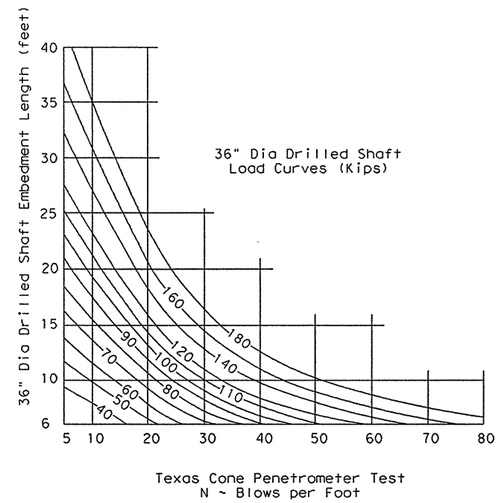

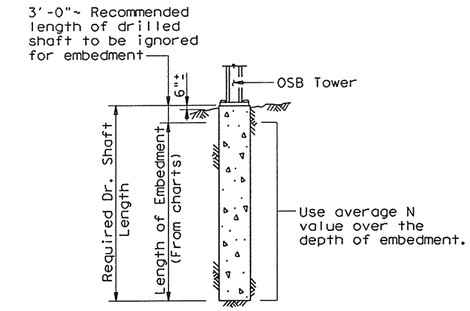

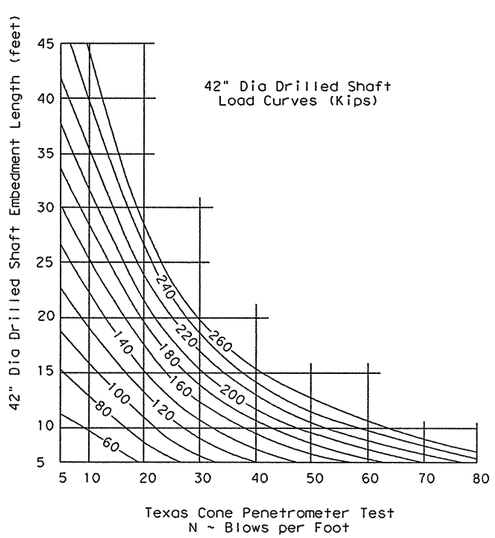

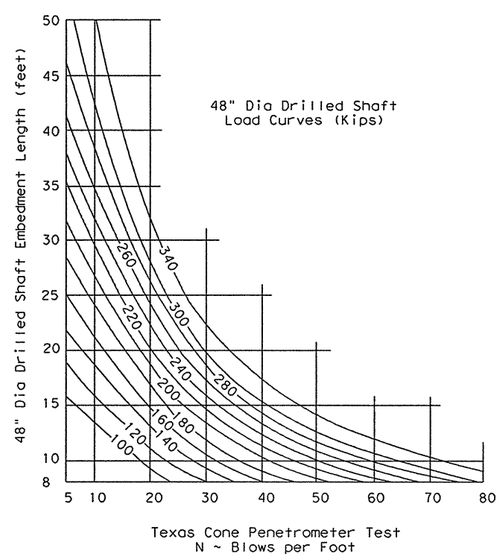

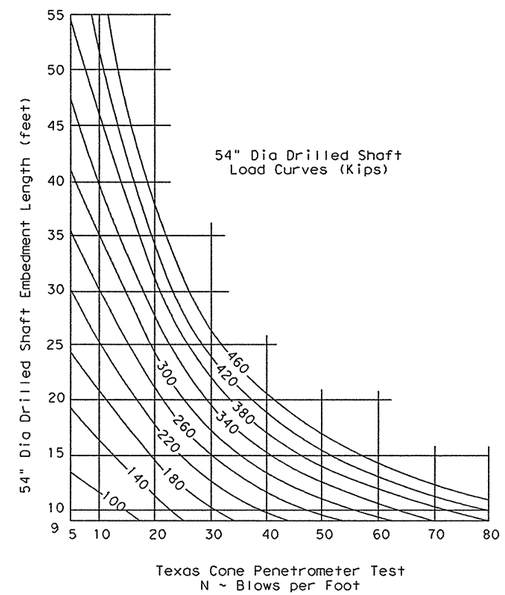

PROCEDURE:

1. Determine uplift from the applicable "Overhead Sign Bridge Details" standard drawing.
2. Determine required drilled shaft diameter from standard drawing OSBT.
3. Make an initial estimate of the required embedment length.
4. From Texas Cone Penetrometer Test data determine the average N value over the length of embedment.
5. Enter chart (for the correct shaft diameter) from the bottom at the average N value.
6. Proceed vertically into chart and locate intersection with column uplift. Interpolate between curves as needed.
7. From intersection point turn 90° to left and read embedment length along vertical scale.
8. If embedment length differs significantly from estimated value return to step 4 with embedment length determined in step 7.
9. Compute the required length of drilled shaft by adding 3'-0" to the required embedment length.

GENERAL NOTES:

These charts are to be used for Simple Span Overhead Sign Bridges with two shafts per tower.

Numbers shown on curved lines are uplift in kip.

Dead load of concrete in drilled shafts is included in curves.

Minimum embedment of drilled shafts is two diameters.

Load curves shall not be extrapolated below the N value of 5 blows per foot.

Texas Department of Transportation
Traffic Operations Division

FOUNDATION EMBEDMENT SELECTION CHARTS

OSB-FD

FILE: osb-fd.dgn	DN: TxDOT	CK: TxDOT	DW: TxDOT	CK: TxDOT
© TxDOT November 2007	DISTRICT	FEDERAL AID PROJECT		SHEET
REVISIONS	AUSTIN			647
	COUNTY		CONTROL-SECT-JOB	HIGHWAY
	WILLIAMSON		0683-06-027	IH 35 LOOP 1

PATH:
LEVELS DIS.
1

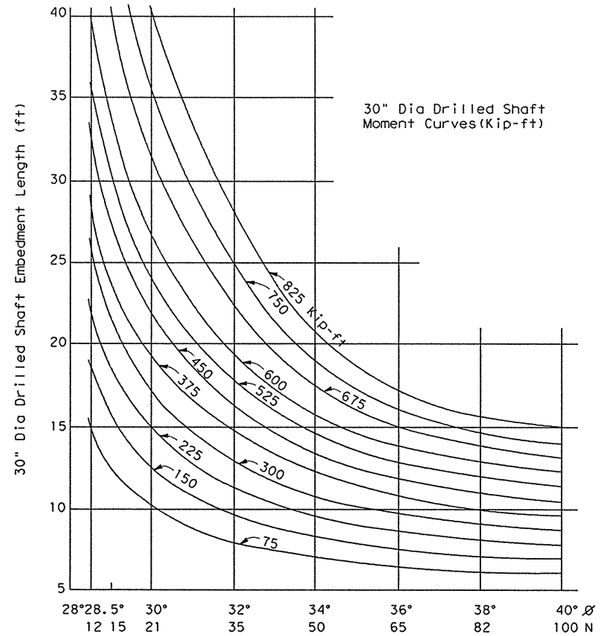

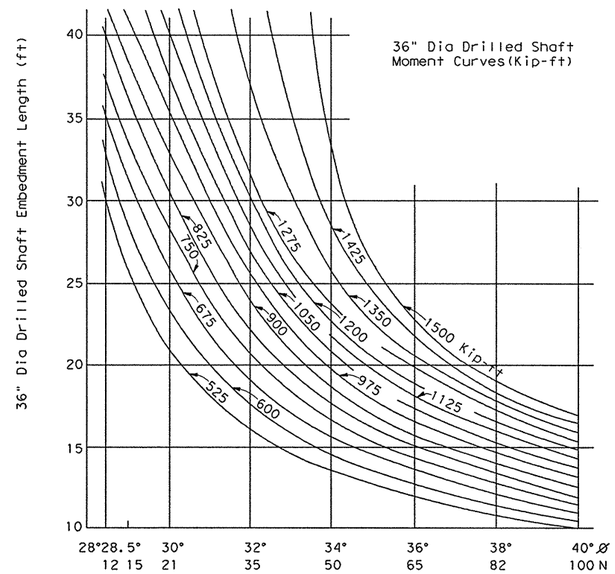

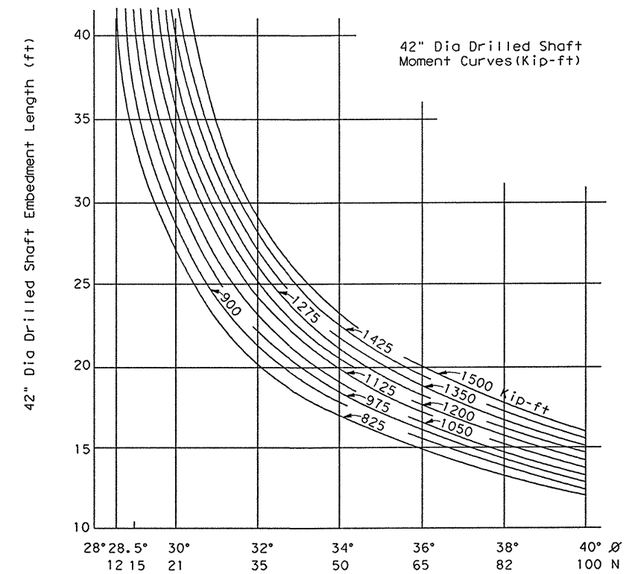

① SUBMERGED SAND SOIL (COHESIONLESS)

① NOTE:
For unsubmerged sands and clayey sands the charts for clay soil will give a conservative foundation design.

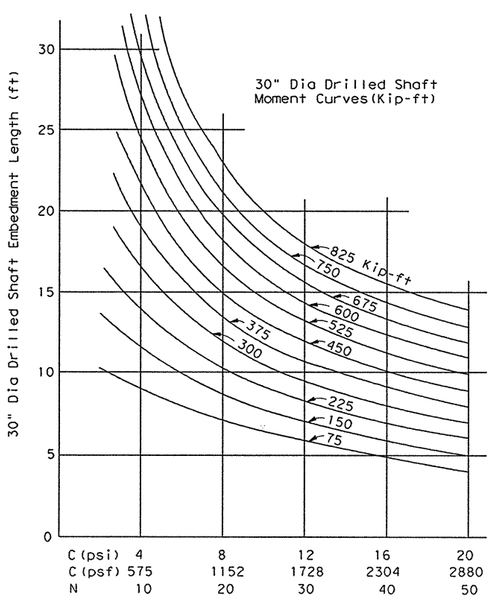

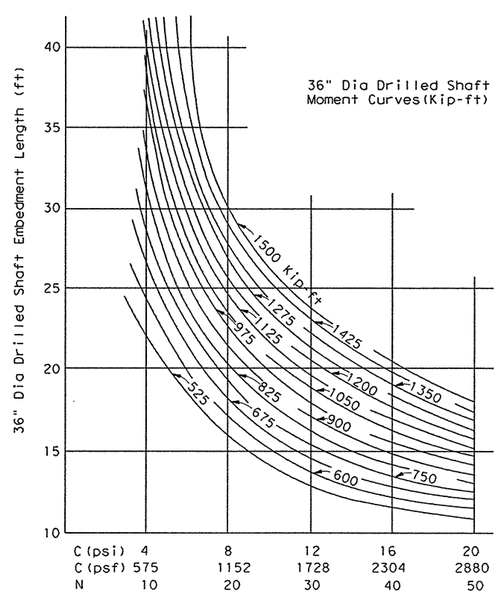

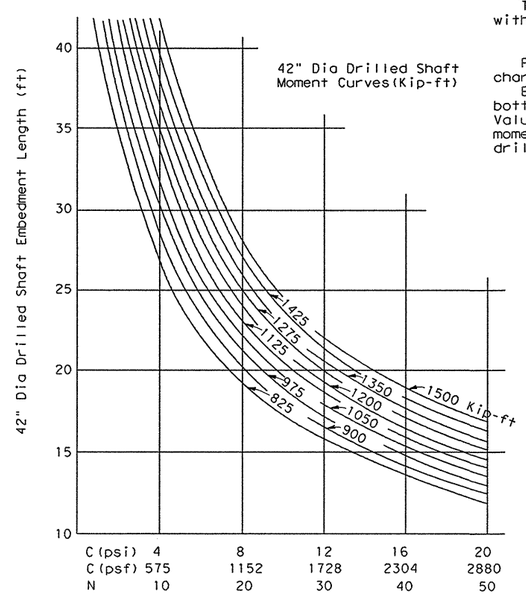

CLAY SOIL

GENERAL NOTES:

Minimum embedment of drilled shafts is two diameters. Add 3'-0" to required embedment length to determine required length of drilled shaft.

These graphs are intended for use with Overhead Sign Bridges, with one shaft footing. (Not suitable for cantilever structures).

C = Cohesive shear strength of soil, in psf.

Ø = Angle of internal friction of soil, in degrees.

For values of C and Ø which are intermediate to those on the charts, embedments may be determined by straight line interpolation.

Enter graph (for the correct shaft size and soil type) from the bottom, either with soil properties, C or Ø or with Texas Penetrometer Value N. Proceed upward into graph and locate intersection with column moment, from intersection point turn 90° to left and read lengths of drilled shafts along left side of graph.

DISCLAIMER:
The use of this standard is governed by the "Texas Engineering Practice Act". No warranty of any kind is made by TxDOT for any purpose whatsoever. TxDOT assumes no responsibility for the conversion of this standard to other formats or for incorrect results or damages resulting from its use.

PATH:

LEVELS DIs

Texas Department of Transportation
Traffic Operations Division

FOUNDATION EMBEDMENT SELECTION CHARTS

OSB-FD-SC

FILE: osb-fd-sc.dgn	DN: TxDOT	CK: TxDOT	DW: TxDOT	CK: TxDOT
© TxDOT November 2007	DISTRICT	FEDERAL AID PROJECT		SHEET
REVISIONS	AUSTIN			648
	COUNTY		CONTROL-SECT-JOB	HIGHWAY
	WILLIAMSON		0683-06-027	SH 45 LOOP 1

COSS STRUCTURES

	STRUCTURE NO. AND STATION	ALL
	DESIGN HEIGHT, Hd (FEET)	30' - 45'
TRUSS DETAILS	LENGTH OF SPAN (FEET)	25'
	W x D & SIZE HS BOLTS	4' x 4' W/ 5/8" Dia HS Bolts
	LENGTH OF TRUSS PANELS	End = 2' - 6" Other = 5' - 0"
	CHORD *	3" x 3" x 1/4" [6]
	DEAD LOAD DIAGONAL	2 1/2" x 1 1/2" x 3/16" [2]
	WIND LOAD DIAGONAL *	2 1/2" x 2 1/2" x 3/16" [3]
	DEAD LOAD VERTICAL *	2 1/2" x 1 1/2" x 3/16" [2]
	WIND LOAD STRUT	2" x 2" x 3/16" [2]
	TRUSS DL & DEFL *	DL = 43 #/ft., Δ_v = 0.809"
TOWER DETAILS	TOWER HEIGHT AT TRUSS ℄	28' - 37'
	TOWER PIPE DIA & WALL THICKNESS	Dia = 24" * Thick = 0.625"
	TOWER PIPE Δ_H AT ℄ TRUSS *	<1.323"
	NO. & SIZE OF ANCHOR BOLTS *	8 @ 2 1/2"
	ANCHOR BOLT CIRCLE DIA *	30.5"
	BASE ℄ SIZE *	36" x 2 3/4"
	TRUSS TO TOWER CONNECTION *	6 @ 5/8"
DESIGN LOADS		
	SHEAR (KIPS) *	9.05
	TORSION (FT. KIPS) *	101.09
	MOMENT (FT. KIPS) *	340.31
FOUNDATION	SOIL (Sand or Clay) & "N"	Clay w/ "N" = 20
	SIZE & LENGTH OF DR SHAFT	48" @ 15'
	MAIN SHAFT STEEL *	16 - # 11
	SHAFT SPIRAL REINFORCING	#4 @ 6" Pitch (GR 60)

SPECIAL ZONE CMS NO ICE (70 MPH) FOR DESIGN HEIGHTS 30.0' AND ABOVE

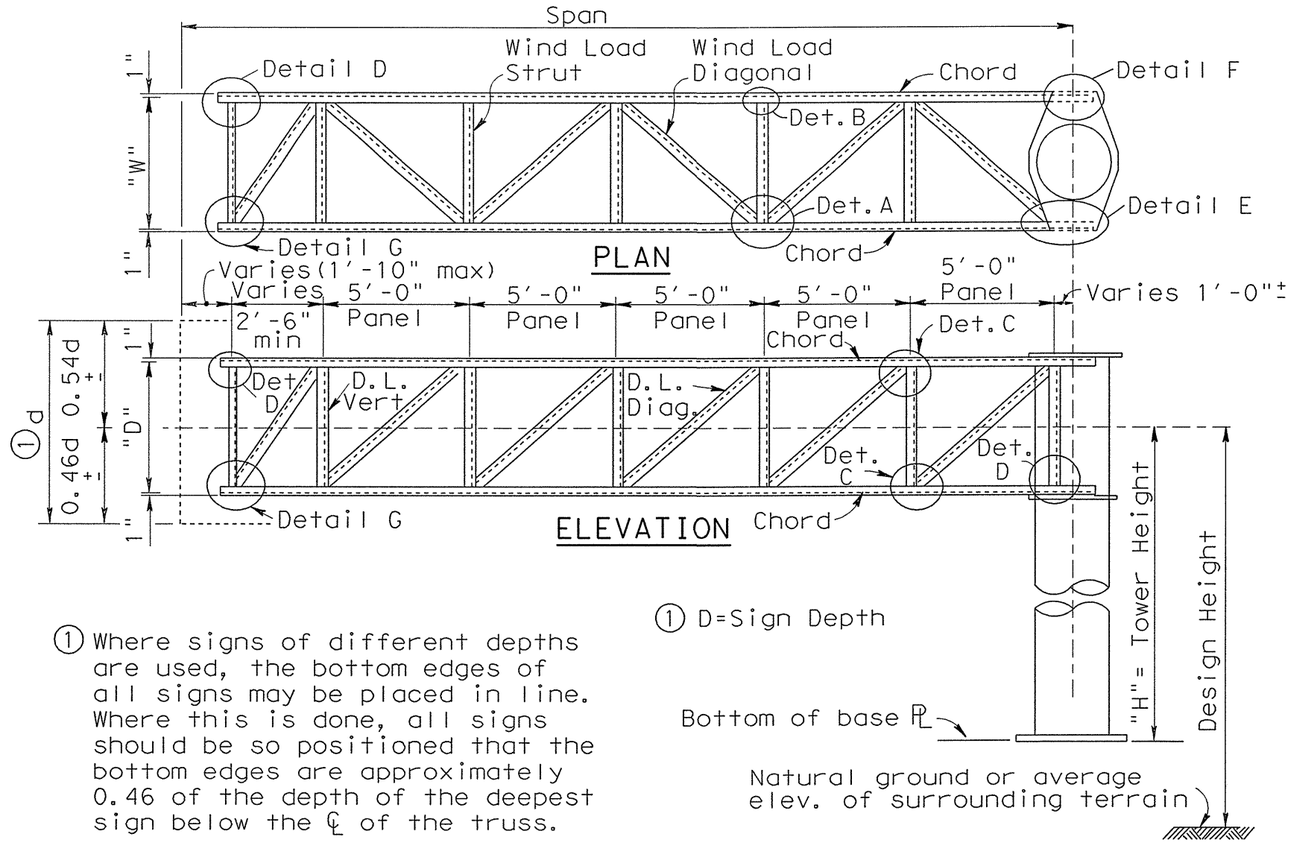

① Where signs of different depths are used, the bottom edges of all signs may be placed in line. Where this is done, all signs should be so positioned that the bottom edges are approximately 0.46 of the depth of the deepest sign below the ℄ of the truss.

GENERAL NOTES:

Use tower details, truss to tower connection, and foundation details, shown on standard drawings OSBT, OSBC, COSSD AND COSSF.

Dimensions and connections, should be determined, using member size or combination of members shown on this sheet.

Number of high strength bolts required in truss connection or splice are indicated in brackets, e.g. [3], after the member size.

Design of truss includes 17 #/S.F. for sign panel, 0 #/Lin. Foot for lights and 100 #/Lin. Foot for walkway, all placed as specified for the design sign panel.

Steel for tower pipe shall conform to ASTM A53 Grade B or to ASTM A501. Tower pipe wall thickness shown is the minimum allowable. Fabricator may use the wall thickness shown or pipe of the same diameter with greater wall thickness.

All structural steel shall conform to ASTM A36 except where noted HS 50 which shall be ASTM A441, A572 GR 345 or ASTM A588.

All connection bolts shall conform to ASTM A325 or ASTM A449. All structural steel, connection bolts, nuts and washers shall be galvanized in accordance with the Specifications.

Compensate for truss deflection at free end by offsetting upper and lower bolt holes at truss-to-tower connection.

* Rev. 10-18-96

Texas Department of Transportation
Austin District Traffic

COSS & OSB-SZ
OVERHEAD SIGN
SUPPORT DETAILS

Austin District Standard

© TxDOT 2004

REVISIONS

STATE DISTRICT	FEDERAL REGION	FEDERAL AID PROJECT			SHEET
14	6				649
COUNTY		CONTROL	SECTION	JOB	HIGHWAY
WILLIAMSON		0683	06	027	IH 35 LOOP 1

DISCLAIMER
The use of this standard is governed by the "Texas Engineering Practice Act". No warranty of any kind is made by TxDOT for any purpose whatsoever. TxDOT assumes no responsibility for the conversion of this standard to other formats or for incorrect results or damages resulting from its use.

LEVELS
1 2 3 4 5 6 7 8
11 10 9 20 21 22 23 24
33 34 35 36 37 38 39 40 41 42 43 44 45 46 47 48
65 64 63 62 61 60 59 58 57 56 55 54 53 52 51 50 49

12 13 14 15 16
27 28 29 30 31 32
DATE:
ACC:
FILE:
DN:
CK:
DW:
CK:

DISCLAIMER: The use of this standard is governed by the "Texas Engineering Practice Act". No warranty of any kind is made by TxDOT for any purpose whatsoever. TxDOT disclaims responsibility for the conversion of this standard to other formats or for incorrect results or damages resulting from its use.

ZONE 4 WITH AND WITHOUT ICE 70 MPH WIND

TOWER HEIGHT (ft)	10′ SPAN TOWER PIPE O.D. (in)	WALL THICK (in)	DEFL ΔH (in)	ANCHOR BOLTS SIZE DIA (in)	NO.	BOLT CIR DIA	BASE PLATE SIZE (in)	TRUSS DEFL ΔV (in)	DESIGN LOADS SHEAR V (Kips)	TORSION T (K-ft)	MOMENT M (K-ft)
14′	16	0.250	0.104	1 1/4	6	20 1/2"	24 x 1 1/4	0.2	2.75	12.39	38.53
15′			0.119						2.76		41.23
16′			0.136						2.77		43.94
17′			0.153						2.79		46.68
18′			0.172						2.80		49.43
19′			0.191						2.81		52.20
20′			0.212						2.83		54.99
21′			0.234						2.84		57.79
22′			0.257					0.2	2.85		60.61
23′			0.280					0.3	2.87		63.45
24′			0.305						2.88		66.30
25′			0.331	1 1/4		20 1/2"	24 x 1 1/4		2.89		69.16
26′			0.358	1 3/8		20 3/4"	24 1/2 x 1 3/8		2.90		72.04
27′			0.386						2.92		74.93
28′			0.416						2.93		77.84
29′			0.446						2.94		80.76
30′			0.477	1 3/8		20 3/4"	24 1/2 x 1 3/8		2.96		83.69
31′			0.509	1 1/2		21"	25 x 1 1/2		2.97		86.64
32′	16	0.250	0.543	1 1/2	6	21"	25 x 1 1/2	0.3	2.98	12.39	89.61

TOWER HEIGHT (ft)	15′ SPAN TOWER PIPE O.D. (in)	WALL THICK (in)	DEFL ΔH (in)	ANCHOR BOLTS SIZE DIA (in)	NO.	BOLT CIR DIA	BASE PLATE SIZE (in)	TRUSS DEFL ΔV (in)	DESIGN LOADS SHEAR V (Kips)	TORSION T (K-ft)	MOMENT M (K-ft)
14′	16	0.250	0.234	1 3/8	6	20 3/4"	24 1/2 x 1 1/4	0.5	4.13	28.76	59.63
15′			0.268				24 1/2 x 1 1/4	0.6	4.14		63.62
16′			0.305				24 1/2 x 1 3/8	0.6	4.16		67.63
17′			0.345	1 3/8		20 3/4"	24 1/2 x 1 3/8	0.6	4.17		71.67
18′			0.386	1 1/2		21"	25 x 1 3/8	0.7	4.18		75.74
19′			0.431				25 x 1 1/2	0.7	4.20		79.83
20′			0.477					0.7	4.21		83.94
21′			0.526					0.8	4.22		88.08
22′			0.577		6		25 x 1 1/2	0.8	4.23		92.23
23′			0.631		8		25 x 1 5/8	0.9	4.25		96.40
24′			0.687					0.9	4.26		100.60
25′			0.745					0.9	4.27		104.81
26′			0.806					1.0	4.29		109.03
27′			0.869						4.30		113.28
28′		0.250	0.935						4.31		117.54
29′		0.280	0.898						4.33		121.82
30′			0.961						4.34		126.11
31′			1.026					1.0	4.35		130.42
32′	16	0.280	1.094	1 1/2	8	21"	25 x 1 5/8	1.1	4.36	28.76	134.74

TOWER HEIGHT (ft)	20′ SPAN TOWER PIPE O.D. (in)	WALL THICK (in)	DEFL ΔH (in)	ANCHOR BOLTS SIZE DIA (in)	NO.	BOLT CIR DIA	BASE PLATE SIZE (in)	TRUSS DEFL ΔV (in)	DESIGN LOADS SHEAR V (Kips)	TORSION T (K-ft)	MOMENT M (K-ft)
14′	16	0.250	0.419	1 3/4	6	21 1/2"	26 x 1 3/4	1.3	5.59	52.67	83.06
15′		0.250	0.481					1.4	5.61		88.34
16′		0.250	0.547					1.5	5.62		93.66
17′		0.281	0.549					1.4	5.63		99.03
18′			0.615					1.5	5.64		104.44
19′			0.685					1.5	5.66		109.88
20′		0.281	0.759				26 x 1 3/4	1.6	5.67		115.36
21′		0.310	0.759				26 x 2	1.5	5.68		120.86
22′			0.834					1.6	5.70		126.40
23′			0.911		6			1.7	5.71		131.96
24′		0.310	0.992		8				5.77		138.12
25′		0.340	0.990						5.73		143.15
26′		0.340	1.071					1.7	5.75		148.78
27′		0.340	1.155					1.8	5.76		154.43
28′		0.375	1.139					1.7	5.77		160.10
29′		0.375	1.221					1.8	5.79		165.79
30′		0.375	1.307						5.80		171.49
31′		0.410	1.297						5.81		177.22
32′	16	0.410	1.382	1 3/4	8	21 1/2"	26 x 2	1.8	5.83	52.67	182.97

TOWER HEIGHT (ft)	25′ SPAN TOWER PIPE O.D. (in)	WALL THICK (in)	DEFL ΔH (in)	ANCHOR BOLTS SIZE DIA (in)	NO.	BOLT CIR DIA	BASE PLATE SIZE (in)	TRUSS DEFL ΔV (in)	DESIGN LOADS SHEAR V (Kips)	TORSION T (K-ft)	MOMENT M (K-ft)
14′	20	0.250	0.333	1 3/8	8	24 3/4"	28 1/2 x 1 3/8	1.4	7.00	82.44	107.23
15′			0.382					1.5	7.02		113.64
16′			0.435					1.6	7.03		120.14
17′			0.491					1.7	7.05		126.71
18′			0.550	1 3/8		24 3/4"	28 1/2 x 1 3/8	1.7	7.07		133.34
19′			0.613	1 1/2		25"	29 x 1 1/2	1.8	7.08		140.03
20′			0.679					1.9	7.10		146.77
21′		0.250	0.749					2.0	7.12		153.56
22′		0.281	0.735				29 x 1 1/2		7.13		160.39
23′			0.803				29 x 1 5/8		7.15		167.26
24′			0.874	1 1/2		25"			7.16		174.17
25′		0.281	0.949	1 3/4		25 3/8"		2.0	7.18		181.12
26′		0.312	0.920				29 x 1 5/8	2.1	7.20		188.02
27′			0.992				29 3/4 x 1 3/4		7.21		195.03
28′			1.067				29 3/4 x 1 3/4		7.23		202.07
29′		0.312	1.145				29 3/4 x 1 3/4	2.1	7.24		209.14
30′		0.344	1.119				29 3/4 x 2	2.2	7.26		216.23
31′		0.344	1.194				29 3/4 x 2	2.2	7.28		223.35
32′	20	0.344	1.273	1 3/4	8	25 3/8"	29 3/4 x 2	2.2	7.29	82.44	230.50

ZONE 4 WITH AND WITHOUT ICE 70 MPH WIND

TOWER HEIGHT (ft)	30′ SPAN TOWER PIPE O.D. (in)	WALL THICK (in)	DEFL ΔH (in)	ANCHOR BOLTS SIZE DIA (in)	NO.	BOLT CIR DIA	BASE PLATE SIZE (in)	TRUSS DEFL ΔV (in)	DESIGN LOADS SHEAR V (Kips)	TORSION T (K-ft)	MOMENT M (K-ft)
14′	24	0.250	0.285	1 1/2	8	29"	33 x 1 1/2	1.6	8.42	119.01	134.48
15′			0.327					1.6	8.44		141.90
16′			0.372					1.7	8.46		149.44
17′			0.420					1.8	8.48		157.10
18′			0.471					1.9	8.50		164.85
19′			0.524					2.0	8.52		172.68
20′			0.581					2.1	8.54		180.60
21′			0.641	1 1/2		29"	33 x 1 1/2	2.2	8.56		188.59
22′			0.703	1 3/4		29 3/8"	33 3/4 x 1 1/2	2.2	8.58		196.65
23′			0.768				33 3/4 x 1 1/2	2.3	8.60		204.76
24′			0.837				33 3/4 x 1 5/8	2.4	8.62		212.93
25′			0.908				33 3/4 x 1 5/8	2.5	8.64		221.15
26′		0.250	0.982				33 3/4 x 1 5/8	2.6	8.66		229.42
27′		0.281	0.949				33 3/4 x 1 3/4	2.4	8.67		237.74
28′			1.021				33 3/4 x 1 3/4	2.5	8.69		246.10
29′			1.095	1 3/4		29 3/8"	33 3/4 x 1 3/4	2.6	8.71		254.49
30′			1.172	2		29 3/4"	34 1/2 x 1 3/4	2.7	8.73		262.93
31′			1.251	2		29 3/4"	34 1/2 x 1 3/4	2.8	8.75		271.41
32′	24	0.281	1.333	2	8	29 3/4"	34 1/2 x 1 3/4	2.8	8.77	119.01	279.92

TOWER HEIGHT (ft)	35′ SPAN TOWER PIPE O.D. (in)	WALL THICK (in)	DEFL ΔH (in)	ANCHOR BOLTS SIZE DIA (in)	NO.	BOLT CIR DIA	BASE PLATE SIZE (in)	TRUSS DEFL ΔV (in)	DESIGN LOADS SHEAR V (Kips)	TORSION T (K-ft)	MOMENT M (K-ft)
14′	24	0.250	0.406	1 3/4	8	29 3/8"	33 3/4 x 1 1/2	2.6	9.77	161.98	165.20
15′			0.467					2.7	9.79		173.37
16′			0.531					2.8	9.81		181.71
17′		0.250	0.599				33 3/4 x 1 1/2	3.0	9.83		190.21
18′		0.281	0.602				33 3/4 x 1 5/8	2.9	9.85		198.85
19′			0.671					3.0	9.87		207.61
20′			0.743					3.1	9.89		216.48
21′			0.820				33 3/4 x 1 5/8	3.2	9.91		225.46
22′		0.281	0.900				33 3/4 x 1 3/4	3.4	9.93		234.52
23′		0.312	0.889				33 3/4 x 1 3/4	3.2	9.95		243.67
24′			0.968	1 3/4		29 3/8"	33 3/4 x 1 3/4	3.3	9.96		252.90
25′			1.050	2		29 3/4"	34 1/2 x 1 7/8	3.5	9.98		262.20
26′			1.136					3.6	10.00		271.57
27′		0.312	1.225					3.7	10.02		280.99
28′		0.340	1.200				34 1/2 x 1 7/8	3.5	10.04		290.48
29′			1.287				34 1/2 x 2	3.6	10.06		300.02
30′			1.377					3.7	10.08		309.61
31′			1.471					3.8	10.10		319.25
32′	24	0.340	1.567	2	8	29 3/4"	34 1/2 x 2	3.9	10.12	161.98	328.93

TOWER HEIGHT (ft)	40′ SPAN TOWER PIPE O.D. (in)	WALL THICK (in)	DEFL ΔH (in)	ANCHOR BOLTS SIZE DIA (in)	NO.	BOLT CIR DIA	BASE PLATE SIZE (in)	TRUSS DEFL ΔV (in)	DESIGN LOADS SHEAR V (Kips)	TORSION T (K-ft)	MOMENT M (K-ft)
14′	30	0.250	0.280	1 3/4	8	35 3/8"	39 3/4 x 1 1/2	2.4	11.22	211.94	200.44
15′			0.322					2.5	11.24		209.33
16′			0.366					2.6	11.27		218.45
17′			0.413					2.7	11.29		227.79
18′			0.463					2.8	11.32		237.32
19′		0.250	0.516					2.9	11.34		247.01
20′		0.281	0.510					2.8	11.37		256.86
21′			0.562					2.9	11.39		266.86
22′			0.617					3.0	11.41		276.98
23′			0.675				39 3/4 x 1 1/2	3.1	11.44		287.22
24′			0.735	1 3/4		35 3/8"	39 3/4 x 1 5/8	3.2	11.46		297.57
25′			0.797	2		35 3/4"	40 1/2 x 1 5/8	3.3	11.49		308.01
26′			0.862				40 1/2 x 1 5/8	3.4	11.51		318.55
27′			0.930				40 1/2 x 1 5/8	3.5	11.54		329.18
28′			1.000				40 1/2 x 1 3/4	3.6	11.56		339.89
29′			1.073					3.7	11.58		350.68
30′			1.148					3.8	11.61		361.53
31′			1.226					3.9	11.63		372.46
32′	30	0.281	1.306	2	8	35 3/4"	40 1/2 x 1 3/4	4.0	11.68	211.94	384.26

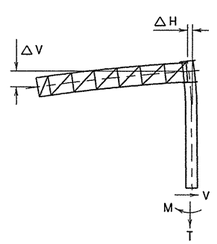

ELEVATION

(SHOWING DESIGN LOADS AND DEAD LOAD DEFLECTIONS)

TRUSS DETAILS

SPAN	10′, 15′, & 20′	25′	30′	35′	40′
W x D = WIDTH x DEPTH	4.0 x 4.0	4.0 x 4.0	4.0 x 4.0	4.0 x 4.0	4.0 x 4.0
CHORD-①, Unless Otherwise Shown	L 3 x 3 x 3/16 ② [4]	L 3 x 3 x 3/16 ② [4]	L 3 x 3 x 1/4 [6]	L 3 x 3 x 5/16 [6]	L 3 x 3 x 3/8 [9]
DEAD LOAD DIAGONAL-②	L 2 x 2 x 3/16 [2]	L 2 x 2 x 3/16 [2]	L 2 x 2 x 3/16 [2]	L 2 x 2 x 3/16 [2]	L 2 1/2 x 2 1/2 x 3/16 [3]
WIND LOAD DIAGONAL-②	L 2 1/2 x 2 1/2 x 3/16 [2]	L 2 1/2 x 2 1/2 x 3/16 [2]	L 2 1/2 x 2 1/2 x 3/16 [2]	L 3 x 3 x 3/16 [2]	L 3 x 3 x 3/16 [2]
DEAD LOAD VERTICAL-②	L 2 x 2 x 3/16 [2]	L 2 x 2 x 3/16 [2]	L 2 x 2 x 3/16 [2]	L 2 x 2 x 3/16 [2]	L 2 x 2 x 3/16 [2]
WIND LOAD STRUT-②	L 2 x 2 x 3/16 [1]	L 2 x 2 x 3/16 [1]	L 2 x 2 x 3/16 [1]	L 2 x 2 x 3/16 [1]	L 2 x 2 x 3/16 [1]
TRUSS DEAD LOAD	37 lb/ft	38 lb/ft	43 lb/ft	50 lb/ft	56 lb/ft
SIZE H. S. BOLTS IN CONNECTION	5/8" DIA	5/8" DIA	5/8" DIA	5/8" DIA	5/8" DIA
NO. & SIZE OF H. S. BOLTS IN CHORD		4 ~ 5/8" DIA or	6 ~ 5/8" DIA or	6 ~ 5/8" DIA or	9 ~ 5/8" DIA or
ANGLE TO TOWER CONNECTION PLATE	4 ~ 5/8" DIA ea	3 ~ 3/4" DIA ea	5 ~ 3/4" DIA ea	5 ~ 3/4" DIA ea	7 ~ 3/4" DIA ea

① "Low-Alloy Steel" for non-bridge structures per Item 442, "Metal For Structures".

② "Carbon Steel" for non-bridge structures per Item 442, "Metal For Structures".

GENERAL NOTES :

Design conforms to AASHTO 1994 Standard Specifications for Structural Supports for Highway Signs, Luminaires, and Traffic Signals and Interim Revisions thereto.

Steel for tower pipe shall conform to ASTM A53 Grade B or to ASTM A501. Tower pipe wall thickness shown is the minimum allowable. Fabricator may use the wall thickness shown or pipe of the same diameter with greater wall thickness.

All connection bolts shall conform to Item 447, "Structural Bolting". All structural steel, connection bolts, nuts and washers shall be galvanized in accordance with the Specifications.

Compensate for truss deflection at free end by offsetting upper and lower bolt holes at truss-to-tower connection.

For truss details see standard drawing COSSD.

For base and foundation details see standard drawing COSSF.

For cantilever truss lengths falling between those shown use sizes called for in the next longer span.

Truss and towers for cantilever sign supports are designed for the equivalent area of a 10′-0" deep sign panel over 100% of the span length. Design includes 3 pounds per foot squared for sign panel and 20 pounds per foot for lights and 50 pounds per foot for walkways all placed as specified for the design sign panel.

Details called for hereon are applicable for Design Wind Heights up to 30′ inclusive.

Number of High Strength bolts required in truss connection or splice are indicated in brackets, e.g. [3], after the member size.

Deflections shown include the design loads for Truss, Sign Panel, Lights and Walkways.

Texas Department of Transportation
Traffic Operations Division

CANTILEVER OVERHEAD SIGN SUPPORTS

COSS-Z4 & Z4I-10

© TxDOT November 2007

DN: TXDOT	CK: TXDOT	DW: TXDOT	CK: TXDOT
REVISIONS			
4-10			

CONT	SECT	JOB	HIGHWAY
0683	06	027	SH 45 LOOP 1
DIST		COUNTY	SHEET NO.
AUS		WILLIAMSON	650

DATE:
FILE:

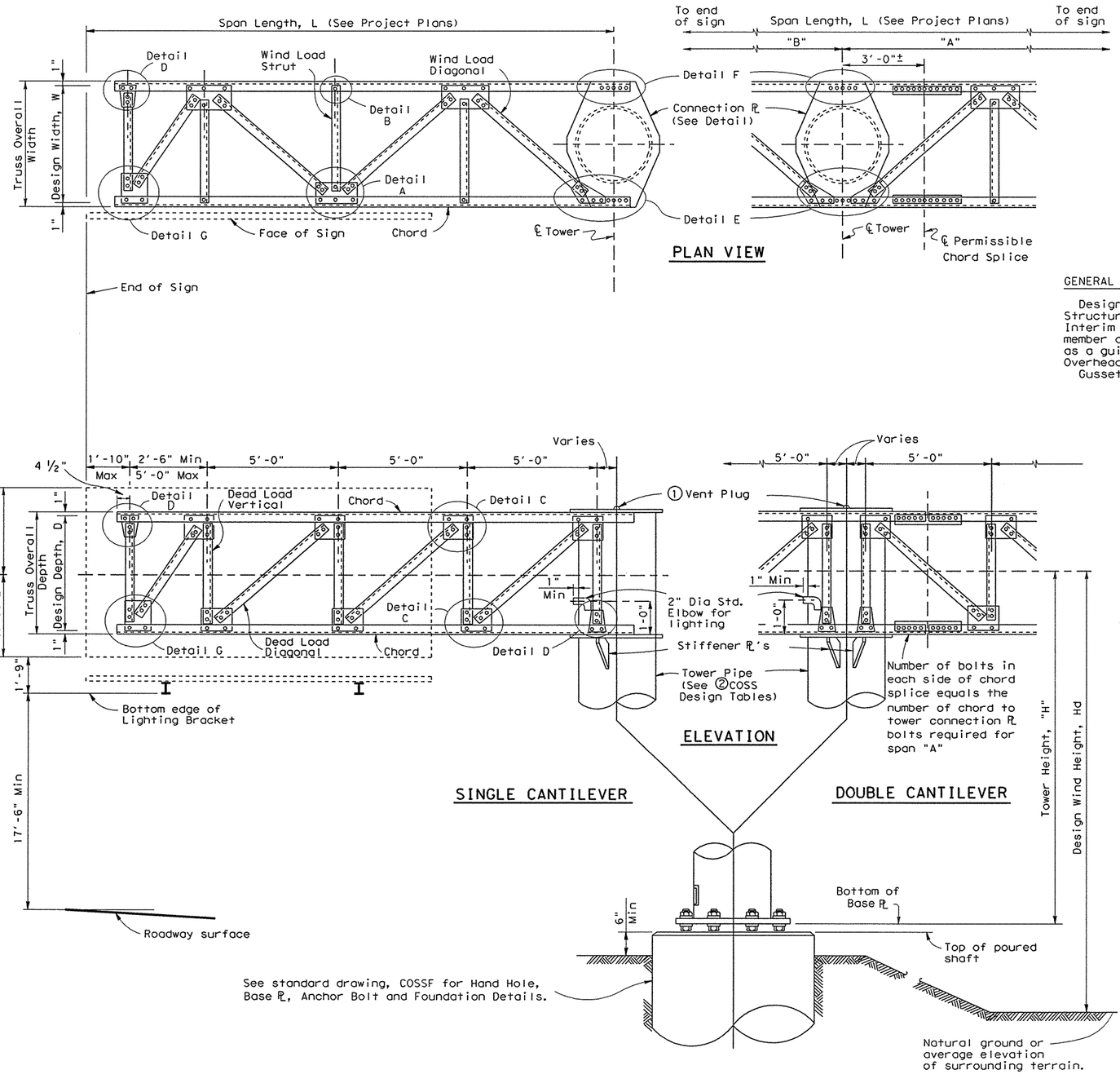

GENERAL NOTES:

Design conforms to 1975 AASHTO Standard Specifications for Structural Supports for Highway Signs, Luminaires and Traffic Signals and Interim revisions thereto. Connection details are typical only. Actual size of member and number of bolts will vary. The details on this sheet are intended as a guide only. See "Cantilever Overhead Sign Supports" or "High Level Cantilever Overhead Sign Supports" sheets for number of bolts and size of members.
Gusset plates to be same thickness as thickest web member in connection.

① Note: Cap shall be solid steel sheet ⅜" nominal thickness. Drill, tap and plug galvanizing vent. Weld plate to pipe with ⅜" weld all around.

② For COSS design tables see standard drawing, "Cantilever Overhead Sign Supports" or "High Level Cantilever Overhead Sign Supports".

DISCLAIMER:
The use of this standard is governed by the "Texas Engineering Practice Act". No warranty of any kind is made by TxDOT for any purpose whatsoever. TxDOT assumes no responsibility for the conversion of this standard to other formats or for incorrect results or damages resulting from its use.

PATH:
LEVELS DIS.

SHEET 1 OF 2

Texas Department of Transportation
Traffic Operations Division

CANTILEVER OVERHEAD SIGN SUPPORT DETAILS

COSSD

FILE: cossd.dgn	DN: TxDOT	CK: TxDOT	DW: TxDOT	CK: TxDOT
© TxDOT November 2007	DISTRICT	FEDERAL AID PROJECT		SHEET
REVISIONS	AUSTIN			651
	COUNTY		CONTROL-SECT-JOB	HIGHWAY
	WILLIAMSON		0683-06-027	IH 35 LOOP 1

66A

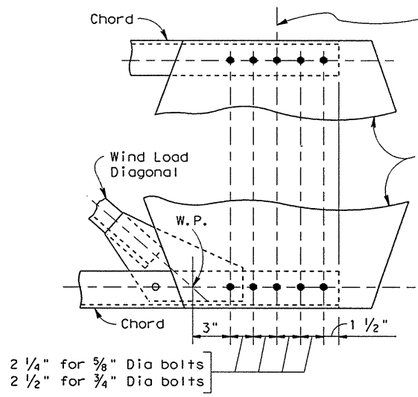

SINGLE CANTILEVER

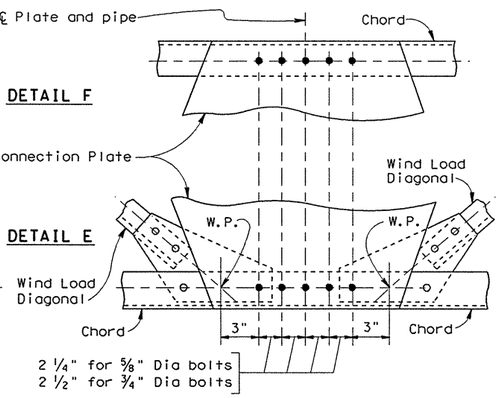

DOUBLE CANTILEVER

CONNECTION DETAILS

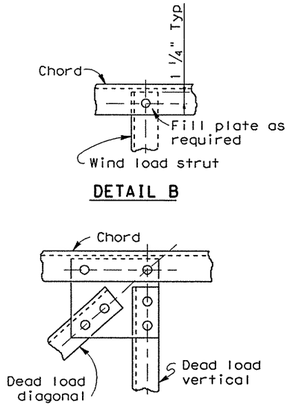

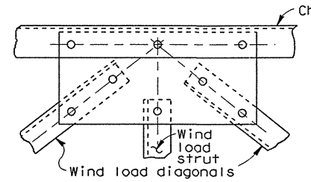

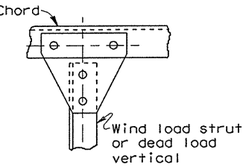

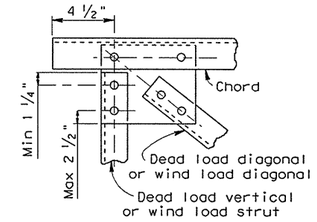

TOTAL NO. OF BOLTS IN DIAG'S. IN JOINT	NUMBER OF BOLTS REQD. IN GUSSET ℞ TO CHORD CONNECTION
0	2
2	2
3	3
4	3
5	4
6	4
8	5
10	6

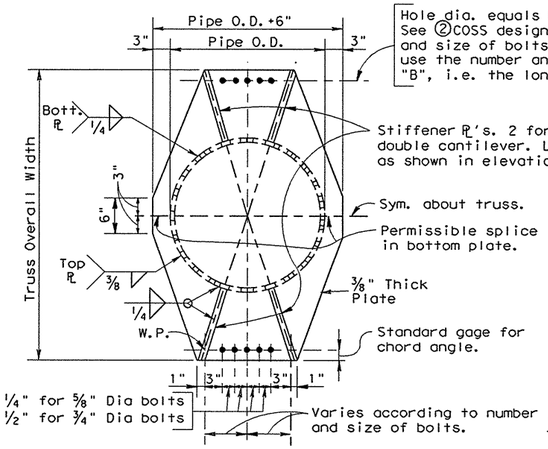

CONNECTION PLATE DETAIL

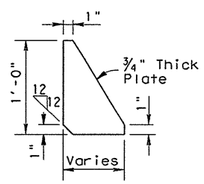

STIFFENER ℞ DETAIL

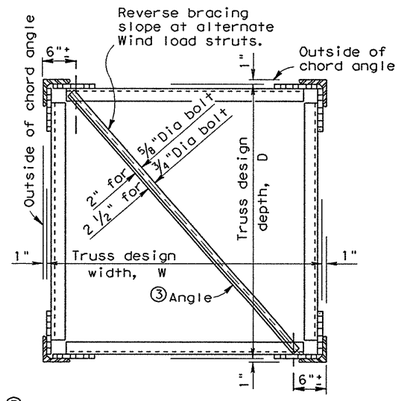

③2" x 2" x 3/16" angle for ⅝" Dia bolts [1]
2 ½" x 2" x 3/16" angle for ¾" Dia bolts [1]

TRUSS SECTION

(DIAGONALS NOT SHOWN)

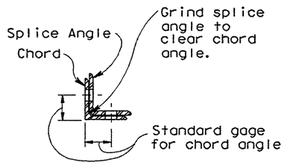

SECTION ON ℄ SPLICE

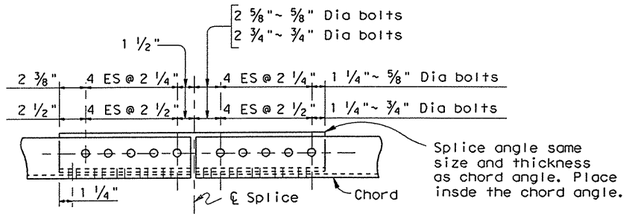

SINGLE SHEAR CHORD SPLICE

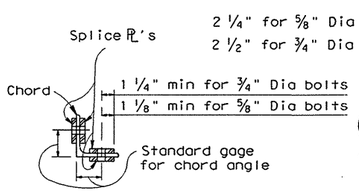

SECTION ON ℄ SPLICE

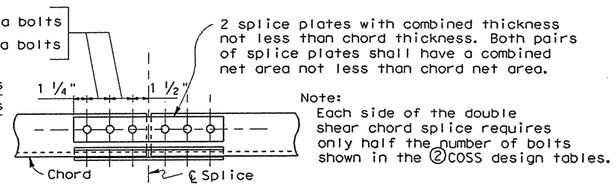

Note:
Each side of the double shear chord splice requires only half the number of bolts shown in the ②COSS design tables.

DOUBLE SHEAR CHORD SPLICE

SPLICE DETAILS

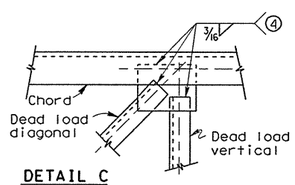

DETAIL C

(Gusset plates in other details to be similar)

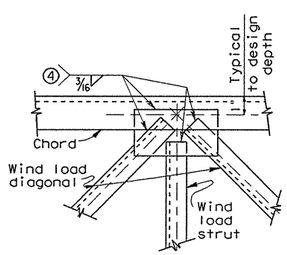

DETAIL A

ALTERNATE WELDED CONNECTION DETAILS

④MINIMUM LENGTH OF 3/16" FILLET WELD REQUIRED		
NUMBER OF BOLTS	TO REPLACE ⅝" DIA BOLTS	TO REPLACE ¾" DIA BOLTS
1	2"	3"
2	4"	6"
3	6"	9"
4	8"	11 ½"
5	10"	14 ½"
6	12"	17 ½"
7	14"	20"

DISCLAIMER:
The use of this standard is governed by the "Texas Engineering Practice Act". No warranty of any kind is made by TxDOT for any purpose whatsoever. TxDOT assumes no responsibility for the accuracy of this standard in other formats or for incorrect results or damages resulting from its use.

PATH:

LEVELS DIS.

SHEET 2 OF 2

Texas Department of Transportation
Traffic Operations Division

CANTILEVER OVERHEAD SIGN SUPPORT DETAILS

COSSD

FILE: cossd.dgn	DN: TxDOT	CK: TxDOT	DW: TxDOT	CK: TxDOT
© TxDOT November 2007	DISTRICT	FEDERAL AID PROJECT		SHEET
REVISIONS	AUSTIN			652
	COUNTY		CONTROL-SECT-JOB	HIGHWAY
	WILLIAMSON		0683-06-027	IH 35 LOOP 1

668

Washers shall conform to ASTM F436.

ANCHOR BOLT DIA. d	WASHER DIMENSIONS: OUTSIDE DIAMETER	WASHER DIMENSIONS: HOLE DIAMETER	WASHER DIMENSIONS: THICKNESS MIN.	WASHER DIMENSIONS: THICKNESS MAX.	HOLE IN BASE PLATE
1 ½" or less	2d	d + ⅛"	0.136"	0.177"	d + ¼"
1 ¾"	2d - ⅛"	d + ⅛"	0.178"	0.280"	d + 5/16"
2"	2d - ¼"	d + ⅛"	0.178"	0.280"	d + 5/16"
Over 2"	2d - ½"	d + ⅛"	0.240"	0.340"	d + 5/16"

ANCHOR BOLT SIZE: DIA	BOLT ① LENGTH	THREAD ① LENGTH	PROJECTION LENGTH	GALVAN. ① LENGTH
1 ¼"	2'-11"	5"	5 ¼"	11 ¼"
1 ⅜"	3'-1"	5 ½"	5 ¾"	11 ¾"
1 ½"	3'-4"	6"	6 ¼"	1'-0 ¼"
1 ¾"	3'-10"	7"	7 ¼"	1'-1 ¼"
2"	4'-3"	8"	8 ¼"	1'-2 ¼"
2 ¼"	4'-9"	9"	9 ¼"	1'-3 ¼"
2 ½"	5'-2"	10"	10 ¼"	1'-4 ¼"
2 ¾"	5'-8"	11"	11 ¼"	1'-5 ¼"
3"	6'-1"	1'-0"	1'-0 ¼"	1'-6 ¼"

① Anchor Bolt Fabrication Tolerances:
Bolt Length ~ ±½"
Thread Length ~ ±½"
Galvanized Length ~ -¼"

ANCHOR BOLT SIZE	PIPE OUTSIDE DIAMETER 16" BOLT CIRCLE DIA	16" DRILLED SHAFT SIZE	16" DRILLED SHAFT REINF	20" BOLT CIRCLE DIA	20" DRILLED SHAFT SIZE	20" DRILLED SHAFT REINF	24" BOLT CIRCLE DIA	24" DRILLED SHAFT SIZE	24" DRILLED SHAFT REINF	30" BOLT CIRCLE DIA	30" DRILLED SHAFT SIZE	30" DRILLED SHAFT REINF
1 ¼"Dia x 2'-11"	20 ½"	36" Dia	14-#8 (A)	24 ½"	36" Dia	14-#8 (A)						
1 ⅜"Dia x 3'-1"	20 ¾"	36" Dia	12-#9 (A)	24 ¾"	36" Dia	12-#9 (A)						
1 ½"Dia x 3'-4"	21"	36" Dia	12-#9 (A)	25"	42" Dia	14-#9 (A)	29"	42" Dia	14-#9 (C)			
1 ¾"Dia x 3'-10"	21 ½"	36" Dia	10-#10(A)	25 ⅜"	42" Dia	12-#10(B)	29 ⅜"	42" Dia	12-#10(C)	35 ⅜"	48" Dia	16-#10(C)
2"Dia x 4'-3"	22"	36" Dia	12-#10(A)	25 ¾"	42" Dia	12-#10(B)	29 ¾"	48" Dia	16-#10(C)	35 ¾"	54" Dia	18-#10(C)
2 ¼"Dia x 4'-9"	22 ½"	36" Dia	10-#11(A)	26"	42" Dia	10-#11(B)	30"	48" Dia	14-#11(C)	36"	54" Dia	14-#11(D)
2 ½"Dia x 5'-2"				26 ½"	42" Dia	12-#11(B)	30 ½"	48" Dia	16-#11(C)	36 ½"	54" Dia	16-#11(D)
2 ¾"Dia x 5'-8"							31 ½"	48" Dia	18-#11(D)	37"	54" Dia	20-#11(D)
3"Dia x 6'-1"										37 ½"	54" Dia	24-#11(D)

A = #3 Plain spiral at 6" pitch (Grade 40)
B = #4 Plain spiral at 6" pitch (Grade 40)
C = #4 Plain spiral at 6" pitch (Grade 60)
D = #4 Plain spiral at 3 ½" pitch (Grade 60)

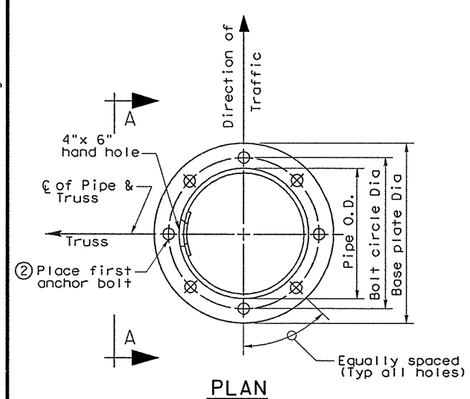

PLAN

② See "Cantilever Overhead Sign Support" or "High Level Cantilever Overhead Sign Support" sheets for number and size.

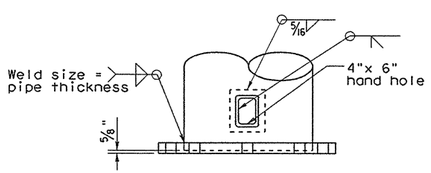

Cut 5" x 7" hole in pipe. Center 4" x 6" hand hole in ⅜" x 8" x 10" back up plate. Provide attachable cover made from section cut from pipe.

VIEW A-A

③ BASE PLATE & HANDHOLE DETAILS

③ See "Cantilever Overhead Sign Support" or "High Level Cantilever Overhead Sign Support" sheets for Diameter and thickness of base plate.

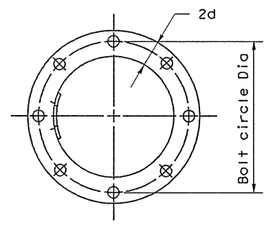

TOP VIEW OF TOP & BOTTOM TEMPLATES

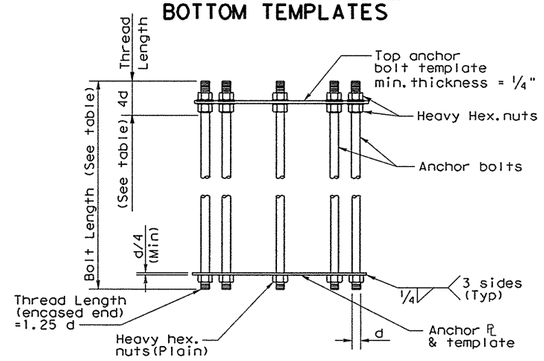

ANCHOR BOLT ASSEMBLY

(PRIOR TO INSTALLATION)

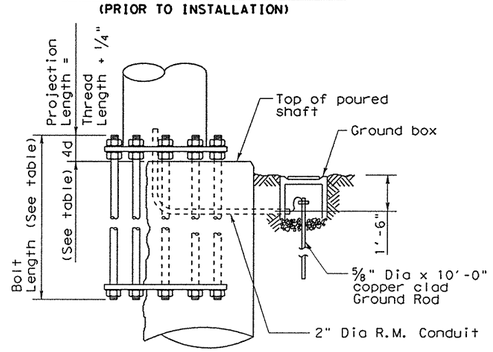

BEARING SEAT ELEVATION

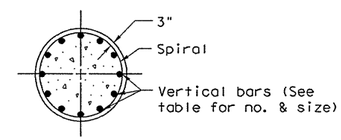

SECTION

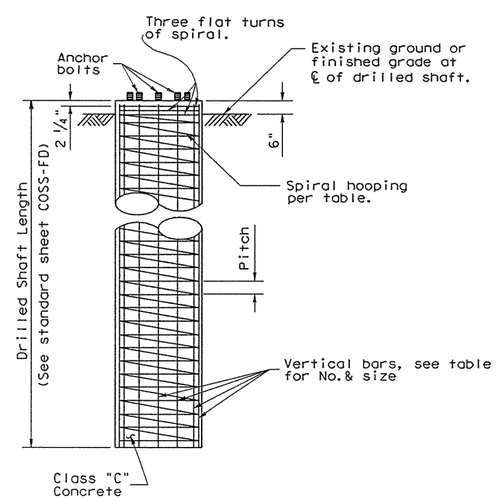

FOUNDATION DETAIL

GENERAL NOTES:

Concrete shall be Class "C".
Reinforcing shall conform to Item 440, "Reinforcing Steel".
Anchor bolts and nuts for anchor bolts shall be "Alloy Steel" per Item 449, "Anchor Bolts".
Anchor bolts shall be rigidly held in position during concrete placement using steel templates at the top and bottom. The top templates shall be removed after the concrete has set.
Lubricate and tighten anchor bolts when erecting the structure per Item 449, "Anchor Bolts". After the structure has been aligned in its final position and the anchor bolts have been properly tightened, tack weld anchor bolt nuts to washer, and tack weld washers to base plate. Galvanizing in tack welded areas shall be repaired in accordance with Item 445, "Galvanizing".
All vertical reinforcing shall be carried to the bottom of the Drilled Shaft.

DISCLAIMER:
The use of this standard is governed by the "Texas Engineering Practice Act". No warranty of any kind is made by TxDOT for any purpose whatsoever. TxDOT assumes no responsibility for the conversion of this standard to other formats or for incorrect results or damages resulting from its use.

PATH:
LEVELS DTs.

Texas Department of Transportation
Traffic Operations Division

CANTILEVER OVERHEAD SIGN SUPPORT FOUNDATION

COSSF

FILE: cossf.dgn	DN: TxDOT	CK: TxDOT	DW: TxDOT	CK: TxDOT
©TxDOT November 2007	DISTRICT	FEDERAL AID PROJECT		SHEET
REVISIONS	AUSTIN			653
	COUNTY		CONTROL-SECT-JOB	HIGHWAY
	WILLIAMSON		0683-06-027	SH 45 LOOP 1

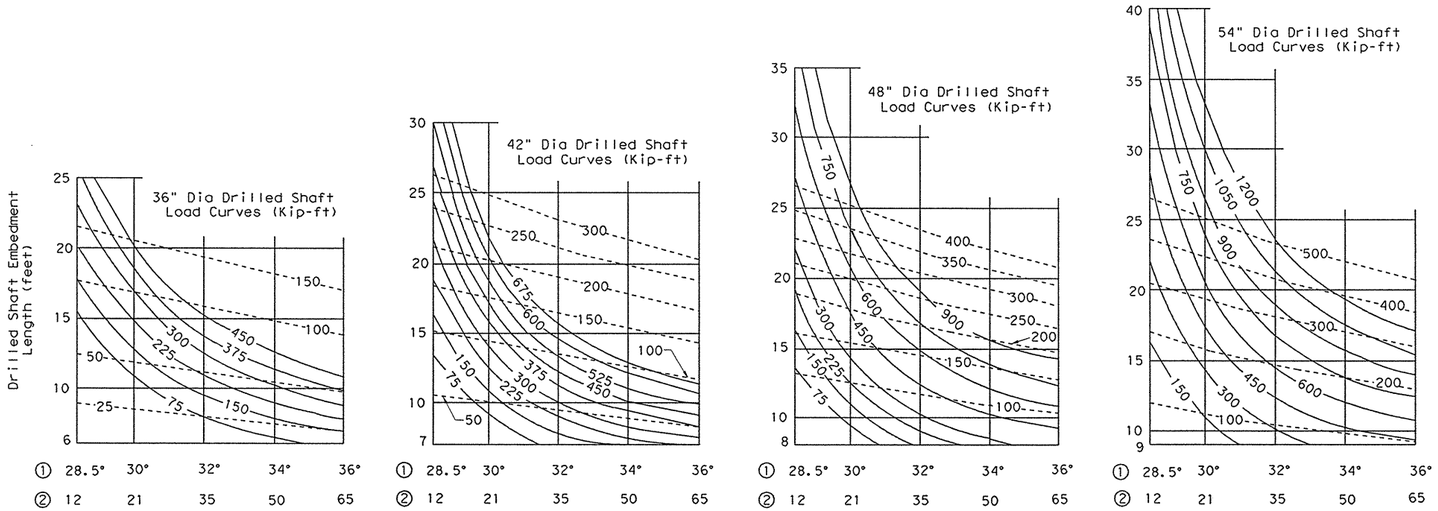

① Ø = Angle of internal friction of soil (degrees)

② N = Texas cone penetrometer value (blows per ft)

④ C(psi) = Cohesive shear strength of soil (psi)

⑤ C(psf) = Cohesive shear strength of soil (psf)

③ SUBMERGED SAND SOIL (COHESIONLESS)

Moment ————

Torsion - - - - - - - - - -

③ Note:
For unsubmerged sands and clayey sands the charts for clay soil will give a conservative foundation design.

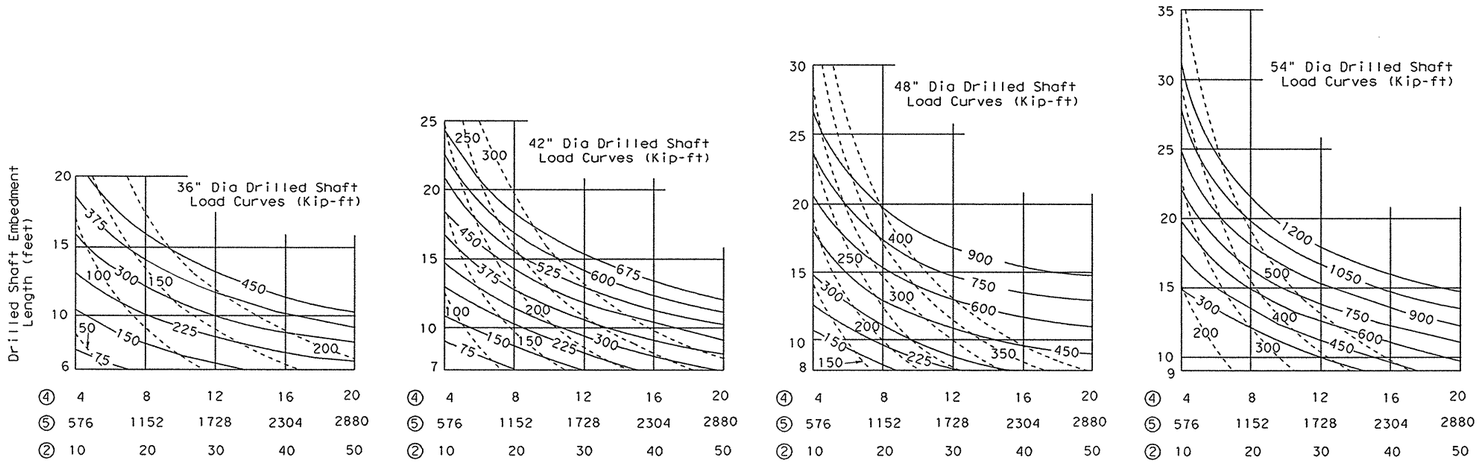

CLAY SOIL (COHESIVE)

Moment ————

Torsion - - - - - - - - - -

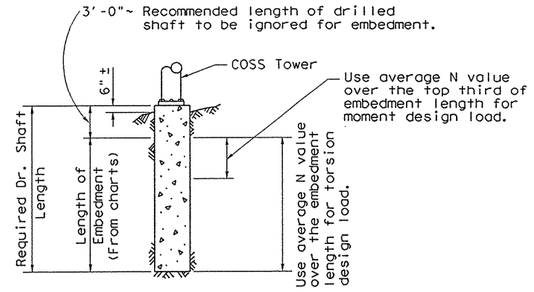

PROCEDURE:

1. Determine design moment and torsion, and the required drilled shaft diameter as outlined in the selection example sheet COSS-SE.
2. Make an initial estimate of the required embedment length.
3. From soil exploration data determine type of soil and average N value or soil property along the upper third of the drilled shaft.
4. Enter chart (for the correct shaft diameter and soil type) from the bottom at the average N value or soil property determined in step 3.
5. Proceed vertically into chart and locate intersection with design moment. Interpolate between moment curves (solid lines) as needed.
6. From intersection point turn 90° to left and read embedment length along vertical scale.
7. If embedment length differs significantly from estimated value return to step 3 with the embedment length determined in step 6.
8. From soil exploration data determine average N value or soil property over the entire length of the embedment.
9. Enter chart (for correct shaft diameter and soil type) from the bottom at the average N value or soil property determined in step 8.
10. Proceed vertically into chart and locate intersection with design torsion. Interpolate between torsion curves (dashed lines) as needed.
11. From intersection point turn 90° to left and read embedment length along vertical scale.
12. Compute the required length of drilled shaft by adding 3'-0" to longer embedment length required for moment or torsion.

GENERAL NOTES:

These charts are for use with Cantilever Overhead Sign Supports with one shaft per tower.

Solid curves are base moment in Kip-ft.

Dash curves are base torsion in Kip-ft.

Minimum embedment of drilled shaft is two diameters.

Add 3'-0" to the required embedment length to determine the required length of drilled shaft.

DISCLAIMER:
The use of this standard is governed by the "Texas Engineering Practice Act". No warranty of any kind is made by TxDOT for any purpose whatsoever. TxDOT assumes no responsibility for the conversion of this standard to other formats or for incorrect results or damages resulting from its use.

PATH:

LEVELS DIS.

Texas Department of Transportation
Traffic Operations Division

FOUNDATION EMBEDMENT SELECTION CHARTS

COSS-FD

FILE: coss-fd.dgn	DN: TxDOT	CK: TxDOT	DW: TxDOT	CK: TxDOT
© TxDOT November 2007	DISTRICT	FEDERAL AID PROJECT		SHEET
REVISIONS	AUSTIN			654
	COUNTY		CONTROL-SECT-JOB	HIGHWAY
	WILLIAMSON		0683-06-027	SH 45 LOOP 1

DATE: 4/11/2011 TIME: 11:01:54 AM

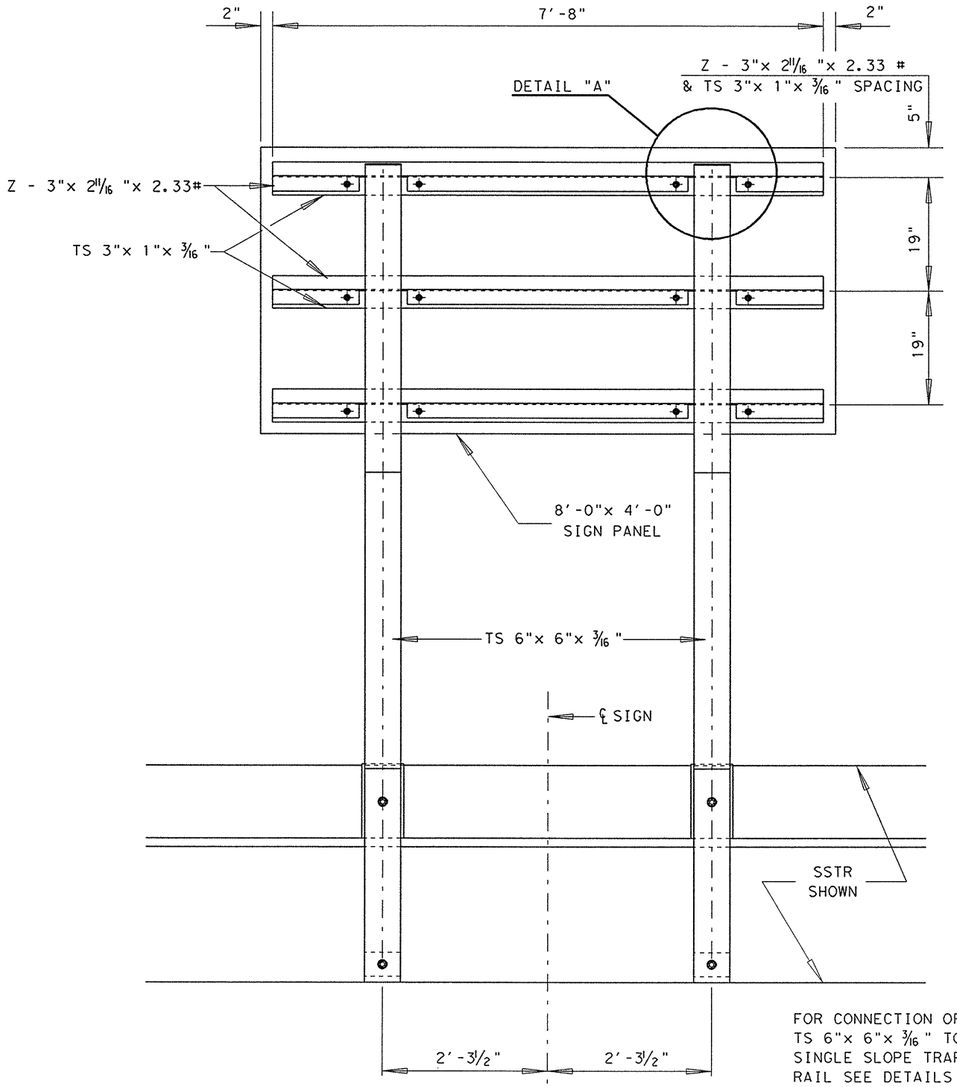

BACK VIEW

FOR CONNECTION OF TS 6"x 6"x 3/16 " TO SINGLE SLOPE TRAFFIC RAIL SEE DETAILS ON SHEET_____.

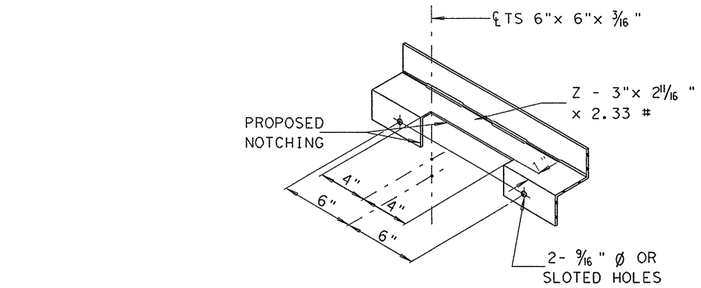

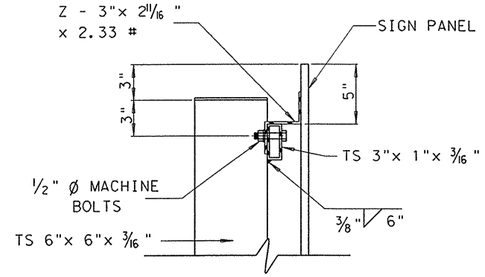

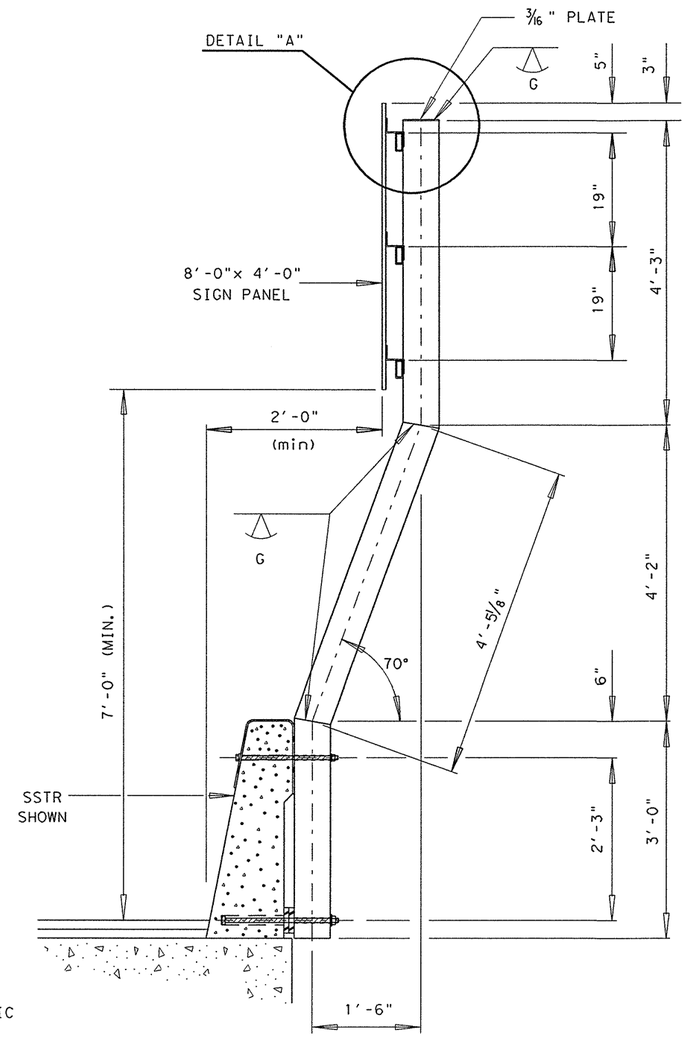

SIDE VIEW

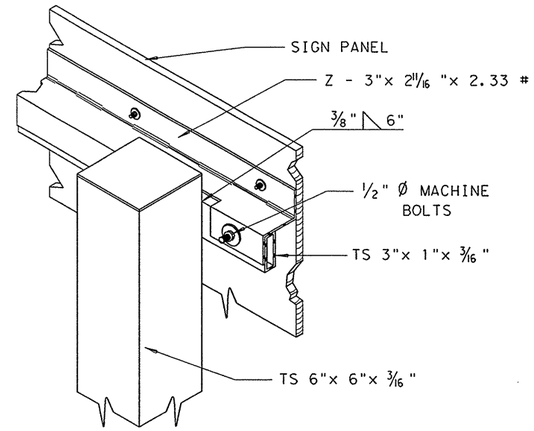

DETAIL "A"

96"x 48" SIGN MOUNT DETAIL

TS 6"x 6"x 3/16 " STEEL TUBE

STATE OF TEXAS
RENE U. GARZA
65409
REGISTERED
PROFESSIONAL ENGINEER

Rene U Garza PE
4/4/11

REV. No.	DATE	REVISION	BY
△			
△			
△			

PBSJ
an Atkins company
TBPE REG. # F-474

Texas Department of Transportation
Austin District
©2011 by TxDOT

SH 45 / O'CONNOR DRIVE SPECIAL SIGN MOUNT DETAILS

SCALE: N.T.S.

SHEET 1 OF 6

DESIGNED: CRN	FED. RD DIV. No.	STATE	PROJECT No.			HIGHWAY No.	
CHECKED: RUG	6	TEXAS				LP 1/SH 45	
DRAWN: CRN	STATE DISTRICT	COUNTY	CONTROL No.	SECTION No.	JOB No.	SHEET No.	
CHECKED: RUG	AUSTIN	WILLIAMSON	0683	06	027	655	

PLOT DRIVER: RD*11x17*PDF.plt
PEN TABLE: plotordr*ocon.tbl
FILE: r:\trans-design\o'connor\cadd\STD\PMRK*SIGNS\26*ssmd.dgn

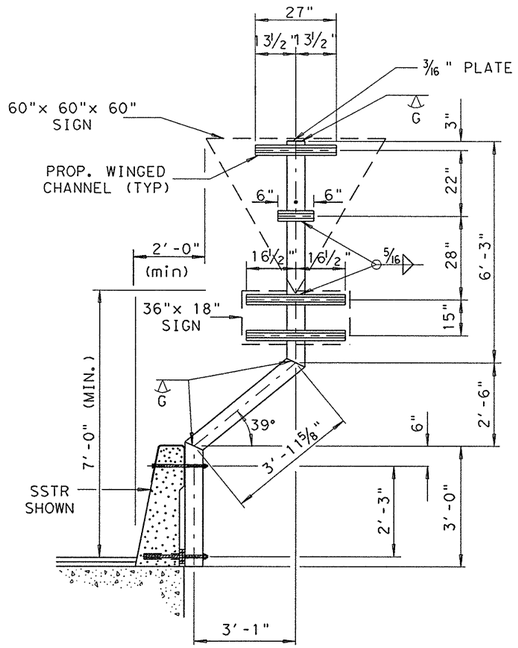

60"x 60" x 60" w/ 36"x 18" MULTI SIGN MOUNT DETAIL

TS 6"x 6"x 3/16" STEEL TUBE

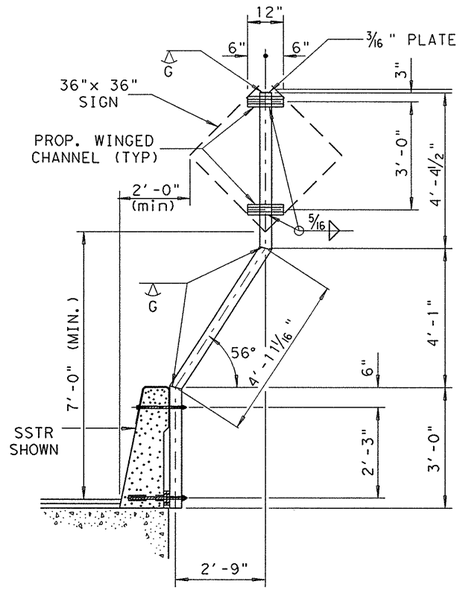

36"x 36" SIGN MOUNT DETAIL

TS 4"x 4"x 3/16" STEEL TUBE

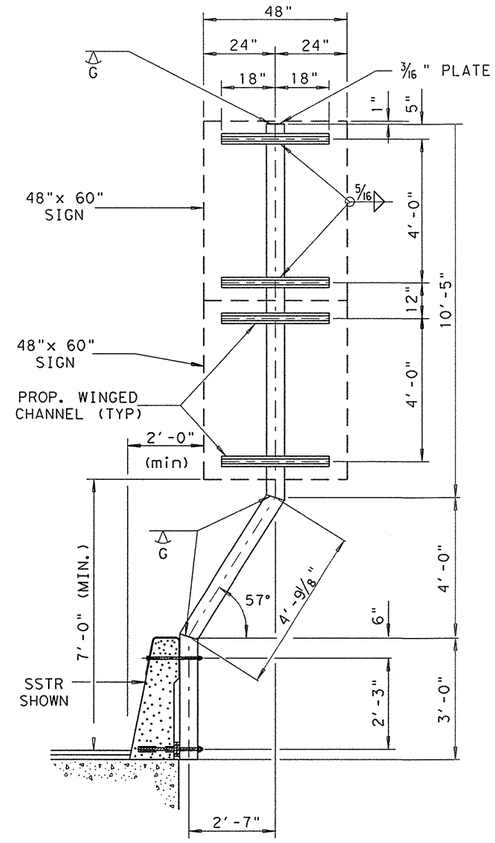

2 - 48"x 60" MULTI SIGN MOUNT DETAIL

TS 6"x 6"x 3/16" STEEL TUBE

GENERAL NOTES

1. FOR DETAILS ATTACHING SPECIAL SIGN MOUNT TO SINGLE SLOPE TRAFFIC RAIL (SSTR) AND DETAIL FOR PROPOSED WINGED CHANNEL SEE SHEET NO. _____

2. THE STEEL TUBING SHALL CONFORM TO ASTM A500. ALL WELDS SHALL BE IN ACCORDANCE WITH ITEM 441 (STEEL STRUCTURES) AND ITEM 448 (STRUCTURAL WELDING). ALL GALVANIZING SHALL BE IN ACCORDANCE WITH ITEM 442 (METAL FOR STRUCTURES).

3. WHERE THE GALVANIZING HAS BEEN SCRAPED OFF FROM THE SHIPMENT, THE STEEL TUBING, ETC. SHALL BE PAINTED WITH A GALVANIZED COMPOUND MEETING FEDERAL SPECIFICATION ASTM A-780.

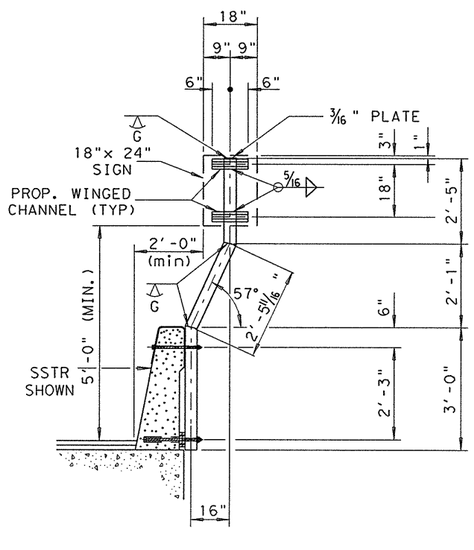

18"x 24" SIGN MOUNT DETAIL

TS 4"x 4"x 3/16" STEEL TUBE

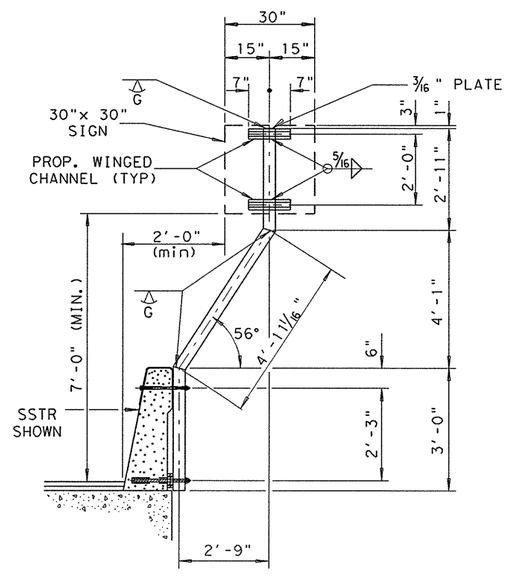

30"x 30" SIGN MOUNT DETAIL

TS 4"x 4"x 3/16" STEEL TUBE

STATE OF TEXAS
RENE U. GARZA
65409
REGISTERED PROFESSIONAL ENGINEER

Rene U. Garza PE
4/11/11

REV. NO.	DATE	REVISION	BY
△			
△			
△			

PBSJ
an Atkins company TBPE REG. # F-474

Texas Department of Transportation
Austin District
©2011 by TxDOT

SH 45 / O'CONNOR DRIVE SPECIAL SIGN MOUNT DETAILS

SCALE: N.T.S. SHEET 2 OF 6

DESIGNED: CRN	FED. RD DIV. No.	STATE	PROJECT No.			HIGHWAY No.
CHECKED: RUG	6	TEXAS				LP 1/SH 45

DRAWN: CRN	STATE DISTRICT	COUNTY	CONTROL No.	SECTION No.	JOB No.	SHEET No.
CHECKED: RUG	AUSTIN	WILLIAMSON	0683	06	027	656

DATE: 4/11/2011 TIME: 11:01:54 AM

PLOT DRIVER: RD*11x17*PDF.pltr
PEN TABLE: plotordr*ocon.tbl
FILE: r:\trans-design\o'connor\cadd\STD\PMRK*SIGNS\26*ssmd.dgn

DATE: 4/11/2011 TIME: 11:01:55 AM

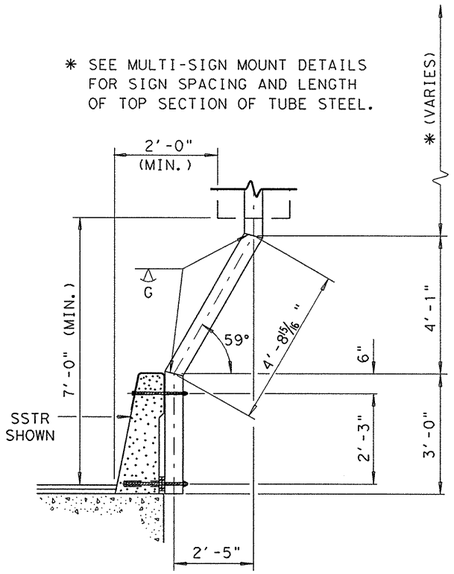

BOTTOM SECTION
MULTI-SIGN MOUNT DETAIL
TS 6"x 6"x 3/16" STEEL TUBE

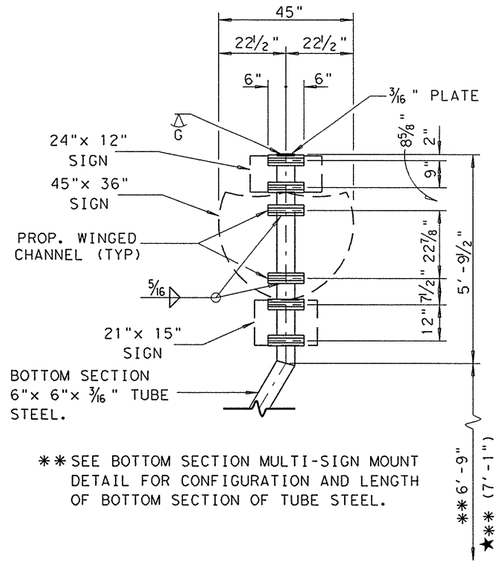

24"x 12" w/ 45"x 36" & 21"x 15"
TOP SECTION MULTI-SIGN MOUNT DETAIL
TS 6"x 6"x 3/16" STEEL TUBE

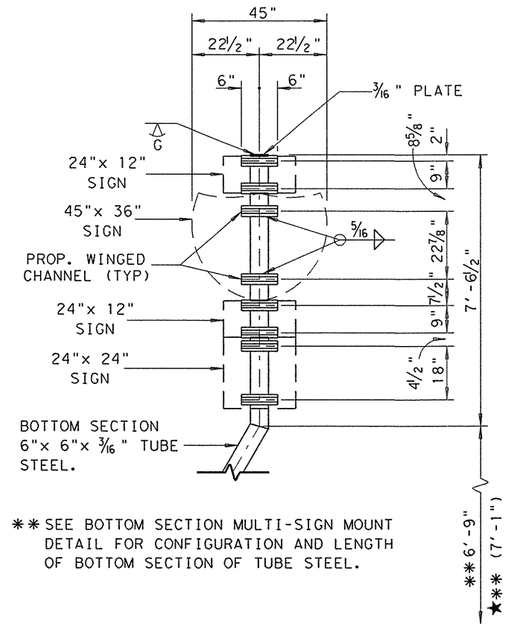

24"x 12" & 45"x 36" w/ 24"x 12" & 24"x 24"
TOP SECTION MULTI-SIGN MOUNT DETAIL
TS 6"x 6"x 3/16" STEEL TUBE

GENERAL NOTES

1. FOR DETAILS ATTACHING SPECIAL SIGN MOUNT TO SINGLE SLOPE TRAFFIC RAIL (SSTR) AND DETAIL FOR PROPOSED WINGED CHANNEL SEE SHEET NO. _____

2. THE STEEL TUBING SHALL CONFORM TO ASTM A500. ALL WELDS SHALL BE IN ACCORDANCE WITH ITEM 441 (STEEL STRUCTURES) AND ITEM 448 (STRUCTURAL WELDING). ALL GALVANIZING SHALL BE IN ACCORDANCE WITH ITEM 442 (METAL FOR STRUCTURES).

3. WHERE THE GALVANIZING HAS BEEN SCRAPED OFF FROM THE SHIPMENT, THE STEEL TUBING, ETC. SHALL BE PAINTED WITH A GALVANIZED COMPOUND MEETING FEDERAL SPEC. ASTM A-780.

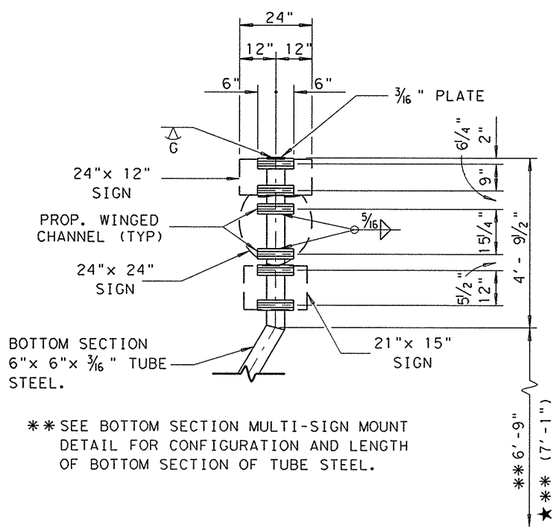

24"x 12" & 24"x 24" w/ 21"x 15"
TOP SECTION MULTI-SIGN MOUNT DETAIL
TS 6"x 6"x 3/16" STEEL TUBE

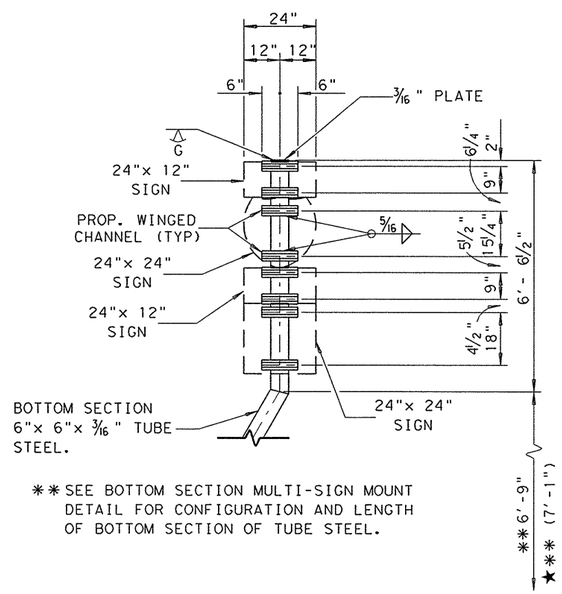

24"x 12" & 24"x 24" w/ 24"x 12" & 24"x 24"
TOP SECTION MULTI-SIGN MOUNT DETAIL
TS 6"x 6"x 3/16" STEEL TUBE

STATE OF TEXAS
RENE U. GARZA
65409
REGISTERED PROFESSIONAL ENGINEER

Rene U Garza PE
4/11/11

REV. NO.	DATE	REVISION	BY
△			
△			
△			

PBSJ an Atkins company TBPE REG. # F-474

Texas Department of Transportation
Austin District
©2011 by TxDOT

SH 45 / O'CONNOR DRIVE SPECIAL SIGN MOUNT DETAILS

SCALE: N.T.S. SHEET 3 OF 6

DESIGNED: CRN	FED. RD DIV. No.	STATE	PROJECT No.			HIGHWAY No.	
CHECKED: RUG	6	TEXAS				LP 1/SH 45	
DRAWN: CRN	STATE DISTRICT	COUNTY	CONTROL No.	SECTION No.	JOB No.	SHEET No.	
CHECKED: RUG	AUSTIN	WILLIAMSON	0683	06	027	657	

PLOT DRIVER: RD*11x17*PDF.plt
PEN TABLE: plotord*ocon.tbl
FILE: r:\trans-design\o'connor\cadd\STD\PMRK*SIGNS\26*ssmd.dgn

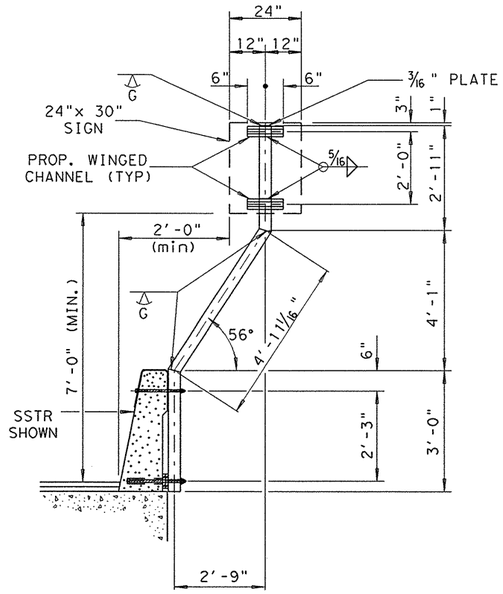

24"x 30" SIGN MOUNT DETAIL
TS 4"x 4"x 3/16" STEEL TUBE

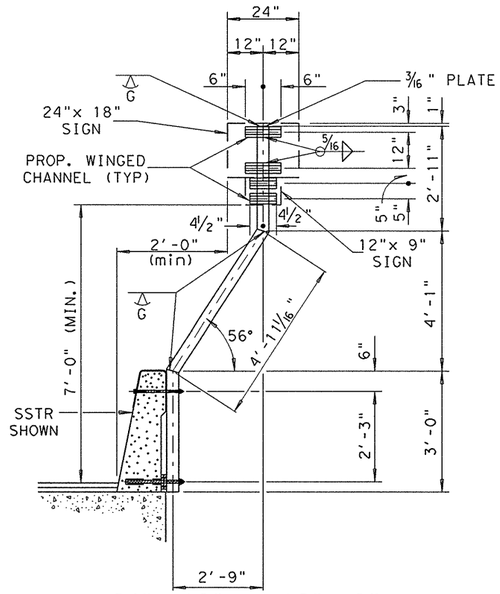

24"x 18" w/ 12"x 9"
MULTI SIGN MOUNT DETAIL
TS 4"x 4"x 3/16" STEEL TUBE

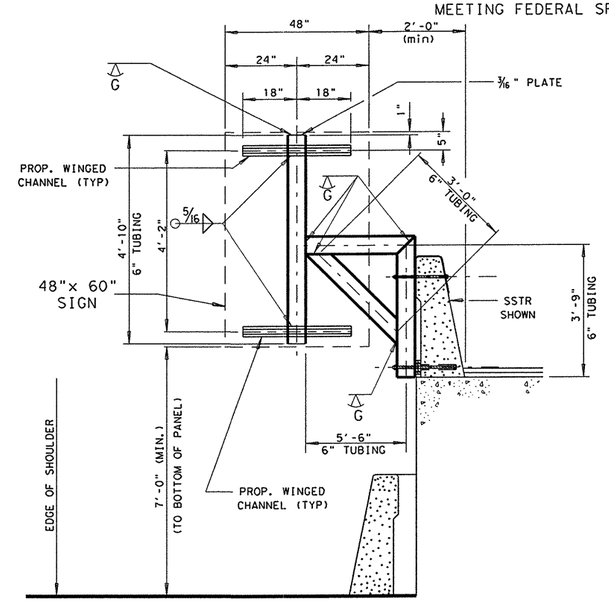

48"x 60" SIGN MOUNT DETAIL
TS 6"x 6"x 3/16" STEEL TUBE

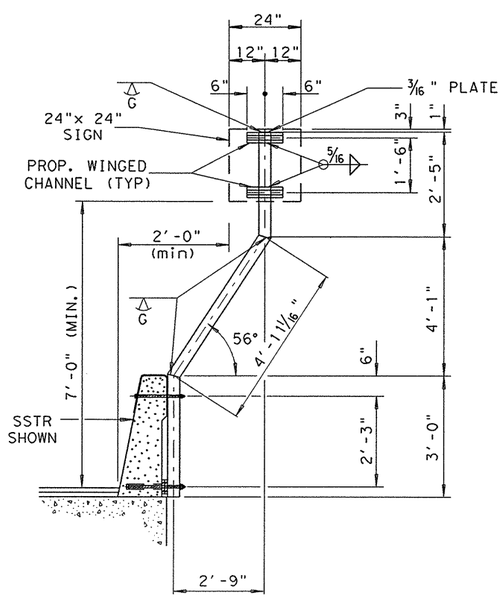

24"x 24" SIGN MOUNT DETAIL
TS 4"x 4"x 3/16" STEEL TUBE

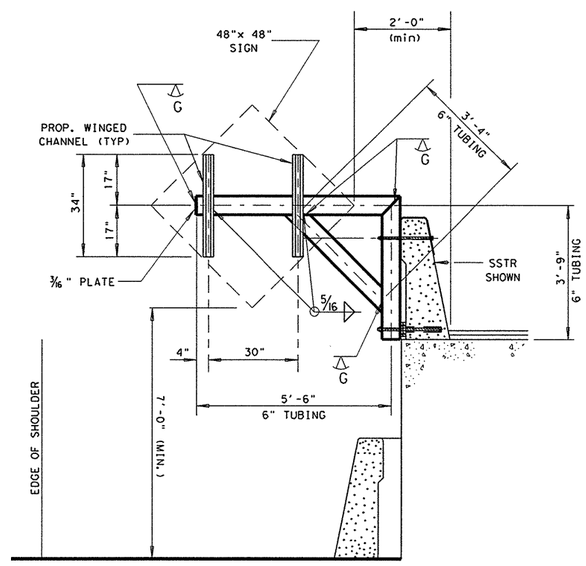

48"x 48" SIGN MOUNT DETAIL
TS 6"x 6"x 3/16" STEEL TUBE

GENERAL NOTES

1. FOR DETAILS ATTACHING SPECIAL SIGN MOUNT TO SINGLE SLOPE TRAFFIC RAIL (SSTR) AND DETAIL FOR PROPOSED WINGED CHANNEL SEE SHEET NO. _____

2. THE STEEL TUBING SHALL CONFORM TO ASTM A500. ALL WELDS SHALL BE IN ACCORDANCE WITH ITEM 441 (STEEL STRUCTURES) AND ITEM 448 (STRUCTURAL WELDING). ALL GALVANIZING SHALL BE IN ACCORDANCE WITH ITEM 442 (METAL FOR STRUCTURES).

3. WHERE THE GALVANIZING HAS BEEN SCRAPED OFF FROM THE SHIPMENT, THE STEEL TUBING, ETC. SHALL BE PAINTED WITH A GALVANIZED COMPOUND MEETING FEDERAL SPECIFICATION ASTM A-780.

STATE OF TEXAS
RENE U. GARZA
65409
REGISTERED PROFESSIONAL ENGINEER

Rene U Garza PE
4/11/11

REV. No.	DATE	REVISION	BY
△			
△			
△			

PBSJ
an Atkins company
TBPE REG. # F-474

Texas Department of Transportation
Austin District
©2011 by TxDOT

SH 45 / O'CONNOR DRIVE SPECIAL SIGN MOUNT DETAILS

SCALE: N.T.S.
SHEET 4 OF 6

DESIGNED: CRN	FED. RD DIV. No.	STATE	PROJECT No.			HIGHWAY No.
CHECKED: RUG	6	TEXAS				LP 1/SH 45
DRAWN: CRN	STATE DISTRICT	COUNTY	CONTROL No.	SECTION No.	JOB No.	SHEET No.
CHECKED: RUG	AUSTIN	WILLIAMSON	0683	06	027	658

PLOT DRIVER: RD*11x17*PDF.plt
PEN TABLE: plotordr*ocon.tbl
FILE: r:\trans-design\o'connor\cadd\STD\PMRK*SIGNS\26*ssmd.dgn
DATE: 4/11/2011 TIME: 11:01:56 AM

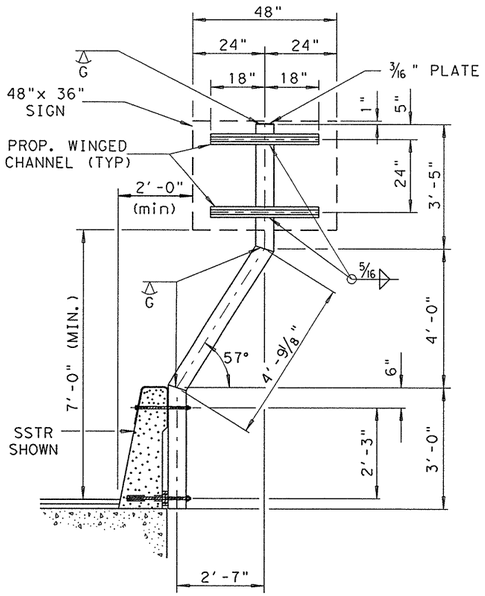

48"x 36" SIGN MOUNT DETAIL

TS 6"x 6"x 3/16 " STEEL TUBE

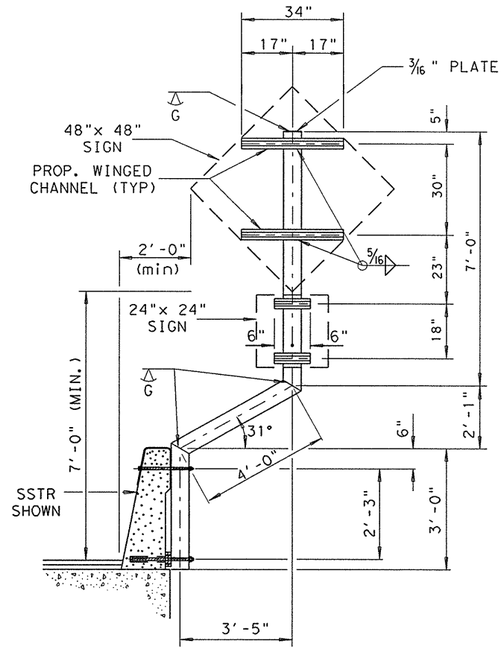

48"x 48" w/ 24"x 24" MULTI SIGN MOUNT DETAIL

TS 6"x 6"x 3/16 " STEEL TUBE

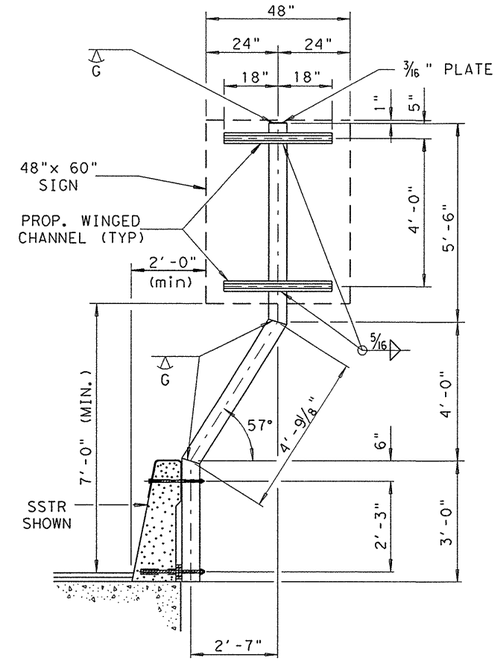

48"x 60" SIGN MOUNT DETAIL

TS 6"x 6"x 3/16 " STEEL TUBE

GENERAL NOTES

1. FOR DETAILS ATTACHING SPECIAL SIGN MOUNT TO SINGLE SLOPE TRAFFIC RAIL (SSTR) AND DETAIL FOR PROPOSED WINGED CHANNEL SEE SHEET NO. _____

2. THE STEEL TUBING SHALL CONFORM TO ASTM A500. ALL WELDS SHALL BE IN ACCORDANCE WITH ITEM 441 (STEEL STRUCTURES) AND ITEM 448 (STRUCTURAL WELDING). ALL GALVANIZING SHALL BE IN ACCORDANCE WITH ITEM 442 (METAL FOR STRUCTURES).

3. WHERE THE GALVANIZING HAS BEEN SCRAPED OFF FROM THE SHIPMENT, THE STEEL TUBING, ETC. SHALL BE PAINTED WITH A GALVANIZED COMPOUND MEETING FEDERAL SPECIFICATION ASTM A-780.

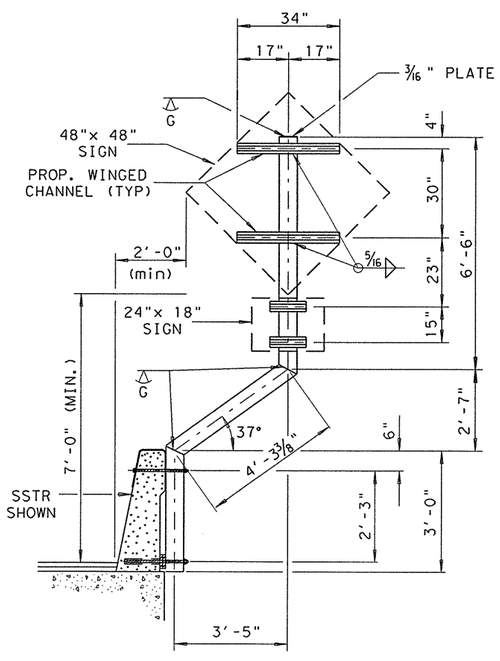

48"x 48" w/ 24"x 18" MULTI SIGN MOUNT DETAIL

TS 6"x 6"x 3/16 " STEEL TUBE

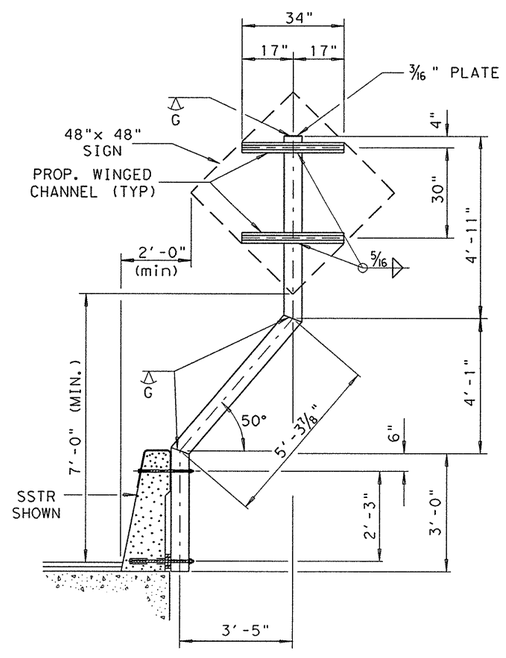

48"x 48" SIGN MOUNT DETAIL

TS 6"x 6"x 3/16 " STEEL TUBE

STATE OF TEXAS
RENE U. GARZA
65409
REGISTERED
PROFESSIONAL ENGINEER

Rene U Garza PE
4/11/11

REV. No.	DATE	REVISION	BY
△			
△			
△			

PBSJ
an Atkins company
TBPE REG. # F-474

Texas Department of Transportation
Austin District
©2011 by TxDOT

SH 45 / O'CONNOR DRIVE SPECIAL SIGN MOUNT DETAILS

SCALE: N.T.S.

SHEET 5 OF 6

DESIGNED: CRN	FED. RD DIV. No.	STATE	PROJECT No.			HIGHWAY No.
CHECKED: RUG	6	TEXAS				LP 1/SH 45
DRAWN: CRN	STATE DISTRICT	COUNTY	CONTROL No.	SECTION No.	JOB No.	SHEET No.
CHECKED: RUG	AUSTIN	WILLIAMSON	0683	06	027	659

DATE: 4/11/2011 TIME: 11:01:57 AM
PLOT DRIVER: RD*11x17*PDF.plt
PEN TABLE: plotordr*ocon.tbl
FILE: r:\trans-design\o'connor\cadd\STD\PMRK*SIGNS\26*ssmd.dgn

ANCHOR BOLTS			
	BOLT LENGTH		
	BOLT A	BOLT B	BOLT C
4" TUBING	14 1/2"	12"	20"
6" TUBING	16 1/2"	14"	22"

ANCHOR BOLT "A" SHALL BE 5/8" Ø AND ANCHOR BOLT "B" SHALL BE 3/4" Ø. BOTH ANCHOR BOLTS SHALL BE ASTM A325 WITH HEX HEAD, PLAIN WASHERS, LOCK WASHERS, SPACER, SPACER PLATE AND NUT.

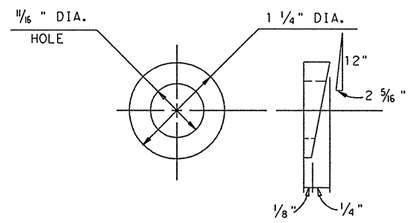

H.S. METAL SPACER DETAIL

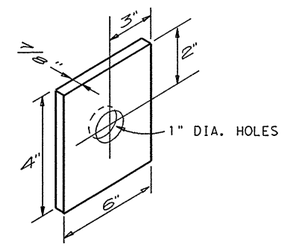

MIDDLE SPACER PLATE DETAIL

4"× 6"× 7/8"

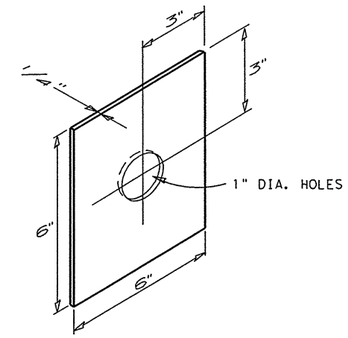

OUTER SPACER PLATE DETAIL

6"× 6"× 7/8"

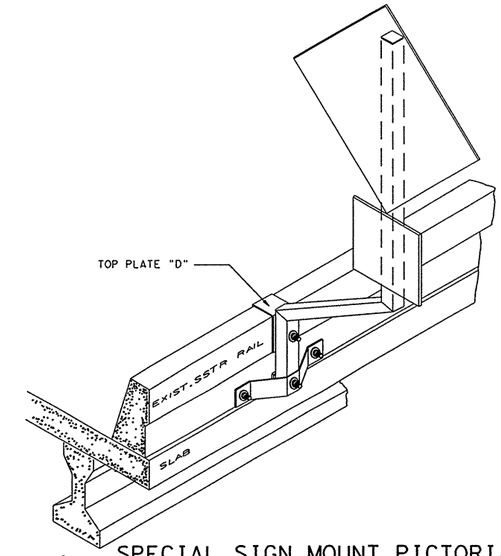

SPECIAL SIGN MOUNT PICTORIAL

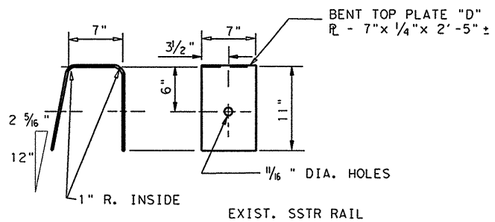

TOP PLATE "D" DETAIL

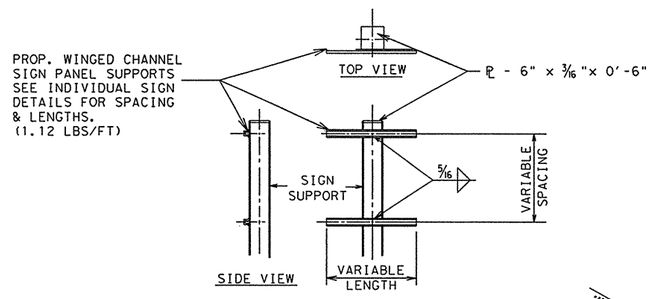

WINGED CHANNEL DETAIL

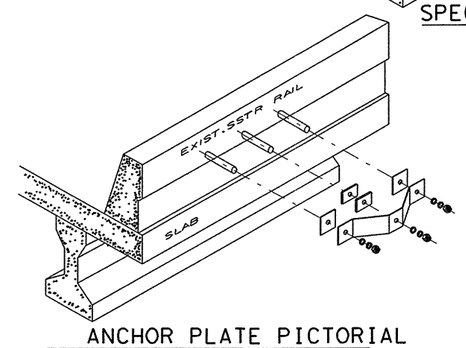

ANCHOR PLATE PICTORIAL

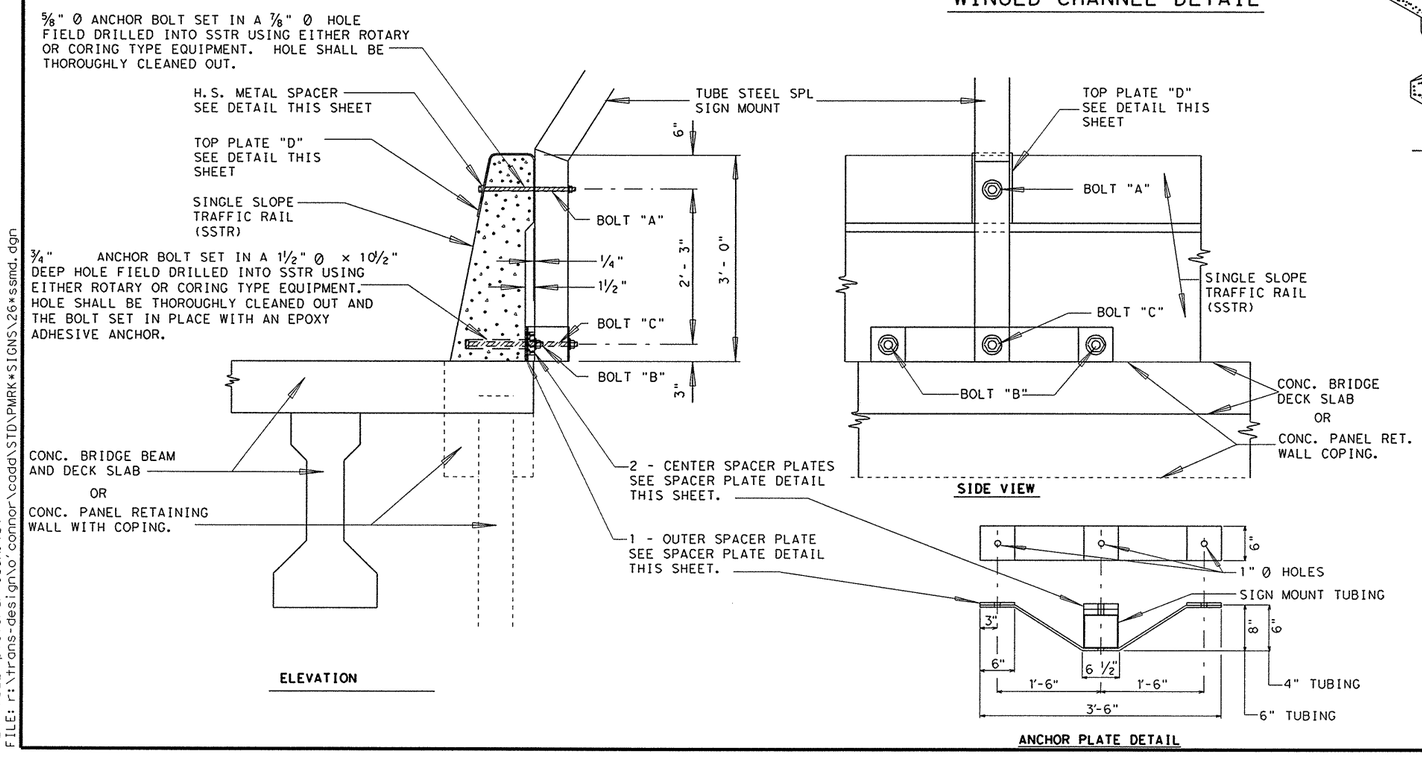

THE STEEL TUBING SHALL CONFORM TO ASTM A500 AND ALL NUTS AND BOLTS, ETC. SHALL CONFORM TO ASTM A193-B7 OR A687, THREADS FOR BOLTS AND NUTS SHALL BE 8 UN THREADS. ALL STEEL PLATES SHALL CONFORM TO ASTM A36. ALL WELDS SHALL BE IN ACCORDANCE WITH ITEM 441 (STEEL STRUCTURES) AND ITEM 448(STRUCTURAL WELDING). THE PLATES, NUTS AND BOLTS ETC. SHALL BE GALVANIZED IN ACCORDANCE WITH ITEM 442 (METAL FOR STRUCTURES).

WHERE THE GALVANIZING HAS BEEN SCRAPED OFF FROM SHIPMENT, THE STEEL TUBING, ETC. SHALL BE PAINTED WITH A GALVANIZED COMPOUND MEETING FEDERAL SPECIFICATION ASTM A-780.

FOR PAYMENT, ALL TUBING, PLATE, CHANNELS, BOLTS, NUTS WASHERS ETC. USED FOR THE ERECTION OF THE SPECIAL SIGN MOUNT WILL NOT BE PAID FOR SEPERATELY, BUT SHALL BE CONSIDERED SUBSIDIARY TO THE ITEM 646 "SMALL ROAD SIDE TRAFFIC SUPPORTS".

☆ EPOXY ADHESIVE ANCHOR SYSTEM/INSTALLATION SHALL BE APPROVED BY THE ENGINEER.

SINGLE SLOPE TRAFFIC RAIL

STATE OF TEXAS
RENE U. GARZA
65409
REGISTERED PROFESSIONAL ENGINEER

Rene U. Garza PE
4/11/11

REV. NO.	DATE	REVISION	BY
△			
△			
△			

PBSJ
an Atkins company
TBPE REG. # F-474

Texas Department of Transportation
Austin District
©2011 by TxDOT

SH 45 / O'CONNOR DRIVE SPECIAL SIGN MOUNT DETAILS

SCALE: N.T.S.

SHEET 6 OF 6

DESIGNED: CRN	FED. RD DIV. No.	STATE	PROJECT No.		HIGHWAY No.	
CHECKED: RUG	6	TEXAS			LP 1/SH 45	
DRAWN: CRN	STATE DISTRICT	COUNTY	CONTROL No.	SECTION No.	JOB No.	SHEET No.
CHECKED: RUG	AUSTIN	WILLIAMSON	0683	06	027	660

DATE: 4/11/2011 TIME: 11:01:58 AM

PLOT DRIVER: RD*11x17*PDF.plt
PEN TABLE: plotdrv*ocon.tbl
FILE: r:\trans-design\o'connor\cadd\STD\PMRK*SIGNS\26*ssmd.dgn

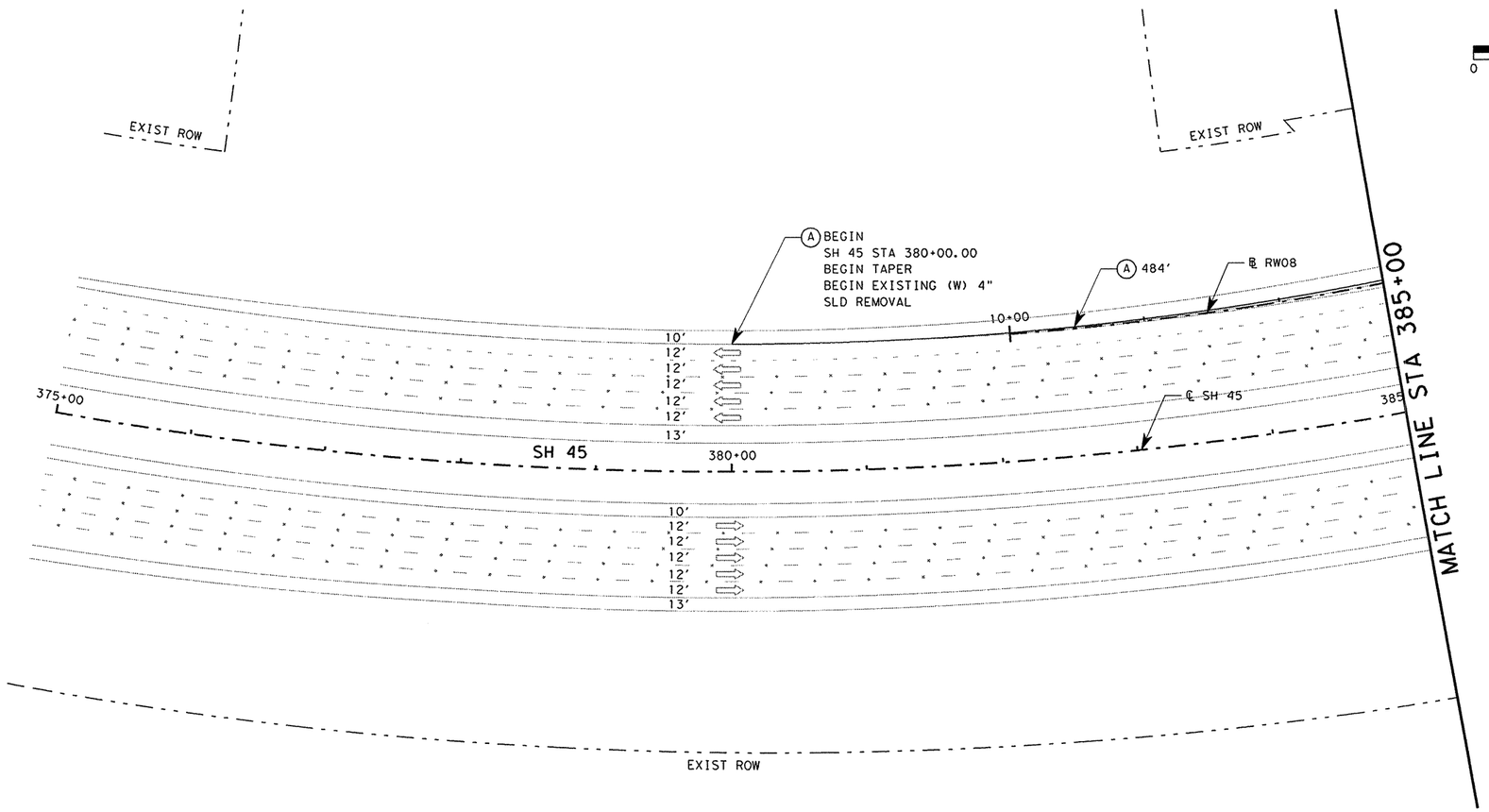

0 25 50 100

LEGEND

- (A) REFL PAV MRK TY I & II (W)(4")(SLD)
- (B) REFL PAV MRK TY I & II (W)(4")(BRK)
- (C) REFL PAV MRK TY I & II (W)(8")(SLD)
- (D) REFL PAV MRK TY I & II (W)(12")(LNDP)
- (E) REFL PAV MRK TY I & II (W)(12")(SLD)
- (F) REFL PAV MRK TY I & II (W)(24")(SLD)
- (G) REFL PAV MRK TY I & II (W)(ARROW)
- (H) REFL PAV MRK TY I & II (W)(DBL ARROW)
- (I) REFL PAV MRK TY I & II (W)(WORD)
- (J) REFL PAV MRK TY I & II (W)(8")(DOT)
- (K) REFL PAV MRK TY I & II (Y)(4")(SLD)
- (L) REFL PAV MRK TY I & II (Y)(4")(BRK)
- (M) REFL PAV MRK TY I & II (Y)(12")(SLD)
- (N) REFL PAV MRK TY I & II (Y)(MED NOSE)
- (O) RAIS PAV MRKR CL B (REFL) TY I-A
- (P) RAIS PAV MRKR CL B (REFL) TY I-R
- (Q) RAIS PAV MRKR CL B (REFL) TY II-A-A
- (R) RAIS PAV MRKR CL B (REFL) TY II-C-R
- (S) REFL PAV MRK TY I & II (W)(18")(YLD TRI)
- (T) REFL PAV MRK TY I & II (W)(36")(YLD TRI)
- (U) PREFAB PAV MRK TY B (W)(7") BRK CNTST
- ⇦ EXISTING TRAFFIC DIRECTION/TRAVEL LANE

STATE OF TEXAS
RENE U. GARZA
65409
REGISTERED
PROFESSIONAL ENGINEER

Rene U Garza PE
4/11/11

PAVEMENT MARKINGS SUMMARY

ITEM	DESC	DESCRIPTION	UNIT	QTY	ITEM	DESC	DESCRIPTION	UNIT	QTY
666	2003	REFL PAV MRK TY I (W) 4" (BRK)(100MIL)	LF	0	666	2154	REF PAV MRK TY II (W) 12" (LNDP)	LF	0
666	2012	REFL PAV MRK TY I (W) 4" (SLD)(100MIL)	LF	484	666	2155	REF PAV MRK TY II (W) 12" (SLD)	LF	0
666	2030	REFL PAV MRK TY I (W) 8" (DOT)(100MIL)	LF	0	666	2157	REF PAV MRK TY II (W) 24" (SLD)	LF	0
666	2036	REFL PAV MRK TY I (W) 8" (SLD)(100MIL)	LF	0	666	2160	REF PAV MRK TY II (W) (ARROW)	EA	0
666	2039	REFL PAV MRK TY I (W) 12"(LNDP)(100MIL)	LF	0	666	2165	REF PAV MRK TY II (W) (DBL ARROW)	EA	0
666	2042	REFL PAV MRK TY I (W) 12"(SLD)(100MIL)	LF	0	666	2173	REF PAV MRK TY II (W) (WORD)	EA	0
666	2048	REFL PAV MRK TY I (W) 24"(SLD)(100MIL)	LF	0	666	2175	REF PAV MRK TY II (W) 36" (YLD TRI)	EA	0
666	2054	REFL PAV MRK TY I (W) (ARROW) (100MIL)	EA	0	666	2178	REF PAV MRK TY II (Y) 4" (SLD)	LF	0
666	2069	REFL PAV MRK TY I(W)(DBL ARROW)(100MIL)	EA	0	666	2183	REF PAV MRK TY II (Y) 12" (SLD)	LF	0
666	2096	REFL PAV MRK TY I (W) (WORD) (100MIL)	EA	0	666	2188	REF PAV MRK TY II (Y) (MED NOSE)	EA	0
666	2102	REFL PAV MRK TY I (W)36"(YLD TRI)(100MIL)	EA	0	668	2137	PREFAB PAV MRK TY B (W)(7")BRK CNTST	LF	0
666	2111	REFL PAV MRK TY I (Y) 4" (SLD)(100MIL)	LF	0	672	2014	REFL PAV MRKR TY I-R	EA	0
666	2126	REFL PAV MRK TY I (Y) 12"(SLD)(100MIL)	LF	0	672	2017	REFL PAV MRKR TY II-C-R	EA	0
666	2141	REFL PAV MRK TY I (Y)(MED NOSE)(100MIL)	EA	0	677	2001	ELIM EXT PAV MRK & MRKS (4")	LF	484
666	2142	REF PAV MRK TY II (W) 4" (BRK)	LF	0	677	2003	ELIM EXT PAV MRK & MRKS (8")	LF	0
666	2145	REF PAV MRK TY II (W) 4" (SLD)	LF	484	677	2005	ELIM EXT PAV MRK & MRKS (12")	LF	0
666	2151	REF PAV MRK TY II (W) 8" (DOT)	LF	0	677	2007	ELIM EXT PAV MRK & MRKS (24")	LF	0
666	2153	REF PAV MRK TY II (W) 8" (SLD)	LF	0	677	2008	ELIM EXT PAV MRK & MRKS (ARROW)	EA	0

REV. No.	DATE	REVISION	BY
△			
△			
△			

PBSJ
an Atkins company
TBPE REG. # F-474

Texas Department of Transportation
Austin District
©2011 by TxDOT

SH 45 / O'CONNOR DRIVE
PAVEMENT MARKING LAYOUT
SH 45
STA 375+00 TO 385+00

SCALE: 1"=100'

SHEET 1 OF 8

DESIGNED: EG	FED. RD DIV. No.	STATE	PROJECT No.			HIGHWAY No.
CHECKED: SED	6	TEXAS				LP 1/SH 45
DRAWN: EG	STATE DISTRICT	COUNTY	CONTROL No.	SECTION No.	JOB No.	SHEET No.
CHECKED: SED	AUSTIN	WILLIAMSON	0683	06	027	661

DATE: 4/11/2011 TIME: 11:02:00 AM

PLOT DRIVER: RD*11x17*PDF.plt
PEN TABLE: plotdrv*ocon.tbl
FILE: r:\trans-design\o'connor\cadd\SNS\OC45PM01.dgn

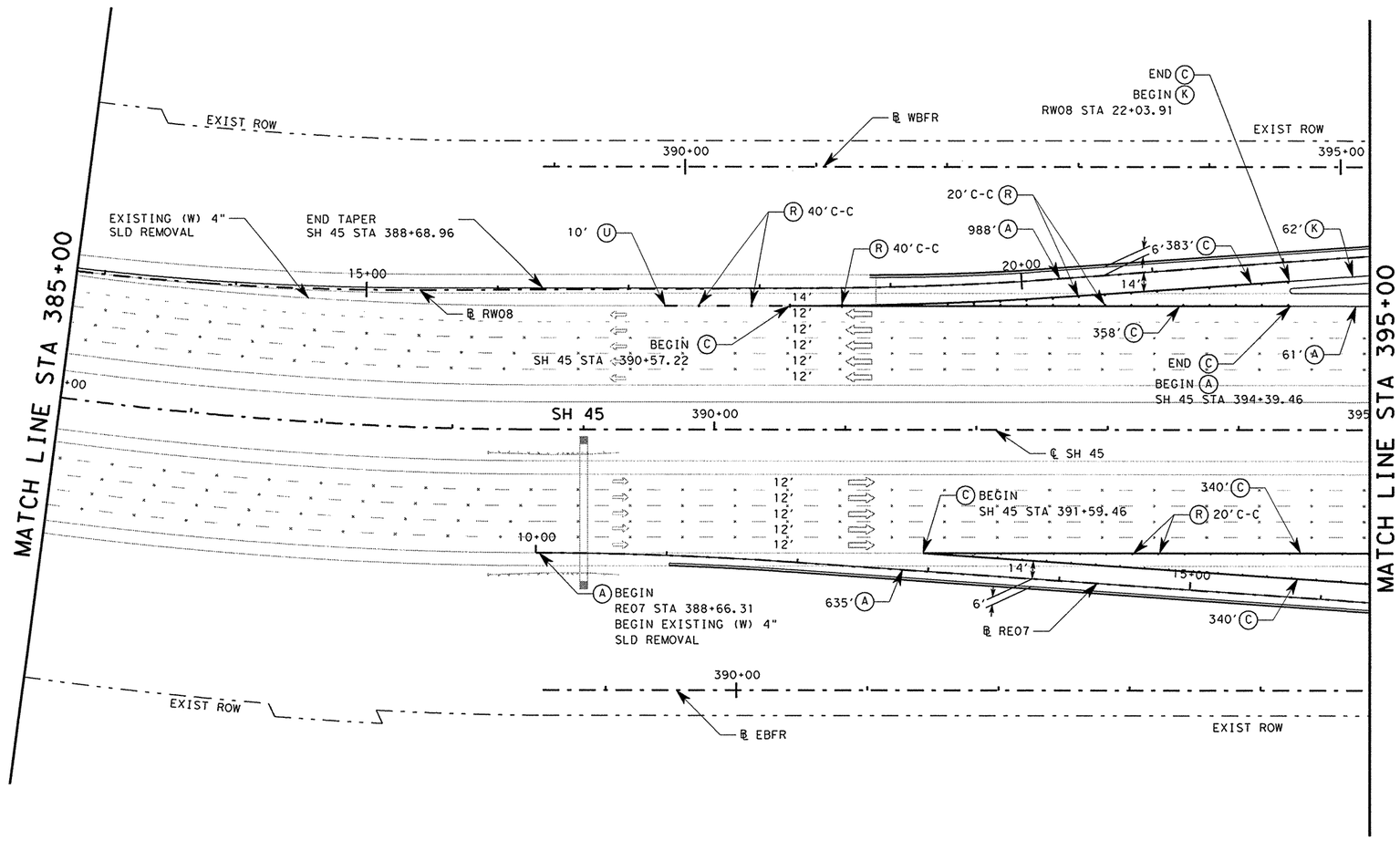

LEGEND

- (A) REFL PAV MRK TY I & II (W)(4")(SLD)
- (B) REFL PAV MRK TY I & II (W)(4")(BRK)
- (C) REFL PAV MRK TY I & II (W)(8")(SLD)
- (D) REFL PAV MRK TY I & II (W)(12")(LNDP)
- (E) REFL PAV MRK TY I & II (W)(12")(SLD)
- (F) REFL PAV MRK TY I & II (W)(24")(SLD)
- (G) REFL PAV MRK TY I & II (W)(ARROW)
- (H) REFL PAV MRK TY I & II (W)(DBL ARROW)
- (I) REFL PAV MRK TY I & II (W)(WORD)
- (J) REFL PAV MRK TY I & II (W)(8")(DOT)
- (K) REFL PAV MRK TY I & II (Y)(4")(SLD)
- (L) REFL PAV MRK TY I & II (Y)(4")(BRK)
- (M) REFL PAV MRK TY I & II (Y)(12")(SLD)
- (N) REFL PAV MRK TY I & II (Y)(MED NOSE)
- (O) RAIS PAV MRKR CL B (REFL) TY I-A
- (P) RAIS PAV MRKR CL B (REFL) TY I-R
- (Q) RAIS PAV MRKR CL B (REFL) TY II-A-A
- (R) RAIS PAV MRKR CL B (REFL) TY II-C-R
- (S) REFL PAV MRK TY I & II (W)(18")(YLD TRI)
- (T) REFL PAV MRK TY I & II (W)(36")(YLD TRI)
- (U) PREFAB PAV MRK TY B (W)(7") BRK CNTST
- ⇦ EXISTING TRAFFIC DIRECTION/TRAVEL LANE

0 25 50 100

STATE OF TEXAS
RENE U. GARZA
65409
REGISTERED
PROFESSIONAL ENGINEER

Rene U Garza PE
4/11/11

PAVEMENT MARKINGS SUMMARY

ITEM	DESC	DESCRIPTION	UNIT	QTY	ITEM	DESC	DESCRIPTION	UNIT	QTY
666	2003	REFL PAV MRK TY I (W) 4" (BRK)(100MIL)	LF	0	666	2154	REF PAV MRK TY II (W) 12" (LNDP)	LF	0
666	2012	REFL PAV MRK TY I (W) 4" (SLD)(100MIL)	LF	1684	666	2155	REF PAV MRK TY II (W) 12" (SLD)	LF	0
666	2030	REFL PAV MRK TY I (W) 8" (DOT)(100MIL)	LF	0	666	2157	REF PAV MRK TY II (W) 24" (SLD)	LF	0
666	2036	REFL PAV MRK TY I (W) 8" (SLD)(100MIL)	LF	1421	666	2160	REF PAV MRK TY II (W) (ARROW)	EA	0
666	2039	REFL PAV MRK TY I (W) 12"(LNDP)(100MIL)	LF	0	666	2165	REF PAV MRK TY II (W) (DBL ARROW)	EA	0
666	2042	REFL PAV MRK TY I (W) 12"(SLD)(100MIL)	LF	0	666	2173	REF PAV MRK TY II (W) (WORD)	EA	0
666	2048	REFL PAV MRK TY I (W) 24"(SLD)(100MIL)	LF	0	666	2175	REF PAV MRK TY II (W) 36" (YLD TRI)	EA	0
666	2054	REFL PAV MRK TY I (W) (ARROW) (100MIL)	EA	0	666	2178	REF PAV MRK TY II (Y) 4" (SLD)	LF	62
666	2069	REFL PAV MRK TY I(W)(DBL ARROW)(100MIL)	EA	0	666	2183	REF PAV MRK TY II (Y) 12" (SLD)	LF	0
666	2096	REFL PAV MRK TY I (W) (WORD) (100MIL)	EA	0	666	2188	REF PAV MRK TY II (Y) (MED NOSE)	EA	0
666	2102	REF PAV MRK TY I (W) 36" (YLD TRI) (100MIL)	EA	0	668	2137	PREFAB PAV MRK TY B (W)(7")BRK CNTST	LF	30
666	2111	REFL PAV MRK TY I (Y) 4" (SLD)(100MIL)	LF	62	672	2014	REFL PAV MRKR TY I-R	EA	0
666	2126	REFL PAV MRK TY I (Y) 12"(SLD)(100MIL)	LF	0	672	2017	REFL PAV MRKR TY II-C-R	EA	67
666	2141	REFL PAV MRK TY I (Y)(MED NOSE)(100MIL)	EA	0	677	2001	ELIM EXT PAV MRK & MRKS (4")	LF	1625
666	2142	REF PAV MRK TY II (W) 4" (BRK)	LF	0	677	2003	ELIM EXT PAV MRK & MRKS (8")	LF	0
666	2145	REF PAV MRK TY II (W) 4" (SLD)	LF	1684	677	2005	ELIM EXT PAV MRK & MRKS (12")	LF	0
666	2151	REF PAV MRK TY II (W) 8" (DOT)	LF	0	677	2007	ELIM EXT PAV MRK & MRKS (24")	LF	0
666	2153	REF PAV MRK TY II (W) 8" (SLD)	LF	1421	677	2008	ELIM EXT PAV MRK & MRKS (ARROW)	EA	0

REV. No.	DATE	REVISION	BY
△			
△			
△			

PBSJ an Atkins company TBPE REG. # F-474

Texas Department of Transportation
Austin District
©2011 by TxDOT

SH 45 / O'CONNOR DRIVE PAVEMENT MARKING LAYOUT SH 45 STA 385+00 TO 395+00

SCALE: 1"=100' SHEET 2 OF 8

DESIGNED: EG	FED. RD DIV. No.	STATE	PROJECT No.			HIGHWAY No.
CHECKED: SED	6	TEXAS				LP 1/SH 45
DRAWN: EG	STATE DISTRICT	COUNTY	CONTROL No.	SECTION No.	JOB No.	SHEET No.
CHECKED: SED	AUSTIN	WILLIAMSON	0683	06	027	662

DATE: 4/11/2011 TIME: 11:02:02 AM

PLOT DRIVER: RD*11x17*PDF.plt
PEN TABLE: plotord*ocon.tbl
FILE: r:\trans-design\o'connor\cadd\SNS\OC45PM02.dgn

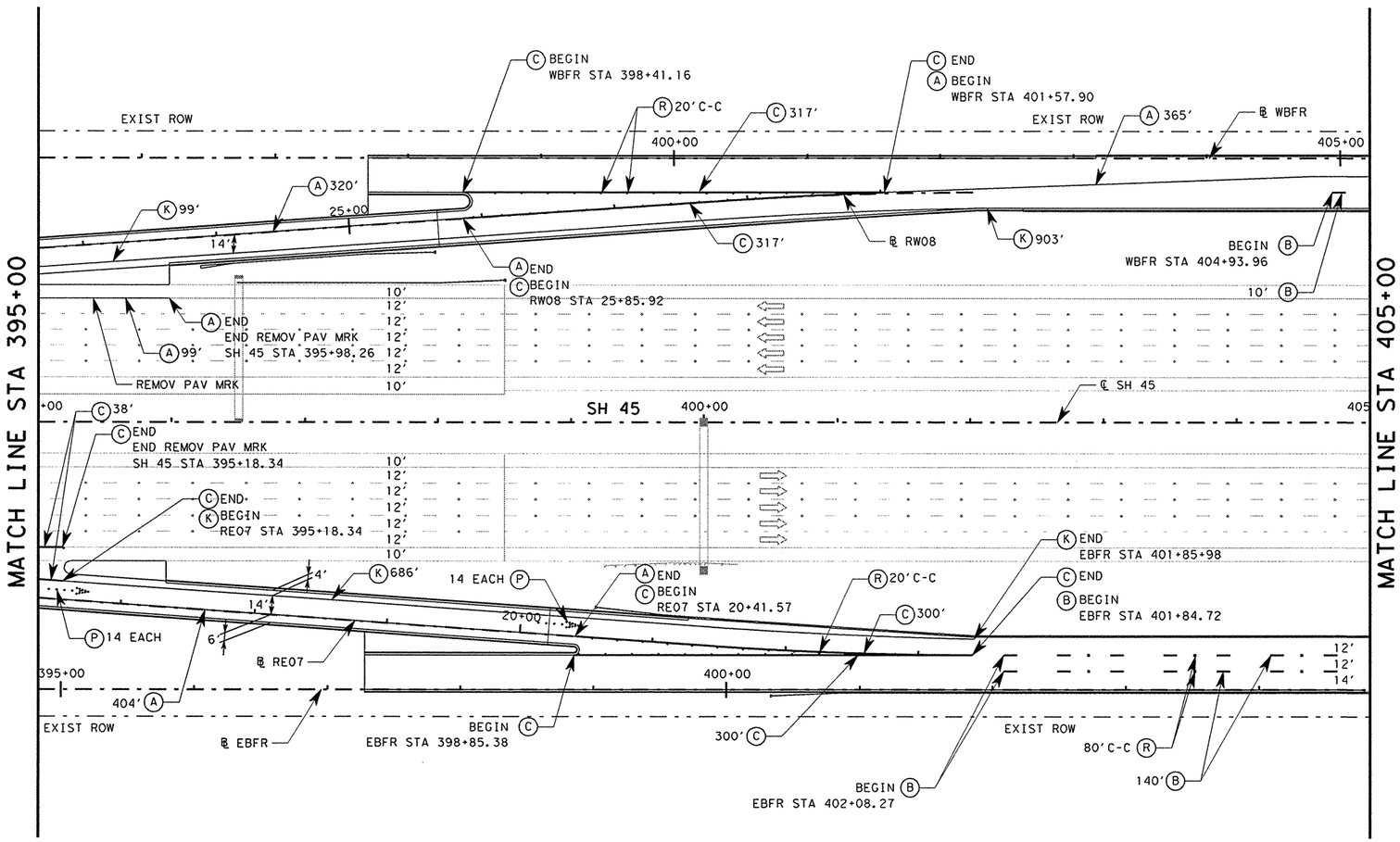

LEGEND

- (A) REFL PAV MRK TY I & II (W)(4")(SLD)
- (B) REFL PAV MRK TY I & II (W)(4")(BRK)
- (C) REFL PAV MRK TY I & II (W)(8")(SLD)
- (D) REFL PAV MRK TY I & II (W)(12")(LNDP)
- (E) REFL PAV MRK TY I & II (W)(12")(SLD)
- (F) REFL PAV MRK TY I & II (W)(24")(SLD)
- (G) REFL PAV MRK TY I & II (W)(ARROW)
- (H) REFL PAV MRK TY I & II (W)(DBL ARROW)
- (I) REFL PAV MRK TY I & II (W)(WORD)
- (J) REFL PAV MRK TY I & II (W)(8")(DOT)
- (K) REFL PAV MRK TY I & II (Y)(4")(SLD)
- (L) REFL PAV MRK TY I & II (Y)(4")(BRK)
- (M) REFL PAV MRK TY I & II (Y)(12")(SLD)
- (N) REFL PAV MRK TY I & II (Y)(MED NOSE)
- (O) RAIS PAV MRKR CL B (REFL) TY I-A
- (P) RAIS PAV MRKR CL B (REFL) TY I-R
- (Q) RAIS PAV MRKR CL B (REFL) TY II-A-A
- (R) RAIS PAV MRKR CL B (REFL) TY II-C-R
- (S) REFL PAV MRK TY I & II (W)(18")(YLD TRI)
- (T) REFL PAV MRK TY I & II (W)(36")(YLD TRI)
- (U) PREFAB PAV MRK TY B (W)(7") BRK CNTST
- ⇦ EXISTING TRAFFIC DIRECTION/TRAVEL LANE

0 25 50 100

STATE OF TEXAS
RENE U. GARZA
65409
REGISTERED
PROFESSIONAL ENGINEER

Rene U. Garza PE
4/11/14

PAVEMENT MARKINGS SUMMARY

ITEM	DESC	DESCRIPTION	UNIT	QTY	ITEM	DESC	DESCRIPTION	UNIT	QTY
666	2003	REFL PAV MRK TY I (W) 4" (BRK)(100MIL)	LF	150	666	2154	REF PAV MRK TY II (W) 12" (LNDP)	LF	0
666	2012	REFL PAV MRK TY I (W) 4" (SLD)(100MIL)	LF	1188	666	2155	REF PAV MRK TY II (W) 12" (SLD)	LF	0
666	2030	REFL PAV MRK TY I (W) 8" (DOT)(100MIL)	LF	0	666	2157	REF PAV MRK TY II (W) 24" (SLD)	LF	0
666	2036	REFL PAV MRK TY I (W) 8" (SLD)(100MIL)	LF	1272	666	2160	REF PAV MRK TY II (W) (ARROW)	EA	0
666	2039	REFL PAV MRK TY I (W) 12"(LNDP)(100MIL)	LF	0	666	2165	REF PAV MRK TY II (W) (DBL ARROW)	EA	0
666	2042	REFL PAV MRK TY I (W) 12"(SLD)(100MIL)	LF	0	666	2173	REF PAV MRK TY II (W) (WORD)	EA	0
666	2048	REFL PAV MRK TY I (W) 24"(SLD)(100MIL)	LF	0	666	2175	REF PAV MRK TY II (W) 36" (YLD TRI)	EA	0
666	2054	REFL PAV MRK TY I (W) (ARROW) (100MIL)	EA	0	666	2178	REF PAV MRK TY II (Y) 4" (SLD)	LF	1688
666	2069	REFL PAV MRK TY I(W)(DBL ARROW)(100MIL)	EA	0	666	2183	REF PAV MRK TY II (Y) 12" (SLD)	LF	0
666	2096	REFL PAV MRK TY I (W) (WORD) (100MIL)	EA	0	666	2188	REF PAV MRK TY II (Y) (MED NOSE)	EA	0
666	2102	REF PAV MRK TY I (W) 36" (YLD TRI) (100MIL)	EA	0	668	2137	PREFAB PAV MRK TY B (W)(7")BRK CNTST	LF	0
666	2111	REFL PAV MRK TY I (Y) 4" (SLD)(100MIL)	LF	1688	672	2014	REFL PAV MRKR TY I-R	EA	28
666	2126	REFL PAV MRK TY I (Y) 12"(SLD)(100MIL)	LF	0	672	2017	REFL PAV MRKR TY II-C-R	EA	62
666	2141	REFL PAV MRK TY I (Y)(MED NOSE)(100MIL)	EA	0	677	2001	ELIM EXT PAV MRK & MRKS (4")	LF	118
666	2142	REF PAV MRK TY II (W) 4" (BRK)	LF	150	677	2003	ELIM EXT PAV MRK & MRKS (8")	LF	0
666	2145	REF PAV MRK TY II (W) 4" (SLD)	LF	1188	677	2005	ELIM EXT PAV MRK & MRKS (12")	LF	0
666	2151	REF PAV MRK TY II (W) 8" (DOT)	LF	0	677	2007	ELIM EXT PAV MRK & MRKS (24")	LF	0
666	2153	REF PAV MRK TY II (W) 8" (SLD)	LF	1272	677	2008	ELIM EXT PAV MRK & MRKS (ARROW)	EA	0

REV. No.	DATE	REVISION	BY
△			
△			
△			

PBSJ
an Atkins company TBPE REG. # F-474

Texas Department of Transportation
Austin District
©2011 by TxDOT

SH 45 / O'CONNOR DRIVE
PAVEMENT MARKING LAYOUT
SH 45
STA 395+00 TO 405+00

SCALE: 1"=100' SHEET 3 OF 8

DESIGNED: EG	FED. RD DIV. NO.	STATE	PROJECT No.			HIGHWAY No.	
CHECKED: SED	6	TEXAS				LP 1/SH 45	
DRAWN: EG	STATE DISTRICT	COUNTY	CONTROL No.	SECTION No.	JOB No.	SHEET No.	
CHECKED: SED	AUSTIN	WILLIAMSON	0683	06	027	663	

DATE: 4/11/2011 TIME: 11:02:05 AM
PLOT DRIVER: RD*11x17*PDF.plt
PEN TABLE: plotord*ocon.tbl
FILE: r:\trans-design\o'connor\cadd\SNS\OC45PM03.dgn

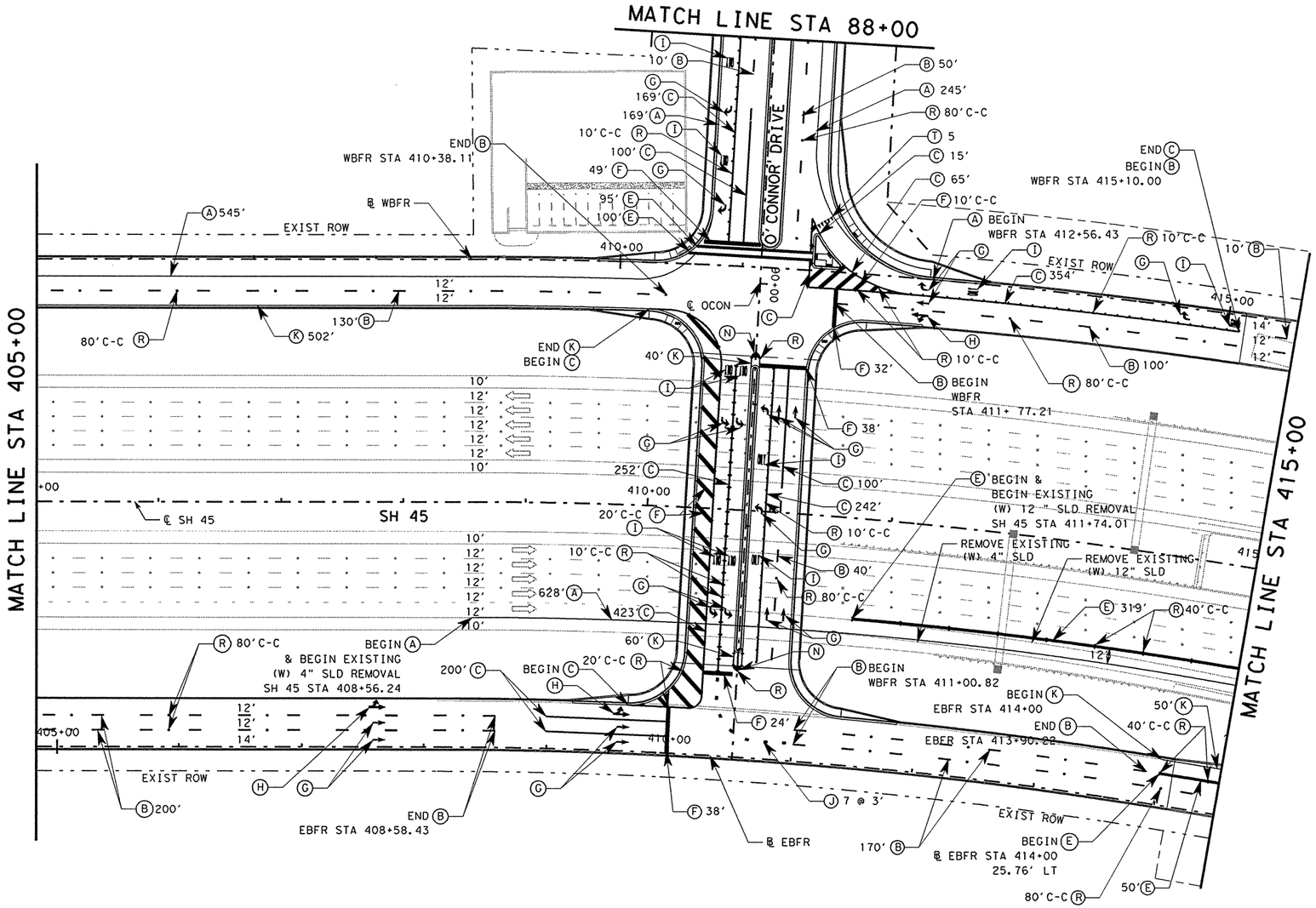

LEGEND

- (A) REFL PAV MRK TY I & II (W)(4")(SLD)
- (B) REFL PAV MRK TY I & II (W)(4")(BRK)
- (C) REFL PAV MRK TY I & II (W)(8")(SLD)
- (D) REFL PAV MRK TY I & II (W)(12")(LNDP)
- (E) REFL PAV MRK TY I & II (W)(12")(SLD)
- (F) REFL PAV MRK TY I & II (W)(24")(SLD)
- (G) REFL PAV MRK TY I & II (W)(ARROW)
- (H) REFL PAV MRK TY I & II (W)(DBL ARROW)
- (I) REFL PAV MRK TY I & II (W)(WORD)
- (J) REFL PAV MRK TY I & II (W)(8")(DOT)
- (K) REFL PAV MRK TY I & II (Y)(4")(SLD)
- (L) REFL PAV MRK TY I & II (Y)(4")(BRK)
- (M) REFL PAV MRK TY I & II (Y)(12")(SLD)
- (N) REFL PAV MRK TY I & II (Y)(MED NOSE)
- (O) RAIS PAV MRKR CL B (REFL) TY I-A
- (P) RAIS PAV MRKR CL B (REFL) TY I-R
- (Q) RAIS PAV MRKR CL B (REFL) TY II-A-A
- (R) RAIS PAV MRKR CL B (REFL) TY II-C-R
- (S) REFL PAV MRK TY I & II (W)(18")(YLD TRI)
- (T) REFL PAV MRK TY I & II (W)(36")(YLD TRI)
- (U) PREFAB PAV MRK TY B (W)(7") BRK CNTST
- ⇦ EXISTING TRAFFIC DIRECTION/TRAVEL LANE

0 25 50 100

STATE OF TEXAS
RENE U. GARZA
65409
REGISTERED
PROFESSIONAL ENGINEER

Rene U. Garza PE
4/11/11

REV. NO.	DATE	REVISION	BY
△			
△			
△			

PBSJ
an Atkins company
TBPE REG. # F-474

Texas Department of Transportation
Austin District
©2011 by TxDOT

SH 45 / O'CONNOR DRIVE PAVEMENT MARKING LAYOUT SH 45 STA 405+00 TO 415+00

SCALE: 1"=100'

SHEET 4 OF 8

DESIGNED: EG	FED. RD DIV. No.	STATE	PROJECT No.			HIGHWAY No.
CHECKED: SED	6	TEXAS				LP 1/SH 45
DRAWN: EG	STATE DISTRICT	COUNTY	CONTROL No.	SECTION No.	JOB No.	SHEET No.
CHECKED: SED	AUSTIN	WILLIAMSON	0683	06	027	664

PAVEMENT MARKINGS SUMMARY

ITEM	DESC	DESCRIPTION	UNIT	QTY	ITEM	DESC	DESCRIPTION	UNIT	QTY
666	2003	REFL PAV MRK TY I (W) 4" (BRK)(100MIL)	LF	790	666	2154	REF PAV MRK TY II (W) 12" (LNDP)	LF	0
666	2012	REFL PAV MRK TY I (W) 4" (SLD)(100MIL)	LF	1587	666	2155	REF PAV MRK TY II (W) 12" (SLD)	LF	564
666	2030	REFL PAV MRK TY I (W) 8" (DOT)(100MIL)	LF	21	666	2157	REF PAV MRK TY II (W) 24" (SLD)	LF	594
666	2036	REFL PAV MRK TY I (W) 8" (SLD)(100MIL)	LF	1920	666	2160	REF PAV MRK TY II (W) (ARROW)	EA	19
666	2039	REFL PAV MRK TY I (W) 12"(LNDP)(100MIL)	LF	0	666	2165	REF PAV MRK TY II (W) (DBL ARROW)	EA	3
666	2042	REFL PAV MRK TY I (W) 12"(SLD)(100MIL)	LF	564	666	2173	REF PAV MRK TY II (W) (WORD)	EA	10
666	2048	REFL PAV MRK TY I (W) 24"(SLD)(100MIL)	LF	594	666	2175	REF PAV MRK TY II (W) 36" (YLD TRI)	EA	5
666	2054	REFL PAV MRK TY I (W) (ARROW) (100MIL)	EA	19	666	2178	REF PAV MRK TY II (Y) 4" (SLD)	LF	652
666	2069	REFL PAV MRK TY I(W)(DBL ARROW)(100MIL)	EA	3	666	2183	REF PAV MRK TY II (Y) 12" (SLD)	LF	0
666	2096	REFL PAV MRK TY I (W) (WORD) (100MIL)	EA	10	666	2188	REF PAV MRK TY II (Y) (MED NOSE)	EA	2
666	2102	REF PAV MRK TY I (W) 36" (YLD TRI) (100MIL)	EA	5	668	2137	PREFAB PAV MRK TY B (W)(7")BRK CNTST	LF	0
666	2111	REFL PAV MRK TY I (Y) 4" (SLD)(100MIL)	LF	652	672	2014	REFL PAV MRKR TY I-R	EA	0
666	2126	REFL PAV MRK TY I (Y) 12"(SLD)(100MIL)	LF	0	672	2017	REFL PAV MRKR TY II-C-R	EA	244
666	2141	REFL PAV MRK TY I (Y)(MED NOSE)(100MIL)	EA	2	677	2001	ELIM EXT PAV MRK & MRKS (4")	LF	628
666	2142	REF PAV MRK TY II (W) 4" (BRK)	LF	790	677	2003	ELIM EXT PAV MRK & MRKS (8")	LF	0
666	2145	REF PAV MRK TY II (W) 4" (SLD)	LF	1587	677	2005	ELIM EXT PAV MRK & MRKS (12")	LF	319
666	2151	REF PAV MRK TY II (W) 8" (DOT)	LF	21	677	2007	ELIM EXT PAV MRK & MRKS (24")	LF	0
666	2153	REF PAV MRK TY II (W) 8" (SLD)	LF	1920	677	2008	ELIM EXT PAV MRK & MRKS (ARROW)	EA	0

DATE: 4/11/2011 TIME: 11:02:07 AM

PLOT DRIVER: RD*11x17*PDF.plt
PEN TABLE: plotordr*ocon.tbl
FILE: r:\trans-design\o'connor\cadd\SNS\0C45PM04.dgn

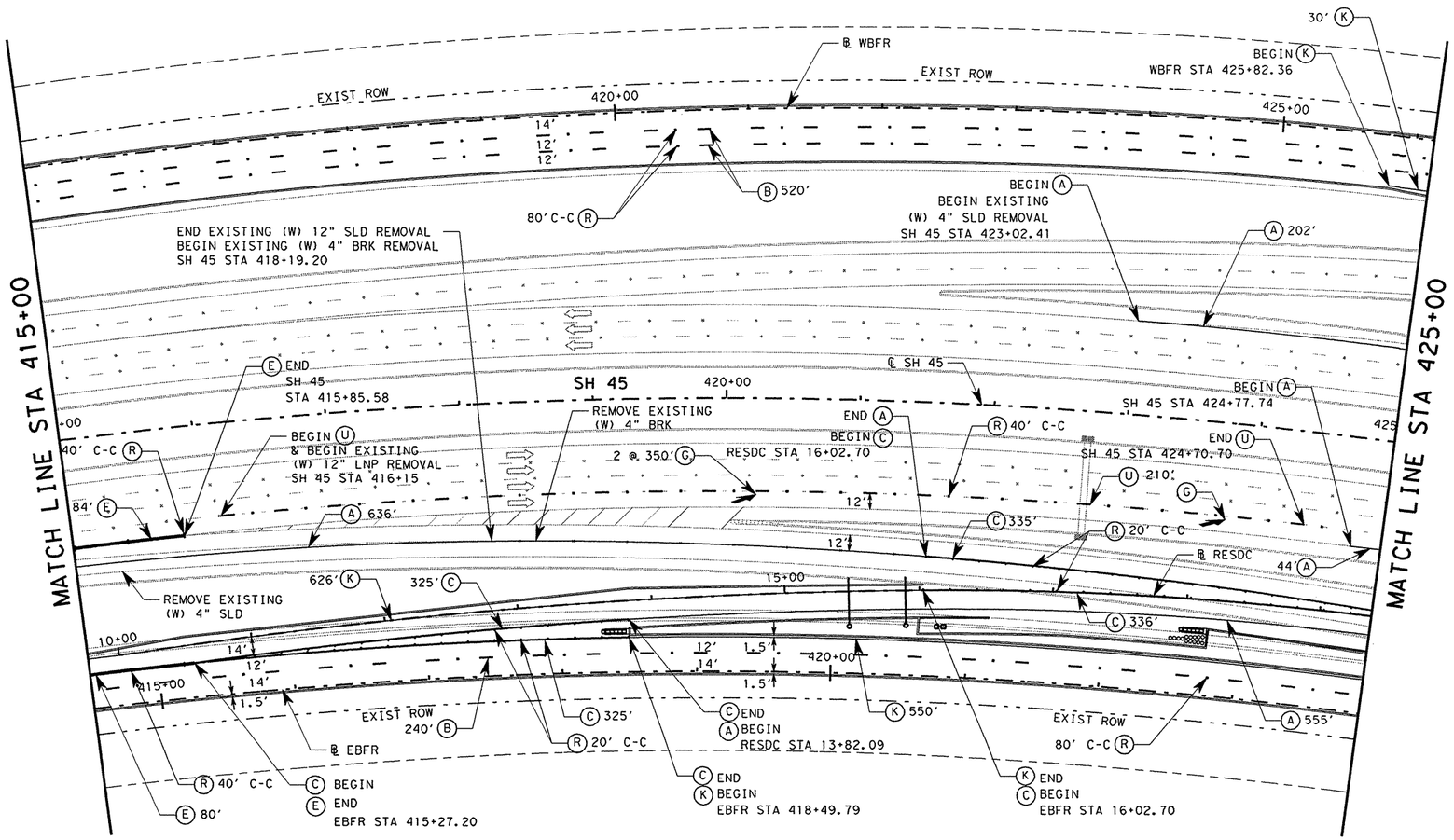

LEGEND

- (A) REFL PAV MRK TY I & II (W)(4")(SLD)
- (B) REFL PAV MRK TY I & II (W)(4")(BRK)
- (C) REFL PAV MRK TY I & II (W)(8")(SLD)
- (D) REFL PAV MRK TY I & II (W)(12")(LNDP)
- (E) REFL PAV MRK TY I & II (W)(12")(SLD)
- (F) REFL PAV MRK TY I & II (W)(24")(SLD)
- (G) REFL PAV MRK TY I & II (W)(ARROW)
- (H) REFL PAV MRK TY I & II (W)(DBL ARROW)
- (I) REFL PAV MRK TY I & II (W)(WORD)
- (J) REFL PAV MRK TY I & II (W)(8")(DOT)
- (K) REFL PAV MRK TY I & II (Y)(4")(SLD)
- (L) REFL PAV MRK TY I & II (Y)(4")(BRK)
- (M) REFL PAV MRK TY I & II (Y)(12")(SLD)
- (N) REFL PAV MRK TY I & II (Y)(MED NOSE)
- (O) RAIS PAV MRKR CL B (REFL) TY I-A
- (P) RAIS PAV MRKR CL B (REFL) TY I-R
- (Q) RAIS PAV MRKR CL B (REFL) TY II-A-A
- (R) RAIS PAV MRKR CL B (REFL) TY II-C-R
- (S) REFL PAV MRK TY I & II (W)(18")(YLD TRI)
- (T) REFL PAV MRK TY I & II (W)(36")(YLD TRI)
- (U) PREFAB PAV MRK TY B (W)(7") BRK CNTST
- ⇦ EXISTING TRAFFIC DIRECTION/TRAVEL LANE

0 25 50 100

STATE OF TEXAS
RENE U. GARZA
65409
REGISTERED PROFESSIONAL ENGINEER

Rene U Garza PE
4/11/11

PAVEMENT MARKINGS SUMMARY

ITEM	DESC	DESCRIPTION	UNIT	QTY	ITEM	DESC	DESCRIPTION	UNIT	QTY
666	2003	REFL PAV MRK TY I (W) 4" (BRK)(100MIL)	LF	760	666	2154	REF PAV MRK TY II (W) 12" (LNDP)	LF	0
666	2012	REFL PAV MRK TY I (W) 4" (SLD)(100MIL)	LF	1437	666	2155	REF PAV MRK TY II (W) 12" (SLD)	LF	164
666	2030	REFL PAV MRK TY I (W) 8" (DOT)(100MIL)	LF	0	666	2157	REF PAV MRK TY II (W) 24" (SLD)	LF	0
666	2036	REFL PAV MRK TY I (W) 8" (SLD)(100MIL)	LF	1321	666	2160	REF PAV MRK TY II (W) (ARROW)	EA	2
666	2039	REFL PAV MRK TY I (W) 12"(LNDP)(100MIL)	LF	0	666	2165	REF PAV MRK TY II (W) (DBL ARROW)	EA	0
666	2042	REFL PAV MRK TY I (W) 12"(SLD)(100MIL)	LF	164	666	2173	REF PAV MRK TY II (W) (WORD)	EA	0
666	2048	REFL PAV MRK TY I (W) 24"(SLD)(100MIL)	LF	0	666	2175	REF PAV MRK TY II (W) 36" (YLD TRI)	EA	0
666	2054	REFL PAV MRK TY I (W) (ARROW) (100MIL)	EA	2	666	2178	REF PAV MRK TY II (Y) 4" (SLD)	LF	1206
666	2069	REFL PAV MRK TY I(W)(DBL ARROW)(100MIL)	EA	0	666	2183	REF PAV MRK TY II (Y) 12" (SLD)	LF	0
666	2096	REFL PAV MRK TY I (W) (WORD) (100MIL)	EA	0	666	2188	REF PAV MRK TY II (Y) (MED NOSE)	EA	0
666	2102	REF PAV MRK TY I (W) 36" (YLD TRI) (100MIL)	EA	0	668	2137	PREFAB PAV MRK TY B (W)(7")BRK CNTST	LF	210
666	2111	REFL PAV MRK TY I (Y) 4" (SLD)(100MIL)	LF	1206	672	2014	REFL PAV MRKR TY I-R	EA	0
666	2126	REFL PAV MRK TY I (Y) 12"(SLD)(100MIL)	LF	0	672	2017	REFL PAV MRKR TY II-C-R	EA	130
666	2141	REFL PAV MRK TY I (Y)(MED NOSE)(100MIL)	EA	0	677	2001	ELIM EXT PAV MRK & MRKS (4")	LF	1368
666	2142	REF PAV MRK TY II (W) 4" (BRK)	LF	760	677	2003	ELIM EXT PAV MRK & MRKS (8")	LF	0
666	2145	REF PAV MRK TY II (W) 4" (SLD)	LF	1437	677	2005	ELIM EXT PAV MRK & MRKS (12")	LF	540
666	2151	REF PAV MRK TY II (W) 8" (DOT)	LF	0	677	2007	ELIM EXT PAV MRK & MRKS (24")	LF	0
666	2153	REF PAV MRK TY II (W) 8" (SLD)	LF	1321	677	2008	ELIM EXT PAV MRK & MRKS (ARROW)	EA	0

REV. NO.	DATE	REVISION	BY
△			
△			
△			

PBSJ
an Atkins company TBPE REG. # F-474

Texas Department of Transportation
Austin District
©2011 by TxDOT

SH 45 / O'CONNOR DRIVE PAVEMENT MARKING LAYOUT SH 45 STA 415+00 TO 425+00

SCALE: 1"=100' SHEET 5 OF 8

DESIGNED: EG	FED. RD DIV. No.	STATE	PROJECT No.			HIGHWAY No.
CHECKED: SED	6	TEXAS				LP 1/SH 45

DRAWN: EG	STATE DISTRICT	COUNTY	CONTROL No.	SECTION No.	JOB No.	SHEET No.
CHECKED: SED	AUSTIN	WILLIAMSON	0683	06	027	665

DATE: 4/11/2011 TIME: 11:02:10 AM
PLOT DRIVER: RD*11x17*PDF.plt
PEN TABLE: plotord*ocon.tbl
FILE: r:\trans-design\o'connor\cadd\SNS\OC45PM05.dgn

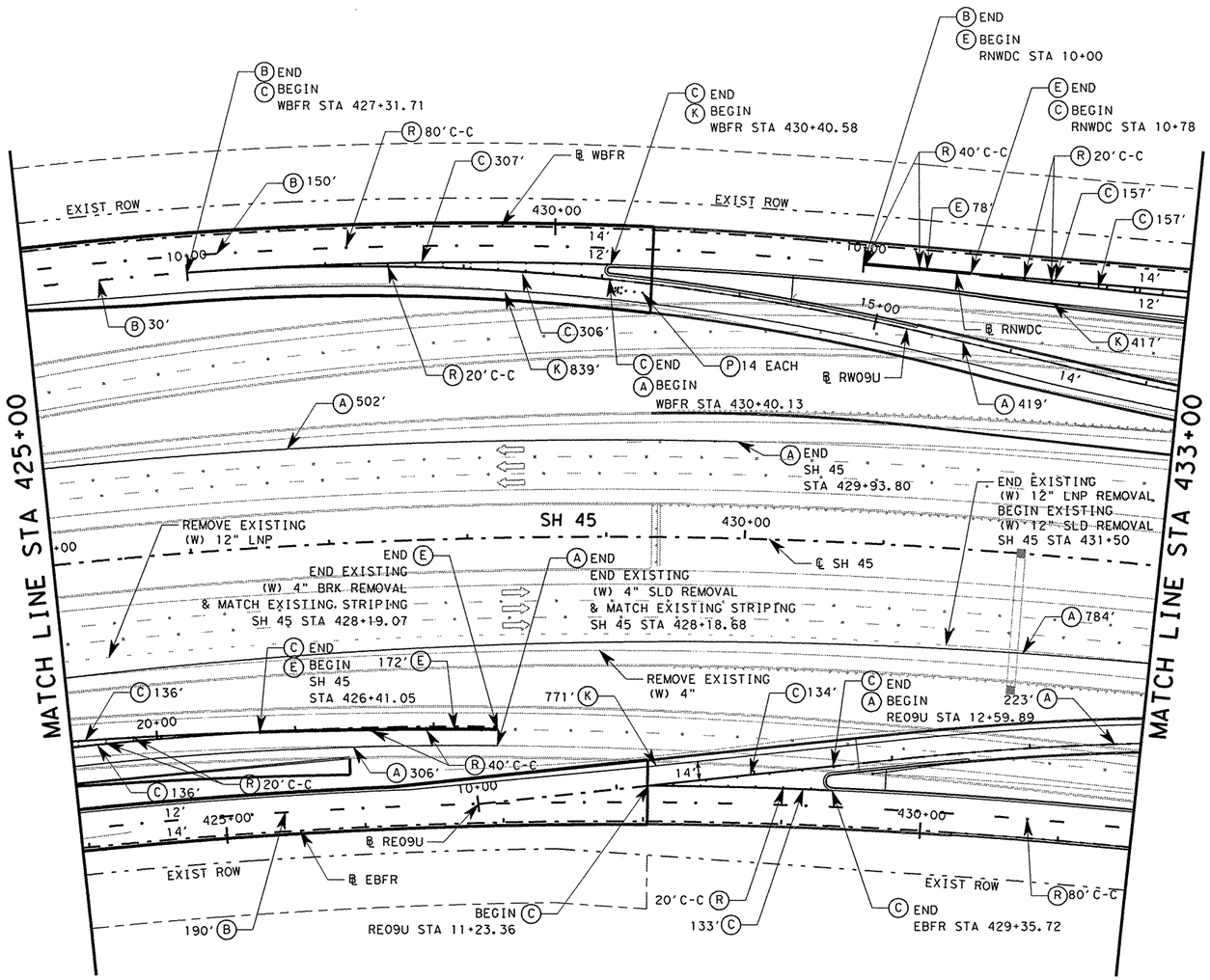

LEGEND

- (A) REFL PAV MRK TY I & II (W)(4")(SLD)
- (B) REFL PAV MRK TY I & II (W)(4")(BRK)
- (C) REFL PAV MRK TY I & II (W)(8")(SLD)
- (D) REFL PAV MRK TY I & II (W)(12")(LNDP)
- (E) REFL PAV MRK TY I & II (W)(12")(SLD)
- (F) REFL PAV MRK TY I & II (W)(24")(SLD)
- (G) REFL PAV MRK TY I & II (W)(ARROW)
- (H) REFL PAV MRK TY I & II (W)(DBL ARROW)
- (I) REFL PAV MRK TY I & II (W)(WORD)
- (J) REFL PAV MRK TY I & II (W)(8")(DOT)
- (K) REFL PAV MRK TY I & II (Y)(4")(SLD)
- (L) REFL PAV MRK TY I & II (Y)(4")(BRK)
- (M) REFL PAV MRK TY I & II (Y)(12")(SLD)
- (N) REFL PAV MRK TY I & II (Y)(MED NOSE)
- (O) RAIS PAV MRKR CL B (REFL) TY I-A
- (P) RAIS PAV MRKR CL B (REFL) TY I-R
- (Q) RAIS PAV MRKR CL B (REFL) TY II-A-A
- (R) RAIS PAV MRKR CL B (REFL) TY II-C-R
- (S) REFL PAV MRK TY I & II (W)(18")(YLD TRI)
- (T) REFL PAV MRK TY I & II (W)(36")(YLD TRI)
- (U) PREFAB PAV MRK TY B (W)(7") BRK CNTST
- ⇦ EXISTING TRAFFIC DIRECTION/TRAVEL LANE

0 25 50 100

STATE OF TEXAS
RENE U. GARZA
65409
REGISTERED
PROFESSIONAL ENGINEER

Rene U Garza PE
4/11/11

PAVEMENT MARKINGS SUMMARY

ITEM	DESC	DESCRIPTION	UNIT	QTY	ITEM	DESC	DESCRIPTION	UNIT	QTY
666	2003	REFL PAV MRK TY I (W) 4" (BRK)(100MIL)	LF	370	666	2154	REF PAV MRK TY II (W) 12" (LNDP)	LF	0
666	2012	REFL PAV MRK TY I (W) 4" (SLD)(100MIL)	LF	2234	666	2155	REF PAV MRK TY II (W) 12" (SLD)	LF	250
666	2030	REFL PAV MRK TY I (W) 8" (DOT)(100MIL)	LF	0	666	2157	REF PAV MRK TY II (W) 24" (SLD)	LF	0
666	2036	REFL PAV MRK TY I (W) 8" (SLD)(100MIL)	LF	1466	666	2160	REF PAV MRK TY II (W) (ARROW)	EA	0
666	2039	REFL PAV MRK TY I (W) 12"(LNDP)(100MIL)	LF	0	666	2165	REF PAV MRK TY II (W) (DBL ARROW)	EA	0
666	2042	REFL PAV MRK TY I (W) 12"(SLD)(100MIL)	LF	250	666	2173	REF PAV MRK TY II (W) (WORD)	EA	0
666	2048	REFL PAV MRK TY I (W) 24"(SLD)(100MIL)	LF	0	666	2175	REF PAV MRK TY II (W) 36" (YLD TRI)	EA	0
666	2054	REFL PAV MRK TY I (W) (ARROW) (100MIL)	EA	0	666	2178	REF PAV MRK TY II (Y) 4" (SLD)	LF	2027
666	2069	REFL PAV MRK TY I(W)(DBL ARROW)(100MIL)	EA	0	666	2183	REF PAV MRK TY II (Y) 12" (SLD)	LF	0
666	2096	REFL PAV MRK TY I (W) (WORD) (100MIL)	EA	0	666	2188	REF PAV MRK TY II (Y) (MED NOSE)	EA	0
666	2102	REF PAV MRK TY I (W) 36" (YLD TRI) (100MIL)	EA	0	668	2137	PREFAB PAV MRK TY B (W)(7")BRK CNTST	LF	0
666	2111	REFL PAV MRK TY I (Y) 4" (SLD)(100MIL)	LF	2027	672	2014	REFL PAV MRKR TY I-R	EA	14
666	2126	REFL PAV MRK TY I (Y) 12"(SLD)(100MIL)	LF	0	672	2017	REFL PAV MRKR TY II-C-R	EA	63
666	2141	REFL PAV MRK TY I (Y)(MED NOSE)(100MIL)	EA	0	677	2001	ELIM EXT PAV MRK & MRKS (4")	LF	1120
666	2142	REF PAV MRK TY II (W) 4" (BRK)	LF	370	677	2003	ELIM EXT PAV MRK & MRKS (8")	LF	0
666	2145	REF PAV MRK TY II (W) 4" (SLD)	LF	2234	677	2005	ELIM EXT PAV MRK & MRKS (12")	LF	312
666	2151	REF PAV MRK TY II (W) 8" (DOT)	LF	0	677	2007	ELIM EXT PAV MRK & MRKS (24")	LF	0
666	2153	REF PAV MRK TY II (W) 8" (SLD)	LF	1466	677	2008	ELIM EXT PAV MRK & MRKS (ARROW)	EA	0

REV. No.	DATE	REVISION	BY
△			
△			
△			

PBSJ
an Atkins company TBPE REG. # F-474

Texas Department of Transportation
Austin District
©2011 by TxDOT

SH 45 / O'CONNOR DRIVE PAVEMENT MARKING LAYOUT SH 45 STA 425+00 TO 433+00

SCALE: 1"=100' SHEET 6 OF 8

DESIGNED: EG	FED. RD DIV. No.	STATE	PROJECT No.			HIGHWAY No.
CHECKED: SED	6	TEXAS				LP 1/SH 45
DRAWN: EG	STATE DISTRICT	COUNTY	CONTROL No.	SECTION No.	JOB No.	SHEET No.
CHECKED: SED	AUSTIN	WILLIAMSON	0683	06	027	666

DATE: 4/11/2011 TIME: 11:02:12 AM
PLOT DRIVER: RD*11x17*PDF.plt
PEN TABLE: plotordr*ocon.tbl
FILE: r:\trans-design\o'connor\cadd\SNS\OC45PM06.dgn

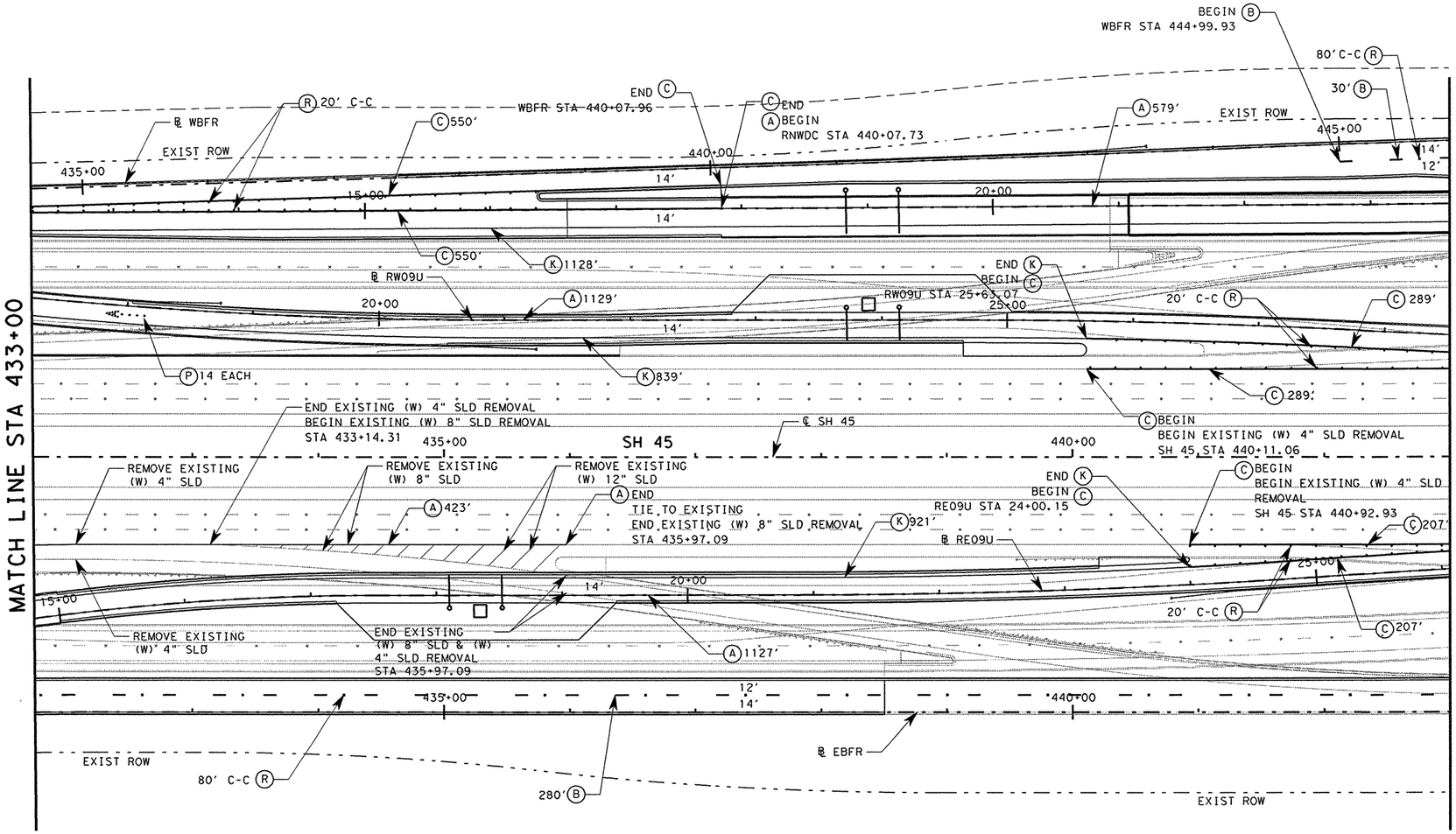

LEGEND

- (A) REFL PAV MRK TY I & II (W)(4")(SLD)
- (B) REFL PAV MRK TY I & II (W)(4")(BRK)
- (C) REFL PAV MRK TY I & II (W)(8")(SLD)
- (D) REFL PAV MRK TY I & II (W)(12")(LNDP)
- (E) REFL PAV MRK TY I & II (W)(12")(SLD)
- (F) REFL PAV MRK TY I & II (W)(24")(SLD)
- (G) REFL PAV MRK TY I & II (W)(ARROW)
- (H) REFL PAV MRK TY I & II (W)(DBL ARROW)
- (I) REFL PAV MRK TY I & II (W)(WORD)
- (J) REFL PAV MRK TY I & II (W)(8")(DOT)
- (K) REFL PAV MRK TY I & II (Y)(4")(SLD)
- (L) REFL PAV MRK TY I & II (Y)(4")(BRK)
- (M) REFL PAV MRK TY I & II (Y)(12")(SLD)
- (N) REFL PAV MRK TY I & II (Y)(MED NOSE)
- (O) RAIS PAV MRKR CL B (REFL) TY I-A
- (P) RAIS PAV MRKR CL B (REFL) TY I-R
- (Q) RAIS PAV MRKR CL B (REFL) TY II-A-A
- (R) RAIS PAV MRKR CL B (REFL) TY II-C-R
- (S) REFL PAV MRK TY I & II (W)(18")(YLD TRI)
- (T) REFL PAV MRK TY I & II (W)(36")(YLD TRI)
- (U) PREFAB PAV MRK TY B (W)(7") BRK CNTST
- ⇦ EXISTING TRAFFIC DIRECTION/TRAVEL LANE

0 25 50 100

STATE OF TEXAS
RENE U. GARZA
65409
REGISTERED PROFESSIONAL ENGINEER
Rene U Garza PE
4/11/11

PAVEMENT MARKINGS SUMMARY

ITEM	DESC	DESCRIPTION	UNIT	QTY	ITEM	DESC	DESCRIPTION	UNIT	QTY
666	2003	REFL PAV MRK TY I (W) 4" (BRK)(100MIL)	LF	310	666	2154	REF PAV MRK TY II (W) 12" (LNDP)	LF	0
666	2012	REFL PAV MRK TY I (W) 4" (SLD)(100MIL)	LF	3258	666	2155	REF PAV MRK TY II (W) 12" (SLD)	LF	0
666	2030	REFL PAV MRK TY I (W) 8" (DOT)(100MIL)	LF	0	666	2157	REF PAV MRK TY II (W) 24" (SLD)	LF	0
666	2036	REFL PAV MRK TY I (W) 8" (SLD)(100MIL)	LF	2092	666	2160	REF PAV MRK TY II (W) (ARROW)	EA	0
666	2039	REFL PAV MRK TY I (W) 12"(LNDP)(100MIL)	LF	0	666	2165	REF PAV MRK TY II (W) (DBL ARROW)	EA	0
666	2042	REFL PAV MRK TY I (W) 12"(SLD)(100MIL)	LF	0	666	2173	REF PAV MRK TY II (W) (WORD)	EA	0
666	2048	REFL PAV MRK TY I (W) 24"(SLD)(100MIL)	LF	0	666	2175	REF PAV MRK TY II (W) 36" (YLD TRI)	EA	0
666	2054	REFL PAV MRK TY I (W) (ARROW) (100MIL)	EA	0	666	2178	REF PAV MRK TY II (Y) 4" (SLD)	LF	2888
666	2069	REFL PAV MRK TY I(W)(DBL ARROW)(100MIL)	EA	0	666	2183	REF PAV MRK TY II (Y) 12" (SLD)	LF	0
666	2096	REFL PAV MRK TY I (W) (WORD) (100MIL)	EA	0	666	2188	REF PAV MRK TY II (Y) (MED NOSE)	EA	0
666	2102	REF PAV MRK TY I (W) 36" (YLD TRI) (100MIL)	EA	0	668	2137	PREFAB PAV MRK TY B (W)(7")BRK CNTST	LF	0
666	2111	REFL PAV MRK TY I (Y) 4" (SLD)(100MIL)	LF	2888	672	2014	REFL PAV MRKR TY I-R	EA	14
666	2126	REFL PAV MRK TY I (Y) 12"(SLD)(100MIL)	LF	0	672	2017	REFL PAV MRKR TY II-C-R	EA	109
666	2141	REFL PAV MRK TY I (Y)(MED NOSE)(100MIL)	EA	0	677	2001	ELIM EXT PAV MRK & MRKS (4")	LF	882
666	2142	REF PAV MRK TY II (W) 4" (BRK)	LF	310	677	2003	ELIM EXT PAV MRK & MRKS (8")	LF	535
666	2145	REF PAV MRK TY II (W) 4" (SLD)	LF	3258	677	2005	ELIM EXT PAV MRK & MRKS (12")	LF	136
666	2151	REF PAV MRK TY II (W) 8" (DOT)	LF	0	677	2007	ELIM EXT PAV MRK & MRKS (24")	LF	0
666	2153	REF PAV MRK TY II (W) 8" (SLD)	LF	2092	677	2008	ELIM EXT PAV MRK & MRKS (ARROW)	EA	0

REV. No.	DATE	REVISION	BY
△			
△			
△			

PBSJ an Atkins company TBPE REG. # F-474

Texas Department of Transportation
Austin District
©2011 by TxDOT

SH 45 / O'CONNOR DRIVE PAVEMENT MARKING LAYOUT SH 45 STA 433+00 TO 443+00

SCALE: 1"=100' SHEET 7 OF 8

DESIGNED: EG	FED. RD DIV. No.	STATE	PROJECT No.			HIGHWAY No.
CHECKED: SED	6	TEXAS				LP 1/SH 45
DRAWN: EG	STATE DISTRICT	COUNTY	CONTROL No.	SECTION No.	JOB No.	SHEET No.
CHECKED: SED	AUSTIN	WILLIAMSON	0683	06	027	667

DATE: 4/11/2011 TIME: 11:02:15 AM
PLOT DRIVER: RD*11x17*PDF.plt
PEN TABLE: plotdr*ocon.tbl
FILE: r:\trans-design\o'connor\cadd\SNS\OC45PM07.dgn

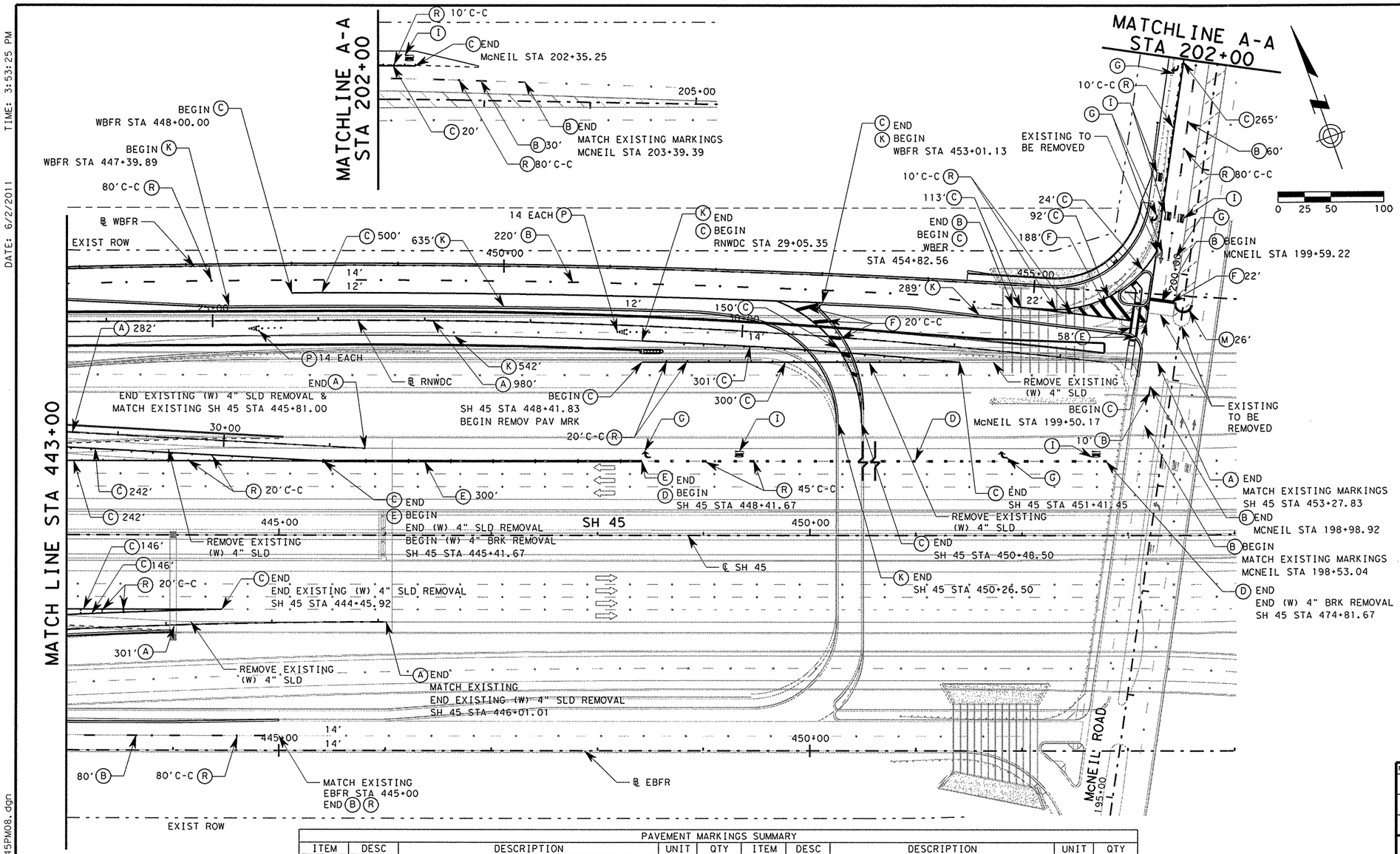

LEGEND

- (A) REFL PAV MRK TY I & II (W)(4")(SLD)
- (B) REFL PAV MRK TY I & II (W)(4")(BRK)
- (C) REFL PAV MRK TY I & II (W)(8")(SLD)
- (D) REFL PAV MRK TY I & II (W)(12")(LNDP)
- (E) REFL PAV MRK TY I & II (W)(12")(SLD)
- (F) REFL PAV MRK TY I & II (W)(24")(SLD)
- (G) REFL PAV MRK TY I & II (W)(ARROW)
- (H) REFL PAV MRK TY I & II (W)(DBL ARROW)
- (I) REFL PAV MRK TY I & II (W)(WORD)
- (J) REFL PAV MRK TY I & II (W)(8")(DOT)
- (K) REFL PAV MRK TY I & II (Y)(4")(SLD)
- (L) REFL PAV MRK TY I & II (Y)(4")(BRK)
- (M) REFL PAV MRK TY I & II (Y)(12")(SLD)
- (N) REFL PAV MRK TY I & II (Y)(MED NOSE)
- (O) RAIS PAV MRKR CL B (REFL) TY I-A
- (P) RAIS PAV MRKR CL B (REFL) TY I-R
- (Q) RAIS PAV MRKR CL B (REFL) TY II-A-A
- (R) RAIS PAV MRKR CL B (REFL) TY II-C-R
- (S) REFL PAV MRK TY I & II (W)(18")(YLD TRI)
- (T) REFL PAV MRK TY I & II (W)(36")(YLD TRI)
- (U) PREFAB PAV MRK TY B (W)(7") BRK CNTST
- ⇦ EXISTING TRAFFIC DIRECTION/TRAVEL LANE

PAVEMENT MARKINGS SUMMARY

ITEM	DESC	DESCRIPTION	UNIT	QTY	ITEM	DESC	DESCRIPTION	UNIT	QTY
666	2003	REFL PAV MRK TY I (W) 4" (BRK)(100MIL)	LF	300	666	2154	REF PAV MRK TY II (W) 12" (LNDP)	LF	528
666	2012	REFL PAV MRK TY I (W) 4" (SLD)(100MIL)	LF	1663	666	2155	REF PAV MRK TY II (W) 12" (SLD)	LF	358
666	2030	REFL PAV MRK TY I (W) 8" (DOT)(100MIL)	LF	0	666	2157	REF PAV MRK TY II (W) 24" (SLD)	LF	275
666	2036	REFL PAV MRK TY I (W) 8" (SLD)(100MIL)	LF	2540	666	2160	REF PAV MRK TY II (W) (ARROW)	EA	6
666	2039	REFL PAV MRK TY I (W) 12"(LNDP)(100MIL)	LF	528	666	2165	REF PAV MRK TY II (W) (DBL ARROW)	EA	0
666	2042	REFL PAV MRK TY I (W) 12"(SLD)(100MIL)	LF	358	666	2173	REF PAV MRK TY II (W) (WORD)	EA	6
666	2048	REFL PAV MRK TY I (W) 24"(SLD)(100MIL)	LF	275	666	2175	REF PAV MRK TY II (W) 36" (YLD TRI)	EA	0
666	2054	REFL PAV MRK TY I (W) (ARROW) (100MIL)	EA	6	666	2178	REF PAV MRK TY II (Y) 4" (SLD)	LF	1466
666	2069	REFL PAV MRK TY I(W)(DBL ARROW)(100MIL)	EA	0	666	2183	REF PAV MRK TY II (Y) 12" (SLD)	LF	26
666	2096	REFL PAV MRK TY I (W) (WORD) (100MIL)	EA	6	666	2188	REF PAV MRK TY II (Y) (MED NOSE)	EA	0
666	2102	REF PAV MRK TY I (W) 36" (YLD TRI) (100MIL)	EA	0	668	2137	PREFAB PAV MRK TY B (W)(7")BRK CNTST	LF	0
666	2111	REFL PAV MRK TY I (Y) 4" (SLD)(100MIL)	LF	1466	672	2014	REFL PAV MRKR TY I-R	EA	28
666	2126	REFL PAV MRK TY I (Y) 12"(SLD)(100MIL)	LF	26	672	2017	REFL PAV MRKR TY II-C-R	EA	236
666	2141	REFL PAV MRK TY I (Y)(MED NOSE)(100MIL)	EA	0	677	2001	ELIM EXT PAV MRK & MRKS (4")	LF	2142
666	2142	REF PAV MRK TY II (W) 4" (BRK)	LF	300	677	2003	ELIM EXT PAV MRK & MRKS (8")	LF	0
666	2145	REF PAV MRK TY II (W) 4" (SLD)	LF	1663	677	2005	ELIM EXT PAV MRK & MRKS (12")	LF	49
666	2151	REF PAV MRK TY II (W) 8" (DOT)	LF	0	677	2007	ELIM EXT PAV MRK & MRKS (24")	LF	48
666	2153	REF PAV MRK TY II (W) 8" (SLD)	LF	2540	677	2008	ELIM EXT PAV MRK & MRKS (ARROW)	EA	1

STATE OF TEXAS
RENE U. GARZA
65409
REGISTERED PROFESSIONAL ENGINEER

Rene U Garza PE
6/3/11

REV. No.	DATE	REVISION	BY
△			
△			
△			

PBSJ
an Atkins company
TBPE REG. # F-474

Texas Department of Transportation
Austin District
©2011 by TxDOT

SH 45 / O'CONNOR DRIVE PAVEMENT MARKING LAYOUT SH 45 STA 443+00 TO 454+00

SCALE: 1"=100' SHEET 8 OF 8

DESIGNED: EG	FED. RD DIV. No.	STATE	PROJECT No.			HIGHWAY No.	
CHECKED: SED	6	TEXAS				LP 1/SH 45	
DRAWN: EG	STATE DISTRICT	COUNTY	CONTROL No.	SECTION No.	JOB No.	SHEET No.	
CHECKED: SED	AUSTIN	WILLIAMSON	0683	06	027	668	

DATE: 6/2/2011 TIME: 3:53:25 PM
PLOT DRIVER: RDx11x17xPDF.pl+
PEN TABLE: plotordr*ocon.tbl
FILE: r:\trans-design\o'connor\cadd\SNS\OC45PM08.dgn

DATE: 4/11/2011 TIME: 11:02:22 AM

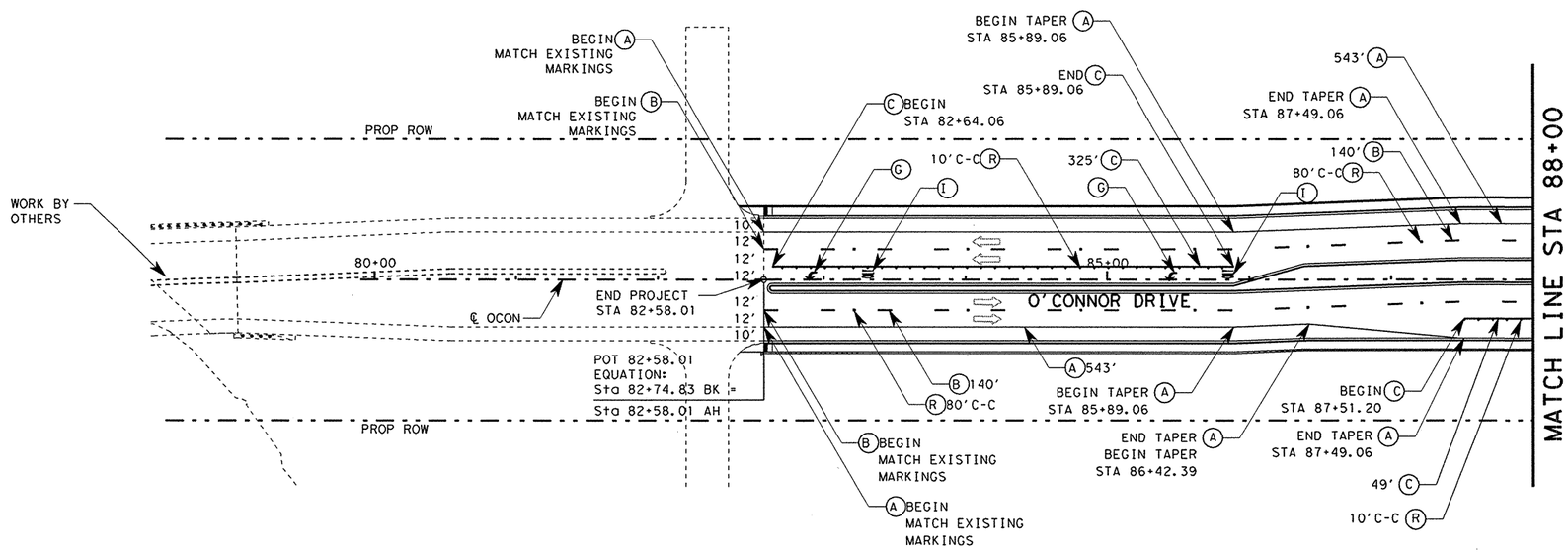

0 25 50 100

LEGEND

- (A) REFL PAV MRK TY I & II (W)(4")(SLD)
- (B) REFL PAV MRK TY I & II (W)(4")(BRK)
- (C) REFL PAV MRK TY I & II (W)(8")(SLD)
- (D) REFL PAV MRK TY I & II (W)(12")(LNDP)
- (E) REFL PAV MRK TY I & II (W)(12")(SLD)
- (F) REFL PAV MRK TY I & II (W)(24")(SLD)
- (G) REFL PAV MRK TY I & II (W)(ARROW)
- (H) REFL PAV MRK TY I & II (W)(DBL ARROW)
- (I) REFL PAV MRK TY I & II (W)(WORD)
- (J) REFL PAV MRK TY I & II (W)(8")(DOT)
- (K) REFL PAV MRK TY I & II (Y)(4")(SLD)
- (L) REFL PAV MRK TY I & II (Y)(4")(BRK)
- (M) REFL PAV MRK TY I & II (Y)(12")(SLD)
- (N) REFL PAV MRK TY I & II (Y)(MED NOSE)
- (O) RAIS PAV MRKR CL B (REFL) TY I-A
- (P) RAIS PAV MRKR CL B (REFL) TY I-R
- (Q) RAIS PAV MRKR CL B (REFL) TY II-A-A
- (R) RAIS PAV MRKR CL B (REFL) TY II-C-R
- (S) REFL PAV MRK TY I & II (W)(18")(YLD TRI)
- (T) REFL PAV MRK TY I & II (W)(36")(YLD TRI)
- (U) PREFAB PAV MRK TY B (W)(7") BRK CNTST
- ⇦ EXISTING TRAFFIC DIRECTION/TRAVEL LANE

STATE OF TEXAS
RENE U. GARZA
65409
REGISTERED
PROFESSIONAL ENGINEER

Rene U Garza PE
4/11/11

PAVEMENT MARKINGS SUMMARY

ITEM	DESC	DESCRIPTION	UNIT	QTY	ITEM	DESC	DESCRIPTION	UNIT	QTY
666	2003	REFL PAV MRK TY I (W) 4" (BRK)(100MIL)	LF	280	666	2154	REF PAV MRK TY II (W) 12" (LNDP)	LF	0
666	2012	REFL PAV MRK TY I (W) 4" (SLD)(100MIL)	LF	1086	666	2155	REF PAV MRK TY II (W) 12" (SLD)	LF	0
666	2030	REFL PAV MRK TY I (W) 8" (DOT)(100MIL)	LF	0	666	2157	REF PAV MRK TY II (W) 24" (SLD)	LF	0
666	2036	REFL PAV MRK TY I (W) 8" (SLD)(100MIL)	LF	374	666	2160	REF PAV MRK TY II (W) (ARROW)	EA	2
666	2039	REFL PAV MRK TY I (W) 12"(LNDP)(100MIL)	LF	0	666	2165	REF PAV MRK TY II (W) (DBL ARROW)	EA	0
666	2042	REFL PAV MRK TY I (W) 12"(SLD)(100MIL)	LF	0	666	2173	REF PAV MRK TY II (W) (WORD)	EA	2
666	2048	REFL PAV MRK TY I (W) 24"(SLD)(100MIL)	LF	0	666	2175	REF PAV MRK TY II (W) 36" (YLD TRI)	EA	0
666	2054	REFL PAV MRK TY I (W) (ARROW) (100MIL)	EA	2	666	2178	REF PAV MRK TY II (Y) 4" (SLD)	LF	0
666	2069	REFL PAV MRK TY I(W)(DBL ARROW)(100MIL)	EA	0	666	2183	REF PAV MRK TY II (Y) 12" (SLD)	LF	0
666	2096	REFL PAV MRK TY I (W) (WORD) (100MIL)	EA	2	666	2188	REF PAV MRK TY II (Y) (MED NOSE)	EA	0
666	2102	REF PAV MRK TY I (W) 36" (YLD TRI) (100MIL)	EA	0	668	2137	PREFAB PAV MRK TY B (W)(7")BRK CNTST	LF	0
666	2111	REFL PAV MRK TY I (Y) 4" (SLD)(100MIL)	LF	0	672	2014	REFL PAV MRKR TY I-R	EA	0
666	2126	REFL PAV MRK TY I (Y) 12"(SLD)(100MIL)	LF	0	672	2017	REFL PAV MRKR TY II-C-R	EA	50
666	2141	REFL PAV MRK TY I (Y)(MED NOSE)(100MIL)	EA	0	677	2001	ELIM EXT PAV MRK & MRKS (4")	LF	0
666	2142	REF PAV MRK TY II (W) 4" (BRK)	LF	280	677	2003	ELIM EXT PAV MRK & MRKS (8")	LF	0
666	2145	REF PAV MRK TY II (W) 4" (SLD)	LF	1086	677	2005	ELIM EXT PAV MRK & MRKS (12")	LF	0
666	2151	REF PAV MRK TY II (W) 8" (DOT)	LF	0	677	2007	ELIM EXT PAV MRK & MRKS (24")	LF	0
666	2153	REF PAV MRK TY II (W) 8" (SLD)	LF	374	677	2008	ELIM EXT PAV MRK & MRKS (ARROW)	EA	0

REV. NO.	DATE	REVISION	BY
△			
△			
△			

PBSJ
an Atkins company TBPE REG. # F-474

Texas Department of Transportation
Austin District
©2011 by TxDOT

SH 45 / O'CONNOR DRIVE
PAVEMENT MARKING LAYOUT
O'CONNOR DRIVE
STA 81+00 TO 88+00

SCALE: 1"=100' SHEET 1 OF 1

DESIGNED: EG	FED. RD DIV. No.	STATE	PROJECT No.			HIGHWAY No.
CHECKED: SED	6	TEXAS				LP 1/SH 45
DRAWN: EG	STATE DISTRICT	COUNTY	CONTROL No.	SECTION No.	JOB No.	SHEET No.
CHECKED: SED	AUSTIN	WILLIAMSON	0683	06	027	669

PLOT DRIVER: RD*11x17*PDF.plt
PEN TABLE: plotord*ocon.tbl
FILE: r:\trans-design\o'connor\cadd\sns\OC45PM*OCON01.dgn

DISCLAIMER: The use of this standard is governed by the "Texas Engineering Practice Act". No warranty of any kind is made by TxDOT for any purpose whatsoever. TxDOT assumes no responsibility for the conversion of this standard to other formats or for incorrect results or damages resulting from its use.

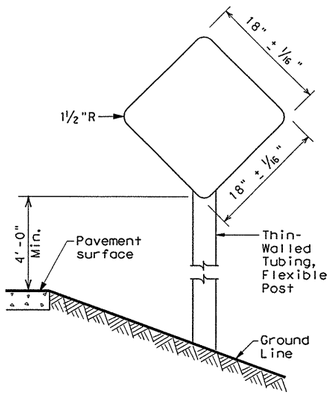

TYPE 1
18" x 18"
Yellow
Type E Sheeting

TYPE 4
18" x 18"
Red
Type D Sheeting

Use Sign blank 0.080" thick sheet aluminum conforming to ASTM B-209 Alloy 6061-T6. Use reflective sheeting in accordance with DMS 8300.

TYPES 1 and 4

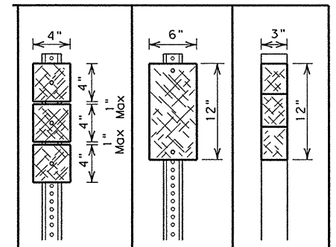

Number of Reflectors	X	Y	Z
Post	WC	WC	FLX

NOTES
1. All type 2 object markers are yellow
2. WC-wing channel post, 1.12 lbs/ft steel per ASTM A 1011 SS Gr 50, or ASTM A499
3. FLX-flexible post (embedded and surface mount)

Typically used on bridge rail approach ends, some bridge abutments and at bridge rail exits on two-lane, two-way roadways

TYPE 2

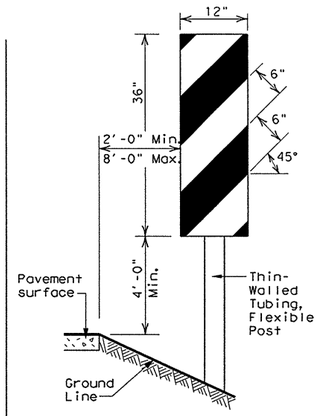

OM-3 Directions
L - Placed on Left Side
R - Placed on Right Side
C - Placed on Center

Use Sign blank .080" thick sheet aluminum conforming to ASTM B-209 Alloy 6061-T6. Use reflective sheeting in accordance with DMS 8300, Type E. Use at bridges with no approach rails.

TYPE 3

OBJECT MARKERS

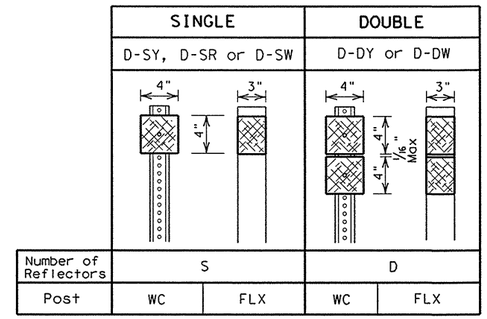

NOTES
1. Reflector Units: W-White, R-Red, Y-Yellow
2. Length of post may vary to meet field conditions.
3. WC-wing channel post, 1.12 lbs/ft Steel per ASTM A 1011 SS Gr 50, or ASTM A499
4. FLX-flexible post (embedded and surface mount)

DELINEATORS

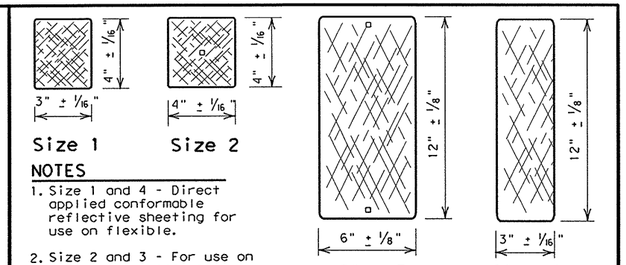

NOTES
1. Size 1 and 4 - Direct applied conformable reflective sheeting for use on flexible.
2. Size 2 and 3 - For use on Wing Channel post only. Use approved metal, plastic or fiberglass backplate with 17/64" square mounting holes.
3. Yellow, White & Red: Conformable Reflective Sheeting as per DMS 8300.

REFLECTOR UNIT SIZES

NOTES
1. A reflector unit or sheeting (per DMS 8600) attached to a bracket to facilitate the mounting of the reflector on concrete traffic barrier, railing, metal beam guard fence (MBGF) or other locations shown on the plans. A list of appoved barrier reflectors can be found at: www.txdot.gov
2. Yellow, White and Red: Conformable Reflective Sheeting as per DMS 8300.

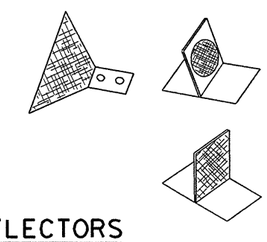

BARRIER REFLECTORS

D & OM DESCRIPTIVE CODES

INSTL DEL ASSM (D-XX)SZ X (XXX)XXX(XX)

NUMBER OF REFLECTORS
S = Single
D = Double

COLOR OF REFLECTORS
W = White
Y = Yellow
R = Red

REFLECTOR UNIT SIZE
1 or 2

TYPE OF POST OR DELINEATOR
WC = Wing Channel Post
FLX = Flexible Post
TYC = Barrier Reflector

TYPE OF MOUNT
GND = Embedded (drivable or set in concrete)
CTB = Concrete Barrier Mount
GF1 or GF2 = Guard Fence Attachment
SRF = Surface Mount

DIRECTION
If Required
BI = Bi-Directional
BR = Bi-Directional with red on back

INSTL OM ASSM (OM-XX) (XXX)XXX(XX)

TYPE OF OBJECT MARKER
1, 2, 3, or 4

NUMBER OF REFLECTORS OR DIRECTION
X = 3-Size 2 reflector units (Type 2 only)
Y = 1-Size 3 reflector unit (Type 2 only)
Z = 3-Size 1 or 1-Size 4 reflector unit(s) (Type 2 only)
L = Left Side (Type 3 Object Marker only)
R = Right Side (Type 3 Object Marker only)
C = Center (Type 3 Object Marker only)

TYPE OF POST
WC = Wing Channel Post
FLX = Flexible Post
TWT = Thin Walled Tubing

TYPE OF MOUNT
GND = Embedded (drivable or set in concrete)
SRF = Surface Mount

DIRECTION
If Required
BI = Bi-Directional

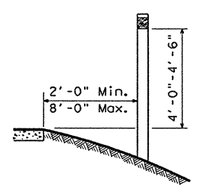

TYPICAL INSTALLATION

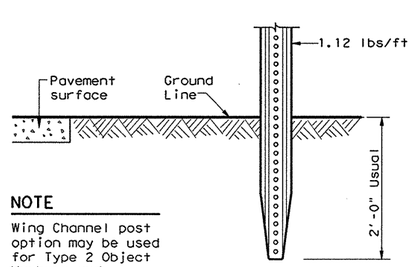

NOTE
Wing Channel post option may be used for Type 2 Object Markers and delineators only.

WING CHANNEL

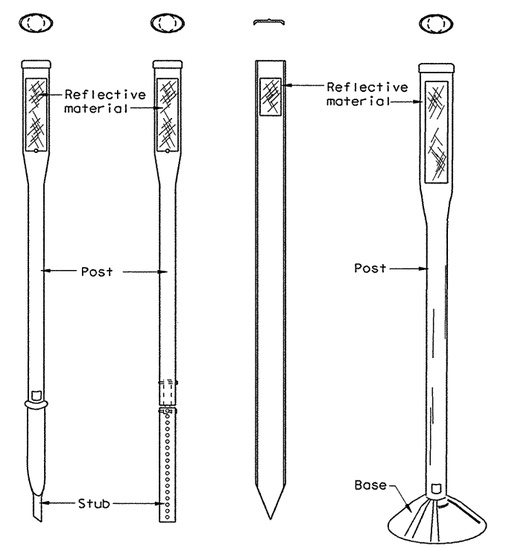

EMBEDDED **SURFACE MOUNT**

NOTES
1. See Material Producer List for approved devices.
2. Install to manufacturer's recommenations.

FLEXIBLE POSTS

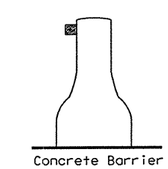

CTB

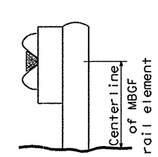

GF1

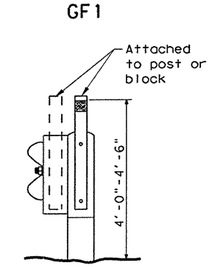

GF2

BARRIER REFLECTORS

GENERAL NOTES
1. Place delineators on a section of roadway the same distance from the edge of pavement.
2. Where a restriction prevents consistent placement from the pavement edge, place the affected object markers in line with the innermost edge of the obstruction.
3. When object markers are more than 8'-0" from the edge of the pavement, it may not be possible to maintain a height of 4'-0"-4'-6". If this is the case, place the object markers as close to the desired height as possible.
4. Install all delineators, object markers and barrier reflectors in accordance with the manufacturer's recommendation.

DEPARTMENTAL MATERIAL SPECIFICATIONS	
FLEXIBLE DELINEATOR & OBJECT MARKER POSTS (EMBEDDED & SURFACE MOUNT TYPES)	DMS-4400
SIGN FACE MATERIALS	DMS-8300
DELINEATORS AND OBJECT MARKERS	DMS-8600

Texas Department of Transportation
Traffic Operations Division

DELINEATOR & OBJECT MARKER INSTALLATION AND MATERIAL DESCRIPTION D & OM(1)-10

© TxDOT August 2004

REVISIONS
10-09
4-10

DN: TXDOT	CK: TXDOT	DW: TXDOT	CK: TXDOT
CONT	SECT	JOB	HIGHWAY
0683	06	027	LP 1/SH 45
DIST		COUNTY	SHEET NO.
AUS		WILLIAMSON	670

DATE:
FILE:

204

DISCLAIMER: The use of this standard is governed by the "Texas Engineering Practice Act". No warranty of any kind is made by TxDOT for any purpose whatsoever. TxDOT assumes no responsibility for the conversion of this standard to other formats or for incorrect results or damages resulting from its use.

Type of Road or Condition		Condition for use: Required (shall be used)	Recommended (should be used)	Optional (may be used)	Prohibited (cannot be used)	Delineator Spacing
Freeways or Expressways	Tangent	D-SW on right or raised pavement markers				200-530 ft
	Curve	D-SW on right				see Table
	Ramp	D-SW on one side See Note 1 *	On outside of interchange ramp curves			
Other Than Freeways or Expressways	Tangent			D-SW on right or left side	D-SY or D-DY on left side of two-way roads	200-530 ft
	Curve					see Table
Acceleration and Deceleration Lanes			D-DW or D-DY			100 ft spacing
Crossovers			D-DY on left side of through road on far side of crossover			
Wrong-way				D-SR for wrong-way traffic		
Pavement Narrowing (lane merge)				D-SW (right) or D-SY (left) adjacent to affected lane for full length of transition See Note 2 **		
Truck escape ramps			D-SR on both sides of ramp			50 ft spacing
With guard fence, bridge rail, or concrete barrier						100 ft use min. of 3

General Notes: Unless indicated otherwise, the color of a delineators must conform to the color of the pavement edge line on the side of the road where the delineators are placed. Barrier markers can be used to replace required delineators. DS-R can be mounted on the back side of existing delineator posts.

* 1. Delineation required on one side either SY or SW.

** 2. Minimum of 3.

Suggested Spacing for Highway Delineators on Horizontal Curves △

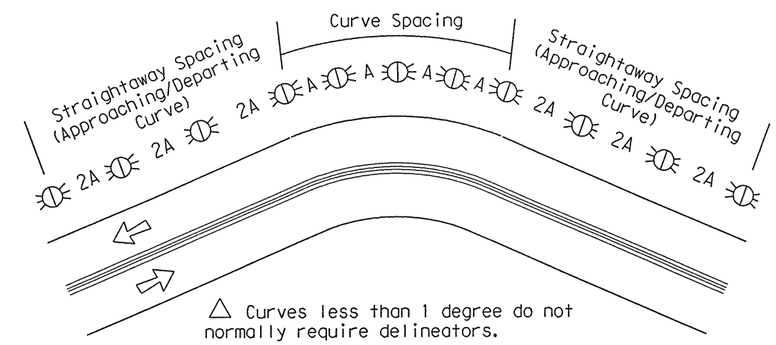

△ Curves less than 1 degree do not normally require delineators.

Suggested Spacing for Chevrons on Horizontal Curves △

The Chevron may be used to provide additional emphasis and guidance for a change in horizontal alignment. A Chevron may be used as a supplement to delineation.

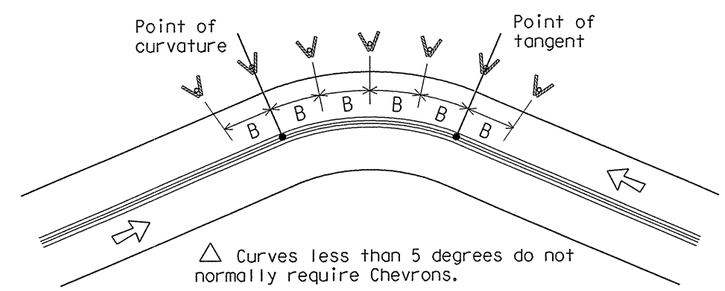

△ Curves less than 5 degrees do not normally require Chevrons.

When degree of curve or radius is known

When degree of curve or radius is not known

Advisory Speed (MPH)	Spacing in Curve	Spacing in Strtawy	Chevron Spacing in Curve
	A	2xA	B
65	130	260	
60	110	220	
55	100	200	160
50	85	170	160
45	75	150	160
40	70	140	120
35	60	120	120
30	55	110	80
25	50	100	80
20	40	80	80
15	35	70	40

If the degree of curve is not known, delineator spacing may be determined based on the Advisory Speed of the curve. Use the delineator curve spacing for each Advisory Speed (MPH).

Degree of Curve	Feet: Radius of Curve	Spacing in Curve	Spacing in Strtawy	Chevron Spacing in Curve
		A	2A	B
1	5730	225	450	
2	2865	160	320	
3	1910	130	260	
4	1433	110	220	
5	1146	100	200	160
6	955	90	180	160
7	819	85	170	160
8	716	75	150	160
9	637	75	150	120
10	573	70	140	120
11	521	65	130	120
12	478	60	120	120
13	441	60	120	120
14	409	55	110	80
15	382	55	110	80
16	358	55	110	80
19	302	50	100	80
23	249	40	80	80
29	198	35	70	40
38	151	30	60	40
57	101	20	40	40

Curve delineator approach and departure spacing should include 3 delineators spaced at 2A. This spacing should be used during design preparation or when the degree of curve is known.

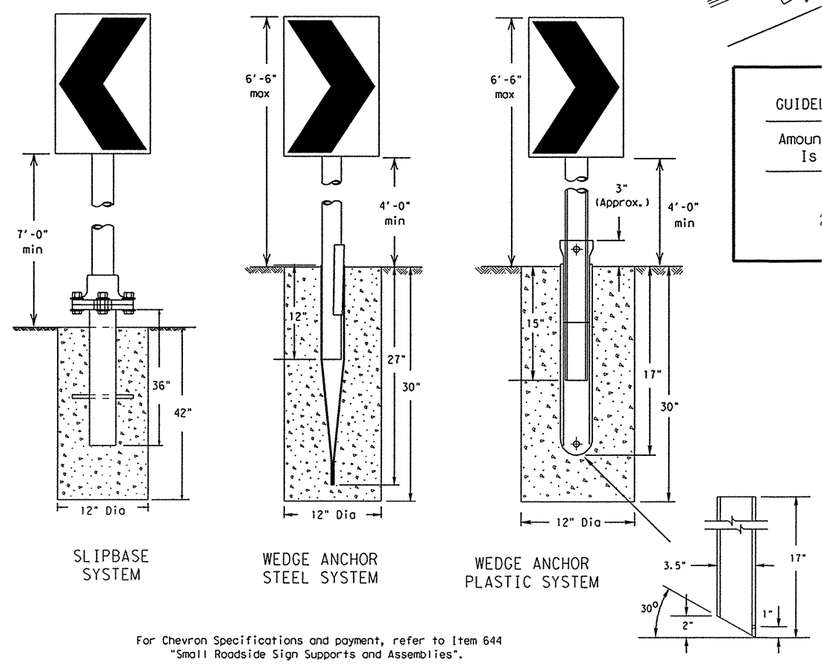

For Chevron Specifications and payment, refer to Item 644 "Small Roadside Sign Supports and Assemblies".

GUIDELINES FOR USE OF WARNING DEVICES AT CURVES WITH ADVISORY SPEED LIMITS

Amount by which Advisory Speed Is less than Posted Speed	Warning Devices Needed
0 to 14 MPH	RPMs
15 to 24 MPH	RPMs and Delineators
25 MPH or greater	RPMs and Chevrons

Texas Department of Transportation
Traffic Operations Division

TYPICAL DELINEATOR & OBJECT MARKER PLACEMENT DETAILS

D & OM(2)-04

© TxDOT August 2004

REVISIONS

DN: TXDOT	CK: TXDOT	DW: TXDOT	CK: TXDOT
CONT	SECT	JOB	HIGHWAY
0683	06	027	LP 1/SH 45
DIST		COUNTY	SHEET NO.
AUS		WILLIAMSON	671

DATE:
FILE:

208

DISCLAIMER: The use of this standard is governed by the "Texas Engineering Practice Act". No warranty of any kind is made by TxDOT for any purpose whatsoever. TxDOT assumes no responsibility for the conversion of this standard to other formats or for incorrect results or damages resulting from its use.

Two-way, Two lane Roadway with Reduced Width Approach Rail

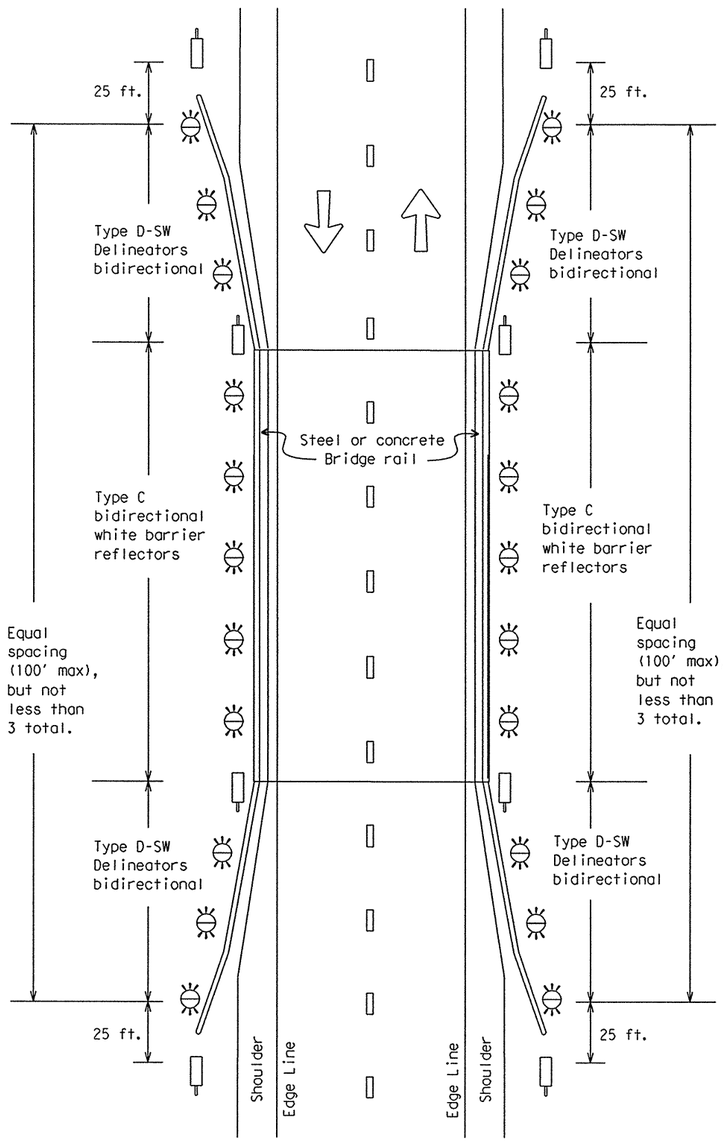

Two-way, Two lane Roadway with Metal Beam Guard Fence (MBGF)

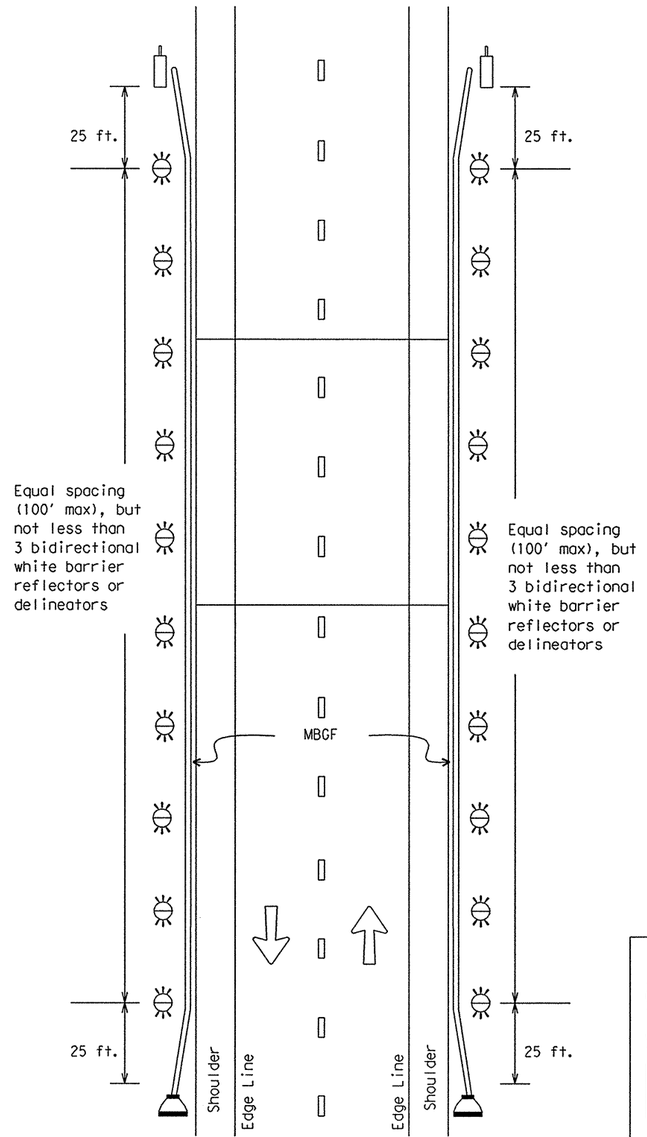

Terminal Ends include OB-3F.
There is no need to install an OM-2 in front of terminal.

Two-way, Two lane Roadway Bridge with No Approach Rail

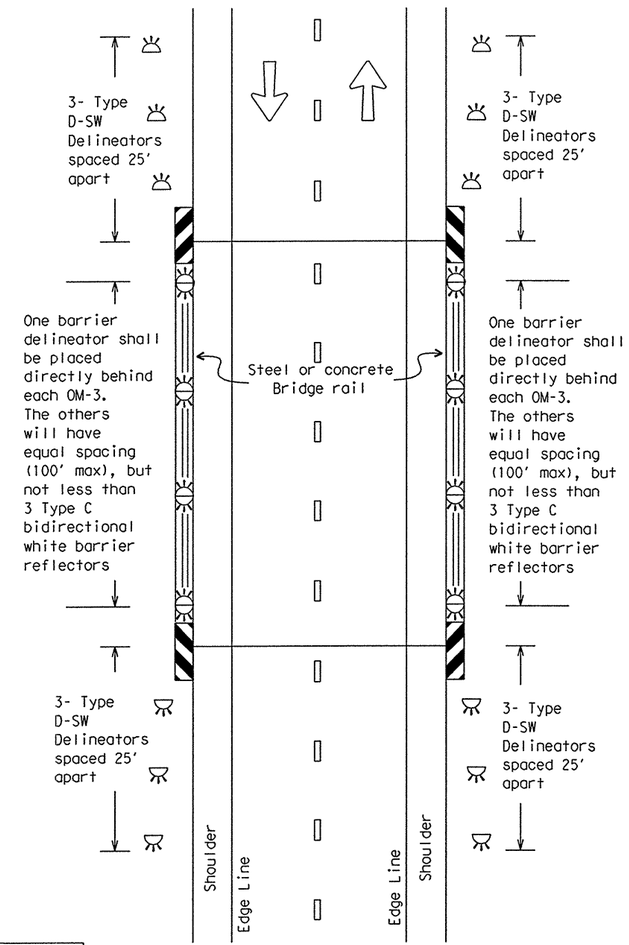

LEGEND

- Bidirectional Delineator
- Delineator
- OM-3
- OM-2
- Terminal End

Texas Department of Transportation
Traffic Operations Division

DELINEATOR & OBJECT MARKER PLACEMENT DETAILS

D & OM(3)-04

© TxDOT August 2004

REVISIONS

DN: TXDOT	CK: TXDOT	DW: TXDOT	CK: TXDOT

CONT	SECT	JOB	HIGHWAY
0683	06	027	LP 1/SH 45

DIST	COUNTY	SHEET NO.
AUS	WILLIAMSON	672

DATE:
FILE:

DISCLAIMER: The use of this standard is governed by the "Texas Engineering Practice Act". No warranty of any kind is made by TxDOT for any purpose whatsoever. TxDOT assumes no responsibility for the conversion of this standard to other formats or for incorrect results or damages resulting from its use.

Continuous Concrete Barrier

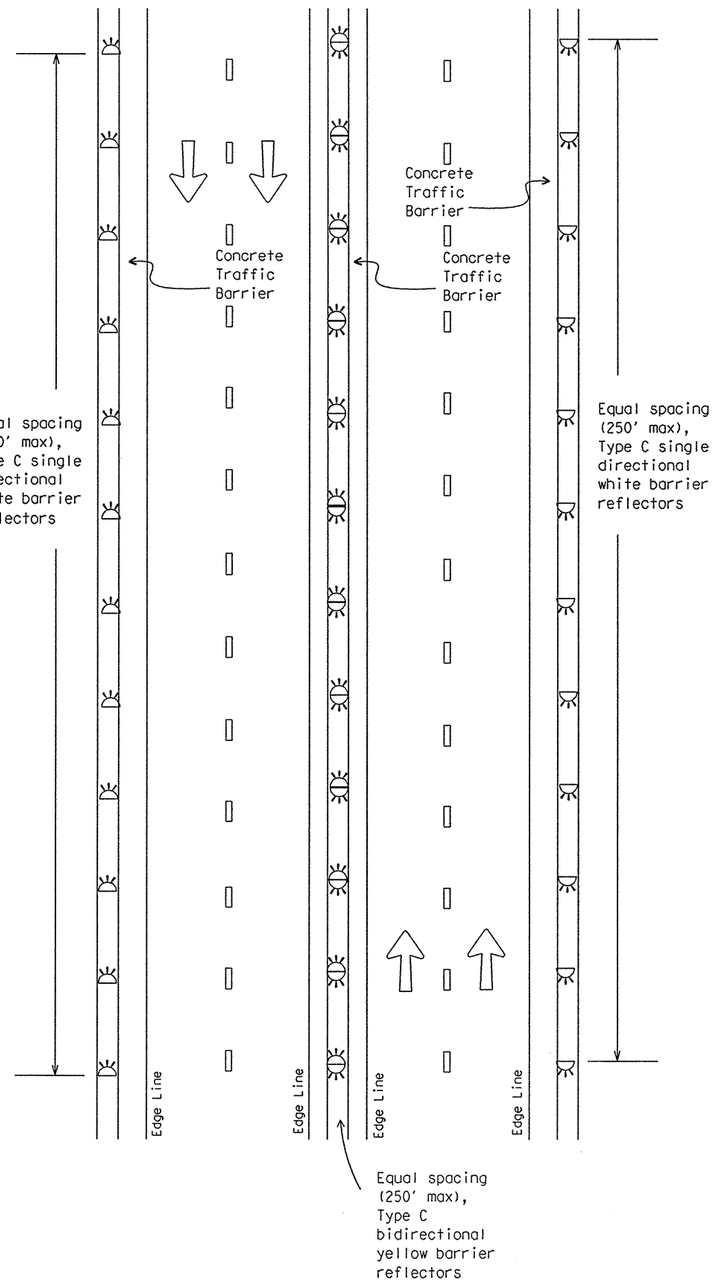

Multi-lane Undivided, Two-way Roadway with Metal Beam Guard Fence (MBGF)

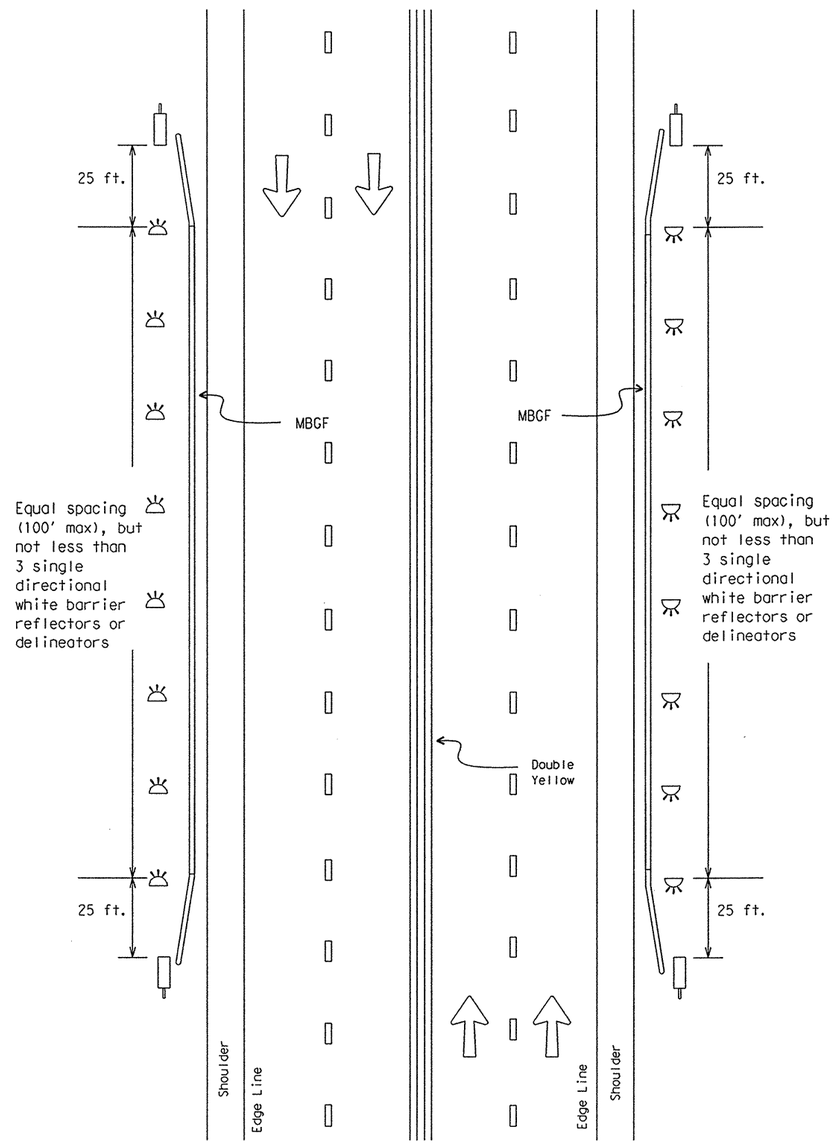

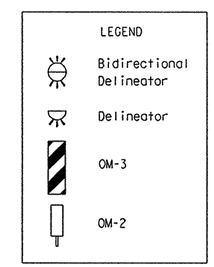

Texas Department of Transportation
Traffic Operations Division

DELINEATOR & OBJECT MARKER PLACEMENT DETAILS

D & OM(4)-04

© TxDOT August 2004

REVISIONS

DN: TXDOT	CK: TXDOT	DW: TXDOT	CK: TXDOT
CONT	SECT	JOB	HIGHWAY
0683	06	027	LP 1/SH 45
DIST		COUNTY	SHEET NO.
AUS		WILLIAMSON	673

DATE:
FILE:

DISCLAIMER: The use of this standard is governed by the "Texas Engineering Practice Act". No warranty of any kind is made by TxDOT for any purpose whatsoever. TxDOT assumes no responsibility for the conversion of this standard to other formats or for incorrect results or damages resulting from its use.

Divided Roadway with Metal Beam Guard Fence

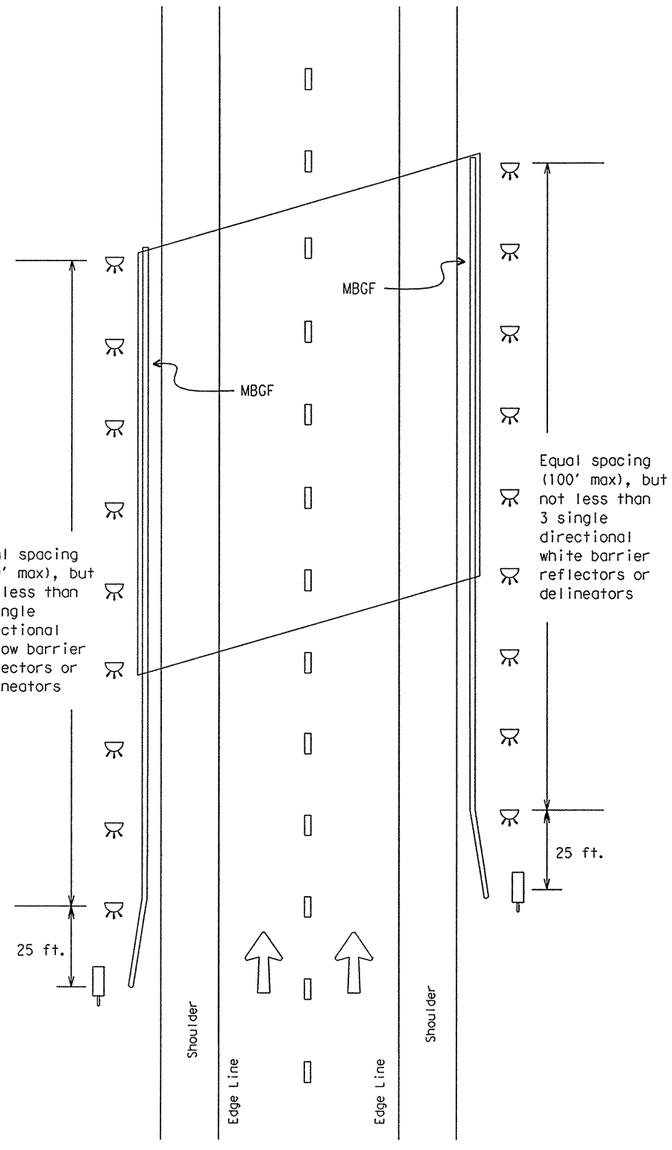

Freeway Delineation including Ramps

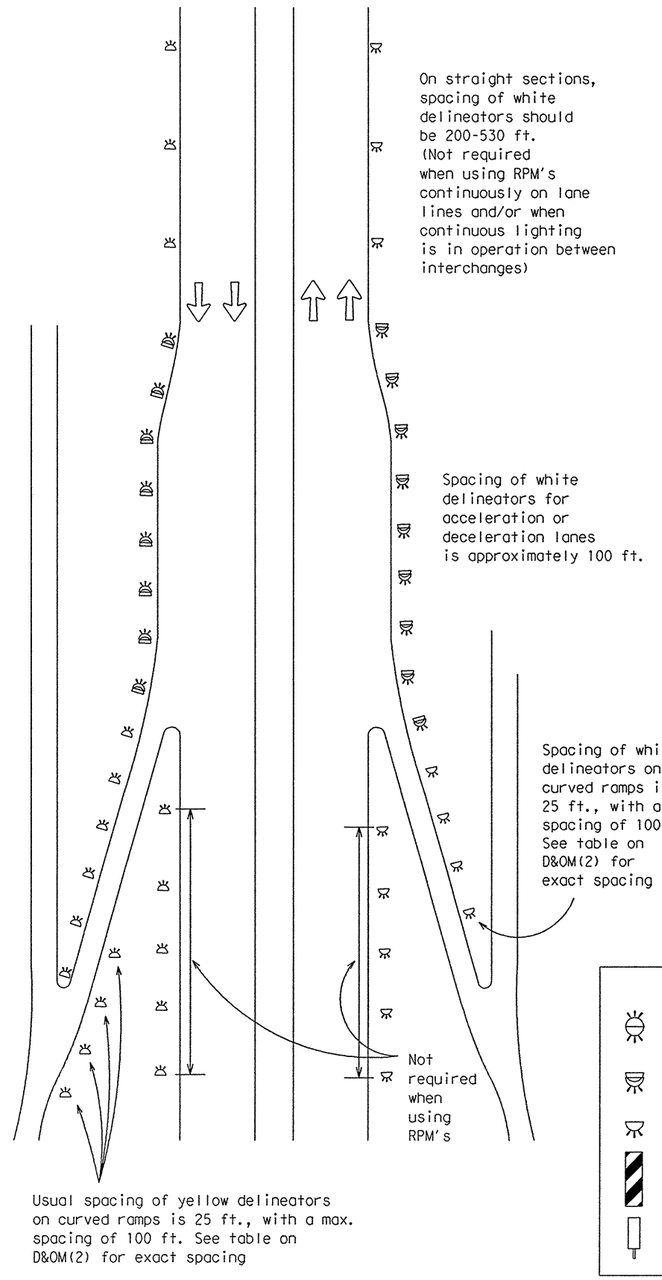

For Culverts without MBGF

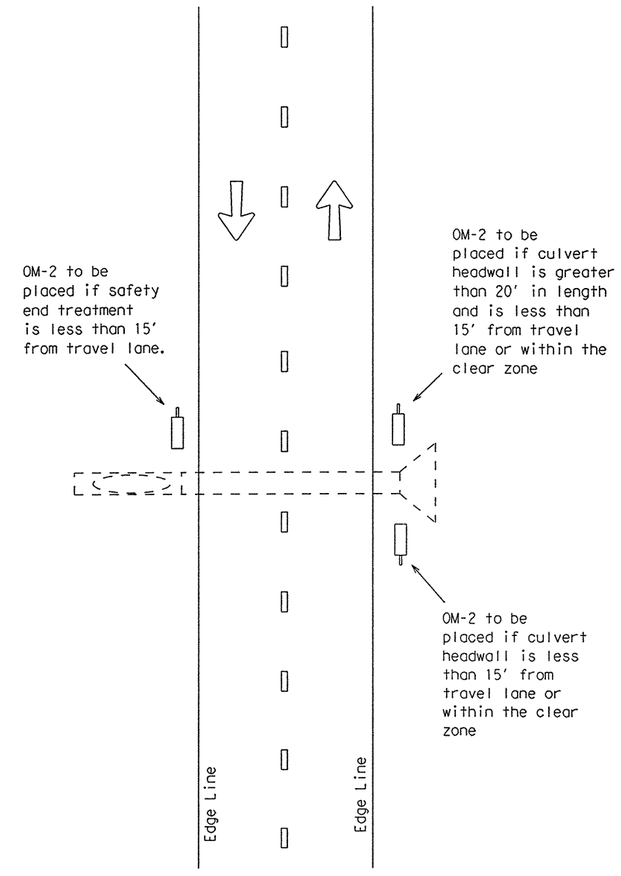

LEGEND

- Bidirectional Delineator
- Double Delineator
- Delineator
- OM-3
- OM-2

Texas Department of Transportation
Traffic Operations Division

DELINEATOR & OBJECT MARKER PLACEMENT DETAILS

D & OM(5)-04

© TxDOT August 2004

REVISIONS	DN: TXDOT	CK: TXDOT	DW: TXDOT	CK: TXDOT
	CONT	SECT	JOB	HIGHWAY
	0683	06	027	LP 1/SH 45
	DIST		COUNTY	SHEET NO.
	AUS		WILLIAMSON	674

DATE:
FILE:

20F

DISCLAIMER: The use of this standard is governed by the "Texas Engineering Practice Act". No warranty of any kind is made by TxDOT for any purpose whatsoever. TxDOT assumes no responsibility for the conversion of this standard to other formats or for incorrect results or damages resulting from its use.

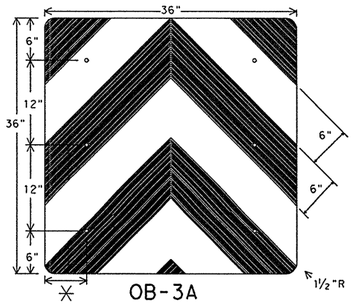

OB-3A

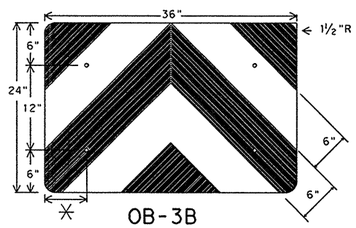

OB-3B

✳ adjust to fit attenuator per manufacturer's recommendation, or as directed by the Engineer.

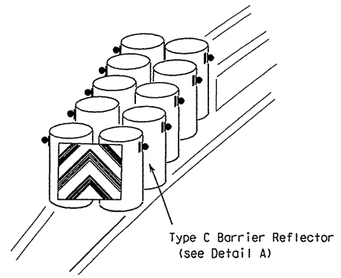

Object Marker blank to be 0.08" thick sheet aluminum conforming to ASTM B-209 Alloy 6061-T6 aluminum as per Specification DMS 7110.

Mounting should be flush with top of VIA. Minimum size 36" x 24".

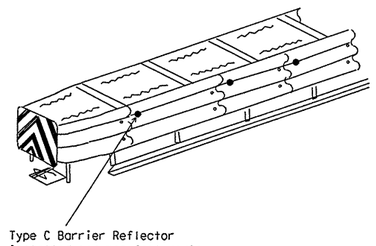

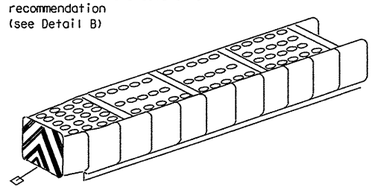

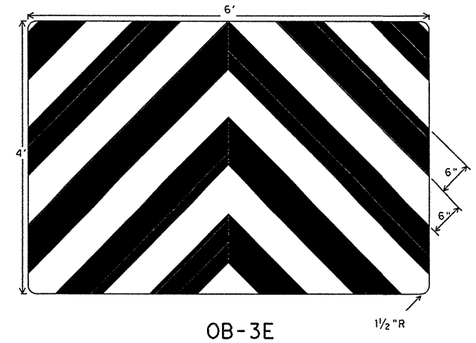

OB-3E

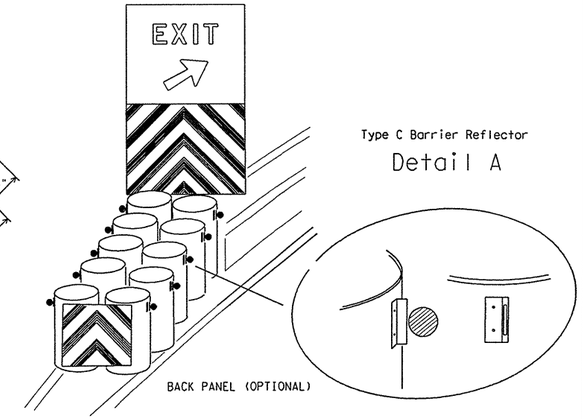

GENERAL NOTES:

1. Back panel will be mounted independent of the attenuator. The minimum mounting height is flush with the top of the attenuator.
2. Attenuator may have additional yellow reflective and black striping, and/or reflectors placed on sides. CHEVRONS (W1-8) may be erected to delineate roadway curvature beyond the attenuator. These additional devices will be installed if required elsewhere in the plans.
3. Mount Back Panel per details on SMD Standards, or as detailed elsewhere in the plans.

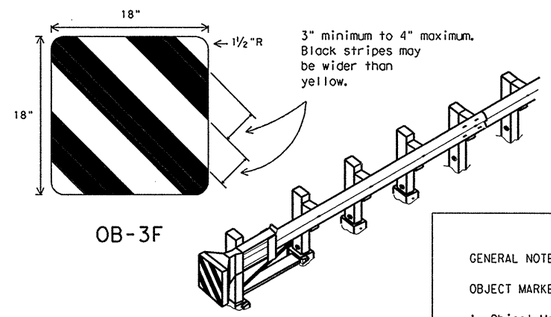

OB-3F

TYPICAL GUARDRAIL
END TREATMENT

GENERAL NOTES:

OBJECT MARKERS

1. Object Markers shall conform to the Texas MUTCD and meet the color and reflectivity requirement of Department Material Specification DMS 8300, Type C. Background shall be yellow reflective and Chevron shall be black.
2. OB-3F is intended for use only with guardrail terminal ends. OM-BF may be fabricated from adhesive backed reflective sheeting applied directly to guardrail end treatment, or applied directly to an "end cap" as per the manufacturer's recommendation. Direct applied sheeting shall provide a smooth surface and have no wrinkles, air bubbles, cuts or tears.
3. Size may be reduced to fit smaller devices, however, the minimum size shall be:
   (a) 24 x 24 inch for attenuators, and
   (b) 18 x 18 inches for guardrail end treatments.
4. Pop rivets, screws, or nuts and bolts may be used to attach object markers and reflectors. Holes, slots or other openings may be cut or drilled through object markers to allow cable or other attachments.
5. When traffic passes only on one side of attenuator, only the OM-3 marker should be installed. OM-3 should be installed per the requirements of D & OM Standards with a minimum mounting height of 18 inches.

TYPE C REFLECTORS

1. Type C delineators shall consist of a Type A or Type B reflector unit (per DMS 8600) attached to a bracket to facilitate delineator mounting on attenuators, guardrails and concrete traffic barriers.
2. Type C reflectors may also be used to delineate side of attenuator, guardrail and concrete traffic barrier.
3. Type C reflectors shall meet the requirements of DMS 8600.

A list of approved Type C Delineators can be found at:

ftp//ftp.dot.state.tx.us/pub/txdot-info/cmd/mpl/typecdeln.pdf

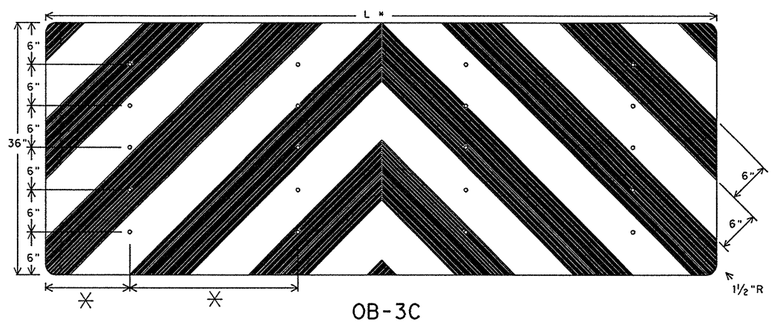

OB-3C

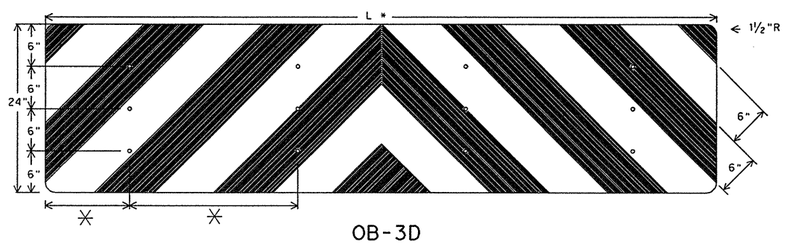

OB-3D

✳ spacing adjusted to attach through centerline of drum, per attenuator manufacturers recommendation, or as directed by the Engineer.

Mounting should be flush with top of attenuator. Minimum size 96" x 24".

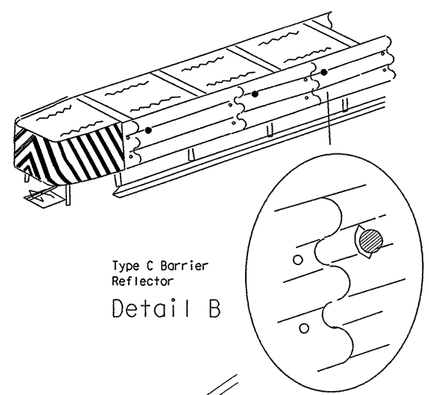

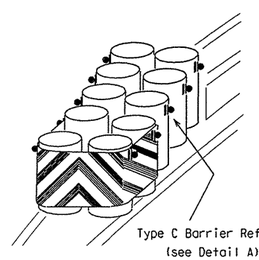

Texas Department of Transportation
Traffic Operations Division

DELINEATORS & OBJECT MARKERS FOR VEHICLE IMPACT ATTENUATORS

D & OM(VIA)-04

© TxDOT December 1989

DN: TXDOT	CK: TXDOT	DW: TXDOT	CK: TXDOT

REVISIONS: 4-92, 8-95, 4-98, 8-04

CONT	SECT	JOB	HIGHWAY
0683	06	027	LP 1/SH 45
DIST		COUNTY	SHEET NO.
AUS		WILLIAMSON	675

2 OF

DATE:
FILE:

DISCLAIMER
The use of this standard is governed by the "Texas Engineering Practice Act". No warranty of any kind is made by TxDOT for any purpose whatsoever. TxDOT assumes no responsibility for the conversion of this standard to other formats or for incorrect results or damages resulting from its use.

TWO LANE TWO-WAY ROADWAY WITH OR WITHOUT SHOULDERS

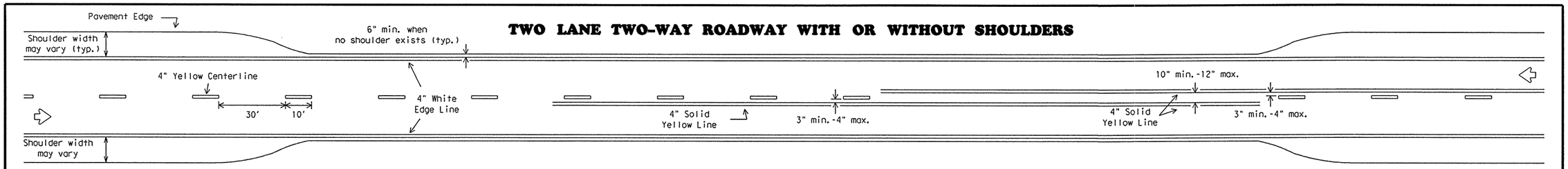

CENTERLINE AND LANE LINES FOUR LANE TWO-WAY ROADWAY WITH OR WITHOUT SHOULDERS

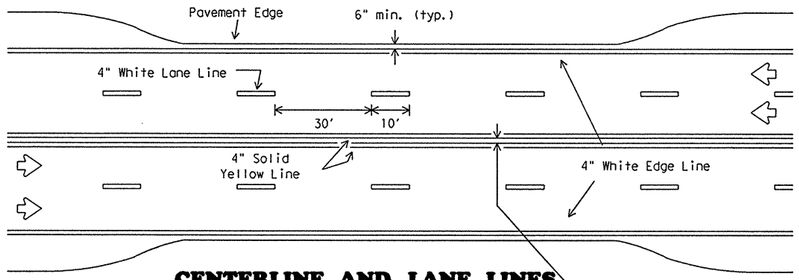

EDGE LINE AND LANE LINES ONE-WAY ROADWAY WITH OR WITHOUT SHOULDERS

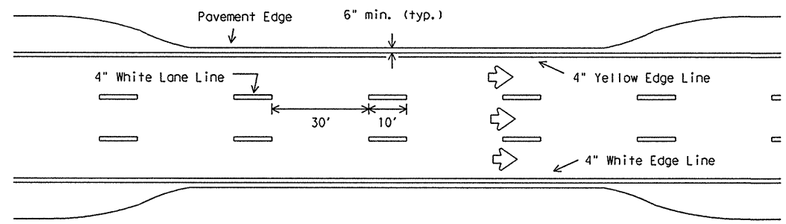

GUIDE FOR PLACEMENT OF STOP LINES, EDGE LINE & CENTERLINE

Based on Traveled Way and Pavement Widths for Undivided Highways

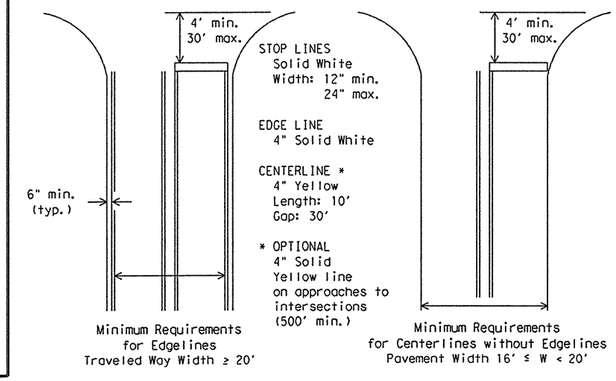

FOUR LANE DIVIDED ROADWAY INTERSECTIONS

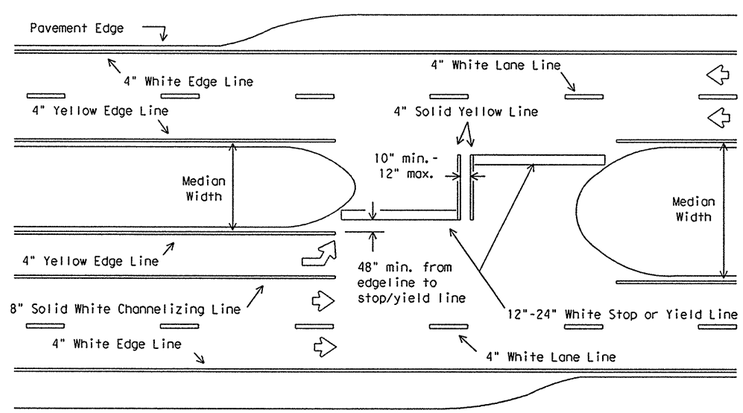

All medians shall be field measured to determine the location of necessary striping. Stop/Yield bars and centerlines shall be placed when the median width is greater than 30 ft. The median width is defined as the area between two roadways of a divided highway measured from edge of traveled way to edge of traveled way. The median excludes turn lanes. The median width might be different between intersections, interchanges and of opposite approaches of the same intersection. The narrow median width will be the controlling width to determine if markings are required.

ROADWAYS WITH REDUCED SHOULDER WIDTHS ACROSS BRIDGE OR CULVERT

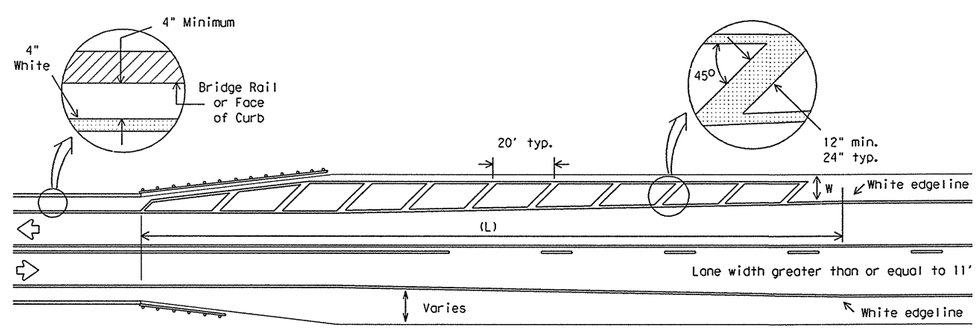

NOTES:

1. No-passing zone on bridge approach is optional but if used, it shall be a minimum 500 feet long.
2. For crosshatching length (L) see Table 1.
3. The width of the offset (W) and the required crosshatching width is the full shoulder width in advance of the bridge.
4. The crosshatching should be required if the shoulder width in advance of the bridge is 4 foot or wider and any reduction in shoulder width across the bridge occurs.
5. For guard fence details, refer elsewhere in the plans.

TABLE 1 - TYPICAL LENGTH (L)

Posted Speed *	Formula
30, 35, 40	$L = \frac{WS^2}{60}$
45, 50, 55, 60, 65, 70	L=WS

* 85th Percentile Speed may be used on roads where traffic speeds normally exceed the posted speed limit. Crosshatching length should be rounded up to nearest 5 foot increment.

L=Length of Crosshatching (FT.) W=Width of Offset (FT.)
S=Posted Speed (MPH)

EXAMPLES:

An 8 foot shoulder in advance of a bridge reduces to 4 feet on a 70 MPH roadway. The length of the cross-hatching should be:

$L = 8 \times 70 = 560$ ft.

A 4 foot shoulder in advance of a bridge reduces to 2 feet on a 40 MPH roadway. The length of the cross-hatching should be:

$L = 4(40)^2 / 60 = 106.67$ ft. rounded to 110 ft.

GENERAL NOTES:

Edgeline striping shall be as shown in the plans or as directed by the Engineer. The edgeline should typically be placed a minimum of 6 inches from the edge of pavement. This distance may vary due to pavement raveling or other conditions. Edgelines are not required in curb and gutter sections of roadways.

The traveled way includes only that portion of the roadway used for vehicular travel and not the parking lanes, sidewalks, berms and shoulders. The traveled ways shall be measured from the inside of edgeline to inside of edgeline of a two lane roadway.

All pavement marking materials shall meet the required Departmental Material Specifications as specified by the plans.

SPECIFICATION REFERENCE TABLE

MATERIAL SPECIFICATIONS	
PAVEMENT MARKERS (REFLECT.)	DMS-4200
EPOXY	DMS-6100
BITUMINOUS ADHESIVE FOR PAVEMENT MARKERS	DMS-6130

YIELD LINES

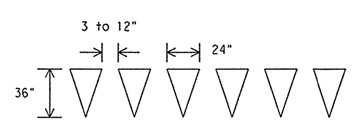

FOR POSTED SPEED EQUAL TO OR GREATER THAN 45 MPH

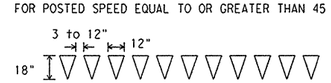

FOR POSTED SPEED EQUAL TO OR LESS THAN 40 MPH

STANDARD PLANS
Texas Department of Transportation
Traffic Operations Division

TYPICAL STANDARD PAVEMENT MARKINGS

PM(1)-03

© TxDOT November 1978	DN: BAS	CK: GRB	DW: FDN	CK: CAL		NEG NO.:
REVISIONS 8-95, 5-00, 8-00, 3-03	STATE DISTRICT: AUSTIN	FEDERAL REGION: 6	FEDERAL AID PROJECT			SHEET 676
	COUNTY: WILLIAMSON		CONTROL-SECT-JOB: 0683-06-027			HIGHWAY SH 45, LOOP 1

22A

ACC:
SPLATED

DISCLAIMER: The use of this standard is governed by the "Texas Engineering Practice Act". No warranty of any kind is made by TxDOT for any purpose whatsoever. TxDOT assumes no responsibility for the conversion of this standard to other formats or for incorrect results or damages resulting from its use.

REFLECTIVE RAISED PAVEMENT MARKERS FOR VEHICLE POSITIONING GUIDANCE

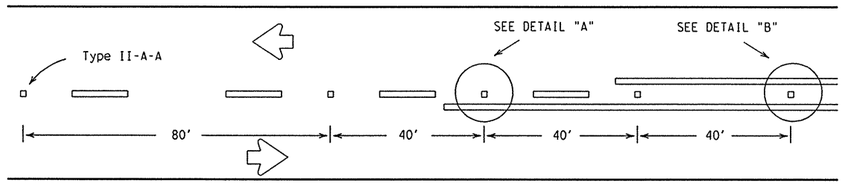

CENTERLINE FOR ALL TWO LANE ROADWAYS

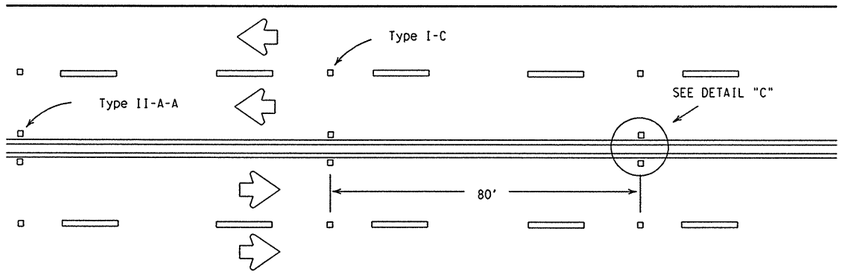

CENTERLINE & LANE LINES FOR FOUR LANE TWO-WAY HIGHWAYS

Raised pavement marker Type I-C, clear face toward normal traffic, shall be placed on 80-foot centers.

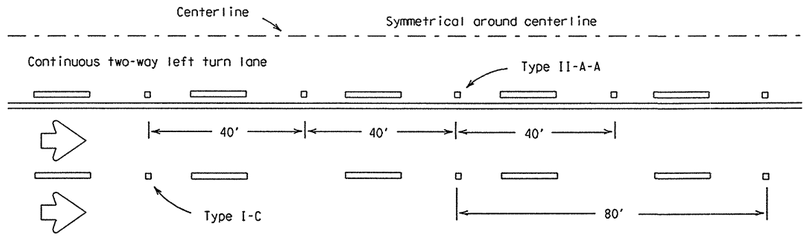

CENTERLINE AND LANE LINES FOR TWO-WAY LEFT TURN LANE

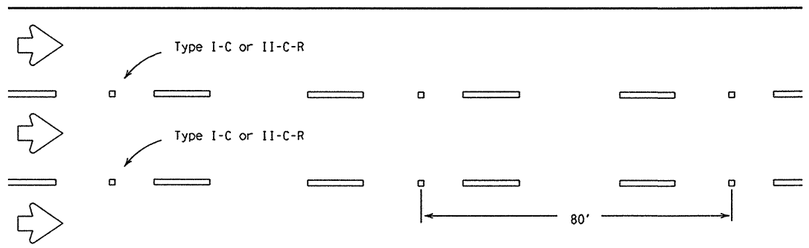

LANE LINES FOR ONE-WAY ROADWAY (NON-FREEWAY FACILITIES)

Raised pavement markers Type II-C-R shall have clear face toward normal traffic and red face toward wrong-way traffic.

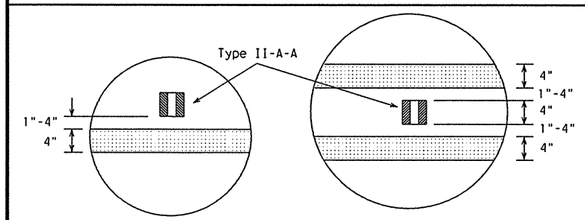

DETAIL "A" DETAIL "B" DETAIL "C"

RAISED PAVEMENT MARKERS

(REFLECTORIZED)

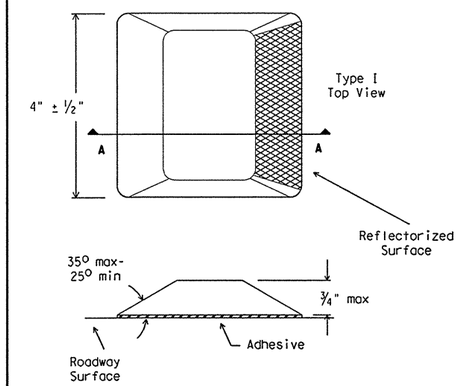

SECTION A

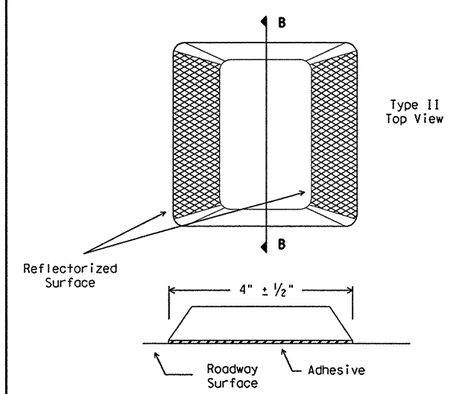

SECTION B

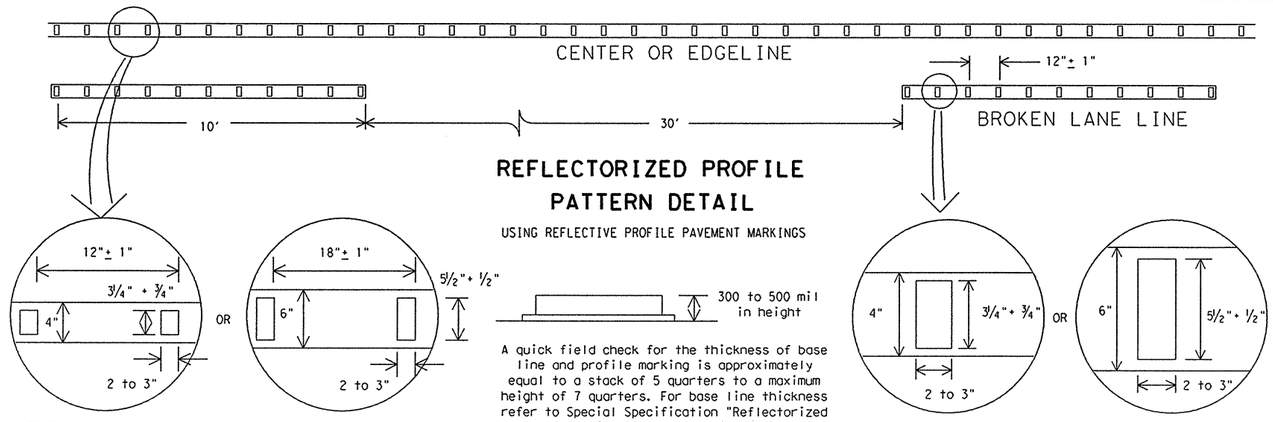

4" EDGE LINE OR CENTERLINE

OPTIONAL 6" EDGE LINE OR CENTERLINE

4" LANE LINE

OPTIONAL 6" LANE LINE

REFLECTORIZED PROFILE PATTERN DETAIL

USING REFLECTIVE PROFILE PAVEMENT MARKINGS

A quick field check for the thickness of base line and profile marking is approximately equal to a stack of 5 quarters to a maximum height of 7 quarters. For base line thickness refer to Special Specification "Reflectorized Profile Pavement Markings."

NOTE:

Profile markings shall not be placed on roadways with a posted speed limit of 45 MPH or less.

GENERAL NOTES:

All raised pavement markers placed in broken lines shall be placed in line with and midway between the stripes.

On concrete pavements the raised pavement markers should be placed to one side of the longitudinal joints.

All pavement marking materials shall meet the required Departmental Material Specifications as specified by the plans.

SPECIFICATION REFERENCE TABLE

MATERIAL SPECIFICATIONS	
PAVEMENT MARKERS (REFLECT.)	DMS-4200
EPOXY	DMS-6100
BITUMINOUS ADHESIVE FOR PAVEMENT MARKERS	DMS-6130

Texas Department of Transportation
Traffic Operations Division

POSITION GUIDANCE USING RAISED MARKERS REFLECTORIZED PROFILE MARKINGS

PM(2)-10

© TxDOT April 1977

REVISIONS	DN: TXDOT	CK: TXDOT	DW: TXDOT	CK: TXDOT
4-92 2-10	CONT	SECT	JOB	HIGHWAY
5-00	0683	06	027	LP 1/SH 45
8-00	DIST		COUNTY	SHEET NO.
2-08	AUS		WILLIAMSON	677

228

DATE:
FILE:

DISCLAIMER: The use of this standard is governed by the "Texas Engineering Practice Act". No warranty of any kind is made by TxDOT for any purpose whatsoever. TxDOT assumes no responsibility for the conversion of this standard to other formats or for incorrect results or damages resulting from its use.

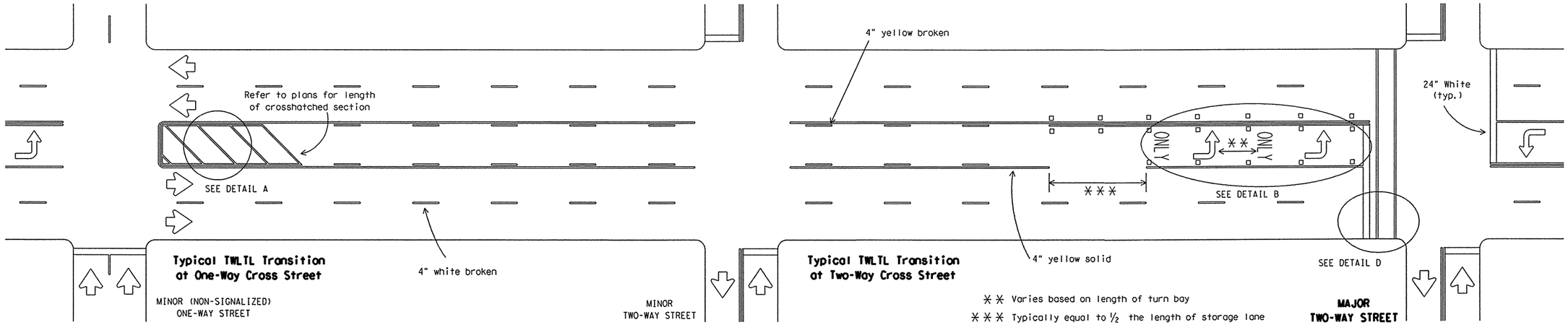

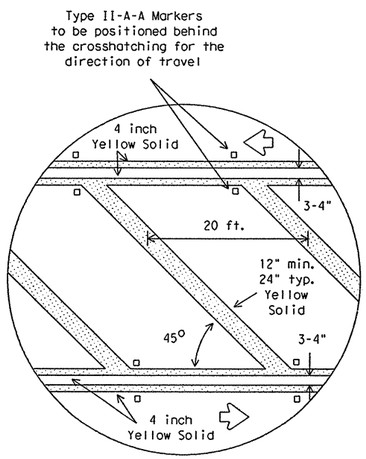

DETAIL A

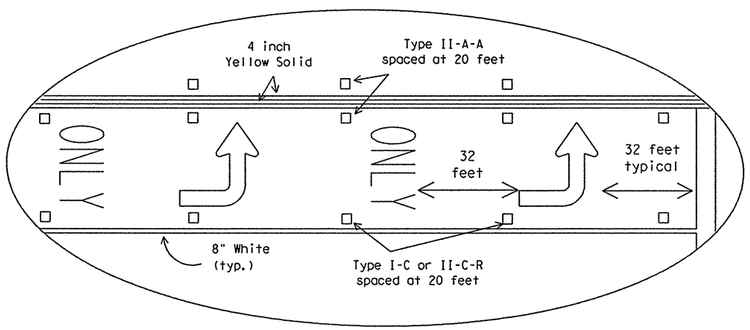

DETAIL B

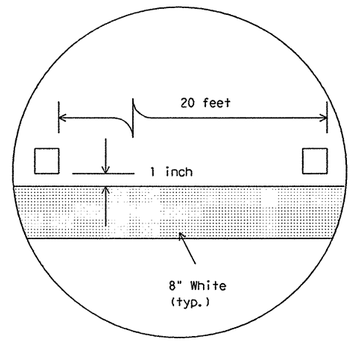

DETAIL C

Raised pavement marker Type I-C with undivided highways, flush medians and two way left turn lanes. Raised pavement marker Type II-C-R with divided highways and raised medians.

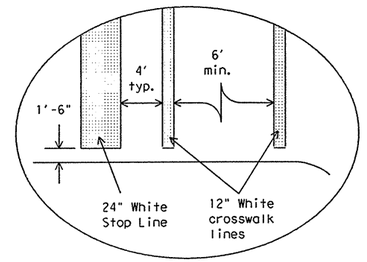

DETAIL D

Final placement of Stop Bar and Crosswalk shall be approved by the Engineer in the field.

GENERAL NOTES

Refer elsewhere in plans for additional RPM placement and details.

Details for words and arrows as shown on other sheets.

All pavement marking materials shall meet the required Departmental Material Specifications as specified by the plans.

For a left turn bay, two sets of words and arrows shall be used if the length of the bay is equal to or greater than 180 feet. The bottom of the first ONLY shall be placed at the beginning of the turn bay lane line as shown above.

Other crosswalk paterns as shown in the "Texas Manual on Uniform Traffic Control Devices" may be used.

SPECIFICATION REFERENCE TABLE

MATERIAL SPECIFICATIONS	
PAVEMENT MARKERS (REFLECT.)	DMS-4200
EPOXY	DMS-6100
BITUMINOUS ADHESIVE FOR PAVE. MKS.	DMS-6130

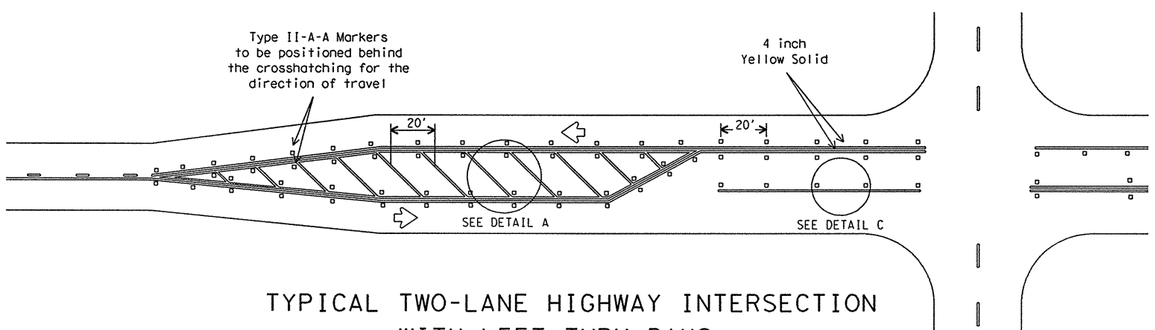

TYPICAL TWO-LANE HIGHWAY INTERSECTION WITH LEFT TURN BAYS

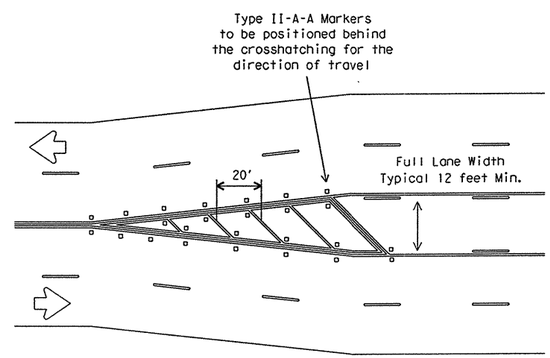

TYPICAL TRANSITION FOR TWLTL AND DIVIDED HIGHWAY

Texas Department of Transportation
Traffic Operations Division

PAVEMENT MARKINGS FOR TWO-WAY LEFT TURN LANES DIVIDED HIGHWAYS AND RURAL LEFT TURN BAYS

PM(4)-10

© TxDOT April 1998

REVISIONS	DN: TXDOT	CK: TXDOT	DW: TXDOT	CK: TXDOT
5-00	CONT	SECT	JOB	HIGHWAY
8-00	0683	06	027	LP 1/SH 45
3-03	DIST		COUNTY	SHEET NO.
2-10	AUS		WILLIAMSON	678

22D

DATE:
FILE:

DISCLAIMER
The use of this standard is governed by the "Texas Engineering Practice Act". No warranty of any kind is made by TxDOT for any purpose whatsoever. TxDOT assumes no responsibility for the conversion of this standard to other formats or for incorrect results or damages resulting from its use.

	1	2	3	4	5	6	7	8	9	10	11	12	13	14	15	16
SPLAYED																
ACC:	17	18	19	20	21	22	23	24	25	26	27	28	29	30	31	32
	33	34	35	36	37	38	39	40	41	42	43	44	45	46	47	48
	49	50	51	52	53	54	55	56	57	58	59	60	61	62	63	

STANDARD PLANS
Texas Department of Transportation
Traffic Operations Division

STANDARD PAVEMENT MARKINGS (WORDS)

PM(5)-01

© TxDOT March 2001	DN: -	CK: - GRB	DW: - FDN	CK: - CAL
REVISIONS	STATE DISTRICT	FEDERAL REGION	FEDERAL AID PROJECT	SHEET
	AUSTIN	6		679
	COUNTY		CONTROL-SECT-JOB	HIGHWAY
	WILLIAMSON		0683-06-027	SH 45 LOOP 1

226

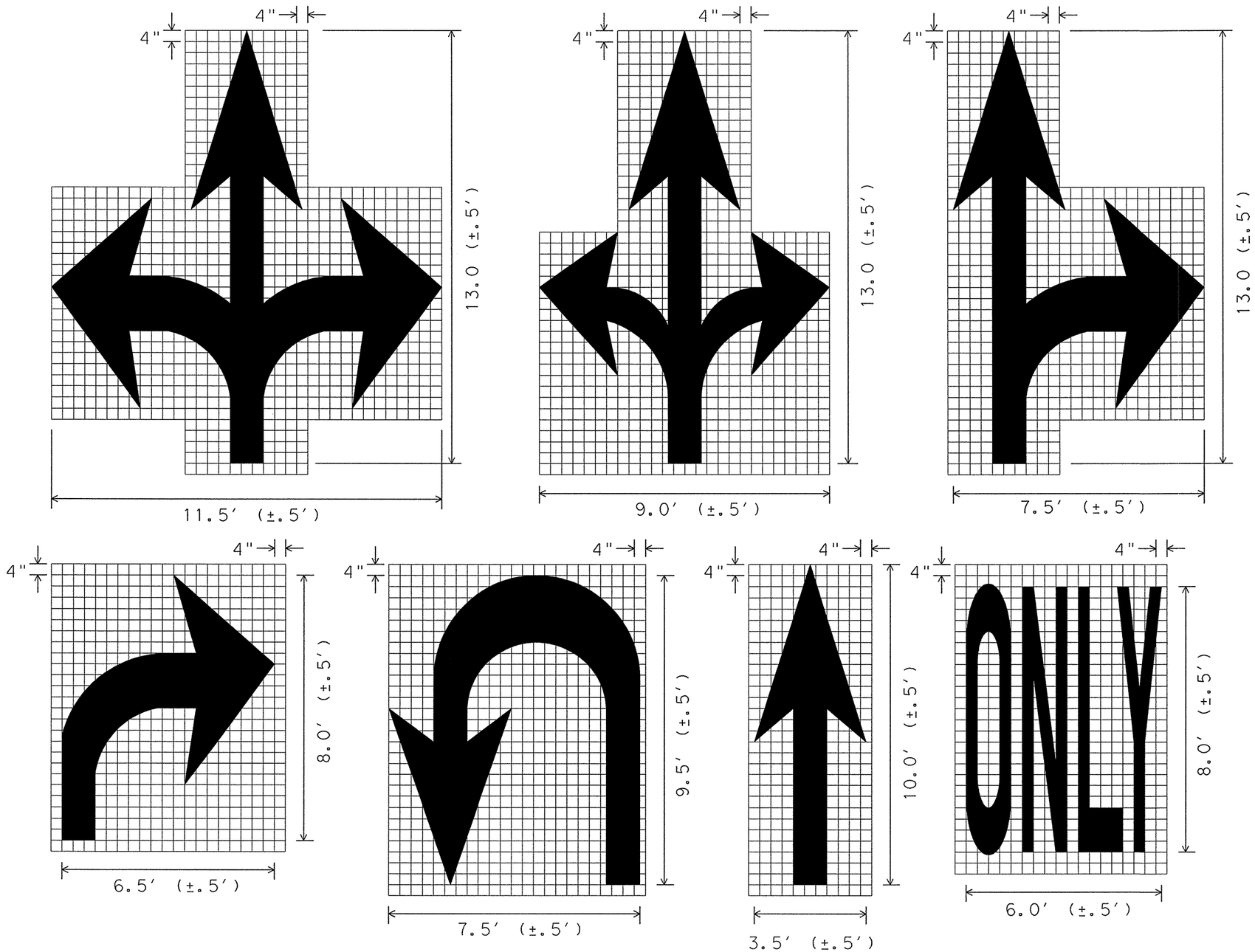

GENERAL NOTES;

1. Minimum 8 foot white markings should be used, unless otherwise noted. If message consists of more than one word, it should be placed with first word nearest the driver.
2. These details are standard size for normal installation; sizes may be reduced approximately one-third for low speed urban conditions; larger sizes may be needed for freeways, above average speed conditions or other critical locations.
3. The longitudinal space between markings should be at least four times the height of the markings, on low speed roads, but should not exceed ten times the height under any condition.
4. Markings considered appropriate for use when warranted include the following:
   A. Regulatory
      STOP
      RIGHT (LEFT) TURN ONLY
      25 MPH
      SYMBOL ARROWS
   B. Warning
      STOP AHEAD
      SIGNAL AHEAD
      SCHOOL
      SCHOOL X-ING
      PED X-ING
      R X R (see RCPM standard)
   C. Guide
      US XXX
      ROUTE XXX
      STATE XXX
      Other words or symbols may be necessary under certain conditions
5. Uncontrolled use of pavement markings can result in driver confusion. Word and symbol markings should be no more than three lines.
6. The word "STOP" shall not be used on the pavement unless accompanied by a Stop line and Stop sign. The word "STOP" shall not be placed on the pavement in advance to a stop line, unless every vehicle is required to stop at all times.
7. Pavement markings should generally be no more than one lane in width, with School messages being the exception. For details of School and School crossing pavement markings, refer to Part VII of the "Texas Manual on Uniform Traffic Control Devices".
8. Spacing between letters should be approximately 4 inches. The width of letters may vary depending on the width of the travel lanes.
9. Lane-Use arrow markings may be used to convey either guidance or mandatory messages. Arrows used to convey a mandatory movement must be accompanied by standard signs and the pavement marking word "ONLY".
10. Pavement markings are to be located as specified elsewhere in the plans.

SPACING BETWEEN LINES OF PAVEMENT MARKINGS	
MPH	SPACING
≤45	MINIMUM 4 TIMES THE LETTER HEIGHT
>45	MINIMUM - 4 TIMES THE LETTER HEIGHT MAXIMUM - 10 TIMES THE LETTER HEIGHT

STANDARD PLANS
Texas Department of Transportation
Traffic Operations Division

STANDARD PAVEMENT MARKINGS (ARROWS)

PM(6)-01

©TxDOT March 2001	DN:-	CK:- GRB	DW:- FDN	CK:- CAL
REVISIONS	STATE DISTRICT	FEDERAL REGION	FEDERAL AID PROJECT	SHEET
	AUSTIN	6		680
	COUNTY		CONTROL-SECT-JOB	HIGHWAY
	WILLIAMSON		0683-06-027	SH 45 LOOP 1

22H

DISCLAIMER
The use of this standard is governed by the "Texas Engineering Practice Act". No warranty of any kind is made by TxDOT for any purpose whatsoever. TxDOT assumes no responsibility for the conversion of this standard to other formats or for incorrect results or damages resulting from its use.

ACC:
SPLAYED
L:

DISCLAIMER: The use of this standard is governed by the "Texas Engineering Practice Act". No warranty of any kind is made by TxDOT for any purpose whatsoever. TxDOT assumes no responsibility for the conversion of this standard to other formats or for incorrect results or damages resulting from its use.

TRAFFIC LANE LINES PAVEMENT MARKING DETAILS

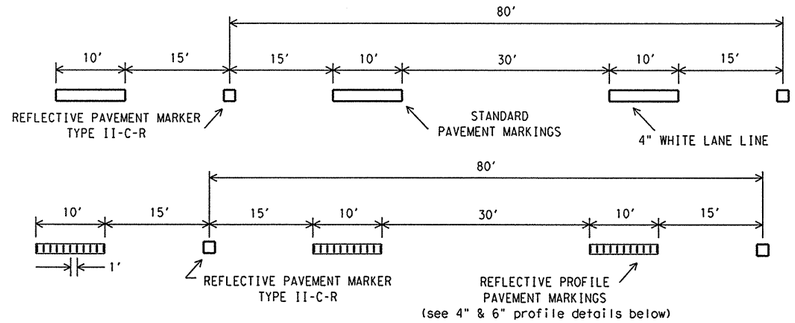

PAVEMENT MARKERS (REFL) TYPE II-C-R SHALL BE SPACED ON 80' CENTERS WITH THE CLEAR FACE TOWARD NORMAL TRAFFIC AND THE RED FACE TOWARD WRONG WAY TRAFFIC.

EDGELINE PAVEMENT MARKINGS

EDGELINES SHOULD TYPICALLY BE 4" WIDE AND THE MATERIALS SHALL BE AS SPECIFIED IN THE PLANS. IF RAISED PROFILE PAVEMENT MARKINGS ARE USED SEE DETAILS BELOW.

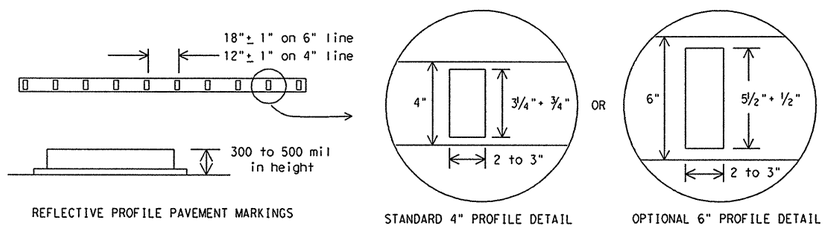

WRONG WAY ARROW DETAIL

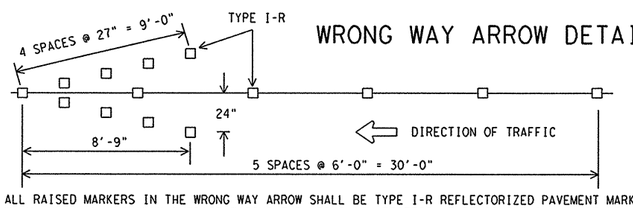

ALL RAISED MARKERS IN THE WRONG WAY ARROW SHALL BE TYPE I-R REFLECTORIZED PAVEMENT MARKERS WITH THE REFLECTORIZED SURFACE FACING THE WRONG WAY TRAFFIC. TYPE II-C-R SHALL NOT BE USED.

REFLECTORIZED WRONG WAY ARROWS, NOT TO EXCEED TWO, MAY BE PLACED ON EXIT RAMPS. LOCATION OF THE ARROWS SHALL BE AS SHOWN IN THE PLANS OR AS DIRECTED BY THE ENGINEER.

PARALLEL ACCELERATION LANE

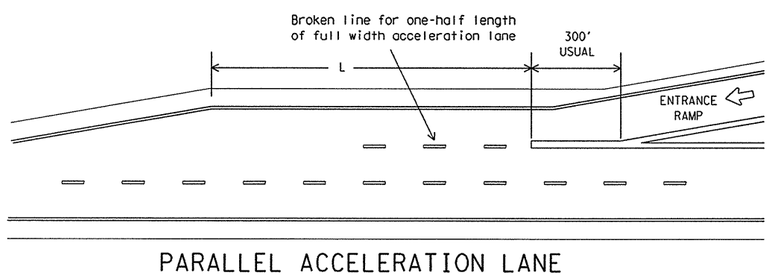

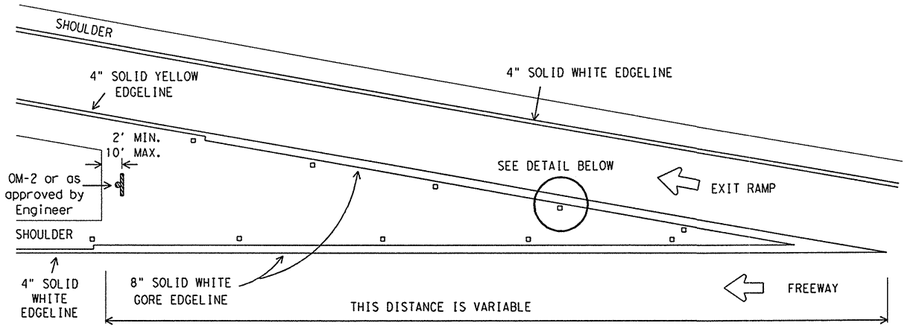

THE SHAPE OF THE GORE MARKING WILL VARY DEPENDING ON THE RAMP DESIGN AND WILL BE AS SHOWN IN THE PLANS OR AS DIRECTED BY THE ENGINEER. OM-2 OR SURFACE MOUNT OBJECT MARKER MOUNTING HEIGHT IS 36 INCHES.

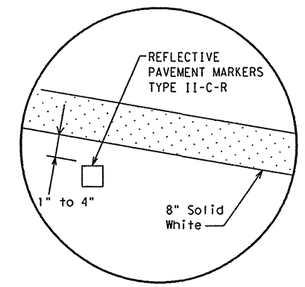

TYPICAL EXIT RAMP GORE MARKING

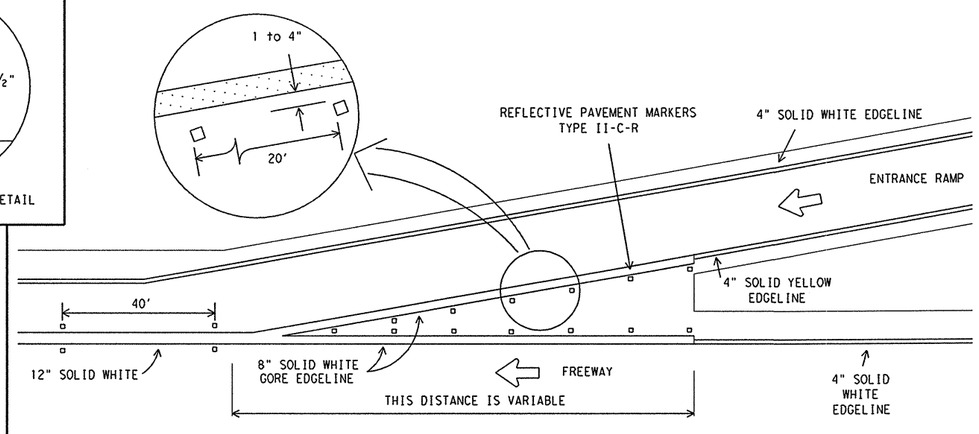

TYPICAL ENTRANCE RAMP GORE MARKING

RAISED PAVEMENT MARKERS

(REFLECTORIZED)

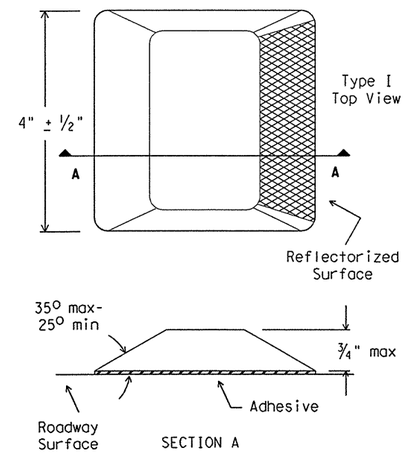

EXTEND THE EDGELINE FROM RAMP UNTIL IT INTERSECTS WITH EDGELINE FROM MAIN LANES

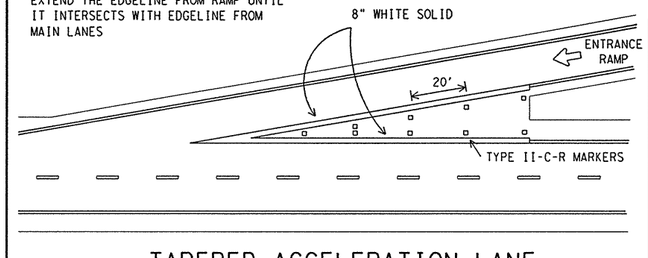

TAPERED ACCELERATION LANE

All pavement marking materials shall meet the required Departmental Material Specifications as specified by the plans.

SPECIFICATION REFERENCE TABLE

MATERIAL SPECIFICATIONS	
PAVEMENT MARKERS (REFLECT.)	DMS-4200
EPOXY	DMS-6100
BITUMINOUS ADHESIVE FOR PAVE. MKS.	DMS-6130

Texas Department of Transportation
Traffic Operations Division

TYPICAL STANDARD FREEWAY PAVEMENT MARKINGS WITH RAISED PAVEMENT MARKERS

FPM(1)-10

© TxDOT May 1974	DN: TXDOT	CK: TXDOT	DW: TXDOT	CK: TXDOT
REVISIONS	CONT	SECT	JOB	HIGHWAY
4-92 2-10	0683	06	027	LP 1/SH 45
5-00	DIST		COUNTY	SHEET NO.
8-00	AUS		WILLIAMSON	681
2-08				

DATE:
FILE:

234

DISCLAIMER: The use of this standard is governed by the "Texas Engineering Practice Act". No warranty of any kind is made by TxDOT for any purpose whatsoever. TxDOT assumes no responsibility for the conversion of this standard to other formats or for incorrect results or damages resulting from its use.

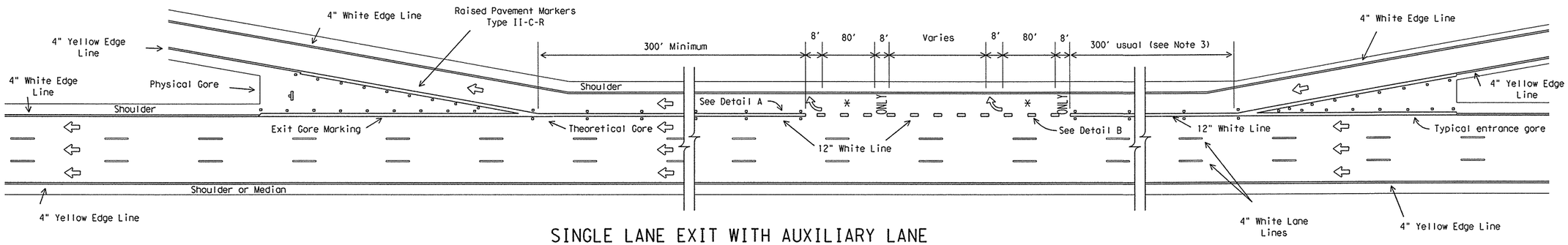

SINGLE LANE EXIT WITH AUXILIARY LANE

(See Note 5)

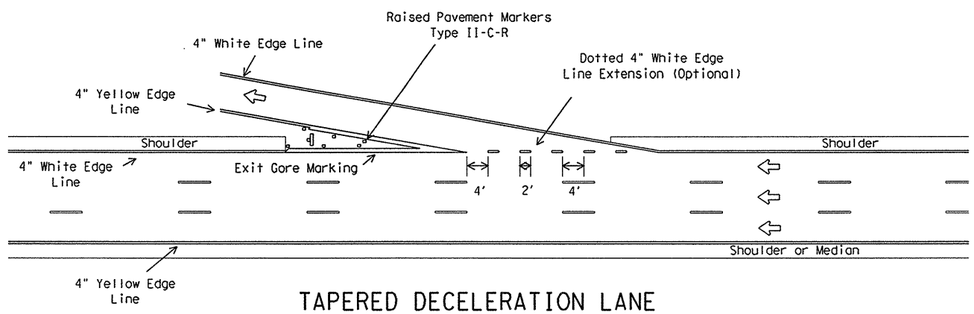

TAPERED DECELERATION LANE

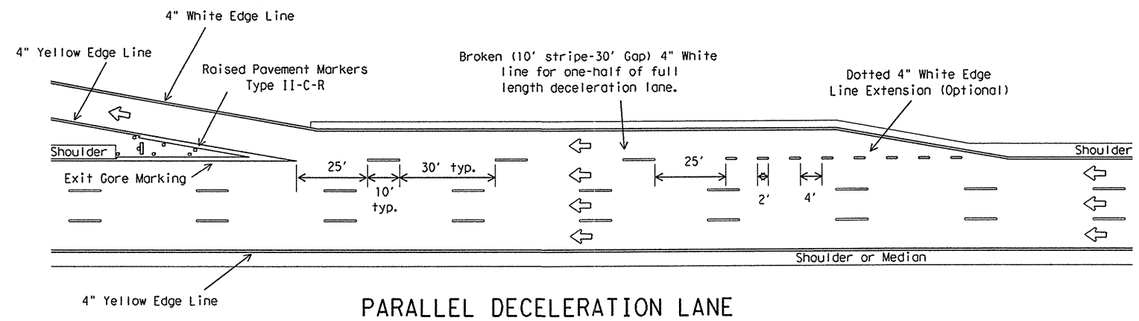

PARALLEL DECELERATION LANE

LEGEND

- OM-2, or approved surface mount object marker installed 2 to 10 feet from Physical Gore. Mounting height is approximately 36 inches.
- Denotes direction of traffic.
- Pavement marking arrows (white).
- Arrow markings are optional, however "ONLY" is required if arrow is used.

GENERAL NOTES:

1. Pavement markings shall be white except as otherwise noted.
2. Length of 12" white line may vary depending on location.
3. Lane drop markings are to be used to separate lanes that are required to go in different directions.
4. A lane drop (EXIT ONLY) condition is typically when the nearest entrance ramp is greater than 2000 feet upstream of the exit ramp, measured from theoretical gore of entrance ramp to theoretical gore of exit ramp.
5. All pavement marking materials shall meet the required Departmental Material Specifications as specified by the plans.

SPECIFICATION REFERENCE TABLE

MATERIAL SPECIFICATIONS	
PAVEMENT MARKERS (REFLECT.)	DMS-4200
EPOXY	DMS-6100
BITUMINOUS ADHESIVE FOR PAVE. MKS.	DMS-6130

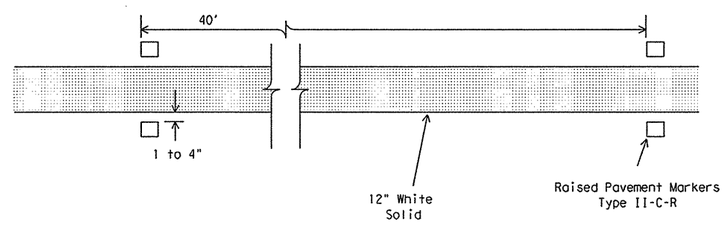

DETAIL A

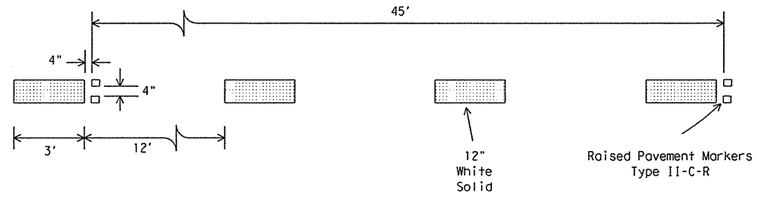

DETAIL B

Texas Department of Transportation
Traffic Operations Division

TYPICAL STANDARD FREEWAY PAVEMENT MARKINGS ENTRANCE AND EXIT RAMPS

FPM(2)-10

©TxDOT February 1977

DN: TXDOT	CK: TXDOT	DW: TXDOT	CK: TXDOT

REVISIONS	CONT	SECT	JOB	HIGHWAY
4-92 2-10	0683	06	027	LP 1/SH 45
8-95	DIST		COUNTY	SHEET NO.
5-00	AUS		WILLIAMSON	682
8-00				
23B				

DATE:
FILE:

DISCLAIMER: The use of this standard is governed by the "Texas Engineering Practice Act". No warranty of any kind is made by TxDOT for any purpose whatsoever. TxDOT assumes no responsibility for the conversion of this standard to other formats or for incorrect results or damages resulting from its use.

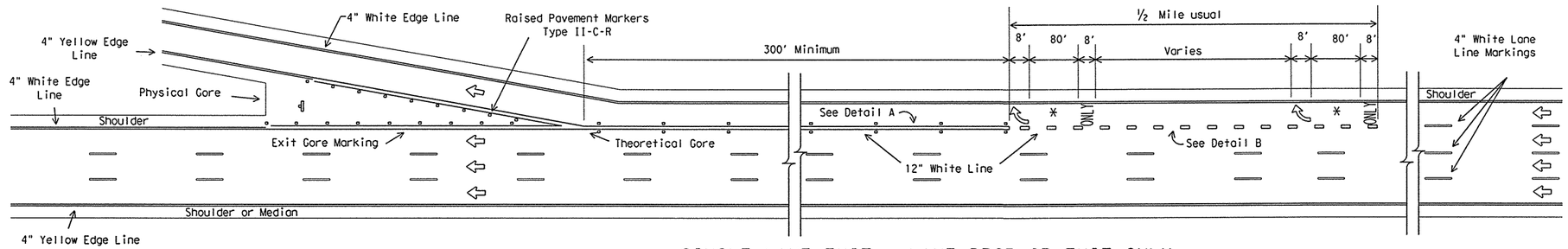

SINGLE LANE EXIT - LANE DROP OR EXIT ONLY

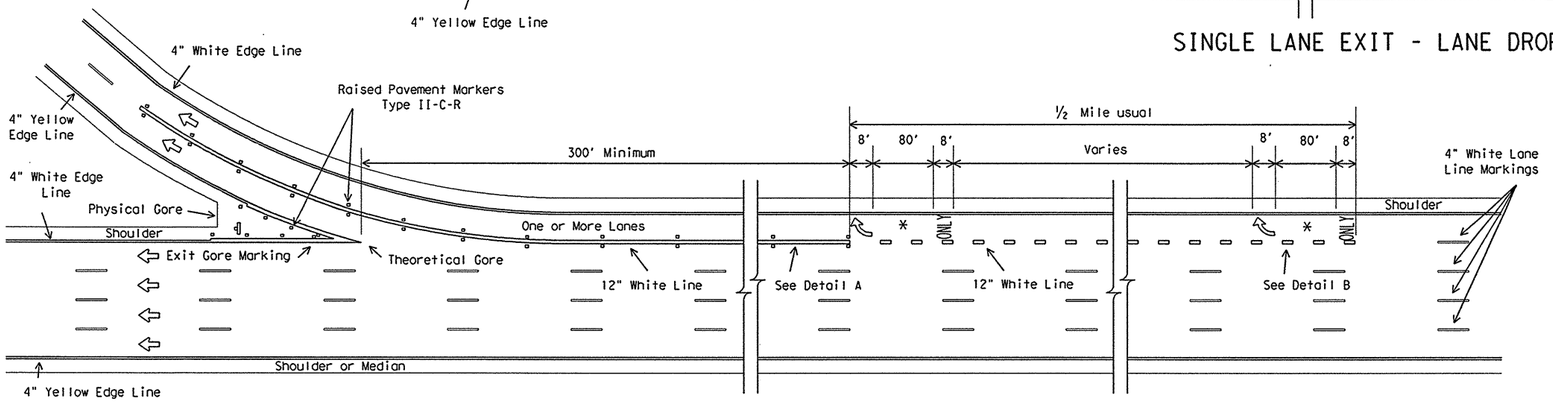

MULTIPLE LANE EXIT - EXIT ONLY WITH OPTION LANE

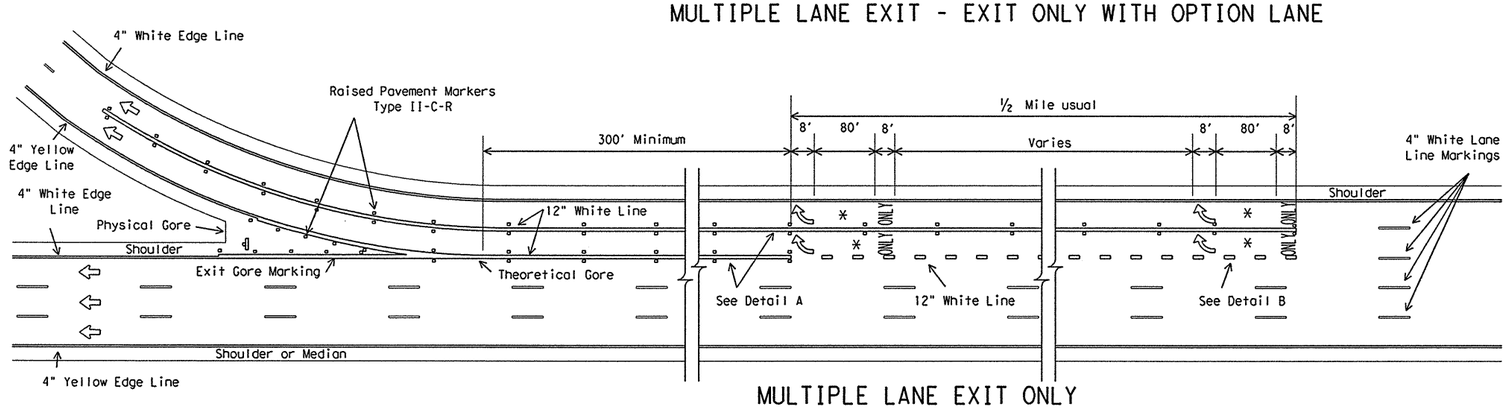

MULTIPLE LANE EXIT ONLY

LEGEND

- OM-2, or approved surface mount object marker installed 2 to 10 feet from Physical Gore. Mounting height is approximately 36 inches.
- Denotes direction of traffic.
- Pavement marking arrows (white).
- Arrow markings are optional, however "ONLY" is required if arrow is used.

GENERAL NOTES:

1. Pavement markings shall be white except as otherwise noted.
2. Length of 12" white line may vary depending on location.
3. Lane drop markings are to be used to separate lanes that are required to go in different directions.
4. A lane drop (EXIT ONLY) condition is typically when the nearest entrance ramp is greater than 2000 feet upstream of the exit ramp, measured from theoretical gore of entrance ramp to theoretical gore of exit ramp.
5. All pavement marking materials shall meet the required Departmental Material Specifications as specified by the plans.

SPECIFICATION REFERENCE TABLE

MATERIAL SPECIFICATIONS	
PAVEMENT MARKERS (REFLECT.)	DMS-4200
EPOXY	DMS-6100
BITUMINOUS ADHESIVE FOR PAVE. MKS.	DMS-6130

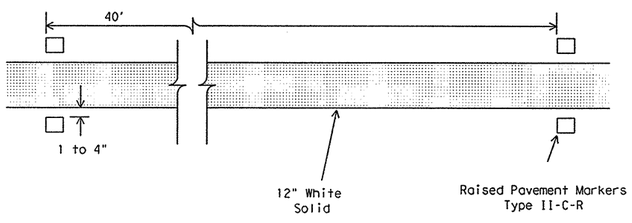

DETAIL A

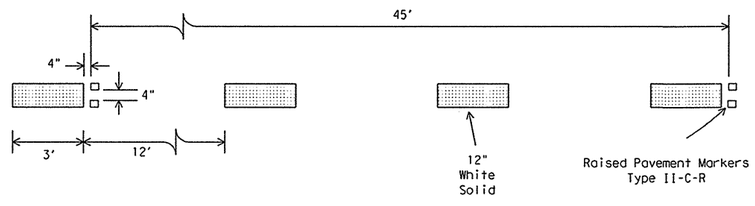

DETAIL B

Texas Department of Transportation
Traffic Operations Division

TYPICAL STANDARD FREEWAY PAVEMENT MARKINGS LANE DROP (EXIT ONLY) EXIT RAMPS

FPM(3)-10

© TxDOT April 1992

DN: TXDOT	CK: TXDOT	DW: TXDOT	CK: TXDOT

REVISIONS
5-00
8-00
2-10

CONT	SECT	JOB	HIGHWAY
0683	06	027	LP 1/SH 45

DIST	COUNTY	SHEET NO.
AUS	WILLIAMSON	683

DATE:
FILE:

230

DISCLAIMER: The use of this standard is governed by the "Texas Engineering Practice Act". No warranty of any kind is made by TxDOT for any purpose whatsoever. TxDOT assumes no responsibility for the conversion of this standard to other formats or for incorrect results or damages resulting from its use.

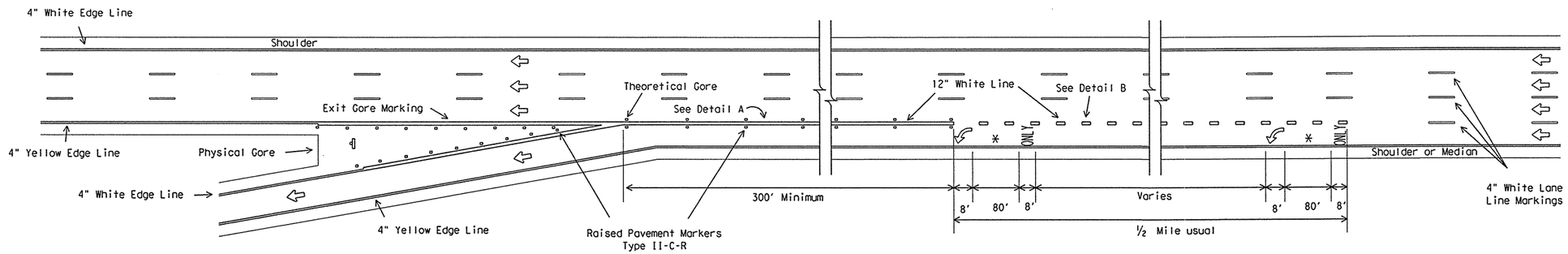

SINGLE LANE EXIT - LANE DROP OR EXIT ONLY (LEFTHAND)

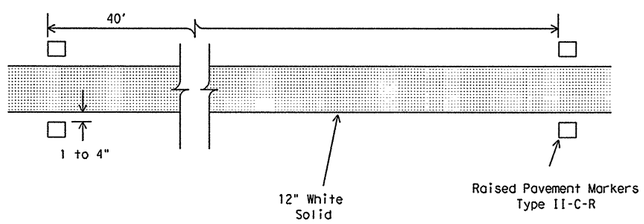

DETAIL A

LEGEND

- OM-2, or approved surface mount object marker installed 2 to 10 feet from Physical Gore. Mounting height is approximately 36 inches.
- Denotes direction of traffic.
- Pavement marking arrows (white).
- Arrow markings are optional, however "ONLY" is required if arrow is used.

GENERAL NOTES:

1. Pavement markings shall be white except as otherwise noted.
2. Length of 12" white line may vary depending on location.
3. Lane drop markings are to be used to separate lanes that are required to go in different directions.
4. A lane drop (EXIT ONLY) condition is typically when the nearest entrance ramp is greater than 2000 feet upstream of the exit ramp, measured from theoretical gore of entrance ramp to theoretical gore of exit ramp.
5. All pavement marking materials shall meet the required Departmental Material Specifications as specified by the plans.

SPECIFICATION REFERENCE TABLE

MATERIAL SPECIFICATIONS	
PAVEMENT MARKERS (REFLECT.)	DMS-4200
EPOXY	DMS-6100
BITUMINOUS ADHESIVE FOR PAVE. MKS.	DMS-6130

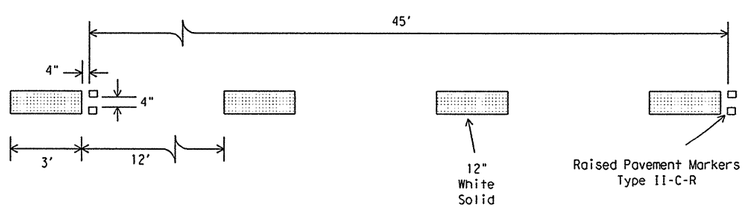

DETAIL B

Texas Department of Transportation
Traffic Operations Division

TYPICAL STANDARD FREEWAY PAVEMENT MARKINGS LANE DROP (EXIT ONLY) DETAILS

FPM(4)-10

© TxDOT April 1992

REVISIONS	DN: TXDOT	CK: TXDOT	DW: TXDOT	CK: TXDOT
5-00	CONT	SECT	JOB	HIGHWAY
8-00	0683	06	027	LP 1/SH 45
2-10	DIST	COUNTY		SHEET NO.
	AUS	WILLIAMSON		684

DATE:
FILE:

230 |

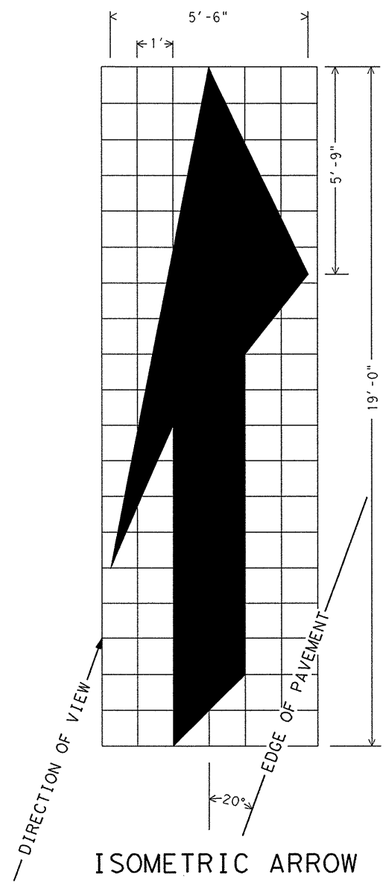

ISOMETRIC ARROW

12 INCH GRID
AREA = 42 SQ. FT.
RIGHT LANE DROP ARROW
(FOR LEFT LANE, USE MIRROR IMAGE)

STATE OF TEXAS
RENE U. GARZA
65409
REGISTERED PROFESSIONAL ENGINEER

Rene U Garza PE
4/11/11

REV. No.	DATE	REVISION	BY
△			
△			
△			

PBSJ
an Atkins company TBPE REG. # F-474

Texas Department of Transportation
Austin District
©2011 by TxDOT

SH 45 / O'CONNOR DRIVE ISOMETRIC ARROW DETAIL

SCALE: 1/4" = 1'

SHEET 1 OF 1

DESIGNED: CRM	FED. RD DIV. No.	STATE	PROJECT No.			HIGHWAY No.	
CHECKED: RWB	6	TEXAS				LP 1/SH 45	
DRAWN: CRM	STATE DISTRICT	COUNTY	CONTROL No.	SECTION No.	JOB No.	SHEET No.	
CHECKED: RWB	AUSTIN	WILLIAMSON	0683	06	027	685	

DATE: 4/11/2011 TIME: 11:02:43 AM
PLOT DRIVER: RD*11x17*PDF.plt
PEN TABLE: plotordr*ocon.tbl
FILE: r:\trans-design\o'connor\cadd\STD\PMRK*SIGNS\31*STDN31.DGN

SITE DESCRIPTION

NOTES: THE SITE DESCRIPTION IFORMATION IS PROVIDED ON VARIOUS SHEETS, EACH SHOWING SEPARATE DETAILS. THIS SWPPP INDEX POINTS THE USER TO THE APPROPRIATE LOCATION WHERE THE INFORMATION REQUIRED BY THE TPDES CONSTRUCTION GENERAL PERMIT CAN BE FOUND.
OF WAY SHALL ALSO BE THE LIMITS OF COVERAGE OF THE SW3P. Extending on SH45 from

PROJECT LIMITS: EXTENDING ON SH45 FROM McNEIL DR WEST JUST PAST O'CONNOR DR, IN WILLIAMSON COUNTY, TEXAS. THE PROJECT LIMITS SHOWN ON THE TITLE SHEET AND LIMITS OF RIGHT OF WAY SHALL ALSO BE THE LIMITS OF COVERAGE OF THE SW3P.

Nature of Activity: CONSTRUCTION OF O'CONNOR RD, SH45 FRONTAGE ROADS, RAMPS, WQ POND, STORM DRAINS, ASPHALTIC CONCRETE PAVEMENT, BRIDGES, RETAINING WALLS, AND RELATED GRADING, STAGING AND STOCKPILING ACTIVITIES.

MAJOR SOIL DISTURBING ACTIVITIES: WILL INCLUDE PREPARING THE RIGHT OF WAY, GRADING, EXCAVATION AND EMBANKMENT FOR THE ROADWAY, BEST MANAGEMENT PRACTICES FOR WATER QUALITY AND TOPSOIL WORK FOR FINAL PLANTING AND SEEDING. CONSTRUCTION WILL ALSO INCLUDE DITCH GRADING AND RE-VEGETATION.

INDUSTRIAL ACTIVITY OTHER THAN CONSTRUCTION: NONE

OWNER INFORMATION: Gerald Pohlmeyer
2727 S. Austin Ave.
Georgetown, TX 78626
512-225-1346

NARRATIVE - SEQUENCE OF CONSTRUCTION (STORM WATER MANAGEMENT) ACTIVITIES:
THE ORDER OF ACTIVITIES WILL BE AS FOLLOWS:

1. INSTALL TEMPORARY EROSION CONTROLS, PREPARE R.O.W., BEGIN EXCAVATION AND EMBANKMENT
2. EXCAVATE AND ROUGH GRADE WATER QUALITY POND.
3. INSTALL ALL CROSS CULVERTS. GRADE & SHAPE DITCHES. APPLY CHANNEL LINERS. SPRAY, SEED AND WATER CHANNELS. INSTALL STORM SEWERS.
4. FLUSH OUT PIPES ONCE CONSTRUCTION IS COMPLETE.
5. COMPLETE WQ POND CONSTRUCTION
6. WHEN ALL CONSTRUCTION ACTIVITY IS COMPLETE AND THE SITE IS STABLE AND APPROVED BY THE DISTRICT CONSTRUCTION ENGINEER, REMOVE ALL TEMPORARY CONTROLS AND RE-SEED ANY AREAS DISTURBED BY THEIR REMOVAL.

TOTAL PROJECT AREA: 80.70 ACRES

TOTAL AREA TO BE DISTURBED: 58.10 ACRES

EXISTING CONDITION OF SOIL & VEGETATIVE COVER AND % OF EXISTING VEGETATIVE COVER: EXISTING SOILS INCLUDE CRAWFORD CLAY (CFB), ECKRANT EXTREMELY STONY CLAY (EEB), AND GEORGETOWN STONY CLAY LOAM (GSB). THESE SOILS ARE WELL DRAINED AND EROSION POTENTIAL RANGES FROM SLIGHT TO MEDIUM. EXISTING VEGETATIVE COVER IS SPARSE.

NAME OF RECEIVING WATERS: RATTAN CREEK TO LAKE CREEK (SEGMENT 1244B)

CONTROLS

SOIL STABILIZATION PRACTICES:

- T TEMPORARY SEEDING
- P PERMANENT PLANTING, SODDING, OR SEEDING
- MULCHING
- P SOIL RETENTION BLANKET
- BUFFER ZONES
- P PRESERVATION OF NATURAL RESOURCES

OTHER: DISTURBED AREAS ON WHICH CONSTRUCTION ACTIVITIES HAVE CEASED (TEMPORARILY OR PERMANENTLY) SHALL BE STABILIZED WITHIN 14 DAYS UNLESS ACTIVITIES ARE SCHEDULED TO RESUME WITHIN 21 DAYS.

STRUCTURAL PRACTICES:

- T SILT FENCES
- HAY BALES
- T ROCK BERMS
- DIVERSION, INTERCEPTOR, OR PERIMETER DIKES
- DIVERSION, INTERCEPTOR, OR PERIMETER SWALES
- PIPE SLOPE DRAINS
- PAVED FLUMES
- T ROCK BEDDING AT CONSTRUCTION EXIT
- TIMBER MATTING AT CONSTRUCTION EXIT
- P CHANNEL LINERS
- SEDIMENT TRAPS
- P SEDIMENT BASINS
- T STORM INLET SEDIMENT TRAPS
- P STONE OUTLET STRUCTURES
- P CURBS AND GUTTERS
- P STORM SEWERS
- P VELOCITY CONTROL DEVICES

OTHER: SAND FILTRATION PONDS AND TEC LOGS

WASTE MATERIALS:

WASTE MATERIALS: ALL WASTE MATERIALS WILL BE COLLECTED AND STORED OR DISPOSED OF IN A LEGAL AND PROPER MANNER. NO CONSTRUCTION WASTE MATERIAL WILL BE BURIED ON SITE.

HAZARDOUS WASTE:

HAZARDOUS MATERIALS (INCLUDING SPILL REPORTING): AT A MINIMUM ANY PRODUCTS IN THE FOLLOWING CATEGORIES ARE CONSIDERED TO BE HAZARDOUS: PAINT, ACIDS FOR SOIL MASONRY SURFACES, CLEANING SOLVENTS, ASPHALT PRODUCTS, CHEMICAL ADDITIVES FOR SOIL STABILIZATION OR CONCRETE CURING COMPOUNDS AND ADDITIVES. IN THE EVENT OF A SPILL WHICH MAY BE HAZARDOUS, THE TCEQ SPILL COORDINATOR SHOULD BE CONTACTED IMMEDIATELY: 512-239-2507 OR 1-800-832-8224

SANITARY WASTE:

SANITARY WASTE: ALL SANITARY WASTE WILL BE COLLECTED FROM THE PORTABLE UNITS AS NECESSARY OR AS REQUIRED BY LOCAL REGULATION BY A LICENSED SANITARY WASTE MANAGEMENT CONTRACTOR.

STORM WATER MANAGEMENT:

STORM WATER MANAGEMENT: STORM WATER WILL BE CONTROLLED BY STORM DRAINS AND DITCHES. THIS SYSTEM WILL CARRY DRAINAGE FROM THE R.O.W. TO THE RECEIVING WATERS. EXISTING WATER QUALITY PONDS TO BE CLEANED AND MAINTIANED BY CONTRACTOR

OFF SITE VEHICLE TRACKING:

- X HAUL ROAD DAMPENED FOR DUST CONTROL
- X LOADED TRUCKS TO BE COVERED WITH TARPAULIN
- X EXCESS DIRT ON ROAD REMOVED DAILY
- X STABILIZED CONSTRUCTION ENTRANCE

OTHER:

INSPECTIONS

INSPECTION: ALL INSPECTIONS WILL BE PERFORMED BY CONSTRUCTION OBSERVER EVERY 2 WEEKS AS WELL AS AFTER HALF INCH OR MORE OF RAIN (AS RECORDED ON A NON-FREEZING RAIN GAUGE TO BE LOCATED AT THE PROJECT SITE). AN INSPECTION AND MAINTENANCE REPORT WILL BE MADE PER EACH INSPECTION. BASED ON THE INSPECTION RESULTS, THE CONTROLS SHALL BE REVISED AS NEEDED.

NON-STORM WATER DISCHARGE

POLLUTANT SOURCE OTHER THAN CONSTRUCTION: NONE

REMARKS: DISPOSAL AREAS, STOCKPILES AND HAUL ROADS BE CONSTRUCTED IN A MANNER THAT WILL MINIMIZE AND CONTROL THE AMOUNT OF SEDIMENT THAT MAY ENTER RECEIVING WATERS. THESE CONSTRUCTION ACTIVITIES SHALL NOT BE LOCATED IN ANY WETLAND, WATER BODY OR STREAM BED.

CONSTRUCTION STAGING AREAS AND VEHICLE MAINTENANCE AREAS SHALL BE CONSTRUCTED BY THE CONTRACTOR IN A MANNER TO MINIMIZE THE RUNOFF OF POLLUTANTS.

ALL WATERWAYS SHALL BE CLEARED AS SOON AS PRACTICABLE OF TEMPORARY SOILS, TEMPORARY BRIDGES, MATTING, FALSE WORK, PILING, DEBRIS OR OTHER OBSTRUCTIONS PLACED DURING CONSTRUCTION OPERATIONS.

MAINTENANCE

MAINTENANCE: ALL EROSION AND SEDIMENT CONTROLS INCLUDING EXISTING WQ PONDS WILL BE MAINTAINED IN GOOD WORKING ORDER. IF A REPAIR IS NECESSARY, IT WILL BE DONE AT THE EARLIEST DATE POSSIBLE, BUT NO LATER THAN 7 CALENDAR DAYS AFTER THE SURROUNDING EXPOSED GROUND HAS DRIED SUFFICIENTLY TO PREVENT FURTHER DAMAGE FROM HEAVY EQUIPMENT. THE AREAS ADJACENT TO CREEKS AND DRAINAGE WAYS SHALL HAVE PRIORITY.

STATE OF TEXAS
DAVID M. HARRIS
94995
LICENSED PROFESSIONAL ENGINEER

David Harris
4/11/11

REV. No.	DATE	REVISION	BY
△			
△			
△			

PBSJ
an Atkins company
TBPE REG. # F-474

Texas Department of Transportation
Austin District
©2011 by TxDOT

SH 45 / O'CONNOR DRIVE
SW3P INDEX

DESIGNED: AB	FED. RD DIV. No.	STATE	PROJECT No.			HIGHWAY No.	
CHECKED: AB	6	TEXAS				LP 1/SH 45	
DRAWN: KJK	STATE DISTRICT	COUNTY	CONTROL No.	SECTION No.	JOB No.	SHEET No.	
CHECKED: JSK	AUSTIN	WILLIAMSON	0683	06	027	686	

DATE: 4/11/2011 TIME: 9:51:23 AM
PLOT DRIVER: RD*11x17*PDF.plt
PEN TABLE: plotordr*ocon.tbl
FILE: r:\Trans-Design\o'connor\cadd\drn\OC45sw3p01.dgn

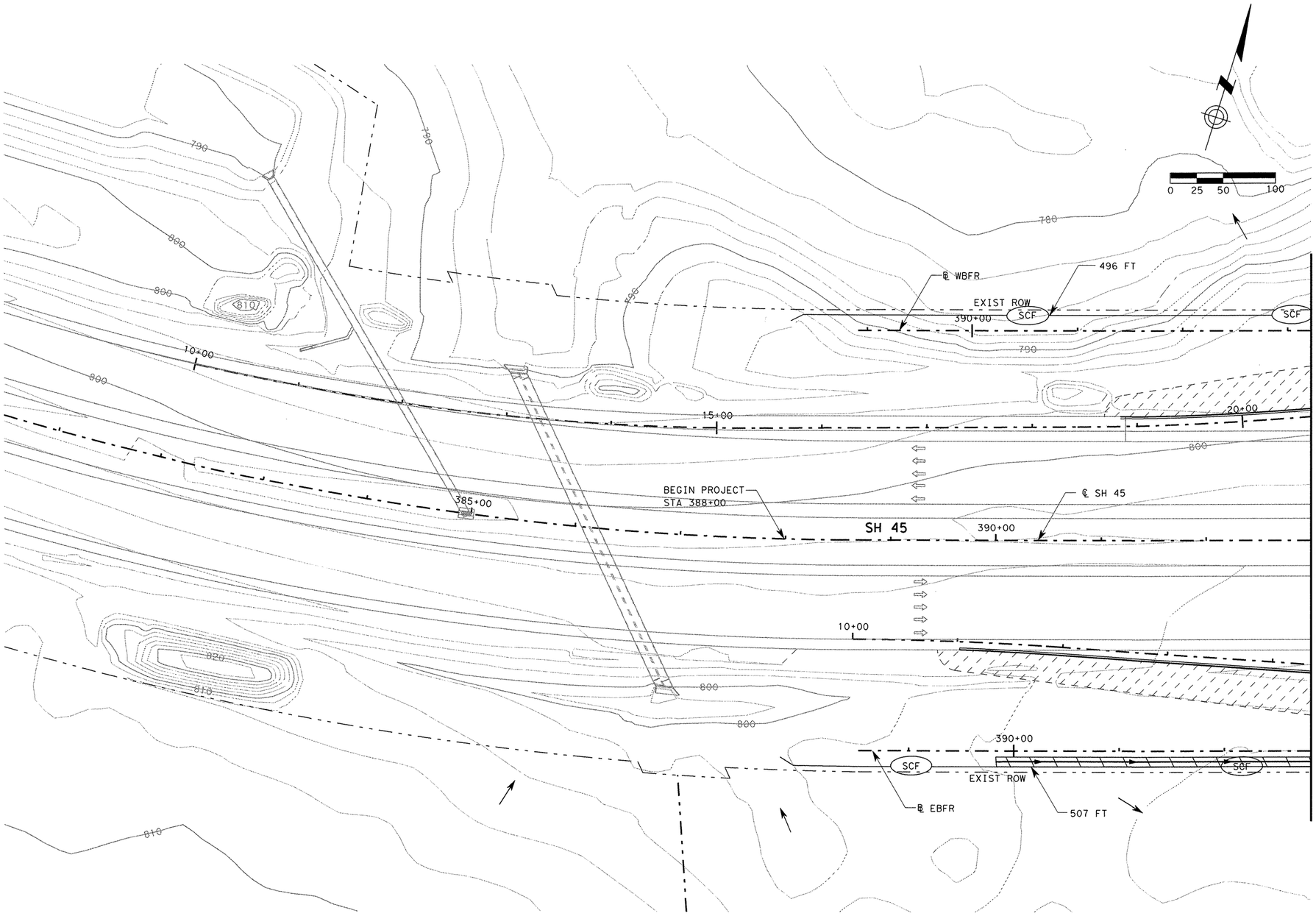

NOTES:

1. REMOVAL OF SILT WITHIN DITCHES SHALL BE PAID FOR UNDER ITEM 506 "BACKHOE WORK (EROSION & SEDIMENTATION CONTROL)"
2. ALL INLETS WILL BE PROTECTED BY SEDIMENT CONTROL DEVICES
3. SEE TYPICAL SECTIONS FOR LIMITS OF PERMANENT SEEDING AREAS.

LEGEND

- SCF — TEMP. SEDMNT. CONT. FENCE
- RFD2 — ROCK FILTER DAM (TYPE 2)
- TECL — TEMP. EROSION CONT. LOG
- FLOW DIRECTION
- TEMP & PERM SEEDING (3)
- ST-CI — SEDIMENT TRAP CURB INLET
- ST-DI — SEDIMENT TRAP DROP INLET
- SOIL RETENTION BLANKET (CL 2) (TY F)

STATE OF TEXAS
DAVID M. HARRIS
94995
LICENSED
PROFESSIONAL ENGINEER

David Harris
4/11/11

REV. No.	DATE	REVISION	BY
△			
△			
△			

PBSJ
an Atkins company
TBPE REG. # F-474

Texas Department of Transportation
Austin District
©2011 by TxDOT

SH 45 / O'CONNOR DRIVE
EROSION CONTROL
SH 45
STA. 388+00 TO 393+00

SCALE: 1"=100'
SHEET 1 OF 8

DESIGNED: AB	FED. RD DIV. No.	STATE	PROJECT No.			HIGHWAY No.	
CHECKED: AB	6	TEXAS				LP 1/SH 45	
DRAWN: KJK	STATE DISTRICT	COUNTY		CONTROL No.	SECTION No.	JOB No.	SHEET No.
CHECKED: JSK	AUSTIN	WILLIAMSON		0683	06	027	687

DATE: 4/11/2011 TIME: 9:51:25 AM
PLOT DRIVER: RD*11x17*PDF.plt
PEN TABLE: plotordr*ocon.tbl
FILE: r:\Trans-Design\o'connor\cadd\drn\OC45ec01.dgn

DATE: 4/11/2011 TIME: 9:51:27 AM

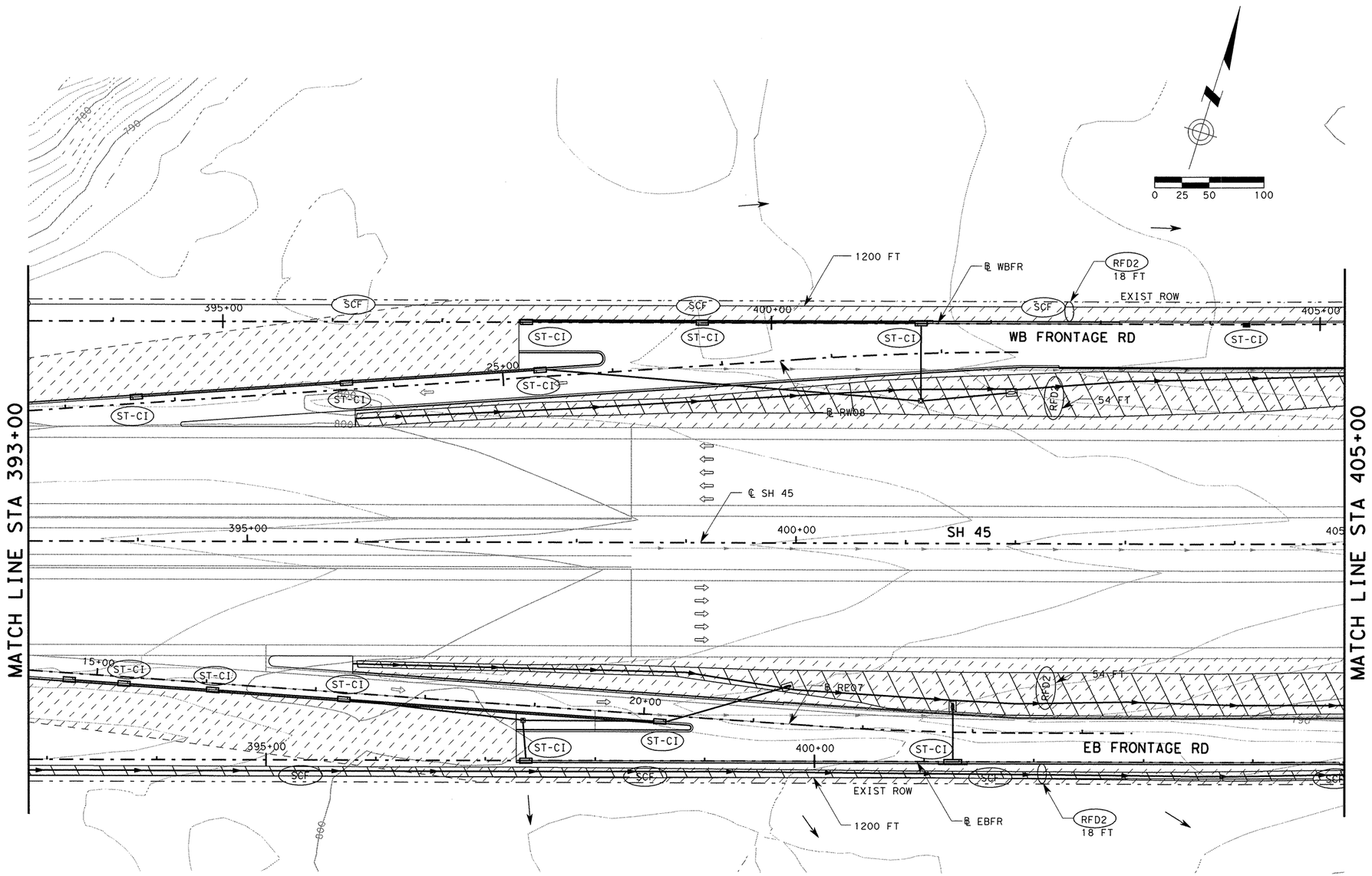

NOTES:

1. REMOVAL OF SILT WITHIN DITCHES SHALL BE PAID FOR UNDER ITEM 506 "BACKHOE WORK (EROSION & SEDIMENTATION CONTROL)"
2. ALL INLETS WILL BE PROTECTED BY SEDIMENT CONTROL DEVICES
3. SEE TYPICAL SECTIONS FOR LIMITS OF PERMANENT SEEDING AREAS.

LEGEND

SCF	TEMP. SEDMNT. CONT. FENCE
RFD2	ROCK FILTER DAM (TYPE 2)
TECL	TEMP. EROSION CONT. LOG
	FLOW DIRECTION
	TEMP & PERM SEEDING (3)
ST-CI	SEDIMENT TRAP CURB INLET
ST-DI	SEDIMENT TRAP DROP INLET
	SOIL RETENTION BLANKET (CL 2) (TY F)

STATE OF TEXAS
DAVID M. HARRIS
94995
LICENSED
PROFESSIONAL ENGINEER

David Harris
4/11/11

REV. No.	DATE	REVISION	BY
△			
△			
△			

PBSJ
an Atkins company
TBPE REG. # F-474

Texas Department of Transportation
Austin District
©2011 by TxDOT

SH 45 / O'CONNOR DRIVE
EROSION CONTROL
SH 45
STA 393+00 TO 405+00

SCALE: 1"=100'

SHEET 2 OF 8

DESIGNED: AB	FED. RD DIV. No.	STATE	PROJECT No.			HIGHWAY No.	
CHECKED: AB	6	TEXAS				LP 1/SH 45	
DRAWN: KJK	STATE DISTRICT	COUNTY	CONTROL No.	SECTION No.	JOB No.	SHEET No.	
CHECKED: JSK	AUSTIN	WILLIAMSON	0683	06	027	688	

PLOT DRIVER: RD*11x17*PDF.plt
PEN TABLE: plotord*ocon.tbl
FILE: r:\Trans-Design\o'connor\cadd\drn\OC45ec02.dgn

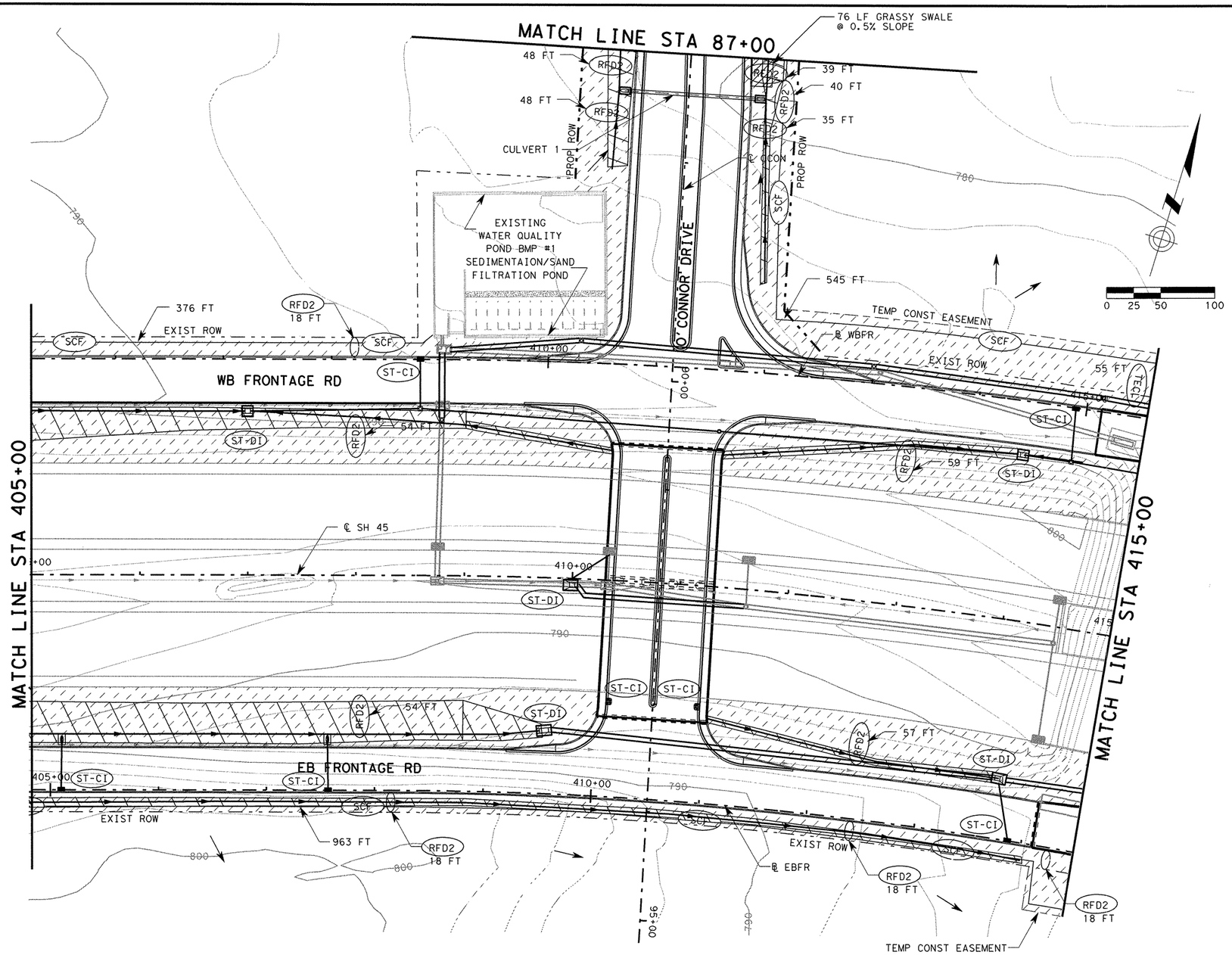

NOTES:

1. REMOVAL OF SILT WITHIN DITCHES SHALL BE PAID FOR UNDER ITEM 506 "BACKHOE WORK (EROSION & SEDIMENTATION CONTROL)"
2. ALL INLETS WILL BE PROTECTED BY SEDIMENT CONTROL DEVICES
3. SEE TYPICAL SECTIONS FOR LIMITS OF PERMANENT SEEDING AREAS.

LEGEND

- SCF — TEMP. SEDMNT. CONT. FENCE
- RFD2 — ROCK FILTER DAM (TYPE 2)
- TECL — TEMP. EROSION CONT. LOG
- FLOW DIRECTION
- TEMP & PERM SEEDING (3)
- ST-CI — SEDIMENT TRAP CURB INLET
- ST-DI — SEDIMENT TRAP DROP INLET
- SOIL RETENTION BLANKET (CL 2) (TY F)

STATE OF TEXAS
DAVID M. HARRIS
94995
LICENSED PROFESSIONAL ENGINEER
David Harris
4/11/11

REV. No.	DATE	REVISION	BY
△			
△			
△			

PBSJ
an Atkins company
TBPE REG. # F-474

Texas Department of Transportation
Austin District
©2011 by TxDOT

SH 45 / O'CONNOR DRIVE EROSION CONTROL SH 45 STA 405+00 TO 415+00

SCALE: 1"=100'

SHEET 3 OF 8

DESIGNED: AB	FED. RD DIV. No.	STATE	PROJECT No.			HIGHWAY No.
CHECKED: AB	6	TEXAS				LP 1/SH 45
DRAWN: KJK	STATE DISTRICT	COUNTY	CONTROL No.	SECTION No.	JOB No.	SHEET No.
CHECKED: JSK	AUSTIN	WILLIAMSON	0683	06	027	689

DATE: 4/11/2011 TIME: 9:51:28 AM
PLOT DRIVER: RD*11x17*PDF.plt
PEN TABLE: plotordr*ocon.tbl
FILE: r:\Trans-Design\o'connor\cadd\drn\OC45sec03.dgn

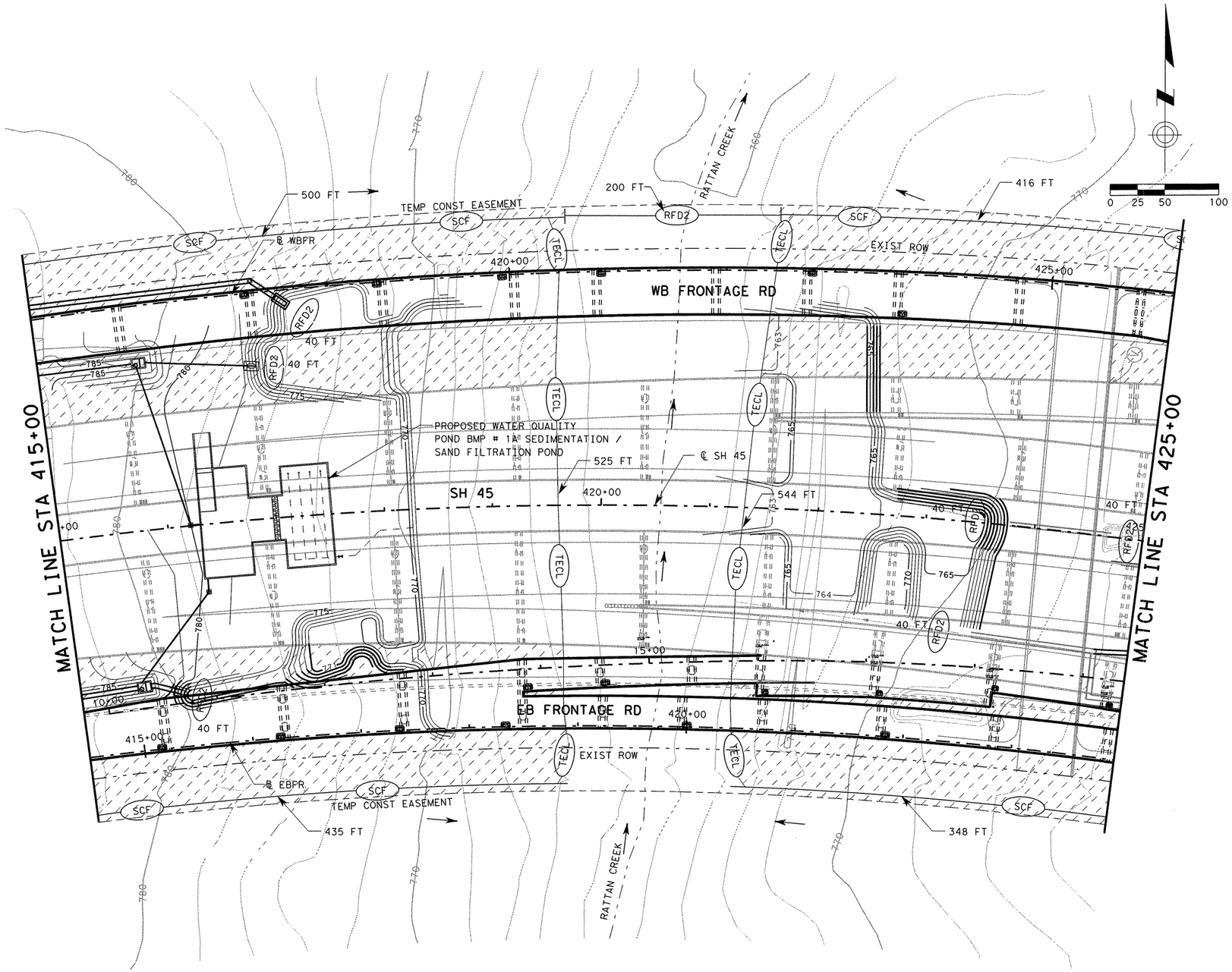

NOTES:

1. REMOVAL OF SILT WITHIN DITCHES SHALL BE PAID FOR UNDER ITEM 506 "BACKHOE WORK (EROSION & SEDIMENTATION CONTROL)"
2. ALL INLETS WILL BE PROTECTED BY SEDIMENT CONTROL DEVICES
3. SEE TYPICAL SECTIONS FOR LIMITS OF PERMANENT SEEDING AREAS.
4. LAKE INANDATION ZONE @ EL 770
5 SEE RATTAN CREEK RIPRAP LOCATION & CLASSIFICATION PLAN FOR PERMANENT EROSION CONTROL LOCATIONS.

LEGEND

- SCF — TEMP. SEDMNT. CONT. FENCE
- RFD2 — ROCK FILTER DAM (TYPE 2)
- TECL — TEMP. EROSION CONT. LOG
- FLOW DIRECTION
- TEMP & PERM SEEDING (3)
- ST-CI — SEDIMENT TRAP CURB INLET
- ST-DI — SEDIMENT TRAP DROP INLET
- SOIL RETENTION BLANKET (CL 2) (TY F)

STATE OF TEXAS
DAVID M. HARRIS
94995
LICENSED
PROFESSIONAL ENGINEER

David Harris
4/11/11

REV. No.	DATE	REVISION	BY
△			
△			
△			

PBSJ
an Atkins company
TBPE REG. # F-474

Texas Department of Transportation
Austin District
©2011 by TxDOT

SH 45 / O'CONNOR DRIVE EROSION CONTROL SH 45 STA 415+00 TO 425+00

SCALE: 1"=100'
SHEET 4 OF 8

DESIGNED: AB	FED. RD DIV. No.	STATE	PROJECT No.	HIGHWAY No.
CHECKED: AB	6	TEXAS		LP 1/SH 45

DRAWN: KJK	STATE DISTRICT	COUNTY	CONTROL No.	SECTION No.	JOB No.	SHEET No.
CHECKED: JSK	AUSTIN	WILLIAMSON	0683	06	027	690

DATE: 4/11/2011 TIME: 9:51:31 AM

PLOT DRIVER: RD*11x17*PDF.plt
PEN TABLE: plotordr*ocon.tbl
FILE: r:\Trans-Design\o'connor\cadd\drn\0C45ec04.dgn

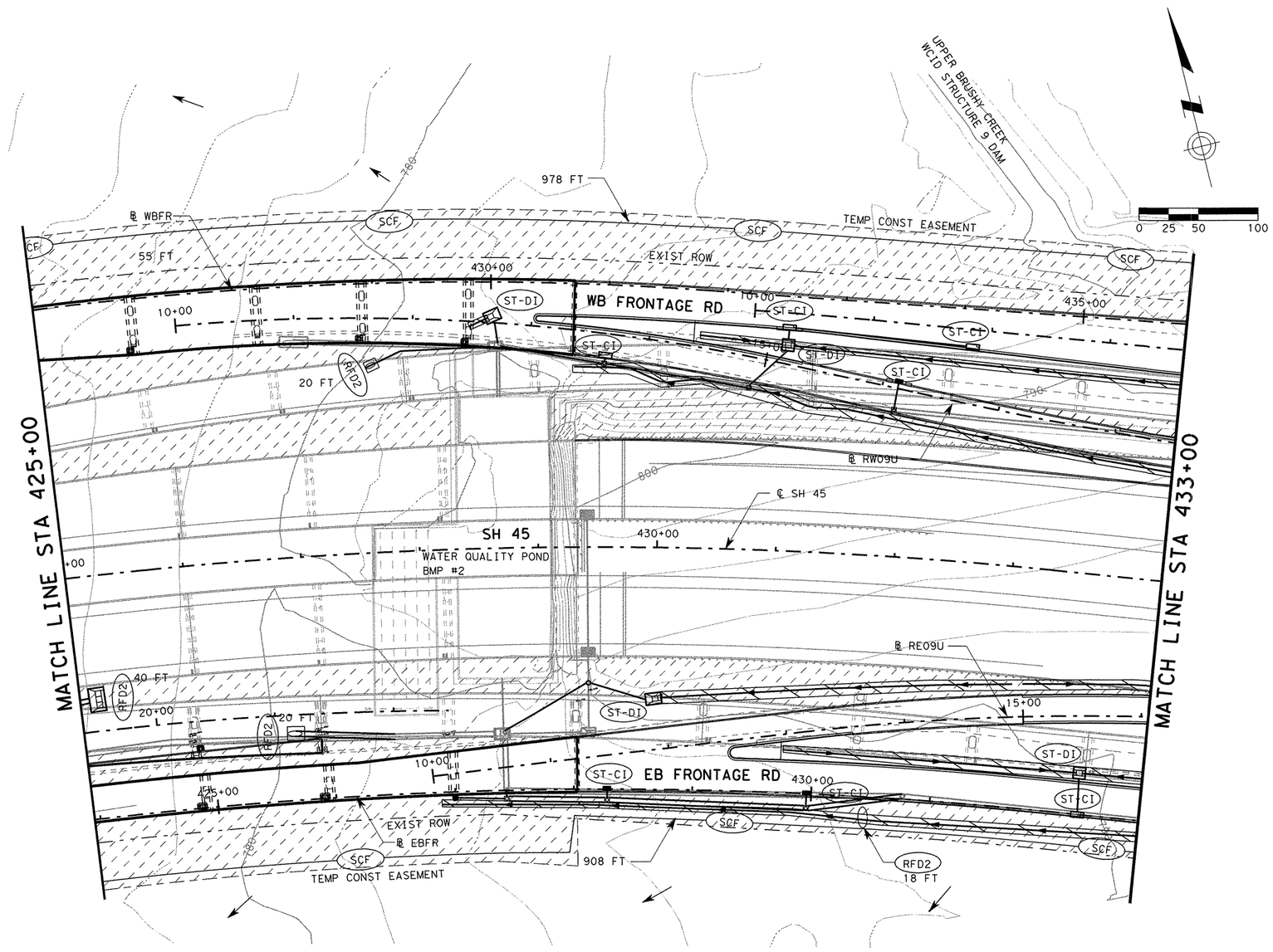

NOTES:

1. REMOVAL OF SILT WITHIN DITCHES SHALL BE PAID FOR UNDER ITEM 506 "BACKHOE WORK (EROSION & SEDIMENTATION CONTROL)"
2. ALL INLETS WILL BE PROTECTED BY SEDIMENT CONTROL DEVICES
3. SEE TYPICAL SECTIONS FOR LIMITS OF PERMANENT SEEDING AREAS.

LEGEND

- SCF — TEMP. SEDMNT. CONT. FENCE
- RFD2 — ROCK FILTER DAM (TYPE 2)
- TECL — TEMP. EROSION CONT. LOG
- FLOW DIRECTION
- TEMP & PERM SEEDING (3)
- ST-CI — SEDIMENT TRAP CURB INLET
- ST-DI — SEDIMENT TRAP DROP INLET
- SOIL RETENTION BLANKET (CL 2) (TY F)

STATE OF TEXAS
DAVID M. HARRIS
94995
LICENSED
PROFESSIONAL ENGINEER

David Harris
4/11/11

REV. No.	DATE	REVISION	BY
△			
△			
△			

PBSJ
an Atkins company
TBPE REG. # F-474

Texas Department of Transportation
Austin District
©2011 by TxDOT

SH 45 / O'CONNOR DRIVE EROSION CONTROL SH 45 STA 425+00 TO 433+00

SCALE: 1"=100'

SHEET 5 OF 8

DESIGNED: AB	FED. RD DIV. No.	STATE	PROJECT No.			HIGHWAY No.	
CHECKED: AB	6	TEXAS				LP 1/SH 45	
DRAWN: KJK	STATE DISTRICT	COUNTY	CONTROL No.	SECTION No.	JOB No.	SHEET No.	
CHECKED: JSK	AUSTIN	WILLIAMSON	0683	06	027	691	

DATE: 4/11/2011 TIME: 9:51:33 AM
PLOT DRIVER: RD*11x17*PDF.plt
PEN TABLE: plotordr*ocon.tbl
FILE: r:\Trans-Design\o'connor\oadd\drn\0C45ec05.dgn

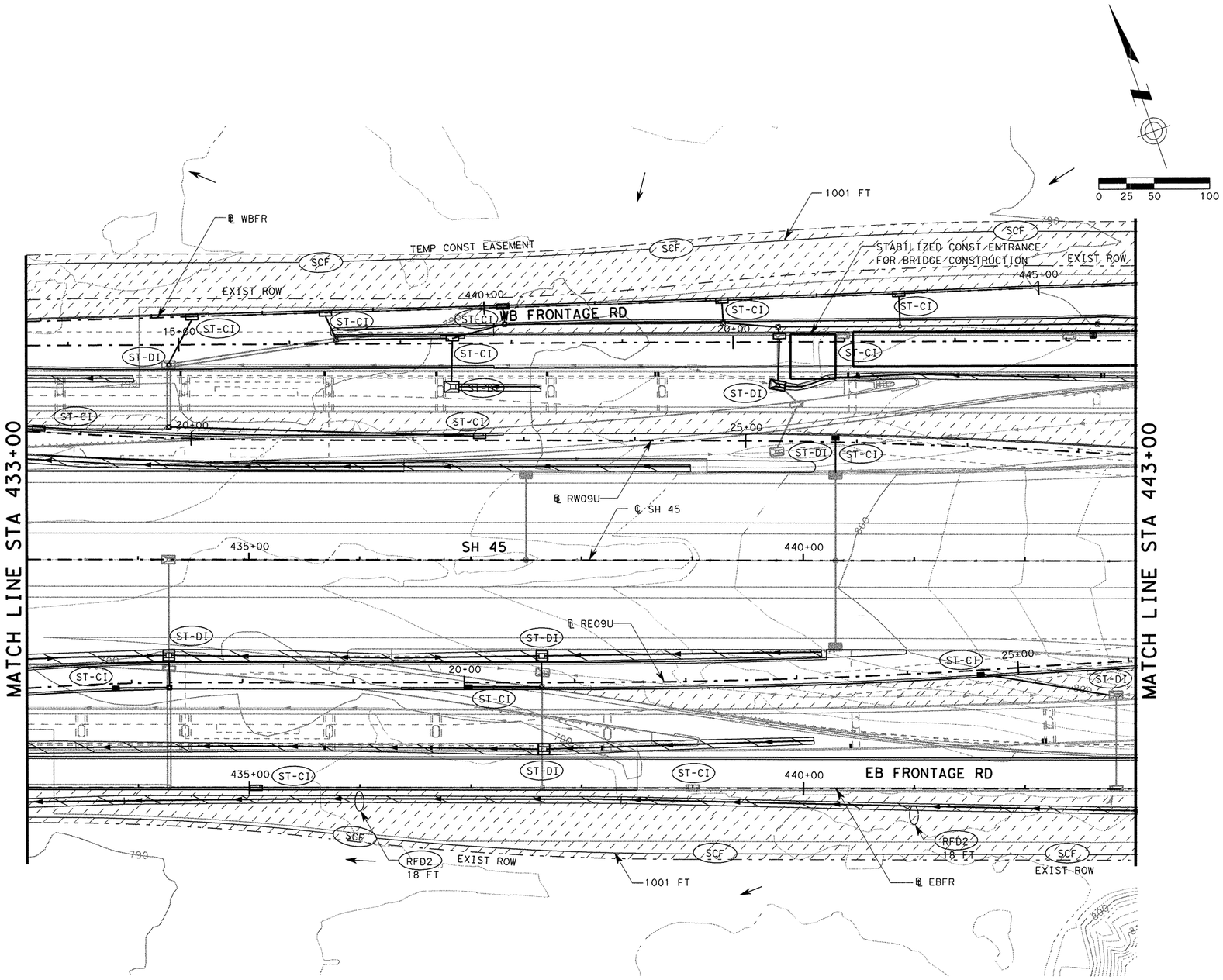

NOTES:

1. REMOVAL OF SILT WITHIN DITCHES SHALL BE PAID FOR UNDER ITEM 506 "BACKHOE WORK (EROSION & SEDIMENTATION CONTROL)"
2. ALL INLETS WILL BE PROTECTED BY SEDIMENT CONTROL DEVICES
3. SEE TYPICAL SECTIONS FOR LIMITS OF PERMANENT SEEDING AREAS.

LEGEND

SCF	TEMP. SEDMNT. CONT. FENCE
RFD2	ROCK FILTER DAM (TYPE 2)
TECL	TEMP. EROSION CONT. LOG
←	FLOW DIRECTION
	TEMP & PERM SEEDING (3)
ST-CI	SEDIMENT TRAP CURB INLET
ST-DI	SEDIMENT TRAP DROP INLET
	SOIL RETENTION BLANKET (CL 2) (TY F)

STATE OF TEXAS
DAVID M. HARRIS
94995
LICENSED PROFESSIONAL ENGINEER
David Harris 4/11/11

REV. No.	DATE	REVISION	BY
△			
△			
△			

PBSJ an Atkins company TBPE REG. # F-474

Texas Department of Transportation
Austin District
©2011 by TxDOT

SH 45 / O'CONNOR DRIVE EROSION CONTROL SH 45 STA 433+00 TO 443+00

SCALE: 1"=100' SHEET 6 OF 8

DESIGNED: AB	FED. RD DIV. No.	STATE	PROJECT No.			HIGHWAY No.	
CHECKED: AB	6	TEXAS				LP 1/SH 45	
DRAWN: KJK	STATE DISTRICT	COUNTY	CONTROL No.	SECTION No.	JOB No.	SHEET No.	
CHECKED: JSK	AUSTIN	WILLIAMSON	0683	06	027	692	

DATE: 4/11/2011 TIME: 9:51:36 AM
PLOT DRIVER: RD*11x17*PDF.plt
PEN TABLE: plotordr*ocon.tbl
FILE: r:\Trans-Design\o'connor\oadd\drn\0C45ec06.dgn

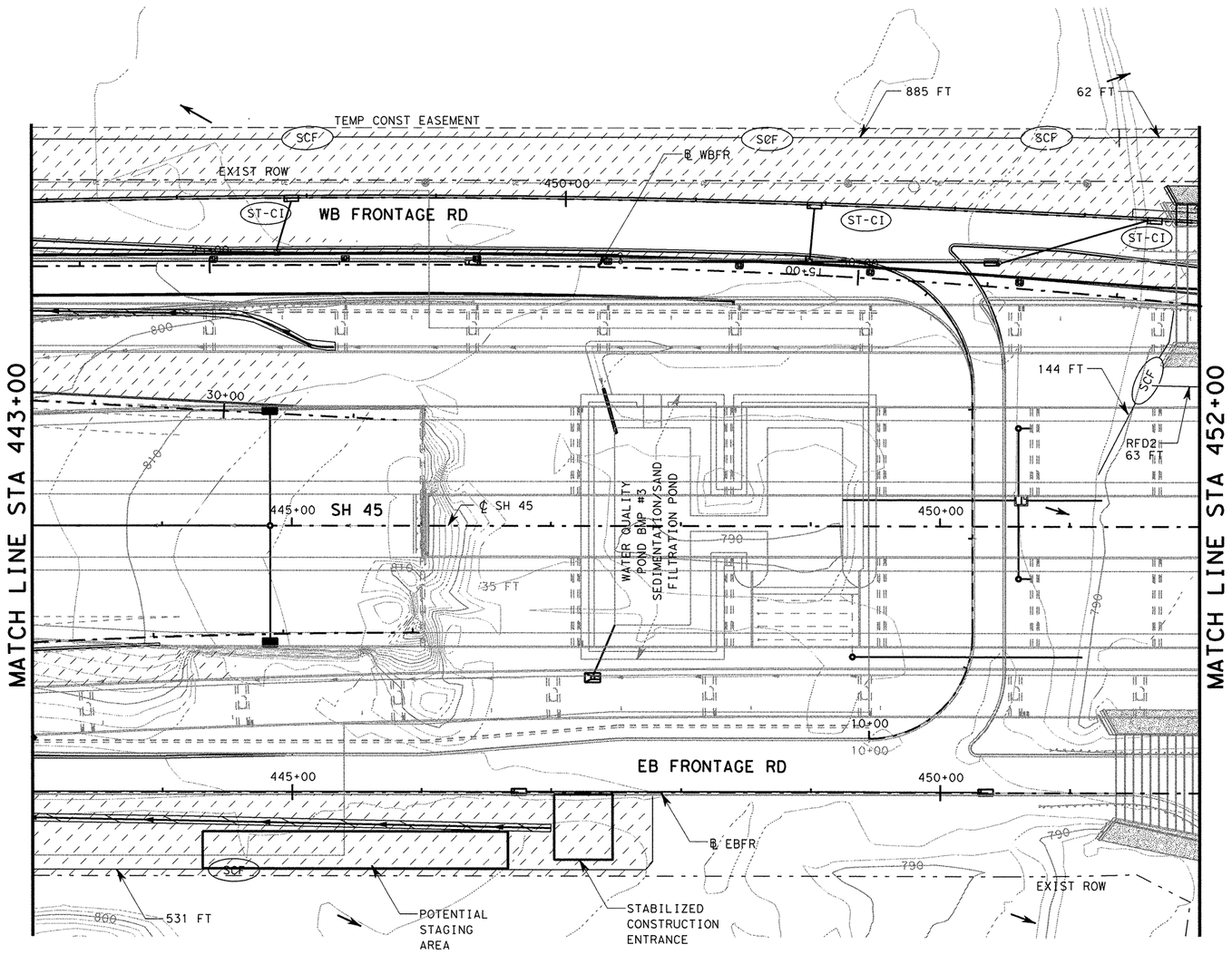

0 25 50 100

NOTES:

1. REMOVAL OF SILT WITHIN DITCHES SHALL BE PAID FOR UNDER ITEM 506 "BACKHOE WORK (EROSION & SEDIMENTATION CONTROL)"
2. ALL INLETS WILL BE PROTECTED BY SEDIMENT CONTROL DEVICES
3. CONTRACTOR TO INSTALL STABILIZED CONSTRUCTION ENTRANCE AND ADJUST LOCATION AS APPROVED.
4. SEE TYPICAL SECTIONS FOR LIMITS OF PERMANENT SEEDING AREAS.

LEGEND

SCF	TEMP. SEDMNT. CONT. FENCE
RFD2	ROCK FILTER DAM (TYPE 2)
TECL	TEMP. EROSION CONT. LOG
	FLOW DIRECTION
	TEMP & PERM SEEDING (3)
ST-CI	SEDIMENT TRAP CURB INLET
ST-DI	SEDIMENT TRAP DROP INLET
	SOIL RETENTION BLANKET (CL 2) (TY F)

STATE OF TEXAS
DAVID M. HARRIS
94995
LICENSED PROFESSIONAL ENGINEER

David Harris
4/11/11

REV. No.	DATE	REVISION	BY
△			
△			
△			

PBSJ
an Atkins company
TBPE REG. # F-474

Texas Department of Transportation
Austin District
©2011 by TxDOT

SH 45 / O'CONNOR DRIVE
EROSION CONTROL
SH 45
STA 443+00 TO 452+00

SCALE: 1"=100'

SHEET 7 OF 8

DESIGNED: AB	FED. RD DIV. No.	STATE	PROJECT No.			HIGHWAY No.	
CHECKED: AB	6	TEXAS				LP 1/SH 45	
DRAWN: KJK	STATE DISTRICT	COUNTY	CONTROL No.	SECTION No.	JOB No.	SHEET No.	
CHECKED: JSK	AUSTIN	WILLIAMSON	0683	06	027	693	

DATE: 4/11/2011 TIME: 9:51:37 AM
PLOT DRIVER: RD*11x17*PDF.plt
PEN TABLE: plotordr*ocon.tbl
FILE: r:\Trans-Design\o'connor\cadd\drn\0C45ec07.dgn

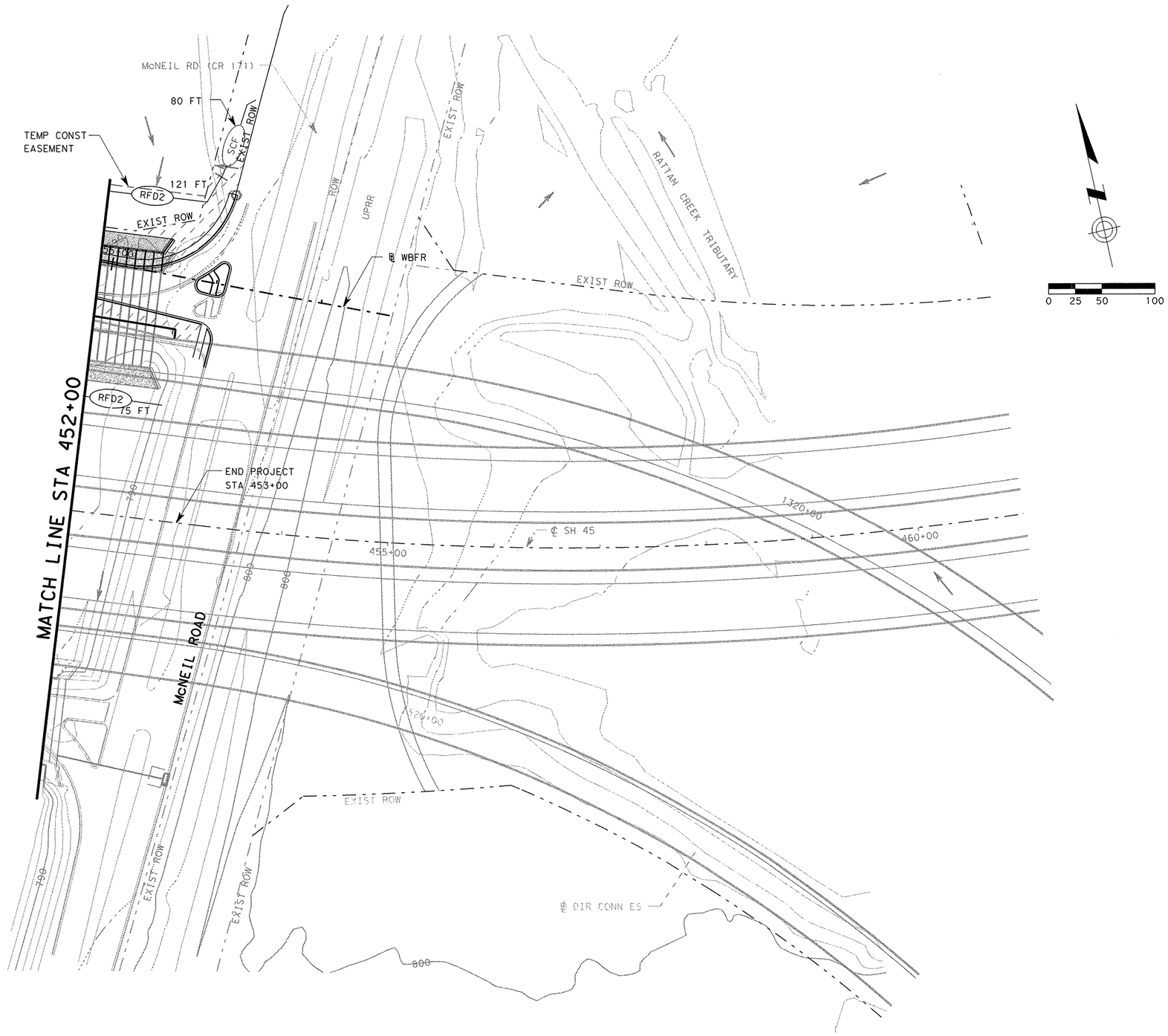

NOTES:

1. REMOVAL OF SILT WITHIN DITCHES SHALL BE PAID FOR UNDER ITEM 506 "BACKHOE WORK (EROSION & SEDIMENTATION CONTROL)"
2. ALL INLETS WILL BE PROTECTED BY SEDIMENT CONTROL DEVICES
3. CONTRACTOR SHALL PLACE A CONSTRUCTION EXIT ADJACENT TO CR 171 (McNEIL RD.) FOR CONSTRUCTION VEHICLES EXITING THE WORK ZONE ON BOTH SIDES OF CR 171.
4. SEE TYPICAL SECTIONS FOR LIMITS OF PERMANENT SEEDING AREAS.

LEGEND

- SCF — TEMP. SEDMNT. CONT. FENCE
- RFD2 — ROCK FILTER DAM (TYPE 2)
- TECL — TEMP. EROSION CONT. LOG
- FLOW DIRECTION
- TEMP & PERM SEEDING (3)
- ST-CI — SEDIMENT TRAP CURB INLET
- ST-DI — SEDIMENT TRAP DROP INLET
- SOIL RETENTION BLANKET (CL 2) (TY F)

STATE OF TEXAS
DAVID M. HARRIS
94995
LICENSED PROFESSIONAL ENGINEER
David Harris 4/11/11

REV. No.	DATE	REVISION	BY
△			
△			
△			

PBSJ an Atkins company TBPE REG. # F-474

Texas Department of Transportation
Austin District
©2011 by TxDOT

SH 45 / O'CONNOR DRIVE EROSION CONTROL SH 45 STA 452+00 TO 453+00

SCALE: 1"=100'

SHEET 8 OF 8

DESIGNED: AB	FED. RD DIV. No.	STATE	PROJECT No.			HIGHWAY No.	
CHECKED: AB	6	TEXAS				LP 1/SH 45	
DRAWN: KJK	STATE DISTRICT	COUNTY	CONTROL No.	SECTION No.	JOB No.	SHEET No.	
CHECKED: JSK	AUSTIN	WILLIAMSON	0683	06	027	694	

DATE: 4/11/2011 TIME: 9:51:40 AM
PLOT DRIVER: RD*11x17*PDF.plt
PEN TABLE: plotordr*ocon.tbl
FILE: r:\Trans-Design\o'connor\oadd\drn\0045ec08.dgn

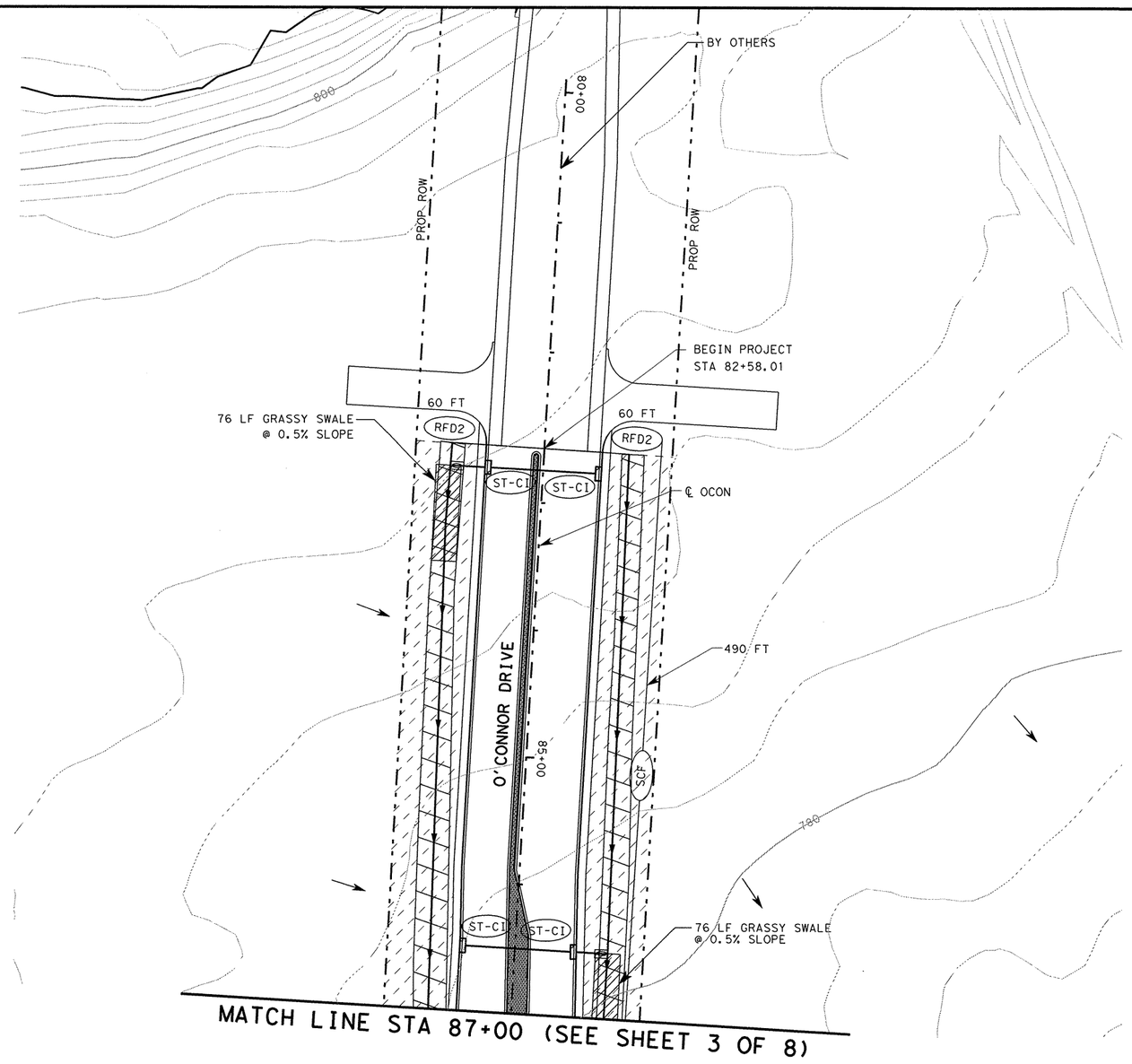

0 25 50 100

NOTES:

1. REMOVAL OF SILT WITHIN DITCHES SHALL BE PAID FOR UNDER ITEM 506 "BACKHOE WORK (EROSION & SEDIMENTATION CONTROL)"
2. ALL INLETS WILL BE PROTECTED BY SEDIMENT CONTROL DEVICES
3. SEE TYPICAL SECTIONS FOR LIMITS OF PERMANENT SEEDING AREAS.

LEGEND

- SCF — TEMP. SEDMNT. CONT. FENCE
- RFD2 — ROCK FILTER DAM (TYPE 2)
- TECL — TEMP. EROSION CONT. LOG
- FLOW DIRECTION
- TEMP & PERM SEEDING (3)
- ST-CI — SEDIMENT TRAP CURB INLET
- ST-DI — SEDIMENT TRAP DROP INLET
- SOIL RETENTION BLANKET (CL 2) (TY F)

STATE OF TEXAS
DAVID M. HARRIS
94995
LICENSED
PROFESSIONAL ENGINEER

David M. Harris
4/11/11

REV. No.	DATE	REVISION	BY
△			
△			
△			

PBSJ
an Atkins company
TBPE REG. # F-474

Texas Department of Transportation
Austin District
©2011 by TxDOT

SH 45 / O'CONNOR DRIVE
EROSION CONTROL
O'CONNOR DRIVE
STA 81+00 TO 87+00

SCALE: 1"=100'

SHEET 1 OF 1

DESIGNED: AB	FED. RD DIV. No.	STATE	PROJECT No.		HIGHWAY No.
CHECKED: AB	6	TEXAS			LP 1/SH 45

DRAWN: KJK	STATE DISTRICT	COUNTY	CONTROL No.	SECTION No.	JOB No.	SHEET No.
CHECKED: JSK	AUSTIN	WILLIAMSON	0683	06	027	695

DATE: 4/11/2011 TIME: 9:51:42 AM
PLOT DRIVER: RD*11x17*PDF.plt
PEN TABLE: plotordr*ocon.tbl
FILE: r:\Trans-Design\o'connor\cadd\drn\0645ec09.dgn

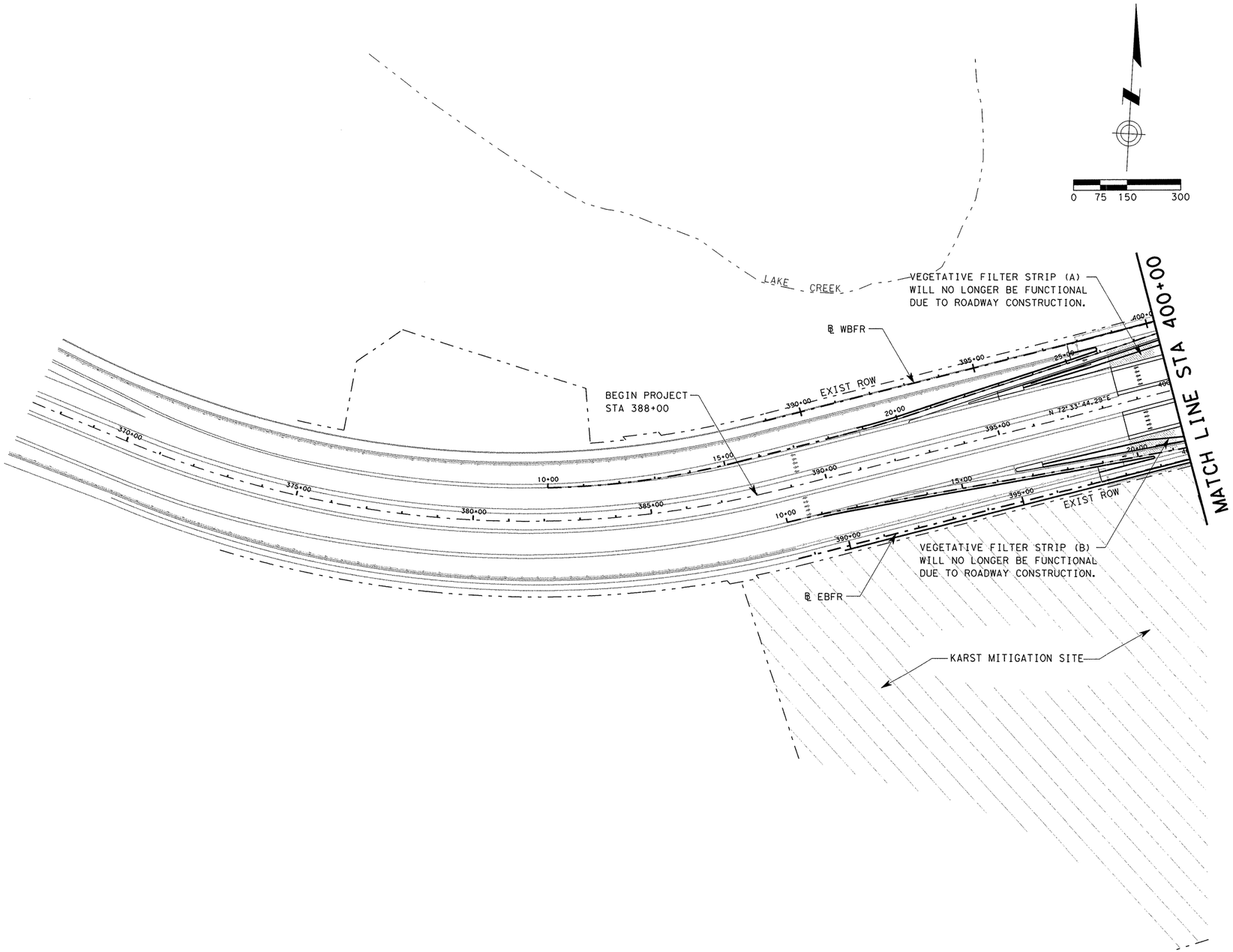

NOTES:

1. ALL DISTURBED AREAS WITHIN THE PROJECT LIMITS WILL BE SEEDED UPON COMPLETION OF CONSTRUCTION.
2. SEE STORM WATER POLLUTION PREVENTION PLAN FOR ADDITIONAL DETAILS AND INFORMATION CONCERNING TEMPORARY WATER QUALITY MEASURES.

STATE OF TEXAS
KALEUNG LEE
88558
LICENSED
PROFESSIONAL ENGINEER
4/11/11

REV. No.	DATE	REVISION	BY
△			
△			
△			

PBSJ
an Atkins company
TBPE REG. # F-474

Texas Department of Transportation
Austin District
©2011 by TxDOT

SH 45 / O'CONNOR DRIVE
WATER QUALITY
OVERALL LAYOUT
STA 388+00 TO 400+00

SCALE: 1"=300'
SHEET 1 OF 3

DESIGNED: AB	FED. RD DIV. No.	STATE	PROJECT No.			HIGHWAY No.
CHECKED: AB	6	TEXAS				LP 1/SH 45
DRAWN: KJK	STATE DISTRICT	COUNTY	CONTROL No.	SECTION No.	JOB No.	SHEET No.
CHECKED: KL	AUSTIN	WILLIAMSON	0683	06	027	696

DATE: 4/11/2011 TIME: 9:51:44 AM

PLOT DRIVER: RD*11x17*PDF.plt
PEN TABLE: plotordr*ocon.tbl
FILE: r:\Trans-Design\o'connor\cadd\drn\OC45wq101.dgn

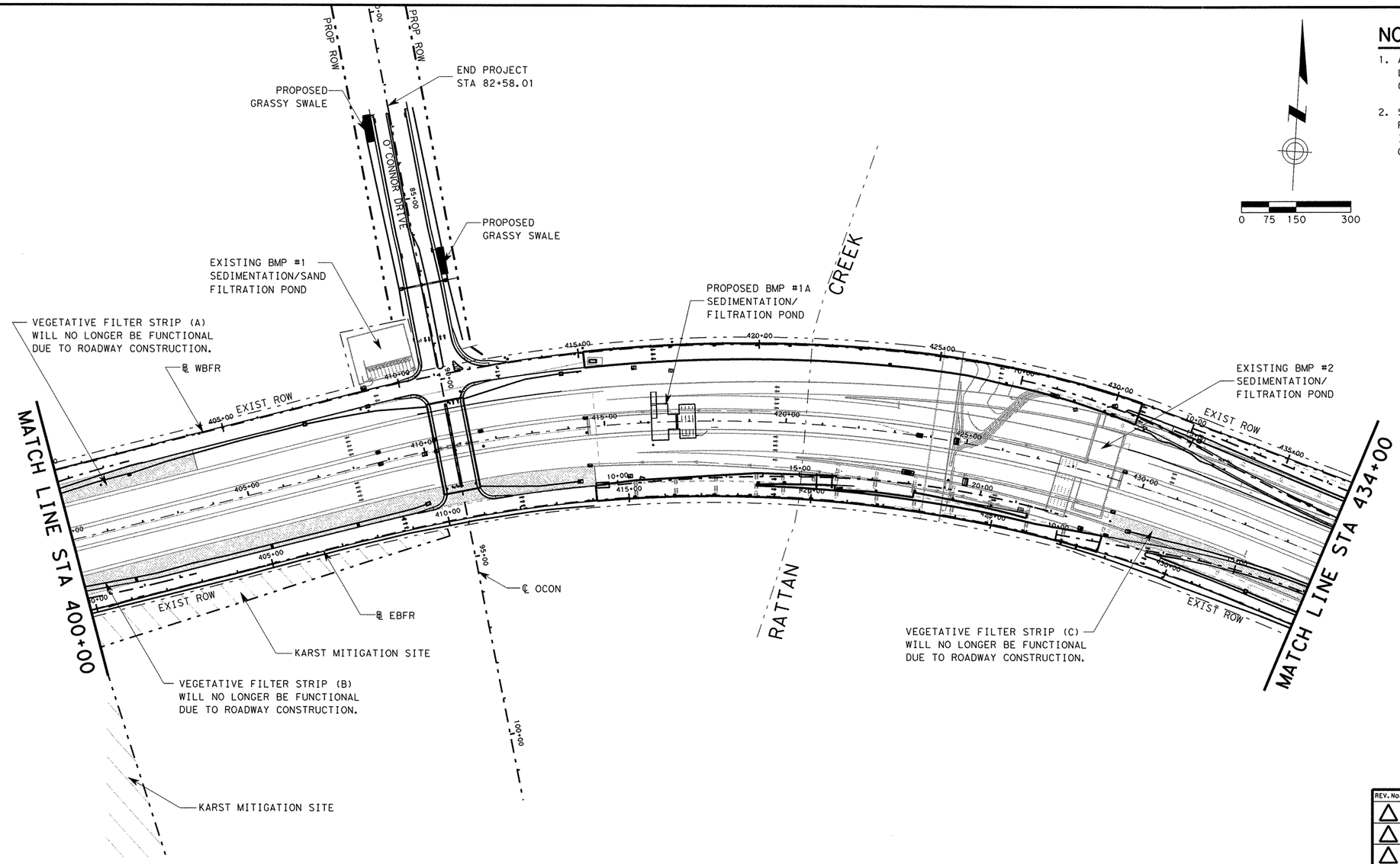

NOTES:

1. ALL DISTURBED AREAS WITHIN THE PROJECT LIMITS WILL BE SEEDED UPON COMPLETION OF CONSTRUCTION.
2. SEE STORM WATER POLLUTION PREVENTION PLAN FOR ADDITIONAL DETAILS AND INFORMATION CONCERNING TEMPORARY WATER QUALITY MEASURES.

0 75 150 300

STATE OF TEXAS
KALEUNG LEE
88558
LICENSED PROFESSIONAL ENGINEER
4/11/11

REV. No.	DATE	REVISION	BY
△			
△			
△			

PBSJ an Atkins company TBPE REG. # F-474

Texas Department of Transportation
Austin District
©2011 by TxDOT

SH 45 / O'CONNOR DRIVE
WATER QUALITY
OVERALL LAYOUT
STA. 400+00 TO 434+00

SCALE: 1"=300' SHEET 2 OF 3

DESIGNED: AB	FED. RD DIV. No.	STATE	PROJECT No.			HIGHWAY No.	
CHECKED: AB	6	TEXAS				LP 1/SH 45	
DRAWN: KJK	STATE DISTRICT	COUNTY	CONTROL No.	SECTION No.	JOB No.	SHEET No.	
CHECKED: KL	AUSTIN	WILLIAMSON	0683	06	027	697	

DATE: 4/11/2011 TIME: 9:51:45 AM

PLOT DRIVER: RD*11x17*PDF.plt
PEN TABLE: plotordr*ocon.tbl
FILE: r:\Trans-Design\o'connor\cadd\drn\OC45wq102.dgn

DATE: 4/11/2011 TIME: 9:51:48 AM

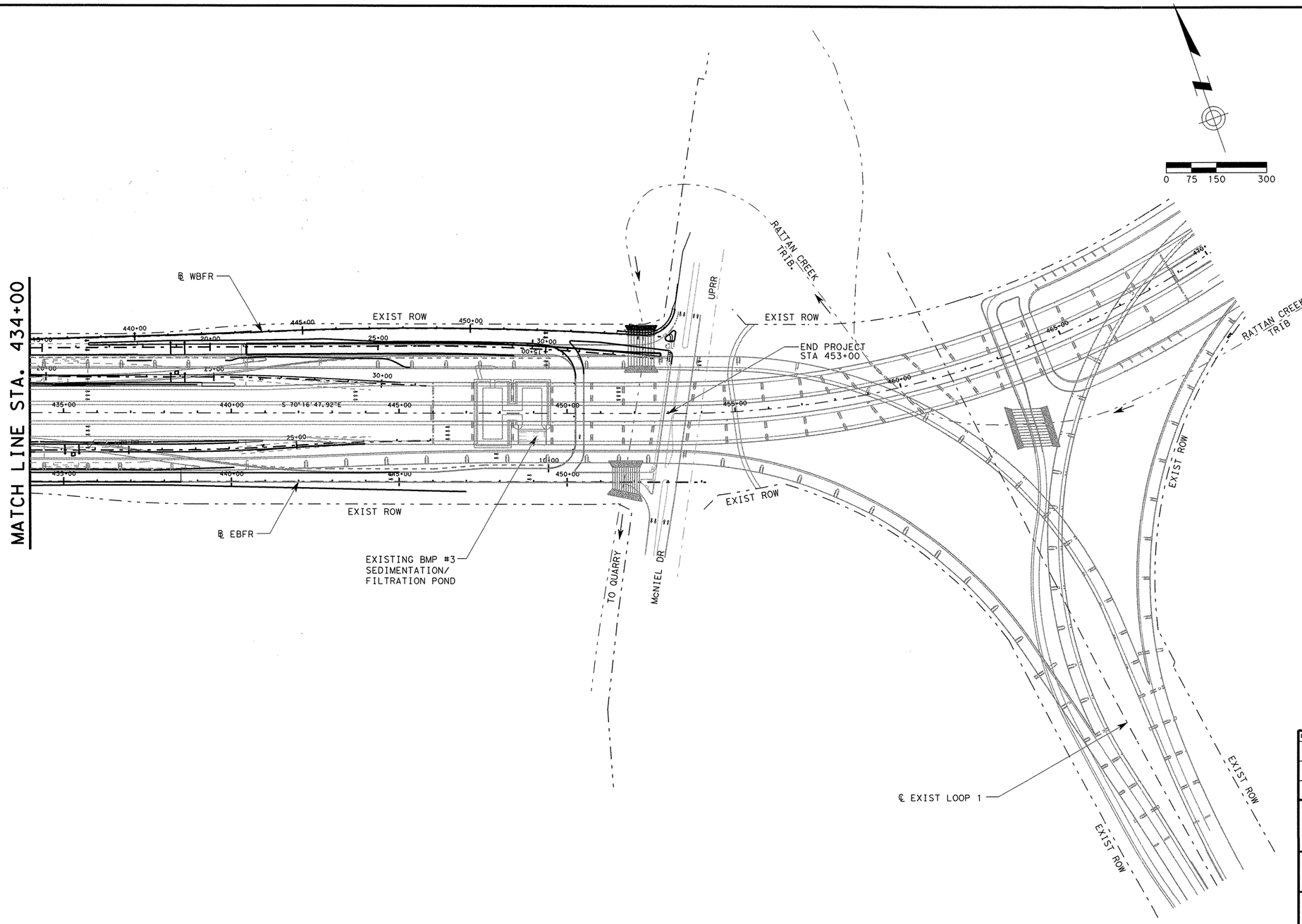

NOTES:

1. ALL DISTURBED AREAS WITHIN THE PROJECT LIMITS WILL BE SEEDED UPON COMPLETION OF CONSTRUCTION.
2. SEE STORM WATER POLLUTION PREVENTION PLAN FOR ADDITIONAL DETAILS AND INFORMATION CONCERNING TEMPORARY WATER QUALITY MEASURES.

STATE OF TEXAS
KALEUNG LEE
88558
LICENSED
PROFESSIONAL ENGINEER
4/11/11

REV. No.	DATE	REVISION	BY
△			
△			
△			

PBSJ
an Atkins company
TBPE REG. # F-474

Texas Department of Transportation
Austin District
©2011 by TxDOT

SH 45 / O'CONNOR DRIVE
WATER QUALITY
OVERALL LAYOUT
STA. 434+00 TO 453+00

SCALE: 1"=300' SHEET 3 OF 3

DESIGNED: AB	FED. RD DIV. No.	STATE	PROJECT No.			HIGHWAY No.	
CHECKED: AB	6	TEXAS				LP 1/SH 45	
DRAWN: KJK	STATE DISTRICT	COUNTY	CONTROL No.	SECTION No.	JOB No.	SHEET No.	
CHECKED: KL	AUSTIN	WILLIAMSON	0683	06	027	698	

PLOT DRIVER: RD*11x17*PDF.plt
PEN TABLE: plotordr*ocon.tbl
FILE: r:\Trans-Design\o'connor\cadd\drn\OC45wq103.dgn

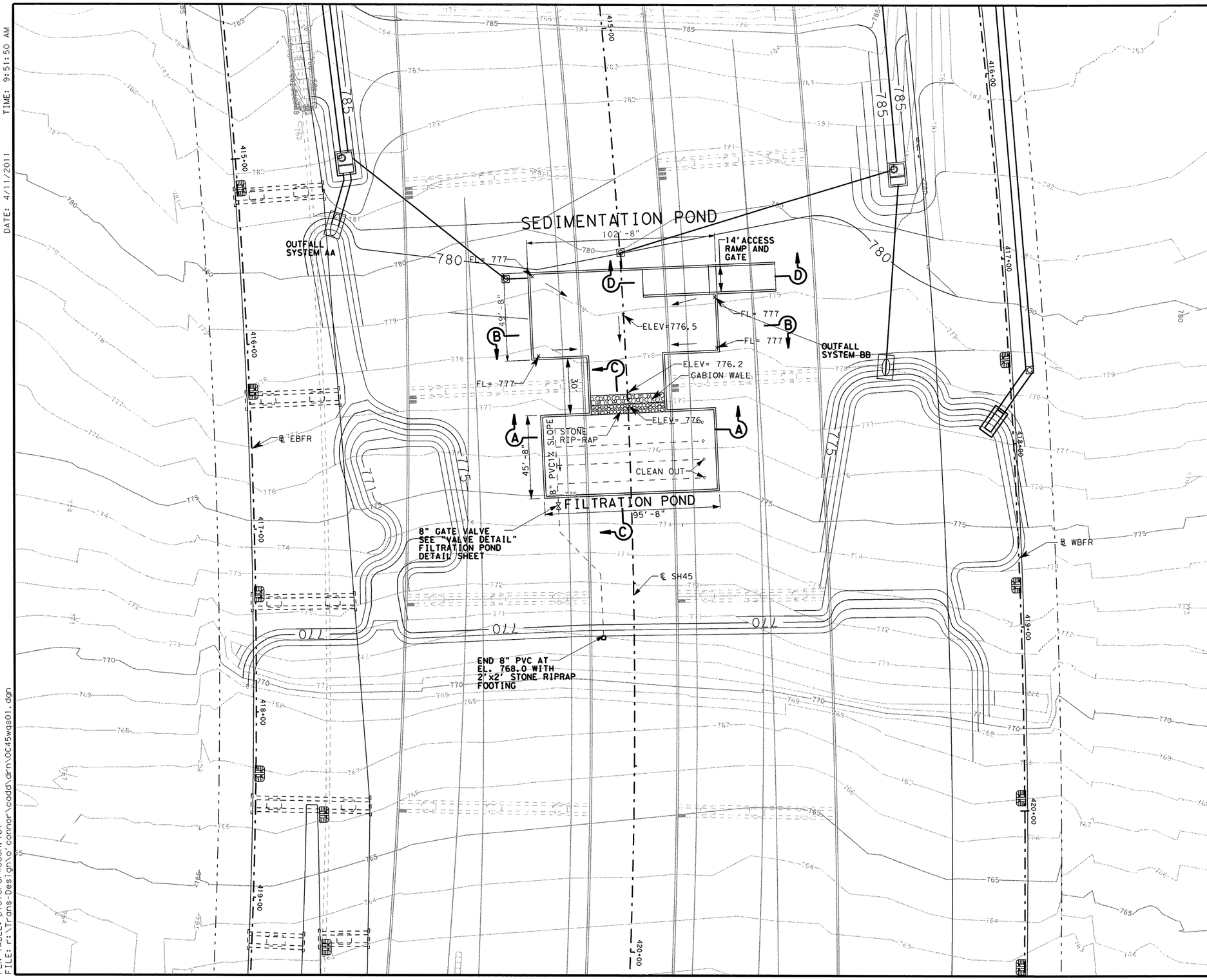

NOTES:

1. A 6' CHAIN LINK FENCE SHALL BE PLACED ALONG THE TOP OF THE RETAINING WALL FOR THE SEDIMENTATION AND FILTRATION POND.

0 25 50

STATE OF TEXAS
KALEUNG LEE
88558
LICENSED PROFESSIONAL ENGINEER
4/11/11

REV. No.	DATE	REVISION	BY
△			
△			
△			

PBSJ
an Atkins company
TBPE REG. # F-474

Texas Department of Transportation
Austin District
©2011 by TxDOT

SH 45 / O'CONNOR DRIVE
WATER QUALITY POND
BMP #1A
LAYOUT

SCALE: 1"=50'

SHEET 1 OF 3

DESIGNED: AB	FED. RD DIV. No.	STATE	PROJECT No.			HIGHWAY No.	
CHECKED: AB	6	TEXAS				LP 1/SH 45	
DRAWN: KJK	STATE DISTRICT	COUNTY	CONTROL No.	SECTION No.	JOB No.	SHEET No.	
CHECKED: KL	AUSTIN	WILLIAMSON	0683	06	027	699	

DATE: 4/11/2011 TIME: 9:51:50 AM

PLOT DRIVER: RD*11x17*PDF.plt
PEN TABLE: plotordr*ocon.tbl
FILE: r:\Trans-Design\o'connor\cadd\drn\0C45wqs01.dgn

DATE: 4/11/2011 TIME: 9:51:52 AM

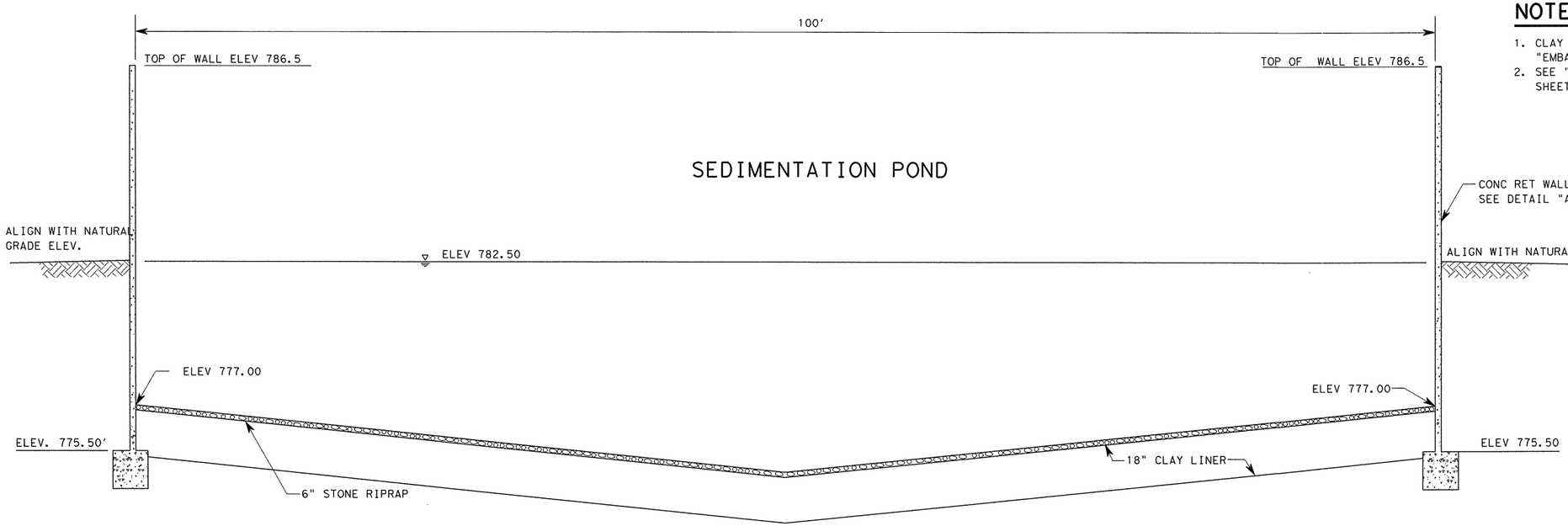

NOTES:

1. CLAY LINER SHALL BE PAID FOR AS "EMBANK (DENS CONT) (TY C MOD) (CL 3)"
2. SEE "WATER QUALITY BMP #1A SECTIONS" SHEET 3 FOR RETAINING WALL DETAILS.

SECTION "B-B"

NTS

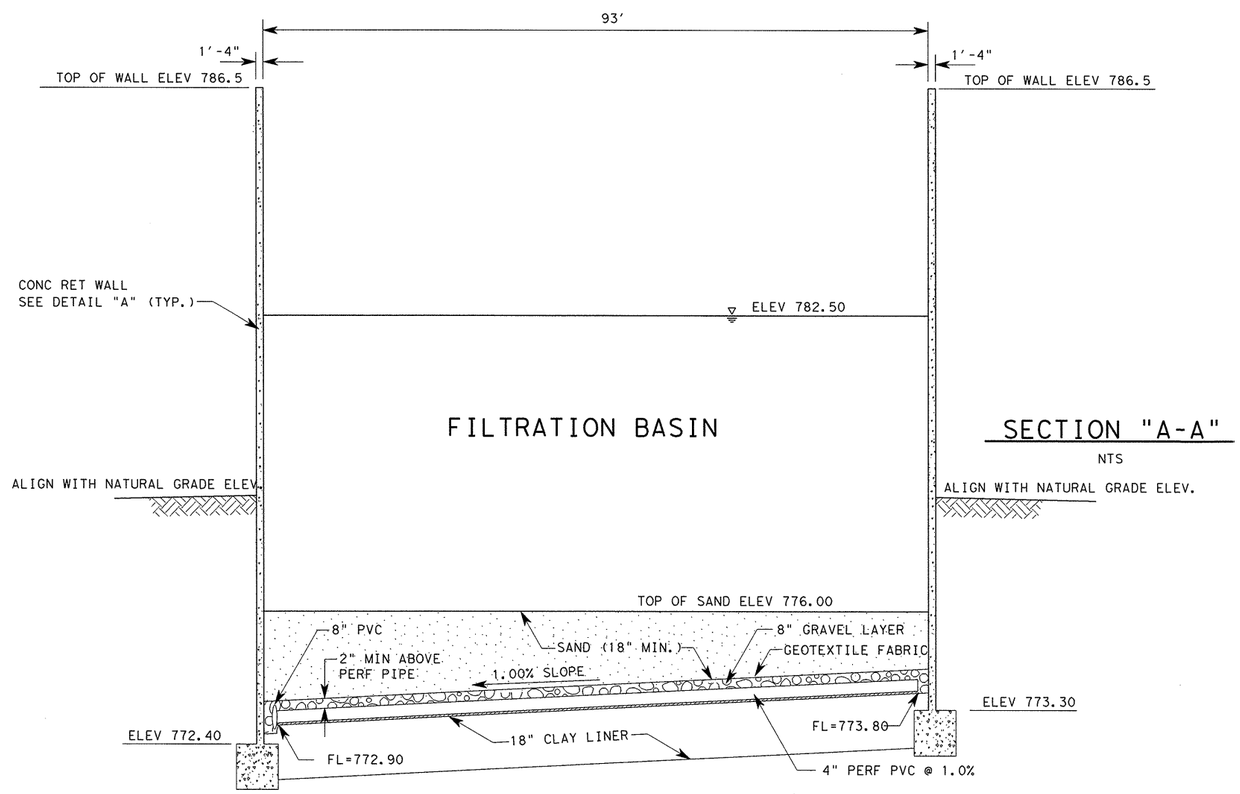

SECTION "A-A"

NTS

STATE OF TEXAS
KALEUNG LEE
88558
LICENSED
PROFESSIONAL ENGINEER
4/11/11

REV. No.	DATE	REVISION	BY
△			
△			
△			

PBSJ
an Atkins company
TBPE REG. # F-474

Texas Department of Transportation
Austin District
©2011 by TxDOT

SH 45 / O'CONNOR DRIVE
WATER QUALITY
BMP #1A
SECTIONS

SCALE: AS SHOWN

SHEET 2 OF 3

DESIGNED: AB	FED. RD DIV. No.	STATE	PROJECT No.			HIGHWAY No.	
CHECKED: AB	6	TEXAS				LP 1/SH 45	
DRAWN: KJK	STATE DISTRICT	COUNTY	CONTROL No.	SECTION No.	JOB No.	SHEET No.	
CHECKED: KL	AUSTIN	WILLIAMSON	0683	06	027	700	

PLOT DRIVER: RD*11x17*PDF.plt
PEN TABLE: plotordr*ocon.tbl
FILE: r:\Trans-Design\o'connor\cadd\drn\OC45wqs02.dgn

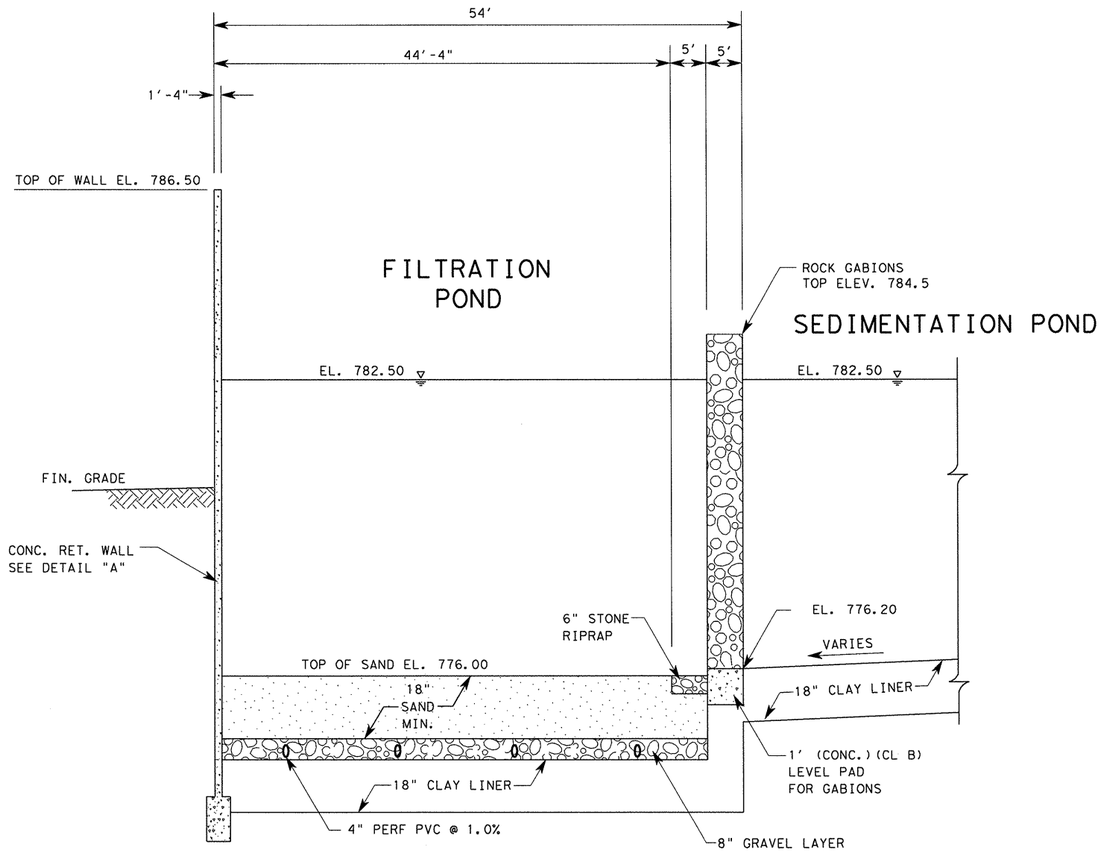

SECTION "C-C"

NTS

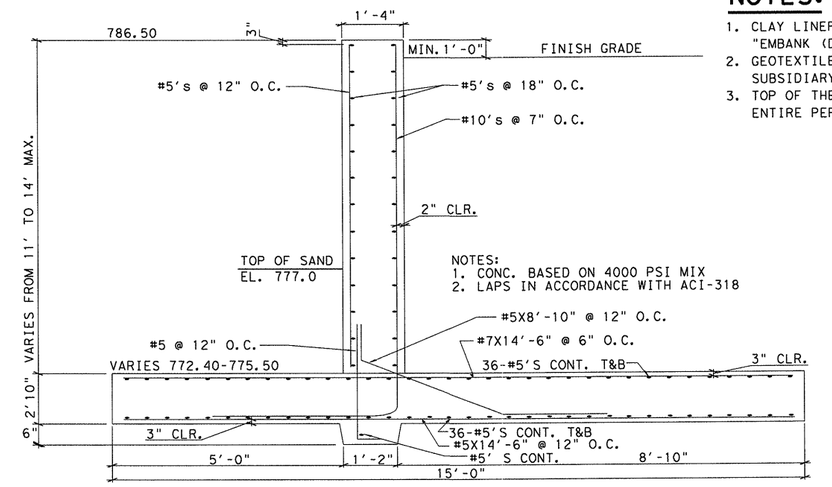

TYPICAL POND WALL SECTION

NTS

DETAIL "A"

NOTES:

1. CLAY LINER SHALL BE PAID FOR AS "EMBANK (DENS CONT)(TY C MOD)(CL 3)"
2. GEOTEXTILE FABRIC SHALL BE SUBSIDIARY TO "SAND FILTRATION SYSTEM".
3. TOP OF THE WALL IS CONSTANT FOR THE ENTIRE PERIMETER.

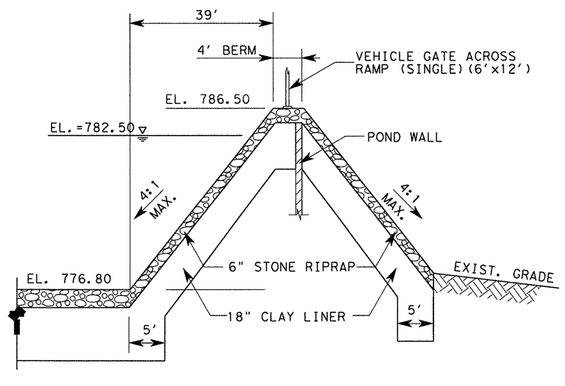

SECTION "D-D"

NTS

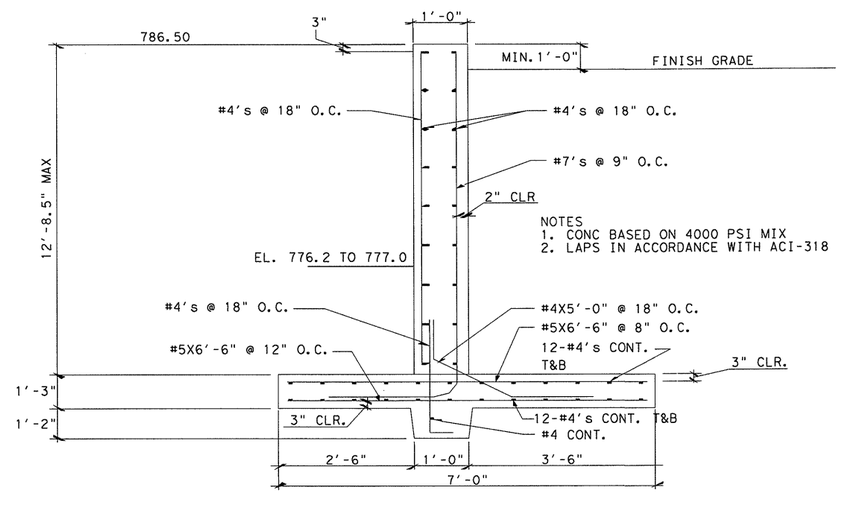

TYPICAL ACCESS RAMP WALL SECTION

NTS

DETAIL "B"

POND & RAMP DESIGN BY KA LEUNG LEE

WALL DESIGN BY SHAD SHAFIE

STATE OF TEXAS — KALEUNG LEE 88558 — LICENSED PROFESSIONAL ENGINEER — 4/12/11

STATE OF TEXAS — SHAD SHAFIE 86812 — LICENSED PROFESSIONAL ENGINEER — 4.11.11

REV. No.	DATE	REVISION	BY
△			
△			
△			

PBSJ an Atkins company TBPE REG. # F-474

Texas Department of Transportation Austin District

©2011 by TxDOT

SH 45 / O'CONNOR DRIVE WATER QUALITY BMP #1A SECTIONS

SCALE: AS SHOWN — SHEET 3 OF 3

DESIGNED: AB	FED. RD DIV. No.	STATE	PROJECT No.			HIGHWAY No.	
CHECKED: AB	6	TEXAS				LP 1/SH 45	
DRAWN: KJK	STATE DISTRICT	COUNTY	CONTROL No.	SECTION No.	JOB No.	SHEET No.	
CHECKED: KL	AUSTIN	WILLIAMSON	0683	06	027	701	

DATE: 4/11/2011 TIME: 9:51:53 AM
PLOT DRIVER: RD*11x17*PDF.plt
PEN TABLE: plotordr*ocon.tbl
FILE: r:\Trans-Design\o'connor\cadd\drn\OC45wqs03.dgn

During the planning phase of project development the following environmental permits, issues and commitments have been developed during coordination with resource agencies, local governmental entities and the general public. Any change orders and/or deviations from the final design must be reported to the Engineer prior to the commencement of construction activities, as additional environmental clearances may be required.

I. Clean Water Act, Section 402 National Pollutant Discharge Elimination System

(Addresses MS4 requirements for project)

☐ No Action Required ☒ Required Action

Action No.	Waters of the US/Station # R/L of Centerline	Commitment
1.		TxDOT is required to prepare a Storm Water Pollution Prevention Plan (SW3P) and to file a Notice of Intent (NOI) to begin construction for a Texas Pollutant Discharge Elimination System (TPDES) Construction General Permit (CGP). A SW3P will be included in the construction plans.
2.		The Contractor shall prepare a NOI for all on-right-of-way Project Specific Locations (PSLs) where disturbance is greater than five acres and submit a copy to the Project Engineer. The Contractor's NOI shall be posted onsite and submitted to Texas Commission on Environmental Quality (TCEQ) as required in the CGP.
3.		The Contractor is wholly responsible for off-right-of-way PSL authorizations.
4.		Apply erosion control measures to minimize the loss of sediment including blankets/mulch/matting for erosion control, silt fences, and/or rock berms for sediment control, grassy swales, vegetative filter strip, and sand filtration systems for post-construction total suspended solids control. Erosion controls would be in compliance with TxDOT Standards Specifications and would be in place, according to the construction plans, prior to commencement of construction related activities.
5.		After stabilization of the project is complete and final stabilization is achieved, a Notice of Termination (NOT) must be submitted to TCEQ.

II. Clean Water Act, Section 401 and 404 Compliance

Filling, dredging or excavating in any water bodies, rivers, creeks, streams, wetlands or wet areas is prohibited, unless specified in the USACE permit and approved by the Engineer.

☒ No Permit Required ☒ 404 Permit and 401 Certification Required

The Contractor must adhere to all of the terms and conditions associated with the following permit(s):

Permit	Required Action	Waters of the US	Applicable Plan Sheet Title

III. Cultural Resources

☐ No Action Required ☒ Required Action

Action No.	Station # R/L of Centerline	Commitment
1.		If previously unrecorded archeological sites are found, construction will cease immediately in the affected area and TxDOT will be notified.

Refer to TxDOT Standard Specifications in the event historical issues or archeological artifacts are found during construction. Upon discovery of archeological artifacts (bones, burnt rock, flint, pottery, etc.) cease work in the immediate area and contact the Engineer immediately.

IV. Hazardous Materials or Contamination Issues

☐ No Action Required ☒ Required Action

Action No.	Station # R/L of Centerline	Commitment
1.		Should soil and/or groundwater contamination be encountered within the right-of-way during construction operations, the impacted area will be remediated to meet all applicable federal, state, and local standards. Remediation of such property shall be the responsibility of TxDOT.
2.		The Contractor will take appropriate measures to prevent, minimize and control the spill of fuels, lubricants and hazardous materials in the construction staging area; hazardous items that require special handling will be removed only by certified and licensed abatement contractors having documentation of prior acceptable work.

If potentially hazardous material and/or contaminated media (i.e. soil, groundwater, surface water, sediment, building materials) are unexpectedly encountered during construction, cease work in the immediate area and contact the Engineer immediately.

V. Federal Listed, and Proposed Threatened and Endangered Species, Critical Habitat, State Listed Species, Candidate Species and Migratory Birds

☐ No Action Required ☒ Required Action

Action No.	Station # R/L of Centerline	Commitment
1.		Whenever possible, trees will be removed outside of the typical nesting season (March 1 through August 15). Should migratory bird nests be encountered on-site during project construction, every effort would be made to avoid any disturbance to the maximum extent practicable. Take of migratory birds, bird nests, and bird egg is prohibited under the act. If clearing is required during the typical nesting season a survey for active bird's nests will be conducted prior to clearing.

If any of the listed species are observed, cease work in the immediate area, do not disturb species or habitat and contact the Engineer immediately. The work may not remove active nests from bridges and other structures during nesting season of the birds associated with the nests. If caves or sinkholes are discovered, cease work in the immediate area, and contact the Engineer immediately.

VI. Vegetation Resources

☐ No Action Required ☒ Required Action

Action No.	Station # R/L of Centerline	Commitment
1.		Vegetation shall be cleared in areas only warranted by construction.
2.		TxDOT will maintain the ROW area within 200 meters of Chaos Cave Karst Preserve avoiding use of potential contaminants (fertilizers, pesticides, and herbicides) and avoiding the introduction of non-native species, primarily fire ants and implement specific actions to control fire ants within the ROW. The ROW shall be managed by use of low-maintenance native vegetation.

VII. Edwards Aquifer

☐ No Action Required ☒ Required Action

Action No.	Station # R/L of Centerline	Commitment
1.		The project is located within the Edwards Aquifer Recharge Zone. TxDOT is required to complete a Water Pollution Abatement Plan (WPAP) and submit for approval to TCEQ.
2.		Contractor shall abide by all conditions set forth in the TCEQ WPAP Approval letter.
3.		The contractor shall install BMPs to reduce TSS loading to required specifications.
4.		Contractor shall abide by WPAP & keep a copy of WPAP & Approval letter on-site.
5.		If any voids are found during construction, construction will cease within a 500-ft radius of the void. The engineer shall notify the District Environmental Coordinator or DEQC immediately.
6.		All exposed karst features shall be covered when the geologist is not onsite to avoid human entry and to prevent altering the moisture regime.

VIII. Other Environmental Issues

☐ No Action Required ☒ Required Action

Action No.	Station # R/L of Centerline	Commitment
1.		The contractor shall make every reasonable effort to minimize construction noise through abatement measures such as work-hour controls and proper maintenance of muffler systems.
2.		The contractor shall abide by agreements made between TxDOT and the Upper Brushy Creek Water Control and Improvement District (District). The District owns and manages Dam #9 which impounds storm water from Rattan Creek. Potential impounding limits include portions of TxDOT ROW.

STATE OF TEXAS
DAVID M. HARRIS
94995
LICENSED
PROFESSIONAL ENGINEER

David Harris
4/11/11

REV. No.	DATE	REVISION	BY
△			
△			
△			

PBSJ
an Atkins company
TBPE REG. # F-474

Texas Department of Transportation
Austin District
©2011 by TxDOT

SH 45 / O'CONNOR DRIVE ENVIRONMENTAL PERMITS, ISSUES AND COMMITMENTS (EPIC)

DESIGNED: AB	FED. RD DIV. No.	STATE	PROJECT No.			HIGHWAY No.
CHECKED: AB	6	TEXAS				LP 1/SH 45
DRAWN: KJK	STATE DISTRICT	COUNTY	CONTROL No.	SECTION No.	JOB No.	SHEET No.
CHECKED: JSK	AUSTIN	WILLIAMSON	0683	06	027	702

DATE: 4/11/2011 TIME: 9:51:55 AM
PLOT DRIVER: RD*11x17*PDF.plt
PEN TABLE: plotord*ocon.tbl
FILE: r:\Trans-Design\o'connor\CADD\drn\OC45epic01.dgn

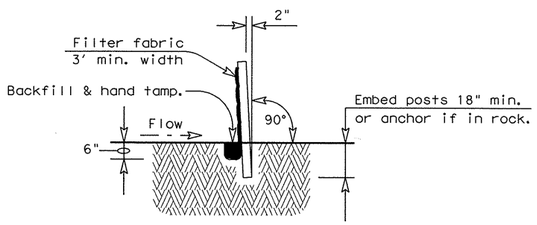

SECTION A-A

GENERAL NOTES

1. The guidelines shown hereon are suggestions only and may be modified by the Engineer.

PLAN SHEET LEGEND

Sediment Control Fence —— SCF ——

SEDIMENT CONTROL FENCE USAGE GUIDELINES

A sediment control fence may be constructed near the downstream perimeter of a disturbed area along a contour to intercept sediment from overland runoff. A 2 year storm frequency may be used to calculate the flow rate to be filtered.

Sediment control fence should be sized to filter a max. flow through rate of 100 GPM/FT^2. Sediment control fence is not recommended to control erosion from a drainage area larger than 2 acres.

Galv. Hinge joint knot woven mesh (12.5 Ga. Min.) requires a minimum of five horizontal wires spaced at a max. 12 inches apart and all vertical wires spaced at a max. 12 inches apart.

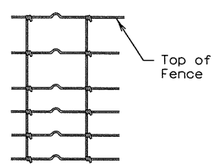

Hinge Joint Knot Woven Mesh (Option)

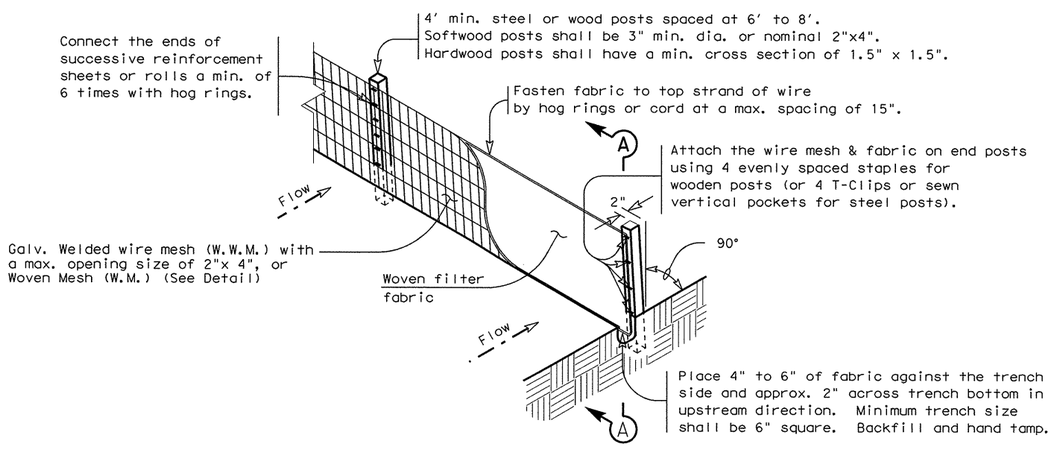

TEMPORARY SEDIMENT CONTROL FENCE

—— SCF ——

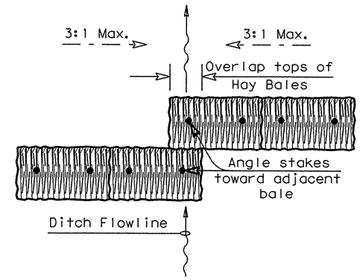

PLAN VIEW

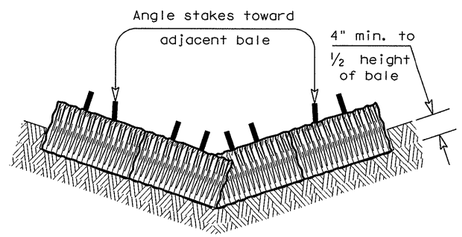

PROFILE VIEW

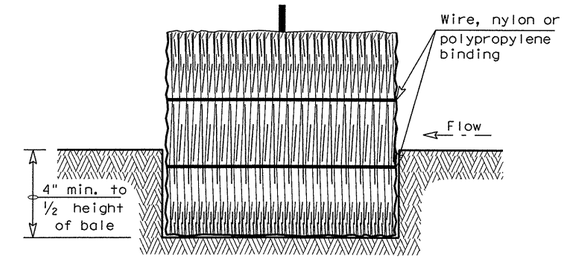

SECTION B-B

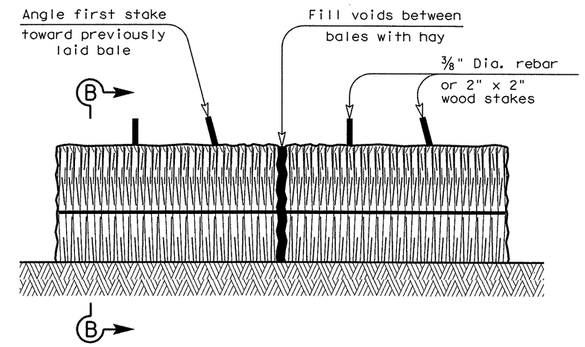

BALED HAY FOR EROSION CONTROL

—— BH ——

PLANS SHEET LEGEND

Baled Hay —— BH ——

BALED HAY USAGE GUIDELINES

A Baled Hay installation may be constructed near the downstream perimeter of a disturbed area along a contour to intercept sediment from overland runoff. A two year storm frequency may be used to calculate the flow rate to be filtered. The installation should be sized to filter a maximum flow thru rate of 5 GPM/FT^2 of cross sectional area. Baled hay may be used at the following locations:

1. Where the runoff approaching the baled hay flows over disturbed soil for less than 100'. If the slope of the disturbed soil exceeds 10%, the length of slope upstream the baled hay should be less than 50'.
2. Where the installation will be required for less than 3 months.
3. Where the contributing drainage area is less than ½ acre.

For Baled Hay installations in small ditches, the additional following considerations apply:

1. The ditch sideslopes should be graded as flat as possible to maximize the drainage flowrate thru the hay.
2. The ditch should be graded large enough to contain the overtopping drainage when sediment has filled to the top of the baled hay.

Bales should be replaced usually every 2 months or more often during wet weather when loss of structural integrity is accelerated.

GENERAL NOTES

1. Hay bales shall be a minimum of 30" in length and weigh a minimum of 50 Lbs.
2. Hay bales shall be bound by either wire or nylon or polypropylene string. The bales shall be composed entirely of vegetative matter.
3. Hay bales shall be embedded in the soil a minimum of 4" and where possible ½ the height of the bale.
4. Hay bales shall be placed in a row with ends tightly abutting the adjacent bales. The bales shall be placed with bindings parallel to the ground.
5. Hay bales shall be securely anchored in place with ⅜" Dia. rebar or 2" x 2" wood stakes, driven through the bales. The first stake shall be angled towards the previously laid bale to force the bales together.
6. The guidelines shown hereon are suggestions only and may be modified by the Engineer.

Texas Department of Transportation
Design Division (Roadway)

TEMPORARY EROSION, SEDIMENT AND WATER POLLUTION CONTROL MEASURES

FENCE & BALED HAY

EC(1)-09

FILE: ec109.dgn	DN: HEJ	CK: HEJ	DW: BGD / TV	CK:		
©TxDOT JUNE 1993	DISTRICT	FEDERAL AID PROJECT				SHEET
REVISIONS	AUSTIN					703
Language added to the end of the standard sheet note for silt fence to allow for the use of the new backing.	COUNTY		CONTROL	SECT	JOB	HIGHWAY
	WILLIAMSON		0683	06	027	SH 45 LOOP 1

DISCLAIMER:
The use of this standard is governed by the "Texas Engineering Practice Act". The use of any other form or format is expressly prohibited. TxDOT assumes no responsibility for the conversion of this standard to other formats or for incorrect results or damages resulting from its use.

LEVELS D1 2 1

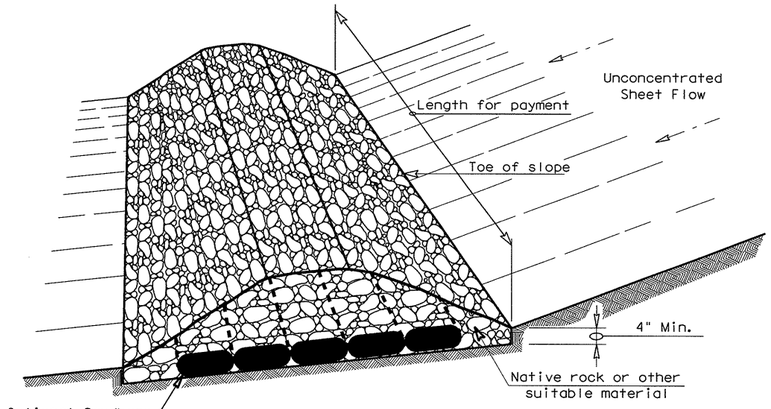

FILTER DAM AT TOE OF SLOPE

RFD1

TYPE 1

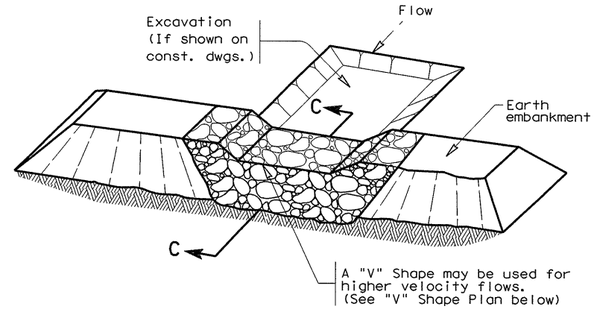

FILTER DAM AT SEDIMENT TRAP

RFD1 — OR — RFD2

TYPE 1 OR TYPE 2

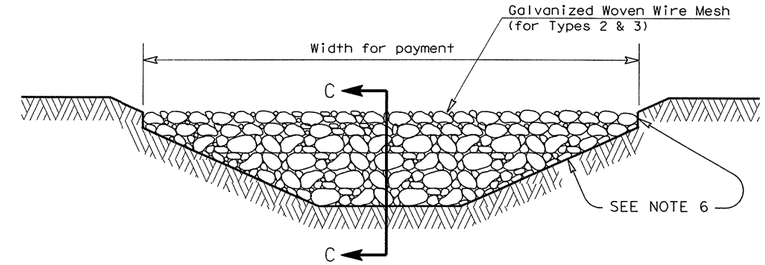

FILTER DAM AT CHANNEL SECTIONS

RFD1 — OR — RFD2 — OR — RFD3

TYPE 1 OR TYPE 2

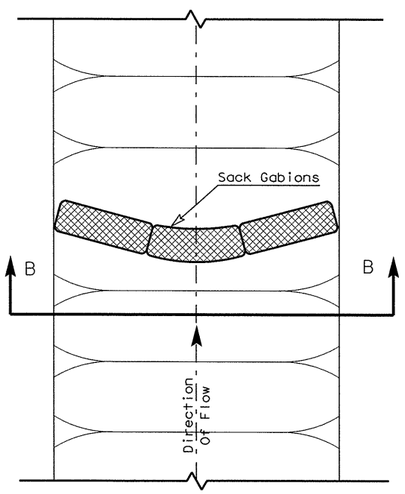

PLAN VIEW

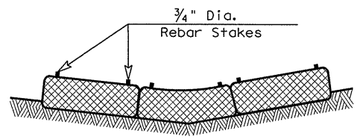

SECTION B-B

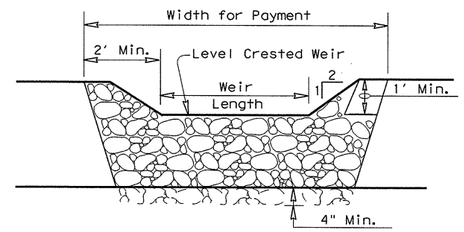

PROFILE

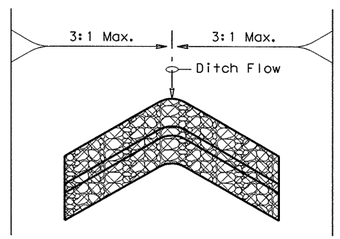

"V" SHAPE

(Plan View)

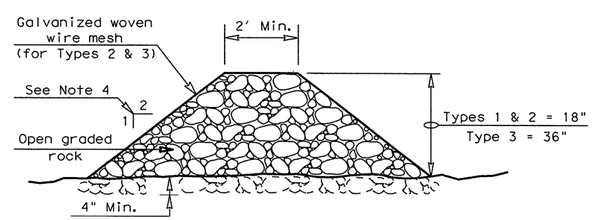

SECTION C-C

PLANS SHEET LEGEND

Type 1 Rock Filter Dam — RFD1

Type 2 Rock Filter Dam — RFD2

Type 3 Rock Filter Dam — RFD3

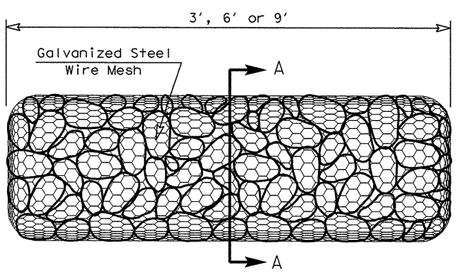

TYPE 4 (SACK GABIONS)

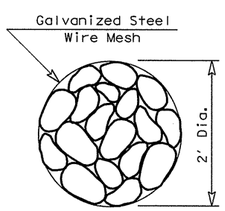

SECTION A-A

ROCK FILTER DAM USAGE GUIDELINES

Rock Filter Dams should be constructed downstream from disturbed areas to intercept sediment from overland runoff and/or concentrated flow. The dams should be sized to filter a maximum flow through rate of 60 GPM/FT^2 of cross sectional area. A 2 year storm frequency may be used to calculate the flow rate.

Type 1 (18" high with no wire mesh): Type 1 may be used at the toe of slopes, around inlets, in small ditches, and at dike or swale outlets. This type of dam is recommended to control erosion from a drainage area of 5 acres or less. Type 1 may not be used in concentrated high velocity flows (approx. 8 Ft/Sec or more) in which aggregate wash out may occur. Sandbags may be used at the embedded foundation (4" deep min.) for better filtering efficiency of low flows if called for on the plans or directed by the Engineer.

Type 2 (18" high with wire mesh): Type 2 may be used in ditches and at dike or swale outlets.

Type 3 (36" high with wire mesh): Type 3 may be used in stream flow and should be secured to the stream bed.

Type 4 (Sack gabions): Type 4 May be used in ditches and smaller channels to form an erosion control dam.

GENERAL NOTES

1. If shown on the plans or directed by the Engineer, filter dams should be placed near the toe of slopes where erosion is anticipated, upstream and/or downstream at drainage structures, and in roadway ditches and channels to collect sediment.
2. Materials (aggregate, wire mesh, sandbags, etc.) shall be as indicated by the specification for "Rock Filter Dams for Erosion and Sedimentation Control".
3. The rock filter dam dimensions shall be as indicated on the SW3P plans.
4. Side slopes should be 2:1 or flatter. Dams within the safety zone shall have sideslopes of 6:1 or flatter.
5. Maintain a minimum of 1' between top of rock filter dam weir and top of embankment for filter dams at sediment traps.
6. Filter dams should be embedded a minimum of 4" into existing ground.
7. The sediment trap for ponding of sediment laden runoff shall be of the dimensions shown on the plans.
8. Rock filter dam types 2 & 3 shall be secured with 20 gauge galvanized woven wire mesh with 1" diameter hexagonal openings. The aggregate shall be placed on the mesh to the height & slopes specified. The mesh shall be folded at the upstream side over the aggregate and tightly secured to itself on the downstream side using wire ties or hog rings. In stream use the mesh should be secured or staked to the stream bed prior to aggregate placement.
9. Sack Gabions should be staked down with ¾" dia. rebar stakes.
10. Flow outlet should be onto a stabilized area (vegetation, rock, etc.).
11. The guidelines shown hereon are suggestions only and may be modified by the Engineer.

DISCLAIMER:
The use of this standard is governed by the "Texas Engineering Practice Act". No warranty of any kind is made by TxDOT for any purpose whatsoever. TxDOT assumes no responsibility for the conversion of this standard to other formats or for incorrect results or damages resulting from its use.

LEVELS D

Texas Department of Transportation
Design Division (Roadway)

TEMPORARY EROSION, SEDIMENT AND WATER POLLUTION CONTROL MEASURES

ROCK FILTER DAMS

EC(2)-93

FILE: EC293.DGN	DN: HEJ	CK: HEJ	DW: BGD	CK:	
© TxDOT JUNE 1993	DISTRICT	FEDERAL AID PROJECT			SHEET
REVISIONS	AUSTIN				704
	COUNTY		CONTROL	SECT	JOB	HIGHWAY
	WILLIAMSON		0683	06	027	SH 45 LOOP 1

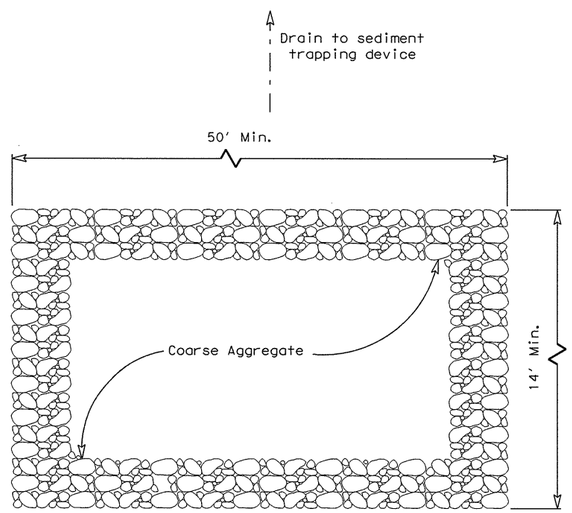

PLAN

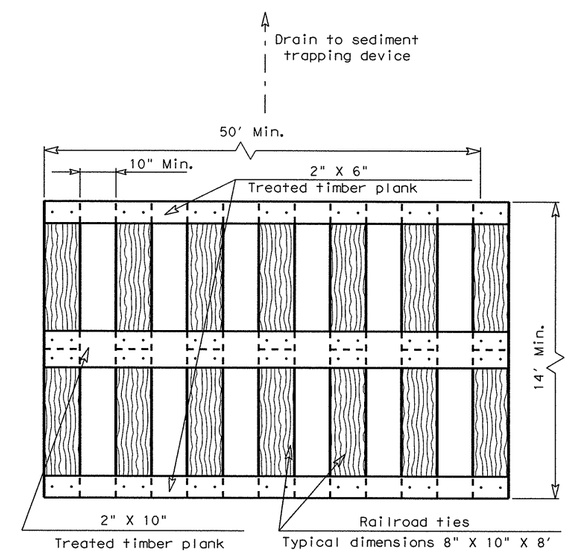

PLAN

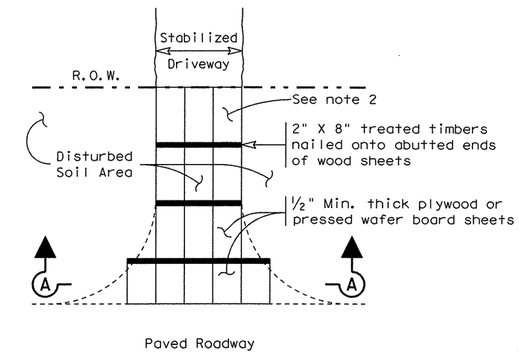

PLAN

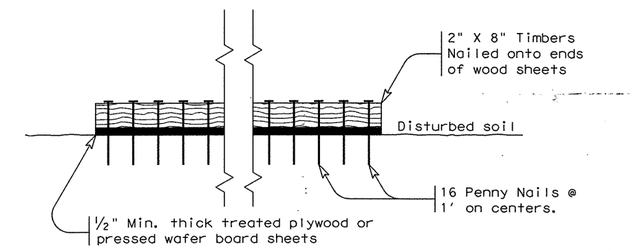

SECTION A-A

CONSTRUCTION EXIT (TYPE 3)

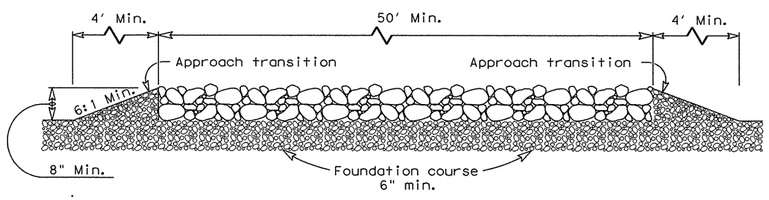

PROFILE

CONSTRUCTION EXIT (TYPE 1)

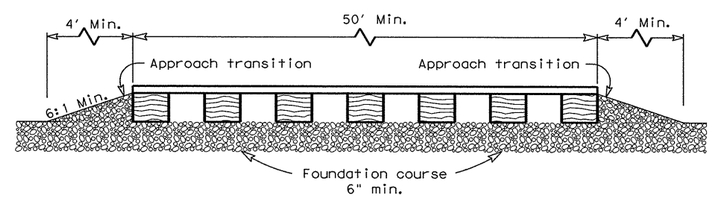

PROFILE

CONSTRUCTION EXIT (TYPE 2)

GENERAL NOTES

1. The length of the type 1 construction exit shall be as indicated on the plans, but not less than 50′.
2. The coarse aggregate should be open graded with a size of 4" to 8".
3. The approach transitions should be no steeper than 6:1 and constructed as directed by the Engineer.
4. The construction exit foundation course shall be flexible base, bituminous concrete, portland cement concrete or other material as approved by the Engineer.
5. The construction exit shall be graded to allow drainage to a sediment trapping device.
6. The guidelines shown hereon are suggestions only and may be modified by the Engineer.

GENERAL NOTES

1. The length of the type 2 construction exit shall be as indicated on the plans, but not less than 50′.
2. The treated timber planks shall be attached to the railroad ties with ½"x 6" min. lag bolts. Other fasteners may be used as approved by the Engineer.
3. The treated timber planks shall be #2 grade min., and should be free from large and loose knots.
4. The approach transitions shall be no steeper than 6:1 and constructed as directed by the Engineer.
5. The construction exit foundation course shall be flexible base, bituminous concrete, portland cement concrete or other material as approved by the Engineer.
6. The construction exit should be graded to allow drainage to a sediment trapping device.
7. The guidelines shown hereon are suggestions only and may be modified by the Engineer.

GENERAL NOTES

1. The length of the type 3 construction exit shall be as shown on the plans, or as directed by the Engineer.
2. The type 3 construction exit may be constructed from open graded crushed stone with a size of two to four inches spread a min. of 4" thick to the limits shown on the plans.
3. The treated timber planks shall be #2 grade min., and should be free from large and loose knots.
4. The guidelines shown hereon are suggestions only and may be modified by the Engineer.

DISCLAIMER:
The use of this standard is governed by the "Texas Engineering Practice Act". No warranty of any kind is made by TxDOT for any purpose whatsoever. TxDOT assumes no responsibility for the conversion of this standard to other formats or for incorrect results or damages resulting from its use.

LEVELS DIS.

Texas Department of Transportation
Design Division (Roadway)

TEMPORARY EROSION, SEDIMENT AND WATER POLLUTION CONTROL MEASURES

CONSTRUCTION EXITS

EC(3)-93

FILE: EC393.DGN	DN: HEJ	CK: HEJ	DW: BGD	CK:	
©TxDOT JUNE 1993	DISTRICT	FEDERAL AID PROJECT			SHEET
REVISIONS	AUSTIN				705
	COUNTY		CONTROL	SECT	JOB	HIGHWAY
	WILLIAMSON		0683	06	027	SH 45 LOOP 1

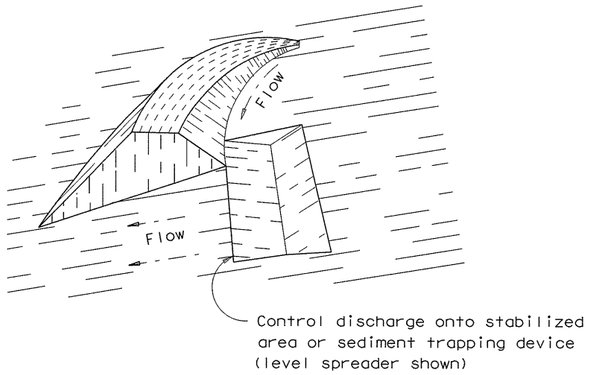

PERIMETER DIKE

Dike —D—

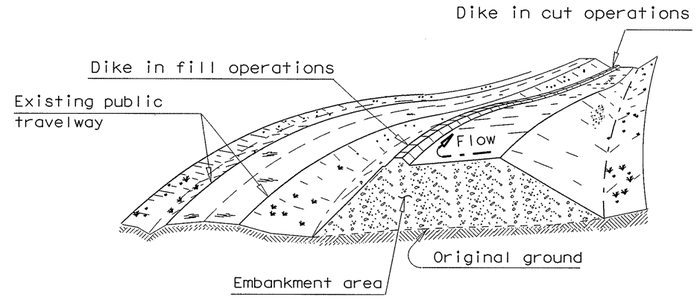

DIVERSION DIKE

Dike —D—

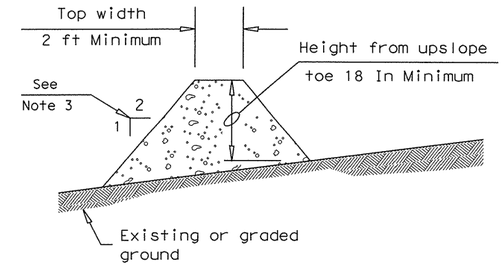

TYPICAL DIKE CONFIGURATION

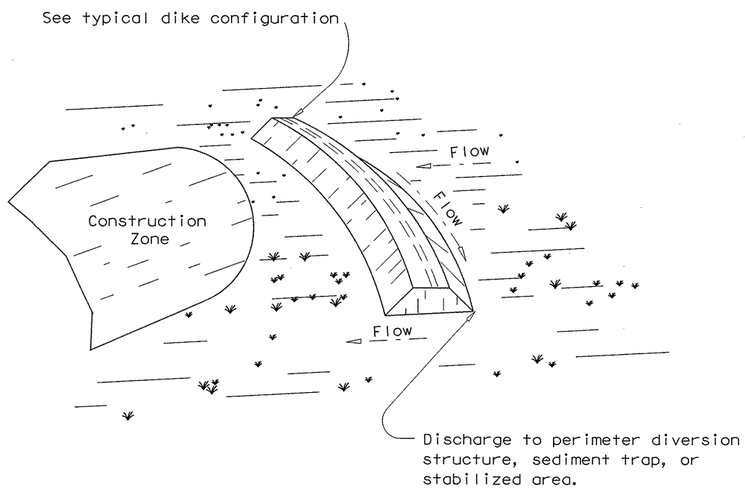

INTERCEPTOR DIKE

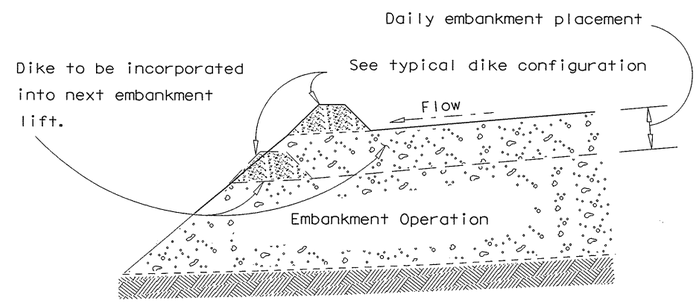

EMBANKMENT SECTION - DIVERSION DIKE

Dike —D—

GENERAL NOTES:

1. Soil used in dike construction shall be machine compacted.
2. Top width and height of dike may be modified with prior approval of the Engineer.
3. Side slopes within the safety clear zone of a roadway shall be 6:1 or flatter.
4. Grading shall be shown elsewhere in the plans or as directed by the Engineer.
5. The Engineer reserves the right to modify the dimensions shown for the dike dependent on runoff volume characteristics.
6. Dikes that are in place for more than 14 calendar days should be stabilized to prevent sediment runoff.
7. **The guidelines shown hereon are suggestions only and may be modified by the Engineer.**

DIKE USAGE GUIDELINES

A dike may be used to intercept runoff and divert it around unstabilized areas or to divert sediment laden runoff to an erosion control device (sediment basin or trap, rock filter dam, etc.).

The drainage area contributing runoff to a dike should not exceed 5 acres. The spacing of dikes should be as follows:

Slope of disturbed areas above dike	greater than 10%	5 - 10%	less than 5%
Maximum distance between dikes	100′	200′	300′

Intercepted runoff flowing along a dike should outlet to a stabilized area (vegetation, rock, etc.).

PLANS SHEET LEGEND

Dike —D—

DISCLAIMER:
The use of this standard is governed by the "Texas Engineering Practice Act". No warranty of any kind is made by TxDOT for any purpose whatsoever. TxDOT assumes no responsibility for the conversion of this standard to other formats or for incorrect results or damages resulting from its use.

LEVELS 01.

Texas Department of Transportation
Design Division (Roadway)

TEMPORARY EROSION, SEDIMENT AND WATER POLLUTION CONTROL MEASURES

DIKES (EARTHWORK FOR EROSION CONTROL)

EC(4)-93

FILE: EC493.DGN	DN: HEJ	CK: HEJ	DW: BGD		CK:
©TxDOT JUNE 1993	DISTRICT	FEDERAL AID PROJECT			SHEET
REVISIONS	AUSTIN				706
	COUNTY		CONTROL	SECT	JOB	HIGHWAY
	WILLIAMSON		0683	06	027	SH 45 LOOP 1

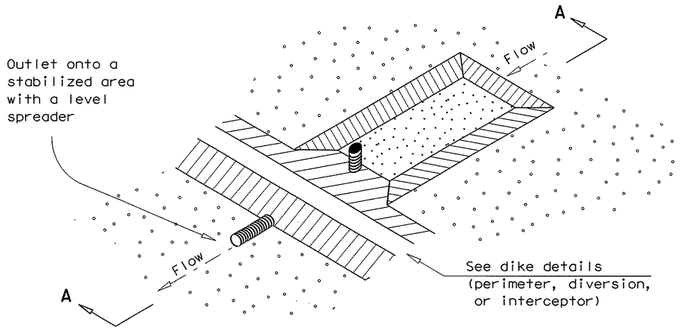

SEDIMENT BASIN AND/OR TRAP WITH PIPE OUTLET

ST/PO

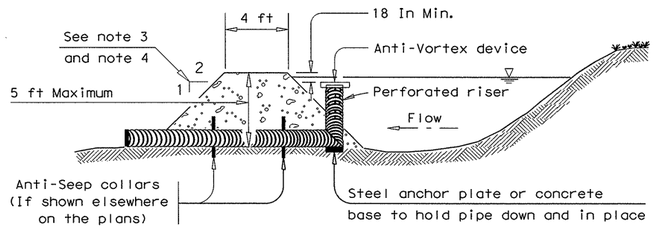

SECTION A-A

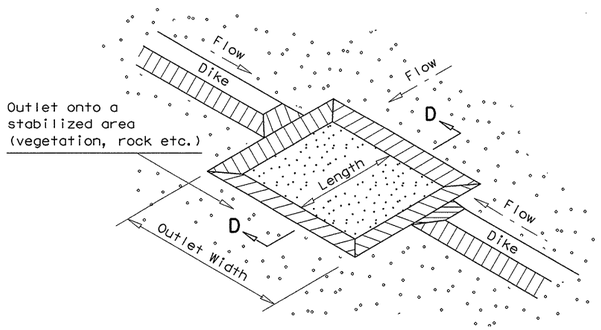

SEDIMENT TRAP WITH LEVEL STABILIZED OUTLET

ST

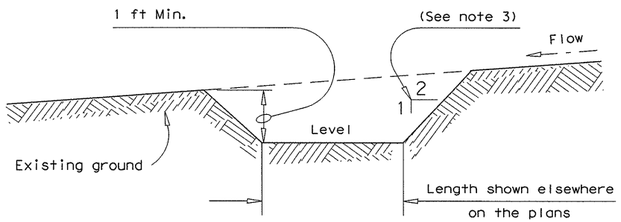

SECTION D-D

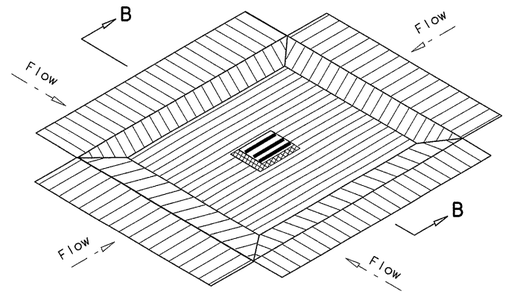

DROP INLET SEDIMENT TRAP

ST-DI

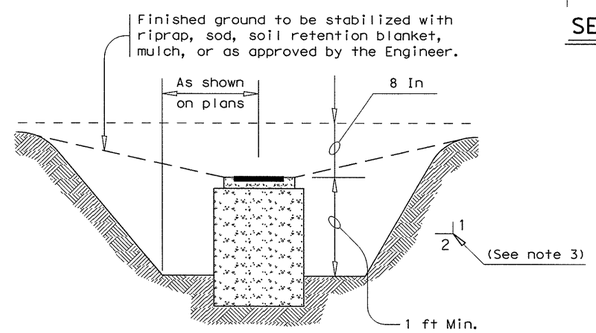

SECTION B-B

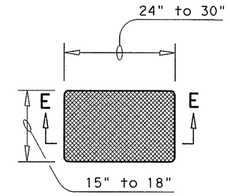

SANDBAG DETAIL

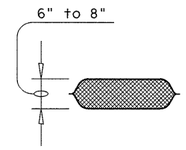

SECTION E-E

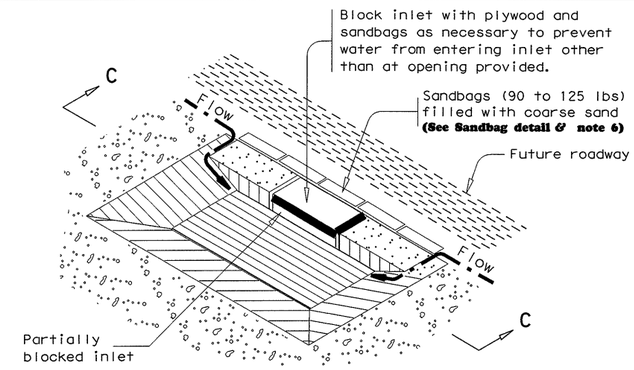

CURB INLET SEDIMENT TRAP

ST-CI

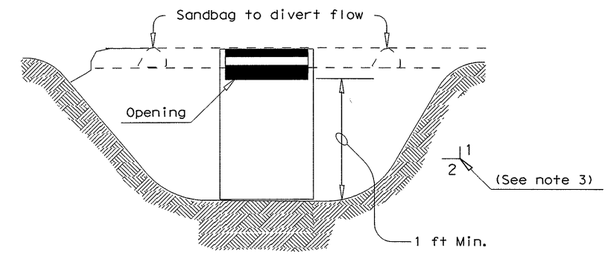

SECTION C-C

SEDIMENT BASIN & TRAP USAGE GUIDELINES

A sediment basin and/or trap may be used to precipitate sediment out of runoff draining from an unstabilized area.

Basins: The drainage area for a sediment basin should not exceed 100 acres. The basin capacity shall be at least 1800 CF/Acre of drainage area (0.5" over the drainage area). If the disturbed area draining to the basin is larger than 10 acres, the basin capacity should be 3600 CF/Acre (1.0" over the drainage area).

The basin should have a 40 hour draw-down time with an emergency spillway. The spillway may be designed to pass the peak rate of runoff from a 25 year frequency storm. The 100 year storm should be investigated to consider possible flooding impacts.

The entrance into the basin should be protected from erosion. The basin should be cleaned when the capacity has been reduced by 1/3.

Traps: The drainage area for a sediment trap should not exceed 5 acres. The trap capacity should be 1800 CF/Acre (0.5" over the drainage area).

Sediment traps should be placed in the following locations:
1. Within drainage ditches spaced @ 500'± on center
2. Immediately preceding ditch inlets
3. Just before the drainage enters a water course
4. Just before the drainage leaves the right of way

The trap outlet may either be through a perforated riser and pipe assembly designed to achieve a 40 hour draw-down time or over a level stabilized area (vegetation, rock, etc.).

The trap should be cleaned when the capacity has been reduced by 1/2 or the sediment has accumulated to a depth of 1', whichever is less.

PLANS SHEET LEGEND

ST/PO — **Sediment Basin and/or Trap with Pipe Outlet**

ST-DI — **Drop Inlet Sediment Trap**

ST-CI — **Curb Inlet Sediment Trap**

ST — **Sediment Trap with Level Stabilized Outlet**

GENERAL NOTES

1. Pipe outlet material shall conform to the Item "Pipe Underdrains" or as accepted by the Engineer.
2. All pipe connections shall be watertight.
3. Side slopes within the safety clear zone of a roadway shall be 6:1 or flatter. Protect the traveling public from inlet stacks within the clear zone.
4. Sediment basins shall have side slopes of 3:1 or flatter.
5. The dimensions and limits of excavation for sediment basins and traps will be as shown elsewhere on the plans.
6. **The sandbag material shall be made of polypropylene, polyethylene or polyamide woven fabric, min. unit weight 4 ounces/SY, Mullen burst strength exceeding 300 psi and ultraviolet stability exceeding 70%.**
7. **The guidelines shown hereon are suggestions only and may be modified by the Engineer.**

DISCLAIMER:
The use of this standard is governed by the "Texas Engineering Practice Act". No warranty of any kind is made by TxDOT for any purpose whatsoever. TxDOT assumes no responsibility for the conversion of this standard to other formats or for incorrect results or damages resulting from its use.

LEVELS DTS

Texas Department of Transportation
Design Division (Roadway)

TEMPORARY EROSION, SEDIMENT AND WATER POLLUTION CONTROL MEASURES

SEDIMENT BASINS AND TRAPS (EARTHWORK FOR EROSION CONTROL)

EC(6)-93

FILE: EC693.DGN	DN: HEJ	CK: HEJ	DW: BGD	CK:	
© TxDOT MAY 1993	DISTRICT	FEDERAL AID PROJECT			SHEET
REVISIONS	AUSTIN				707
	COUNTY		CONTROL	SECT	JOB	HIGHWAY
	WILLIAMSON		0683	06	027	SH 45 LOOP 1

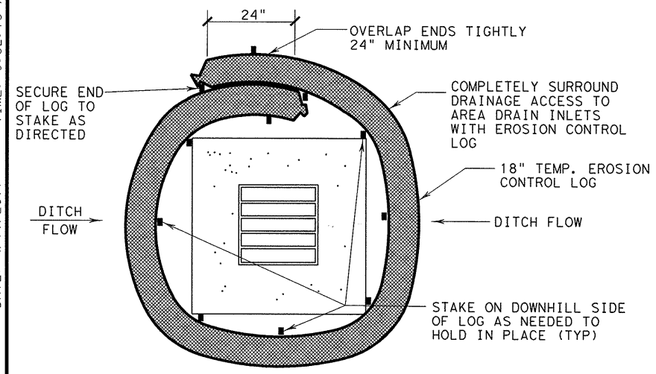

LOGS PLACED AT AREA DRAIN INLETS

NTS

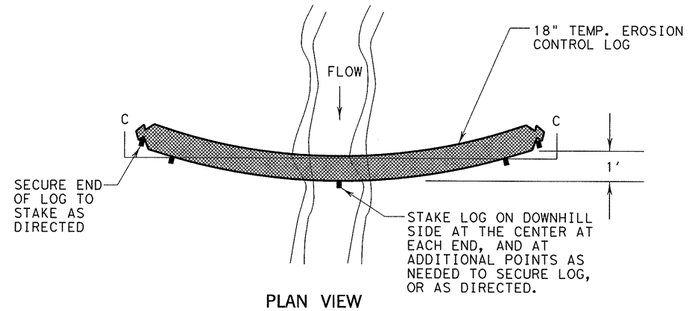

PLAN VIEW

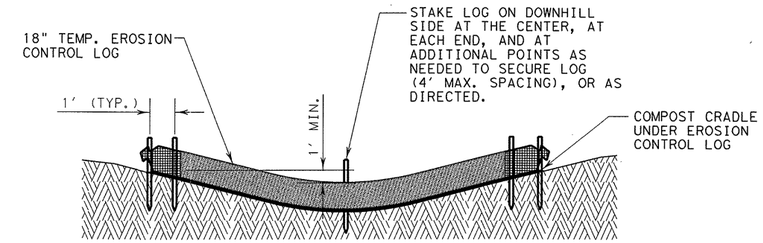

SECTION C–C

EROSION CONTROL LOG CHECK DAM

NTS

GENERAL NOTES:

1. LENGTHS OF EROSION CONTROL LOGS SHALL BE IN ACCORDANCE WITH MANUFACTURER'S RECOMMENDATIONS AND AS REQUIRED FOR THE PURPOSE INTENDED. MAXIMUM LENGTH OF LOGS SHALL BE 60' FOR 18" DIAMETER OR 30' FOR 12" DIAMETER LOGS.
2. UNLESS OTHERWISE DIRECTED, USE BIODEGRADABLE OR PHOTODEGRADABLE CONTAINMENT MESH ONLY WHERE LOG WILL REMAIN IN PLACE AS PART OF A VEGETATIVE SYSTEM. FOR TEMPORARY INSTALLATIONS, USE RECYCLABLE CONTAINMENT MESH.
3. STUFF LOGS WITH SUFFICIENT FILTER MATERIAL TO ACHIEVE DENSITY THAT WILL HOLD SHAPE WITHOUT EXCESSIVE DEFORMATION.
4. STAKES SHALL BE 2" X 2" WOOD OR #3 REBAR, 4' LONG, EMBEDDED SUCH THAT 2" PROTRUDES ABOVE LOG, OR AS DIRECTED.
5. DO NOT PLACE STAKES THROUGH CONTAINMENT MESH.

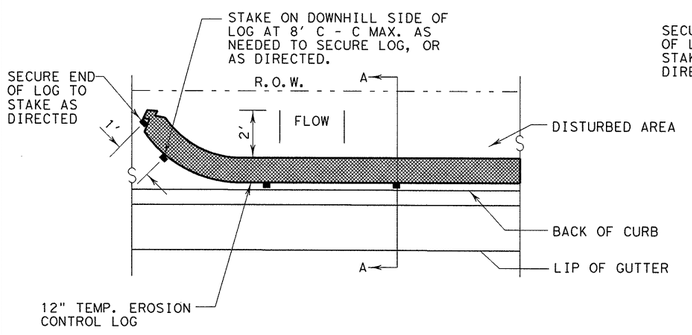

PLAN VIEW

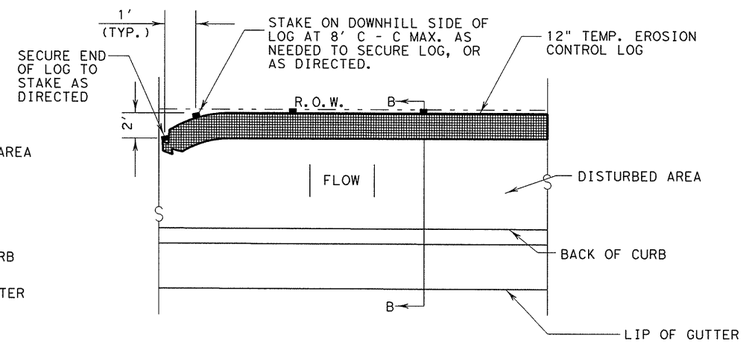

PLAN VIEW

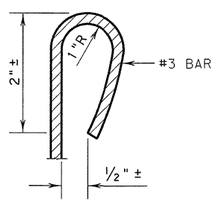

REBAR STAKE DETAIL

NTS

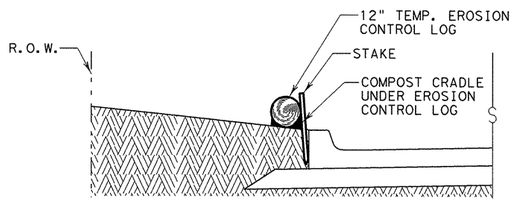

SECTION A–A

LOG PLACED AT BACK OF CURB

NTS

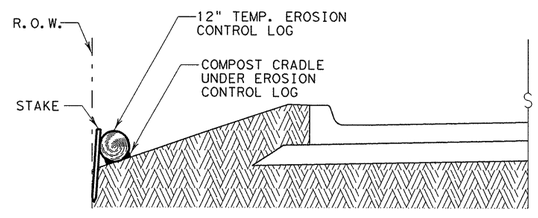

SECTION B–B

LOG PLACED AT EDGE OF RIGHT-OF-WAY

NTS

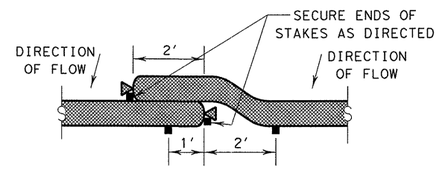

LAP DETAIL

NTS

STATE OF TEXAS
DAVID M. HARRIS
94995
LICENSED
PROFESSIONAL ENGINEER

David Harris
4/11/11

PBSJ
an Atkins company
TBPE REG. # F-474

Texas Department of Transportation
Austin District
©2011 by TxDOT

SH 45 / O'CONNOR DRIVE TEMPORARY EROSION CONTROL LOGS

TECL-04 (FW)

DESIGNED:	FED. RD DIV. No.	STATE	PROJECT No.			HIGHWAY No.	
CHECKED:	6	TEXAS				LP 1/SH 45	
DRAWN:	STATE DISTRICT	COUNTY		CONTROL No.	SECTION No.	JOB No.	SHEET No.
CHECKED:	AUSTIN	WILLIAMSON		0683	06	027	708

DATE: 4/11/2011 TIME: 9:52:13 AM

PLOT DRIVER: RD*11x17*PDF.plt
PEN TABLE: plotordr*ocon.tbl
FILE: r:\Trans-Design\o'connor\CADD\std\EC\TECLFW.DGN